CITY OF AUSTIN
AUSTIN WATER

PROJECT MANUAL
Contract Documents and Technical Specifications

VOLUME 1 of 2

Water Service Line Replacement Program
Indefinite Delivery/Indefinite Quantity

C.I.P. PROJECT NUMBER: 5309.006
IFB NUMBER: 6100 CLMC621

CITY OF AUSTIN
Austin Water
PO Box 1088
Austin, TX 78767

September 12, 2016

STATE OF TEXAS
JOSEPH O. HOEPKEN
86280
LICENSED
PROFESSIONAL ENGINEER

9/22/16

Document Number		Title

VOLUME 1

INTRODUCTORY INFORMATION

05/06/11		Title Page
09/06/16		Table of Contents

BIDDING REQUIREMENTS, CONTRACT FORMS, & CONDITIONS OF THE CONTRACT

Pre-Bid Information

00020-IDIQ	01/15/16	Invitation for Bids

Instructions to Bidders

00100	09/06/16	Instructions to Bidders

Information Available to Bidders

00220	05/06/11	Geotechnical Data

Bid Forms

00300U-IDIQ	06/01/16	Bid Form (Unit Price)

Supplements to Bid Forms

00400	06/01/16	Statement of Bidder's Experience
00405	09/25/05	Certificate of Non-Suspension or Debarment
00410	01/15/16	Statement of Bidder's Safety Experience
00440	10/19/15	Affidavit - Prohibited Activities
00475	05/11/15	Nonresident Bidder Provisions

Agreement Form

00500-IDIQ	01/15/16	Agreement

Bonds and Certificates

00610	02/23/10	Performance Bond
00620	02/23/10	Payment Bond
00630	05/11/15	Nondiscrimination Certificate
00631	03/06/14	Title VI Assurances Appendix A
00650	06/01/16	Certificate of Insurance
00670	03/20/14	Sales Tax Exemption Certificate
00680	06/05/06	Non-Use of Asbestos Affidavit (Prior to Construction)
00681	06/05/06	Non-Use of Asbestos Affidavit (After Construction)

General Conditions

00700	09/06/16	General Conditions

Supplementary Conditions

00810-IDIQ	01/15/16	Supplemental General Conditions
00810A	03/06/14	Federal Aid Assurances
00820-IDIQ	03/02/15	Modifications to Bidding Requirements and Contract Forms
00830	05/03/16	Wage Rates and Payroll Reporting
00830HH	05/03/16	Wage Rates Highway Heavy

Addenda

Document Number		Title
00900	01/15/16	Addendum

SPECIFICATIONS

Division 1 - General Requirements

01010-IDIQ	03/02/15	Summary of Work
01020-IDIQ	03/02/15	Allowances
01050	10/19/15	Grades Lines & Levels
01095	07/21/03	Reference Standards and Definitions
01200	08/09/12	Project Meetings
01300	04/22/13	Submittals
01352	04/22/13	Sustainable Construction Requirements
01353	08/09/12	Construction Equipment Emissions Reduction Plan
01380	08/09/12	Construction Photography & Videos
01500	08/09/12	Temporary Facilities
01505	04/22/13	Construction and Demolition Waste Management
01550	08/09/12	Public Safety and Convenience
01900	03/12/12	Prohibition of Asbestos Containing Materials
01900a	06/05/06	Statement of Non-Inclusion of Asbestos Containing Material (E/A Prior to Design)
01900b	06/05/06	Statement of Non-Inclusion of Asbestos Containing Material (E/A After Design)

City Standard Technical Specifications

210S	02/24/10	Flexible Base
340S	09/26/12	Hot Mix Asphaltic Concrete Pavement
430S	11/15/11	P.C. Concrete Curb and Gutter
432S	01/04/10	P.C. Concrete Sidewalk
509S	09/26/12	Excavation Safety Systems
510	10/03/13	Pipe
602S	06/16/08	Sodding for Erosion Control
628S	12/31/13	Sediment Containment Dikes
700S	09/26/12	Mobilization
803S	11/15/11	Barricades, Signs and Traffic Handling

Special Specifications

SS520	05/19/16	Water Services

Standard Details

430S-4	09/29/99	Concrete Backfill Under Curb & Gutter
432S-1	03/26/08	Sidewalk
520S-1A	08/31/11	Modified Water Service & Wastewater Service Connection Detail
520S-3	08/31/11	Double Water/Wastewater Service Connection Detail
520S-9	08/31/11	Installation Detail for Two 5/8”, ¾”, and 1” Meters
520S-9B	08/31/11	Potable HDPE Double Service Installation & 5/8”, ¾”, and 1” Meters
520S-11	08/31/11	Installation for a 5/8”, ¾”, or 1” Potable Meter
520S-11B	08/31/11	Potable HDPE Service & 5/8”, ¾”, and 1” Meter Installation
520S-13B	08/31/11	Potable HDPE Service Installation for 1-1/2” Meter Installation
628S	03/27/00	Triangular Sediment Filter Dike
1100S-2	01/04/11	Flexible Base with Asphalt Surface Trench Repair-Existing Pavement

Austin Water General Construction Notes

VOL. 2 10/09/00 **MBE/WBE Procurement Program Package**

END

Following is a summary of information for this Project. Bidder is cautioned to refer to other sections of the Project Manual, Drawings and Addenda (Bid Documents) for further details.

The City of Austin, hereafter called OWNER, is requesting sealed written Bids for furnishing all labor, materials, equipment, supervision, and incidentals, and for performing all Work required for the following Project:

Water Service Line Replacement Program, Indefinite Delivery/Indefinite Quantity

Located at: Various locations within the City of Austin's Extraterritorial Jurisdiction

CIP ID# 5309.006 IFB# 6100 CLMC621

The Work generally consists of providing the following services, including but not limited to:

Replacement of water service lines and other related improvements to the City of Austin's water distribution system.

This Contract is an Indefinite Delivery, Indefinite Quantity (IDIQ) CONTRACT. A Work Assignment will be issued to the Contractor for each specific Work Assignment location. The Work Assignment will include project location, Contract Time, engineering design, and other required documentation. The Contract Documents consist of all the applicable City of Austin standard details and specifications with the understanding that full design documents will be provided with each Work Assignment.

The CONTRACTOR is required to meet the OWNER in the field to discuss details of each potential Work Assignment. The final scope of the Work Assignment will be determined at that time and, if additional details are desired, the CONTRACTOR must request them at that time

The Contract will be for an initial 12-month term, with 3 possible 12-month extensions. Extension of the Contract will be at the mutual agreement of both the OWNER and the CONTRACTOR. If the CONTRACTOR chooses not to renew, a hold over extension of the Contract term for up to 120 calendar days may be implemented by the OWNER to allow time for re-bidding. The OWNER reserves the right not to offer an extension. Work Assignments may be issued at any time during the term of the Contract. Work Assignments not completed by the expiration date of the Contract are subject to the terms and conditions of the Contract which will continue in full force and effect.

The initial Contract Amount will not exceed one million dollars ($1,000,000) for the initial Contract Term and one million dollars ($1,000,000) for the each extension option for a total potential Contract Amount not to exceed four million dollars ($4,000,000), which may be increased subject to the availability of funding and further approval of the Austin City Council.

The CONTRACTOR will base its bid amount on the CONTRACTOR's unit prices and the estimated quantities of Work set forth in the Bid Form, which will only be used for the purpose of the comparison and evaluation of Bids. The OWNER will subsequently issue Work Assignments based on the OWNER's needs and not in accordance with the estimated quantities contained in the Bid documents up to the aggregated Contract Amount of four million dollars ($4,000,000).

Each Work Assignment must be finally completed within the Contract Time established by the OWNER for each Assignment. The OWNER will consult with the CONTRACTOR regarding the

duration of each Work Assignment, but the OWNER will have the ultimate discretion on the duration of the Assignment, which shall be reasonably determined. Work must continue through successive Working Days and approved working hours.

The unit prices bid by the successful bidder shall remain firm throughout the initial term of the Contract. Bid prices may be adjusted for Contract extensions on the basis of an increase or decrease of the existing prices upwards or downwards in accordance with the 20 City average Engineering News Record Construction Cost Index (CCI) (at the time of the notice of contract extension) divided by the current area CCI at the time of bid. The adjusted prices will be included in a change order and will remain firm throughout the Contract extension period. Upon receipt of the notice of the exercise of the option for an additional contract term by the OWNER, the CONTRACTOR must request a Bid price adjustment in writing or the then current Bid prices will remain in full force and effect. The prevailing wage rates, Section 00830, will be replaced at the time of an adjusted bid price increase with the then current prevailing wage rates.

Bid Documents are obtained through the City's Vendor Connection website, log on www.austintexas.gov/financeonline/vendor_connection/index.cfm. A complete set of Bid Documents, including all sections of the Project Manual and Drawings, are included in the attachments section of each solicitation.

All addenda and answers to Bidders questions will also be posted in the attachments section for each solicitation on the City's Vendor Connection website.

Sealed Bids will be received at the Capital Contracting Office, One Texas Center, 505 Barton Springs Rd., Suite 1045-C, Austin, Texas 78704 and then publicly opened and read aloud in the **SUITE 1045-C, Congress Conference Room**.

ALL BIDS ARE DUE PRIOR TO (Austin time) October 13, 2016 at 9:30 AM.

ALL COMPLIANCE PLANS ARE DUE PRIOR TO (Austin time) October 13, 2016 at 1:30 PM.

BIDS WILL BE OPENED AT (Austin time) October 13, 2016 at 1:30 PM.

ALL BIDS AND COMPLIANCE PLANS NOT RECEIVED PRIOR TO THE DATE AND TIME SET FORTH ABOVE WILL NOT BE ACCEPTED FOR CONSIDERATION. The time stamp clock in **SUITE 1045-C** is the time of record and is verified with www.time.gov, the official U.S. time.

All Contractors must be registered to do business with OWNER prior to Contract award. All Subcontractors must be registered with the OWNER prior to execution of a contract. Prime Contractors are responsible for ensuring that their Subcontractors are registered as vendors with the City of Austin. Registration can be done through the OWNER's on-line Vendor Registration system. Log onto https://www.ci.austin.tx.us/vss/Advantage and follow the directions.

All City procurements are subject to the City's Minority-Owned and Women-Owned Business Enterprise Procurement Program found at Chapter 2-9-A of the City Code, as amended. The Program provides Minority-Owned and Women-Owned Business Enterprises (MBEs/WBEs) or Disadvantaged Business Enterprises (DBEs) full opportunity to participate in all City contracts. Goals for MBE/WBE or DBE participation are stated for each solicitation. Information on achieving the goals or documenting good faith efforts to achieve the goals are contained in the MBE/WBE

Procurement Program Package or DBE Procurement Program Package attached to the solicitation. When goals are established, Bidders are required to complete and return the MBE/WBE or DBE Compliance Plan with their Bid. If a Compliance Plan is not submitted prior to the date and time set forth in the solicitation, the Bid will not be accepted for consideration. (See Section 00820 for MBE/WBE requirements on "no goal" solicitations.)

All Bids shall be accompanied by an acceptable Bid guaranty in an amount of not less than five percent (5%) of the total Bid, as specified in Section 00100, Instructions to Bidders.

Performance and payment bonds for the initial term of the Contract shall be executed on forms furnished by OWNER. Each bond shall be issued in an amount of one hundred percent (100%) of the not to exceed Contract Amount by a solvent surety company authorized to do business in the State of Texas, and shall meet any other requirements established by law or by OWNER pursuant to applicable law. In the event that the Contract is renewed for additional one year terms, a new bond or rider to the then existing bond in the full amount of the total not to exceed Contract Amount must be provided for the additional term(s).

Minimum insurance requirements are specified in Section 00810-IDIQ, Supplemental General Conditions. Prevailing wage rates have been established and are specified in Section 00830, Wage Rates and Payroll Reporting.

Contract Time is of the essence and all Work Assignments shall be completed within the number of days specified in the Notice to Proceed. Work under this Contract will be issued as individual Work Assignments, as defined within Supplemental General Conditions, Section 00810-IDIQ. In addition, Work to be performed is generally outlined in the Summary of Work, Section 01010-IDIQ. Work duration and designations of substantial and/or final completion will be specific to each Work Assignment. Failure by the CONTRACTOR to satisfy the substantial/final completion requirements of any Work Assignment may be cause to stop issuance of further Work Assignments. The CONTRACTOR shall note that there may be multiple individual Work Assignments active at any given time.

Work contained within individual Work Assignments will vary based on the scope of Work. An individual Work Assignment may designate a substantial and/or final completion date, after which liquidated damages will be assessed until substantial and/or final completion is achieved, in accordance with the Bid Form, Section 00300U-IDIQ.

OWNER reserves the right to reject any or all Bids and to waive any minor informality in any Bid or solicitation procedure (a minor informality is one that does not affect the competitiveness of the Bid).

A **mandatory** Pre-Bid Conference will be held on **September 21, 2016** at **1:30 PM** (Austin time) at **Waller Creek Center, 625 E. 10th Street, Room 104, Austin, Texas 78701**.
(Location)

Attendance is mandatory unless otherwise stated. Bidders must attend any mandatory Pre-Bid Conference and are encouraged to attend any non-mandatory Pre-Bid Conference to ensure their understanding of OWNER's bidding and contracting requirements, particularly MBE/WBE or DBE Procurement Program requirements. If the Pre-Bid Conference is mandatory the Bidder must arrive and sign-in within fifteen (15) minutes of the scheduled start time of the meeting, otherwise the Bidder will not be allowed to submit a Bid for the project.

The persons listed below may be contacted for information regarding the Invitation for Bid. If the

Bidder contacts any other City employee, including Council Members and members of Boards and Commissions, the Bidder may be found in violation of Ordinance No. 20111110-052, dated November 10, 2011, regarding Anti-Lobbying and Procurement. The text of that Ordinance may be viewed at http://www.cityofaustin.org/edims/document.cfm?id=161145.

AUTHORIZED CONTACT PERSONS:

PROJECT MANAGER: Joe Hoepken telephone (512) 972-1168
email joe.hoepken@austintexas.gov

CONTRACT COMPLIANCE REP.: Mary Lou Ochoa telephone (512) 974-7215
email marylou.ochoa@austintexas.gov

END

1. Preparation of Bid

a. **Bid Documents.** Each Bidder must prepare its Bid in ink on forms furnished by OWNER or as otherwise specified or permitted. Blank spaces for each item in Bid form must be filled. Bidder must submit a price for each item in Bid. In case of conflict between unit prices and extensions, unit prices shall govern. The Bid must be executed in the complete and correct legal name of individual, partnership, firm, corporation or other legal entity constituting the Bidder.

b. **Vendor Registration.** All CONTRACTORS must be registered to do business with OWNER prior to Contract Award. All Subcontractors must be registered with the OWNER prior to execution of a contract. Prime Contractors are responsible for ensuring that their Subcontractors are registered as vendors with the City of Austin. Registration can be done through the OWNER's on- line Vendor Registration system. Log onto https://www.ci.austin.tx.us/vss/Advantage and follow the directions.

c. **Pre-Bid Conference.** Unless otherwise notified, Bidders must attend the Pre-Bid Conference to ensure their understanding of OWNER's bidding and contracting requirements, particularly MBE/WBE Procurement Program requirements.

d. **Sales Tax Exemption.** The Owner is a tax-exempt organization as defined by Chapter 11 of the Property Tax Code of Texas. Bid prices shall not include sales tax on materials, supplies, or equipment that are incorporated into the real property interest of the OWNER or are otherwise completely used and consumed in the performance of the Contract. OWNER will furnish CONTRACTOR with a Sales Tax Exemption Certificate to be issued to Suppliers in lieu of the tax.

e. **Minimum Wages.** Workers on Project shall be paid not less than wage rates, including fringe benefits, as published by the Department of Labor (DOL) for Building Construction and Heavy and Highway Trades "AS APPLICABLE" and/or the $13.03 minimum wage required by City of Austin Ordinance No. 20160324-015, whichever is higher. The Total Minimum Wage required can be met using any combination of cash and non-cash qualified fringe benefits provided the cash component meets or exceeds the $13.03 minimum wage required.

f. **Addenda.** Bidder shall be knowledgeable of all Addenda issued and shall acknowledge all Addenda in spaces provided on Bid form. Further information regarding the Bid documents and the Project may be obtained from the Project Manager listed at the end of Section 00020, Invitation for Bids.

g. **Required Items.** Bids must include all specified items in this section and be submitted in accordance with paragraph No. 7 below. Any additional requirement to the bid submittal is specified in Section 00820. Any corrections to a Bid shall be initialed by the person signing the Bid.

h. **Professional Services.** Bidders must secure any required professional services that are defined as professional services under the Professional Services Procurement Act, Chapter 2254 of the Texas Government Code (for example: registered professional land surveyors and professional engineers) using the qualifications based selection process prescribed by that chapter. (Note: It is a violation of State Law to solicit Bids for professional services.)

i. **Further Information.** Prospective Bidders desiring further information or

interpretation of Project Manual or Drawings must make a written request for such information to OWNER addressed to the Authorized Contact Person listed in Section 00020 no later than seven (7) Working Days before Bid opening. Interpretation of Project Manual or Drawings will be made by Addendum only and a copy of each Addendum will be provided to each person to whom a set of Bid Documents has been furnished. Any verbal communications will not be binding on the OWNER.

j. **Anti-Lobbying and Procurement.** Article 6, Chapter 2-7, Austin City Code, prohibits lobbying activities or representations by the Bidder between the date that the Invitation for Bid (IFB) is issued and the date of contract execution. The text of the pertinent City Ordinance may be viewed at http://www.cityofaustin.org/edims/document.cfm?id=161145.

(1) Definitions

(A) "Agent" means a person authorized by a bidder to act for or in place of bidder, including a person acting at the request of bidder, a person acting with the knowledge and consent of a bidder, or a person acting with any arrangement, coordination, or direction between the person and the bidder.

(B) "Authorized Contact Person" means the Project Manager listed in Section 00020, IFB, or other persons specifically identified in the IFB as the contact regarding the solicitation, or the authorized contact person's designee during the course of the no-contact period.

(C) "City Employee" means a person employed by the City.

(D) "City Official" is defined in Section 2-7-2 of the City Code.

(E) "No-Contact Period" means the period of time from the date the IFB is issued until a contract is executed. If the City withdraws the IFB or rejects all bids with the stated intention to reissue the same or a similar IFB for the same or similar project, the no-contact period continues during the time period between the withdrawal and reissue.

(F) "Response" means a bid.

(G) "Respondent" means a bidder. The term "respondent" also includes:

(i) an owner, board member, officer, employee, contractor, subsidiary, joint enterprise, partnership, agent, lobbyist, or other representative of a bidder;

(ii) a person or representative of a person that is involved in a joint venture with the bidder, or a subcontractor in connection with the bidder's bid; and

(iii) a bidder who has withdrawn a bid or who has had a bid rejected or disqualified by the City.

(H) "Representation" means a communication related to a bid to a council member, official, employee, or City representative that is intended to or that is reasonably likely to:

(i) provide information about the bid;

(ii) advance the interests of the bidder;

(iii) discredit the bid of another bidder;

(iv) encourage the City to withdraw the IFB;

(v) encourage the City to reject all of the bids;

(vi) convey a complaint about a particular bid; or

(vii) directly or indirectly ask, influence, or persuade any City official, City employee, or body to favor or oppose, recommend

or not recommend, vote for or against, consider or not consider, or take action or refrain from taking action on any vote, decision, or agenda item regarding the solicitation.

(I) "Solicitation" means an opportunity to compete to conduct business with the City that requires City Council approval under City Charter Article VII Section 15 (Purchase Procedure).

(J) "City" means Owner.

(2) Restriction on Contacts.

(A) During a no-contact period, a bidder shall make a representation only through the authorized contact person.

(B) During the no-contact period, a bidder may not make a representation to a City official or to a City employee other than to the authorized contact person. This prohibition also applies to a vendor that makes a representation and then becomes a bidder.

(C) The prohibition of a representation during the no-contact period applies to a representation initiated by a bidder, and to a representation made in response to a communication initiated by a City official or a City employee other than the authorized contact person.

(D) If the City withdraws an IFB or rejects all bids with a stated intention to reissue the same or similar IFB for the same or similar project, the no-contact period shall expire after the ninetieth day after the date the IFB is withdrawn or all bids are rejected if the IFB has not been reissued during the ninety day period.

(E) The no-contact period shall expire when the first of the following occurs: contract is executed or solicitation is cancelled.

(F) The purchasing officer or the Capital Contracting Office Director may allow bidders to make representations to city employees or city representatives in addition to the authorized contact person for a solicitation that the purchasing officer or the Capital Contracting Office Director finds must be conducted in an expedited manner; an expedited solicitation is one conducted for reasons of health or safety under the shortest schedule possible with no extensions. The purchasing officer's or Capital Contracting Office Director's finding and additional city employees or city representatives who may be contacted must be included in the solicitation documents.

(G) Representations to an independent contractor hired by the City to conduct or assist with a solicitation will be treated as representations to a City employee.

(H) A current employee, director, officer, or member of a bidder, or a person related within the first degree of consanguinity or affinity to a current employee, director, officer or member of a bidder, is presumed to be an agent of the bidder for purposes of making a representation. This presumption is rebuttable by a preponderance of the evidence as determined by the purchasing officer or Capital Contracting Office Director.

(I) A bidder's representative is a person or entity acting on a bidder's behalf with the bidder's request and consent. For example, a bidder may email their membership list and ask members to contact council members on the bidder's behalf. The members are then acting per bidder's request and with their consent, and the members have become bidder representatives.

(3) Permitted Representations

(A) If City seeks additional information from bidder, the bidder shall submit the

representation in writing only to the authorized contact person. The authorized contact person will then distribute the written representation in accordance with the terms of the IFB. A bidder cannot amend or add information to a bid after the bid deadline.

(B) If bidder wishes to send a complaint to the City, the bidder shall submit the complaint in writing only to the authorized contact person. The authorized contact person will then distribute a complaint regarding the process to members of the city council or members of the City board, to the Capital Contracting Office Director, and to all bidders on the IFB. However, the Capital Contracting Office Director or purchasing officer shall not permit distribution of any complaint that promotes or disparages the qualifications of a bidder, or that amends or adds information to a bid. A determination of what constitutes promoting or disparaging the qualifications of a bidder or constitutes amending or adding information is at the Capital Contracting Office Director's or purchasing officer's sole discretion. Bid protests are not subject to this subsection. Documents related to a bid protest may not be forwarded to council under this subsection.

(C) If a bidder submits a written inquiry regarding an IFB, the authorized contact person will provide a written answer and distribute both the inquiry and answer to all bidders on the IFB.

(D) If a bidder does not receive a response from the authorized contact person, the bidder may contact the Capital Contracting Office Director or purchasing officer as appropriate.

(E) A bidder may ask a purely procedural question, for example a question regarding the time or location of an event, or where information may be obtained, of a City employee other than the authorized contact person. This provision does not permit a bidder to make suggestions or complaints about the contract process that constitute a representation to a City employee other than the authorized contact person. Notwithstanding this provision, a bidder may not ask a procedural question of a councilmember, a councilmember's aide, or of a City board member except in a meeting held under the Texas Government Code, Chapter 551 (Open Meetings Act).

(F) Article 6 of the City Code allows representations:

(i) made at a meeting convened by the authorized contact person, including meetings to evaluate bids or negotiate a contract;

(ii) required by Financial Services Department protest procedures for vendors;

(iii) made at a Financial Services Department protest hearing;

(iv) provided to the Small & Minority Business Resources Department in order to obtain compliance with Chapter 2-9A-D (the Minority-Owned and Women-Owned Business Enterprise Procurement Program);

(v) made to the City Risk Management coordinator about insurance requirements for a bid;

(vi) made in public at a meeting held under the Texas Open Meetings Act; or

(vii) made from a bidder's attorney to an attorney in the Law Department in compliance with Texas Disciplinary Rules of Professional Conduct.

(G) Communication regarding the solicitation is permitted between or among City officials or City employees acting in their official capacity.

(H) A contribution or expenditure as defined in Chapter 2-2 (Campaign Finance)

is not a representation.

(4) Contract Voidable.

If a contract is awarded to a bidder who has violated these Anti- Lobbying & Procurement provisions, the contract is voidable by the Owner.

(5) Debarment.

If a bidder has been disqualified under these provisions more than two times in a sixty month period, the purchasing officer shall debar the bidder from bidding for a period not to exceed three years, provided the bidder is given written notice and a hearing in advance of the debarment.

k. **City's Minority-Owned and Women-Owned Business Enterprise / Disadvantaged Business Enterprise (MBE/WBE or DBE) Program Requirements. Good Faith Efforts.** When a bidder cannot achieve the MBE/WBE or DBE goals or subgoals established for the project, the bidder must document its Good Faith Efforts to meet the goals or subgoals. Good Faith Effort evaluations will consider, at a minimum, the bidder's efforts to do the following:

(1) Soliciting through at least two reasonable, available and verifiable means MBEs/WBEs within the Significant Local Business Presence boundaries at least seven (7) business days prior to the bid opening date to allow the MBEs/WBEs or DBEs to respond to the bid.

(2) Providing interested MBEs/WBEs or DBEs adequate information about the bid documents and requirements, including addenda, in a timely manner to assist them in responding to the bid.

(3) Negotiating in good faith with interested MBEs/WBEs DBEs that have submitted bids to the bidder.

(4) Publishing notice in a local publication such as a newspaper, trade association publication or via electronic/social media.

(5) Not rejecting MBEs/WBEs or DBEs as being unqualified without sound reasons based on a thorough investigation of their capabilities.

(6) Making economically feasible portions of the work available to MBE/WBE or DBE subcontractors and suppliers and to select those portions of the work or material needs consistent with the available MBE/WBE or DBE subcontractors and suppliers, so as to facilitate meeting the goals or subgoals.

(7) The ability or desire of the bidder to perform the project work with its own organization does not relieve the bidder of the responsibility to make Good Faith Efforts.

(8) Bidders are not required to accept higher quotes in order to meet the goals or subgoals.

(9) Effectively using the services of Minority Person/Women community organizations; Minority Person/Women Contractors groups; local, state and federal Minority Person/Women business assistance offices; and other organizations to provide assistance in solicitation and utilization of MBEs, WBEs and/or DBEs.

(10) In assessing minimum Good Faith Efforts, the OWNER may consider (1) whether the bidder sought guidance from the City of Austin Small and Minority Business Resources Department (SMBR) on any question regarding compliance with these requirements; and (2) the performance of other bidders in meeting the goals.

For additional information, refer to the MBE/WBE or DBE Compliance Program Requirements Volume of the Project Manual.

Bid shopping is not allowed in conjunction with this solicitation and may result in the disqualification of prospective bidders and subcontractors.

2. Estimates of Quantities (Unit Price Contracts Only)

Quantities listed in unit price Bid form are to be considered approximate quantities and will be used only for comparison of Bids. Payment to CONTRACTOR will be made only for actual quantities of Work performed or materials furnished in accordance with Contract and it is understood that quantities may be increased or decreased as provided in Section 00700, General Conditions, and as may be modified by Section 00810, Supplemental General Conditions.

3. Drawings, Project Manual and Site (s) of Work

Before submitting a Bid, the Bidder shall carefully examine the Bid Documents, site(s) of the proposed Work, soils, and other conditions that may affect the performance of the Work to satisfy the Bidder as to character, quality and quantities of Work to be performed and materials to be furnished. By submitting a Bid, the Bidder will be deemed to have certified that the Bidder has complied with these requirements. If, during preparation of the Bid, the Bidder discovers any suspected discrepancies or errors, the Bidder must immediately notify the Authorized Contact Person in writing of the suspected discrepancy or error. Failure to provide written notice of any suspected discrepancies or errors may be cause for rejection of the Bid.

4. Bid Guaranty

All Bids shall be accompanied by a Bid guaranty in an amount of not less than five percent (5%) of the total Bid. If the total Bid amount is $100,000 or less, Bidder has the option of providing a cashier's or certified check, made payable to City of Austin accompanied by a letter from a surety company indicating that Bidder can be bonded for the amount of the Project, or a Bid bond with Power of Attorney attached, issued by a solvent surety authorized under laws of the State of Texas and acceptable to OWNER. If the total Bid amount exceeds $100,000, the only acceptable Bid guaranty will be a Bid bond with Power of Attorney attached, issued by a solvent surety authorized under laws of the State of Texas and acceptable to OWNER.

The Bid guaranty accompanying the Bid of the three (3) apparent low Bidders will be retained until Contract is awarded and successful Bidder executes Contract and furnishes required bonds and insurance, after which Bid guaranty will be returned to the Bidders. All other Bid guaranties will be returned after Bid certification. In the event that the Bidder to whom the Contract is awarded fails to timely execute the Contract, the Bidder agrees that the OWNER in its discretion may rescind the initial award and award the Contract to the next lowest responsible Bidder.

5. Performance and Payment Bonds

When performance and/or payment bonds are required, each shall be issued in an amount equal to the Contract Amount as security for the faithful performance and/or payment of all Contractor's obligations under the Contract Documents. Performance and payment bonds shall be issued by a solvent corporate surety authorized to do business in the State of Texas, and shall meet any other requirements established by law or by OWNER pursuant to applicable law.

6. Consideration of Bid Amount

For purpose of award, after Bids are opened, read aloud, reviewed, and certified, the total

amount of the Bid, including accepted Bid alternates, will be considered the amount of the Bid. Upon request, certified Bid tabulations will be made available to the public. OWNER reserves the right to reject any or all Bids and to waive any minor informality in any Bid or solicitation procedure (a minor informality is one that does not affect the competitiveness of the Bids).

7. Submission of Bid

Each Bid must be completed and signed by person(s) authorized to bind individual, partnership, firm, corporation, or any other legal entity submitting the Bid, and, shall include the following in one envelope furnished by OWNER:

(a) One copy of Bid form (Section 00300L or 00300U) completed and signed.
(b) Acknowledgment of receipt of Addenda issued in spaces provided in Bid form.
(c) Required Bid guaranty.
(d) Copy of statement of legal entity status, as applicable, including but not limited to, as applicable, Statement of Sole Proprietorship, Articles of Partnership or Incorporation and resolution, or corporate board minutes, empowering signatory to bind Bidder, attested to by an officer of Bidder. The required information is set forth in Section 00100, Paragraph 15.
(e) One copy of the Insurance Cost Form (Section 00425A), completed and signed (ROCIP projects only).
(f) One copy of the Affidavit - Prohibited Activities (Section 00440), completed and signed.
(g) One copy of the Nonresident Bidder Provisions (Section 00475), completed and signed.
(h) One copy of the Nondiscrimination Certificate (Section 00630), completed and signed.
(i) Required information indicated in Drawings or Project Manual.

Bid must be accompanied by a MBE/WBE or DBE Compliance Plan, signed by the authorized representative described above. Compliance Plans should be submitted separately, in a second envelope, prior to the date and time set forth in Section 00020, Invitation for Bids. The Compliance Plan forms are included in the MBE/WBE Procurement Program Package or DBE Procurement Program Package (a separately bound volume).

Bid shall include all specified items in this section and be placed in a sealed envelope, clearly identified on outside as a Bid to OWNER, with Bidder's name and address, project name, bid due date/time, signed acknowledgement of the number of Addenda received and authorized signature. Failure to submit Bid appropriately may subject Bidder to disqualification. Bid may be mailed or delivered (in person or by Federal Express, Express Mail or other delivery service) to:

City of Austin
Capital Contracting Office
One Texas Center
505 Barton Springs Rd.
Suite 1045-C
Austin, Texas 78704

When sent by mail, Federal Express, Express Mail, or other delivery service, sealed Bid (marked as indicated above) shall be enclosed in an additional envelope, or other appropriate packaging, clearly identified on outside as a Bid to OWNER with Bidder's name and address, Project name, and Bid date and time. It is the sole responsibility of the Bidder to ensure timely delivery of Bid. OWNER will not be responsible for failure of

service on the part of the U.S. Post Office, courier services, or any other form of delivery service chosen by the Bidder. (See Section 00820, Modifications to Bidding Requirements and Contract Forms, for modifications to solicitations without MBE/WBE or DBE goals.)

In submitting its Bid, Bidder certifies that it has not lobbied the City or its officials, managers, employees, consultants, or contractors in such a manner as to influence or to attempt to influence the bidding process. In the event it reasonably appears that the Bidder influenced or attempted to influence the bidding process, the City may, in its discretion, reject the Bid.

8. Withdrawal of Bid

A Bid may be withdrawn by a Bidder, provided an authorized individual of the Bidder submits a written request to withdraw the Bid prior to the time set for opening the Bids.

9. Rejection of Bids

A. The following **will** be cause to reject a Bid:

(1) Failure to submit Section 00300 (Bid Form) and signed by an individual empowered to bind the Bidder.

(2) Bids which are not accompanied by acceptable Bid guaranty, with Power of Attorney attached, or a letter certifying the Bidder's ability to be bonded, from a surety company, in accordance with Paragraph 4 above.

(3) More than one Bid for same Work from an individual, firm, partnership or corporation.

(4) Evidence of collusion among Bidders.

(5) Sworn testimony or discovery in pending litigation with OWNER which discloses misconduct or willful refusal by contractor to comply with subject contract or instructions of OWNER.

(6) Failure to submit MBE/WBE or DBE Compliance Plan in accordance with the separately bound volume titled MBE/WBE Procurement Program Package or DBE Procurement Program Package.

(7) Failure to have an authorized agent of the Bidder attend the mandatory Pre- Bid Conference, if applicable.

(8) Bids received from a Bidder who has been debarred or suspended by OWNER's Purchasing Officer.

(9) Bids received from a Bidder when Bidder or principals are currently debarred or suspended by Federal, State or City governmental agencies. (Applicable for Bid amounts equal to or in excess of $25,000.00).

(10) Failure to submit any of the items specified above in paragraph 7, "Submission of Bid".

B. The following **may** be cause to reject a Bid:

(1) Poor performance in execution of work under a previous City of Austin contract.

(2) Failure to achieve reasonable progress on an existing City of Austin

contract.

(3) Default on previous contracts or failure to execute Contract after award.

(4) Evidence of failure to pay Subcontractors, Suppliers or employees in accordance with Contract requirements.

(5) Bids containing omissions, alterations of form, additions, qualifications or conditions not called for by OWNER, or incomplete Bids may be rejected. In any case of ambiguity or lack of clarity in the Bid, OWNER reserves right to determine most advantageous Bid or to reject the Bid.

(6) Failure to acknowledge receipt of Addenda.

(7) Failure to submit any of the items specified below in paragraph 11, "Submission of Post Bid Information".

(8) Failure to identify a dollar amount (price) of a unit price(s) in the 00300U including all Bid Alternates in the Bid Form 00300U or 00300L

(9) Failure to submit post-Bid information within the allotted time(s) (see paragraph 11 for post-Bid requirements)

(10) Failure to timely execute Contract after award.

(11) Previous environmental violations resulting in fines or citations by a governmental entity (i.e. U.S. Environmental Protection Agency, Texas Commission on Environmental Quality, etc.).

(12) Safety record as set forth in Section 00410, Statement of Bidder's Safety Experience.

(13) Failure of Bidder to demonstrate the minimum experience required as specified in Section 00400 if that Section is included in the bidding documents.

(14) Evidence of Bidder's lack of sufficient resources, workforce, equipment or supervision, if required by inclusion of appropriate attachments in Section 00400.

(15) Evidence of poor performance on previous Projects as documented in Owner's project performance evaluations.

(16) Unbalanced Unit Price Bid: "Unbalanced Bid" means a Bid, which includes a Bid that is based on unit prices which are significantly less than cost for some Bid items and significantly more than cost for others. This may be evidenced by submission of unit price Bid items where the cost are significantly higher/lower than the cost of the same Bid items submitted by other Bidders on the project.

10. Protest Procedures

The OWNER's Capital Contracting Office Director has the authority to settle or resolve any claim of an alleged deficiency or protest. The procedures for notifying OWNER of an alleged deficiency or filing a protest are listed below. If you fail to comply with any of these requirements, the Capital Contracting Office Director may dismiss your complaint or protest.

Prior to Bid opening: If you are a prospective Bidder and you become aware of the facts

regarding what you believe is a deficiency in the solicitation process before the Bid is opened, you must notify OWNER in writing of the alleged deficiency before that date, giving OWNER an opportunity to resolve the situation prior to the Bid opening.

After Bid opening: If you submit a Bid to OWNER and (1) you have been found non-responsive, or
(2) you believe that there has been a deficiency in the solicitation process or the award, you have the opportunity to protest the solicitation process or the recommended award as follows:

1. You must file written notice of your intent to protest within four (4) calendar days of the date that you know or should have known of the facts relating to the protest. If you do not file a written notice of intent within this time, you have waived all rights to protest the solicitation process or the award.
2. You must file your written protest within fourteen (14) calendar days of the date that you know or should have known of the facts relating to the protest unless you know of the facts before the Bid has been opened. If you know of the facts before that date, you must notify OWNER as stated above.
3. You must submit your protest in writing and must include the following information:
    a. your name, address, telephone, and email address;
    b. the solicitation number and the CIP number, if applicable;
    c. a detailed statement of the factual grounds for the protest, including copies of any relevant documents.
4. Your protest must be concise and presented logically and factually to help with OWNER's review.
5. When OWNER receives a timely written protest, the Capital Contracting Office Director will determine whether the grounds for your protest are sufficient. If the Capital Contracting Office Director decides that the grounds are sufficient, the Capital Contracting Office will schedule a protest hearing, usually within five (5) working days. If the Capital Contracting Office Director determines that your grounds are insufficient, you will be notified of that decision in writing.
6. The protest hearing is informal and is not subject to the Open Meetings Act. The purpose of the hearing is to give you a chance to present your case; it is not an adversarial proceeding. Those who may attend from OWNER are: representatives from the department that requested the purchase, the Law Department, the Capital Contracting Office, and other appropriate City staff. You may bring a representative or anyone else that will present information to support the factual grounds for your protest with you to the hearing.
7. A decision will usually be made within fifteen (15) calendar days after the hearing.
8. The Capital Contracting Office Director will send you a copy of the hearing decision after the appropriate City staff has reviewed the decision.
9. When a protest is filed, OWNER usually will not make an award until a decision on the protest is made. However, OWNER will not delay an award if the City Manager or the Capital Contracting Office Director determines that:
    a. OWNER urgently requires the supplies or services to be purchased, or
    b. Failure to make an award promptly will unduly delay delivery or performance.

In those instances, the Capital Contracting Office will notify you and make every effort to

resolve your protest before the award.

The protest or notice of intent and the protest shall be submitted in writing to the following address:

City of Austin
Capital Contracting Office
ATTN: Capital Contracting Officer
One Texas Center
505 Barton Springs Rd.
Suite 1045-A
Austin, Texas 78704
PHONE: 512/974-7141

11. Submission of Post Bid Information

Prior to determination of the certified low Bidder, the three (3) apparent low Bidders must submit to OWNER the following information within three (3) business days of receipt of notice of apparent low Bidder status by the OWNER:

1. One copy of Attachments A-I and any other specifically designated Attachments of the Statement of Bidder's Experience (Section 00400), completed and signed. (Unless provided to the contrary in Section 00820 Modifications to Bidding Requirements and Contract Forms).
2. One Copy of the Certificate of Non-Suspension or Debarment (Section 00405), completed and signed. (Applicable for Bid amounts equal to or in excess of $25,000.00.)
3. One copy of Section 00410, Statement of Bidder's Safety Experience, including required attachments, completed and signed.
4. One copy of the Title VI Assurances Appendix A (Section 00631), completed and signed.
5. One copy of Exhibit A Federal Provisions (Section 00810A, pages 1-9) completed and signed. (Federal projects only)
6. Such other information as is required to evaluate Bid or Bidder.

Upon notification of status as certified low Bidder, Bidder shall submit the following information to OWNER within three (3) business days:

1. Letter(s) of intent between Bidder and all subcontractor(s) and all supplier(s) identified in the MBE/WBE Compliance Plan.
2. Section 00425B, VII Subcontractor Affidavit of Receipt and Provision of ROCIP Information (for Subcontractor(s) of all tiers identified in the MBE/WBE Compliance Plan). For ROCIP projects.
3. Such other information as required. (Note: OWNER reserves the right to solely determine whether the comparable experience documentation provided by the Bidder is sufficient and relevant to the Work described in the Contract Documents for the Bidder to be considered a responsible Bidder. In addition, the Bidder acknowledges and agrees that the failure to timely provide the additional information required by this section will result in a determination that, for the purposes of this solicitation, the Bidder has not provided sufficient information for the OWNER to be able to determine that the Bidder is a responsible Bidder.)

12. Award and Execution of Contract

OWNER will process Bids expeditiously. Award of Contract will be to the lowest, responsible Bidder meeting all requirements of the Bid Documents. OWNER may not award Contract to a nonresident Bidder unless the nonresident underbids the lowest Bid submitted by a responsible resident Bidder by an amount that is not less than the amount by which a resident Bidder would be required to underbid the nonresident Bidder to obtain a comparable contract in the state in which the nonresident's principal place of business is located.

Award of Contract will occur within the period identified on the Bid form, unless mutually agreed between the parties. Capital Contracting Office Director shall submit recommendation for award to the City Council for those project awards requiring City Council action. Contract will be signed by City Manager or his/her designee after award and submission of required documentation by Bidder. Contract will not be binding upon OWNER until it has been executed by both parties. OWNER will process the Contract expeditiously. However, OWNER will not be liable for any delays prior to the award or execution of Contract.

Upon contract award, the selected Bidder must submit either their existing or an updated personnel policy (on letterhead) documenting conformity with City Code, Chapter 5-4, § 5-4-2. If the company does not submit a copy of their personnel policy incorporating the non-discrimination policy, the City of Austin Nondiscrimination Policy (Section 00630) will be considered the Bidder's nondiscrimination policy.

In any case of ambiguity or lack of clarity in the Bid, OWNER reserves the right to determine the most advantageous Bid or to reject the Bid.

Notwithstanding anything in this Section 00100 to the contrary, the OWNER may award a contract for construction services in an amount of less than $100,000 to a bidder whose principal place of business is in the City of Austin and whose bid is within 5% of the lowest bid price received from a bidder whose principal place of business is not within the City of Austin, if the City finds that the local bidder offers the City the best combination of contract price and additional economic development opportunities for the City created by the contract award including the employment of resident of the City and increased tax revenues to the City.

13. Partnering

In order to complete the Work in a manner that is most beneficial to the OWNER and CONTRACTOR, OWNER and CONTRACTOR may form a "Partnering Team", which will include the E/A, and any major Subcontractors. This partnering relationship will draw on the strength of all parties to identify and achieve mutual goals. The objectives of this partnering relationship are effective and efficient communication and Contract performance, which is intended to ensure that the Project is completed within budget, on schedule, and in accordance with the Drawings and Specifications and other Contract requirements. While the partnering relationship will be multilateral in makeup and participation will be totally voluntary, the OWNER and CONTRACTOR agree to cooperate and use reasonable good faith efforts to discuss and resolve any and all Project issues and disputes. Section 01100, Special Project Procedures and/or Section 01200, Project Meetings contain additional information regarding the intent of the partnering relationship and responsibilities of the entities entering into the partnering charter.

14. ROCIP Requirements

If the insurance on this Project will be under the Rolling Owner Controlled Insurance Program (ROCIP), the Bidder is directed to Section 00810, Supplemental General Conditions, Section 00820, Modifications to Bidding Requirements and Contract Forms, and the Project Safety Manual included with these contract documents for information and bidding requirements.

The Insurance Cost Form, Section 00425A, Rolling Owner Controlled Insurance Program Information Section 00425B, VI Contractor Affidavit of Receipt and Provision of ROCIP Information must be accurately completed and submitted with the Bid to indicate insurance removed from Base Bid and Alternates. CONTRACTOR shall remove from the Bid the cost of insurance for the CONTRACTOR and Subcontractors of all tiers working on site.

The Statement of Bidder's Safety Experience, Section 00410, must be accurately completed and submitted with the Bid.

The Rolling Owner Controlled Insurance Program Information, Section 00425 B, VII Subcontractor Affidavit of Receipt and Provision of ROCIP Information for subcontractor(s) of all tiers identified in the MBE/WBE Compliance Plan must be accurately completed and submitted as a post bid submittal and further Subcontractor Affidavits must be submitted throughout the duration of the Contract as Subcontractor(s) are added.

15. Signature Requirements

The Bid and any subsequent supporting Bid documents and Contract must be executed in the Bidder's full name and legal entity status by an authorized representative of the Bidder and accompanied by sufficient documentation, which clearly indicates not only the legal name and entity status of Bidder, but also the capacity and authority of the person signing on behalf of Bidder. Accordingly, a partnership/joint venture must file its partnership/joint venture agreement, a corporation must file its articles and bylaws, a limited liability company must file its certificate of organization and article of organization and regulations, and a limited partnership must file not only limited partnership agreement and the certificate of limited partnership, but also the documentation for its general partner, and any Bidder must file a copy of any assumed name certificate, or such limited portion of such documents reasonably establishing signature authority.

The following samples show the entity information and signature requirements that will apply to all Bid and contract execution documents for the type of entity indicated:

1. Individual/Sole Proprietor (sample)

   The individual/sole proprietor must sign the document in his or her personal capacity or in any assumed name capacity accompanied by a copy of any assumed name certificate.

   Name of Contractor (d/b/a, if appropriate), a sole

   proprietor By: _____

   Printed Name:_____

2. Partnership/Joint Venture (sample)

   A partner/joint venturer must sign the document in his or her capacity as a partner/joint venturer and in any assumed name capacity accompanied by a copy of the assumed name certificate, if any, and a copy of the partnership or joint venture agreement, as applicable, with additional documentation, if

necessary, establishing the authority of the signatory individual.

Name of Partnership/Joint Venture, a Texas Partnership/JV, as appropriate By: _____

Printed or Typed Name: _____

Title:_____(Partner, managing partner, venturer, managing venturer, as approp.)
Authorized Representative

3. Corporation (sample)

An authorized officer or agent of the corporation must sign the documents on behalf of the corporation in his or her capacity as the authorized representative of the corporation accompanied by a copy of a corporate resolution and minutes granting such authority with a certificate of an officer of the corporation as to the authority of the signatory to bind the CONTRACTOR signed and dated no more than one week before the date of execution of the document.

Name of Contractor, Inc. or Co., a Texas corporation, as appropriate By: _____

Printed or Typed Name: _____

Title:_____(Officer or Agent (as appropriate)) Authorized Representative

4. Limited Liability Company (sample)

An authorized manager or member of the LLC must sign the document in his or her capacity as a manager or member accompanied by a copy of the LLC's certificate of organization and articles of organization and regulations evidencing such person's signatory authority.

Name of Contractor, L.L.C., a Texas limited liability company, as appropriate By:_____,

Printed or Typed Name:_____

Title:_____, (Manager or Member (as appropriate)) Authorized Representative

5. Limited Partnership (sample)

The general partner of a limited partnership must execute the documents on behalf of the limited partnership, accompanied by copy of the limited partnership agreement and the certificate of limited partnership. In addition, the signatory must sign the documents in his or her capacity as an authorized officer or agent of the corporation or member or manager of the LLC, as appropriate, accompanied by a copy of the corporate or LLC documentation stipulated above.

Name of Contractor, Ltd., a Texas limited partnership, as appropriate By: Name of General Partner (usually a Texas corporation or an L.L.C.) By: _____

Printed or Typed Name:_____

Title:_____Officer or Agent of Corporation or LLC Authorized Representative

16. Contractor Evaluation

The Owner will review and evaluate the Contractor's Work and performance on the Project and provide the Contractor with a written Contractor Evaluation Report in accordance with City of Austin Administrative Rule R161-13.37. Rule R161-13.37 provides an appeal process.

http://www.austintexas.gov/department/contract-management

17. Texas Ethics Commission Certificate of Interested Parties Disclosure Form

(1) Definitions:

(A) "Interested Party" – means a person who has a controlling interest in a Business Entity with whom the Owner contacts or who actively participates in facilitating the Contract or negotiating the terms of the Contract, including a broker, intermediary, adviser, or attorney for the Business Entity.

(B) "Business Entity" – means any entity recognized by law through which business is conducted, including a sole proprietorship, partnership, or corporation.

(2) As a condition to entering the Contract, the Business Entity constituting the successful Bidder must provide a Texas Ethics Commission Certificate of Interested Parties Form to the Owner at the time the Business Entity/Bidder submits the signed Contract to the Owner in full compliance with the following requirements under which the successful Bidder shall:

(i) go to the Ethics Commission's website (www.ethics.state.tx.us),

(ii) complete the "Interested Parties" information, in accordance with the requirements of the Texas Ethics Commission Rules published at Title 1, Part 2, Chapter 46, of the Texas Administrative Code and available on the referenced website,

(iii) include the City's contract identification number,

(iv) include a short description of the goods or services to be used by the City, and

(v) indicate whether each interested party has a controlling interest in the business entity, is an intermediary in the contract for which the disclosure is being filed, or both.

(3) In accordance with the Commission Rules, the Certificate of Filing and completed Certificate of Interested Parties must be (i) printed, (ii) signed by an authorized agent of the business entity, and (iii) submitted to the City at the time of the submission of the signed contract to the City. The City then must notify the Ethics Commission in electronic format of receipt of the document within 30 days of contracting and the Commission will make the disclosure of interested parties available to the public on its website.

End

Geotechnical Data
Section 00220

Depending on Project requirements, OWNER may have obtained geotechnical information, which may include laboratory test results and logs of borings from geotechnical consultants. That information will be included in this section and/or on the Drawings. The CONTRACTOR shall be familiar with the subsurface materials and conditions on the Project and shall be knowledgeable of how they will affect the Work. The following is a partial listing of sources of information available to the CONTRACTOR about subsurface materials and conditions: the geotechnical information provided by the OWNER; geologic maps, publications and reports available from the University of Texas Bureau of Economic Geology at the J.J. Pickle Research Center in Austin, Texas; subcontractors familiar with local ground conditions; and, local consulting geologists and geotechnical engineers. The CONTRACTOR may make their own subsurface investigations.

End

The undersigned, in compliance with the Invitation for Bids for construction of the following Project: Water Service Line Replacement Program, Indefinite Delivery/Indefinite Quantity

(CIP ID#5309.006) (IFB#6100 CLMC621) for the City of Austin, Texas, having examined the Project Manual, Drawings and Addenda, and having conducted all inquiries, tests and investigations deemed necessary and proper; hereby proposes to furnish all labor, permits, material, machinery, tools, supplies and equipment, and incidentals, and to perform all Work required for construction of the Project in accordance with the Project Manual within the time indicated for the following prices of:

Note: The Bidder will enter the line item subtotal in the "Amount" column below, which is the product of the estimated "Quantity" multiplied by the "Unit Price". Any mathematical errors will be corrected for the purpose of determining the correct Amount to be entered in the Bid Form. The Amounts, including any corrected Amounts, will then be totaled to determine the actual amount of the Bid.

MINIMUM WAGES: Workers on Project shall be paid not less than wage rates, including fringe benefits, as published by the Department of Labor (DOL) for Building Construction and Heavy and Highway Trades "AS APPLICABLE" and/or the $13.03 minimum Wage required by City of Austin Ordinance No. 20160324-015, whichever is higher. The Total Minimum Wage required can be met using any combination of cash and non-cash qualified fringe benefits provided the cash component meets or exceeds the $13.03 minimum wage required.

Bid Item	Quantity	Unit	Item Description	Unit Price	Amount
210S-A	2,000	CY	Flexible Base	$_____	$_____
340S-A	1,500	Ton	Hot Mix Asphaltic Concrete, Type D	$_____	$_____
430S-A	150	LF	P.C. Concrete Curb and Gutter (Excavation)	$_____	$_____
432SR-4	250	SF	Reconstruct Concrete Sidewalks to 4 Inch thickness, including removal of existing sidewalk	$_____	$_____
432SR-6	150	SF	Reconstruct Concrete Sidewalks to 6 Inch thickness, including removal of existing sidewalk	$_____	$_____
509S-1	1,000	LF	Trench Excavation Safety Protective Systems, (all depths)	$_____	$_____

628S-B	100	LF	Sediment Containment Dikes with Filter Fabric	$_____	$_____
803S-WD	200	Working Day	Barricades, Signs, and Traffic Handling	$_____	$_____
803S-SF	500	LF	Safety Fence	$_____	$_____
SS520-A	5,000	LF	Install 1.5” HDPE tubing to replace 1.5” service, trenchless	$_____	$_____
SS520-B	2,500	LF	Install 1” HDPE tubing to replace 1” service, trenchless	$_____	$_____
SS520-C	500	LF	Install 1.5” HDPE tubing to replace 1.5” service, open cut	$_____	$_____
SS520-D	250	LF	Install 1” HDPE tubing to replace 1” service, open cut	$_____	$_____
SS520-E	500	LF	Install 1.5” copper tubing to replace 1.5” service, trenchless	$_____	$_____
SS520-F	250	LF	Install 1” copper tubing to replace 1” service, trenchless	$_____	$_____
SS520-G	500	LF	Install 1.5” copper tubing to replace 1.5” service, open cut	$_____	$_____
SS520-H	250	LF	Install 1” copper tubing to replace 1” service, open cut	$_____	$_____
SS520-I	50	EA	Locate existing copper service	$_____	$_____
SS520-J	20	EA	Reconnect single water service	$_____	$_____

SS520-K	200	EA	Reconnect double water service	$_____	$_____

Allowance (Mobilization) $50,000.00

TOTAL BID (INCLUDING ALLOWANCE(S))..... **$**_____

In the event of a mathematical error, the correct product, determined by using the "Unit Price" and "Quantity", and the correct sum, determined by totaling the correct line item Amounts will prevail over the amount entered by the Bidder. The unit prices shown above will be the unit prices used to tabulate the Bid and used in the Contract, if awarded by the City.

The CONTRACTOR will base its bid amount on the CONTRACTOR'S unit prices and the estimated quantities of Work set forth in the Bid Form, which will only be used for the purpose of comparison and evaluation of Bids. The OWNER will subsequently issue Work Assignments based on the OWNER's needs and not in accordance with the estimated quantities contained in the Bid documents up to the aggregated Contract Amount of $5,000,000, subject to further appropriations. The unit prices bid by the successful bidder shall remain firm throughout the initial term of the CONTRACT.

Bid prices may be adjusted for the Contract extension on the basis of an increase or decrease of the existing prices upwards or downwards in accordance with the 20 City average Engineering News Record Construction Cost Index (CCI) (at the time of notice of contract extension) divided by the current area CCI at the time of bid. The adjusted prices will be included in a change order and will remain firm throughout the Contract extension period. Upon receipt of the notice of the exercise of the option for an additional contract term by the OWNER, the CONTRACTOR must request a Bid price adjustment in writing or the then current Bid prices will remain in force and effect.

Note: For a more detailed explanation of Bid Allowances, see Section 00810-IDIQ and 01020-IDIQ.

Optional Information on Bid Prices Submitted by Computer Printout

In lieu of handwritten unit prices in figures in ink on the Bid forms above, Bidders, at their option, may submit an original computer printout sheet bearing certification by, and signature for, the Bidding firm. The unit prices shown on acceptable printouts will be the unit prices used to tabulate the Bid and used in the Contract if awarded by the City. As a minimum, computer printouts must contain all information and in the format shown on the attached page: "Example of Bid Prices Submitted by Computer Printout" form.

If a computer printout is used, the Bidder must still execute that portion of the unit price Bid form which acknowledges the Bid Guaranty, Time of Completion, Liquidated Damages, and all addenda that may have been issued.

Bids with unit prices by computer printout may be rejected, if:

1. The computer printout does not include the required certification, set forth in the attached "Example".
2. The computer printout is not signed in the name of the firm to whom the Project Manual was issued.

3. The computer printout is non-responsive or otherwise omits required Bid items or includes items not shown on the Bid forms in the Project Manual.
4. The other required Bid documents issued by the City are not fully executed as provided above.
5. The signed Section 00300U-IDIQ is not returned with the signed computer printout.

If the Bid submitted by the Bidder contains both the form furnished by the City, completed according the instructions, and also a computer printout, completed according to the instructions, unit prices of only one will be considered. In this situation, the unit Bid prices shown on the computer printout will be used to determine the Bid.

BID GUARANTY: A Bid guaranty must be enclosed with this Bid, as required in Section 00020-IDIQ, in the amount of not less than five percent (5%) of the total Bid. Following the Bid opening, submitted Bids may not be withdrawn for a period of 90 Calendar Days. Award of Contract will occur within this period, unless mutually agreed between the parties. The Bid guaranty may become the property of the OWNER, or the OWNER may pursue any other action allowed by law, if:

- Bidder withdraws a submitted Bid within the period stated above;
- Bidder fails to submit the required post Bid information within the period specified in Section 00020-IDIQ or 00100, or any mutually agreed extension of that period; or
- Bidder fails to execute the Contract and furnish the prescribed documentation (bonds, insurance, etc.) needed to complete execution of the Contract within five (5) Working Days after notice of award, or any mutually agreed extension of that period.

TIME OF COMPLETION: The undersigned Bidder agrees to commence work on the date specified in each written "Notice to Proceed" to be issued by the OWNER and to **substantially** complete construction of the improvements, as required by the Project Manual, Drawings and Addenda for the Work within the time indicated in each Work Assignment. The Bidder further agrees that should the Bidder fail to **substantially complete the Work or to** complete the Work within the number of days indicated in the Work Assignment or as subsequently adjusted, Bidder shall pay the liquidated damages for each consecutive day thereafter as provided below; unless the OWNER elects to pursue any other action allowed by law.

WAIVER OF ATTORNEY FEES: In submitting its bid, in consideration for the waiver of its right to attorney's fees by the OWNER, the Bidder knowingly and intentionally agrees to and shall waive the right to attorney's fees under Section 271.153 of the Texas Local Government Code in any administrative proceeding, alternative dispute resolution proceeding, or litigation arising out of or connected to any Contract awarded pursuant to this solicitation process.

LIQUIDATED DAMAGES: The Bidder understands and agrees that the timely completion of the described Work in each Work Assignment is of the essence. The Bidder and OWNER further agree that the OWNER's actual damages for delay caused by failure to timely complete the Project are difficult, if not impossible to measure. However, with respect to the additional administrative and consultant costs to be incurred by OWNER, the reasonable estimate of such damages has been calculated and agreed to by OWNER and Bidder. Therefore, the Bidder and the OWNER agree that for each and every **Calendar Day** the Work or any portion thereof, remains incomplete after the **Substantial Completion** date as established by the above paragraph, "Time of Completion", payment will be due to the OWNER in the amount of three-hundred dollars ($300) per **Calendar Day** as liquidated damages, not as a penalty, but for delay damages to the OWNER. Such amount shall be deducted by the OWNER from any Contract payment due. In the event of a default or breach by the CONTRACTOR and demand is made upon the surety to complete the project, in accordance with the Contract Documents, the surety shall be liable for liquidated damages pursuant to the Contract Documents in the same manner as the CONTRACTOR would have been.

OWNER reserves the right to reject any or all Bids and to waive any minor informality in any Bid or solicitation procedure (a minor informality is one that does not affect the competitiveness of the Bids).

The undersigned acknowledges receipt of the following addenda:

Addendum No. 1 dated _____ Received _____

Addendum No. 2 dated _____ Received _____

Addendum No. 3 dated _____ Received _____

Addendum No. 4 dated _____ Received _____

Addendum No. 5 dated _____ Received _____

BID DOCUMENT EXECUTION AND ACKNOWLEDGEMENT:

The undersigned Bidder certifies that he/she has read and understands the Section IDIQ 00020 Invitation for Bids, the Section 00100 Instructions to Bidders, and all other requirements applicable to the bidding process provided in the Bid and Contract Documents.

Bidder will initial each of the blanks set forth below to represent and certify that the Bidder has completed, executed, and enclosed the corresponding supplemental Bid Documents with its Bid.

Bidder acknowledges and agrees by its signature below that in addition to any signatures required to be set forth in the following supplemental Bid Documents, Bidder is bound to the terms and conditions of each of the following documents, which are incorporated herein by reference:

____ 00425A Insurance Cost Form *(ROCIP projects only)*

____ 00440 Affidavit - Prohibited Activities

____ 00475 Nonresident Bidder Provisions

____ 00630 Non-Discrimination and Non-Retaliation Certificate
(NOTE: THIS FORM MUST STILL BE SEPARATELY SIGNED AND PROPERLY NOTARIZED)

____ MBE/WBE Compliance Document

_____ _____
Secretary, *if Bidder is a Corporation Bidder

_____
(Seal) Authorized Signature

_____
Title

_____
Date

_____

_____
Address

_____
Telephone Number / FAX Number

_____
Email Address for Person Signing Bid

_____
Email Address for Bidder's Primary Contact Person

* Copy of Corporate Resolution and minutes with certificate of officer of Bidder as to authority of signatory to bind Bidder is to be signed and dated no earlier than one week before Bid date, and attached to this document.

EXAMPLE: BID PRICES SUBMITTED BY COMPUTER PRINTOUT

Project Name:
CIP ID #:
IFB #:

Bid Item #	***Bid Item Description***	***Unit***	***Qty***	***Unit Bid Price***	***Total Amount***
				Total Bid:	

(YOUR FIRM'S NAME) certifies that the unit prices shown on this completed computer printout for all of the bid items and the alternates contained in this proposal are the unit prices intended and that its Bid will be tabulated using these unit prices and no other information from this printout. (YOUR FIRM'S NAME) acknowledges and agrees that the total bid amount shown will be read as its total bid. *In the event of a mathematical error*, the correct product, determined by using the "Unit Price" and "Quantity", and the correct sum, determined by totaling the correct line item Amounts, will prevail over the amount entered by the Bidder.

Signed: _____

Title: _____

Date: _____

End

STATEMENT OF BIDDERS EXPERIENCE

Section 00400

Project Name: Water Service Line Replacement Program, Indefinite Delivery/Indefinite Quantity

IFB Number: 6100 CLMC621

CIP ID Number: 5309.006

Bidder's Name: _____

Bidder must complete all Attachments to Section 00400 clearly and comprehensively. If necessary, responses may be continued on separately attached sheets.

To be considered a responsive and responsible bidder, the apparent three (3) low Bidders must complete and submit within three (3) working days of notification of low bidder status Attachments A through I in accordance with Article 11, Section 00100. Any information in Attachments A through I that indicates the Bidder or a "Subcontractor" is not responsible or that might negatively impact a Bidder's ability to complete the Work within the Contract Time and for the Contract Price may result in the Bid being rejected.

The Bidder is responsible for the accuracy and completeness of all of the information provided by the Bidder or a proposed Subcontractor in response to this Invitation for Bids.

POST-BID SUBMITTALS

ATTACHMENT A – BIDDER'S INFORMATION

ATTACHMENT B – EXPERIENCE REQUIREMENTS (GENERAL CONTRACTOR)

ATTACHMENT C – PROJECT MANAGER AND SUPERINTENDENT EXPERIENCE

ATTACHMENT D– EXPERIENCE REQUIREMENTS (SPECIFIC CONSTRUCTION OR TECHNICAL EXPERIENCE)

ATTACHMENT E – AVAILABLE EQUIPMENT

ATTACHMENT F – AVAILABLE WORKFORCE

ATTACHMENT G – CURRENT PROJECTS

ATTACHMENT H – COMPLETED PROJECTS

ATTACHMENT I – BIDDER'S AUTHENTICATION

ATTACHMENT A

BIDDER'S INFORMATION

(Complete and return within three (3) days of notification of the three (3) low bidders' status)

IFB Number: 6100 CLMC621

CIP ID Number: 5309.006

A. ***Name of Bidder:*** _____

B. ***Bidder's Permanent Address:*** _____

C. ***Bidder's Phone No.: ( )*** _____-_____

D. ***Number of years in business under current company name:*** ____

(Note: Bidder must have been in existence for a minimum of one (1) year under its current company name. Changes in company name during the experience period are acceptable, if the continuity of the company can be demonstrated. Attach separate documentation, if applicable.)

If Bidder answers "YES" for any of questions D through G, Bidder must attach separate sheets with a brief description or explanation of the answer and provide pertinent contact information (parties' names, addresses and telephone numbers).

E. ***Has the Bidder ever defaulted on a contract?***

YES (____) NO (____)

F. ***Are there currently any pending judgments, claims, or lawsuits against the Bidder?***

YES (____) NO (____)

G. ***Does Bidder currently have any pending claims, judgments or lawsuits against any prior client?***

YES (____) NO (____)

H. ***Is the Bidder or its principals involved in any bankruptcy or reorganization proceedings?***

YES (____) NO (____)

ATTACHMENT B

EXPERIENCE REQUIREMENTS (GENERAL CONTRACTOR)

(Complete and return within three (3) days of notification of the three (3) low bidders' status)

IFB Number: 6100 CLMC621

CIP ID Number: 5309.006

GENERAL CONTRACTOR EXPERIENCE

Bidder must list and describe Bidder's (not proposed subcontractors') construction experience as a general contractor for a minimum of three (3) successfully completed projects of comparable size, scope and complexity to the Work described in the Contract Documents. Bidders should refer to the 1.2 Description of Work section in contract document 01010 Summary of Work to determine what is reasonably comparable. Decisions on "comparability" are at the complete discretion of the OWNER.

Bidder must have completed the projects within the past five (5) years.

PROJECT NO. 1:

Name of Project: _____

Location: _____

OWNER's Name and Address: _____

OWNER's Contact Person (Print): _____

Phone/Fax No.: _____/_____

Initial Contract Price: _____

Final Contract Price: _____

Contract Start Date: _____ *(Date of Notice To Proceed)*

Contract Time: _____( ) *Calendar Days* ( ) *Working Days*

Contract Substantial Completion Date: _____

Actual Substantial Completion Date: _____

If contract time extensions were added to the contract as a result of Bidder's responsibilities, provide a short explanation of each.

_____

_____

_____

Project Description and why it is comparable to this Contract:

_____

_____

_____

_____

_____

_____

_____

_____

_____

_____

_____

PROJECT NO. 2:

Name of Project: _____

Location: _____

OWNER's Name and Address: _____

OWNER's Contact Person (Print): _____

Phone/Fax No.:_____/_____

Initial Contract Price: _____

Final Contract Price: _____

Contract Start Date: _____ *(Date of Notice To Proceed)*

Contract Time: _____( ) *Calendar Days* ( ) *Working Days*

Contract Substantial Completion Date: _____

Actual Substantial Completion Date: _____

If contract time extensions were added to the contract as a result of Bidder's responsibilities, provide a short explanation of each.

_____

_____

_____

Project Description and why it is comparable to this Contract:

_____

_____

_____

_____

_____

_____

_____

_____

_____

_____

_____

PROJECT NO. 3:

Name of Project: _____

Location: _____

OWNER's Name and Address: _____

OWNER's Contact Person (Print): _____

Phone/Fax No.:_____/_____

Initial Contract Price: _____

Final Contract Price:_____

Contract Start Date: _____ *(Date of Notice To Proceed)*

Contract Time: _____( ) *Calendar Days* ( ) *Working Days*

Contract Substantial Completion Date: _____

Actual Substantial Completion Date: _____

If contract time extensions were added to the contract as a result of Bidder's responsibilities, provide a short explanation of each.

_____

_____

_____

Project Description and why it is comparable to this Contract:

_____

_____

_____

_____

_____

_____

ATTACHMENT C

PROJECT MANAGER & SUPERINTENDENT EXPERIENCE

(Complete and return within three (3) days of notification of the three (3) low bidders' status)

IFB Number: 6100 CLMC621

CIP ID Number: 5309.006

Bidder must attach resumes for the Project Manager and Superintendent who will be assigned to this project. The resumes must demonstrate that these individuals have worked on at least three (3) similar, successfully completed projects in the capacity of Project Manager or Superintendent, or other responsible supervisory capacity, as applicable, during the last 10 years.

Project Manager (name): _____

Superintendent (name): _____

(Insert Resumes & Experience)

ATTACHMENT D

(Complete and return within three (3) days of notification of the three (3) low bidders' status)

SPECIFIC CONSTRUCTION EXPERIENCE (GENERAL CONTRACTOR OR SUBCONTRACTOR PERFORMING THE WORK)

Bidder must provide the following project history information for each Construction Experience requirement listed below. OWNER may in its reasonable discretion deem the provided experience information insufficient and reject the Bid.

For each Construction Experience item listed below, list and describe the applicable Construction Experience for a minimum of three (3) successfully completed projects of comparable size, scope, and complexity to the Work described for this project. Comparability requirements may be spread among the three (3) projects per item submitted, e.g. One Project may demonstrate comparable size, another Project may demonstrate comparable scope and another may demonstrate comparable complexity. Decisions on "comparability" are at the complete discretion of the OWNER.

The Work must have been performed within the past five (5) years.

Bidder must provide all requested information in a complete, clear, and accurate manner. If necessary, additional information may be provided on separate attached sheets. Failure to provide any requested information may cause the Bid to be rejected by OWNER as non-responsive.

If the Bidder proposes to fulfill any specific construction experience requirement with subcontracted resources, the applicable Subcontractor must be included in the Bidder's Original MBE/WBE Compliance Plan. Failure to include subcontractors on the MBE/WBE Compliance Plan may render your bid non-responsive.

SPECIFIC CONSTRUCTION EXPERIENCE ITEMS REQUIRED:

ITEM 1. Furnish and installation of water service lines in street right of way identical or similar to City of Austin Standard Details 520S-9, 520S-9B, 520S-11B, and 520S-13B.

The Bidder shall complete and duplicate the following specific Construction Experience Form as required to provide the requested documentation for a minimum of three (3) successfully completed projects for each of the above specific Construction Experience requirements.

CONSTRUCTION EXPERIENCE DOCUMENTATION FORM

EXPERIENCE ITEM NUMBER: _____

Project Number: _____

Does Bidder plan to self perform this work? YES (_____) NO (_____)

If "NO", provide the following Subcontractor information:

Company Name: _____

Permanent Address: _____

Phone Number: _____

Number of years Subcontractor has been in business under current company name: _____

Name of Project: _____

Location: _____

OWNER's Name: _____

OWNER's Address: _____

OWNER's Contact Person (Print): _____

Phone/Fax No.:_____/_____

Initial Contract Price: _____

Final Contract Price: _____

Contract Start Date: _____ *(Date of Notice To Proceed)*

Contract Time: _____( ) *Calendar Days* ( ) *Working Days*

Contract Substantial Completion Date: _____

Actual Substantial Completion Date: _____

If contract time extensions were added to the contract as a result of Bidder's responsibilities, provide a short explanation of each.

_____

_____

_____

Project Description and why it is comparable to the size, scope, and/or complexity for this item:

_____

_____

_____

_____

_____

_____

ATTACHMENT E

AVAILABLE EQUIPMENT LIST

(Complete and return within three (3) days of notification of the three (3) low bidders' status)

Name of Bidder: _____

IFB Number: **6100 CLMC621**

CIP ID Number: **5309.006**

Provide a list of equipment that is available to the CONTRACTOR or its Subcontractor(s) and is specifically intended to be used on the Work under this Contract. Also indicate whether the equipment is owned or will be leased by the CONTRACTOR and/or Subcontractor(s).

EQUIPMENT	OWNED OR LEASED	COMMITTED TO ANOTHER PROJECT? (Yes / No)	AVAILABLE / RELEASE DATE

Use additional pages, as necessary

ATTACHMENT F

AVAILABLE WORKFORCE

(Complete and return within three (3) days of notification of the three (3) low bidders' status)

Name of Bidder: _____

IFB Number: **6100 CLMC621**

CIP ID Number: **5309.006**

Provide a list of the available workforce for the various disciplines and crafts required for the Work on this Project, including the number of work crews, and number and worker classification for each equipment operator, mechanic, and laborer for that portion of the Work that Bidder will actually perform.

Number of Anticipated Work Crews: _____

DISCIPLINE OR CRAFT	NO. OF EMPLOYEES	COMMITTED TO ANOTHER PROJECT? (Yes / No)	AVAILABLE / RELEASE DATE
Professional (specify)			
Superintendent			
Technical (specify)			
Skilled Workers (specify)			
Semiskilled Workers (specify)			
Equipment Operators (list)			
Other			
Other			

Use additional pages, as necessary

ATTACHMENT G

CURRENT PROJECT LISTING (INCLUDING ALL CITY OF AUSTIN PROJECTS)

(Complete and return within three (3) days of notification of the three (3) low bidders' status)

Name of Bidder: _____

IFB Number: **6100 CLMC621**

CIP ID Number: **5309.006**

Provide a list of all current projects, including *all City of Austin projects*. Include the following for all jobs that Bidder is currently committed to or has currently underway: brief statement regarding the job type; estimated project duration; project contact; and project description.

Name of Project: _____ Location: _____

Type of Job: _____ City of Austin Job? ☐ Yes / ☐ No

Project Start Date: _____ Estimated Completion Date: _____

Project Contact: _____

Brief Description: _____

_____

Name of Project: _____ Location: _____

Type of Job: _____ City of Austin Job? ☐ Yes / ☐ No

Project Start Date: _____ Estimated Completion Date: _____

Project Contact: _____

Brief Description: _____

_____

Name of Project: _____ Location: _____

Type of Job: _____ City of Austin Job? ☐ Yes / ☐ No

Project Start Date: _____ Estimated Completion Date: _____

Project Contact: _____

Brief Description: _____

_____

Name of Project: _____ Location: _____

Type of Job: _____ City of Austin Job? ☐ Yes / ☐ No

Project Start Date: _____ Estimated Completion Date: _____

Project Contact: _____

Brief Description: _____

_____

Use additional pages, as necessary

ATTACHMENT H

COMPLETED PROJECTS (INCLUDING ALL CITY OF AUSTIN PROJECTS)

(Complete and return within three (3) days of notification of the three (3) low bidders' status)

Name of Bidder: _____

IFB Number: **6100 CLMC621**

CIP ID Number: **5309.006**

Provide a list of all completed projects, including *all City of Austin projects* that Bidder has completed in the past five (5) years by calendar year (or life of company if less than five (5) years). Include the following: a brief statement regarding the job type, the estimated project duration, project contact, and project description.

Calendar Year of _____

Name of Project: _____ Location: _____

Type of Job: _____ City of Austin Job? ☐ Yes / ☐ No

Project Duration: _____ Project Contact: _____

Brief Description: _____

_____

_____

Name of Project: _____ Location: _____

Type of Job: _____ City of Austin Job? ☐ Yes / ☐ No

Project Duration: _____ Project Contact: _____

Brief Description: _____

_____

_____

Name of Project: _____ Location: _____

Type of Job: _____ City of Austin Job? ☐ Yes / ☐ No

Project Duration: _____ Project Contact: _____

Brief Description: _____

_____

_____

Name of Project: _____ Location: _____

Type of Job: _____ City of Austin Job? ☐ Yes / ☐ No

Project Duration: _____ Project Contact: _____

Brief Description: _____

_____

_____

Use additional pages as necessary to achieve a representative listing covering 5 years

ATTACHMENT I

BIDDERS AUTHENTICATION

(Complete and return within three (3) days of notification of the three (3) low bidders' status)

Name of Bidder: _____

IFB Number: **6100 CLMC621**

CIP ID Number: **5309.006**

THE STATE OF TEXAS

COUNTY OF TRAVIS

I certify that my responses and the information provided in Attachments A-H are true and correct to the best of my personal knowledge and belief and that I have made no willful misrepresentations in this Section, nor have I withheld any relevant information in my statements and answers to questions. I am aware that any information given by me in this Section may be investigated and I hereby give my full permission for any such investigation and I fully acknowledge that any misrepresentations or omissions in my responses and information may cause my bid to be rejected.

Bidder's full name and entity status:

_____

Company's Name

_____

Signature, Authorized Representative of Bidder

_____

Title

_____

Date

CERTIFICATE OF NON-SUSPENSION OR DEBARMENT

Section 00405

The City of Austin is prohibited from contracting with or making prime or sub-awards to parties that are suspended or debarred or whose principals are suspended or debarred from Federal, State, or City of Austin Contracts. Covered transactions include procurement contracts for goods or services equal to or in excess of $25,000.00 and all non-procurement transactions. This certification is required for all bidders on all City of Austin Contracts to be awarded with values equal to or in excess of $25,000.00 and all non-procurement transactions.

The CONTRACTOR hereby certifies that its firm and its principals are not currently suspended or debarred from bidding on any Federal, State, or City of Austin Contracts.

PROJECT Name _____

PROJECT Address _____

CONTRACTOR'S Name _____

Signed by (Authorized Representative) _____

Printed Name: _____

Title _____

Date _____

END

SAFETY RECORD QUESTIONNAIRE & STATEMENT OF BIDDER'S SAFETY EXPERIENCE

(To Be Submitted Post-Bid)

Project: Water Service Line Replacement Program, Indefinite Delivery/Indefinite Quantity

CIP ID Number: 5309.006

IFB Number: 6100 CLMC621

Pursuant to Section 252.0435 of the Local Government Code, the Austin City Council will consider the safety records of potential contractors prior to awarding bids on City contracts. The City of Austin has adopted the following written definitions and criteria for accurately determining the safety record of a Bidder prior to awarding bids on City contracts. The term "Bidder" includes the firm, corporation, partnership, or other legal entity represented by the Bidder or anyone acting for such firm, corporation, partnership or other entity submitting the bid. The definitions and criteria for determining the safety record of a Bidder are:

> "Citations" include notices of violation, notices of enforcement, suspension/revocations of state or federal licenses or registrations, fines assessed pending criminal complaints, indictments, or convictions, administrative orders, draft orders, final orders, and judicial final judgments. Notice of Violations and Notice of Enforcement received from the TCEQ shall include those classified as major violations and moderate violations under the TCEQ'S regulations for documentation of Compliance History, 30 Texas Administrative Code, Chapter 60.2 (c) (1) and (2).
>
> "Environmental Protection Agency" includes, but is not limited to the Texas Commission on Environmental Quality (TCEQ), the U.S. Environmental Protection Agency, the U.S. Fish and Wildlife Service, the U.S. Army Corps of Engineers, the Texas Department of Health, the Texas Parks and Wildlife Department, the Structural Pest Control Service, agencies of local governments responsible for enforcing environmental protection laws or regulations, and similar regulatory agencies of other states of the United States.

1. If the Bidder's response to the following questions reveals more than two (2) cases in which final orders have been entered by the Occupational Safety and Health Review Commission (OSHRC) against the Bidder for serious violations of Occupational Safety & Health Administration (OSHA) regulations within the past five (5) years, the City will, at its discretion, determine whether to disqualify the Bidder.
2. If the Bidder's response to the following questions reveals more than one (1) case in which Bidder has received a citation or for which final orders have been entered from an environmental protection agency for violations within the past five (5) years, the City will, at its discretion, determine whether to disqualify the Bidder.
3. If the Bidder's response to the following questions reveals that the Bidder has been convicted of a criminal offense within the past ten (10) years or has been subject to a judgment for a negligent act or omission, which resulted in serious bodily harm or death, at its discretion, the City will determine whether to disqualify the Bidder.
4. The City may consider the responses to each question listed below separately when making a discretionary determination of whether to disqualify a Bidder and it may consider the

cumulative impact of the information generated by the Bidder's responses in making the determination.

5. The Bidder acknowledges the requirements for Safety Training (listed in Section 00700) must be met before any work commences on the project.
6. In order to consider the safety records of potential contractors prior to awarding bids on City contracts, the City requires that Bidders answer the following questions and submit them upon request:

QUESTION ONE

Has the Bidder received any Citations for violations of OSHA within the past five (5) years? ❒ Yes ❒ No

QUESTION TWO

Has the Bidder received any Citations for violations of environmental protection laws or regulations within the past five (5) years? ❒ Yes ❒ No

QUESTION THREE

Has the Bidder ever been convicted, within the past ten (10) years, of a criminal offense or has been subject to a judgment for a negligent act or omission, which resulted in serious bodily injury or death? ❒ Yes ❒ No

---

If the Bidder has indicated "Yes" to any question above, the Bidder must provide to the City, with its bid submission, the following information:

Date of Citation or offense and location where violation or offense occurred, type of violation or offense, final disposition of violation or offense, if any, and penalty assessed.

In addition, the City will utilize the following information and in its discretion, as additional support to make any discretionary determination of whether to disqualify a Bidder. Accordingly, Bidder must answer the following questions and provide evidence that it meets minimum OSHA construction safety standards and has a lost time injury rate that does not exceed the limits established below:

1. Does the Bidder have a written construction safety program? ❒ Yes ❒ No
2. Does the Bidder conduct regular construction site safety inspections? ❒ Yes ❒ No
3. Does the Bidder have an active construction safety training program? ❒ Yes ❒ No
4. Does the Bidder or affected subcontractors have competent persons in the following areas (as applicable to the scope of the current Project):

A. Scaffolding	❒ Yes	❒ No	❒ N/A
B. Excavation	❒ Yes	❒ No	❒ N/A
C. Cranes & Hoists	❒ Yes	❒ No	❒ N/A
D. Electrical	❒ Yes	❒ No	❒ N/A
E. Fall Protection	❒ Yes	❒ No	❒ N/A
F. Confined Spaces	❒ Yes	❒ No	❒ N/A
G. Material Handling	❒ Yes	❒ No	❒ N/A
H. Demolition	❒ Yes	❒ No	❒ N/A

I. Steel Erection ❒ Yes ❒ No ❒ N/A
J. Underground Construction ❒ Yes ❒ No ❒ N/A

5. Does the company have a lost time injury rate and a total recordable injury rate of less than or equal to the national average for North American Industrial Classification System (NAICS) Category 23 for each of the past five (5) years? (Attach the Bidder's OSHA 300 and 300A logs for the past five (5) years) ❒ Yes ❒ No

6. Does the Bidder have an experience modifier rate of 1.0 or less? (Attach the Bidder's NCCI workers compensation experience rating sheets for the past five (5) years) ❒ Yes ❒ No

7. Has the Bidder had any OSHA inspections within the past six (6) months? ❒ Yes ❒ No
(If "YES", provide sufficient documentation to indicate the nature of the inspection, the findings, and magnitude of the issues.)

ACKNOWLEDGEMENT

THE STATE OF TEXAS

COUNTY OF TRAVIS

I certify that my responses and the information provided are true and correct to the best of my personal knowledge and belief and t

hat I have made no willful misrepresentations in this Questionnaire, nor have I withheld any relevant information in my statements and answers to questions. I am aware that any information given by me in this questionnaire may be investigated and I hereby give my full permission for any such investigation and I fully acknowledge that any misrepresentations or omissions in my responses and information may cause my bid to be rejected.

Bidder's full name and entity status:

_____

Company's Name

_____

Signature, Authorized Representative of Bidder

_____

Title

_____

Date

END

CITY OF AUSTIN

BIDDER'S AFFIDAVIT OF NON-COLLUSION,

NON-CONFLICT OF INTEREST, AND ANTI-LOBBYING FOR

IFB NO. 6100 CLMC621

FOR: Water Service Line Replacement Program, Indefinite Delivery/Indefinite Quantity

CIP ID Number: 5309.006

State of Texas

County of Travis

The undersigned "Affiant" is a duly authorized representative of the bidder for the purpose of making this Affidavit, and, after being first duly sworn, has deposed and stated and hereby deposes and states, to the best of his or her personal knowledge and belief as follows:

The term **"Bidder"**, as used herein, includes the individual or business entity submitting the bid and for the purpose of this Affidavit includes the directors, officers, partners, managers, members, principals, owners, agents, representatives, employees, other parties in interest of the Bidder, and anyone or any entity acting for or on behalf of the Bidder, including a subcontractor in connection with this bid.

The terms **"City"** and **"Owner"** are synonymous.

1. **Anti-Collusion Statement.** The Bidder has not and will not in any way directly or indirectly:

   a. colluded, conspired, or agreed with any other person, firm, corporation, bidder or potential bidder to the amount of this bid or the terms or conditions of this bid.

   b. paid or agreed to pay any other person, firm, corporation bidder or potential bidder any money or anything of value in return for assistance in procuring or attempting to procure a contract or in return for establishing the prices in the attached bid or the bid of any other bidder.

2. **Preparation of Invitation for Bid and Contract Documents**. The Bidder has not received any compensation or a promise of compensation for participating in the preparation or development of the underlying bid or contract documents., In addition, the Bidder has not otherwise participated in the preparation or development of the underlying bid or contract documents, except to the extent of any comments or questions and responses in the bidding process, which are available to all bidders, so as to have an unfair advantage over other bidders, provided that the Bidder may have provided relevant product or process information to a consultant in the normal course of its business.

3. **Participation in Decision Making Process.** The Bidder has not participated in the evaluation of bids or proposals or other decision making process for this solicitation, and, if Bidder is awarded a contract hereunder, no individual, agent, representative, consultant or sub contractor or consultant associated with Bidder, who may have been involved in the evaluation or other decision making process for this solicitation, will have any direct or indirect financial interest in the Contract, provided that the Bidder may have provided relevant product or process information to a consultant in the normal course of its business.

.

4. **Present Knowledge.** Bidder is not presently aware of any potential or actual conflicts of interest regarding this solicitation, which either enabled Bidder to obtain an advantage over other bidders or would prevent Bidder from advancing the best interests of OWNER in the course of the performance of the Contract.

5. **City Code.** As provided in Sections 2-7-61 through 2-7-65 of the City Code, no individual with a substantial interest in Bidder is a City official or employee or is related to any City official or employee within the first or second degree of consanguinity or affinity.

6. **Chapter 176 Conflict of Interest Disclosure.** In accordance with Chapter 176 of the Texas Local Government Code, the Bidder:

   a. does not have an employment or other business relationship with any local government officer of OWNER or a family member of that officer that results in the officer of family member receiving taxable income;

   b. has not given a local government officer of OWNER one or more gifts, other than gifts of food lodging transportation or entertainment accepted as a guest, that have an aggregate value of more than $100 in the twelve month period preceding the date the officer becomes aware of the execution of the Contract or that OWNER is considering doing business with the Bidder; and

   c. does not have a family relationship with a local government officer of OWNER in the third degree of consanguinity or the second degree of affinity.

   As required by Chapter 176, Bidder must file the Conflicts of Interest Questionnaire with the Purchasing Department no later than the seventh business day after the commencement of contract discussions or negotiations with the City or the submission of a Bid, response to a request for proposals, or other writing related to a potential contract with OWNER. The questionnaire must be updated not later than the seventh day after the date of an event that would make a statement in the questionnaire inaccurate or incomplete. There are statutory penalties for failure to comply with Chapter 176.

7. **Anti-Lobbying Ordinance.** As set forth in paragraph 1.i. of the Instructions to Bidders Section 00100, between the date that the Invitation for Bid was issued and the date of full execution of the Contract, Bidder has not made and will not make a representation to a member of the City Council, a member of a City Board, or any other official, employee or agent of the City, other than the authorized contact person for the solicitation, except as permitted by the Ordinance.

If the Bidder cannot affirmatively swear and subscribe to the forgoing statements, the Bidder shall provide a detailed written explanation in the space provided below or, as necessary, on separate pages to be annexed hereto.

Signature: _____ Date: _____

Printed Name: _____

Title: _____

Firm/Entity: _____

Subscribed and sworn to before me this ____ day of _____, 20__.

_____ My Commission Expires _____
Notary Public

BIDDER'S EXPLANATION:

_____

END

NONRESIDENT BIDDER PROVISIONS

Section 00475

CIP ID Number: 5309.006

Bidder must answer the following questions in accordance with Vernon's Texas Statutes and Codes Annotated Government Code § 2252.002, as amended:

A. Is the bidder that is making and submitting this bid a "resident bidder" or a "non-resident bidder"?

Answer: _____

(1) Texas Resident Bidder - A bidder whose principal place of business is in Texas and includes a Contractor whose ultimate parent company or majority owner has its principal place of business in Texas.

(2) Nonresident Bidder - A bidder who is not a Texas Resident Bidder.

B. If the Bidder is a "Nonresident Bidder", does the state, in which the Nonresident Bidder's principal place of business is located, have a law requiring a Nonresident Bidder of that state to bid a certain amount or percentage under the bid of a Resident Bidder of that state in order for the nonresident bidder of that state to be awarded a contract on his bid in such state?

Answer: Yes or No Which state? _____

If the answer to Question B is "yes", then what amount or percentage must a Texas Resident Bidder bid under the bid price of a Resident Bidder of that state in order to be awarded a contract on such bid in said state?

Answer: _____

_____
Signature

END

STATE OF TEXAS
COUNTY OF TRAVIS

THIS AGREEMENT is made and entered into this _____ day of _____, 20____, by and between the City of Austin, Texas, a municipal corporation, organized and existing under laws of State of Texas, acting through its City Manager or other duly authorized designee, hereinafter referred to as the "OWNER," and _____, of the City of _____, County of _____, and State of _____, hereinafter referred to as the "CONTRACTOR."
In consideration of the promises, performances, payments and agreements set forth herein CONTRACTOR hereby agree to commence and complete the following Project:

Waterline Service Line Replacement Program, Indefinite Delivery/Indefinite Quantity

The Contract will be for an initial 12-month term, with 3 possible 12-month extensions. Extension of the Contract will be at the mutual agreement of both the OWNER and the CONTRACTOR. If the CONTRACTOR chooses not to renew, a hold over extension of the Contract term for up to 120 calendar days may be implemented by the OWNER to allow time for re-bidding. The OWNER reserves the right not to offer an extension. Work Assignments may be issued at any time during the term of the Contract. Work Assignments not completed by the expiration date of the Contract are subject to the terms and conditions of the Contract which will continue in full force and effect.

Subject to the further approval of the Austin City Council, the initial Contract Amount will not exceed one million dollars ($1,000,000) for the initial Contract Term and one million dollars ($1,000,000) for each extension option for a total potential Contract Amount not to exceed four million dollars ($4,000,000), which may be increased subject to the availability of funding and further approval of the Austin City Council.

The CONTRACTOR will base its bid amount on the CONTRACTOR's unit prices and the estimated quantities of Work set forth in the Bid Form, which will only be used for the purpose of the comparison and evaluation of Bids. The OWNER will subsequently issue Work Assignments based on the OWNER's needs and not in accordance with the estimated quantities contained in the Bid documents up to the aggregated Contract Amount of four million dollars ($4,000,000), subject to further appropriations.

In consideration of the award and execution of this Contract, and in consideration of the waiver of its right to attorney's fees by the OWNER, the CONTRACTOR knowingly and intentionally waives its right to attorney's fees under Section 271.153 of the Texas Local Government Code in any administrative proceeding, alternative dispute resolution proceeding, or litigation arising out of or connected to this Contract.

OWNER agrees to pay CONTRACTOR from available funds for performance of the Contract in accordance with the Bid and the provisions of the Contract Documents, subject to additions and deductions, as provided therein.

The OWNER's payment obligations are payable only and solely from funds available for the purposes of this Agreement.

Although drafted by OWNER, this Agreement, in event of any disputes over its meaning or application, shall be interpreted fairly and reasonably, and neither more strongly for nor against either party.

SAMPLE

OWNER

By:_____
City of Austin (Signature)

_____
Date

_____
Title of Signatory

APPROVED AS TO FORM:

By:_____
Law Department

_____
Date

§ CONTRACTOR
§
§ By:_____
§ (Signature)

§ _____
§ Date
§ _____
§ Printed Name of Signatory
§
§ _____
§ Title of Signatory, Authorized Representative
§
§ ATTEST (as applicable)
§
§_____
§ Secretary of Corporate Bidder or Corporate General Partner *

*Copy of Corporate Resolution and minutes with certificate of officer of CONTRACTOR as to authority of signatory to bind CONTRACTOR is to be signed, dated no earlier than one week before the date of award of Contract, and attached to this document.

END

SAMPLE

PERFORMANCE BOND

Section 00610

STATE OF TEXAS

COUNTY OF _____

Bond No. _____

C.I.P. ID No. **5309.006**

Project Name **Water Service Line Replacement Program, Indefinite Delivery/Indefinite Quantity**

Know All Men By These Presents: That _____ of the City of _____, County of _____, and State of _____, as Principal, and _____, a solvent company authorized under laws of the State of Texas to act as surety on bonds for principals, are held and firmly bound unto _____ (OWNER), in the penal sum of_____ _____ U.S. Dollars ($ _____U.S.) for payment whereof, well and truly to be made, said Principal and Surety bind themselves and their heirs, administrators, executors, successors and assigns, jointly and severally, by these presents:

Conditions of this Bond are such that, whereas, Principal has entered into a certain written contract with OWNER, dated the _____ day of _____, _____, which Agreement is hereby referred to and made a part hereof as fully and to the same extent as if copied at length herein.

Now, therefore, the condition of this obligation is such, that if said Principal shall faithfully perform said Agreement and shall in all respects duly and faithfully observe and perform all and singular covenants, conditions and agreements in and by said contract agreed and covenanted by Principal to be observed and performed, and according to true intent and meaning of said Agreement hereto annexed, then this obligation shall be void; otherwise to remain in full force and effect. If OWNER notifies Principal and Surety the OWNER is considering declaring Principal in default, Surety agrees to meet with OWNER and Principal no later than fifteen days after receipt of such notice to discuss methods of performing the Work of the Contract.

Provided, however, that this bond is executed pursuant to provisions of Chapter 2253, Texas Government Code as amended and all liabilities on this bond shall be determined in accordance with provisions of said Article to same extent as if it were copied at length herein.

Surety, for value received, stipulates and agrees that no change in Contract Time or Contract Amount shall in anywise affect its obligation on this bond, and it does hereby waive notice of any such change in Contract Time or Contract Amount.

In witness whereof, said Principal and Surety have signed and sealed this instrument this _____day of _____, _____.

_____	_____
Principal	Surety
By_____	By_____
(Signature)	(Signature)
Title_____	Title_____
Address_____	Address_____
_____	_____
_____	_____

Telephone_____Fax_____

E-Mail Address _____

Name and address of Resident Agent of Surety:

_____

_____

Note: Bond shall be issued by a solvent Surety company authorized to do business in Texas, and shall meet any other requirements established by law or by OWNER pursuant to applicable law. A copy of surety agent's "Power of Attorney" must be attached hereto.

END

PAYMENT BOND

Section 00620

STATE OF TEXAS

COUNTY OF _____

Bond No. _____

C.I.P. ID No. **5309.006**

Project Name **Water Service Line Replacement Program, Indefinite Delivery / Indefinite Quantity**

Know All Men By These Presents: That _____ of the City of _____, County of _____, and State of _____, as Principal, and _____, a solvent company authorized under laws of the State of Texas to act as surety on bonds for principals, are held and firmly bound unto _____ (OWNER), and all Subcontractors, workers, laborers, mechanics and suppliers as their interests may appear, all of whom shall have right to sue upon this bond in the penal sum of _____ U.S. Dollars ($ _____U.S.) for payment whereof, well and truly to be made, said Principal and Surety bind themselves and their heirs, administrators, executors, successors and assigns, jointly and severally, by these presents:

Conditions of this Bond are such that, whereas, Principal has entered into a certain written contract with OWNER, dated the _____ day of _____, _____, which Agreement is hereby referred to and made a part hereof as fully and to the same extent as if copied at length herein.

Now, therefore, condition of this obligation is such, that if the said Principal shall well and truly pay all Subcontractors, workers, laborers, mechanics, and suppliers, all monies to them owing by said Principals for subcontracts, work, labor, equipment, supplies and materials done and furnished for the construction of improvement of said Agreement, then this obligation shall be and become null and void; otherwise to remain in full force and effect.

Provided, however, that this bond is executed pursuant to provisions of Chapter 2253, Texas Government Code as amended and all liabilities on this bond shall be determined in accordance with provisions of said Article to same extent as if it were copied at length herein.

Surety, for value received, stipulates and agrees that no change in Contract Time or Contract Amount shall in anywise affect its obligation on this bond, and it does hereby waive notice of any such change in Contract Time or Contract Amount.

In witness whereof, said Principal and Surety have signed and sealed this instrument this _____day of _____, _____.

_____	_____
Principal	Surety
By_____	By_____
(Signature)	(Signature)
Title_____	Title_____
Address_____	Address_____
_____	_____
_____	_____

Telephone_____Fax_____

E-Mail Address _____

Name and address of Resident Agent of Surety:

_____

_____

Note: Bond shall be issued by a solvent Surety company authorized to do business in Texas, and shall meet any other requirements established by law or by OWNER pursuant to applicable law. A copy of surety agent's "Power of Attorney" must be attached hereto.

END

CIP ID Number:

City of Austin, Texas
Equal Employment/Fair Housing Office

To: City of Austin, Texas, ("OWNER")

I hereby certify that our firm conforms to the Code of the City of Austin Section 5-4-2 as reiterated below:

Chapter 5-4. Discrimination in Employment by City Contractors.

Sec. 4-2 Discriminatory Employment Practices Prohibited. (B) As an Equal Employment Opportunity (EEO) employer, the Contractor will conduct its personnel activities in accordance with established federal, state and local EEO laws and regulations and agrees:

(1) Not to engage in any discriminatory employment practice defined in this chapter.

(2) To take affirmative action to ensure that applicants are employed, and that employees are treated during employment, without discrimination being practiced against them as defined in this chapter. Such affirmative action shall include, but not be limited to: all aspects of employment, including hiring, placement, upgrading, transfer, demotion, recruitment, recruitment advertising; selection for training and apprenticeship, rates of pay or other forms of compensation, and layoff or termination.

(3) To post in conspicuous places, available to employees and applicants for employment, notices to be provided by OWNER setting forth the provisions of this chapter.

(4) To state in all solicitations or advertisements for employees placed by or on behalf of Contractor, that all qualified applicants will receive consideration for employment without regard to race, creed, color, religion, national origin, sexual orientation, gender identity, disability, veteran status, sex or age.

(5) To obtain a written statement from any labor union or labor organization furnishing labor or service to Contractors in which said union or organization has agreed not to engage in any discriminatory employment practices as defined in this chapter and to take affirmative action to implement policies and provisions of this chapter.

(6) To cooperate fully with OWNER's Equal Employment/Fair Housing Office in connection with any investigation or conciliation effort of said Equal Employment/Fair Housing Office to ensure that the purpose of the provisions against discriminatory employment practices are being carried out.

(7) To require compliance with provisions of this chapter by all subcontractors having fifteen or more employees who hold any subcontract providing for expenditure of $2,000.00 or more in connection with any contract with OWNER subject to the terms of this chapter. .

For the purposes of this Bid and any resulting Contract, Contractor adopts the provisions of the City's Minimum Standard Nondiscrimination and Non-Retaliation Policy as set forth below.

City of Austin

Minimum Standard Non-Discrimination and Non-Retaliation in Employment Policy

As an Equal Employment Opportunity (EEO) employer, the Contractor will conduct its personnel activities in accordance with established federal, state and local EEO laws and regulations.

The Contractor will not discriminate against any applicant or employee based on race, creed, color, national origin, sex, age, religion, veteran status, gender identity, disability, or sexual orientation. This policy covers all aspects of employment, including hiring, placement, upgrading, transfer, demotion, recruitment, recruitment advertising, selection for training and apprenticeship, rates of pay or other forms of compensation, and layoff or termination.

The Contractor agrees to prohibit retaliation, discharge or otherwise discrimination against any employee or applicant for employment who has inquired about, discussed or disclosed their compensation.

Further, employees who experience discrimination, sexual harassment, or another form of harassment should immediately report it to their supervisor. If this is not a suitable avenue for addressing their complaint, employees are advised to contact another member of management or their human resources representative. No employee shall be discriminated against, harassed, intimidated, nor suffer any reprisal as a result of reporting a violation of this policy. Furthermore, any employee, supervisor, or manager who becomes aware of any such discrimination or harassment should immediately report it to executive management or the human resources office to ensure that such conduct does not continue.

Contractor agrees that to the extent of any inconsistency, omission, or conflict with its current non-discrimination and non- retaliation employment policy, the Contractor has expressly adopted the provisions of the City's Minimum Non-Discrimination Policy contained in Section 5-4-2 of the City Code as set forth above and the City's Non-Retaliation Policy, as the Contractor's Non-Discrimination and Non-Retaliation Policy or as an amendment to such Policy and such provisions are intended to not only supplement the Contractor's policy, but will also supersede the Contractor's policy to the extent of any conflict.

UPON CONTRACT AWARD, THE CONTRACTOR SHALL PROVIDE A COPY TO THE CITY OF THE CONTRACTOR'S NON-DISCRIMINATION AND NON-RETALIAITON POLICY ON COMPANY LETTERHEAD, WHICH CONFORMS IN FORM, SCOPE, AND CONTENT TO THE CITY'S MINIMUM NON-DISCRIMINATION AND NON-RETALIATION POLICY, AS SET FORTH HEREIN, ***OR*** *THIS NON-DISCRIMINATION AND NON-RETALIATION POLICY, WHICH HAS BEEN ADOPTED BY THE CONTRACTOR FOR ALL PURPOSES (THE FORM OF WHICH HAS BEEN APPROVED BY THE CITY'S EQUAL EMPLOYMENT/FAIR HOUSING OFFICE), WILL BE CONSIDERED THE CONTRACTOR'S NON-DISCRIMINATION AND NON-RETALIATION POLICY WITHOUT THE REQUIREMENT OF A SEPARATE SUBMITTAL. (http://austintexas.gov/page/bid-docs).*

Sanctions:

Our firm understands that non-compliance with Chapter 5-4 may result in sanctions, including termination of the contract and suspension or debarment from participation in future City contracts until deemed compliant with the requirements of Chapter 5-4.

Term:

The Contractor agrees that this Section 00630 Non-Discrimination and Non-Retaliation Certificate or the Contractor's separate conforming policy, which the Contractor has executed and filed with the Owner, will remain in force and effect for one year from the date of filing. The Contractor further agrees that, in consideration of the receipt of continued Contract payments, the Contractor's Non-Discrimination Policy will automatically renew from year-to-year for the term of the underlying Contract.

Dated this _____ day of _____, _____.

CONTRACTOR _____

Authorized Signature _____

Title _____

END

During the performance of this contract, the contractor, for itself, its assignees and successors in interest (hereinafter referred to as the "contractor") agrees as follows:

1. Compliance with Regulations: The contractor shall comply with the Regulations relative to nondiscrimination in Federally-assisted programs of the Department of Transportation (hereinafter, "DOT") Title 49, Code of Federal Regulations, Part 21, as they may be amended from time to time, (hereinafter referred to as the Regulations), which are herein incorporated by reference and made a part of this contract.

2. Nondiscrimination: The contractor, with regard to the work performed by it during the contract, shall not discriminate on the grounds of race, color, or national origin in the selection and retention of subcontractors, including procurements of materials and leases of equipment. The contractor shall not participate either directly or indirectly in the discrimination prohibited by section 21.5 of the Regulations, including employment practices when the contract covers a program set forth in Appendix B of the Regulations.

3. Solicitations for Subcontracts, Including Procurements of Materials and Equipment: In all solicitations either by competitive bidding or negotiation made by the contract for work to be performed under a subcontract, including procurements of materials or leases of equipment, each potential subcontractor or supplier shall be notified by the contractor of the contractor's obligations under this contract and the Regulations relative to nondiscrimination on the grounds of race, color, or national origin.

4. Information and Reports: The contractor shall provide all information and reports required by the Regulations or directives issued pursuant thereto, and shall permit access to its book, records, accounts, other sources of information, and its facilities as may be determined by the Recipient or the Texas Department of Transportation to be pertinent to ascertain compliance with such Regulations, orders and instructions. Where any information required of a contractor is in the exclusive possession of another who fails or refuses to furnish this information the contractor shall so certify to the Recipient, or the Texas Department of Transportation as appropriate, and shall set forth what efforts it has made to obtain the information.

5. Sanctions for Noncompliance: In the event of the contractor's noncompliance with the nondiscrimination provisions of this contract, the Recipient shall impose such contract sanctions as it or the Texas Department of Transportation may determine to be appropriate, including, but not limited to:

   (a) withholding of payments to the contractor under the contract until the contractor complies, and or (b) cancellation, termination or suspension of the contract, in whole or in part.

6. Incorporation of Provisions: The contractor shall include the provisions of paragraphs (1) through (6) in every subcontract, including procurements of materials and leases of equipment, unless exempt by the Regulations, or directives issued pursuant thereto. The contractor shall take such action with respect to any subcontract or procurement as the Recipient or the Texas Department of Transportation may direct as a means of enforcing such provisions including sanctions for non-compliance: Provided, however, that, in the event a contractor becomes involved in, or is threatened with, litigation with a subcontractor or supplier as a result of such direction, the contractor may request the Recipient to enter into such litigation to protect the

interests of the Recipient, and, in addition, the contractor may request the United States to enter into such litigation to protect the interests of the United States.

(DOT 1050.2, 08/24/71)

Contractor's full name and entity status:

_____

Signature, Authorized Representative of Contractor

_____

Title

_____

Date

END

CERTIFICATE OF INSURANCE

Section 00650

This Certificate shall be completed by a licensed insurance agent:

Name and Address of Agency:
_____
_____
_____
Phone: _____ / _____

Name and Address of Insured:
_____
_____
_____
Phone: _____ / _____

Prime or Sub-Contractor?: _____

Name of Prime Contractor, if different from Insured: _____

City of Austin Reference:
Project Name: _____
C.I.P. No.: _____
Project Location: _____
_____
Managing Dept.: _____
Contract No.: _____
Project Mgr.: _____

Insurers Affording Coverages:

Insurer A: _____

Insurer B: _____

Insurer C: _____

Insurer D: _____

INSR LTR	TYPE OF INSURANCE	POLICY NUMBER	POLICY EFFE-CTIVE DATE (MM/DD/YYYY)	POLICY EXPIR-ATION DATE (MM/DD/YYYY)	LIMITS OF LIABILITY	
	Commercial General Liability Policy As defined in the Policy, does the Policy provide:				Each Occurrence	$
					General Aggregate	$
	☐ Yes ☐ No -- Completed Operations/Products				Completed Operations /Products Aggregate	$
	☐ Yes ☐ No -- Contractual Liability				Personal & Advertising Injury	$
	☐ Yes ☐ No -- Explosion				Deductible or Self Insured Retention	$
	☐ Yes ☐ No -- Collapse					
	☐ Yes ☐ No -- Underground					
	☐ Yes ☐ No -- Contractors/ Subcontractors Work					
	☐ Yes ☐ No -- Aggregate Limits per Project Form CG 2503					
	☐ Yes ☐ No -- Additional Insured Form – CG 2010					
	☐ Yes ☐ No -- 30 Day Notice of Cancellation Form – CG 0205					
	☐ Yes ☐ No -- Waiver of Subrogation Form – CG 2404					
	Pollution/ Environmental Impairment Policy				Occurrence	$
					Aggregate	$

INSR LTR	TYPE OF INSURANCE	POLICY NUMBER	POLICY EFFE-CTIVE DATE (MM/DD/YYYY)	POLICY EXPIR-ATION DATE (MM/DD/YYYY)	LIMITS OF LIABILITY	
	Auto Liability Policy As defined in the Policy, does the Policy provide:				CSL	$
					Bodily Injury (Per Accident)	$
	☐ Yes ☐ No -- Any Auto				Bodily Injury (Per Person)	$
	☐ Yes ☐ No -- All Owned Autos				Property Damage (Per Accident)	$
	☐ Yes ☐ No -- Non-Owned Autos					
	☐ Yes ☐ No -- Hired Autos					
	☐ Yes ☐ No -- Waiver of Subrogation – CA0444					
	☐ Yes ☐ No -- 30 Day Notice of Cancellation – CA0244					
	☐ Yes ☐ No -- Additional Insured – CA2048					
	☐ Yes ☐ No -- MCS 90					
	Excess Liability ☐ Umbrella Form ☐ Excess Liability Follow Form				Occurrence	$
					Aggregate	$
	Workers Compensation and Employers Liability As defined in the Policy, does the Policy provide:				☐ Statutory	
					Each Accident	$
	☐ Yes ☐ No -- Waiver of Subrogation – WC420304				Disease – Policy Limit	$
	☐ Yes ☐ No -- 30 Day Notice of Cancellation – WC420601				Disease – Each Employee	$
	Is a Builders Risk or Installation Insurance Policy provided? ☐ Yes ☐ No					$
	☐ Yes ☐ No -- Is the City shown as loss payee/mortgagee?					
	Professional Liability As defined in the Policy, does the Policy provide:				Each Claim	$
	☐ Yes ☐ No -- 30 Day Notice of Cancellation Retroactive Date: _____				Deductible or Self Insured Retention	$

This form is for informational purposes only and certifies that policies of insurance listed above have been issued to insured named above and are in force at this time. Not withstanding any requirements, term or condition of any contract or other document with respect to which this certificate may be issued or may pertain, insurance afforded by policies described herein is subject to all terms, exclusions and conditions of such policies.

CERTIFICATE HOLDER:

DATE ISSUED: _____

City of Austin
Capital Contracting Office
P.O. Box 1088
Austin, Texas 78767

_____
AUTHORIZED REPRESENTATIVE SIGNATURE
Licensed Insurance Agent

END

TEXAS SALES AND USE TAX EXEMPTION CERTIFICATE

Section 00670

City of Austin, Texas
P.O. Box 1088
Austin, Texas 78767

CONTRACTOR/PURCHASER: _____

Street Address: _____

City, State, ZIP Code: _____

PROJECT: _____

Project Manager: _____

FDU No.: _____

CIP ID No._____

Description of items to be purchased or as described on the attached order or invoice:

_____

_____

The Contractor may purchase all labor, materials, supplies, and equipment to be incorporated in the City of Austin realty, including easements, or completely consumed at the Project jobsite and services required by or integral to the performance of the contract for the Project without paying sales or use tax in accordance with State Comptroller Rule 3.291.

Contractor/Purchaser claims this exemption for the following reason: This contract is to be performed for the City of Austin, a tax exempt entity under the Texas Tax Code.

I understand that I will be liable for payment of sales and use taxes which may become due for failure to comply with the provisions of the Tax Code. I also understand that it is a criminal offense to give an exemption certificate to the contractor for taxable items that I know, at the time of purchase, will be used in a manner other than that expressed in this certificate and depending on the amount of tax evaded, the offense may range from a Class B misdemeanor to a felony of the second degree.

City of Austin, Texas	Title	Date
Elaine Hart		
ELAINE HART	CHIEF FINANCIAL OFFICER	March 20, 2014

CONTRACTOR/PURCHASER: _____

By: _____

Title: _____

Date: _____

NOTE: This certificate cannot be issued for the purchase, lease, or rental of a motor vehicle. THIS CERTIFICATE DOES NOT REQUIRE A NUMBER TO BE VALID. Sales and Use Tax "Exemption Numbers" or "Tax Exempt" Numbers do not exist. This certificate should be furnished to the supplier. Do not send the completed certificate to the Comptroller of Public Accounts.

End

NON-USE OF ASBESTOS AFFIDAVIT (CONTRACTOR PRIOR TO CONSTRUCTION)

Section 00680

STATE OF TEXAS
COUNTY OF TRAVIS

BEFORE ME, the undersigned authority, personally appeared the Affiant who, being by me first duly sworn, upon oath deposed and stated:

"My name is _____, hereinafter known as Affiant.

"I am over the age of 18 years and I have never been convicted of a crime. I am the _____ of _____ hereinafter known as CONTRACTOR.

"I am fully competent to make this affidavit. I have personal knowledge of the facts set forth below and they are all true and correct.

"WHEREAS CONTRACTOR has submitted a bid to the City of Austin as the Prime CONTRACTOR and anticipates being awarded a contract for the construction of _____ _____, located at _____, Austin, Texas, hereinafter known as Project, for the City of Austin, Texas, hereinafter known as OWNER, and

"WHEREAS asbestos in a dust form is a recognized health hazard, and

"WHEREAS the OWNER desires not to have any asbestos containing materials used or incorporated into the construction of the Project;

"THEREFORE the CONTRACTOR affirms and understands the following:

1. The CONTRACTOR, any person, firm or organization representing or represented by the CONTRACTOR, or employed by the CONTRACTOR shall not cause or allow any material to be incorporated into the construction of the project, or allow any building material on the project site that is an asbestos containing material or any other material defined as containing asbestos by any laws, rules or regulations promulgated by the United States Government, the State of Texas or any governmental organization or agency operating under the authority of either of those entities.
2. Realizing that there might be some materials in which a satisfactory non-asbestos containing material could not be obtained, the Consultant has received prior approval from the OWNER before specifying any such asbestos containing material. Those approved materials are the only asbestos containing materials that are exempt from the above prohibition.
3. The CONTRACTOR certifies and affirms their understanding that if any asbestos containing materials not approved by the City of Austin for inclusion into the Project, are determined, as a result of any inspection and sample analysis performed by an individual(s) and/or firm(s) certified and/or licensed to perform such inspection by the United States Government and/or the State of Texas, to have been incorporated into the construction of the Project, or brought onto the site of the Project, the OWNER shall look to the CONTRACTOR for reimbursement of any and all costs incurred in the removal and/or other abatement of said asbestos containing materials.

4. CONTRACTOR further understands that OWNER shall also look to the CONTRACTOR for any and all damages to OWNER which result from the inability of the OWNER to use any portion or all of the Project due to the incorporation of asbestos containing materials that have not been approved by OWNER.
5. CONTRACTOR further understands that OWNER will pursue reimbursement of any said cost and compensation for any said damages from the CONTRACTOR by any and every means within OWNER's right and power.

Signature of Affiant:_____

STATE OF TEXAS
COUNTY OF TRAVIS

ON _____, 20_____, personally appeared _____ _____ and been duly sworn by me, subscribed to the foregoing affidavit and has stated that the facts stated therein are true and correct.

_____
Notary Public, State of Texas

_____
Printed Name of Notary

My Commission Expires: _____

End

NON-USE OF ASBESTOS AFFIDAVIT (CONTRACTOR AFTER CONSTRUCTION)

Section 00681

STATE OF TEXAS
COUNTY OF TRAVIS

BEFORE ME, the undersigned authority, personally appeared the Affiant who, being by me first duly sworn, upon oath deposed and stated:

"My name is _____, hereinafter known as Affiant.

"I am over the age of 18 years and I have never been convicted of a crime. I am the _____ of _____ hereinafter known as CONTRACTOR.

"I am fully competent to make this affidavit. I have personal knowledge of the facts set forth below and they are all true and correct.

"WHEREAS CONTRACTOR was awarded a Contract for, and was the Prime CONTRACTOR for the construction of _____ _____, located at _____, Austin, Texas, hereinafter known as Project, for the City of Austin, Texas, hereinafter known as OWNER, and

"WHEREAS asbestos in a dust form is a recognized health hazard, and

"WHEREAS the OWNER desires not to have any asbestos containing materials used or incorporated into the construction of the Project;

"THEREFORE the CONTRACTOR affirms and understands the following:

1. The CONTRACTOR, any person, firm or organization representing or represented by the CONTRACTOR, or employed by the CONTRACTOR has not caused or allowed any material to be incorporated into the construction of the project, or allowed any building material on the project site that is an asbestos containing material or any other material defined as containing asbestos by any laws, rules or regulation promulgated by the United States Government, the State of Texas or any governmental organization or agency operating under the authority of either of those entities.

2. Realizing that there were some materials in which a satisfactory non-asbestos containing material could not be obtained, the Consultant received prior approval from the OWNER before specifying any such asbestos containing material. Those approved materials were the only asbestos containing materials incorporated into the construction of the Project and are listed below, with their locations:

   _____

   _____

   _____

3. The CONTRACTOR certifies and affirms their understanding that if any asbestos containing materials not approved by the City of Austin for inclusion into the Project, are determined, as a result of any inspection and sample analysis performed by an individual(s) and/or firm(s) certified and/or licensed to perform such inspection by the United States Government and/or the State of Texas, to have been incorporated into the

construction of the Project, or brought onto the site of the Project, the OWNER shall look to the CONTRACTOR for reimbursement of any and all costs incurred in the removal and/or other abatement of said asbestos containing materials.

4. CONTRACTOR further understands that OWNER shall also look to the CONTRACTOR for any and all damages to OWNER which result from the inability of the OWNER to use any portion or all of the Project due to the incorporation of asbestos containing materials that have not been approved by OWNER.

5. CONTRACTOR further understands that OWNER will pursue reimbursement of any said cost and compensation for any said damages from the CONTRACTOR by any and every means within OWNER's right and power.

Signature of Affiant:_____

STATE OF TEXAS
COUNTY OF TRAVIS

ON _____, 20_____, personally appeared _____ _____ and been duly sworn by me, subscribed to the foregoing affidavit and has stated that the facts stated therein are true and correct.

_____
Notary Public, State of Texas

_____
Printed Name of Notary

My Commission Expires: _____

End

General Conditions Table of Contents

ARTICLE 1 - DEFINITIONS 3
ARTICLE 2 - PRELIMINARY MATTERS 6
ARTICLE 3 - CONTRACT DOCUMENTS: INTENT, AMENDING, REUSE 9
ARTICLE 4 - AVAILABILITY OF LANDS; SUBSURFACE AND PHYSICAL CONDITIONS; REFERENCE POINTS 10
ARTICLE 5 - BONDS AND INSURANCE 13
ARTICLE 6 - CONTRACTOR'S RESPONSIBILITIES 15
ARTICLE 7 - OTHER WORK 27
ARTICLE 8 - OWNER'S RESPONSIBILITIES 27
ARTICLE 9 - ENGINEER/ARCHITECT'S STATUS DURING CONSTRUCTION 28
ARTICLE 10 - CHANGES IN THE WORK 30
ARTICLE 11 - CHANGE OF CONTRACT AMOUNT 32
ARTICLE 12 - CHANGE OF CONTRACT TIMES 34
ARTICLE 13 - TESTS AND INSPECTIONS; CORRECTION, REMOVAL OR ACCEPTANCE OF DEFECTIVE WORK 37
ARTICLE 14 - PAYMENTS TO CONTRACTOR AND COMPLETION 40
ARTICLE 15 - SUSPENSION OF WORK AND TERMINATION 45
ARTICLE 16 - DISPUTE RESOLUTION 48
ARTICLE 17 - MISCELLANEOUS 50

ARTICLE 1 – DEFINITIONS

Whenever used in these General Conditions or in the other Contract Documents the following terms have the meanings indicated which are applicable to both the singular and plural thereof:

1.1 **Addendum -** Written instruments issued by the Contract Awarding Authority which clarify, correct or change the bidding requirements or the Contract Documents prior to the Due Date. "Addenda" is the plural form of Addendum.

1.2 **Agreement -** Prescribed form, Section 00500.

1.3 **Alternative Dispute Resolution -** The process by which a disputed Claim may be settled if the OWNER and the CONTRACTOR cannot reach an agreement between themselves, as an alternative to litigation.

1.4 **Bid -** A complete, properly signed response to an Invitation for Bid that, if accepted, would bind the Bidder to perform the resultant Contract.

1.5 **Bidder -** A person, firm, or entity that submits a Bid in response to a Solicitation. Any Bidder may be represented by an agent after submitting evidence demonstrating the agent's authority. The agent cannot certify as to his own agency status.

1.6 **Bid Documents -** The advertisement or Invitation for Bids, instructions to Bidders, the Bid form, the Contract Documents and Addenda.

1.7 **Calendar Day -** Any day of the week; no days being excepted. Work on Saturdays, Sundays, and/or Legal Holidays shall be coordinated with OWNER.

1.8 **Change Directive -** A written directive to CONTRACTOR, signed by OWNER, ordering a change in the Work and stating a proposed basis for adjustment, if any, in the Contract Amount or Contract Time, or both. A Change Directive may be used in the absence of total agreement on the terms of a Change Order. A Change Directive does not change the Contract Amount or Contract Time, but is evidence that the parties expect that the change directed or documented by a Change Directive will be incorporated in a subsequently issued Change Order.

1.9 **Change Orders -** Written agreements entered into between CONTRACTOR and OWNER authorizing an addition, deletion, or revision to the Contract, issued on or after the Execution Date of the Agreement.

1.10 **Claim -** A written demand seeking, as a matter of right, adjustment or interpretation of Contract terms, payment of money, extension of time or other relief with respect to the terms of the Contract.

1.11 **Contract -** The binding legal agreement between the OWNER and the CONTRACTOR. The Contract represents the entire and integrated agreement between OWNER and CONTRACTOR for performance of the Work, as evidenced by the Contract Documents.

1.12 **Contract Amount -** The moneys payable by OWNER to CONTRACTOR for completion of the Work in accordance with the Contract Documents.

1.13 **Contract Awarding Authority -** A City department authorized to enter into Contracts on behalf of the City.

1.14 **Contract Documents -** Project Manual, Drawings, Addenda and Change Orders.

1.15 **Contract Time -** The number of days allowed for completion of the Work as defined by the Contract. When any period is referred to in days, it will be computed to exclude the first and include the last day of such period. A day of twenty-four hours measured from midnight to the next midnight will constitute a day.

1.16 **CONTRACTOR -** The individual, firm, corporation, or other business entity with whom OWNER has entered into the Contract for performance of the Work.

1.17 Critical Path - The longest series of tasks that runs consecutively from the beginning to the end of the project, as determined by duration and workflow sequence. This longest path sets the managerial standard for how quickly a project can be completed, given appropriate resources.

1.18 Drawings - Those portions of the Contract Documents which are graphic representations of the scope, extent and character of the Work to be furnished and performed by CONTRACTOR and which have been approved by OWNER. Drawings may include plans, elevations, sections, details, schedules and diagrams. Shop Drawings are not Drawings as so defined.

1.19 Due Date - The date and time specified for receipt of Bids.

1.20 Engineer/Architect (E/A) - The OWNER's design professional identified as such in the Contract. The titles of "Architect/Engineer," "Architect" and "Engineer" used in the Contract Documents shall read the same as Engineer/Architect (E/A). Nothing contained in the Contract Documents shall create any contractual or agency relationship between E/A and CONTRACTOR.

1.21 Equal - The terms "equal" or "approved equal" shall have the same meaning.

1.22 Execution Date - Date of last signature of the parties to the Agreement.

1.23 Field Order - A written order issued by Owner's Representative which orders minor changes in the Work and which does not involve a change in the Contract Amount or the Contract Time.

1.24 Final Completion - The point in time when OWNER determines that all Work has been completed and final payment to CONTRACTOR will be made in accordance with the Contract Documents.

1.25 Force Account - a basis of payment for the direct performance of Work with payment based on the actual cost of the labor, equipment and materials furnished and consideration for overhead and profit as set forth in Section 11.5.

1.26 Inspector - The authorized representative of any regulatory agency that has jurisdiction over any portion of the Work.

1.27 Invitation for Bid (IFB) - a Solicitation requesting pricing for a specified Good or Service which has been advertised for Bid in a newspaper and/or the Internet.

1.28 Legal Holidays

1.28.1 The following are recognized by the OWNER:

Holiday	Date Observed
New Year's Day	January 1
Martin Luther King, Jr.'s Birthday	Third Monday in January
President's Day	Third Monday in February
Memorial Day	Last Monday in May
Independence Day	July 4
Labor Day	First Monday in September
Veteran's Day	November 11
Thanksgiving Day	Fourth Thursday in November
Friday after Thanksgiving	Friday after Thanksgiving
Christmas Eve	December 24
Christmas Day	December 25

1.28.2 If a Legal Holiday falls on Saturday, it will be observed on the preceding Friday. If a Legal Holiday falls on Sunday, it will be observed on the following Monday.

1.28.3 Christmas Eve is observed only if it falls on a Monday through Thursday. If Christmas Eve falls on a Friday, that day is observed as the Christmas Day holiday.

1.29 Milestones - A significant event specified in the Contract Documents relating to an intermediate completion date or time prior to Substantial Completion of all the Work.

1.30 Notice to Proceed - A Written Notice given by OWNER to CONTRACTOR fixing the date on which the Contract Times will commence to run and on which CONTRACTOR shall start to perform CONTRACTOR's obligations under the Contract Documents.

1.31 OWNER - City of Austin, Texas, a municipal corporation, home rule city and political subdivision organized and existing under the laws of the State of Texas, acting through the City Manager or his/her designee, officers, agents or employees to administer design and construction of the Project.

1.32 Owner's Representative - The designated representative of the OWNER. The Owner's Representative will be identified at the pre-construction conference.

1.33 Partial Occupancy or Use - Use by OWNER of a substantially completed part of the Work for the purpose for which it is intended (or a related purpose) prior to Substantial Completion of all the Work, provided OWNER and CONTRACTOR have accepted in writing the responsibilities assigned to each of them for payments, retainage if any, security, maintenance, utilities, corrective work, insurance and warranties.

1.34 Project - The subject of the Work and its intended result.

1.35 Project Manual - That portion of the Contract Documents which may include the following: introductory information; bidding requirements, Contract forms and General and Supplemental General Conditions; General Requirements; Specifications; Drawings; MBE/WBE or DBE Procurement Program Package; Project Safety Manual; and Addenda.

1.36 Resident Project Representative - The authorized representative of E/A who may be assigned to the site or any part thereof.

1.37 Shop Drawings - All drawings, diagrams, illustrations, schedules and other data or information which are specifically prepared or assembled by or for CONTRACTOR and submitted by CONTRACTOR as required by the Contract Documents.

1.38 Specifications - Those portions of the Contract Documents consisting of written technical descriptions as applied to the Work, which set forth to CONTRACTOR, in detail, the requirements which must be met by all materials, equipment, construction systems, standards, workmanship, equipment and services in order to render a completed and useful project.

1.39 Solicitation - Solicitation means, as applicable, an Invitation for Bid or a Request for Proposal.

1.40 Substantial Completion - The stage in the progress of the Work when the Work, or designated portion thereof, is sufficiently complete in accordance with the Contract Documents so OWNER can occupy or utilize the Work for its intended use, as evidenced by a Certificate of Substantial Completion approved by OWNER.

1.41 Subcontractor - An individual, firm, corporation, or other business entity having a direct contract with CONTRACTOR for the performance of a portion of the Work under the Contract.

1.42 Sub-Subcontractor - A person or entity who has a direct or indirect contract with a Subcontractor to perform a portion of the work.

1.43 Superintendent - The representative of CONTRACTOR authorized in writing to receive and fulfill instructions from the Owner's Representative, and who shall supervise and direct construction of the Work.

1.44 Supplemental General Conditions - The part of the Contract Documents which amends or supplements the General Conditions. All General Conditions which are not so amended or supplemented remain in full force and effect.

1.45 Supplier - An individual or entity having a direct contract with CONTRACTOR or with any Subcontractor to furnish materials or equipment to be incorporated in the Work by CONTRACTOR or any Subcontractor.

1.46 Time Extension Request - An approved request for time extension on a form acceptable to OWNER.

1.47 Work - The entire completed construction, or the various separately identifiable parts thereof, required to be furnished under the Contract Documents.

1.48 Working Day - Any day of the week, not including Saturdays, Sundays, or Legal Holidays in which conditions under the CONTRACTOR's control will permit work for a continuous period of not less than seven (7) hours between 7:00 a.m. and 6:00 p.m. Upon agreement with Owner's Representative, work on Saturdays, Sundays and/or Legal Holidays may be allowed and will be considered a Working Day.

1.49 Working Hours

1.49.1 Working Day Contract: All Work shall be done between 7:00 a.m. and 6:00 p.m. unless authorized by Owner's Representative. However, emergency work may be done without prior permission as indicated in paragraph 6.11.5. If night Work is authorized and conditions under CONTRACTOR's control will permit Work for a continuous period of not less than seven (7) hours between 12:00 a.m. and 11:59 p.m. it will be considered a Working Day. Night Work may be revoked at any time by OWNER if CONTRACTOR fails to maintain adequate equipment and supervision for the prosecution and control of the night Work.

1.49.2 Calendar Day Contract: All Work shall be done between 7:00 a.m. and 6:00 p.m. unless authorized by Owner’s Representative. However, emergency work may be done without prior permission as indicated in paragraph 6.11.5. Night Work may be revoked at any time by OWNER if CONTRACTOR fails to maintain adequate equipment and supervision for the prosecution and control of the night Work.

1.50 Written Notice - Written communication between OWNER and CONTRACTOR. Written Notice shall be deemed to have been duly served if delivered in person to Owner's Representative or CONTRACTOR's duly authorized representative, or if delivered at or sent by registered or certified mail to the attention of Owner's Representative or CONTRACTOR's duly authorized representative at the last business address known to the party giving notice.

ARTICLE 2 - PRELIMINARY MATTERS

2.1 Delivery of Agreement, Bonds, Insurance, etc.: Within five (5) Working Days after written notification of award of Contract, CONTRACTOR shall deliver to OWNER signed Agreement, Bond(s), Insurance Certificate(s) and other documentation required for execution of Contract.

2.2 Copies of Documents: OWNER shall furnish to CONTRACTOR one (1) Project Manual with original signatures, one (1) copy of the executed Project Manual, one (1) set of Drawings

and one (1) copy of the Contract Documents in .pdf format. Additional copies will be furnished, upon request, at the cost specified in the Supplemental General Conditions."

2.3 Commencement of Contract Times; Notice to Proceed: The Contract Time(s) will begin to run on the day indicated in the Notice to Proceed. Notice to Proceed will be given at any time within sixty (60) calendar days after the Execution Date of the Agreement, unless extended by written agreement of the parties.

2.4 Before Starting Construction:

2.4.1 No Work shall be done at the site prior to the preconstruction conference without OWNER's approval. Before undertaking each part of the Work, CONTRACTOR shall carefully study the Contract Documents to check and verify pertinent figures shown thereon compare accurately to all applicable field measurements. CONTRACTOR shall promptly report in writing to Owner's Representative any conflict, error, ambiguity or discrepancy which CONTRACTOR may discover and shall obtain a written interpretation or clarification from Owner's Representative before proceeding with any Work affected thereby. CONTRACTOR shall be liable to OWNER for failure to report any conflict, error, ambiguity or discrepancy in the Contract Documents of which CONTRACTOR knew or reasonably should have known.

2.4.2 It is mutually agreed between CONTRACTOR and OWNER that successful completion of the Work within the Contract completion date is of primary importance. Therefore, the CONTRACTOR hereby agrees to submit to the Owner's Representative for review and approval, or acceptance, as appropriate, all information requested within this section, including a Baseline Schedule, no later than five working days prior to the preconstruction conference. The Owner's Representative will schedule the preconstruction conference upon the timely submittal of the required documents, unless time is extended by written mutual agreement. CONTRACTOR will submit the following:

.1 A proposed Baseline Schedule developed using Microsoft Project software, unless otherwise approved by Owner's Representative ("Baseline Schedule") to confirm that all Work will be completed within the Contract time. The Baseline Schedule must (i) indicate the times (number of days or dates) for starting and completing the various stages of the Work, including any Milestones specified in the Contract Documents, (ii) identify the Critical Path for completing the Work, (iii) identify when all Subcontractors will be utilized, and (iv) take into consideration any limitations on Working Hours, including baseline Rain Days on Calendar Day Contracts, and (v) be prepared accordance with Section 01310, Schedules and Reports, if applicable; otherwise in accordance with Section 01300, Submittals. This Baseline Schedule, a copy of which shall be made available at the job site(s), must contain sufficient detail to indicate that the CONTRACTOR has properly identified required Work elements and tasks, has provided for a sufficient and proper workforce and integration of Subcontractors, has provided sufficient resources and has considered the proper sequencing of the Work required to result in a successful Project that can be completed within the Contract time;

.2 An organizational chart showing the principals and management personnel who will be involved with the Work, including each one's responsibilities for the Work;

.3 To the extent not set forth in the Section 00400 Statement of Contractor's Experience, a complete listing of the CONTRACTOR's employees proposed for the Work. List each one by name and job title, and show length of employment with CONTRACTOR;

.4 To the extent not set forth in the Section 00410 Statement of Bidder's Safety Experience, a discussion and confirmation of the CONTRACTOR's commitment to safety by providing a copy of its employee's safety handbook and the safety records for the past three years of CONTRACTOR's proposed project manager and Superintendent;

.5 A preliminary schedule of Shop Drawing and sample submittals;

.6 A preliminary schedule of values for all of the Work, subdivided into component parts in sufficient detail to serve as the basis for progress payments during construction. Such prices will be deemed to include an appropriate amount of overhead and profit applicable to each item of Work;

.7 To the extent not set forth in the Section 00400 Statement of Contractor's Experience, a letter designating CONTRACTOR's Superintendent and project manager, and a confirmation of past project experience for the CONTRACTOR's Superintendent and project manager specifically intended for the Work;

.8 A letter from CONTRACTOR and Subcontractor(s) listing salaried specialists. A salaried specialist is anyone except an hourly worker whose wage rate is governed by Section 00830 of this agreement;

.9 A letter designating the "Competent Person(s)" on general safety and excavation safety measures along with certifications or other documentation of the safety representative's qualifications;

.10 If applicable, an excavation safety system plan;

.11 If applicable, a plan illustrating proposed locations of temporary facilities;

.12 A completed Non-Use of Asbestos Affidavit (Prior to Construction);

.13 A letter designating the Texas Registered Professional Land Surveyor for layout of the Work, if the Work requires the services of a surveyor; and

.14 Appropriate safety training certificates for workers that will initially be on site;

.15 A certificate of worker's compensation insurance coverage for all persons providing services on the Project (refer to 5.2.1.3 in Section 00700 for definition of persons providing services on the Project);

.16 A Construction Equipment Emissions Reduction Plan.

2.4.3 Neither the acceptance nor the approval of any of the submittals required in paragraph 2.4.2, above, will constitute the adoption, affirmation, or direction of the CONTRACTOR'S means and methods.

2.5 **Preconstruction Conference:** Prior to commencement of Work at the site, CONTRACTOR must attend a preconstruction conference with Owner's Representative and others, as set forth in Division 1. Additionally, prior to commencement of work, the CONTRACTOR shall host a preconstruction conference for the Subcontractors identified on the originally approved compliance plan, Owner's Representative and others, as set forth in Division 1. The CONTRACTOR shall notify all Subcontractors five (5) working days prior to the preconstruction conference. If the CONTRACTOR has included Subcontractors in the initial preconstruction conference, the additional Subcontractor preconstruction conference will not be required.

2.6 **Initially Acceptable Schedules:** Unless otherwise provided in the Contract Documents, CONTRACTOR shall obtain approval of Owner's Representative on the Baseline Schedule submitted in accordance with paragraph 2.4.2.1 and Division 1 before the first progress payment will be made to CONTRACTOR. The Baseline Schedule must provide for an orderly

progression of the designated portion of the Work to completion within any specified Milestones and Contract Times. Acceptance of the schedule by Owner's Representative will neither impose on Owner's Representative responsibility or liability for the sequencing, scheduling or progress of the Work nor interfere with or relieve CONTRACTOR from CONTRACTOR's full responsibility for such Work. CONTRACTOR's schedule of Shop Drawings and sample submissions must provide an acceptable basis for reviewing and processing the required submittals. CONTRACTOR's schedule of values must conform to the requirements set forth in Division 1.

ARTICLE 3 - CONTRACT DOCUMENTS: INTENT, AMENDING, REUSE

3.1 Intent:

3.1.1 The intent of the Contract Documents is to include all information necessary for the proper execution and timely completion of the Work by CONTRACTOR. The CONTRACTOR will execute the Work described in and reasonably inferable from the Contract Documents as necessary to produce the results indicated by the Contract Documents. The Contract Documents are complementary, and what is required by one shall be as binding as if required by all. In cases of disagreement, the following order of precedence shall generally govern (top item receiving priority of interpretation):

Signed Agreement
Addendum to the Contract Documents, including approved changes
Supplemental General Conditions
General Conditions
Other Bidding Requirements and Contract Forms
Special Provisions to the Standard Technical Specifications
Special Specifications
Standard Technical Specifications
Drawings (figured dimensions shall govern over scaled dimensions)
Project Safety Manual (if applicable),

with the understanding that a common sense approach will be utilized as necessary so that the Contract Documents produce the intended response.

3.1.2 Unless otherwise stated in the Contract Documents, words that have well-known technical or construction industry meanings are used in the Contract Documents in accordance with such recognized meanings.

3.2 Reporting and Resolving Discrepancies: If, during the performance of the Work, CONTRACTOR discovers any conflict, error, ambiguity or discrepancy within the Contract Documents or between the Contract Documents and any provisions of any such law or regulation applicable to the performance of the Work or of any such standard, specification, manual or code or instructions of any Supplier, CONTRACTOR shall report it to Owner's Representative in writing at once, and CONTRACTOR shall not proceed with the Work affected thereby until an amendment or supplement to the Contract Documents has been issued by one of the methods indicated in paragraph 3.3.1 or 3.3.2. CONTRACTOR shall be liable to OWNER for failure to report any such conflict, error, ambiguity or discrepancy of which CONTRACTOR knew or reasonably should have known.

3.3 Amending and Supplementing Contract Documents:

3.3.1 The Contract Documents may be amended to provide for additions, deletions and revisions in the Work or to modify the terms and conditions thereof in one or more of the following ways:

.1 Change Order.

.2 Change Directive.

.3 Time Extension Request.

3.3.2 In addition, the requirements of the Contract Documents may be supplemented, and minor variations and deviations in the Work may be authorized, in one or more of the following ways:

.1 Field Order.

.2 Review of a Shop Drawing or sample.

.3 Written interpretation or clarification.

3.4 Reuse of Documents Prohibited: CONTRACTOR and any Subcontractor or Supplier or other person or organization performing or furnishing any of the Work under a direct or indirect contract with OWNER: (i) shall not have or acquire any title to or ownership rights in any of the Drawings, Specifications or other documents (or copies of any thereof) prepared by or bearing the seal of E/A or E/A's consultant, and (ii) shall not reuse any of such Drawings, Specifications, other documents or copies on extensions of the Project or any other project without written consent of OWNER and E/A.

3.5 In the event of the breach by the OWNER or CONTRACTOR of any of its obligations under the Contract, so as to support a claim by the other party, the provisions of this Contract will be equitably construed to allow the resolution of such a claim and all of the other provisions of this Contract shall continue in full force and effect as to the rights, responsibilities, and remedies of the OWNER and CONTRACTOR.

ARTICLE 4 - AVAILABILITY OF LANDS; SUBSURFACE AND PHYSICAL CONDITIONS; REFERENCE POINTS

4.1 **Availability of Lands:** The OWNER will provide access to all land and interests in land required for the Work and will notify CONTRACTOR of any restrictions in such access. CONTRACTOR may make a claim if OWNER fails to provide timely access to the Work. CONTRACTOR must obtain any additional temporary construction facilities, stockpiling or storage sites not otherwise provided.

4.2 **Subsurface and Physical Conditions:**

4.2.1 CONTRACTOR specifically represents that it has carefully examined the plans, the geotechnical report, if any, and the site of the proposed Work and is thoroughly familiar with all of the conditions surrounding construction of the Project, having had the opportunity to conduct any and all additional inquiry, tests and investigation that he/she deems necessary and proper. CONTRACTOR acknowledges the receipt of the geotechnical report, if any, and agrees that the report, while it is an accurate record of the geotechnical conditions at the boring locations, is not a guarantee of specific site conditions which may vary between boring locations.

4.2.2 CONTRACTOR must notify OWNER in writing as soon as reasonably possible, but no later than three (3) calendar days, if unforeseen conditions are encountered at the site which are (i) subsurface or otherwise concealed physical conditions that differ materially from those indicated in the Contract Documents or (ii) unknown physical conditions of an unusual nature, that differ materially from those normally encountered in the type of work being performed under this Contract. CONTRACTOR may not disturb the conditions until OWNER conducts an investigation. Owner's Representative and E/A will promptly investigate such

conditions with E/A. If it is determined that such conditions differ materially and cause an increase or decrease in the CONTRACTOR's cost of or time required for performance of any part of the Work, Owner's Representative will recommend an equitable adjustment in the Contract Amount or Contract Time, or both. If it is determined that such conditions are not materially different from those indicated in the Contract Documents, Owner's Representative will notify CONTRACTOR in writing of such findings and the Contract will not be adjusted. CONTRACTOR may dispute such a determination in accordance with Article 16.

4.2.3 Notwithstanding any other provision of this Contract, CONTRACTOR is solely responsible for the location and protection of any and all public utility lines and utility customer service lines in the Work area. "Public utility lines" means the utility distribution and supply system, and "utility customer service lines" means the utility lines connecting customers to the utility distribution and collection system. Generally, existing utility customer service line connections are not shown on the Drawings. CONTRACTOR shall notify "One Call" and exercise due care to locate, mark, uncover and otherwise protect all such lines in the construction zone and any of CONTRACTOR's work or storage areas. CONTRACTOR's responsibility for the location and protection of utilities is primary and nondelegable. CONTRACTOR shall indemnify or reimburse such expenses or costs (including fines that may be levied against OWNER) that may result from unauthorized or accidental damage to all public lines and utility customer service lines in the work area. OWNER reserves the right to repair any damage CONTRACTOR causes to such utilities at CONTRACTOR's expense. If a public line and/or customer service line is damaged by CONTRACTOR, CONTRACTOR shall give verbal notice within one (1) hour and written notice within twenty-four (24) hours to the Owner's Representative.

4.2.4 CONTRACTOR shall take reasonable precaution to avoid disturbing primitive records and antiquities of archaeological, paleontological or historical significance. No objects of this nature shall be disturbed without written permission of OWNER and Texas Historical Commission. When such objects are uncovered unexpectedly, CONTRACTOR shall stop all Work in close proximity and notify Owner's Representative and Texas Historical Commission of their presence and shall not disturb them until written permission and permit to do so is granted. All primitive rights and antiquities uncovered on OWNER's property shall remain property of State of Texas, Texas Historical Commission conforming to Texas Natural Resources Code. If it is determined by OWNER, in consultation with Texas Historical Commission, that exploration or excavation of primitive records or antiquities on Project site is necessary to avoid loss, CONTRACTOR shall cooperate in salvage work attendant to preservation. If the Work stoppage or salvage work causes an increase in CONTRACTOR's cost of, or time required for, performance of the Work, the Contract Amount and/or Contract Time will be equitably adjusted.

4.3 Reference Points: Unless otherwise specified, all control lines and bench marks suitable for use in layout will be furnished by OWNER. Lay out of the Work shall be performed in accordance with Division 1. Controls, bench marks and property boundary markers shall be carefully preserved by CONTRACTOR by use of flags, staffs or other visible devices and in case of destruction or removal by CONTRACTOR or its employees, such controls and bench marks shall be replaced by a Registered Professional Land Surveyor at CONTRACTOR's expense. City of Austin survey monuments damaged by CONTRACTOR will be reestablished by OWNER at CONTRACTOR's expense.

4.4 Hazardous Materials:

4.4.1 To the extent provided by applicable law, OWNER shall be responsible for any hazardous material uncovered or revealed at the site which was not shown,

indicated or identified in the Contract Documents to be within the scope of the Work and which may present a substantial danger to persons or property exposed thereto in connection with the Work at the site. CONTRACTOR shall immediately notify Owner's Representative of any suspected hazardous materials encountered before or during performance of the Work and shall take all necessary precautions to avoid further disturbance of the materials.

4.4.2 CONTRACTOR shall be responsible for any hazardous materials brought to the site by CONTRACTOR, Subcontractor, Suppliers or anyone else for whom CONTRACTOR is responsible.

4.4.3 No asbestos-containing materials shall be incorporated into the Work or brought on Project site without prior approval of OWNER. The CONTRACTOR shall not knowingly use, specify, request or approve for use any asbestos containing materials or lead-based paint without the OWNER'S written approval. When a specific product is specified, the CONTRACTOR shall endeavor to verify that the product does not include asbestos containing material.

4.4.4 Refer to Division 1 for hazardous material definitions and procedures.

.1 Unless otherwise expressly provided in the Contract Documents to be part of the Work, CONTRACTOR is not responsible for any unexpected Hazardous Materials encountered at the site. Upon encountering any Hazardous Conditions, CONTRACTOR must stop Work immediately in the affected area and duly notify OWNER and, if required by applicable law or regulations, all government or quasi-government entities with jurisdiction over the Project or site.

.2 Upon receiving notice of the presence of suspected Hazardous Materials, OWNER shall take the necessary measures required to ensure that the Hazardous Materials are remediated or rendered harmless. Such necessary measures shall include OWNER retaining qualified independent experts to (i) ascertain whether Hazardous Materials have actually been encountered, and, if they have been encountered, (ii) prescribe the remedial measures that OWNER must take either to remove the Hazardous Materials or render the Hazardous Materials harmless.

.3 CONTRACTOR shall be obligated to resume Work at the affected area of the Project only after OWNER's Representative provides written certification that (i) the Hazardous Materials have been removed or rendered harmless and (ii) all necessary approvals have been obtained from all government and quasi-government entities having jurisdiction over the Project or site. The CONTRACTOR shall be responsible for continuing the Work in the unaffected portion of the Project and site.

.4 CONTRACTOR will be entitled, in accordance with these General Conditions, to an adjustment in its Contract Amount and/or Contract Time(s) to the extent CONTRACTOR's cost and/or time of performance have been adversely impacted by the presence of Hazardous Materials.

.5 Notwithstanding the preceding provisions of this Section 4.1, OWNER is not responsible for Hazardous Materials introduced to the Site by CONTRACTOR, Subcontractors or anyone for whose acts they may be liable. CONTRACTOR shall indemnify, defend and hold harmless OWNER and OWNER's officers, directors, employees and agents from and against all claims, losses, damages, liabilities and expenses, including attorneys' fees and expenses, arising out of or resulting from those hazardous materials introduced to the site by CONTRACTOR, Subcontractors or anyone for whose acts they may be liable.

4.4.5 CONTRACTOR shall be responsible for use, storage and remediation of any hazardous materials brought to the Site by CONTRACTOR, Subcontractors, Suppliers or anyone else for whom CONTRACTOR is responsible.

ARTICLE 5 - BONDS AND INSURANCE

5.1 Surety and Insurance Companies: All bonds and insurance required by the Contract Documents shall be obtained from solvent surety or insurance companies that are duly licensed by the State of Texas and authorized to issue bonds or insurance policies for the limits and coverages required by the Contract Documents. The bonds shall be in a form acceptable to OWNER and shall be issued by a surety which complies with the requirements of Texas Insurance Code, Title 12, Chapter 3503. The surety must obtain reinsurance for any portion of the risk that exceeds 10% of the surety's capital and surplus. For bonds exceeding $100,000, the surety must also hold a certificate of authority from the U.S. Secretary of the Treasury or have obtained reinsurance for any liability in excess of $1,000,000 from a reinsurer that is authorized as a reinsurer in Texas or holds a certificate of authority from the U.S. Secretary of the Treasury. In the event that the proposed surety for a contract award in excess of $100,000 does not hold a certificate of authority from the U.S. Secretary of the Treasury and/or its proposed reinsurer does not hold a certificate of authority from the U.S. Secretary of the Treasury, the OWNER may require additional financial solvency information from the Bidder/Contractor and the proposed surety company and/or reinsurer as part of the 00400 Statement of Bidders Experience and determination of bidder responsibility in the award of the Contract.

5.2 Workers' Compensation Insurance Coverage:

5.2.1 Definitions:

.1 Certificate of coverage ("certificate") - A copy of a certificate of insurance, a certificate of authority to self-insure issued by the commission, or a coverage agreement (DWC-81, DCW-82, DCW-83, or DCW84), showing statutory workers' compensation insurance coverage for the person's or entity's employees providing services on the Project, for the duration of the Project.

.2 Duration of the Project - includes the time from the beginning of the Work on the Project until the CONTRACTOR's/ person's Work on the Project has been completed and accepted by OWNER.

.3 Persons providing services on the Project ("subcontractor" in Texas Labor Code, Section 406.096) - includes all persons or entities performing all or part of the services the CONTRACTOR has undertaken to perform on the Project, regardless of whether that person contracted directly with the CONTRACTOR and regardless of whether that person has employees. This includes, without limitation, independent contractors, Subcontractors, leasing companies, motor carriers, owner-operators, employees of any such entity, or employees of any entity which furnishes persons to provide services on the Project. "Services" include, without limitation, providing, hauling, or delivering equipment or materials, or providing labor, transportation, or other service related to a project. "Services" does not include activities unrelated to the Project, such as food/beverage vendors, office supply deliveries, and delivery of portable toilets.

5.2.2 CONTRACTOR shall provide coverage, based on proper reporting of classification codes and payroll amounts and filing of any coverage agreements, which meets the statutory requirements of Texas Labor Code, Section 401.011(44) for all

employees of the CONTRACTOR providing services on the Project, for the duration of the Project.

5.2.3 CONTRACTOR must provide a certificate of coverage to OWNER prior to being awarded the Contract.

5.2.4 If the coverage period shown on the CONTRACTOR's current certificate of coverage ends during the duration of the Project, the CONTRACTOR must, prior to the end of the coverage period, file a new certificate of coverage with OWNER showing that coverage has been extended.

5.2.5 CONTRACTOR shall obtain from each person providing services on the Project, and provide to OWNER:

.1 A certificate of coverage, prior to that person beginning Work on the Project, so OWNER will have on file certificates of coverage showing coverage for all persons providing services on the Project; and

.2 No later than seven (7) days after receipt by CONTRACTOR, a new certificate of coverage showing extension of coverage, if the coverage period shown on the current certificate of coverage ends during the duration of the Project.

5.2.6 CONTRACTOR shall retain all required certificates of coverage for the duration of the Project and for one (1) year thereafter.

5.2.7 CONTRACTOR shall notify OWNER in writing by certified mail or personal delivery, within ten (10) days after CONTRACTOR knew or should have known, of any change that materially affects the provision of coverage of any person providing services on the Project.

5.2.8 CONTRACTOR shall post on each Project site a notice, in the text, form and manner prescribed by the Texas Workers' Compensation Commission, informing all persons providing services on the Project that they are required to be covered, and stating how a person may verify coverage and report lack of coverage.

5.2.9 CONTRACTOR shall contractually require each person with whom it contracts to provide services on a Project, to:

.1 Provide coverage, based on proper reporting of classification codes and payroll amounts and filing of any coverage agreements, which meets the statutory requirements of Texas Labor Code, Section 401.011(44) for all of its employees providing services on the Project, for the duration of the Project;

.2 Provide to CONTRACTOR, prior to that person beginning Work on the Project, a certificate of coverage showing that coverage is being provided for all employees of the person providing services on the Project, for the duration of the Project;

.3 Provide CONTRACTOR, prior to the end of the coverage period, a new certificate of coverage showing extension of coverage, if the coverage period shown on the current certificate of coverage ends during the duration of the Project;

.4 Obtain from each other person with whom it contracts, and provide to CONTRACTOR: a) a certificate of coverage, prior to the other person beginning Work on the Project; and b) a new certificate of coverage showing extension of coverage, prior to the end of the coverage period, if the coverage period shown on the current certificate of coverage ends during the duration of the Project;

.5 Retain all required certificates of coverage on file for the duration of the Project and for one (1) year thereafter;

.6 Notify OWNER in writing by certified mail or personal delivery, within ten (10) days after the person knew or should have known, of any change that materially affects the provision of coverage of any person providing services on the Project; and

.7 Contractually require each person with whom it contracts, to perform as required by paragraphs 5.2.9.1 - 5.2.9.7, with the certificates of coverage to be provided to the person for whom they are providing services.

5.2.10 By signing this Contract or providing or causing to be provided a certificate of coverage, CONTRACTOR is representing to OWNER that all employees of the CONTRACTOR who will provide services on the Project will be covered by workers' compensation coverage for the duration of the Project, that the coverage will be based on proper reporting of classification codes and payroll amounts, and that all coverage agreements will be filed with the appropriate insurance carrier or, in the case of a self-insured, with the Texas Worker's Compensation Commission's Division of Self- Insurance Regulation. Providing false or misleading information may subject CONTRACTOR to administrative penalties, criminal penalties, civil penalties, or other civil actions.

5.2.11 CONTRACTOR's failure to comply with any of these provisions is a breach of Contract by CONTRACTOR which entitles OWNER to declare the Contract void if CONTRACTOR does not remedy the breach within ten (10) days after receipt of notice of breach from OWNER.

5.3 Other Bond and Insurance Requirements: For additional insurance requirements, refer to the Supplemental General Conditions.

5.4 Bonds:

5.4.1 General.

.1 Bonds, when required, shall be executed on forms furnished by or acceptable to OWNER. All bonds signed by an agent must be accompanied by a certified copy of such agent's authority to act.

.2 If the surety on any bond furnished by CONTRACTOR is declared bankrupt or becomes insolvent or its right to do business is terminated in the State of Texas or it ceases to meet the requirements of the preceding paragraph, CONTRACTOR shall within ten (10) days thereafter substitute another bond and surety, both of which must be acceptable to OWNER.

.3 When Performance Bonds and/or Payment Bonds are required, each shall be issued in an amount of one hundred percent (100%) of the Contract Amount as security for the faithful performance and/or payment of all CONTRACTOR's obligations under the Contract Documents. Performance Bonds and Payment Bonds shall be issued by a solvent surety company authorized to do business in the State of Texas, and shall meet any other requirements established by law or by OWNER pursuant to applicable law. Any surety duly authorized to do business in Texas may write Performance and Payment Bonds on a project without reinsurance to the limit of ten percent (10%) of its capital and surplus. Such a surety must reinsure any obligations over ten percent (10%).

5.4.2 Performance Bond.

.1 If the Contract Amount exceeds $100,000, CONTRACTOR shall furnish OWNER with a Performance Bond in the form set out in Section 00610.

.2 If the Contract Amount exceeds $25,000 but is less than or equal to $100,000, CONTRACTOR shall furnish OWNER with a Performance Bond in the form set out in Section 00610, unless the original Contract Time is 60 Calendar

Days/40 Working Days or less, in which case CONTRACTOR can agree to the following terms and conditions for payment in lieu of providing a Performance Bond: no moneys will be paid to CONTRACTOR until completion and acceptance of the Work by OWNER; CONTRACTOR shall be entitled to receive 95% of the Contract Amount following Final Completion, and the remaining 5% of the Contract Amount following the one (1) year warranty period.

.3 If the Contract Amount is less than or equal to $25,000, CONTRACTOR will not be required to furnish a Performance Bond; provided that no moneys will be paid to CONTRACTOR until completion and acceptance of the Work by OWNER under the following terms and conditions: CONTRACTOR shall be entitled to receive 95% of the Contract Amount following Final Completion, and the remaining 5% of the Contract Amount following the one (1) year warranty period.

.4 If a Performance Bond is required to be furnished, it shall extend for the one (1) year warranty period.

5.4.3 Payment Bond.

.1 If the Contract Amount exceeds $50,000, CONTRACTOR shall furnish OWNER with a Payment Bond in the form set out in Section 00620.

.2 If the Contract Amount is less than or equal to $50,000, CONTRACTOR will not be required to furnish a Payment Bond; provided that no moneys will be paid to CONTRACTOR until completion and acceptance of the Work by OWNER under the terms and conditions specified in paragraph 5.4.2.3.

5.4.4 **Maintenance Bond:** If the Contract Documents contemplate a period of maintenance beyond the one (1) year contractual warranty period, OWNER agrees that any bond to be required for such maintenance work will be in the amount of the maintenance work during any extended maintenance period.

ARTICLE 6 - CONTRACTOR'S RESPONSIBILITIES

6.1 Supervision and Superintendence:

6.1.1 CONTRACTOR shall supervise, inspect and direct the Work competently and efficiently, devoting such attention thereto and applying such skills and expertise as may be necessary to perform the Work in accordance with the Contract Documents. CONTRACTOR shall be solely responsible for the means, methods, techniques, sequences and procedures of construction. CONTRACTOR shall be responsible to see that the completed Work complies accurately with the Contract Documents.

6.1.2 CONTRACTOR shall have an English-speaking, competent Superintendent on the Work at all times that work is in progress. The Superintendent will be CONTRACTOR's representative on the Work and shall have the authority to act on the behalf of CONTRACTOR. All communications given to the Superintendent shall be as binding as if given to CONTRACTOR. Either CONTRACTOR or the Superintendent shall provide a cellular telephone number and an emergency and home telephone number at which one or the other may be reached if necessary when work is not in progress. The Superintendent must be an employee of the CONTRACTOR, unless such requirement is waived in writing by the Owner's Representative. If the CONTRACTOR proposes a management structure with a Project Manager supervising, directing, and managing construction of the work in addition to or in substitution of a Superintendent, the requirements of these Construction Documents with respect to the Superintendent shall likewise apply to any such Project Manager.

.1 CONTRACTOR shall present the resume of the proposed Superintendent to the Owner's Representative showing evidence of experience and successful superintendence and direction of work of a similar scale and complexity. If, in the opinion of the Owner's Representative, the proposed Superintendent does not indicate sufficient experience in line with the Work, he/she will not be allowed to be the designated Superintendent for the Work.

.2 The Superintendent shall not be replaced without Written Notice to Owner's Representative. If CONTRACTOR deems it necessary to replace the Superintendent, CONTRACTOR shall provide the necessary information for approval, as stated above, on the proposed new Superintendent.

.3 A qualified substitute Superintendent may be designated in the event that the designated Superintendent is temporarily away from the Work, but not to exceed a time limit acceptable to the Owner's Representative. CONTRACTOR shall replace the Superintendent upon OWNER's request in the event the Superintendent is unable to perform to OWNER's satisfaction.

6.2 Labor, Materials and Equipment:

6.2.1 CONTRACTOR shall maintain a work force adequate to accomplish the Work within the Contract Time. CONTRACTOR agrees to employ only orderly and competent workers, skillful in performance of the type of Work required under this Contract. CONTRACTOR, Subcontractors, Sub-subcontractors, and their employees may not use or possess any alcoholic or other intoxicating beverages, illegal drugs or controlled substances while on the job or on OWNER's property, nor may such workers be intoxicated, or under the influence of alcohol or drugs, on the job. Subject to the applicable provisions of Texas law, CONTRACTOR, Subcontractors, Sub-subcontractors, and their employees may not use or possess any firearms or other weapons while on the job or on OWNER'S property. If OWNER or Owner's Representative notifies CONTRACTOR that any worker or representative of Contractor is incompetent, disorderly, abusive, or disobedient, has knowingly or repeatedly violated safety regulations, has possessed any firearms in contravention of the applicable provisions of Texas law, or has possessed or was under the influence of alcohol or drugs on the job, CONTRACTOR shall immediately remove such worker or representative, including an officer or owner of CONTRACTOR, from performing Contract Work, and may not employ such worker or representative again on Contract Work without OWNER's prior written consent. CONTRACTOR shall at all times maintain good discipline and order on or off the site in all matters pertaining to the Project. Workers on Project shall be paid not less than wage rates, including fringe benefits, as published by the Department of Labor (DOL) for Building Construction and Heavy and Highway Trades "AS APPLICABLE" and/or the $13.03 minimum Wage required by City of Austin Ordinance No. 20160324-015, whichever is higher. The Total Minimum Wage required can be met using any combination of cash and non-cash qualified fringe benefits provided the cash component meets or exceeds the $13.03 minimum wage required.

6.2.2 Unless otherwise specified in Division 1, CONTRACTOR shall provide and pay for all materials, equipment, labor, transportation, construction equipment and machinery, tools, appliances, fuel, power, light, heat, telephone, water, sanitary facilities, temporary facilities and all other facilities and incidentals necessary for the furnishing, performance, testing, start-up and completion of the Work.

6.2.3 All materials and equipment shall be of good quality and new (including new products made of recycled materials, pursuant to Section 361.426 of the Texas Health & Safety Code), except as otherwise provided in the Contract Documents. If required by Owner's Representative, CONTRACTOR shall furnish satisfactory evidence (reports of required tests, manufacturer's certificates of compliance with

material requirements, mill reports, etc.) as to the kind and quality of materials and equipment. All materials and equipment shall be applied, installed, connected, erected, used, cleaned and conditioned in accordance with instructions of the applicable Supplier, except as otherwise provided in the Contract Documents.

6.2.4 Substitutes and "Approved Equal" Items:

.1 Whenever an item of material or equipment is specified or described in the Contract Documents by using the name of a proprietary item or the name of a particular Supplier, the specification or description is intended to establish the type, function and quality required. Unless the specification or description contains words reading that no like, equivalent or "approved equal" item or no substitution is permitted, other items of material or equipment of other Suppliers may be submitted by CONTRACTOR, at CONTRACTOR'S sole risk, including disruptions to the Critical Path of the Progress Schedule, to E/A through Owner's Representative under the following circumstances:

.1.1 "Approved Equal": If in E/A's sole discretion an item of material or equipment proposed by CONTRACTOR is functionally equal to that named and sufficiently similar so that no change in related Work will be required, it may be considered by E/A as an "approved equal" item, in which case review of the proposed item may, in E/A's sole discretion, be accomplished without compliance with some or all of the requirements for evaluation of proposed substitute items. CONTRACTOR shall provide E/A with the documentation required for E/A to make its determination.

.1.2 Substitute Items: If in E/A's sole discretion an item of material or equipment proposed by CONTRACTOR does not qualify as an "approved equal" item under subparagraph 6.2.4.1.1, it will be considered a proposed substitute item. CONTRACTOR shall submit sufficient information as provided in Division 1 to allow E/A to determine that the item of material or equipment proposed is essentially equivalent to that named and a substitute therefor.

.2 Substitute Construction Methods and Procedures: If a specific means, method, technique, sequence or procedure of construction is shown or indicated in and expressly required by the Contract Documents, CONTRACTOR may, at CONTRACTOR'S sole risk, including disruptions to the Critical Path of the Progress Schedule, with prior approval of E/A furnish or utilize a substitute means, method, technique, sequence, or procedure of construction. CONTRACTOR shall submit sufficient information to Owner's Representative to allow E/A, in E/A's sole discretion, to determine that the substitute proposed is equivalent to that expressly called for by the Contract Documents. The procedure for review by E/A will be same as that provided for substitute items in Division 1.

.3 E/A's Evaluation: E/A will be allowed a reasonable time within which to evaluate each proposal or submittal made pursuant to subparagraphs 6.2.4.1.1 and 6.2.4.1.2. E/A will be the sole judge of acceptability. No "approved equal" or substitute shall be ordered, installed, or utilized until E/A's review is complete, which will be evidenced by either a Change Order or completion of the Shop Drawing review procedure. OWNER may require CONTRACTOR to furnish at CONTRACTOR's expense a special performance guarantee or other surety bond with respect to any "approved equal" or substitute or for any other delay or disruption to the Critical Path of the Project Schedule attributable to any such substitution. OWNER shall not be responsible for any delay due to review time for any "approved equal" or substitute.

.4 CONTRACTOR's Expense: All data and documentation to be provided by CONTRACTOR in support of any proposed "approved equal" or substitute item will be at CONTRACTOR's expense.

.5 The approval of the E/A will not relieve the CONTRACTOR from primary responsibility and liability for the suitability and performance of any proposed substitute item, method or procedure and will not relieve CONTRACTOR from its primary responsibility and liability for curing defective Work and performing warranty work, which the CONTRACTOR shall cure and perform, regardless of any claim the CONTRACTOR may choose to advance against the E/A or manufacturer.

6.2.5 CONTRACTOR agrees to assign to OWNER any rights it may have to bring antitrust suits against its Suppliers for overcharges on materials incorporated in the Project growing out of illegal price fixing agreements. CONTRACTOR further agrees to cooperate with OWNER should OWNER wish to prosecute suits against Suppliers for illegal price fixing.

6.3 Progress Schedule: Unless otherwise provided in Division 1, CONTRACTOR shall adhere to the Baseline Schedule established in accordance with paragraph 2.6 as it may be adjusted from time to time as provided below:

6.3.1 CONTRACTOR shall submit to Owner's Representative for review and approval any proposed adjustments in the Progress Schedule that will not change the Contract Times or Milestones on a monthly basis. Any such proposed adjustments must be substantiated with documentation of any changes to the underlying logic of the Progress Schedule. CONTRACTOR's Progress Schedule must show how the CONTRACTOR will consistently advance the progress of the Work in accordance with the Critical Path of the Work and the Contract Time or Milestones. Such adjustments will conform generally to the Progress Schedule then in effect and additionally will comply with any provisions of Division 1 applicable thereto.

6.3.2 Proposed adjustments in the Progress Schedule that will change the Contract Times or Milestones shall be submitted in accordance with the requirements of Article 12. Any such proposed adjustments must be substantiated with documentation of any changes to the underlying logic of the Progress Schedule. Such adjustments may only be made by a Change Order or Time Extension Request in accordance with Article 12.

6.4 Concerning Subcontractors, Suppliers and Others:

6.4.1 Assignment: CONTRACTOR agrees to retain direct control of and give direct attention to the fulfillment of this Contract. CONTRACTOR agrees not to, by Power of Attorney, or otherwise, assign said Contract without the prior written consent of OWNER. In addition, without OWNER'S written consent, the CONTRACTOR will not subcontract the performance of the entire Work or the supervision and direction of the Work.

6.4.2 Award of Subcontracts for Portions of the Work: CONTRACTOR shall not employ any Subcontractor, Supplier or other person or organization, whether initially or as a substitute, against whom OWNER may have reasonable objection. OWNER will communicate such objections by Written Notice. If OWNER requires a change without good cause of any Subcontractor, person or organization previously accepted by OWNER, the Contract Amount shall be increased or decreased by the difference in the cost occasioned by any such change, and appropriate Change Order shall be issued. CONTRACTOR shall not substitute any Subcontractor, person or organization that has been accepted by OWNER, unless the substitute has been accepted in writing by OWNER. No acceptance by OWNER of any Subcontractor,

Supplier or other person or organization shall constitute a waiver of any right of OWNER to reject defective Work.

6.4.3 CONTRACTOR shall enter into written agreements with all Subcontractors and Suppliers which specifically binds the Subcontractors or Suppliers to the applicable terms and conditions of the Contract Documents for the benefit of OWNER and E/A. The OWNER reserves the right to specify that certain requirements shall be adhered to by all Subcontractors and Sub-subcontractors as indicated in other portions of the Contract Documents and these requirements shall be made a part of the agreement between CONTRACTOR and Subcontractor or Supplier. Subject to and in accordance with the above requirements, the CONTRACTOR must provide and will be deemed for all purposes to have provided in its contracts with major Subcontractors or Suppliers on the Project (those contracts of more than $10,000) the following specific provision: alternative dispute resolution (paragraphs 16.2 and 16.3), which shall be mandatory in the event of a subcontractor or supplier claim and a prerequisite for the submission of any derivative claim. The CONTRACTOR's standard subcontract form is subject to the OWNER's review and approval. The OWNER may request and the CONTRACTOR will provide within five (5) working days a copy of any subcontract requested by the OWNER.

6.4.4 CONTRACTOR shall be fully responsible to OWNER for all acts and omissions of the Subcontractors, Suppliers and other persons and organizations performing or furnishing any of the Work under a direct or indirect contract with CONTRACTOR just as CONTRACTOR is responsible for CONTRACTOR's own acts and omissions. Nothing in the Contract Documents shall create for the benefit of any such Subcontractor, Supplier or other person or organization any contractual relationship between OWNER and any such Subcontractor, Supplier or other person or organization, nor shall it create any obligation on the part of OWNER or E/A to pay or to see to the payment of any moneys due any such Subcontractor, Supplier or other person or organization except as may otherwise be required by laws and regulations.

6.4.5 CONTRACTOR shall be solely responsible for efficiently scheduling and coordinating the Work of Subcontractors, Suppliers and other persons and organizations performing or furnishing any of the Work under a direct or indirect contract with CONTRACTOR in order to avoid any delays or inefficiencies in the prosecution of the Work. CONTRACTOR shall require all Subcontractors, Suppliers and such other persons and organizations performing or furnishing any of the Work to communicate with Owner's Representative through CONTRACTOR.

6.4.6 The divisions and sections of the Specifications and the identifications of any Drawings shall not control CONTRACTOR in dividing or delineating the Work to be performed by any specific trade.

6.4.7 CONTRACTOR shall pay each Subcontractor and Supplier their appropriate share of payments made to CONTRACTOR not later than ten (10) Calendar Days of CONTRACTOR's receipt of payment from OWNER. Upon request from Owner, the CONTRACTOR has two (2) Working Days to provide documentation verifying Payment to Subcontractor(s). The CONTRACTOR is required to notify the Subcontractor(s) in writing of rejection of Application for Payment within two (2) Working Days following notification by Owner. Failure of CONTRACTOR to make payments to Subcontractors or for labor, materials or equipment in accordance to this contract, may be cause to reject future Bids by the CONTRACTOR in accordance with Section 00100 9.B.4 and may be cause to reject payment in accordance with 00700 14.4.1.3.

6.4.8 To the extent allowed by Texas law, the OWNER shall be deemed to be a third party beneficiary to each subcontract and may, if OWNER elects, following a termination of the CONTRACTOR, require that the Subcontractor(s) perform all or a portion of

unperformed duties and obligations under its subcontract(s) for the benefit of the OWNER, rather than the CONTRACTOR; however, if the OWNER requires any such performance by a Subcontractor for the OWNER's direct benefit, then the OWNER shall be bound and obligated to pay such Subcontractor the reasonable value for all Work performed by such Subcontractor to the date of the termination of the CONTRACTOR, less previous payments, and for all Work performed thereafter. In the event that the OWNER elects to invoke its right under this section, OWNER will provide notice of such election to the CONTRACTOR and the affected Subcontractor(s).

6.5 Patent Fees and Royalties:

6.5.1 CONTRACTOR shall be responsible at all times for compliance with applicable patents or copyrights encompassing, in whole or in part, any design, device, material, or process utilized, directly or indirectly, in the performance of the Work or the formulation or presentation of its Bid.

6.5.2 CONTRACTOR shall pay all royalties and license fees and shall provide, prior to commencement of Work hereunder and at all times during the performance of same, for lawful use of any design, device, material or process covered by letters, patent or copyright by suitable legal agreement with the patentee, copyright holder, or their duly authorized representative whether or not a particular design, device, material, or process is specified by OWNER.

6.5.3 CONTRACTOR shall defend all suits or claims for infringement of any patent or copyright and shall save OWNER harmless from any loss or liability, direct or indirect, arising with respect to CONTRACTOR's process in the formulation of its Bid or the performance of the Work or otherwise arising in connection therewith. OWNER reserves the right to provide its own defense to any suit or claim of infringement of any patent or copyright in which event CONTRACTOR shall indemnify and save harmless OWNER from all costs and expenses of such defense as well as satisfaction of all judgments entered against OWNER.

6.5.4 OWNER shall have the right to stop the Work and/or terminate this Agreement at any time in the event CONTRACTOR fails to disclose to OWNER that CONTRACTOR's work methodology includes the use of any infringing design, device, material or process.

6.6 Permits, Fees: Unless otherwise provided in the Supplemental General Conditions, CONTRACTOR shall obtain and pay for all construction permits, licenses and fees required for prosecution of the Work.

6.7 Laws and Regulations:

6.7.1 CONTRACTOR shall give all notices and comply with all laws and regulations applicable to furnishing and performing the Work, including arranging for and obtaining any required inspections, tests, approvals or certifications from any public body having jurisdiction over the Work or any part thereof. Except where otherwise expressly required by applicable laws and regulations, neither OWNER nor E/A shall be responsible for monitoring CONTRACTOR's compliance with any laws and regulations.

6.7.2 Maintaining clean water, air and earth or improving thereon shall be regarded as of prime importance. CONTRACTOR shall plan and execute its operations in compliance with all applicable Federal, State and local laws and regulations concerning control and abatement of water pollution and prevention and control of air pollution.

6.7.3 If CONTRACTOR performs any Work knowing or having reason to know that it is contrary to laws or regulations, CONTRACTOR shall bear all claims, costs, losses and damages arising therefrom; however, it shall not be CONTRACTOR's primary

responsibility to make certain that the Specifications and Drawings are in accordance with laws and regulations, but this does not relieve CONTRACTOR of CONTRACTOR's obligations under Article 3.

6.8 Taxes:

6.8.1 CONTRACTOR shall pay only those sales, consumer, use and other similar taxes required to be paid by CONTRACTOR in accordance with the laws and regulations of the State of Texas in the performance of this public works contract.

6.8.2 OWNER is an exempt organization as defined by Chapter 11 of the Property Tax Code of Texas and is thereby exempt from payment of Sales Tax under Chapter 151, Limited Use Sales, Excise and Use Tax, Texas Tax Code, and Article 1066 (C), Local Sales and Use Tax Act, Revised Civil Statutes of Texas.

6.9 Use of Premises:

6.9.1 CONTRACTOR shall confine construction equipment, the storage of materials and equipment and the operations of workers to the site and land and areas identified in and permitted by the Contract Documents and other land and areas permitted by laws and regulations, right-of-way, permits and easements, and shall not unreasonably encumber the premises with construction equipment or other materials or equipment. CONTRACTOR shall assume full responsibility for any damage to any such land or area, or to the owner or occupant thereof or of any adjacent land or areas, resulting from the performance of the Work. Should any claim be made by any such owner or occupant because of or in connection with the performance of the Work, CONTRACTOR shall promptly settle with such other party by negotiation or otherwise resolve the claim by arbitration or other dispute resolution proceeding or at law. CONTRACTOR shall indemnify, defend and hold harmless OWNER, E/A, E/A'S Consultants and anyone directly or indirectly employed by any of them from and against all claims, costs, losses and damages (including court costs and reasonable attorney's fees) arising out of or resulting from any claim or action, legal or equitable, brought by any such owner or occupant against OWNER, E/A or any other party indemnified hereunder to the extent caused by or based upon performance of the work or failure to perform the Work.

6.9.2 During the progress of the Work and on a daily basis, CONTRACTOR shall keep the premises free from accumulations of waste materials, rubbish and other debris resulting from the Work. At the completion of the Work, CONTRACTOR shall remove all waste materials, rubbish and debris from and about the premises as well as all tools, appliances, construction equipment and machinery and surplus materials. CONTRACTOR shall leave the site clean and ready for occupancy by OWNER at Substantial Completion of the Work. CONTRACTOR shall, at a minimum, restore to original condition all property not designated for alteration by the Contact Documents. If the CONTRACTOR fails to clean up at the completion of the Work, OWNER may do so and the cost thereof will be charged against the CONTRACTOR.

6.9.3 CONTRACTOR shall not load nor permit any part of any structure to be loaded in any manner that will endanger the structure, nor shall CONTRACTOR subject any part of the Work or adjacent property to stresses or pressures that will endanger it.

6.10 Record Documents: CONTRACTOR shall maintain in a safe place at the site, or other location acceptable to OWNER, one (1) record copy of all Drawings, Specifications, Addenda, Change Orders, Change Directives, Field Orders and written interpretations and clarifications (issued pursuant to paragraph 9.5) in good order and annotated to show all changes made during construction. These record documents together with all final samples and all final Shop Drawings will be available to OWNER and E/A for reference during performance of the Work. Upon Substantial Completion of the Work, these record documents, samples and Shop Drawings shall be promptly delivered to Owner's Representative.

6.11 Safety and Protection:

6.11.1 CONTRACTOR shall be responsible for initiating, maintaining and supervising all safety precautions and programs in connection with the Work. Upon request, and prior to installation of measures, CONTRACTOR shall submit a site security plan for approval by OWNER. By reviewing the plan or making recommendations or comments, OWNER will not assume liability nor will CONTRACTOR be relieved of liability for damage, injury or loss. CONTRACTOR shall take all necessary precautions for the safety of and shall provide the necessary protection to prevent damage, injury or loss to:

.1 all persons on the Work site or who may be affected by the Work;

.2 all the Work and materials and equipment to be incorporated therein, whether in storage on or off the site; and

.3 other property at the site or adjacent thereto, including, but not limited to, trees, shrubs, lawns, walks, pavements, roadways, structures, utilities and underground facilities not designated for removal, relocation or replacement in the course of construction.

6.11.2 CONTRACTOR shall comply with all applicable laws and regulations of any public body having jurisdiction for safety of persons or property or to protect them from damage, injury or loss; and shall erect and maintain all necessary safeguards for such safety and protection. CONTRACTOR shall notify owners of adjacent property and of underground facilities, and utility owners when prosecution of the Work may affect them, and shall cooperate with them in the protection, removal, relocation and replacement of their property. All damage, injury or loss to any property referred to in paragraph 6.11.1.2 and 6.11.1.3 caused, directly or indirectly, in whole or in part, by CONTRACTOR, Subcontractor, Supplier or any person or organization directly or indirectly employed by any of them to perform or furnish any of the Work or anyone for whose acts any of them may be liable, shall be remedied by CONTRACTOR (except damage or loss attributable to the fault of Drawings or Specifications or to the acts or omissions of OWNER, or E/A, or E/A's consultant or anyone employed by any of them or anyone for whose acts any of them may be liable, and not attributable, directly or indirectly, in whole or in part, to the faults or negligence of CONTRACTOR or any Subcontractor, Supplier or other person or organization directly or indirectly employed by any of them). CONTRACTOR's duties and responsibilities for safety and protection of the Work shall continue until such time as all the Work is completed and Owner's Representative has issued a notice to OWNER and CONTRACTOR in accordance with Article 14 that the Work is acceptable (except as otherwise expressly provided in connection with Substantial Completion). Without limitation, CONTRACTOR shall comply with the following specific provisions:

It shall be the duty and responsibility of CONTRACTOR and all of its subcontractors to be familiar with and comply with 29 USC Section 651, et seq., the Occupational Safety and Health Act of 1970, as amended (“OSHA”) and to enforce and comply with all provisions of this Act.

The CONTRACTOR and all of its subcontractors shall comply with all applicable requirements of Subpart P of Part 1926 of 29 C.F.R, OSHA Safety and Health Standards, Texas Health and Safety Code Section 756.023, as amended, and shall submit a unit price for the particular excavation safety systems to be utilized by the Contractor for all excavations which exceed a depth of five feet (5’).

Before commencing any excavation which will exceed a depth of five feet (5’), the CONTRACTOR shall provide the Owner with detailed plans and specifications regarding the safety systems to be utilized. Said plans and specifications shall

include a certification from a Texas licensed professional engineer indicating full compliance with the OSHA provisions cited above.

6.11.3 Safety Representative: CONTRACTOR shall designate in writing a qualified and experienced safety representative (the "Safety Representative") at the site whose duties and responsibilities shall include safety training; identifying and mitigating hazardous conditions and unsafe work practices; and developing, maintaining and supervising the implementation of safe work practices and safety programs as deemed necessary and appropriate for the Project. The term "Safety Representative" includes any designated Safety Supervisor, Superintendent or Safety Manager. The Safety Representative shall exercise due diligence in the execution of all Project related safety duties. The Safety Representative shall report directly to a company executive, not an on site project manager. Upon request of OWNER, CONTRACTOR shall provide certifications or other acceptable documentation of the Safety Representative's qualifications. The following requirements will be effective as of September 1, 2010:

.1 The Safety Representative shall present certification of completion of the OSHA 30-hour Construction Industry Training Outreach Program described at: http://www.osha.gov/dte/outreach/construction_generalindustry/construction.html

.2 The Safety Representative shall verify that all construction workers (defined as persons covered by a prevailing wage determination) on the job site, whether employed by the CONTRACTOR or subcontractors, have completed the OSHA 10-hour Construction Industry Training Outreach Program described at: http://www.osha.gov/dte/outreach/construction_generalindustry/construction.html. The Safety Representative must receive a certificate of training completion before allowing a worker on site and shall have all such certificates available for inspection by the OWNER.

.3 The Safety Representative shall ensure that workers, including designated competent persons, have completed all applicable OSHA specific or other training needed to perform their job assignments. Training topics applicable to the scope of the current Project may include, but are not limited to, scaffolds, fall protection, cranes, excavations, electrical safety, tools, concrete and masonry construction, steel erection, operation of motor vehicles and mechanized equipment.

.4 The Safety Representative shall post notice on the site of the Work stating that all workers shall have completed OSHA Construction Industry Training. The Owner may require, and the Safety Representative should consider providing a means of readily identifying workers who have completed the required training to monitor compliance with these requirements.

.5 The Safety Representative shall ensure that all required OSHA and Workers Compensation notices to workers are posted in English and Spanish at one or more conspicuous locations on the work site.

6.11.4 Hazard Communication Programs: CONTRACTOR shall be responsible for coordinating any exchange of material safety data sheets or other hazard communication information required to be made available to or exchanged between or among employers at the site in accordance with laws and regulations.

6.11.5 Emergencies:

.1 In emergencies affecting the safety or protection of persons or the Work at the site or adjacent thereto, CONTRACTOR, without special instruction or authorization from OWNER or E/A, is obligated to act reasonably to prevent threatened damage, injury or loss and to mitigate damage or loss to the Work.

CONTRACTOR shall give Owner's Representative telephone notification as soon as reasonably practical and a prompt written notice if CONTRACTOR believes that any significant changes in the Work or variations from the Contract Documents have been caused thereby. If Owner's Representative determines that a change in the Contract Documents is required because of the action taken by CONTRACTOR in response to such an emergency, a Change Directive or Change Order will be issued to document the consequences of such action; otherwise OWNER will not be responsible for CONTRACTOR's emergency action.

.2 Authorized agents of CONTRACTOR shall respond immediately to call-out at any time of any day or night when circumstances warrant the presence on Project site of CONTRACTOR or his agent to protect the Work or adjacent property from damage, restriction or limitation or to take such action or measures pertaining to the Work as may be necessary to provide for the safety of the public. Should CONTRACTOR and/or their agent fail to respond and take action to alleviate such an emergency situation, OWNER may direct other forces to take action as necessary to remedy the emergency condition, and OWNER will deduct any cost of such remedial action from the funds due CONTRACTOR under this Contract.

.3 In the event there is an accident involving injury to any individual or damage to any property on or near the Work, CONTRACTOR shall provide to Owner's Representative verbal notification within one (1) hour and written notification within twenty-four (24) hours of the event and shall be responsible for recording the location of the event and the circumstances surrounding the event through photographs, interviewing witnesses, obtaining medical reports, police accident reports and other documentation that describes the event. Copies of such documentation shall be provided to Owner's Representative, for OWNER's and E/A's records, within forty-eight (48) hours of the event. Contractor shall cooperate with OWNER on any OWNER investigation of any such incident.

6.11.6 Rest Breaks:

.1 Except as provided in subsection 6.11.6.2 below, an employee performing construction activity at a construction site is entitled to a rest break of not less than ten (10) minutes for every four (4) hours worked. No employee may be required to work more than 3.5 hours without a rest break. A rest break means a break from work within working hours, excluding meal breaks, during which an employee may not work. A rest break shall be scheduled as near as possible to the midpoint of the work period.

.2 An employee is not entitled to a rest break under subsection 6.11.6.1 on any day the employee works less than 3.5 hours or spends more than half of his or her work time engaged in non-strenuous labor in a climate controlled environment.

.3 A sign describing the requirements of this Section 6.11.6 in English and Spanish shall be posted by the employer in each establishment subject to the requirement of a rest break in a conspicuous place or places where notices to employees are customarily posted, in accordance with the OWNER's then current rules for size, content, and location of such signage.

.4 The violation of Ordinance No. 20100729-047, enacted July 29, 2010, which establishes the rest break requirements set forth above, may be enforced with criminal penalties and civil remedies, as set forth in the Ordinance.

6.11.7 If the Contractor fails to carry out the Work in accordance with the Contract Documents so that a safety violation has occurred, the Owner may order the Contractor to stop the Work or any portion thereof, until the cause for such order has been eliminated. However, the right of the Owner to stop the Work under this paragraph shall not give rise to a duty on the part of the Owner to supervise the Contractor's Work or to control the Contractor's means and methods or to exercise this right for the benefit of the Contractor or any other person or entity. All time lost due to Project shut down will be the Contractor's sole responsibility, will be charged against the Contract Time, and the Contractor will be responsible for any and all expenses incurred. This provision is in addition to and supplemental to the applicable provisions of the Project's ROCIP Safety Manual.

6.11.8 Confined Space Program

.1 Contractor acknowledges and agrees that the Owner is temporarily transferring management and control of the site of the Work to the Contractor for the purpose of constructing the Project. The Contractor's responsibilities to manage the Work includes the responsibility to manage the property for purposes of compliance with 29 CFR 1926 subpart AA. To the best of Owner's knowledge and belief, Owner has provided the following information in the plans and specifications and other Contract Documents: (i) the location of each known permit space, (ii) the hazards or potential hazards in each space or the reason it is a permit space; and (iii) any precautions that the Owner or any previous contractor has implemented for the protection of employees in the permit space. This transfer will result in the Contractor being both the host employer and the controlling contractor for this portion of the Work.

6.12 Continuing the Work: CONTRACTOR shall carry on the Work and adhere to the Progress Schedule during all disputes or disagreements with OWNER. No Work shall be delayed or postponed pending resolution of any disputes or disagreements, except as OWNER and CONTRACTOR may otherwise agree in writing.

6.13 CONTRACTOR's General Warranty and Guarantee:

6.13.1 CONTRACTOR warrants and guarantees to OWNER that all Work will conform to the plans and specifications, be performed in a good and workmanlike manner in accordance with the Contract Documents and will not be defective. This warranty will survive the termination or expiration of the Contract. CONTRACTOR's warranty and guarantee hereunder excludes defects or damage caused by:

.1 abuse, modification or improper maintenance or operation by persons other than CONTRACTOR, Subcontractors or Suppliers; or

.2 normal wear and tear under normal usage.

6.13.2 CONTRACTOR's obligation to perform and complete the Work in a good and workmanlike manner in accordance with the Contract Documents shall be absolute. None of the following will constitute an acceptance of Work that is not in accordance with the Contract Documents or a release of CONTRACTOR's obligation to perform the Work in accordance with the Contract Documents:

.1 observations by Owner's Representative and/or E/A;

.2 recommendation of any progress or final payment by Owner's Representative;

.3 the issuance of a certificate of Substantial Completion or any payment by OWNER to CONTRACTOR under the Contract Documents;

.4 use or occupancy of the Work or any part thereof by OWNER;

.5 any acceptance by OWNER or any failure to do so;

.6 any review of a Shop Drawing or sample submittal;

.7 any inspection, test or approval by others; or

.8 any correction of defective Work by OWNER.

6.14 INDEMNIFICATION:

6.14.1 CONTRACTOR shall defend, indemnify and hold harmless OWNER, E/A, E/A'S Consultants and Sub consultants and their respective officers, directors, partners, employees, agents and other Consultants and any of them (the "INDEMNIFIED PARTIES") from and against all claims, costs, losses and damages (including but not limited to all fees and charges of engineers, architects, attorneys and other professionals and all court or arbitration or other dispute resolution costs) arising out of or resulting from the performance of the Work, provided that any such claim, cost, loss or damage:

.1 Is attributable to bodily injury, sickness, disease or death, or to injury to or destruction of tangible property (other than the work itself), including the loss of use resulting therefrom, and

.2 Is caused in whole or in part by any negligent act or omission of CONTRACTOR, any Subcontractor, any Supplier, any person or organization directly or indirectly employed by any of them to perform or furnish any of the work or anyone for whose acts any of them may be liable, regardless of whether or not caused in part by any negligence or omission of the INDEMNIFIED PARTIES hereunder or whether liability is imposed upon such INDEMNIFIED PARTY by laws and regulations regardless of the negligence of any such person or entity.

In the event that indemnification of the INDEMNIFIED PARTIES is prohibited by law, CONTRACTOR shall nonetheless be solely responsible for any liability arising out of or resulting from the performance of the Work, subject to the limitations set forth above, and shall indemnify and hold harmless the remaining INDEMNIFIED PARTIES, who may be legally indemnified, from such liability of the CONTRACTOR and the associated costs described above.

6.14.2 The indemnification obligation under paragraph 6.14.1 shall not be limited in any way by any limitation on the amount or type of damages, or compensation or benefits payable by or for CONTRACTOR or any such Subcontractor, Supplier or other person or organization under workers' compensation acts, disability benefit acts or other employee benefit acts.

6.14.3 The obligations of CONTRACTOR under paragraph 6.14.1 shall not extend to the liability of OWNER, E/A, E/A's consultants, and their officers, directors, partners, employees or agents caused primarily by negligent preparation of maps, drawings, surveys, designs or specifications upon which is placed the applicable state-authorized design professional seal of OWNER's, E/A's or E/A's consultant's officers, directors, partners, employees or agents.

6.14.4 In the event CONTRACTOR fails to follow OWNER's directives concerning use of the site, scheduling or course of construction, or engages in other conduct which proximately causes damage to property based on inverse condemnation or otherwise, then and in that event, CONTRACTOR shall indemnify OWNER against all costs resulting from such claims.

6.14.5 In the event CONTRACTOR unreasonably delays progress of the work being done by others on the site so as to cause loss for

which OWNER becomes liable, then CONTRACTOR shall indemnify OWNER from and reimburse OWNER for such loss.

6.15 Survival of Obligations: All representations, indemnifications, warranties and guarantees made in, required by or given in accordance with the Contract Documents, as well as all continuing obligations indicated in the Contract Documents, will survive final payment, completion and acceptance of the Work and termination or completion of the Agreement.

6.16 Losses from Natural Causes: Unless otherwise specified, all loss or damage to CONTRACTOR arising out of the nature of the Work to be done or from action of the elements, floods or from unforeseeable circumstances in prosecution of the Work or from unusual obstructions or difficulties which may be encountered in prosecution of the Work, shall be sustained and borne by CONTRACTOR at its own cost and expense.

6.17 Notice of Claim: Should CONTRACTOR suffer injury or damage to person or property because of any error, omission or act of OWNER or of any of OWNER's employees or agents or others for whose acts OWNER is liable, a Claim must be made to the other party within thirty (30) calendar days of the event giving rise to such injury or damage. The provisions of this paragraph 6.17 shall not be construed as a substitute for or a waiver of the provisions of any applicable statute of limitations or statute of repose.

6.18 Liquidated Damages: CONTRACTOR or its Surety shall be liable for liquidated damages for the failure of the CONTRACTOR to timely complete the Work or any portion thereof within the Contract Time.

ARTICLE 7 - OTHER WORK

7.1 OWNER may perform other work related to the Project at the site by OWNER's own forces, or let other contracts therefor, or have other work performed by utility owners. CONTRACTOR and OWNER agree to and shall use best efforts to cooperate and coordinate the Work with others performing work and other work related to the Project in order to avoid conflicts and delays in the Work. If CONTRACTOR believes that delay or additional cost is involved because of such action by OWNER, CONTRACTOR may make a Claim as provided in Article 11 or 12.

7.2 CONTRACTOR shall afford other contractors who are in a contract with OWNER and each utility owner (and OWNER, if OWNER is performing the additional work with OWNER's employees) proper and safe access to the site and a reasonable opportunity for the introduction and storage of materials and equipment and the execution of such other work and shall properly connect and coordinate the Work with theirs. Unless otherwise provided in the Contract Documents, CONTRACTOR shall do all cutting, fitting and patching of the Work that may be required to make its several parts come together properly and integrate with such other work. CONTRACTOR shall not endanger any work of others by cutting, excavating or otherwise altering their work and will only cut or alter their work with the written consent of Owner's Representative and the other contractors whose work will be affected. CONTRACTOR shall promptly remedy damage wrongfully caused by CONTRACTOR to completed or partially completed construction or to property of the OWNER or separate contractors.

7.3 If the proper execution or results of any part of CONTRACTOR's Work depends upon work performed by others under this Article 7, CONTRACTOR shall inspect such other work and promptly report to Owner's Representative in writing any delays, defects or deficiencies in such other work that render it unavailable or unsuitable for the proper execution and results of CONTRACTOR's Work. CONTRACTOR's failure to report will constitute an acceptance of such other work as fit and proper for integration with CONTRACTOR's Work except for latent or non-apparent defects and deficiencies in such other work.

7.4 OWNER shall provide for coordination of the activities of the OWNER's own forces and of each separate contractor with the Work of CONTRACTOR, who shall cooperate with them. CONTRACTOR shall participate with other separate contractors and Owner's Representative in reviewing their construction Progress Schedules when directed to do so. On the basis of such review, CONTRACTOR shall make any revisions to the construction Progress Schedule deemed necessary after a joint review and mutual agreement. The agreed upon construction Progress Schedules shall then constitute the Progress Schedules to be used by CONTRACTOR, separate contractors and OWNER until subsequently revised.

7.5 Costs caused by delays or by improperly timed activities or defective construction shall be borne by the party responsible therefor.

ARTICLE 8 - OWNER'S RESPONSIBILITIES

8.1 Prior to the start of construction, OWNER will designate in writing a person or entity to act as Owner's Representative during construction. Except as otherwise provided in these General Conditions, OWNER shall issue all communications to CONTRACTOR through Owner's Representative.

8.2 OWNER will not supervise, direct, control or have authority over or be responsible for CONTRACTOR's means, methods, techniques, sequences or procedures of construction or the safety precautions and programs incident thereto. OWNER is not responsible for any failure of CONTRACTOR to comply with laws and regulations applicable to furnishing or performing the Work. OWNER is not responsible for CONTRACTOR's failure to perform or furnish the Work in accordance with the Contract Documents. Failure or omission of OWNER to discover, or object to or condemn any defective Work or material shall not release CONTRACTOR from the obligation to properly and fully perform the Contract.

8.3 OWNER is not responsible for the acts or omissions of CONTRACTOR, or of any Subcontractor, any Supplier, or of any other person or organization performing or furnishing any of the Work. CONTRACTOR acknowledges and agrees that OWNER'S direction to perform Work in accordance with the approved Progress Schedule is not a demand for acceleration or a dictation of CONTRACTOR'S means or methods.

8.4 Information or services under the OWNER's control shall be furnished by the OWNER with reasonable promptness to avoid delay in orderly progress of the Work. The OWNER shall have a reasonable amount of time to investigate site conditions, review submittals, analyze requests for changes, and to make other decisions in the orderly administration of the Contract. CONTRACTOR must notify the OWNER in writing, if the time for the investigation, review, analysis of any submittals, required for changes or otherwise required for OWNER'S decision, impacts in any way the Critical Path of the approved Progress Schedule.

8.5 The foregoing are in addition to other duties and responsibilities of the OWNER enumerated herein and especially those in respect to Article 4 (Availability of Lands; Subsurface and Physical Conditions; Reference Points), Article 7 (Other Work) and Article 14 (Payments to CONTRACTOR and Completion).

8.6 **Notice of Claim:** Should OWNER suffer injury or damage to person or property because of any error, omission or act of CONTRACTOR or of any of CONTRACTOR's employees or agents or others for whose acts CONTRACTOR is liable, a Claim will be made to the other party within thirty (30) calendar days of receipt of actual or constructive notice of the event giving rise to such injury or damage. The provisions of this paragraph 8.6 shall not be construed as a substitute for or a waiver of the provisions of any applicable statute of limitations or statute of repose.

ARTICLE 9 - ENGINEER/ARCHITECT'S STATUS DURING CONSTRUCTION

9.1 E/A's Authority and Responsibilities:

9.1.1 The duties and responsibilities and the limitations of authority of E/A during construction, as set forth in the Contract Documents, may be assigned or assumed by the OWNER, but shall not be extended without written consent of OWNER and/or E/A. The assignment of any authority, duties or responsibilities to E/A under the Contract Documents, or under any agreement between OWNER and E/A, or any undertaking, exercise or performance thereof by E/A, is intended to be for the sole and exclusive benefit of OWNER and not for the benefit of CONTRACTOR, Subcontractor, Supplier, or any other person or organization, or for any surety or employee or agent of any of them.

9.1.2 E/A will not supervise, direct, control or have authority over or be responsible for CONTRACTOR's means, methods, techniques, sequences or procedures of construction, or the safety precautions and programs incident thereto. E/A is not responsible for any failure of CONTRACTOR to comply with laws and regulations applicable to the furnishing or performing the Work. E/A is not responsible for CONTRACTOR's failure to perform or furnish the Work in accordance with the Contract Documents. Failure or omission of E/A to discover, or object to or condemn any defective Work or material shall not release CONTRACTOR from the obligation to properly and fully perform the Contract.

9.1.3 E/A is not responsible for the acts or omissions of CONTRACTOR, or of any Subcontractor, any Supplier, or of any other person or organization performing or furnishing any of the Work.

9.1.4 If OWNER and E/A agree, E/A will review the final Application for Payment and accompanying documentation and all maintenance and operating instructions, schedules, guarantees, bonds and certificates of inspection, tests and approvals and other documentation required to be delivered by Article 14, but only to determine generally that their content complies with the requirements of, and in the case of certificates of inspections, tests and approvals that the results certified indicate compliance with, the Contract Documents.

9.1.5 The limitations upon authority and responsibility set forth in this paragraph 9.1 shall also apply to E/A's Consultants, Resident Project Representative and assistants.

9.2 E/A as Owner's Representative: E/A may be designated as the Owner's Representative under paragraph 8.1.

9.3 Visits to Site: If OWNER and E/A agree, E/A will make visits to the site at intervals appropriate to the various stages of construction as E/A deems necessary in order to observe as an experienced and qualified design professional the progress that has been made and the quality of the various aspects of CONTRACTOR's executed Work. Based on information obtained during such visits and observations, E/A will endeavor for the benefit of OWNER to determine, in general, if the Work is proceeding in accordance with the Contract Documents. E/A will not be required to make exhaustive or continuous on-site inspections to check the quality or quantity of the Work. E/A's efforts will be directed toward providing for OWNER a greater degree of confidence that the completed Work will conform generally to the Contract Documents. On the basis of such visits and on-site observations, E/A will keep OWNER informed of the progress of the Work and will endeavor to guard OWNER against defective Work. E/A's visits and on-site observations are subject to all the limitations on E/A's authority and responsibility set forth in paragraph 9.1.

9.4 Resident Project Representative: If OWNER and E/A agree, E/A will furnish a Resident Project Representative to assist E/A in providing more continuous observation of the Work. The responsibilities and authority and limitations of any such Resident Project Representative and assistants will be as provided in paragraph 9.1 and in the Supplemental General Conditions. OWNER may designate another representative or agent to represent OWNER at the site who is not E/A, E/A's consultant, agent or employee.

9.5 Clarifications and Interpretations: E/A may determine that written clarifications or interpretations of the requirements of the Contract Documents (in the form of drawings or otherwise) are necessary. Such written clarifications or interpretations will be consistent with the intent of and reasonably inferable from the Contract Documents, will be issued with reasonable promptness by Owner's Representative and will be binding on OWNER and CONTRACTOR. If OWNER or CONTRACTOR believes that a written clarification or interpretation justifies an adjustment in the Contract Amount or the Contract Times, OWNER or CONTRACTOR may make a Claim therefor as provided in Article 11 or 12.

9.6 Rejecting Defective Work: E/A will recommend that OWNER disapprove or reject Work which E/A believes to be defective, or believes will not produce a completed Project that conforms to the Contract Documents or will prejudice the integrity of the design concept of the completed Project as a functioning whole as indicated by the Contract Documents.

9.7 Shop Drawings: Refer to Division 1 for E/A's authority concerning Shop Drawings.

ARTICLE 10 - CHANGES IN THE WORK

10.1 Changes:

10.1.1 Without invalidating the Contract and without notice to any surety, OWNER may, at any time or from time to time, order additions, deletions or revisions in the Work. Such changes in the Work will be authorized by Change Order, Change Directive or Field Order. In the event that the OWNER and the CONRACTOR are unable to negotiate the terms of a Change Order for the performance of additional Work, the OWNER may, at its election, perform such additional Work with its own forces or with another contractor and such work will be considered "Other Work" in accordance with Article 7.

10.1.2 Changes in the Work shall be performed under applicable provisions of the Contract Documents, and CONTRACTOR shall proceed promptly, unless otherwise provided in the Change Order, Change Directive or Field Order. CONTRACTOR's proposals for changes in the Contract Amount and/or Contract Time shall be submitted within ten (10) Calendar Days of request by Owner's Representative, including impacts to the approved Progress Schedule, unless Owner's Representative grants an extension. OWNER will review each proposal and respond to CONTRACTOR within ten (10) Calendar Days. After review by OWNER, CONTRACTOR shall provide any supporting data requested by Owner's Representative within seven (7) Calendar Days, unless Owner's Representative grants an extension. OWNER will determine within seven (7) Calendar Days whether to pursue the change in Work.

10.1.3 CONTRACTOR shall not be entitled to an increase in the Contract Amount or an extension of the Contract Times with respect to any Work performed that is not required by the Contract Documents as amended, modified and supplemented as provided in paragraphs 3.3.1 and 3.3.2, except in the case of an emergency as provided in paragraph 6.11.5 or in the case of uncovering Work as provided in paragraph 13.4.

10.1.4 Except in the case of an emergency as provided in paragraph 6.11.5, a Change Order or Change Directive is required before CONTRACTOR commences any activities associated with a change in the Work which, in CONTRACTOR 's opinion, will result in a change in the Contract Amount and/or Contract Times.

10.1.5 If notice of any change affecting the general scope of the Work or the provisions of the Contract Documents (including, but not limited to, Contract Amount or Contract Times) is required by the provisions of any Bond to be given to a surety, the giving of any such notice will be CONTRACTOR's responsibility, and the amount of each applicable Bond will be adjusted accordingly.

10.2 Change Orders:

10.2.1 OWNER and CONTRACTOR shall execute appropriate written Change Orders covering:

.1 a change in the Work;

.2 the amount of the adjustment in the Contract Amount, if any; and

.3 the extent of the adjustment in the Contract Time, if any.

10.2.2 An executed Change Order shall represent the complete, equitable, and final amount of adjustment in the Contract Amount and/or Contract Time owed to CONTRACTOR or OWNER as a result of the occurrence or event causing the change in the Work encompassed by the Change Order.

10.3 Change Directives:

10.3.1 Without invalidating the Contract, OWNER may, by written Change Directive, using the Force Account method, order changes in the Work within the general scope of the Contract consisting of additions, deletions or other revisions, the Contract Amount and Contract Time being adjusted as necessary. “Force Account” means a basis of payment for the direct performance of Work with payment based on the actual cost of the labor, equipment and materials furnished and consideration for overhead and profit as set forth in Section 11.5, below. A Change Directive shall be used in the absence of complete and prompt agreement on the terms of a Change Order. Where practicable, any items of Work that may be agreed upon, prior to the performance of Work under this Section, will be included in a separate Change Order. For example, the cost of the installation of additional asphalt may be agreed upon based on the unit prices in the Bid.

10.3.2 If the Change Directive provides for an adjustment to the Contract Amount, the adjustment shall be based on the method provided in paragraph 11.5.

10.3.3 A Change Directive shall be effective immediately and shall be recorded later by preparation and execution of an appropriate Change Order.

10.3.4 Upon receipt of a Change Directive, CONTRACTOR shall promptly proceed with the change in the Work involved, provided, prior to the commencement of any Work under this section, the CONTRACTOR must submit its proposed Work plan, anticipated schedule, and a list of its work force and equipment proposed to be used in the Work for OWNER’S approval. Upon such approval, CONTRACTOR must promptly commence and make continuous progress in the Work. The OWNER reserves the right to withhold payment for low production or lack of progress.

10.4 Field Order:

10.4.1 Owner's Representative may authorize minor variations in the Work from the requirements of the Contract Documents which do not involve an adjustment in the Contract Amount or the Contract Times and are compatible with the design concept of the completed Project as a functioning whole as indicated by the

Contract Documents. These shall be accomplished by written Field Order and shall be binding on OWNER and on CONTRACTOR who shall perform the Work involved promptly.

10.4.2 If CONTRACTOR believes that a Field Order would require an adjustment in the Contract Amount and/or Contract Times, CONTRACTOR shall make a prompt written request to Owner's Representative for a Change Order. Any request by CONTRACTOR for an adjustment in Contract Amount and/or Contract Times must be made in writing prior to beginning the work covered by the Field Order.

10.5 **No Damages for Delay:** CONTRACTOR shall receive no compensation for delays or hindrances to the Work, except when direct and unavoidable extra cost to CONTRACTOR is caused by failure of OWNER to provide information or material, if any, which is to be furnished by OWNER or access to the Work and only to the extent that such acts continue after the CONTRACTOR furnishes OWNER with written notice of such failure. When such extra compensation is claimed a written statement thereof shall be presented by CONTRACTOR to OWNER and if by OWNER found correct shall be approved. If delay is caused by specific orders given by OWNER to stop work or by performance of extra Work or by failure of OWNER to provide material or necessary instructions for carrying on the Work, then such delay will entitle CONTRACTOR to an equivalent extension of time, CONTRACTOR's application for which shall, however, be subject to approval of OWNER. No such extension of time shall release CONTRACTOR or surety on its performance bond from all CONTRACTOR's obligations hereunder which shall remain in full force until discharge of the Contract. In no event shall the CONTRACTOR be entitled to any compensation or recovery of any special damages in connection with any delays, including without limitation: consequential damages, lost opportunity costs, impact damages, or other similar damages. The OWNER'S exercise of any of its rights or remedies under the Contract Documents (including without limitation ordering changes in the Work, or directing suspension, rescheduling, or correction of the Work), regardless of the extent or frequency of the OWNER'S exercise of such rights or remedies, shall not be construed as active interference in the CONTRACTOR'S performance of the Work. Except as otherwise provided herein, an extension of Contract Time, to the extent permitted under Article 12, shall be the sole remedy of the CONTRACTOR for any acknowledged delays.

ARTICLE 11 - CHANGE OF CONTRACT AMOUNT

11.1 The Contract Amount is stated in the Agreement and, including authorized adjustments, is the total amount payable by OWNER to CONTRACTOR for performance of the Work under the Contract Documents.

11.2 The original Contract Amount may not be increased by more than twenty-five percent (25%) and it may not be decreased more than twenty-five percent (25%) without the consent of the CONTRACTOR to such decrease, except in the event of a termination for convenience under paragraph 15.2 or the failure of the City Council to appropriate sufficient funding for the Project, in which events it is agreed that the consent of the CONTRACTOR will not be required.

11.3 The Contract Amount shall only be changed by a Change Order. Any claim for an adjustment in the Contract Amount shall be made by Written Notice delivered by the party making the Claim to the other party promptly (but in no event later than thirty (30) calendar days) after the start of the occurrence or event giving rise to the Claim and stating the general nature of the Claim. Notice of the amount of the Claim with supporting data shall be delivered within thirty (30) calendar days after Written Notice of Claim is delivered by claimant, and shall represent that the adjustment claimed covers all known amounts to which claimant is entitled as a result of said occurrence or event. If OWNER and

CONTRACTOR cannot otherwise agree, all Claims for adjustment in the Contract Amount shall be determined as set out in Article 16.

11.4 Determination of Value of Work:

11.4.1 The value of any Work covered by a Change Order for an adjustment in the Contract Amount will be determined by one or more of the following methods:

.1 by application of unit prices contained in the Contract Documents to the quantities of the items involved.

.2 by a mutually agreed lump sum properly itemized and supported by sufficient substantiating data, including documentation by subcontractors performing the work, to permit evaluation.

.3 by cost of Work plus CONTRACTOR's fee for all overhead costs and profit (determined as provided in paragraph 11.5).

.4 No cost will be included in the change order for time spent preparing the change order, nor will costs be included for an estimate of time to negotiate the change order costs for machinery, tools, or equipment as described in subparagraph 11.5.3

11.4.2 Before using the method described in paragraph 11.4.1.3, OWNER and CONTRACTOR agree to negotiate a Change Order using the methods identified in paragraphs 11.4.1.1 and 11.4.1.2, as appropriate, to determine the adjustment in the Contract Amount.

11.5 Cost of Work: If neither of the methods defined in paragraphs 11.4.1.1 nor 11.4.1.2 can be agreed upon before a change in the Work is commenced which will result in an adjustment in the Contract Amount, then the change in the Work will be performed by Change Directive, using the Force Account method, and payment will be made as follows:

11.5.1 For all personnel, CONTRACTOR will receive actual field cost wage rates for each hour that said personnel are actually engaged in such Work, as substantiated by its certified payroll, to which will be added an amount equal to twenty-five percent (25%) of the sum thereof as compensation for CONTRACTOR's and any effected Subcontractor's total overhead and profit. No separate charge will be made by CONTRACTOR or its Subcontractor(s) for organization or overhead expenses. In no case will the rate of wage be less than the minimum shown in the Contract for a particular category. CONTRACTOR will also receive an amount equal to 55% of the wages paid personnel, excluding the 25% compensation provided above, for CONTRACTOR's and any effected Subcontractor's cost of premiums on public liability insurance, workers' compensation insurance, social security and unemployment insurance. The actual cost of CONTRACTOR's bond(s) on the extra Work will be paid based on invoices from surety. No charge for superintendence will be made unless considered necessary and ordered by OWNER.

11.5.2 CONTRACTOR will receive the actual cost, including freight charges, of the materials used and installed on such Work, to which costs will be added a sum equal to twenty-five percent (25%) thereof as compensation for CONTRACTOR's and any effected Subcontractor's total overhead and profit. In case material invoices indicate a discount may be taken, the actual cost will be the invoice price minus the discount.

11.5.3 For machinery, trucks, power tools, or other similar equipment (the “equipment”) agreed to be necessary by OWNER and CONTRACTOR, OWNER will allow CONTRACTOR the Regional and Model Year adjusted Monthly Ownership Cost divided by 176 plus the Hourly Estimated Operating Costs as given in the latest edition of the "Rental Rate Blue Book" as published by EquipmentWatch (1-800-

669-3282) for each hour that said equipment is in use on such work. The established equipment rates will be paid for each hour that the equipment is utilized in the Work. In the event that the equipment is used intermittently during the Work, full payment for an eight-hour day will be made if the equipment is not idle more than four (4) hours of the day. If the equipment is idle more than four (4) hours in a day, then payment will be made only for the actual hours worked. No additional compensation will be allowed on the equipment for CONTRACTOR's or any affected Subcontractor's overhead and profit. OWNER may accept an actual rental invoice in lieu of the method of calculation set forth in paragraph 11.5.3 for equipment rented exclusively for Force Account Work or for equipment not included in the Rental Rate Blue Book.

11.5.4 The compensation, as herein provided for, shall be received by CONTRACTOR and any affected Subcontractor as payment in full for work done by Change Directive and will include use of small tools, and total overhead expense and profit. CONTRACTOR and Owner's Representative shall compare records of work done by Change Directive at the end of each day. Copies of these records will be made upon forms provided for this purpose by OWNER and signed by both Owner's Representative and CONTRACTOR, with one copy being retained by OWNER and one by CONTRACTOR. Refusal by CONTRACTOR to sign these records within two (2) working days of presentation does not invalidate the accuracy of the record.

11.6 Unit Price Work:

11.6.1 Where the Contract Documents provide that all or part of the Work is to be unit price Work, initially the Contract Amount will be deemed to include for all unit price work an amount equal to the sum of the established unit price for each separately identified item of unit price work times the estimated quantity of each item as indicated in the Bid. The estimated quantities of items of unit price work are not guaranteed and are solely for the purpose of comparison of Bids and determining an initial Contract Amount. Determinations of the actual quantities and classifications of unit price work performed by CONTRACTOR will be made by Owner's Representative. Owner's Representative will review with CONTRACTOR the preliminary determinations on such matters before rendering a written decision thereon (by recommendation of an Application for Payment or otherwise).

11.6.2 When "plan quantity" is indicated for a Bid item, CONTRACTOR shall be paid amount specified in the Contract Documents without any measurements.

11.6.3 Each unit price will be deemed to include an amount considered by CONTRACTOR to be adequate to cover CONTRACTOR's overhead and profit for each separately identified item.

11.6.4 A Major Item is any individual Bid item in the Bid that has a total cost equal to or greater than five percent (5%) of the original Contract Amount or $50,000, whichever is greater, computed on the basis of Bid quantities and Contract unit prices.

11.6.5 OWNER or CONTRACTOR may make a Claim for an adjustment in the Contract Amount in accordance with Article 11 if:

.1 the actual quantity of any Major Item should become as much as twenty percent (20%) more than or twenty percent (20%) less than that in the Bid; or

.2 CONTRACTOR presents documentation contesting accuracy of "plan quantity" and Owner's Representative verifies quantity and determines original value is in error by five percent (5%) or more;

Provided, however, in the event a Major Item is reduced by twenty percent (20%) or more of the amount in the Bid, no additional Article 11 profit or overhead will be added, if, due to other additions in the Work, the net value of the Contract Amount is not reduced.

ARTICLE 12 - CHANGE OF CONTRACT TIMES

12.1 Working Day and Calendar Day Contracts:

12.1.1 The Contract Times (or Milestones) may only be changed by Change Order or Time Extension Request duly executed by both CONTRACTOR and Owner's Representative. Any claim for an adjustment of the Contract Times (or Milestones) shall be made by Written Notice delivered by the party making the Claim to the other party promptly (but in no event later than thirty (30) calendar days after the start of the occurrence or event giving rise to the delay) and stating the general nature of the delay. Notice of the extent of the delay with supporting data shall be delivered within thirty (30) calendar days after Written Notice of Claim is delivered by claimant, and shall represent that the adjustment claimed is the entire adjustment to which claimant is entitled as a result of said occurrence or event. If OWNER and CONTRACTOR cannot otherwise agree, all Claims for adjustment in the Contract Times (or Milestones) shall be determined as set out in Article 16. No Claim for an adjustment in the Contract Times (or Milestones) will be valid if not submitted in accordance with the requirements of this paragraph.

12.1.2 When CONTRACTOR is at fault and OWNER stops the Work, so that corrections in the Work can be made by CONTRACTOR, no extension in time will be allowed.

12.1.3 When CONTRACTOR is prevented from completing any part of the Work within the Contract Times (or Milestones) due to delay beyond the control of both OWNER and CONTRACTOR, an extension of the Contract Times (or Milestones) in an amount equal to the time lost due to such delay shall be CONTRACTOR's sole and exclusive remedy for such delay. If performance by the CONTRACTOR or OWNER is interrupted by any occurrence not occasioned by its own conduct, whether such occurrence be an act of god or the result of war, riot, civil commotion, sovereign conduct, or the conduct of a third party, then such performance will be excused for a period of time necessary to remedy its effects, provided, however, in such an event, a conference will be held within three (3) business days to establish a proposed new Progress Schedule for the Project.

12.1.4 OWNER will consider time extension requests and may grant CONTRACTOR an extension of time because of:

.1 Changes ordered in the work which justify additional time.

.2 Failure of materials or products being at the Project site due to delays in transportation or failures of Suppliers, which are not the result of CONTRACTOR's, Subcontractor's or Supplier's negligence. The request for an extension of time shall be supported by a citation of acts demonstrating that the delays are beyond CONTRACTOR's control, including, but not limited to, CONTRACTOR's efforts to overcome such delays documented as follows:

a) Copy of purchase order for delayed item(s) indicating date ordered by CONTRACTOR/ Subcontractor and date purchase order received by Supplier.

b) If item(s) require Shop Drawings or other submittal information in accordance with the Contract Documents, provide record of date

submittal(s) forwarded to Owner's Representative, date submittal(s) returned to CONTRACTOR, and date submittal(s) forwarded to Supplier.

c) Copy of document(s) from Supplier, on Supplier's letterhead, indicating date(s) item(s) would be ready for shipment and/or actual shipment date(s).

d) Copies of all correspondence between CONTRACTOR / Subcontractor and Supplier indicating CONTRACTOR / Subcontractor's efforts to expedite item(s).

e) If item(s) are being purchased by a Subcontractor, provide correspondence, meeting notes, etc., that reflect CONTRACTOR's efforts with the Subcontractor to expedite delivery of the item(s).

.3 When acts of OWNER, E/A, utility owners or other contractors employed by OWNER delay progress of work through no fault of CONTRACTOR. The CONTRACTOR will only be entitled to an extension of time for delays that affect the Critical Path of the Work and that are not caused by the CONTRACTOR.

.4 When CONTRACTOR is delayed by strikes, lockouts, fires, losses from natural causes, or other unavoidable cause or causes beyond CONTRACTOR's control.

12.2 Calendar Day Contracts:

12.2.1 Under a Calendar Day Contract, CONTRACTOR may be granted an extension of time because of unusual inclement weather, including but not limited to unusual rainfall events, which are beyond the normal rainfall recorded and expected for Austin, Texas. However, the CONTRACTOR will not be granted an extension of time for “normal rainfall”, as described below.

12.2.2 "Unusual Inclement Weather" is defined as a rain event or other weather related event which occurs at the site and is of sufficient magnitude to prevent CONTRACTOR from performing units of Work critical to maintaining the Progress Schedule.

12.2.3 Baseline Rain Day Determination. “Normal rainfall” compiled by the State climatologist, based on U.S. Weather Bureau Records for Austin, Texas, is considered a part of the Calendar Day Contract, and is not a justification for an extension of time. Listed below are the number of days in each month for which no compensatory days for rainfall events (“Rain Days”) in such months may be claimed:

January..... 8 days

February..... 8 days

March..... 7 days

April..... 7 days

May..... 9 days

June..... 6 days

July..... 5 days

August..... 5 days

September..... 7 days

October..... 7 days

November..... 7 days

December..... 7 days

Rain Days in addition to the baseline Rain Day determination described above will be measured with the Owner's Representative's approval at the nearest operational public weather data collection facility to the site, including but not limited to the OWNER's early warning flood gauge system.

12.2.4 CONTRACTOR may receive credit in any month for Unusual Inclement Weather, and specifically for any Rain Days in that month which exceed the number of Rain Days allocated to that month, if a Claim is made in accordance with paragraph 12.1.1 and the weather event meets the definition for "Unusual Inclement Weather", and as applicable, "Rain Day" and such claimed day is a day on which Work critical to maintaining the Progress Schedule is scheduled to be performed and is otherwise capable of being performed.

ARTICLE 13 - TESTS AND INSPECTIONS; CORRECTION, REMOVAL OR ACCEPTANCE OF DEFECTIVE WORK

13.1 Notice of Defects: Prompt notice of all defective Work of which OWNER or E/A has actual knowledge will be given to CONTRACTOR. All defective Work may be rejected, corrected or accepted as provided in Article 13. CONTRACTOR must give OWNER and E/A prompt notice of any defective Work of which CONTRACTOR has actual knowledge.

13.2 Access to Work: OWNER, E/A, E/A's Consultants, other representatives and personnel of OWNER, independent testing laboratories and governmental agencies having jurisdiction will have access to the Work at reasonable times for observing, inspecting and testing. CONTRACTOR shall provide them proper and safe conditions for such access, and advise them of CONTRACTOR's site safety procedures and programs so that they may comply therewith as applicable.

13.3 Tests and Inspections:

13.3.1 CONTRACTOR shall give timely notice of readiness of the Work for all required inspections, tests or approvals, and shall cooperate with inspection and testing personnel to facilitate required inspections or tests.

13.3.2 OWNER shall employ and pay for services of an independent testing laboratory to perform all inspections, tests or approvals required by the Contract Documents except:

.1 for inspections, tests or approvals covered by paragraphs 13.3.3 and 13.3.4 below;

.2 that costs incurred for tests or inspections conducted pursuant to paragraph 13.4.3 shall be paid as provided in paragraph 13.4.3;

.3 for reinspecting or retesting defective Work, including any associated costs incurred by the testing laboratory for cancelled tests or standby time; and

.4 as otherwise specifically provided in the Contract Documents.

13.3.3 If laws or regulations of any public body having jurisdiction require any Work (or part thereof) specifically to be inspected, tested or approved by an employee or other representative of such public body, CONTRACTOR shall assume full responsibility for arranging and obtaining such inspections, tests or approvals, pay

all costs in connection therewith and furnish Owner's Representative the required certificates of inspection or approval.

13.3.4 CONTRACTOR shall also be responsible for arranging and obtaining and shall pay all costs in connection with any inspections, tests or approvals required for OWNER's and E/A's review of submittals covering materials, equipment, and mix designs to be incorporated in the Work.

13.3.5 All testing laboratories shall meet the requirements of ASTM E-329.

13.4 Uncovering Work:

13.4.1 If any Work (or the work of others) that is to be inspected, tested or approved is covered by CONTRACTOR without written concurrence of Owner's Representative, or if any Work is covered contrary to the written request of Owner's Representative, it must, if requested by Owner's Representative, be uncovered and recovered at CONTRACTOR's expense.

13.4.2 Uncovering Work as provided in paragraph 13.4.1 shall be at CONTRACTOR's expense unless CONTRACTOR has given Owner's Representative timely notice of CONTRACTOR's intention to cover the same and Owner's Representative has not acted within five (5) working days to such notice.

13.4.3 If Owner's Representative considers it necessary or advisable that covered Work be observed, inspected or tested, CONTRACTOR shall uncover, expose or otherwise make available for observation, inspection or testing that portion of the Work in question, furnishing all necessary labor, material and equipment. If it is found that such Work is defective, CONTRACTOR shall pay all claims, costs, losses and damages caused by, arising out of or resulting from such uncovering, exposure, observation, inspection and testing and of satisfactory replacement or reconstruction (including but not limited to all costs of repair or replacement of work of others); and OWNER shall be entitled to an appropriate decrease in the Contract Amount, and may make a Claim therefor as provided in Article 11. If, however, such Work is not found to be defective, CONTRACTOR shall be allowed an increase in the Contract Amount or an extension of the Contract Times (or Milestones), or both, directly attributable to such uncovering, exposure, observation, inspection, testing, replacement and reconstruction; and CONTRACTOR may make a Claim therefor as provided in Articles 11 and 12.

13.5 OWNER May Stop the Work:

13.5.1 If the Work is defective, or CONTRACTOR fails to supply sufficient skilled workers, suitable materials, and/or equipment; or fails to furnish or perform the Work in such a way that the Work in progress or the completed Work will conform to the Contract Documents, OWNER may order CONTRACTOR to stop the Work, or any portion thereof, until the cause for such order has been eliminated; however, this right of OWNER to stop the Work shall not give rise to any duty on the part of OWNER to exercise this right for the benefit of CONTRACTOR or any surety or other party.

13.5.2 If CONTRACTOR fails to correct defective Work or submit a satisfactory plan to take corrective action, with procedure and time schedule, OWNER may order CONTRACTOR to stop the Work, or any portion thereof, until cause for such order has been eliminated, or take any other action permitted by this Contract. A notice to stop the Work, based on defects, shall not stop calendar or working days charged to the Project.

13.6 Correction or Removal of Defective Work: If required by OWNER, CONTRACTOR shall promptly, as directed, either correct all defective Work, whether or not fabricated, installed or completed, or, if the Work has been rejected by Owner's Representative, remove it from the site and replace it with Work that is not defective. CONTRACTOR shall correct or remove and replace defective Work, or submit a plan of action detailing how the deficiency will be corrected, within the time frame identified in the notice of defective Work. CONTRACTOR shall pay all claims, costs, losses and damages caused by or resulting from such correction or removal (including but not limited to all costs of repair or replacement of work of others).

13.7 Warranty period:

13.7.1 If within one year after the date of Substantial Completion or such longer period of time as may be prescribed by laws or regulations or by the terms of any applicable special guarantee required by the Contract Documents or by any specific provision of the Contract Documents (e.g. paragraph 14.11.2), any Work, including work performed after the Substantial Completion date, is found to be defective, CONTRACTOR shall promptly, without cost to OWNER and in accordance with OWNER's written instructions:

(i) correct such defective Work, or, if it has been rejected by OWNER, remove it from the site and replace it with Work that is not defective, and

(ii) satisfactorily correct or remove and replace any damage to other Work or the work of others resulting therefrom.

If CONTRACTOR does not promptly comply with the terms of such instructions, or in an emergency where delay would cause serious risk of loss or damage, OWNER may have the defective Work corrected or the rejected Work removed and replaced, and all claims, costs, losses and damages caused by or resulting from such removal and replacement (including but not limited to all costs of repair or replacement of work of others) will be paid by CONTRACTOR. The warranty period will be deemed to be renewed and recommenced in connection with the completed items of Work requiring correction.

13.7.2 In special circumstances where a particular item of equipment is placed in continuous service before Substantial Completion of all the Work, the warranty period for that item may start to run from an earlier date if so provided in the Contract Documents.

13.7.3 If correction of defective Work will affect the function or use of the facility CONTRACTOR shall not proceed with correction of defective Work without prior coordination and approval of OWNER.

13.7.4 The obligations of the CONTRACTOR to perform warranty work will survive the acceptance of the Work and any termination of the Contract.

13.8 Acceptance of Defective Work: If, instead of requiring correction or removal and replacement of defective Work, OWNER decides to accept it, OWNER may do so. CONTRACTOR shall pay all claims, costs, losses and damages attributable to OWNER's evaluation of and determination to accept such defective Work. If any such acceptance occurs prior to recommendation of final payment, a Change Order will be issued incorporating the necessary revisions in the Contract Documents and compensating OWNER for the diminished value of the defective Work. If the acceptance occurs after such recommendation, an appropriate amount will be paid by CONTRACTOR to OWNER after a calculation by OWNER of the diminution in value of the defective Work.

13.9 OWNER May Correct Defective Work: If CONTRACTOR fails within a reasonable time after Written Notice of OWNER to correct defective Work, or to remove and replace rejected Work, or if CONTRACTOR fails to perform the Work in accordance with the Contract Documents, or if CONTRACTOR fails to comply with any other provision of the Contract

Documents, OWNER may, after seven (7) calendar days' Written Notice to CONTRACTOR, correct and remedy any such deficiency. If, in the opinion of the Owner's Representative, significant progress has not been made during this seven (7) calendar day period to correct the deficiency, the OWNER may exercise any actions necessary to remedy the deficiency. In exercising the rights and remedies under this paragraph, OWNER shall proceed expeditiously. In connection with such corrective and remedial action, OWNER may exclude CONTRACTOR from all or part of the site, take possession of all or part of the Work, and suspend CONTRACTOR's services related thereto, and incorporate in the Work all materials and equipment stored at the site or for which OWNER has paid CONTRACTOR but which are stored elsewhere. CONTRACTOR shall allow OWNER, its agents and employees, OWNER's other contractors, E/A and E/A's consultants access to the site to enable OWNER to exercise the rights and remedies under this paragraph. All claims, costs, losses and damages incurred or sustained by OWNER in exercising such rights and remedies will be charged against CONTRACTOR and a Change Order will be issued incorporating the necessary revisions in the Contract Documents with respect to the Work. Such claims, costs, losses and damages will include but not be limited to all costs of repair or replacement of work of others destroyed or damaged by correction, removal or replacement of CONTRACTOR's defective Work. CONTRACTOR shall not be allowed an extension of the Contract Times (or Milestones), or claims of damage because of any delay in the performance of the Work attributable to the exercise by OWNER of OWNER's rights and remedies hereunder.

ARTICLE 14 - PAYMENTS TO CONTRACTOR AND COMPLETION

14.1 Application for Progress Payment:

14.1.1 Within 45 days from when the work was performed by the Contractor and Subcontractors, but not more often than once a month, CONTRACTOR shall submit to Owner's Representative for review an Application for Payment, in a form acceptable to OWNER, filled out and signed by CONTRACTOR covering the Work completed as of the date of the Application and accompanied by such supporting documentation as is required by the Contract Documents.

14.1.2 Such applications shall not include requests for payment on account of changes in the Work which have been properly authorized by Change Directives but not yet included in Change Orders.

14.1.3 Such applications shall not include requests for payment of amounts the CONTRACTOR does not intend to pay to a Subcontractor or Supplier because of a dispute or other reason.

14.1.4 If payment is requested on the basis of materials or equipment not incorporated in the Work but delivered and suitably stored at the site or at another location agreed to in writing, the Application for Payment shall be accompanied by such bills of sale, data and other procedures satisfactory to OWNER substantiating OWNER's title to such materials or equipment or otherwise protecting OWNER's interest. Payment on account of such materials or equipment will not include any amount for CONTRACTOR's overhead or profit or relieve CONTRACTOR of its obligation to protect and install such materials or equipment in accordance with the requirements of the Contract and to restore damaged or defective Work. If materials or equipment are stored at another location, at the direction of the OWNER they shall be stored in a bonded and insured facility, accessible to E/A and OWNER, and shall be clearly marked as property of OWNER. Title to materials delivered to the site of the Work or a staging area will pass to OWNER upon payment by OWNER without the necessity for further documentation. Risk of loss will not pass to OWNER until acceptance.

14.1.5 Where the original Contract Amount is less than $400,000, OWNER will pay CONTRACTOR total amount of approved Application for Payment, less ten percent (10%) of amount thereof, which ten percent (10%) will be retained until final payment, less all previous payments and less all other sums that may be retained by OWNER under the terms of this Agreement. Where the original Contract Amount is $400,000 or more, OWNER will pay CONTRACTOR total amount of approved Application for Payment, less five percent (5%) of amount thereof, which five percent (5%) will be retained until final payment, less all previous payments and less all other sums that may be retained by OWNER under the terms of this Agreement. In either case, if the Work is near completion and delay occurs due to no fault or neglect of CONTRACTOR, OWNER may pay a portion of the retained amount to CONTRACTOR. CONTRACTOR, at OWNER's option, may be relieved of the obligation to complete the Work and, thereupon, CONTRACTOR shall receive payment of the balance due under the Contract subject to the conditions stated under paragraph 15.2. A Subcontractor may submit a written request to the CONTRACTOR and Project Manager requesting release of retainage for work by the Subcontractor that has been completed and approved. The Project Manager will evaluate the request and if it is approved, the Project Manager will request the CONTRACTOR to include the request for release of an appropriate amount of retainage in the next Pay Application.

14.1.6 Applications for Payment shall include the following documentation:

.1 updated Progress Schedule;

.2 monthly subcontractor report;

.3 any other documentation required under the Supplemental General Conditions.

14.2 CONTRACTOR's Warranty of Title: CONTRACTOR warrants and guarantees that title to all Work, materials and equipment covered by any Application for Payment, whether incorporated in the Project or not, will pass to OWNER free and clear of all Liens no later than the time of payment to CONTRACTOR.

14.3 Review of Applications for Progress Payment:

14.3.1 Owner's Representative will, within seven (7) calendar days after receipt of each Application for Payment, either indicate a recommendation for payment and forward the Application for processing by OWNER, or return the Application to CONTRACTOR indicating Owner's Representative's reasons for refusing to recommend payment. In the latter case, CONTRACTOR shall make the necessary corrections and resubmit the Application.

14.3.2 Owner's Representative's recommendation of any payment requested in an Application for Payment will constitute a representation by Owner's Representative, based upon Owner's Representative's on-site observations of the executed Work and on Owner's Representative's review of the Application for Payment and the accompanying data and schedules, that to the best of Owner's Representative's knowledge, information and belief:

.1 the Work has progressed to the point indicated; and

.2 the quality of the Work is generally in accordance with the Contract Documents (subject to an evaluation of the Work as a functioning whole prior to or upon Substantial Completion, to the results of any subsequent tests called for in the Contract Documents, to a final determination of quantities and classifications for unit price Work, and to any other qualifications stated in the recommendation).

14.3.3 By recommending any such payment, Owner's Representative will not thereby be deemed to have represented that:

.1 exhaustive or continuous on-site inspections have been made to check the quality or the quantity of the Work;

.2 examination has been made to ascertain how or for what purpose CONTRACTOR has used money previously paid on account of the Contract Amount;

.3 CONTRACTOR's construction means, methods, techniques, sequences or procedures have been reviewed; or

.4 that there may not be other matters or issues between the parties that might entitle CONTRACTOR to be paid additionally by OWNER or entitle OWNER to withhold payment to CONTRACTOR.

14.4 Decisions to Withhold Payment:

14.4.1 OWNER may withhold or nullify the whole or part of any payment to such extent as may be necessary on account of:

.1 defective Work not remedied;

.2 third party Claims filed or reasonable evidence indicating probable filing of such Claims;

.3 failure of CONTRACTOR to make payments properly to Subcontractors for labor, materials or equipment;

.4 reasonable evidence that the Work cannot be completed for the unpaid balance of the Contract Amount;

.5 damage to OWNER or another contractor;

.6 reasonable evidence that the Work will not be completed within the Contract Time, and that the unpaid balance would not be adequate to cover actual or liquidated damages for the anticipated delay;

.7 failure of CONTRACTOR to submit a schedule of values in accordance with the Contract Documents;

.8 failure of CONTRACTOR to submit a submittal schedule in accordance with the Contract Documents;

.9 failure of CONTRACTOR to submit and update a construction Progress Schedule in accordance with the Contract Documents;

.10 failure of CONTRACTOR to maintain a record of changes on drawings and documents;

.11 failure of CONTRACTOR to maintain weekly payroll reports and, as applicable, provide copies of reports in a timely manner upon request of OWNER;

.12 failure of CONTRACTOR to submit monthly subcontractor reports;

.13 CONTRACTOR's neglect or unsatisfactory prosecution of the Work, including failure to clean up;

.14 failure of CONTRACTOR to comply with the Austin City Code, Chapter 2-9-A, as amended, “Minority-Owned and Women-Owned Business Enterprise Procurement Program;” or

.15 failure of CONTRACTOR to comply with any provision of the Contract Documents.

14.4.2 When the above reasons for withholding payment are removed, CONTRACTOR shall resubmit a statement for the value of Work performed. Payment will be made within thirty (30) calendar days of receipt of approved Application for Payment.

14.4.3 Subcontractors may request Partial Payment when the OWNER withholds payment of an invoice to the CONTRACTOR for any reason listed in Section 14.4.1. If payment is withheld by the OWNER, the CONTRACTOR shall notify all affected Subcontractors within two (2) working days of notice that payment is being withheld. Upon notification, Subcontractors may submit a formal written request for Partial Payment to the CONTRACTOR and OWNER. If directed by the OWNER, the CONTRACTOR shall within three (3) working days resubmit to the OWNER an invoice for the same period that includes only the work performed by the requesting Subcontractors during this period. The OWNER will review this resubmitted invoice in accordance with Section 14.3.1. Upon receipt of payment for the resubmitted invoice, CONTRACTOR shall pay the subcontractor within ten (10) Calendar Days in accordance with Section 6.4.7.

14.5 Delayed Payments: Should OWNER fail to make payment to CONTRACTOR of sum named in any Application for Payment within thirty (30) calendar days after the day on which OWNER received the mutually acceptable Application for Payment, then OWNER will pay to CONTRACTOR, in addition to sum shown as due by such Application for Payment, interest thereon at the rate specified in Government Code, Section 2251.025(b) from date due until fully paid, which shall fully liquidate any injury to CONTRACTOR growing out of such delay in payment.

14.6 Arrears: No money shall be paid by OWNER upon any claim, debt, demand or account whatsoever, to any person, firm or corporation who is in arrears to City for taxes; and City shall be entitled to counterclaim and automatically offset against any such debt, claim, demand or account in the amount of taxes so in arrears and no assignment or transfer of such debt, claim, demand or account after said taxes are due, shall affect the right of OWNER to so offset said taxes, and associated penalties and interest if applicable, against the same.

14.7 Substantial Completion:

14.7.1 When the CONTRACTOR considers that the Work, or a portion thereof which the OWNER agrees to accept separately, is substantially complete, the CONTRACTOR shall notify Owner's Representative and request a determination as to whether the Work or designated portion thereof is substantially complete. If Owner's Representative does not consider the Work substantially complete, Owner's Representative will notify CONTRACTOR giving reasons therefor. After performing any required Work, CONTRACTOR shall then submit another request for Owner's Representative to determine Substantial Completion. If Owner's Representative considers the Work substantially complete, Owner's Representative will prepare and deliver a certificate of Substantial Completion which shall establish the date of Substantial Completion, shall include a punch list of items to be completed or corrected before final payment, shall establish the time within which CONTRACTOR shall finish the punch list, and shall establish responsibilities of the OWNER and CONTRACTOR for security, maintenance, heat, utilities, damage to the Work, warranty and insurance. Failure to include an item on the punch list does not alter the responsibility of CONTRACTOR to complete all Work in accordance with the Contract Documents. If a Certificate of Occupancy is required by public authorities having jurisdiction over the Work, said certificate shall be issued before the Work or any portion thereof is considered substantially complete. The certificate of Substantial Completion shall be signed by OWNER and CONTRACTOR to evidence acceptance of the responsibilities assigned to them in such certificate.

14.7.2 OWNER shall have the right to exclude CONTRACTOR from the Work after the date of Substantial Completion, but OWNER will allow CONTRACTOR reasonable access to complete or correct items on the punch list and complete warranty work.

14.8 Partial Utilization: Use by OWNER, at OWNER's option, of any substantially completed part of the Work which: (i) has specifically been identified in the Contract Documents, or (ii) OWNER and CONTRACTOR agree constitutes a separately functioning and usable part of the Work that can be used by OWNER for its intended purpose without significant interference with CONTRACTOR's performance of the remainder of the Work, may be accomplished prior to Substantial Completion of all the Work in accordance with the following:

14.8.1 OWNER at any time may request CONTRACTOR to permit OWNER to use any such part of the Work which OWNER believes to be ready for its intended use and substantially complete. If CONTRACTOR agrees that such part of the Work is substantially complete, CONTRACTOR shall certify to Owner's Representative that such part of the Work is substantially complete and request Owner's Representative to issue a certificate of substantial Completion for that part of the Work. CONTRACTOR at any time may notify Owner's Representative that CONTRACTOR considers any such part of the Work ready for its intended use and substantially complete and request Owner's Representative to issue a certificate of Substantial Completion for that part of the Work. The provisions of paragraphs 14.7.1 and 14.7.2 will apply with respect to certification of Substantial Completion of that part of the Work and the division of responsibility in respect thereof and access thereto.

14.8.2 Such partial utilization is authorized by public authorities having jurisdiction over the Work.

14.9 Final Inspection: Upon Written Notice from CONTRACTOR that the entire Work or an agreed portion thereof is complete, Owner's Representative will make a final inspection with CONTRACTOR and provide Written Notice of all particulars in which this inspection reveals that the Work is incomplete or defective. CONTRACTOR shall immediately take such measures as are necessary to complete such Work or remedy such deficiencies.

14.10 Final Application for Payment: CONTRACTOR may make application for final payment following the procedure for progress payments after CONTRACTOR has completed all such corrections to the satisfaction of Owner's Representative and delivered the following documents:

14.10.1 Affidavit by CONTRACTOR certifying the payment of all debts and claims;

14.10.2 Three (3) complete operating and maintenance manuals, each containing maintenance and operating instructions, schedules, guarantees, and other documentation required by the Contract Documents;

14.10.3 Record documents (as provided in paragraph 6.10);

14.10.4 Consent of surety, if any, to final payment. If surety is not provided, complete and legally effective releases or waivers (satisfactory to OWNER) of all claims arising out of or filed in connection with the Work;

14.10.5 Certificate evidencing that insurance required by the Supplemental General Conditions will remain in force after final payment and through the warranty period;

14.10.6 Non-Use of Asbestos Affidavit (After Construction);

14.10.7 Subcontractor report and all other documentation necessary for evaluation of CONTRACTOR's fulfillment of the Contract MBE/WBE or DBE goals;

14.10.8 Documentation of notice to claimants, to the extent applicable and subject to subparagraph 14.11.4; and

14.10.9 Any other documentation called for in the Contract Documents.

14.11 Final Payment and Acceptance:

14.11.1 If, on the basis of observation of the Work during construction, final inspection, and review of the final Application for Payment and accompanying documentation as required by the Contract Documents, Owner's Representative is satisfied that the Work has been completed and CONTRACTOR's other obligations under the Contract Documents have been fulfilled and there are no outstanding claims, Owner's Representative will recommend the final Application for Payment and thereby notify the OWNER, who will pay to CONTRACTOR the balance due CONTRACTOR under the terms of the Contract. If the sole remaining unfinished item to complete the Work is the reestablishment of vegetation, CONTRACTOR may execute a revegetation letter with fiscal posted (letter of credit) to ensure completion of this item. This Work must be accomplished within one hundred twenty (120) Calendar Days of the date of Final Completion of the Work. When the permanent erosion control has been established, OWNER will initiate an inspection for final acceptance of the erosion controls. If the revegetation is not completed within the one hundred twenty (120) Calendar Days, OWNER, at its option, may complete the Work using the posted fiscal.

14.11.2 If the Contract measures Contract Time to Final Completion, rather than Substantial Completion, Owner's Representative will issue a letter of final acceptance to CONTRACTOR which establishes the Final Completion date and initiates the one-year warranty period. If the sole remaining unfinished item to complete the Work is the reestablishment of vegetation and CONTRACTOR has executed a revegetation letter with fiscal posted (letter of credit) to ensure completion of this item, the Owner’s Representative will issue a letter of conditional acceptance to CONTRACTOR which established the Final Completion date and initiates the one-year warranty period.

14.11.3 Final payment is considered to have taken place when CONTRACTOR or any of its representatives negotiates OWNER's final payment check, whether labeled final or not, for cash or deposits check in any financial institution for its monetary return.

14.11.4 The OWNER will withhold funds sufficient to cover the amount of any unresolved contract claims from final payment for six months under the following limited conditions:

.1 CONTRACTOR must provide written notice to the claimant (via certified mail or hand delivery) that (i) OWNER will hold funds in the amount of the disputed claim for six (6) months from the date of the receipt of the notice and (ii) CONTRACTOR and the claimant have certain alternative dispute resolution rights; and

.2 CONTRACTOR must provide OWNER with a copy of the receipted notice.

Provided the claimant has received notice under this section, OWNER will release the withheld funds, if the CONTRACTOR provides a bond in substantial compliance with the provisions of Section 52.231 of the Texas Property Code; when the OWNER receives a settlement or release of the claim with accompanying instructions regarding payment; upon resolution of the claim in litigation, if suit is filed within such six (6) month period and the OWNER receives written notice of such filing; or when such six (6) month period has passed, if no such bond, settlement, release, or notice of filing of suit have been received. The above provisions notwithstanding, if efforts to timely resolve a disputed claim are not

being made to OWNER'S reasonable satisfaction, OWNER may, in its complete discretion, file an interpleader action and deposit the withheld funds in the registry of a court of competent jurisdiction. In addition, CONTRACTOR must include a provision in each of its subcontracts that the prevailing party in any litigation arising thereunder will be entitled to recover its costs of court and reasonable attorney's fees.

14.12 Waiver of Claims: The making and acceptance of final payment will constitute:

14.12.1 a waiver of claims by OWNER against CONTRACTOR, except claims arising from unsettled claims, from defective Work appearing after final inspection, from failure to comply with the Contract Documents or the terms of any warranty specified therein, or from CONTRACTOR's continuing obligations under the Contract Documents; and

14.12.2 a waiver of all claims by CONTRACTOR against OWNER other than those previously made in writing and still unsettled.

ARTICLE 15 - SUSPENSION OF WORK AND TERMINATION

15.1 OWNER May Suspend Work Without Cause: At any time and without cause, OWNER may suspend the Work or any portion thereof for a period of not more than ninety (90) calendar days by Written Notice to CONTRACTOR which will fix the date on which the Work will be resumed. CONTRACTOR shall resume the Work on the date so fixed. CONTRACTOR shall be allowed an adjustment in the Contract Amount or an extension of the Contract Times, or both, directly attributable to any such suspension if CONTRACTOR makes an approved Claim therefor as provided in Articles 11 and 12.

15.2 OWNER May Terminate Without Cause: Upon seven (7) calendar days' Written Notice to CONTRACTOR, OWNER may, without cause and without prejudice to any right or remedy of OWNER, elect to terminate the Agreement. In such case, CONTRACTOR shall be paid (without duplication of any items):

15.2.1 for completed and acceptable Work executed in accordance with the Contract Documents prior to the effective date of termination;

15.2.2 for reasonable demobilization costs;

15.2.3 for anticipated profits on completed and accepted Work not previously paid and not included in separate pay items calculated to date of termination but not for anticipated profit on the entire Contract not previously paid, unabsorbed overhead, or lost opportunity; and

15.2.4 for all claims incurred in settlement of terminated contracts with Subcontractors, Suppliers and others, including for anticipated profits on completed and accepted Work not previously paid and not included in separate pay items calculated to date of termination but not for anticipated profit on the entire Contract not previously paid, unabsorbed overhead, or lost opportunity. CONTRACTOR agrees to negotiate in good faith with Subcontractors, Suppliers and others to mitigate OWNER's cost.

15.3 OWNER May Terminate With Cause:

15.3.1 Upon the occurrence of any one or more of the following events:

.1 if CONTRACTOR persistently fails to perform the Work in accordance with the Contract Documents;

.2 if CONTRACTOR disregards laws or regulations of any public body having jurisdiction;

.3 if CONTRACTOR disregards the authority of Owner's Representative;

.4 if CONTRACTOR makes fraudulent statements;

.5 if CONTRACTOR fails to maintain a work force adequate to accomplish the Work within the Contract Time;

.6 if CONTRACTOR fails to make adequate progress and endangers successful completion of the Contract; or

.7 if CONTRACTOR otherwise violates in any substantial way any provisions of the Contract Documents;

OWNER may, after giving CONTRACTOR (and the surety, if any) seven (7) calendar days Written Notice terminate the services of CONTRACTOR. OWNER, at its option, may proceed with negotiation with surety for completion of the Work. Alternatively, OWNER may under these circumstances exclude CONTRACTOR from the site and take possession of the Work (without liability to CONTRACTOR for trespass or conversion), incorporate in the Work all materials and equipment stored at the site or for which OWNER has paid CONTRACTOR but which are stored elsewhere, and finish the Work as OWNER may deem expedient. In such case CONTRACTOR shall not be entitled to receive any further payment until the Work is finished. If the unpaid balance of the Contract Amount exceeds all claims, costs, losses and damages sustained by OWNER arising out of or resulting from completing the Work, such excess will be paid to CONTRACTOR. If such claims, costs, losses and damage exceed such unpaid balance, CONTRACTOR or surety shall pay the difference to OWNER. In the event that a termination for cause is found to be wrongful, the termination shall be converted to a termination without cause as set forth in Section 15.2 and CONTRACTOR'S remedy for wrongful termination is limited to the recovery of the payments permitted for termination without cause as set forth in Section 15.2.

15.3.2 Where CONTRACTOR's services have been so terminated by OWNER, the termination will not affect any rights or remedies of OWNER against CONTRACTOR and surety then existing or which may thereafter accrue. Any retention or payment of moneys due CONTRACTOR by OWNER will not release CONTRACTOR from liability. In the event OWNER terminates Contract with cause, OWNER may reject any and all Bids submitted by CONTRACTOR for up to three (3) years after the date of such termination. These Progressive Sanctions will be administered in accordance with the City of Austin Purchasing Office Probation, Suspension, and Debarment Procedures for Vendors, which include notice and an opportunity for a hearing.

15.4 CONTRACTOR May Stop Work or Terminate: If through no act or fault of CONTRACTOR, the Work is suspended for a period of more than ninety (90) calendar days by OWNER or under an order of court or other public authority, or (except during disputes) Owner's Representative fails to forward for processing any mutually acceptable Application for Payment within thirty (30) calendar days after it is submitted, or (except during disputes) OWNER fails for sixty (60) calendar days after it is submitted to pay CONTRACTOR any sum finally determined by OWNER to be due, then CONTRACTOR may, upon seven (7) calendar days' Written Notice to OWNER, and provided OWNER does not remedy such suspension or failure within that time, terminate the Agreement and recover from OWNER payment on the same terms as provided in paragraph 15.2. In lieu of terminating the Agreement and without prejudice to any other right or remedy, if (except during disputes) Owner's Representative has failed to forward for processing any mutually acceptable Application for Payment within thirty (30) calendar days after it is submitted, or (except during disputes)

OWNER has failed for sixty (60) calendar days after it is submitted to pay CONTRACTOR any sum finally determined by OWNER to be due, CONTRACTOR may upon seven (7) calendar days' Written Notice to OWNER stop the Work until payment of all such amounts due CONTRACTOR, including interest thereon. The provisions of this paragraph 15.4 are not intended to preclude CONTRACTOR from making a Claim under Articles 11 and 12 for an increase in Contract Amount or Contract Times or otherwise for expenses or damage directly attributable to CONTRACTOR's stopping Work as permitted by this paragraph.

15.5 Discretionary Notice to Cure: In its complete discretion, OWNER may, but is not required to, provide a Notice to Cure to CONTRACTOR and its surety to cure an event of default described above and/or an anticipatory breach of contract and, if required by OWNER, to attend a meeting with OWNER, regarding the Notice to Cure, the event of default, and/or the anticipatory breach of contract. The Notice to Cure will set forth the time limit in which the cure is to be completed or commenced and diligently prosecuted. Upon receipt of any Notice to Cure, CONTRACTOR shall prepare a report describing its program and measures to affect the cure of the event of default and/or anticipatory breach of contract within the time required by the Notice to Cure. The CONTRACTOR'S report must be delivered to OWNER at least three (3) days prior to any requested meeting with the OWNER and surety.

15.6 Bankruptcy: If CONTRACTOR declares bankruptcy or is adjudged bankrupt or makes an assignment for the benefit of creditors or if a receiver is appointed for the benefit of creditors or if a receiver is appointed by reason of CONTRACTOR'S insolvency, CONTRACTOR may be unable to perform this Contract in accordance with the Contract requirements. In such an event, OWNER may demand CONTRACTOR or its successor in interest provide OWNER with adequate assurance of CONTRACTOR'S future performance in accordance with the terms and conditions of the Contract. If CONTRACTOR fails to provide adequate assurance of future performance to OWNER'S reasonable satisfaction within ten (10) days of such a request, OWNER may terminate the CONTRACTOR'S services for cause or without cause, as set forth above. If CONTRACTOR fails to provide timely adequate assurance of its performance and actual performance, OWNER may prosecute the Work with its own forces or with other contractors on a time and material or other appropriate basis and the cost of which will be charged against the Contract balance.

15.7 Duty to Mitigate: In the event of any termination or suspension under this Contract, the CONTRACTOR agrees to and shall take all reasonable actions to mitigate its damages and any and all claims which may be asserted against the OWNER.

15.8 Responsibility during Demobilization: While demobilizing, the CONTRACTOR will take all necessary and reasonable actions to preserve and protect the Work, the site and other property of the OWNER or others at the site.

ARTICLE 16 - DISPUTE RESOLUTION

16.1 Filing of Claims:

16.1.1 Claims arising from the circumstances identified in paragraphs 3.2, 4.1, 4.2.2, 4.2.4, 6.4.2, 6.11.5.2, 6.17, 7.5, 8.6, 9.5, 10.4.2, 13.4.3, 13.8, 13.9, 15.1, 15.2, 15.3, or 15.4, or other occurrences or events, shall be made by Written Notice delivered by the party making the Claim to the other party within thirty (30) calendar days after the start of the occurrence or event giving rise to the Claim and stating the general nature of the Claim. Notice of the amount of the Claim with supporting data shall be delivered in writing within thirty (30) calendar days after Written Notice of Claim is delivered by claimant and shall represent that the adjustment claimed covers all known amounts and/or extensions of time to which claimant is entitled.

16.1.2 Within thirty (30) calendar days of receipt of notice of the amount of the Claim with supporting data, Owner's Representative and CONTRACTOR shall meet to discuss the Claim, after which an offer of settlement or notification of no settlement offer will be made to claimant. If claimant is not satisfied with the proposal presented, claimant shall have thirty (30) calendar days in which to: (i) submit additional supporting data requested by the other party; (ii) modify the initial Claim; or (iii) request Alternative Dispute Resolution.

16.2 Alternative Dispute Resolution:

16.2.1 If a dispute exists concerning a Claim, the parties agree to use the following procedure prior to pursuing any other available remedies. OWNER reserves the right to include the E/A as a party.

16.2.2 Negotiating with Previously Uninvolved Personnel: Either party may make a written request for a meeting to be held between representatives of each party within fourteen (14) Calendar Days of the request or such later period that the parties may agree to. Each party shall endeavor to include, at a minimum, one (1) previously uninvolved senior level decision maker (an owner, officer, or employee of each organization) empowered to negotiate on behalf of their organization. If a previously uninvolved senior level decision maker is unavailable due to the size of the CONTRACTOR'S organization or any other reason, the CONTRACTOR shall nonetheless provide an appropriate senior level decision maker for the meeting. The purpose of this and any subsequent meetings will be good faith negotiations of the matters constituting the dispute. Negotiations shall be concluded within thirty (30) Calendar Days of the first meeting, unless mutually agreed otherwise. This step may be waived by a written agreement signed by both parties, in which event the parties may proceed directly to mediation as described below.

16.2.3 Mediation:

.1 If the procedure described in 16.2.2 proves unsuccessful or is waived pursuant to its terms, the parties shall initiate the mediation process. OWNER and CONTRACTOR agree to select within thirty (30) calendar days a mediator trained in mediation skills, to assist with resolution of the dispute. OWNER and CONTRACTOR agree to act in good faith in the selection of the mediator and to give consideration to qualified individuals nominated to act as mediator. Nothing in this agreement prevents the parties from relying on the skills of a person who also is trained in the subject matter of the dispute and/or a contract interpretation expert. Should the parties fail to agree on a mediator within thirty (30) calendar days of initiation of the mediation process, the parties agree to ask the Travis County Dispute Resolution Center to select a qualified individual, which selection shall be binding on the parties.

.2 Mediation is a forum in which an impartial person, the mediator, facilitates communication between parties to promote reconciliation, settlement, or understanding among them. The parties hereby agree that mediation, at a minimum, shall provide for (i) conducting an on-site investigation, if appropriate, by the mediator for fact gathering purposes, (ii) a meeting of all parties for the exchange of points of view and (iii) separate meetings between the mediator and each party to the dispute for the formulation of resolution alternatives. The parties agree to participate in mediation in good faith for up to thirty (30) calendar days from the date of the first mediation session, unless mutually agreed otherwise. Should the parties fail to reach a resolution of the dispute through mediation, then each party is released to pursue other remedies available to them.

16.3 Resolution of Disputes between Contractor and Subcontractor or Supplier: If a dispute exists concerning a claim between a CONTRACTOR and a Subcontractor or Supplier, the CONTRACTOR agrees to participate with such Subcontractor and/or Supplier in a process substantially paralleling the steps set out in paragraphs 16.1 and 16.2 above, including the delivery of written notices, submission of supporting data, negotiation with previously uninvolved personnel, and, if such alternative dispute resolution process is unsuccessful, mediation between the parties to the claim. If the CONTRACTOR and Subcontractor or Supplier agreement provides an alternative dispute resolution process, which provides substantially equivalent rights to those set forth herein, it may be followed, unless the CONTRACTOR and affected Subcontractor or Supplier agree to follow the process outlined above. The OWNER is not a party to the alternative dispute resolution process between the CONTRACTOR and Subcontractor or Supplier and will not pay any costs incurred in the process. Each party will be responsible for its own expenses incurred in the process, which will include an equal share of the mediation expenses, unless otherwise determined by the mediator. NOTICE: THE PROCESS SET FORTH HEREIN IS NOT A SUBSTITUTE FOR THE STATUTORY PAYMENT BOND CLAIM PROCESS.

16.4 Claim Calculation:

16.4.1 Delay Claims: The intent of paying for delay damages is to reimburse the CONTRACTOR for actual expense arising out of a compensable delay. No profit or force account markups, other than labor burden, will be allowed for delay claims by the CONTRACTOR seeking reimbursement for expenses arising out of an alleged event of delay. No consequential damages will be allowed to the CONTRACTOR in connection with any claimed delays. If the CONTRACTOR requests compensation for delay damages and the delay is determined to be compensable, then standby equipment costs and project overhead compensation will be based on the duration of the compensable delay and the following:

.1 Standby equipment costs will not be allowed during periods when the equipment would have otherwise been idle. Standby equipment time will not exceed more than eight (8) hours per twenty-four (24) hour day, forty (40) hours per week, and one hundred seventy-six (176) hours per month. Standby equipment costs will be paid at 50 percent (50%) of the applicable Rental Rate Blue Book rates and calculated by dividing the monthly rate by one hundred seventy-six (176), multiplying the result by the number of standby hours and multiplying that number by the regional adjustment factor and the rate adjustment factor contained in the Blue Book. Operating costs will not be allowed.

.2 Project overhead will be determined from actual costs that the CONTRACTOR will be required to document. Project overhead is defined as the administrative and supervisory expenses incurred at the work site and will not include home office overhead.

16.4.2 General: Except as limited with respect to delay claims, as set forth above, the criteria set forth in Section 11.4.1 may be used as a basis to calculate an adjustment in the Contract Amount in the resolution of a claim, provided that there will be no compensation for home office overhead.

16.5 MBE/WBE Program Progressive Sanctions: CONTRACTOR is subject to progressive sanctions for failure of CONTRACTOR to comply with Austin City Code, Chapter 2-9A, as amended: “Minority-owned and Women-owned Business Enterprise Procurement Program.” Available sanctions for Program violations are set forth in Program rules adopted by the Small and Minority Business Resources Department (SMBR), as amended, and may include the following progressive sanctions for Program violations within a rolling 24-month period: (i) a period of probation for up to six (6) months for the first violation (ii) a period of suspension from bidding for up to 24 months for the second violation, and (iii) a period of

debarment for up to five (5) years for the third violation. If the CONTRACTOR engages in more than one of the violations listed below at any given time, OWNER has the discretion to determine whether such actions should be counted as multiple violations of the MBE/WBE Ordinance. Program violations include:

.1 providing false or misleading information to the OWNER in connection with the submission of a Bid, responses to request for qualifications or Proposals, Good Faith Efforts documentation, post award compliance or other Program operations;

.2 substituting M/WBE Subcontractors without first receiving approval for such substitutions;

.3 failure to comply with the approved Compliance Plan without an approved request for a change, an approved Change Order or other approved change to the Contract;

.4 violation of any other provision of the "Minority-owned and Women-owned Business Enterprise Procurement Program";

.5 providing false or misleading information to the OWNER in connection with an application for or challenge to certification, recertification or decertification as a MBE/WBE; and

.6 bid shopping.

The Progressive Sanctions will be administered in accordance with the City of Austin Purchasing Office Probation, Suspension, and Debarment Procedures for Vendors, which includes notice and an opportunity for a hearing.

ARTICLE 17 – MISCELLANEOUS

17.1 Venue: In the event of any suit at law or in equity involving the Contract, venue shall be exclusively in Travis County, Texas and the laws of the State of Texas shall apply to the interpretation and enforcement of the Contract.

17.2 Extent of Agreement: This Contract represents the entire and integrated agreement between the OWNER and CONTRACTOR with respect to the subject matter hereof and supersedes all prior negotiations, representations or agreements, either written or oral.

17.3 Cumulative Remedies: The rights and remedies available to the parties are not to be construed in any way as a limitation of any rights and remedies available to any or all of them which are otherwise imposed or available by laws or regulations, by special warranty or guarantees or by other provisions of the Contract Documents, and the provisions of this paragraph will be as effective as if repeated specifically in the Contract Documents in connection with each particular duty, obligation, right and remedy to which they apply. Specifically, the OWNER is not required to only assess liquidated damages, and OWNER may elect to pursue its actual damages resulting from the failure of the CONTRACTOR to complete the Work in accordance with the requirements of the Contract Documents.

17.4 Severability: If any word, phrase, clause, sentence or provision of the Contract, or the application of same to any person or set of circumstances is for any reason held to be unconstitutional, invalid or unenforceable, that finding shall only effect such word, phrase, clause, sentence or provision, and such finding shall not affect the remaining portions of this Contract; this being the intent of the parties in entering into the Contract; and all provisions of the Contract are declared to be severable for this purpose.

17.5 Independent Contractor: The Contract shall not be construed as creating an employer/employee relationship, a partnership, or a joint venture. CONTRACTOR is an independent contractor and CONTRACTOR's services shall be those of an independent contractor. CONTRACTOR agrees and understands that the Contract does not grant any rights or privileges established for employees of OWNER.

17.6 Prohibition of Gratuities: OWNER may, by Written Notice to CONTRACTOR, terminate the Contract without liability if is determined by OWNER that gratuities were offered or given by CONTRACTOR or any agent or representative of CONTRACTOR to any officer or employee of OWNER with a view toward securing the Contract or securing favorable treatment with respect to the awarding or amending or the making of any determinations with respect to the performing of such Contract. In the event the Contract is terminated by OWNER pursuant to this provision, OWNER shall be entitled, in addition to any other rights and remedies, to recover or withhold the amount of the cost incurred by CONTRACTOR in providing such gratuities.

17.7 Prohibition Against Personal Interest in Contracts: No officer, employee, independent consultant, or elected official of OWNER who is involved in the development, evaluation, or decision-making process of the performance of any solicitation shall have a financial interest, direct or indirect, in the Contract resulting from that solicitation. Any violation of this provision, with the knowledge, expressed or implied, of CONTRACTOR shall render the Contract voidable by OWNER.

17.8 OWNER'S Right to Audit:

17.8.1 Records means all records generated by or on behalf of CONTRACTOR and each Subcontractor and Supplier of CONTRACTOR, whether paper, electronic, or other media, which are in any way related to performance of or compliance with this Contract, including, without limitation:

.1 accounting records;

.2 written policies and procedures;

.3 subcontract files (including proposals of successful and unsuccessful Bidders, Bid recaps, etc.);

.4 original estimates and estimating work sheets;

.5 correspondence;

.6 Change Order files (including documentation covering negotiated settlements);

.7 back charge logs and supporting documentation;

.8 general ledger entries detailing cash and trade discounts earned, insurance rebates and dividends;

.9 lump sum agreements between CONTRACTOR and any Subcontractor or Supplier;

.10 records necessary to evaluate: Contract compliance, Change Order pricing, and any Claim submitted by CONTRACTOR or any of its payees; and

.11 any other CONTRACTOR record that may substantiate any charge related to this Contract.

17.8.2 CONTRACTOR shall allow OWNER'S agent or its authorized representative to inspect, audit, and/or reproduce, or all three, all Records generated by or on behalf of CONTRACTOR and each Subcontractor and Supplier, upon OWNER'S written request. Further, CONTRACTOR shall allow OWNER'S agent or authorized

representative to interview any of CONTRACTOR'S employees, all Subcontractors and all Suppliers, and all their respective employees.

17.8.3 CONTRACTOR shall retain all its Records, and require all its Subcontractors and Suppliers to retain their respective Records, during this Contract and for three (3) years after final payment, until all audit and litigation matters that OWNER has brought to the attention of CONTRACTOR are resolved, or as otherwise required by law, whichever is longer. OWNER'S right to inspect, audit, or reproduce Records, or interview employees of CONTRACTOR or its respective Subcontractors or Suppliers exists during this Contract, and for three (3) years after final payment, until all audit and litigation matters that OWNER has brought to CONTRACTOR'S attention are resolved, or as otherwise required by law, whichever is longer, and at no cost to OWNER, either from CONTRACTOR or any of its Subcontractors or Suppliers that may furnish Records or make employees available for interviewing.

17.8.4 CONTRACTOR must provide sufficient and accessible facilities during its normal business hours for OWNER to inspect, audit, or reproduce Records, or all three, and to interview any person about the Records.

17.8.5 CONTRACTOR shall insert these requirements in each written contract between CONTRACTOR and any Subcontractor or Supplier and require each Subcontractor and Supplier to comply with these provisions.

17.9 Survival: The terms and conditions of this Contract, which contemplate a period of time beyond completion or termination will survive such completion or termination and not be merged therein or otherwise terminated.

17.10 No Waiver: The waiver of any provision of this Contract will not be deemed to be a waiver of any other provision of this Contract. No waiver of any provision of this Contract will be deemed to constitute a continuing waiver unless expressly provided in writing, nor will a waiver of any default be deemed a waiver of any subsequent defaults of the same type. The failure at any time to enforce this Contract, whether the default is known or not, shall not constitute a waiver or estoppel of the right to do so.

17.11 Conditions Precedent to Right to Sue: Notwithstanding anything herein to the contrary, the CONTRACTOR will have at least 90 days to give notice of a claim for damages as a condition precedent to the right to sue on the Contract, subject to the contractual claim and alternative dispute resolution processes set forth herein.

17.12 Waiver of Trial by Jury: OWNER and CONTRACTOR agree that they have knowingly waived the right to trial by jury and have instead agreed that, in the event of any litigation arising out of or connected to this Contract, to proceed with a trial before the court, unless both parties subsequently agree otherwise in writing.

17.13 Contractor Evaluation: The Owner will review and evaluate the Contractor's Work and performance on the Project and provide the Contractor with a written Contractor Evaluation Report in accordance with City of Austin Administrative Rule R161-13.37. Rule R161-13.37 provides an appeal process.

http://www.austintexas.gov/department/contract-management

End

The Supplemental General Conditions contained herein amend or supplement the General Conditions, Section 00700.

ARTICLE 1 - DEFINITIONS

1.11 Contract: Add the following: "This Contract is an indefinite delivery/indefinite quantity (IDIQ) service contract that contains an indefinite quantity of Work and components of the Work and indefinite delivery dates.

1.1.2 Contract Amount: Add the following: "The final Contract Amount is equal to the aggregate of all executed Work Assignments not to exceed the amount authorized by Austin City Council."

1.18 Drawings: Add the following: "Drawings for Work Assignments to be completed during this Contract period are not included in the Bid Documents. Drawings for individual Work Assignments will be provided to the CONTRACTOR with Work Assignments throughout the Contract period as Work Assignments are issued on an as-needed basis."

1.20 Engineer/Architect (E/A): Add the following:

"Name: Joe Hoepken, P.E.

Address: 3907 S. Industrial Drive

Austin, TX 78744"

Add the following definitions:

1.51 Work Assignment: " The OWNER will initiate work under this IDIQ contract as individual Work Assignments. Each individual Work Assignment will define the scope, identify the subcontractors and confirm the Contract Time for the specific Work Assignment to be performed. Given the context of the scope of Work under this Contract and the method of determining the Contract Amount and Contract Time for each Work Assignment, each Work Assignment will be considered to be the equivalent of a negotiated Change Order based upon the unit prices and other applied factors."

1.52 Allowance: Allowance is defined as "a not-to-be-exceeded amount", either individually or in the aggregate, which is established between the OWNER and the CONTRACTOR as part of the bid documents when the precise scope of a particular line item(s) has not been defined to a level which is adequate for the CONTRACTOR to provide a definitive line item pricing for that particular scope of Work. The use of any Allowances by the CONTRACTOR will be subject to the OWNER's sole approval and it is the OWNER's intent to minimize the use of Allowances to the fullest extent possible. The aggregate amount of all Work Assignment payments for Mobilization will not exceed the Allowance. An allowance for CONTRACTOR's mobilization has been established by the OWNER, as mobilization requirements may vary from Work site to Work site. The CONTRACTOR will be paid for mobilization of personnel, equipment and materials to the Work site from this allowance. Typically, only one mobilization will be paid per Work Assignment, and the amount to

be paid for mobilization for a given Work Assignment is defined in Section 01020-IDIQ, Mobilization.

1.53 Contract Time: The duration of time to complete each Work Assignment. The Contract Time will be included in each Work Assignment and must be completed within that time. For all Work Assignments not completed within the Contract Time, liquidated damages will be assessed per day and will be calculated separately for each Work Assignment.

ARTICLE 2 – PRELIMINARY MATTERS

2.3 Commencement of Contract Time: Notice To Proceed ("NTP"): Delete in its entirety and replace with the following:

"The date that the Work Assignment is signed by the OWNER and delivered to the CONTRACTOR with an accompanying Notice to Proceed will be the commencement date for the purposes of the measurement of Contract Time for that individual Work Assignment."

"The OWNER will issue a written NTP for each Work Assignment describing the Work to be performed and the time allowed for the completion of the Work, as described in Section 01010-IDIQ, Summary of Work. CONTRACTOR agrees to commence each Work Assignment within the time set forth in subsequently issued NTP describing such Work Assignment and to substantially complete such Work Assignment within the time set forth in such NTP. Contract Time for specific Work Assignments is of the essence and all Work shall be completed within the stated duration of each assignment. "

2.4 Before Starting Construction:

Delete 2.4.2.1 and replace with the following (changes to the original text are identified by underlining):

"**.1** to the extent not sufficiently set forth in the NTP and as required by OWNER's Representative, a preliminary progress schedule indicating the times (number of days or dates) for starting and completing the various stages of the Work, including any Milestones specified in the Contract Documents, identifying the critical path for completing the Work, identifying when all Subcontractors will be utilized, and taking into consideration any limitations on Working Hours;"

ARTICLE 3 – CONTRACT DOCUMENTS: INTENT, AMENDING, REUSE

3.1 Intent: Add the following:

"3.1.3 Federal Aid - Assurances: In the event that a Work Assignment is federally funded, the federal contracting provisions set forth in Section 00810A, and any additional requirements from the funding agency, will be required contract provisions and will be part of the Work Assignment for all purposes. The provisions of Section 00810A are intended to supplement and supersede and be controlling over the City's standard 00700 General

Conditions and other Contract Document provisions to the extent of any conflict with Section 00810A. The CONTRACTOR/Bidder acknowledges and agrees that CONTRACTOR/Bidder has the obligation to comply with the attached federal-aid assurances and contract provisions. This Section 3.1.3 will constitute the CONTRACTOR's/Bidder's accepted proposal and agreement with respect to the attached federal-aid assurances and contract provisions.

In the event of any ambiguity or inconsistency between the Section 00810A federal aid assurances and the Contract Documents, the federal provision will control to the extent consistent with the overall intent of the respective Work Assignment. Notice of a federal award will be specified in the Work Assignment. The prevailing wage rates, Section 00830, will be replaced with the current wage rates at the time of the federal assignment. Additional federal requirements, if applicable, will be provided to CONTRACTOR with the respective Work Assignment. If the CONTRACTOR/Bidder has any questions as to the applicability of a Section 00700 or Section 00810A provision or any federal requirement, the CONTRACTOR/Bidder shall submit a request for information to the OWNER. The OWNER will have three (3) business days in which to respond."

ARTICLE 4 - AVAILABILITY OF LANDS; SUBSURFACE AND PHYSICAL CONDITIONS; REFERENCE POINTS

4.1 Availability of Lands: Add the following:

"CONTRACTOR shall contact OWNER's Transportation Department to obtain a Temporary Use of Right-of-Way Permit prior to beginning construction on any sidewalk/driveway or occupying any parking area/meters within the public right-of-ways."

ARTICLE 5 - BONDS AND INSURANCE

"5.3 Insurance:

5.3.1 CONTRACTOR Provided Insurance

5.3.1.1 General Requirements.

.1 CONTRACTOR shall carry insurance in the types and amounts indicated below for the duration of the Contract, which shall include items owned by OWNER in the care, custody and control of CONTRACTOR prior to and during construction and warranty period.

.2 CONTRACTOR must complete and forward the Certificate of Insurance, Section 00650, to OWNER before the Contract is executed as verification of coverage required below. CONTRACTOR shall not commence Work until the required insurance is obtained and until such insurance has been reviewed by OWNER. Approval of insurance by OWNER shall not relieve or decrease the liability of CONTRACTOR hereunder and shall not be construed to be a limitation of liability on the part of CONTRACTOR. CONTRACTOR must also complete and forward the

Certificate of Insurance, Section 00650, to OWNER whenever a previously identified policy period has expired as verification of continuing coverage.

.3 CONTRACTOR's insurance coverage is to be written by companies licensed to do business in the State of Texas at the time the policies are issued and shall be written by companies with A.M. Best ratings of B+VII or better, except for hazardous material insurance which shall be written by companies with A.M. Best ratings of A- or better.

.4 All endorsements naming the OWNER as additional insured, waivers, and notices of cancellation endorsements as well as the Certificate of Insurance shall indicate: City of Austin, Capital Contracting Office, P.O. Box 1088, Austin, Texas 78767.

.5 The "other" insurance clause shall not apply to the OWNER where the OWNER is an additional insured shown on any policy. It is intended that policies required in the Contract, covering both OWNER and CONTRACTOR, shall be considered primary coverage as applicable.

.6 If insurance policies are not written for amounts specified below, CONTRACTOR shall carry Umbrella or Excess Liability Insurance for any differences in amounts specified. If Excess Liability Insurance is provided, it shall follow the form of the primary coverage.

.7 OWNER shall be entitled, upon request and without expense, to receive certified copies of policies and endorsements thereto and may make any reasonable requests for deletion or revision or modification of particular policy terms, conditions, limitations, or exclusions except where policy provisions are established by law or regulations binding upon either of the parties hereto or the underwriter on any such policies.

.8 OWNER reserves the right to review the insurance requirements set forth during the effective period of this Contract and to make reasonable adjustments to insurance coverage, limits, and exclusions when deemed necessary and prudent by OWNER based upon changes in statutory law, court decisions, the claims history of the industry or financial condition of the insurance company as well as CONTRACTOR.

.9 CONTRACTOR shall not cause any insurance to be canceled nor permit any insurance to lapse during the term of the Contract or as required in the Contract.

.10 CONTRACTOR shall be responsible for premiums, deductibles and self-insured retentions, if any, stated in policies. All deductibles or self-insured retentions shall be disclosed on the Certificate of Insurance.

.11 CONTRACTOR shall provide OWNER thirty (30) days written notice of erosion of the aggregate limits below occurrence limits for all applicable coverages indicated within the Contract.

.12 If OWNER owned property is being transported or stored off-site by CONTRACTOR, then the appropriate property policy will be endorsed for transit and storage in an amount sufficient to protect OWNER's property.

.13 The insurance coverages required under this contract are required minimums and are not intended to limit the responsibility or liability of CONTRACTOR.

5.3.1.2 Business Automobile Liability Insurance. Provide coverage for all owned, non-owned and hired vehicles. The policy shall contain the following endorsements in favor of OWNER:

a) Waiver of Subrogation endorsement CA 0444;

b) 30 day Notice of Cancellation endorsement CA 0244; and

c) Additional Insured endorsement CA 2048.

Provide coverage in the following types and amounts:

.1 A minimum combined single limit of $1,000,000 per occurrence for bodily injury and property damage.

5.3.1.3 Workers' Compensation And Employers' Liability Insurance. Coverage shall be consistent with statutory benefits outlined in the Texas Workers' Compensation Act (Section 401). CONTRACTOR shall assure compliance with this Statute by submitting two (2) copies of a standard certificate of coverage (e.g. ACCORD form) to OWNER's Representative for every person providing services on the Project as acceptable proof of coverage. The Certificate of Insurance, Section 00650, must be presented as evidence of coverage for CONTRACTOR. Workers' Compensation Insurance coverage written by the Texas Workers Compensation Fund is acceptable to OWNER. CONTRACTOR's policy shall apply to the State of Texas and include these endorsements in favor of OWNER:

a) Waiver of Subrogation, form WC 420304; and

b) 30 day Notice of Cancellation, form WC 420601.

The minimum policy limits for Employers' Liability Insurance coverage shall be as follows:

.1 $100,000 bodily injury per accident, $500,000 bodily injury by disease policy limit and $100,000 bodily injury by disease each employee.

5.3.1.4 Commercial General Liability Insurance. The Policy shall contain the following provisions:

a) Contractual liability coverage for liability assumed under the Contract and all contracts relative to this Project.

b) Completed Operations/Products Liability for the duration of the warranty period.

c) Explosion, Collapse and Underground (X, C & U) coverage.

d) Independent Contractors coverage (Contractors/ Subcontractors work).

e) Aggregate limits of insurance per project, endorsement CG 2503.

f) OWNER listed as an additional insured, endorsements CG 2010 and CG 2037 or equivalent.

g) 30 day notice of cancellation in favor of OWNER, endorsement CG 0205.

h) Waiver of Transfer of Recovery Against Others in favor of OWNER, endorsement CG 2404.

Provide coverages A&B with minimum limits as follows:

.1 A combined bodily injury and property damage limit of $1,000,000 minimum per occurrence.

5.3.1.5 Professional Liability Insurance. For Work which requires professional engineering or professional survey services to meet the requirements of the Contract, including but not limited to excavation safety systems, traffic control plans, and construction surveying, the CONTRACTOR or Subcontractors, responsible for performing the professional

services shall provide Professional Liability Insurance with a minimum limit of $500,000 per claim and in the aggregate to pay on behalf of the assured all sums which the assured shall become legally obligated to pay as damages by reason of any negligent act, error, or omission committed with respect to all professional services provided in due course of the Work of this Contract."

ARTICLE 6 - CONTRACTOR'S RESPONSIBILITIES

6.11 Safety and Protection: Add the following to paragraph 6.11.3:

"6.11.3 At the minimum, the safety representative will be certified in personal protective equipment, hazard communication, demolition and blasting, trench/excavation, hand and power tools, welding/cutting, cranes/derricks/hoists/conveyors/, scaffolding, confined space, CPR and first aid."

ARTICLE 10 – CHANGE IN THE WORK: Add the following:

10.6 Actual Quantities:

This Contract is a unit-price IDIQ contract. Final quantities of materials and items of Work will vary depending upon the subsequently issued Work Assignments and actual conditions encountered through the term of the Contract. No "change" will occur unless the total Contract Amount is increased. The Contract Amount is not a guarantee of an amount of available Work. The amount of Work will be dependent upon subsequently issued Work Assignments and actual site conditions. Reduction of the Units used from those shown in the 00300U-IDIQ Bid Form or the total Contract Amount will not constitute a change. The optional terms are dependent upon funding by the City of Austin City Council for each such each year. In addition, the actual quantities to be used are unknown and depend upon actual site conditions and quantities of specific items will vary from those used in the bid. CONTRACTOR will accept and perform the quantities of Work necessary to complete individual Work Assignments, as determined by the OWNER.

ARTICLE 11 - CHANGE OF CONTRACT AMOUNT

11.4 Determination of Value of Work: Add the following to paragraph 11.4.1.2:

".2 In the case of a Change Order determined by a mutually agreed lump sum properly itemized and supported by sufficient substantiating data, including documentation by subcontractors performing the work, to permit evaluation, use the following method:

COMPONENT ONE

1a - the cost of labor (base rate, including fringe benefits),

1b - the cost of material and equipment to be incorporated in the Work, and

1c - the cost of tools, equipment and facilities necessary to accomplish the Work described in the change.

COMPONENT TWO - The cost of payroll taxes and insurance, Liability and Builder's Risk Insurance, shall be calculated as follows:

2a - Payroll taxes and Workers' Compensation Insurance - 25% of payroll (Item 1a)

2b - Liability and Builder's Risk Insurance -2% of "total costs" (Items 1a, 1b, 1c, and 2a)

COMPONENT THREE - Overhead and profit shall be calculated as follows:

3a - For Subcontractors and for those portions of the Work performed by CONTRACTOR'S own forces:

- 15% of the first $10,000.00 of costs and 10% of the balance over $10,000.00.
- ("costs" = Items 1a, 1b, and 1c, above, broken down into Contractor and Subcontractor costs).

3b - For the CONTRACTOR for that portion of the Work performed by Subcontractors:

- 10% of the first $10,000.00 of the Subcontractor costs and 7.5% of the balance over $10,000.00.
- ("costs" = Items 1a, 1b, and 1c, above, broken down into Subcontractor costs)

COMPONENT FOUR - Bonds

Performance and Payment Bond according to the following table ("TOTAL COST" = Items 1a, 1b, 1c, 2a, 2b, 3a and 3b,):

DOLLAR VALUE OF CONTRACT			% OF TOTAL COST OF CHANGE ORDER ADDED FOR BOND EXPENSE
100,000	or	less	2.5
100,001	thr	500,000	1.5
500,001	thr	2,500,000	1.0
2,500,00	thr	5,000,000	0.75
5,000,00	thr	7,500,000	0.70
OVER 7,500,000			0.65

The total costs for the change, whether additive or deductive, shall be the sum total of COMPONENTS ONE - FOUR.

11.4 Determination of Value of Work: Add the following to paragraph to the end of the list:

".5 Contract Extension Price Adjustment:

The OWNER may exercise its option by notice to the successful bidder/CONTRACTOR prior to the expiration of the initial term. The unit prices bid by the successful bidder/CONTRACTOR shall remain firm throughout the initial term of the Contract. Bid prices may be adjusted for Contract extensions on the basis of an increase or decrease of the existing prices

upwards or downwards in accordance with the 20 City average Engineering News Record Construction Cost Index (CCI) (at the time of the notice of contract extension) divided by the current area CCI at the time of bid. The adjusted prices will be included in a change order and will remain firm throughout the Contract extension period. Upon receipt of the notice of the exercise of the option for an additional contract term by the OWNER, the CONTRACTOR must request a Bid price adjustment in writing or the then current Bid prices will remain in force and effect. The prevailing wage rates, Section 00830, will be replaced at the time of an adjusted bid increase with the then current prevailing wage rates."

Unit Price Work: Delete 11.6.1, 11.6.4, and 11.6.5 and replace with the following:

"11.6.1 While the Contract Documents provide that all or part of the Work is to be unit price Work, quantities used in 00300U-IDIQ are indefinite, and are therefore not guaranteed, and are solely for the purpose of the evaluation and comparison of Bids. Determinations of the actual quantities and classifications of unit price work performed by CONTRACTOR will be made by OWNER's Representative. OWNER's Representative will review with CONTRACTOR the preliminary determinations on such matters before rendering a written decision thereon (by recommendation of an Application for Payment or otherwise)."

"11.6.4 Except as otherwise provided at the exercise of an additional one year option term, neither the OWNER nor CONTRACTOR may make any claim for adjustment in unit prices for differences in actual quantities relative to the bid quantities."

"11.6.5 Deleted."

ARTICLE 13 - TESTS AND INSPECTIONS; CORRECTION, REMOVAL OR ACCEPTANCE OF DEFECTIVE WORK

13.7 Warranty Period: Add the following:

"**13.7.5** OWNER will utilize a "Warranty Item Form" (attached at the end of this Section) for the purpose of providing Written Notice of warranty defects to CONTRACTOR. CONTRACTOR shall date, sign, complete and return the form to OWNER when the defect is corrected, including such information on or attached to the form to describe the nature of the repairs or corrections that were made. If the defect cannot be corrected in seven (7) Calendar Days, CONTRACTOR shall provide a written explanation to the OWNER's Representative describing the repairs needed and the time required completing the repairs."

ARTICLE 14 - PAYMENTS TO CONTRACTOR AND COMPLETION

14.1 Application for Progress Payment: Add the following to the list of items required with applications for payment:

".4 Pre-Construction and Construction Progress Photos."

14.7 Substantial Completion:

Reference 14.7.1, and add the following provision:

"**14.7.1.1** For water and wastewater lines construction, Substantial Completion means that the Work, including all testing and disinfection, has been completed and accepted and the line(s) placed into service. A certificate of Substantial Completion will not be issued. Work that remains after Substantial Completion could include the final pavement of roadways, adjustment of structures to final grade and re-vegetation. Owner's Representative will issue a notice specifying what portion of the Work is partially completed for the purpose of payment and what Work remains to be done on the portion being accepted as Substantially Complete. This subsection 14.7.1.1 changes the 00700 General Conditions definition of Substantial Completion."

Add the following:

"**14.7.3** Individual Work Assignments, as issued by the OWNER to the CONTRACTOR, will define Substantial Completion for individual projects."

14.8 Partial Utilization: Delete 14.8.1 and replace with the following (changes to the original text are identified by underlining):

".1 OWNER at any time may request CONTRACTOR to permit OWNER to use any such part of the Work which OWNER believes to be ready for its intended use and substantially complete. If CONTRACTOR agrees that such part of the Work is substantially complete, CONTRACTOR will certify to OWNER's Representative that such part of the Work is substantially complete and request OWNER's Representative to issue a <u>notice specifying what portion of the Work is substantially complete for the purpose of payment and what Work remains to be done on the portion being accepted</u>. CONTRACTOR at any time may notify OWNER's Representative that CONTRACTOR considers any such part of the Work ready for its intended use and substantially complete and request OWNER's Representative to issue a <u>notice specifying what portion of the Work is partially completed for the purpose of payment and what Work remains to be done on the portion being accepted</u>. The provisions of paragraphs 14.7.1 and 14.7.2 will apply with respect to <u>the notice specifying what portion of the Work is partially completed for the purpose of payment and what Work remains to be done on the portion being accepted.</u>"

WARRANTY ITEM NO. _____

(PROJECT NAME)

The General Conditions of the Contract require that Warranty Defects be corrected within 7 days after written notice is received.

TO: _____
contractor name address / telephone / fax / email

ATTENTION OF: _____

FROM: _____
project manager name / address / telephone / fax / email

PROJECT: _____
name / location / CIP ID number

END OF ONE YEAR WARRANTY:_____

SUBJECT: _____

[ ] If checked, the damage requires immediate attention. The CONTRACTOR has been called.
[ ] If checked, the Consultant has been asked to consult with the CONTRACTOR on the problem.

PLEASE CORRECT OR REPAIR THE FOLLOWING ITEM(S):

DATE OF REQUEST_____ **SIGNATURE** _____
Project Manager

xc:
[ ]_____Phone No._____ [
]_____Phone No. _____ [
]_____Phone No._____ [
]_____Phone No._____

RESPONSE FROM CONTRACTOR: DATE CORRECTION WAS MADE:_____

The CONTRACTOR must endeavor to correct the defect within 7 calendar days after written notice is given. If the defect cannot be corrected in that time, CONTRACTOR shall provide a written explanation to the OWNER's Representative describing the repairs needed and the time required to complete the repairs.

Description of corrections made:

DATE OF REPLY_____SIGNATURE_____

When the repair is complete, the CONTRACTOR should return a copy to each of the following:

[ ]_____Phone No._____ [
]_____Phone No. _____ [
]_____Phone No._____ [
]_____Phone No._____

Federal-aid assurances and contract provisions

NOTE: All documents referenced in Section 00810A are to be completed, signed and submitted with the bid.

CERTIFICATION OF INTEREST IN OTHER BID PROPOSALS FOR THIS WORK

By signing this proposal, the bidding firm and the signer certify that the following information, as indicated by checking "Yes" or "No", below, is true, accurate, and complete.

A. Quotation(s) have been issued in this firm's name to other firm(s) interested in this work for consideration for performing a portion of this work.

_____ YES

_____ NO

B. If this proposal is the low bid, the bidder agrees to provide the following information prior to award of the contract.

1. Identify firms which bid as a prime contractor and from which the bidder received quotations for work on this project.

2. Identify all the firms which bid as a prime contractor to which the bidder gave quotations for work on this project.

DISCLOSURE OF LOBBYING ACTIVITIES

Complete this form to disclose lobbying activities pursuant to 31 U.S.C. 1352 (See reverse for public burden disclosure.)

1. Type of Federal Action: a. contract b. grant c. cooperative agreement d. loan e. loan guarantee f. loan insurance	2. Status of Federal Action: a. bid/offer/application b. initial award c. post-award	3. Report Type: a. initial filing b. grant For Material Change Only: year _____ quarter _____ date of last report _____
4. **Name and Address of Reporting Entity:** ☐ Prime ☐ Subawardee Tier _____, if known: **Congressional District**, if known:	5. **If Reporting Entity in No. 4 is Subawardee,** Enter Name and Address of Prime: **Congressional District**, if known:	
6. **Federal Department/Agency:**	7. **Federal Program Name/Description:** CFDA Number, if applicable: _____	
8. **Federal Action Number**, if known:	9. **Award Amount,** if known: $ _____	
10. a. Name and Address of Lobbying Entity (if individual, last name, first name, MI): (attach Continuation Sheet(s) SF-LLL-A, if necessary)	b. Individuals Performing Services (including address if different from No. 10a) (last name, first name, MI):	
11. Amount of Payment (check all that apply): $ _____ actual planned 12. Form of Payment (check all that apply) a. cash b. in-kind: specify: nature _____ value _____	13. Type of Payment (check all that apply): a. retainer b. one-time fee c. commission d. contingent fee e. deferred f. other; specify: _____	
14. Brief Description of Services Performed or to be Performed and Date(s) of Service, including officer(s), employee(s), or Member(s) contacted, for Payment Indicated in Item 11: (attach Continuation Sheet(s) SF-LLL-A, if necessary)		
15. **Continuation Sheet(s) SF-LLL-A attached:** ☐ Yes ☐ No		
16. Information requested through this form is authorized by title 31 U.S.C. section 1352. This disclosure of lobbying activities s a material representation of fact upon which reliance wasplaced by the tier above when thi transaction was made or entered into. This disclosure is required pursuant to 31 U.S.C. 1352. This information will be reported to the Congress semi-annually and will be available for public inspection. Any person who fails to file the required disclosure shall be subject to a civil penalty of not less than $10,000 and not more than $100,000 for each such failure.	Signature: _____ Print Name: _____ Title: _____ Telephone No: _____ Date: _____	
FEDERAL USE ONLY		Authorized for Local Reproduction Standard Form - LLL

INSTRUCTIONS FOR COMPLETION OF SF-LLL, DISCLOSURE OF LOBBYING ACTIVITIES

This disclosure form shall be completed by the reporting entity, whether subawardee or prime Federal recipient, at the initiation or receipt of a covered Federal action, or a material change to a previous filing, pursuant to title 31 U.S.C section 1352. The filing of a form is required for each payment or agreement to make payment to any lobbying entity for influencing or attempting to influence an officer or employee of any agency, a Member of Congress, an officer or employee of Congress, or an employee of a Member of Congress in connection with a covered Federal action. Use the SF-LLL-A Continuation Sheet for additional information if the space on the form is inadequate. Complete all items that apply for both the initial filing and material change report. Refer to the implementing guidance published by the Office of Management and Budget for additional information.

1. Identify the type of covered Federal action for which lobbying activity is and/or has been secure to influence the outcome of a covered Federal action.
2. Identify the status of the covered Federal action.
3. Identify the appropriate classification of this report. If this is a follow-up report caused by a material change to the information previously reported, enter the year and quarter in which the change occurred. Enter the date of the last previously submitted report by this reporting entity or this covered Federal action.
4. Enter the full name, address, city, state and zip code of the reporting entity. Include Congressiona District, if known. Check the appropriate classification of the reporting entity that designates if it is, or expects to be, a prime or subaward recipient. Identify the tier of the subawardee, e.g., the first subawardee of the prime is the 1st tier. Subawards include but are not limited to subcontracts, subgrants and contract awards under grants.
5. If the organization filing the report in item 4 checks "Subawardee", then enter the full name, address, city, state and zip code of the prime Federal recipient. Include Congressional District, if known.
6. Enter the name of the Federal agency making the award or loan commitment. Include at least one organizational level below agency name, if known. For example, Department of Transportation, United States Coast Guard.
7. Enter the Federal program name or description for the covered Federal action (item 1). If known, enter the full Catalog of Federal Domestic Assistance (CFDA) number for grants, cooperative agreements, loans, and loan commitments.
8. Enter the most appropriate Federal identifying number available for the Federal action identified in item 1 (e.g., Request for Proposal (RFP) number; Invitation for Bid (IFB) number; grant announcement number, the contract, grant, or loan award number; the application/proposal control number assigned by the Federal agency). Include prefixes, e.g., "RFP-DE-90-001."
9. For a covered Federal action where there has been an award or loan commitment by the Federal agency, enter the Federal amount of the award/loan commitment for the prime entity identified in item 4 or 5.
10. (a) Enter the full name, address, city, state and zip code of the lobbying entity engaged by the reporting entity identified in item 4 to influence the covered Federal action.
    (b) Enter the full names of the individual(s) performing services, and include full address if different from 10(a). Enter Last Name, First Name, and Middle Initial (MI).
11. Enter the amount of compensation paid or reasonably expected to be paid by the reporting entity (item 4) to the lobbying entity (item 10). Indicate whether the payment has been made (actual) or will be made (planned). Check all boxes that apply. If this is a material change report, enter the cumulative amount of payment made or planned to be made.
12. Check the appropriate box(es). Check all boxes that apply. If payment is made through an in-kind contribution, specify the nature and value of the in-kind payment.
13. Check the appropriate box(es). Check all boxes that apply. If other, specify nature.
14. Provide a specific and detailed description of the services that the lobbyist has performed, or will be expected to perform, and the date(s) of any services rendered. Include all preparatory and related activity, not just time spent in actual contact with Federal officials. Identify the Federal official(s) or employee(s) contacted or the officer(s), employee(s), or Member(s) of Congress that were contacted.
15. Check whether or not a SF-LLL-A continuation Sheet(s) is attached.
16. The certifying official shall sign and date the form, print his/her name, title, and telephone number.

Public reporting burdon for this collection of infromation is estimated to average 30 minutes per response, including time for reviewing instructions, searching existing data sources, gathering and maintaining the data needed, and completing and reviewing the collection of information. Send comments reguarding the burden estimate or any other aspect of this collection of information, including suggestions for reducing this burdon, to the Office of Management and Budget, Paperwork Reduction Project (0348-0046), Washington, D.C. 20503.

DISCLOSURE OF LOBBYING ACTIVITIES

Approved by OMB
0348-0046

CONTINUATION SHEET

Reporting Entity: _____ Page _____ of _____

Authorized for Local Reproduction
Standard Form - LLL-A

CONTRACTORS ASSURANCE

(Subcontracts - Federal Aid Projects)

By signing this proposal the contractor is giving assurances that all subcontract agreements of $10,000 or more on this project will incorporate the following provisions:

Special Provision	"Certification of Nondiscrimination in Employment"
Special Provision	"Notice of Requirement for Affirmative Action to Ensure Equal Employment Opportunity (Executive Order 11246)"
Special Provision	"Standard Federal Equal Employment Opportunity Construction Contract Specifications (Executive Order 11246)"
Form FHWA 1273	"Required Contract Provisions Federal-aid Construction Contracts" (Form FHWA 1273 must also be physically attached to subcontracts and purchase orders of $10,000 or more)

Applicable "Wage Determination Decision"

CHILD SUPPORT STATEMENT FOR THE TEXAS DEPARTMENT OF TRANSPORTATION FOR NEGOTIATED CONTRACTS AND GRANTS

Under Family Code, Section 231.006, _____ *(name of individual)* certifies that _____ (*name of business*) _____ (*vendor #)* as of _____, 20___ (*date*) is eligible to receive a grant, loan, or payment and acknowledges that any contract may be terminated and payment may be withheld if this certification is inaccurate.

List below the name and social security number of the individual or sole proprietor and each partner, shareholder, or owner with an ownership interest of at least 25% of the business entity submitting the bid or application. This form must be updated whenever any party obtains a 25% ownership interest in the business entity.

Name (Please Print Legibly)	***Social Security Number***

Family Code, Section 231.006, specifies that a child support obligor who is more than thirty (30) days delinquent in paying child support and a business entity in which the obligor is a sole proprietor, partner, shareholder, or owner with an ownership interest of at least 25% percent is not eligible to receive payments from state funds under a contract to provide property, materials, or services; or receive a state-funded grant or loan.

A child support obligor or business entity ineligible to receive payments described above remains ineligible until all arrearage have been paid or the obligor is in compliance with a written repayment agreement or court order as to any existing delinquency.

Except as provided by Family Code, Section 231.302(d), a social security number is confidential and may be disclosed only for the purposes of responding to a request for information from an agency operating under the provisions of Subchapters A and D of Title IV of the federal Social Security Act (42 U.S.C. Sections 601 et seq. and 651 et seq.)

The Texas Department of Transportation maintains the information collected through this article. With few exceptions, you are entitled on request to be informed about the information that we collect about you. Under Sections 552.021 and 552.023 of the Texas Government Code, you also are entitled to receive and review the information. Under Section 559.004 of the Government Code, you are also entitled to have us correct information about you that is incorrect.

- Please send this form to Texas Department of Transportation, Office of General Counsel (OGC) - Contract Services Section, 125 E. 11th Street, Austin, Texas 78701-2483.

BUSINESS OWNERSHIP

Contract Number:

Firm/Company Name:

BUSINESS OWNERSHIP

Section 231.006, Family Code, requires the Department to collect the names and social security number of individuals owning 25% or more of the business entity awarded this contract.

1. In the spaces below please provide the names and social security number of individuals owning 25% or more of the business

NAME	SOCIAL SECURITY NUMBER
_____	_____
_____	_____
_____	_____
_____	_____

2. Please check the box below if no individual owns 25% or more of the business.

[ ] No individual owns 25% or more of the business.

Except as provided by Section 231.302(d), Family Code, a social security number is confidential and may be disclosed only for the purpose of responding to a request for information from an agency operating under the provisions of Parts A and D to Title IV of the federal Social Security Act (42 USC Section 601-617 and 651-699).

Under section 231.006, Family Code, the Vendor or applicant certifies that the individual or business entity named in this contract, bid, or application is eligible to receive the specified grant, loan, or payment and acknowledges that this contract may be terminated and payment may be withheld if this certification is inaccurate.

The information must be provided and returned with the executed contract documents. Failure to furnish this information will result in the contract being declared in default and forfeiture of the proposal guaranty.

_____ _____
Signature Date

_____
Print Name

If this project is a Joint Venture, all parties to the joint venture must provide a completed form.

Non-Collusion Affidavit

The undersigned, as bidder, declares that the only person or parties interested in this proposal as principals are those named herein; that the Contractor has not, either directly or indirectly, entered into any agreement, participated in any collusion, or otherwise taken any action in restraint of free competitive bidding in connection with the contract for the above-captioned highway work.

The undersigned affirms the truth and accuracy of this certification.

_____
Legal Firm Name

_____
Signature

Address: _____

_____

_____

Before me, the undersigned authority a Notary Public on this day personally appeared

_____who, being by me duly sworn, upon oath says that he/she is qualified and authorized to make this affidavit for and on behalf of

_____County(s), Texas, and is fully cognizant of the facts herein set out and affirms to the truth and accuracy of the certification made herein by signing above.

Subscribed and sworn to before me by the said (1)_____

this _____ day of _____,20___, to certify which witness my hand and seal of office.

_____
Notary Public in and for

_____County, Texas

BUY AMERICA

By signing this proposal, the bidding firm and the signer certify that they will comply with the latest provisions of Buy America as listed at 23 CFR 635.410. Use steel or iron materials manufactured in the United States except when:

- The cost of materials, including delivery, does not exceed 0.1% of the total Contract cost or $2,500, whichever is greater;
- The Contract contains an alternate Item for a foreign source steel or iron product and the Contract is awarded based on the alternate Item; or
- The materials are temporarily installed.

Provide a notarized original of the FORM D-9-USA-1 with the proper attachments for verification of compliance.

Manufacturing is any process that modifies the chemical content, physical shape or size, or final finish of a product. Manufacturing begins with initial melting and mixing and continues through fabrication (cutting, drilling, welding, bending, etc.) and coating (paint, galvanizing, epoxy, etc.).

FHWA-1273 -- Revised May 1, 2012

REQUIRED CONTRACT PROVISIONS
FEDERAL-AID CONSTRUCTION CONTRACTS

I. General
II. Nondiscrimination
III. Nonsegregated Facilities
IV. Davis-Bacon and Related Act Provisions
V. Contract Work Hours and Safety Standards Act Provisions
VI. Subletting or Assigning the Contract
VII. Safety: Accident Prevention
VIII. False Statements Concerning Highway Projects
IX. Implementation of Clean Air Act and Federal Water Pollution Control Act
X. Compliance with Governmentwide Suspension and Debarment Requirements
XI. Certification Regarding Use of Contract Funds for Lobbying

ATTACHMENTS

A. Employment and Materials Preference for Appalachian Development Highway System or Appalachian Local Access Road Contracts (included in Appalachian contracts only)

I. GENERAL

1. Form FHWA-1273 must be physically incorporated in each construction contract funded under Title 23 (excluding emergency contracts solely intended for debris removal). The contractor (or subcontractor) must insert this form in each subcontract and further require its inclusion in all lower tier subcontracts (excluding purchase orders, rental agreements and other agreements for supplies or services).

The applicable requirements of Form FHWA-1273 are incorporated by reference for work done under any purchase order, rental agreement or agreement for other services. The prime contractor shall be responsible for compliance by any subcontractor, lower-tier subcontractor or service provider.

Form FHWA-1273 must be included in all Federal-aid design-build contracts, in all subcontracts and in lower tier subcontracts (excluding subcontracts for design services, purchase orders, rental agreements and other agreements for supplies or services). The design-builder shall be responsible for compliance by any subcontractor, lower-tier subcontractor or service provider.

Contracting agencies may reference Form FHWA-1273 in bid proposal or request for proposal documents, however, the Form FHWA-1273 must be physically incorporated (not referenced) in all contracts, subcontracts and lower-tier subcontracts (excluding purchase orders, rental agreements and other agreements for supplies or services related to a construction contract).

2. Subject to the applicability criteria noted in the following sections, these contract provisions shall apply to all work performed on the contract by the contractor's own organization and with the assistance of workers under the contractor's immediate superintendence and to all work performed on the contract by piecework, station work, or by subcontract.

3. A breach of any of the stipulations contained in these Required Contract Provisions may be sufficient grounds for withholding of progress payments, withholding of final payment, termination of the contract, suspension / debarment or any other action determined to be appropriate by the contracting agency and FHWA.

4. Selection of Labor: During the performance of this contract, the contractor shall not use convict labor for any purpose within the limits of a construction project on a Federal-aid highway unless it is labor performed by convicts who are on parole, supervised release, or probation. The term Federal-aid highway does not include roadways functionally classified as local roads or rural minor collectors.

II. NONDISCRIMINATION

The provisions of this section related to 23 CFR Part 230 are applicable to all Federal-aid construction contracts and to all related construction subcontracts of $10,000 or more. The provisions of 23 CFR Part 230 are not applicable to material supply, engineering, or architectural service contracts.

In addition, the contractor and all subcontractors must comply with the following policies: Executive Order 11246, 41 CFR 60, 29 CFR 1625-1627, Title 23 USC Section 140, the Rehabilitation Act of 1973, as amended (29 USC 794), Title VI of the Civil Rights Act of 1964, as amended, and related regulations including 49 CFR Parts 21, 26 and 27; and 23 CFR Parts 200, 230, and 633.

The contractor and all subcontractors must comply with: the requirements of the Equal Opportunity Clause in 41 CFR 60-1.4(b) and, for all construction contracts exceeding $10,000, the Standard Federal Equal Employment Opportunity Construction Contract Specifications in 41 CFR 60-4.3.

Note: The U.S. Department of Labor has exclusive authority to determine compliance with Executive Order 11246 and the policies of the Secretary of Labor including 41 CFR 60, and 29 CFR 1625-1627. The contracting agency and the FHWA have the authority and the responsibility to ensure compliance with Title 23 USC Section 140, the Rehabilitation Act of 1973, as amended (29 USC 794), and Title VI of the Civil Rights Act of 1964, as amended, and related regulations including 49 CFR Parts 21, 26 and 27; and 23 CFR Parts 200, 230, and 633.

The following provision is adopted from 23 CFR 230, Appendix A, with appropriate revisions to conform to the U.S. Department of Labor (US DOL) and FHWA requirements.

1. Equal Employment Opportunity: Equal employment opportunity (EEO) requirements not to discriminate and to take affirmative action to assure equal opportunity as set forth under laws, executive orders, rules, regulations (28 CFR 35, 29 CFR 1630, 29 CFR 1625-1627, 41 CFR 60 and 49 CFR 27) and orders of the Secretary of Labor as modified by the provisions prescribed herein, and imposed pursuant to 23 U.S.C. 140 shall constitute the EEO and specific affirmative action standards for the contractor's project activities under

this contract. The provisions of the Americans with Disabilities Act of 1990 (42 U.S.C. 12101 et seq.) set forth under 28 CFR 35 and 29 CFR 1630 are incorporated by reference in this contract. In the execution of this contract, the contractor agrees to comply with the following minimum specific requirement activities of EEO:

a. The contractor will work with the contracting agency and the Federal Government to ensure that it has made every good faith effort to provide equal opportunity with respect to all of its terms and conditions of employment and in their review of activities under the contract.

b. The contractor will accept as its operating policy the following statement:

"It is the policy of this Company to assure that applicants are employed, and that employees are treated during employment, without regard to their race, religion, sex, color, national origin, age or disability. Such action shall include: employment, upgrading, demotion, or transfer; recruitment or recruitment advertising; layoff or termination; rates of pay or other forms of compensation; and selection for training, including apprenticeship, pre-apprenticeship, and/or on-the-job training."

2. EEO Officer: The contractor will designate and make known to the contracting officers an EEO Officer who will have the responsibility for and must be capable of effectively administering and promoting an active EEO program and who must be assigned adequate authority and responsibility to do so.

3. Dissemination of Policy: All members of the contractor's staff who are authorized to hire, supervise, promote, and discharge employees, or who recommend such action, or who are substantially involved in such action, will be made fully cognizant of, and will implement, the contractor's EEO policy and contractual responsibilities to provide EEO in each grade and classification of employment. To ensure that the above agreement will be met, the following actions will be taken as a minimum:

a. Periodic meetings of supervisory and personnel office employees will be conducted before the start of work and then not less often than once every six months, at which time the contractor's EEO policy and its implementation will be reviewed and explained. The meetings will be conducted by the EEO Officer.

b. All new supervisory or personnel office employees will be given a thorough indoctrination by the EEO Officer, covering all major aspects of the contractor's EEO obligations within thirty days following their reporting for duty with the contractor.

c. All personnel who are engaged in direct recruitment for the project will be instructed by the EEO Officer in the contractor's procedures for locating and hiring minorities and women.

d. Notices and posters setting forth the contractor's EEO policy will be placed in areas readily accessible to employees, applicants for employment and potential employees.

e. The contractor's EEO policy and the procedures to implement such policy will be brought to the attention of employees by means of meetings, employee handbooks, or other appropriate means.

4. Recruitment: When advertising for employees, the contractor will include in all advertisements for employees the notation: "An Equal Opportunity Employer." All such advertisements will be placed in publications having a large circulation among minorities and women in the area from which the project work force would normally be derived.

a. The contractor will, unless precluded by a valid bargaining agreement, conduct systematic and direct recruitment through public and private employee referral sources likely to yield qualified minorities and women. To meet this requirement, the contractor will identify sources of potential minority group employees, and establish with such identified sources procedures whereby minority and women applicants may be referred to the contractor for employment consideration.

b. In the event the contractor has a valid bargaining agreement providing for exclusive hiring hall referrals, the contractor is expected to observe the provisions of that agreement to the extent that the system meets the contractor's compliance with EEO contract provisions. Where implementation of such an agreement has the effect of discriminating against minorities or women, or obligates the contractor to do the same, such implementation violates Federal nondiscrimination provisions.

c. The contractor will encourage its present employees to refer minorities and women as applicants for employment. Information and procedures with regard to referring such applicants will be discussed with employees.

5. Personnel Actions: Wages, working conditions, and employee benefits shall be established and administered, and personnel actions of every type, including hiring, upgrading, promotion, transfer, demotion, layoff, and termination, shall be taken without regard to race, color, religion, sex, national origin, age or disability. The following procedures shall be followed:

a. The contractor will conduct periodic inspections of project sites to insure that working conditions and employee facilities do not indicate discriminatory treatment of project site personnel.

b. The contractor will periodically evaluate the spread of wages paid within each classification to determine any evidence of discriminatory wage practices.

c. The contractor will periodically review selected personnel actions in depth to determine whether there is evidence of discrimination. Where evidence is found, the contractor will promptly take corrective action. If the review indicates that the discrimination may extend beyond the actions reviewed, such corrective action shall include all affected persons.

d. The contractor will promptly investigate all complaints of alleged discrimination made to the contractor in connection with its obligations under this contract, will attempt to resolve such complaints, and will take appropriate corrective action within a reasonable time. If the investigation indicates that the discrimination may affect persons other than the complainant, such corrective action shall include such other persons. Upon completion of each investigation, the contractor will inform every complainant of all of their avenues of appeal.

6. Training and Promotion:

a. The contractor will assist in locating, qualifying, and increasing the skills of minorities and women who are

applicants for employment or current employees. Such efforts should be aimed at developing full journey level status employees in the type of trade or job classification involved.

b. Consistent with the contractor's work force requirements and as permissible under Federal and State regulations, the contractor shall make full use of training programs, i.e., apprenticeship, and on-the-job training programs for the geographical area of contract performance. In the event a special provision for training is provided under this contract, this subparagraph will be superseded as indicated in the special provision. The contracting agency may reserve training positions for persons who receive welfare assistance in accordance with 23 U.S.C. 140(a).

c. The contractor will advise employees and applicants for employment of available training programs and entrance requirements for each.

d. The contractor will periodically review the training and promotion potential of employees who are minorities and women and will encourage eligible employees to apply for such training and promotion.

7. Unions: If the contractor relies in whole or in part upon unions as a source of employees, the contractor will use good faith efforts to obtain the cooperation of such unions to increase opportunities for minorities and women. Actions by the contractor, either directly or through a contractor's association acting as agent, will include the procedures set forth below:

a. The contractor will use good faith efforts to develop, in cooperation with the unions, joint training programs aimed toward qualifying more minorities and women for membership in the unions and increasing the skills of minorities and women so that they may qualify for higher paying employment.

b. The contractor will use good faith efforts to incorporate an EEO clause into each union agreement to the end that such union will be contractually bound to refer applicants without regard to their race, color, religion, sex, national origin, age or disability.

c. The contractor is to obtain information as to the referral practices and policies of the labor union except that to the extent such information is within the exclusive possession of the labor union and such labor union refuses to furnish such information to the contractor, the contractor shall so certify to the contracting agency and shall set forth what efforts have been made to obtain such information.

d. In the event the union is unable to provide the contractor with a reasonable flow of referrals within the time limit set forth in the collective bargaining agreement, the contractor will, through independent recruitment efforts, fill the employment vacancies without regard to race, color, religion, sex, national origin, age or disability; making full efforts to obtain qualified and/or qualifiable minorities and women. The failure of a union to provide sufficient referrals (even though it is obligated to provide exclusive referrals under the terms of a collective bargaining agreement) does not relieve the contractor from the requirements of this paragraph. In the event the union referral practice prevents the contractor from meeting the obligations pursuant to Executive Order 11246, as amended, and these special provisions, such contractor shall immediately notify the contracting agency.

8. Reasonable Accommodation for Applicants / Employees with Disabilities: The contractor must be familiar with the requirements for and comply with the Americans with Disabilities Act and all rules and regulations established there under. Employers must provide reasonable accommodation in all employment activities unless to do so would cause an undue hardship.

9. Selection of Subcontractors, Procurement of Materials and Leasing of Equipment: The contractor shall not discriminate on the grounds of race, color, religion, sex, national origin, age or disability in the selection and retention of subcontractors, including procurement of materials and leases of equipment. The contractor shall take all necessary and reasonable steps to ensure nondiscrimination in the administration of this contract.

a. The contractor shall notify all potential subcontractors and suppliers and lessors of their EEO obligations under this contract.

b. The contractor will use good faith efforts to ensure subcontractor compliance with their EEO obligations.

10. Assurance Required by 49 CFR 26.13(b):

a. The requirements of 49 CFR Part 26 and the State DOT's U.S. DOT-approved DBE program are incorporated by reference.

b. The contractor or subcontractor shall not discriminate on the basis of race, color, national origin, or sex in the performance of this contract. The contractor shall carry out applicable requirements of 49 CFR Part 26 in the award and administration of DOT-assisted contracts. Failure by the contractor to carry out these requirements is a material breach of this contract, which may result in the termination of this contract or such other remedy as the contracting agency deems appropriate.

11. Records and Reports: The contractor shall keep such records as necessary to document compliance with the EEO requirements. Such records shall be retained for a period of three years following the date of the final payment to the contractor for all contract work and shall be available at reasonable times and places for inspection by authorized representatives of the contracting agency and the FHWA.

a. The records kept by the contractor shall document the following:

(1) The number and work hours of minority and non-minority group members and women employed in each work classification on the project;

(2) The progress and efforts being made in cooperation with unions, when applicable, to increase employment opportunities for minorities and women; and

(3) The progress and efforts being made in locating, hiring, training, qualifying, and upgrading minorities and women;

b. The contractors and subcontractors will submit an annual report to the contracting agency each July for the duration of the project, indicating the number of minority, women, and non-minority group employees currently engaged in each work classification required by the contract work. This information is to be reported on Form FHWA-1391. The staffing data should represent the project work force on board in all or any part of the last payroll period preceding the end of July. If on-the-job training is being required by special provision, the contractor

will be required to collect and report training data. The employment data should reflect the work force on board during all or any part of the last payroll period preceding the end of July.

III. NONSEGREGATED FACILITIES

This provision is applicable to all Federal-aid construction contracts and to all related construction subcontracts of $10,000 or more.

The contractor must ensure that facilities provided for employees are provided in such a manner that segregation on the basis of race, color, religion, sex, or national origin cannot result. The contractor may neither require such segregated use by written or oral policies nor tolerate such use by employee custom. The contractor's obligation extends further to ensure that its employees are not assigned to perform their services at any location, under the contractor's control, where the facilities are segregated. The term "facilities" includes waiting rooms, work areas, restaurants and other eating areas, time clocks, restrooms, washrooms, locker rooms, and other storage or dressing areas, parking lots, drinking fountains, recreation or entertainment areas, transportation, and housing provided for employees. The contractor shall provide separate or single-user restrooms and necessary dressing or sleeping areas to assure privacy between sexes.

IV. DAVIS-BACON AND RELATED ACT PROVISIONS

This section is applicable to all Federal-aid construction projects exceeding $2,000 and to all related subcontracts and lower-tier subcontracts (regardless of subcontract size). The requirements apply to all projects located within the right-of-way of a roadway that is functionally classified as Federal-aid highway. This excludes roadways functionally classified as local roads or rural minor collectors, which are exempt. Contracting agencies may elect to apply these requirements to other projects.

The following provisions are from the U.S. Department of Labor regulations in 29 CFR 5.5 "Contract provisions and related matters" with minor revisions to conform to the FHWA-1273 format and FHWA program requirements.

1. Minimum wages

a. All laborers and mechanics employed or working upon the site of the work, will be paid unconditionally and not less often than once a week, and without subsequent deduction or rebate on any account (except such payroll deductions as are permitted by regulations issued by the Secretary of Labor under the Copeland Act (29 CFR part 3)), the full amount of wages and bona fide fringe benefits (or cash equivalents thereof) due at time of payment computed at rates not less than those contained in the wage determination of the Secretary of Labor which is attached hereto and made a part hereof, regardless of any contractual relationship which may be alleged to exist between the contractor and such laborers and mechanics.

Contributions made or costs reasonably anticipated for bona fide fringe benefits under section 1(b)(2) of the Davis-Bacon Act on behalf of laborers or mechanics are considered wages paid to such laborers or mechanics, subject to the provisions of paragraph 1.d. of this section; also, regular contributions made or costs incurred for more than a weekly period (but not less often than quarterly) under plans, funds, or programs which cover the particular weekly period, are deemed to be constructively made or incurred during such weekly period. Such laborers and mechanics shall be paid the appropriate wage rate and fringe benefits on the wage determination for the classification of work actually performed, without regard to skill, except as provided in 29 CFR 5.5(a)(4). Laborers or mechanics performing work in more than one classification may be compensated at the rate specified for each classification for the time actually worked therein: Provided, That the employer's payroll records accurately set forth the time spent in each classification in which work is performed. The wage determination (including any additional classification and wage rates conformed under paragraph 1.b. of this section) and the Davis-Bacon poster (WH–1321) shall be posted at all times by the contractor and its subcontractors at the site of the work in a prominent and accessible place where it can be easily seen by the workers.

b.(1) The contracting officer shall require that any class of laborers or mechanics, including helpers, which is not listed in the wage determination and which is to be employed under the contract shall be classified in conformance with the wage determination. The contracting officer shall approve an additional classification and wage rate and fringe benefits therefore only when the following criteria have been met:

(i) The work to be performed by the classification requested is not performed by a classification in the wage determination; and

(ii) The classification is utilized in the area by the construction industry; and

(iii) The proposed wage rate, including any bona fide fringe benefits, bears a reasonable relationship to the wage rates contained in the wage determination.

(2) If the contractor and the laborers and mechanics to be employed in the classification (if known), or their representatives, and the contracting officer agree on the classification and wage rate (including the amount designated for fringe benefits where appropriate), a report of the action taken shall be sent by the contracting officer to the Administrator of the Wage and Hour Division, Employment Standards Administration, U.S. Department of Labor, Washington, DC 20210. The Administrator, or an authorized representative, will approve, modify, or disapprove every additional classification action within 30 days of receipt and so advise the contracting officer or will notify the contracting officer within the 30-day period that additional time is necessary.

(3) In the event the contractor, the laborers or mechanics to be employed in the classification or their representatives, and the contracting officer do not agree on the proposed classification and wage rate (including the amount designated for fringe benefits, where appropriate), the contracting officer shall refer the questions, including the views of all interested parties and the recommendation of the contracting officer, to the Wage and Hour Administrator for determination. The Wage and Hour Administrator, or an authorized representative, will issue a determination within 30 days of receipt and so advise the contracting officer or

will notify the contracting officer within the 30-day period that additional time is necessary.

(4) The wage rate (including fringe benefits where appropriate) determined pursuant to paragraphs 1.b.(2) or 1.b.(3) of this section, shall be paid to all workers performing work in the classification under this contract from the first day on which work is performed in the classification.

c. Whenever the minimum wage rate prescribed in the contract for a class of laborers or mechanics includes a fringe benefit which is not expressed as an hourly rate, the contractor shall either pay the benefit as stated in the wage determination or shall pay another bona fide fringe benefit or an hourly cash equivalent thereof.

d. If the contractor does not make payments to a trustee or other third person, the contractor may consider as part of the wages of any laborer or mechanic the amount of any costs reasonably anticipated in providing bona fide fringe benefits under a plan or program, Provided, That the Secretary of Labor has found, upon the written request of the contractor, that the applicable standards of the Davis-Bacon Act have been met. The Secretary of Labor may require the contractor to set aside in a separate account assets for the meeting of obligations under the plan or program.

2. Withholding

The contracting agency shall upon its own action or upon written request of an authorized representative of the Department of Labor, withhold or cause to be withheld from the contractor under this contract, or any other Federal contract with the same prime contractor, or any other federally-assisted contract subject to Davis-Bacon prevailing wage requirements, which is held by the same prime contractor, so much of the accrued payments or advances as may be considered necessary to pay laborers and mechanics, including apprentices, trainees, and helpers, employed by the contractor or any subcontractor the full amount of wages required by the contract. In the event of failure to pay any laborer or mechanic, including any apprentice, trainee, or helper, employed or working on the site of the work, all or part of the wages required by the contract, the contracting agency may, after written notice to the contractor, take such action as may be necessary to cause the suspension of any further payment, advance, or guarantee of funds until such violations have ceased.

3. Payrolls and basic records

a. Payrolls and basic records relating thereto shall be maintained by the contractor during the course of the work and preserved for a period of three years thereafter for all laborers and mechanics working at the site of the work. Such records shall contain the name, address, and social security number of each such worker, his or her correct classification, hourly rates of wages paid (including rates of contributions or costs anticipated for bona fide fringe benefits or cash equivalents thereof of the types described in section 1(b)(2)(B) of the Davis-Bacon Act), daily and weekly number of hours worked, deductions made and actual wages paid. Whenever the Secretary of Labor has found under 29 CFR 5.5(a)(1)(iv) that the wages of any laborer or mechanic include the amount of any costs reasonably anticipated in providing benefits under a plan or program described in section 1(b)(2)(B) of the Davis-Bacon Act, the contractor shall maintain records which show that the commitment to provide such benefits is enforceable, that the plan or program is financially responsible, and that the plan or program has been communicated in writing to the laborers or mechanics affected, and records which show the costs anticipated or the actual cost incurred in providing such benefits. Contractors employing apprentices or trainees under approved programs shall maintain written evidence of the registration of apprenticeship programs and certification of trainee programs, the registration of the apprentices and trainees, and the ratios and wage rates prescribed in the applicable programs.

b.(1) The contractor shall submit weekly for each week in which any contract work is performed a copy of all payrolls to the contracting agency. The payrolls submitted shall set out accurately and completely all of the information required to be maintained under 29 CFR 5.5(a)(3)(i), except that full social security numbers and home addresses shall not be included on weekly transmittals. Instead the payrolls shall only need to include an individually identifying number for each employee (e.g. , the last four digits of the employee's social security number). The required weekly payroll information may be submitted in any form desired. Optional Form WH–347 is available for this purpose from the Wage and Hour Division Web site at http://www.dol.gov/esa/whd/forms/wh347instr.htm or its successor site. The prime contractor is responsible for the submission of copies of payrolls by all subcontractors. Contractors and subcontractors shall maintain the full social security number and current address of each covered worker, and shall provide them upon request to the contracting agency for transmission to the State DOT, the FHWA or the Wage and Hour Division of the Department of Labor for purposes of an investigation or audit of compliance with prevailing wage requirements. It is not a violation of this section for a prime contractor to require a subcontractor to provide addresses and social security numbers to the prime contractor for its own records, without weekly submission to the contracting agency..

(2) Each payroll submitted shall be accompanied by a "Statement of Compliance," signed by the contractor or subcontractor or his or her agent who pays or supervises the payment of the persons employed under the contract and shall certify the following:

(i) That the payroll for the payroll period contains the information required to be provided under §5.5 (a)(3)(ii) of Regulations, 29 CFR part 5, the appropriate information is being maintained under §5.5 (a)(3)(i) of Regulations, 29 CFR part 5, and that such information is correct and complete;

(ii) That each laborer or mechanic (including each helper, apprentice, and trainee) employed on the contract during the payroll period has been paid the full weekly wages earned, without rebate, either directly or indirectly, and that no deductions have been made either directly or indirectly from the full wages earned, other than permissible deductions as set forth in Regulations, 29 CFR part 3;

(iii) That each laborer or mechanic has been paid not less than the applicable wage rates and fringe benefits or cash equivalents for the classification of work performed, as specified in the applicable wage determination incorporated into the contract.

(3) The weekly submission of a properly executed certification set forth on the reverse side of Optional Form WH–347 shall satisfy the requirement for submission of the "Statement of Compliance" required by paragraph 3.b.(2) of this section.

(4) The falsification of any of the above certifications may subject the contractor or subcontractor to civil or criminal prosecution under section 1001 of title 18 and section 231 of title 31 of the United States Code.

c. The contractor or subcontractor shall make the records required under paragraph 3.a. of this section available for inspection, copying, or transcription by authorized representatives of the contracting agency, the State DOT, the FHWA, or the Department of Labor, and shall permit such representatives to interview employees during working hours on the job. If the contractor or subcontractor fails to submit the required records or to make them available, the FHWA may, after written notice to the contractor, the contracting agency or the State DOT, take such action as may be necessary to cause the suspension of any further payment, advance, or guarantee of funds. Furthermore, failure to submit the required records upon request or to make such records available may be grounds for debarment action pursuant to 29 CFR 5.12.

4. Apprentices and trainees

a. Apprentices (programs of the USDOL).

Apprentices will be permitted to work at less than the predetermined rate for the work they performed when they are employed pursuant to and individually registered in a bona fide apprenticeship program registered with the U.S. Department of Labor, Employment and Training Administration, Office of Apprenticeship Training, Employer and Labor Services, or with a State Apprenticeship Agency recognized by the Office, or if a person is employed in his or her first 90 days of probationary employment as an apprentice in such an apprenticeship program, who is not individually registered in the program, but who has been certified by the Office of Apprenticeship Training, Employer and Labor Services or a State Apprenticeship Agency (where appropriate) to be eligible for probationary employment as an apprentice.

The allowable ratio of apprentices to journeymen on the job site in any craft classification shall not be greater than the ratio permitted to the contractor as to the entire work force under the registered program. Any worker listed on a payroll at an apprentice wage rate, who is not registered or otherwise employed as stated above, shall be paid not less than the applicable wage rate on the wage determination for the classification of work actually performed. In addition, any apprentice performing work on the job site in excess of the ratio permitted under the registered program shall be paid not less than the applicable wage rate on the wage determination for the work actually performed. Where a contractor is performing construction on a project in a locality other than that in which its program is registered, the ratios and wage rates (expressed in percentages of the journeyman's hourly rate) specified in the contractor's or subcontractor's registered program shall be observed.

Every apprentice must be paid at not less than the rate specified in the registered program for the apprentice's level of progress, expressed as a percentage of the journeymen hourly rate specified in the applicable wage determination. Apprentices shall be paid fringe benefits in accordance with the provisions of the apprenticeship program. If the apprenticeship program does not specify fringe benefits, apprentices must be paid the full amount of fringe benefits listed on the wage determination for the applicable classification. If the Administrator determines that a different practice prevails for the applicable apprentice classification, fringes shall be paid in accordance with that determination.

In the event the Office of Apprenticeship Training, Employer and Labor Services, or a State Apprenticeship Agency recognized by the Office, withdraws approval of an apprenticeship program, the contractor will no longer be permitted to utilize apprentices at less than the applicable predetermined rate for the work performed until an acceptable program is approved.

b. Trainees (programs of the USDOL).

Except as provided in 29 CFR 5.16, trainees will not be permitted to work at less than the predetermined rate for the work performed unless they are employed pursuant to and individually registered in a program which has received prior approval, evidenced by formal certification by the U.S. Department of Labor, Employment and Training Administration.

The ratio of trainees to journeymen on the job site shall not be greater than permitted under the plan approved by the Employment and Training Administration.

Every trainee must be paid at not less than the rate specified in the approved program for the trainee's level of progress, expressed as a percentage of the journeyman hourly rate specified in the applicable wage determination. Trainees shall be paid fringe benefits in accordance with the provisions of the trainee program. If the trainee program does not mention fringe benefits, trainees shall be paid the full amount of fringe benefits listed on the wage determination unless the Administrator of the Wage and Hour Division determines that there is an apprenticeship program associated with the corresponding journeyman wage rate on the wage determination which provides for less than full fringe benefits for apprentices. Any employee listed on the payroll at a trainee rate who is not registered and participating in a training plan approved by the Employment and Training Administration shall be paid not less than the applicable wage rate on the wage determination for the classification of work actually performed. In addition, any trainee performing work on the job site in excess of the ratio permitted under the registered program shall be paid not less than the applicable wage rate on the wage determination for the work actually performed.

In the event the Employment and Training Administration withdraws approval of a training program, the contractor will no longer be permitted to utilize trainees at less than the applicable predetermined rate for the work performed until an acceptable program is approved.

c. Equal employment opportunity. The utilization of apprentices, trainees and journeymen under this part shall be in conformity with the equal employment opportunity requirements of Executive Order 11246, as amended, and 29 CFR part 30.

d. Apprentices and Trainees (programs of the U.S. DOT).

Apprentices and trainees working under apprenticeship and skill training programs which have been certified by the Secretary of Transportation as promoting EEO in connection with Federal-aid highway construction programs are not subject to the requirements of paragraph 4 of this Section IV. The straight time hourly wage rates for apprentices and trainees under such programs will be established by the particular programs. The ratio of apprentices and trainees to journeymen shall not be greater than permitted by the terms of the particular program.

5. Compliance with Copeland Act requirements. The contractor shall comply with the requirements of 29 CFR part 3, which are incorporated by reference in this contract.

6. Subcontracts. The contractor or subcontractor shall insert Form FHWA-1273 in any subcontracts and also require the subcontractors to include Form FHWA-1273 in any lower tier subcontracts. The prime contractor shall be responsible for the compliance by any subcontractor or lower tier subcontractor with all the contract clauses in 29 CFR 5.5.

7. Contract termination: debarment. A breach of the contract clauses in 29 CFR 5.5 may be grounds for termination of the contract, and for debarment as a contractor and a subcontractor as provided in 29 CFR 5.12.

8. Compliance with Davis-Bacon and Related Act requirements. All rulings and interpretations of the Davis-Bacon and Related Acts contained in 29 CFR parts 1, 3, and 5 are herein incorporated by reference in this contract.

9. Disputes concerning labor standards. Disputes arising out of the labor standards provisions of this contract shall not be subject to the general disputes clause of this contract. Such disputes shall be resolved in accordance with the procedures of the Department of Labor set forth in 29 CFR parts 5, 6, and 7. Disputes within the meaning of this clause include disputes between the contractor (or any of its subcontractors) and the contracting agency, the U.S. Department of Labor, or the employees or their representatives.

10. Certification of eligibility.

a. By entering into this contract, the contractor certifies that neither it (nor he or she) nor any person or firm who has an interest in the contractor's firm is a person or firm ineligible to be awarded Government contracts by virtue of section 3(a) of the Davis-Bacon Act or 29 CFR 5.12(a)(1).

b. No part of this contract shall be subcontracted to any person or firm ineligible for award of a Government contract by virtue of section 3(a) of the Davis-Bacon Act or 29 CFR 5.12(a)(1).

c. The penalty for making false statements is prescribed in the U.S. Criminal Code, 18 U.S.C. 1001.

V. CONTRACT WORK HOURS AND SAFETY STANDARDS ACT

The following clauses apply to any Federal-aid construction contract in an amount in excess of $100,000 and subject to the overtime provisions of the Contract Work Hours and Safety Standards Act. These clauses shall be inserted in addition to the clauses required by 29 CFR 5.5(a) or 29 CFR 4.6. As used in this paragraph, the terms laborers and mechanics include watchmen and guards.

1. Overtime requirements. No contractor or subcontractor contracting for any part of the contract work which may require or involve the employment of laborers or mechanics shall require or permit any such laborer or mechanic in any workweek in which he or she is employed on such work to work in excess of forty hours in such workweek unless such laborer or mechanic receives compensation at a rate not less than one and one-half times the basic rate of pay for all hours worked in excess of forty hours in such workweek.

2. Violation; liability for unpaid wages; liquidated damages. In the event of any violation of the clause set forth in paragraph (1.) of this section, the contractor and any subcontractor responsible therefor shall be liable for the unpaid wages. In addition, such contractor and subcontractor shall be liable to the United States (in the case of work done under contract for the District of Columbia or a territory, to such District or to such territory), for liquidated damages. Such liquidated damages shall be computed with respect to each individual laborer or mechanic, including watchmen and guards, employed in violation of the clause set forth in paragraph (1.) of this section, in the sum of $10 for each calendar day on which such individual was required or permitted to work in excess of the standard workweek of forty hours without payment of the overtime wages required by the clause set forth in paragraph (1.) of this section.

3. Withholding for unpaid wages and liquidated damages. The FHWA or the contacting agency shall upon its own action or upon written request of an authorized representative of the Department of Labor withhold or cause to be withheld, from any moneys payable on account of work performed by the contractor or subcontractor under any such contract or any other Federal contract with the same prime contractor, or any other federally-assisted contract subject to the Contract Work Hours and Safety Standards Act, which is held by the same prime contractor, such sums as may be determined to be necessary to satisfy any liabilities of such contractor or subcontractor for unpaid wages and liquidated damages as provided in the clause set forth in paragraph (2.) of this section.

4. Subcontracts. The contractor or subcontractor shall insert in any subcontracts the clauses set forth in paragraph (1.) through (4.) of this section and also a clause requiring the subcontractors to include these clauses in any lower tier subcontracts. The prime contractor shall be responsible for compliance by any subcontractor or lower tier subcontractor with the clauses set forth in paragraphs (1.) through (4.) of this section.

VI. SUBLETTING OR ASSIGNING THE CONTRACT

This provision is applicable to all Federal-aid construction contracts on the National Highway System.

1. The contractor shall perform with its own organization contract work amounting to not less than 30 percent (or a greater percentage if specified elsewhere in the contract) of the total original contract price, excluding any specialty items designated by the contracting agency. Specialty items may be performed by subcontract and the amount of any such specialty items performed may be deducted from the total original contract price before computing the amount of work required to be performed by the contractor's own organization (23 CFR 635.116).

a. The term "perform work with its own organization" refers to workers employed or leased by the prime contractor, and equipment owned or rented by the prime contractor, with or without operators. Such term does not include employees or equipment of a subcontractor or lower tier subcontractor, agents of the prime contractor, or any other assignees. The term may include payments for the costs of hiring leased employees from an employee leasing firm meeting all relevant Federal and State regulatory requirements. Leased employees may only be included in this term if the prime contractor meets all of the following conditions:

(1) the prime contractor maintains control over the supervision of the day-to-day activities of the leased employees;
(2) the prime contractor remains responsible for the quality of the work of the leased employees;
(3) the prime contractor retains all power to accept or exclude individual employees from work on the project; and
(4) the prime contractor remains ultimately responsible for the payment of predetermined minimum wages, the submission of payrolls, statements of compliance and all other Federal regulatory requirements.

b. "Specialty Items" shall be construed to be limited to work that requires highly specialized knowledge, abilities, or equipment not ordinarily available in the type of contracting organizations qualified and expected to bid or propose on the contract as a whole and in general are to be limited to minor components of the overall contract.

2. The contract amount upon which the requirements set forth in paragraph (1) of Section VI is computed includes the cost of material and manufactured products which are to be purchased or produced by the contractor under the contract provisions.

3. The contractor shall furnish (a) a competent superintendent or supervisor who is employed by the firm, has full authority to direct performance of the work in accordance with the contract requirements, and is in charge of all construction operations (regardless of who performs the work) and (b) such other of its own organizational resources (supervision, management, and engineering services) as the contracting officer determines is necessary to assure the performance of the contract.

4. No portion of the contract shall be sublet, assigned or otherwise disposed of except with the written consent of the contracting officer, or authorized representative, and such consent when given shall not be construed to relieve the contractor of any responsibility for the fulfillment of the contract. Written consent will be given only after the contracting agency has assured that each subcontract is evidenced in writing and that it contains all pertinent provisions and requirements of the prime contract.

5. The 30% self-performance requirement of paragraph (1) is not applicable to design-build contracts; however, contracting agencies may establish their own self-performance requirements.

VII. SAFETY: ACCIDENT PREVENTION

This provision is applicable to all Federal-aid construction contracts and to all related subcontracts.

1. In the performance of this contract the contractor shall comply with all applicable Federal, State, and local laws governing safety, health, and sanitation (23 CFR 635). The contractor shall provide all safeguards, safety devices and protective equipment and take any other needed actions as it determines, or as the contracting officer may determine, to be reasonably necessary to protect the life and health of employees on the job and the safety of the public and to protect property in connection with the performance of the work covered by the contract.

2. It is a condition of this contract, and shall be made a condition of each subcontract, which the contractor enters into pursuant to this contract, that the contractor and any subcontractor shall not permit any employee, in performance of the contract, to work in surroundings or under conditions which are unsanitary, hazardous or dangerous to his/her health or safety, as determined under construction safety and health standards (29 CFR 1926) promulgated by the Secretary of Labor, in accordance with Section 107 of the Contract Work Hours and Safety Standards Act (40 U.S.C. 3704).

3. Pursuant to 29 CFR 1926.3, it is a condition of this contract that the Secretary of Labor or authorized representative thereof, shall have right of entry to any site of contract performance to inspect or investigate the matter of compliance with the construction safety and health standards and to carry out the duties of the Secretary under Section 107 of the Contract Work Hours and Safety Standards Act (40 U.S.C.3704).

VIII. FALSE STATEMENTS CONCERNING HIGHWAY PROJECTS

This provision is applicable to all Federal-aid construction contracts and to all related subcontracts.

In order to assure high quality and durable construction in conformity with approved plans and specifications and a high degree of reliability on statements and representations made by engineers, contractors, suppliers, and workers on Federal-aid highway projects, it is essential that all persons concerned with the project perform their functions as carefully, thoroughly, and honestly as possible. Willful falsification, distortion, or misrepresentation with respect to any facts related to the project is a violation of Federal law. To prevent any misunderstanding regarding the seriousness of these and similar acts, Form FHWA-1022 shall be posted on each Federal-aid highway project (23 CFR 635) in one or more places where it is readily available to all persons concerned with the project:

18 U.S.C. 1020 reads as follows:

"Whoever, being an officer, agent, or employee of the United States, or of any State or Territory, or whoever, whether a person, association, firm, or corporation, knowingly makes any false statement, false representation, or false report as to the character, quality, quantity, or cost of the material used or to be used, or the quantity or quality of the work performed or to be performed, or the cost thereof in connection with the submission of plans, maps, specifications, contracts, or costs of construction on any highway or related project submitted for approval to the Secretary of Transportation; or

Whoever knowingly makes any false statement, false representation, false report or false claim with respect to the character, quality, quantity, or cost of any work performed or to be performed, or materials furnished or to be furnished, in connection with the construction of any highway or related project approved by the Secretary of Transportation; or

Whoever knowingly makes any false statement or false representation as to material fact in any statement, certificate, or report submitted pursuant to provisions of the Federal-aid Roads Act approved July 1, 1916, (39 Stat. 355), as amended and supplemented;

Shall be fined under this title or imprisoned not more than 5 years or both."

IX. IMPLEMENTATION OF CLEAN AIR ACT AND FEDERAL WATER POLLUTION CONTROL ACT

This provision is applicable to all Federal-aid construction contracts and to all related subcontracts.

By submission of this bid/proposal or the execution of this contract, or subcontract, as appropriate, the bidder, proposer, Federal-aid construction contractor, or subcontractor, as appropriate, will be deemed to have stipulated as follows:

1. That any person who is or will be utilized in the performance of this contract is not prohibited from receiving an award due to a violation of Section 508 of the Clean Water Act or Section 306 of the Clean Air Act.
2. That the contractor agrees to include or cause to be included the requirements of paragraph (1) of this Section X in every subcontract, and further agrees to take such action as the contracting agency may direct as a means of enforcing such requirements.

X. CERTIFICATION REGARDING DEBARMENT, SUSPENSION, INELIGIBILITY AND VOLUNTARY EXCLUSION

This provision is applicable to all Federal-aid construction contracts, design-build contracts, subcontracts, lower-tier subcontracts, purchase orders, lease agreements, consultant contracts or any other covered transaction requiring FHWA approval or that is estimated to cost $25,000 or more – as defined in 2 CFR Parts 180 and 1200.

1. Instructions for Certification – First Tier Participants:

a. By signing and submitting this proposal, the prospective first tier participant is providing the certification set out below.

b. The inability of a person to provide the certification set out below will not necessarily result in denial of participation in this covered transaction. The prospective first tier participant shall submit an explanation of why it cannot provide the certification set out below. The certification or explanation will be considered in connection with the department or agency's determination whether to enter into this transaction. However, failure of the prospective first tier participant to furnish a certification or an explanation shall disqualify such a person from participation in this transaction.

c. The certification in this clause is a material representation of fact upon which reliance was placed when the contracting agency determined to enter into this transaction. If it is later determined that the prospective participant knowingly rendered an erroneous certification, in addition to other remedies available to the Federal Government, the contracting agency may terminate this transaction for cause of default.

d. The prospective first tier participant shall provide immediate written notice to the contracting agency to whom this proposal is submitted if any time the prospective first tier participant learns that its certification was erroneous when submitted or has become erroneous by reason of changed circumstances.

e. The terms "covered transaction," "debarred," "suspended," "ineligible," "participant," "person," "principal," and "voluntarily excluded," as used in this clause, are defined in 2 CFR Parts 180 and 1200. "First Tier Covered Transactions" refers to any covered transaction between a grantee or subgrantee of Federal funds and a participant (such as the prime or general contract). "Lower Tier Covered Transactions" refers to any covered transaction under a First Tier Covered Transaction (such as subcontracts). "First Tier Participant" refers to the participant who has entered into a covered transaction with a grantee or subgrantee of Federal funds (such as the prime or general contractor). "Lower Tier Participant" refers any participant who has entered into a covered transaction with a First Tier Participant or other Lower Tier Participants (such as subcontractors and suppliers).

f. The prospective first tier participant agrees by submitting this proposal that, should the proposed covered transaction be entered into, it shall not knowingly enter into any lower tier covered transaction with a person who is debarred, suspended, declared ineligible, or voluntarily excluded from participation in this covered transaction, unless authorized by the department or agency entering into this transaction.

g. The prospective first tier participant further agrees by submitting this proposal that it will include the clause titled "Certification Regarding Debarment, Suspension, Ineligibility and Voluntary Exclusion-Lower Tier Covered Transactions," provided by the department or contracting agency, entering into this covered transaction, without modification, in all lower tier covered transactions and in all solicitations for lower tier covered transactions exceeding the $25,000 threshold.

h. A participant in a covered transaction may rely upon a certification of a prospective participant in a lower tier covered transaction that is not debarred, suspended, ineligible, or voluntarily excluded from the covered transaction, unless it knows that the certification is erroneous. A participant is responsible for ensuring that its principals are not suspended, debarred, or otherwise ineligible to participate in covered transactions. To verify the eligibility of its principals, as well as the eligibility of any lower tier prospective participants, each participant may, but is not required to, check the Excluded Parties List System website (https://www.epls.gov/), which is compiled by the General Services Administration.

i. Nothing contained in the foregoing shall be construed to require the establishment of a system of records in order to render in good faith the certification required by this clause. The knowledge and information of the prospective participant is not required to exceed that which is normally possessed by a prudent person in the ordinary course of business dealings.

j. Except for transactions authorized under paragraph (f) of these instructions, if a participant in a covered transaction knowingly enters into a lower tier covered transaction with a person who is suspended, debarred, ineligible, or voluntarily excluded from participation in this transaction, in addition to other remedies available to the Federal Government, the department or agency may terminate this transaction for cause or default.

* * * * *

2. Certification Regarding Debarment, Suspension, Ineligibility and Voluntary Exclusion – First Tier Participants:

a. The prospective first tier participant certifies to the best of its knowledge and belief, that it and its principals:

(1) Are not presently debarred, suspended, proposed for debarment, declared ineligible, or voluntarily excluded from participating in covered transactions by any Federal department or agency;

(2) Have not within a three-year period preceding this proposal been convicted of or had a civil judgment rendered against them for commission of fraud or a criminal offense in connection with obtaining, attempting to obtain, or performing a public (Federal, State or local) transaction or contract under a public transaction; violation of Federal or State antitrust statutes or commission of embezzlement, theft, forgery, bribery, falsification or destruction of records, making false statements, or receiving stolen property;

(3) Are not presently indicted for or otherwise criminally or civilly charged by a governmental entity (Federal, State or local) with commission of any of the offenses enumerated in paragraph (a)(2) of this certification; and

(4) Have not within a three-year period preceding this application/proposal had one or more public transactions (Federal, State or local) terminated for cause or default.

b. Where the prospective participant is unable to certify to any of the statements in this certification, such prospective participant shall attach an explanation to this proposal.

2. **Instructions for Certification - Lower Tier Participants:**

(Applicable to all subcontracts, purchase orders and other lower tier transactions requiring prior FHWA approval or estimated to cost $25,000 or more - 2 CFR Parts 180 and 1200)

a. By signing and submitting this proposal, the prospective lower tier is providing the certification set out below.

b. The certification in this clause is a material representation of fact upon which reliance was placed when this transaction was entered into. If it is later determined that the prospective lower tier participant knowingly rendered an erroneous certification, in addition to other remedies available to the Federal Government, the department, or agency with which this transaction originated may pursue available remedies, including suspension and/or debarment.

c. The prospective lower tier participant shall provide immediate written notice to the person to which this proposal is submitted if at any time the prospective lower tier participant learns that its certification was erroneous by reason of changed circumstances.

d. The terms "covered transaction," "debarred," "suspended," "ineligible," "participant," "person," "principal," and "voluntarily excluded," as used in this clause, are defined in 2 CFR Parts 180 and 1200. You may contact the person to which this proposal is submitted for assistance in obtaining a copy of those regulations. "First Tier Covered Transactions" refers to any covered transaction between a grantee or subgrantee of Federal funds and a participant (such as the prime or general contract). "Lower Tier Covered Transactions" refers to any covered transaction under a First Tier Covered Transaction (such as subcontracts). "First Tier Participant" refers to the participant who has entered into a covered transaction with a grantee or subgrantee of Federal funds (such as the prime or general contractor). "Lower Tier Participant" refers any participant who has entered into a covered transaction with a First Tier Participant or other Lower Tier Participants (such as subcontractors and suppliers).

e. The prospective lower tier participant agrees by submitting this proposal that, should the proposed covered transaction be entered into, it shall not knowingly enter into any lower tier covered transaction with a person who is debarred, suspended, declared ineligible, or voluntarily excluded from participation in this covered transaction, unless authorized by the department or agency with which this transaction originated.

f. The prospective lower tier participant further agrees by submitting this proposal that it will include this clause titled "Certification Regarding Debarment, Suspension, Ineligibility and Voluntary Exclusion-Lower Tier Covered Transaction," without modification, in all lower tier covered transactions and in all solicitations for lower tier covered transactions exceeding the $25,000 threshold.

g. A participant in a covered transaction may rely upon a certification of a prospective participant in a lower tier covered transaction that is not debarred, suspended, ineligible, or voluntarily excluded from the covered transaction, unless it knows that the certification is erroneous. A participant is responsible for ensuring that its principals are not suspended, debarred, or otherwise ineligible to participate in covered transactions. To verify the eligibility of its principals, as well as the eligibility of any lower tier prospective participants, each participant may, but is not required to, check the Excluded Parties List System website (https://www.epls.gov/), which is compiled by the General Services Administration.

h. Nothing contained in the foregoing shall be construed to require establishment of a system of records in order to render in good faith the certification required by this clause. The knowledge and information of participant is not required to exceed that which is normally possessed by a prudent person in the ordinary course of business dealings.

i. Except for transactions authorized under paragraph e of these instructions, if a participant in a covered transaction knowingly enters into a lower tier covered transaction with a person who is suspended, debarred, ineligible, or voluntarily excluded from participation in this transaction, in addition to other remedies available to the Federal Government, the

department or agency with which this transaction originated may pursue available remedies, including suspension and/or debarment.

* * * * *

Certification Regarding Debarment, Suspension, Ineligibility and Voluntary Exclusion--Lower Tier Participants:

1. The prospective lower tier participant certifies, by submission of this proposal, that neither it nor its principals is presently debarred, suspended, proposed for debarment, declared ineligible, or voluntarily excluded from participating in covered transactions by any Federal department or agency.

2. Where the prospective lower tier participant is unable to certify to any of the statements in this certification, such prospective participant shall attach an explanation to this proposal.

* * * * *

XI. CERTIFICATION REGARDING USE OF CONTRACT FUNDS FOR LOBBYING

This provision is applicable to all Federal-aid construction contracts and to all related subcontracts which exceed $100,000 (49 CFR 20).

1. The prospective participant certifies, by signing and submitting this bid or proposal, to the best of his or her knowledge and belief, that:

a. No Federal appropriated funds have been paid or will be paid, by or on behalf of the undersigned, to any person for influencing or attempting to influence an officer or employee of any Federal agency, a Member of Congress, an officer or employee of Congress, or an employee of a Member of Congress in connection with the awarding of any Federal contract, the making of any Federal grant, the making of any Federal loan, the entering into of any cooperative agreement, and the extension, continuation, renewal, amendment, or modification of any Federal contract, grant, loan, or cooperative agreement.

b. If any funds other than Federal appropriated funds have been paid or will be paid to any person for influencing or attempting to influence an officer or employee of any Federal agency, a Member of Congress, an officer or employee of Congress, or an employee of a Member of Congress in connection with this Federal contract, grant, loan, or cooperative agreement, the undersigned shall complete and submit Standard Form-LLL, "Disclosure Form to Report Lobbying," in accordance with its instructions.

2. This certification is a material representation of fact upon which reliance was placed when this transaction was made or entered into. Submission of this certification is a prerequisite for making or entering into this transaction imposed by 31 U.S.C. 1352. Any person who fails to file the required certification shall be subject to a civil penalty of not less than $10,000 and not more than $100,000 for each such failure.

3. The prospective participant also agrees by submitting its bid or proposal that the participant shall require that the language of this certification be included in all lower tier subcontracts, which exceed $100,000 and that all such recipients shall certify and disclose accordingly.

ATTACHMENT A - EMPLOYMENT AND MATERIALS PREFERENCE FOR APPALACHIAN DEVELOPMENT HIGHWAY SYSTEM OR APPALACHIAN LOCAL ACCESS ROAD CONTRACTS

This provision is applicable to all Federal-aid projects funded under the Appalachian Regional Development Act of 1965.

1. During the performance of this contract, the contractor undertaking to do work which is, or reasonably may be, done as on-site work, shall give preference to qualified persons who regularly reside in the labor area as designated by the DOL wherein the contract work is situated, or the subregion, or the Appalachian counties of the State wherein the contract work is situated, except:

a. To the extent that qualified persons regularly residing in the area are not available.

b. For the reasonable needs of the contractor to employ supervisory or specially experienced personnel necessary to assure an efficient execution of the contract work.

c. For the obligation of the contractor to offer employment to present or former employees as the result of a lawful collective bargaining contract, provided that the number of nonresident persons employed under this subparagraph (1c) shall not exceed 20 percent of the total number of employees employed by the contractor on the contract work, except as provided in subparagraph (4) below.

2. The contractor shall place a job order with the State Employment Service indicating (a) the classifications of the laborers, mechanics and other employees required to perform the contract work, (b) the number of employees required in each classification, (c) the date on which the participant estimates such employees will be required, and (d) any other pertinent information required by the State Employment Service to complete the job order form. The job order may be placed with the State Employment Service in writing or by telephone. If during the course of the contract work, the information submitted by the contractor in the original job order is substantially modified, the participant shall promptly notify the State Employment Service.

3. The contractor shall give full consideration to all qualified job applicants referred to him by the State Employment Service. The contractor is not required to grant employment to any job applicants who, in his opinion, are not qualified to perform the classification of work required.

4. If, within one week following the placing of a job order by the contractor with the State Employment Service, the State Employment Service is unable to refer any qualified job applicants to the contractor, or less than the number requested, the State Employment Service will forward a certificate to the contractor indicating the unavailability of applicants. Such certificate shall be made a part of the contractor's permanent project records. Upon receipt of this certificate, the contractor may employ persons who do not normally reside in the labor area to fill positions covered by the certificate, notwithstanding the provisions of subparagraph (1c) above.

5. The provisions of 23 CFR 633.207(e) allow the contracting agency to provide a contractual preference for the use of mineral resource materials native to the Appalachian region.

6. The contractor shall include the provisions of Sections 1 through 4 of this Attachment A in every subcontract for work which is, or reasonably may be, done as on-site work.

2004 Specifications

SPECIAL PROVISION
000---003
Notice to All Bidders

To report bid rigging activities call:

1-800-424-9071

The U.S. Department of Transportation (DOT) operates the above toll-free “hotline” Monday through Friday, 8:00 a.m. to 5:00 p.m., eastern time. Anyone with knowledge of possible bid rigging, bidder collusion, or other fraudulent activities should use the “hotline” to report such activities.

The “hotline” is part of the DOT's continuing effort to identify and investigate highway construction contract fraud and abuse and is operated under the direction of the DOT Inspector General. All information will be treated confidentially and caller anonymity will be respected.

2004 Specifications

SPECIAL PROVISION
000---004
Notice of Requirement for Affirmative Action to Ensure Equal Employment Opportunity (Executive Order 11246)

1. **General.** In addition to the affirmative action requirements of the Special Provision titled "Standard Federal Equal Employment Opportunity Construction Contract Specifications" as set forth elsewhere in this proposal, the Bidder's attention is directed to the specific requirements for utilization of minorities and females as set forth below.

2. **Goals.**

   a. Goals for minority and female participation are hereby established in accordance with 41 CFR 60-4.

   b. The goals for minority and female participation expressed in percentage terms for the Contractor’s aggregate work force in each trade on all construction work in the covered area, are as follows:

Goals for minority participation in each trade (percent)	Goals for female participation in each trade (percent)
See Table 1	6.9

   c. These goals are applicable to all the Contractor’s construction work (whether or not it is Federal or federally assisted) performed in the covered area. If the Contractor performs construction work in a geographical area located outside of the covered area, it shall apply the goals established for such geographical area where the work is actually performed. With regard to this second area, the Contractor also is subject to the goals for both its federally involved and non-federally involved construction. The Contractor’s compliance with the Executive Order and the regulations in 41 CFR Part 60-4 shall be based on its implementation of the Standard Federal Equal Employment Opportunity Construction Contract Specifications Special Provision and its efforts to meet the goals. The hours of minority and female employment and training must be substantially uniform throughout the length of the contract, and in each trade, and the Contractor shall make a good faith effort to employ minorities and women evenly on each of its projects. The transfer of minority and female employees or trainees

from Contractor to Contractor or from project to project for the sole purpose of meeting the Contractor's goals shall be a violation of the contract, the Executive Order and the regulations in 41 CFR Part 60-4. Compliance with the goals will be measured against the total work hours performed.

d. A contractor or subcontractor will be considered in compliance with these provisions by participation in the Texas Highway-Heavy Branch, AGC, Statewide Training and Affirmative Action Plan. Provided that each contractor or subcontractor participating in this plan must individually comply with the equal opportunity clause set forth in 41 CFR 60-1.4 and must make a good faith effort to achieve the goals set forth for each participating trade in the plan in which it has employees. The overall good performance of other contractors and subcontractors toward a goal in an approved plan does not excuse any covered contractor's or subcontractor's failure to make good faith efforts to achieve the goals contained in these provisions. Contractors or subcontractors participating in the plan must be able to demonstrate their participation and document their compliance with the provisions of this Plan.

3. Subcontracting. The Contractor shall provide written notification to the Department within 10 working days of award of any construction subcontract in excess of $10,000 at any tier for construction work under the contract resulting from this solicitation pending concurrence of the Department in the award. The notification shall list the names, address and telephone number of the subcontractor; employer identification number; estimated dollar amount of the subcontract; estimated starting and completion dates of the subcontract; and the geographical area in which the contract is to be performed.

4. Covered Area. As used in this special provision, and in the contract resulting from this solicitation, the geographical area covered by these goals for female participation is the State of Texas. The geographical area covered by these goals for other minorities are the counties in the State of Texas as indicated in Table 1.

5. Reports. The Contractor is hereby notified that he may be subject to the Office of Federal Contract Compliance Programs (OFCCP) reporting and record keeping requirements as provided for under Executive Order 11246 as amended. OFCCP will provide direct notice to the Contractor as to the specific reporting requirements that he will be expected to fulfill.

3-5 000---004

Table 1

County	Goals for Minority Participation	County	Goals for Minority Participation
Anderson	22.5	Concho	20.0
Andrews	18.9	Cooke	17.2
Angelina	22.5	Coryell	16.4
Aransas	44.2	Cottle	11.0
Archer	11.0	Crane	18.9
Armstrong	11.0	Crockett	20.0
Atascosa	49.4	Crosby	19.5
Austin	27.4	Culberson	49.0
Bailey	19.5	Dallam	11.0
Bandera	49.4	Dallas	18.2
Bastrop	24.2	Dawson	19.5
Baylor	11.0	Deaf Smith	11.0
Bee	44.2	Delta	17.2
Bell	16.4	Denton	18.2
Bexar	47.8	DeWitt	27.4
Blanco	24.2	Dickens	19.5
Borden	19.5	Dimmit	49.4
Bosque	18.6	Donley	11.0
Bowie	19.7	Duval	44.2
Brazoria	27.3	Eastland	10.9
Brazos	23.7	Ector	15.1
Brewster	49.0	Edwards	49.4
Briscoe	11.0	Ellis	18.2
Brooks	44.2	El Paso	57.8
Brown	10.9	Erath	17.2
Burleson	27.4	Falls	18.6
Burnet	24.2	Fannin	17.2
Caldwell	24.2	Fayette	27.4
Calhoun	27.4	Fisher	10.9
Callahan	11.6	Floyd	19.5
Cameron	71.0	Foard	11.0
Camp	20.2	Fort Bend	27.3
Carson	11.0	Franklin	17.2
Cass	20.2	Freestone	18.6
Castro	11.0	Frio	49.4
Chambers	27.4	Gaines	19.5
Cherokee	22.5	Galveston	28.9
Childress	11.0	Garza	19.5
Clay	12.4	Gillespie	49.4
Cochran	19.5	Glasscock	18.9
Coke	20.0	Goliad	27.4
Coleman	10.9	Gonzales	49.4
Collin	18.2	Gray	11.0
Collingsworth	11.0	Grayson	9.4
Colorado	27.4	Gregg	22.8
Comal	47.8	Grimes	27.4
Comanche	10.9	Guadalupe	47.8

County	Goals for Minority Participation	County	Goals for Minority Participation
Hale	19.5	Lavaca	27.4
Hall	11.0	Lee	24.2
Hamilton	18.6	Leon	27.4
Hansford	11.0	Liberty	27.3
Hardeman	11.0	Limestone	18.6
Hardin	22.6	Lipscomb	11.0
Harris	27.3	Live Oak	44.2
Harrison	22.8	Llano	24.2
Hartley	11.0	Loving	18.9
Haskell	10.9	Lubbock	19.6
Hays	24.1	Lynn	19.5
Hemphill	11.0	Madison	27.4
Henderson	22.5	Marion	22.5
Hidalgo	72.8	Martin	18.9
Hill	18.6	Mason	20.0
Hockley	19.5	Matagorda	27.4
Hood	18.2	Maverick	49.4
Hopkins	17.2	McCulloch	20.0
Houston	22.5	McLennan	20.7
Howard	18.9	McMullen	49.4
Hudspeth	49.0	Medina	49.4
Hunt	17.2	Menard	20.0
Hutchinson	11.0	Midland	19.1
Irion	20.0	Milam	18.6
Jack	17.2	Mills	18.6
Jackson	27.4	Mitchell	10.9
Jasper	22.6	Montague	17.2
Jeff Davis	49.0	Montgomery	27.3
Jefferson	22.6	Moore	11.0
Jim Hogg	49.4	Morris	20.2
Jim Wells	44.2	Motley	19.5
Johnson	18.2	Nacogdoches	22.5
Jones	11.6	Navarro	17.2
Karnes	49.4	Newton	22.6
Kaufman	18.2	Nolan	10.9
Kendall	49.4	Nueces	41.7
Kenedy	44.2	Ochiltree	11.0
Kent	10.9	Oldham	11.0
Kerr	49.4	Orange	22.6
Kimble	20.0	Palo Pinto	17.2
King	19.5	Panola	22.5
Kinney	49.4	Parker	18.2
Kleberg	44.2	Parmer	11.0
Knox	10.9	Pecos	18.9
Lamar	20.2	Polk	27.4
Lamb	19.5	Potter	9.3
Lampasas	18.6	Presidio	49.0
LaSalle	49.4	Rains	17.2

County	Goals for Minority Participation	County	Goals for Minority Participation
Randall	9.3	Webb	87.3
Reagan	20.0	Wharton	27.4
Real	49.4	Wheeler	11.0
Red River	20.2	Wichita	12.4
Reeves	18.9	Wilbarger	11.0
Refugio	44.2	Willacy	72.9
Roberts	11.0	Williamson	24.1
Robertson	27.4	Wilson	49.4
Rockwall	18.2	Winkler	18.9
Runnels	20.0	Wise	18.2
Rusk	22.5	Wood	22.5
Sabine	22.6	Yoakum	19.5
San Augustine	22.5	Young	11.0
San Jacinto	27.4	Zapata	49.4
San Patricio	41.7	Zavala	49.4
San Saba	20.0		
Schleicher	20.0		
Scurry	10.9		
Shackelford	10.9		
Shelby	22.5		
Sherman	11.0		
Smith	23.5		
Somervell	17.2		
Starr	72.9		
Stephens	10.9		
Sterling	20.0		
Stonewall	10.9		
Sutton	20.0		
Swisher	11.0		
Tarrant	18.2		
Taylor	11.6		
Terrell	20.0		
Terry	19.5		
Throckmorton	10.9		
Titus	20.2		
Tom Green	19.2		
Travis	24.1		
Trinity	27.4		
Tyler	22.6		
Upshur	22.5		
Upton	18.9		
Uvalde	49.4		
Val Verde	49.4		
Van Zandt	17.2		
Victoria	27.4		
Walker	27.4		
Waller	27.3		
Ward	18.9		
Washington	27.4		

SPECIAL PROVISION
000---006
Standard Federal Equal Employment Opportunity Construction Contract Specifications (Executive Order 11246)

1. As used in these specifications:

a. "Covered area" means the geographical area described in the solicitation from which this contract resulted;

b. "Director" means Director, Office of Federal Contract Compliance Programs, United States Department of Labor, or any person to whom the Director delegates authority;

c. "Employer identification number" means the Federal Social Security number used on the Employer's Quarterly Federal Tax Return, U.S. Treasury Department Form 941.

d. "Minority" includes:

(i) Black (all persons having origins in any of the Black African racial groups not of Hispanic origin);

(ii) Hispanic (all persons of Mexican, Puerto Rican, Cuban, Central or South American or other Spanish Culture or origin, regardless of race);

(iii) Asian and Pacific Islander (all persons having origins in any of the original peoples of the Far East, Southeast Asia, the Indian Subcontinent, or the Pacific Islands); and

(iv) American Indian or Alaskan Native (all persons having origins in any of the original peoples of North American and maintaining identifiable tribal affiliations through membership and participation or community identification).

2. Whenever the Contractor, or any Subcontractor at any tier, subcontracts a portion of the work involving any construction trade, it shall physically include in each subcontract in excess of $10,000 the provisions of these specifications and the Notice which contains the applicable goals for minority and female participation and which is set forth in the solicitations from which this contract resulted.

3. If the Contractor is participating (pursuant to 41 CFR 60-4.5) in a Hometown Plan approved by the U. S. Department of Labor in the covered area either individually or through an association, its affirmative action obligations on all work in the Plan area (including goals and timetables) shall be in accordance with that plan for those trades which have unions participating in the Plan. Contractors must be able to demonstrate their participation in and compliance with the provisions of any such Hometown Plan. Each Contractor or Subcontractor participating in an approved Plan is individually required to comply with its obligations under the EEO clause, and to make a good faith effort to achieve each goal under the Plan in each trade in which it has employees. The overall good faith performance by other Contractors or Subcontractors toward a goal in an approved Plan does not excuse any covered Contractor's or Subcontractor's failure to take good faith efforts to achieve the Plan goals and timetables.

4. The Contractor shall implement the specific affirmative action standards provided in paragraphs 7a through p of these specifications. The goals set forth in the solicitation from which this contract resulted are expressed as percentages of the total hours of employment and training of minority and female utilization the Contractor should reasonably be able to achieve in each construction trade in which it has employees in the covered area. Covered construction contractors performing contracts in geographical areas where they do not have a Federal or federally assisted construction contract shall apply the minority and female goals established for the geographical area where the contract is being performed. Goals are published periodically in the Federal Register in notice form and such notices may be obtained from any Office of Federal Contract Compliance Programs office or any Federal procurement contracting officer. The Contractor is expected to make substantially uniform progress toward its goals in each craft during the period specified.

5. Neither the provisions of any collective bargaining agreement, nor the failure by a union with whom the Contractor has a collective bargaining agreement, to refer either minorities or women shall excuse the Contractor's obligations under these specifications, Executive Order 11246, or the regulations promulgated pursuant thereto.

6. In order for the nonworking training hours of apprentices and trainees to be counted in meeting the goals, such apprentices and trainees must be employed by the Contractor during the training period, and the Contractor must have made a commitment to employ the apprentices and trainees at the completion of their training, subject to the availability of employment opportunities. Trainees must be trained pursuant to training programs approved by the U. S. Department of Labor.

7. The Contractor shall take specific affirmative actions to ensure equal employment opportunity. The evaluation of the Contractor's compliance with these specifications shall be based upon its effort to achieve maximum results from its actions. The Contractor shall document these efforts fully, and shall implement affirmative action steps at least as extensive as the following:

a. Ensure and maintain a working environment free of harassment, intimidation, and coercion at all sites, and in all facilities at which the Contractor's employees are assigned to work. The Contractor, where possible, will assign two or more women to each construction project. The Contractor shall specifically ensure that all foremen, superintendents, and other on-site supervisory personnel are aware of and carry out the Contractor's obligation to maintain such a working environment, with specific attention to minority or female individuals working at such sites or in such facilities.

b. Establish and maintain a current list of minority and female recruitment sources, provide written notification to minority and female recruitment sources and to community organizations when the Contractor or its unions have employment opportunities available, and maintain a record of the organizations' responses.

c. Maintain a current file of the names, addresses and telephone numbers of each minority and female off-the-street applicant and minority or female referral from a union, a recruitment source or community organization and of what action was taken with respect to each such individual. If such individual was sent to the union hiring hall for referral and was not referred back to the Contractor by the union or, if referred, not employed by the Contractor, this shall be documented in the file with the reason therefor, along with whatever additional actions the Contractor may have taken.

d. Provide immediate written notification to the Director when the union or unions with which the Contractor has a collective bargaining agreement has not referred to the Contractor a minority person or woman sent by the Contractor, or when the Contractor has other information that the union referral Process has impeded the Contractor's efforts to meet its obligations.

e. Develop on-the-job training opportunities and/or participate in training programs for the area which expressly include minorities and women, including upgrading programs and apprenticeship and trainee programs relevant to the Contractor's employment needs, especially those programs funded or approved by the Department of Labor. The Contractor shall provide notice of these programs to the sources compiled under 7b above.

f. Disseminate the Contractor's EEO policy by providing notice of the policy to unions and training programs and requesting their cooperation in assisting the Contractor in meeting its EEO obligations; by including it in any policy manual and Collective bargaining agreement; by publicizing it in the company newspaper, annual report, etc.; by specific review of the policy with all management personnel and with all minority and female employees at least once a year; and by posting the company EEO policy on bulletin boards accessible to all employees at each location where construction work is performed.

g. Review, at least annually, the company's EEO policy and affirmative action obligations under these specifications with all employees having any responsibility for hiring, assignment, layoff, termination or other employment decisions including specific review of these items with onsite supervisory personnel such as Superintendents, General Foremen, etc., prior to the initiation of construction work

at any job site. A written record shall be made and maintained identifying the time and place of these meetings, persons attending, subject matter discussed, and disposition of the subject matter.

h. Disseminate the Contractor's EEO policy externally by including it in any advertising in the news media, specifically including minority and female news media, and providing written notification to and discussing the Contractor's EEO policy with other Contractors and Subcontractors with whom the Contractor does or anticipates doing business.

i. Direct its recruitment efforts, both oral and written, to minority, female and community organizations, to schools with minority and female students and to minority and female recruitment and training organizations serving the Contractor's recruitment area and employment needs. Not later than one month prior to the date for the acceptance of
applications for apprenticeship or other training by any recruitment source, the Contractor shall send written notification to organizations such as the above, describing the openings, screening procedures, and tests to be used in the selection process.

j. Encourage present minority and female employees to recruit other minority persons and women and, where reasonable, provide after school, summer and vacation employment to minority and female youth both on the site and in other areas of a Contractor's workforce.

k. Validate all tests and other selection requirements where there is an obligation to do so under 41 CFR Part 60-3.

l. Conduct, at least annually, an inventory and evaluation at least of all minority and female personnel for promotional opportunities and encourage these employees to seek or to prepare for, through appropriate training, etc., such opportunities.

m. Ensure that seniority practices, job classifications, work assignments and other personnel practices, do not have a discriminatory effect by continually monitoring all personnel and employment related activities to ensure that the EEO policy and the Contractor's obligations under these specifications are being carried out.

n. Ensure that all facilities and company activities are non-segregated except that separate or single-user toilet and necessary changing facilities shall be provided to assure privacy between the sexes.

o. Document and maintain a record of all solicitations of offers for subcontracts from minority and female construction contractors and suppliers, including circulation of solicitations to minority and female contractor associations and other business associations.

p. Conduct a review, at least annually, of all supervisors' adherence to and performance under the Contractor's EEO policies and affirmative action obligations.

8. Contractors are encouraged to participate in voluntary associations which assist in fulfilling one or more of their affirmative action obligations (7a through p). The efforts of a contractor association, joint contractor-union, contractor-community, or other similar group of which the contractor is a member and participant, may be asserted as fulfilling any one or more of its obligations under 7a through p of these Specifications provided that the contractor actively participates in the group, makes every effort to assure that the group has a positive impact on the employment of minorities and women in the industry, ensures that the concrete benefits of the program are reflected in the Contractor's minority and female workforce participation, makes a good faith effort to meet its individual goals and timetables, and can provide access to documentation which demonstrates the effectiveness of actions taken on behalf of the Contractor. The obligation to comply, however, is the Contractor's and failure of such a group to fulfill an obligation shall not be a defense for the Contractor's noncompliance.

9. A single goal for minorities and a separate single goal for women have been established. The Contractor, however, is required to provide equal employment opportunity and to take affirmative action for all minority groups, both male and female, and all women, both minority and non-minority. Consequently, the Contractor may be in violation of the Executive Order if a particular group is employed in a substantially disparate manner (for example, even though the Contractor has achieved its goals for

women generally, the Contractor may be in violation of the Executive Order if a specific minority group of women is underutilized).

10. Nondiscrimination programs require that Federal-aid recipients, subrecipients, and contractors prevent discrimination and ensure nondiscrimination in all of their programs and activities, whether those programs and activities are federally funded or not. The factors prohibited from serving as a basis for action or inaction which discriminates include race, color, national origin, sex, age, and handicap/disability. The efforts to prevent discrimination must address, but not be limited to a program's impacts, access, benefits, participation, treatment, services, contracting opportunities, training opportunities, investigations of complaints, allocations of funds, prioritization of projects, and the functions of right-of-way, research, planning, and design.

11. The Contractor shall not enter into any Subcontract with any person or firm debarred from Government contracts pursuant to Executive Order 11246.

12. The Contractor shall carry out such sanctions and penalties for violation of these specifications and of the Equal Opportunity Clause, including suspension, termination and cancellation of existing subcontracts as may be imposed or ordered pursuant to Executive Order 11246, as amended, and its implementing regulations, by the Office of Federal Contract Compliance Programs. Any contractor who fails to carry out such sanctions and penalties shall be in violation of these specifications and Executive Order 11246, as amended.

13. The Contractor, in fulfilling its obligations under these specifications, shall implement specific affirmative action steps, at least as extensive as those standards prescribed in paragraph 7 of these specifications, so as to achieve maximum results from its efforts to ensure equal employment opportunity. If the Contractor fails to comply with the requirements of the Executive Order, the implementing regulations, or these specifications, the Director shall proceed in accordance with 41 CFR 60-4.8.

14. The Contractor shall designate a responsible official to monitor all employment related activity to ensure that the company EEO policy is being carried out, to submit reports relating to the provisions hereof as may be required by the Government and to keep records. Records shall at least include for each employee the name, address, telephone numbers, construction trade, union affiliation if any, employee identification number when assigned, social security number, race, sex, status (e.g., mechanic, apprentice, trainee, helper, or laborer), dates of changes in status, hours worked per week in the indicated trade, rate of pay, and locations at which the work was performed. Records shall be maintained in an easily understandable and retrievable form; however, to the degree that existing records satisfy this requirement, contractors shall not be required to maintain separate records.

15. Nothing herein provided shall be construed as a limitation upon the application of other laws which establish different standards of compliance or upon the application of requirements for the hiring of local or other area residents (e.g., those under the Public Works Employment Act of 1977 and the Community Development Block Grant Program).

16. In addition to the reporting requirements set forth elsewhere in this contract, the Contractor and the subcontractors holding subcontracts, not including material suppliers, of $10,000 or more, shall submit for every month of July during which work is per-formed, employment data as contained under Form PR 1391 (Appendix C to 23 CFR, Part 230), and in accordance with the instructions included thereon.

SPECIAL PROVISION

000---807

On-the-Job Training Program

1. Description. Texas Department of Transportation's (TxDOT's) program to meet the requirements of the Federal-Aid Highway Act of 1970 and 23 CFR (Code of Federal Regulations) Part 230, Subpart A. The objective is to develop skill improvement programs to provide opportunities for unskilled workers,

particularly minorities, women, and disadvantaged persons, to acquire training in the skilled construction trades.

2. **Trainee Assignment.** TxDOT's Office of Civil Rights will allocate training assignments to prequalified contractors based on the past contract volume of federal-aid work performed with TxDOT. TxDOT will notify each contractor who has met the volume of work threshold at the beginning of each reporting year and advise them of the number of trainees they are expected to support.

3. **Program Requirements.** Contractors found to have reached the level(s), as identified in the TxDOT On-The-Job Training (OJT) program document, are required to fulfill all of the requirements of the OJT program at no additional cost to the department other than contractor requested reimbursement of $0.80 per hour for a trainee.

   The contractors are required to compensate the trainee at least 60% of the appropriate minimum journeyman's rate specified in the contract for the first half of the training period, 75% for the third quarter of the training period and 90% for the last quarter of the training period.

   Contractors will promptly notify pertinent project engineers of the trainee's work location in sufficient time to allow for observation or interviews.

   The program document is available through the TxDOT Office of Civil Rights Contract Compliance Section at 125 E. 11th Street, Austin, Texas 78701.

4. **Non-Compliance.** A contractor's failure to comply with the requirements of this Special Provision shall constitute a material breach of this contract. In such a case, the department reserves the right to terminate the contract, assess liquidated damages, or such other remedy or remedies as the department deems appropriate.

SPECIAL PROVISION

000---009

Certification of Nondiscrimination in Employment

By signing this proposal, the bidder certifies that he has participated in a previous contract or subcontract subject to the equal opportunity clause, as required by Executive Orders 10925, 11114, or 11246, or if he has not participated in a previous contract of this type, or if he has had previous contract or subcontracts and has not filed, he will file with the Joint Reporting Committee, the Director of the Office of Federal Contract Compliance, a Federal Government contracting or administering agency, or the former President's Committee on Equal Employment Opportunity, all reports due under the applicable filing requirements.

Note: The above certification is required by the Equal Employment Opportunity Regulations of the Secretary of Labor (41 CFR 60-1.7(b)(1)), and must be submitted by bidders and proposed subcontractors only in connection with contracts and subcontracts which are subject to the equal opportunity clause. Contracts and subcontracts which are exempt from the equal opportunity clause are set forth in 41 CFR 60-1.5. (Generally only contracts or subcontracts of $10,000 or under are exempt.)

Currently, Standard Form 100 (EEO-1) is the only report required by the Executive Orders or their implementing regulations.

Proposed prime contractors and subcontractors who have participated in a previous contract or subcontract subject to the Executive Orders and have not filed the required reports should note that 41 CFR 60-1.7(b)(1) prevents the award of contracts and subcontracts unless such contractor submits a report covering the delinquent period or such other period specified by the Federal Highway Administration or by the Director, Office of Federal Contract Compliance, U. S.
Department of Labor.

SPECIAL PROVISION

000---1966

Disadvantaged Business Enterprise in Federal-Aid Construction

Description. The purpose of this Special Provision is to carry out the U. S. Department of Transportation's (DOT) policy of ensuring nondiscrimination in the award and administration of DOT assisted contracts and creating a level playing field on which firms owned and controlled by individuals who are determined to be socially and economically disadvantaged can compete fairly for DOT assisted contracts. If the Disadvantaged Business Enterprise (DBE) goal is greater than zero, Article A, "Disadvantaged Business Enterprise in Federal-Aid Construction", of this Special Provision shall apply to this contract. If there is no DBE goal, Article B, "Race-Neutral DBE Participation", of this Special Provision shall apply to this contract. The percentage goal for DBE participation in the work to be performed under this contract will be shown on the proposal.

Article A. Disadvantaged Business Enterprise in Federal-Aid Construction.

1. **Policy.** It is the policy of the DOT and the Texas Department of Transportation (henceforth the "Department") that DBEs, as defined in 49 CFR Part 26, Subpart A and the Department's DBE Program, shall have the opportunity to participate in the performance of contracts financed in whole or in part with Federal funds. The DBE requirements of 49 CFR Part 26, and the Department's DBE Program, apply to this contract as follows:

   a. The prime contractor (Contractor) will solicit DBEs through reasonable and available means, as defined in 49 CFR Part 26, Appendix A and the approved DBE Program, or show a good faith effort to meet the DBE goal for this contract.

   b. The Contractor, sub-recipient or subcontractor shall not discriminate on the basis of race, color, national origin, or sex in the performance of this contract. The Contractor shall carry out applicable requirements of 49 CFR Part 26 in the award and administration of DOT financially assisted contracts. Failure by the Contractor to carry out these requirements is a material breach of this contract, which may result in the termination of this contract or such other remedy as the Entity deems appropriate subject to review by the Department.

   c. The requirements of this Special Provision shall be physically included in any subcontract.

   d. By signing the contract proposal, the Bidder is certifying that the DBE goal as stated in the proposal will be met by obtaining commitments from eligible DBEs or that the Bidder will provide acceptable evidence of good faith effort to meet the commitment. The Entity will determine the adequacy of a Contractor's efforts to meet the contract goal, within 10 business days, excluding national holidays, from receipt of the information outlined in this Special Provision under Article A.3, "Contractor's Responsibilities." If the requirements of Article A.3 are met, the conditional situation will be removed and the contract will be forwarded to the Contractor for execution.

2. **Definitions.**

   a. "Department" means the Texas Department of Transportation.

   b. "DOT" means the U.S. Department of Transportation, including the Office of the Secretary, and including the operating administrations, i.e. the Federal Highway Administration (FHWA), the Federal Transit Administration (FTA), and the Federal Aviation Administration (FAA).

   c. "Federal-Aid Contract" is any contract between the Texas Department of Transportation and a Contractor at any tier, or Entity and a Contractor at any tier which is paid for in whole or in part with DOT financial assistance.

   d. “Entity” means local government agency, MPO, RMA, etc.

   e. "DBE Joint Venture" means an association of a DBE firm and 1 or more other firm(s) to carry out a single business enterprise for profit for which purpose they combine

their property, capital, efforts, skills and knowledge, and in which the DBE is responsible for a distinct, clearly defined portion of the work of the contract and whose share in the capital contribution, control, management, risks, and profits of the joint venture are commensurate with its ownership interest.

f. "Disadvantaged Business Enterprise" or "DBE" means a firm certified through the Texas Unified Certification Program in accordance with 49 CFR Part 26 Subparts D and E.

g. "Good Faith Effort" means efforts to achieve a DBE goal or other requirement of 49 CFR Part 26 Subpart C and this Special Provision which, by their scope, intensity, and appropriateness to the objective, can reasonably be expected to fulfill the program requirement.

h. "Manufacturer" is a firm that operates or maintains a factory or establishment that produces, on the premises, the materials, supplies, articles, or equipment required under the contract and of the general character described by the specifications.

i. "Regular Dealer" is a firm that owns, operates, or maintains a store, warehouse, or other establishment in which the materials, supplies, articles or equipment of the general character described by the specifications and required under the contract are bought, kept in stock, and regularly sold or leased to the public in the usual course of business. To be a Regular Dealer, the firm must be an established, regular business that engages in, as its principal business and under its own name, the purchase and sale or lease of the products in question.

A Regular Dealer in such bulk items as steel, cement, gravel, stone, and petroleum products need not keep such products in stock if it owns and operates distribution equipment for the products. Any supplementing of Regular Dealer's own distribution equipment shall be by a long-term lease agreement and not on an ad hoc or contract-by-contract basis. *Brokers, packagers, manufacturers' representatives, or other persons who arrange or expedite transactions shall not be regarded as a Regular Dealer.

*****"Broker" is an intermediary or middleman that does not take possession of a commodity or act as a Regular Dealer selling to the public.

j. "Race-neutral DBE Participation" means any participation by a DBE through customary competitive procurement procedures.

k. "Race-conscious" means a measure or program that is focused specifically on assisting only DBEs, including women-owned DBEs.

l. "Texas Unified Certification Program" or "TUCP" provides one-stop shopping to applicants for certification in their region, such that applicants are required to apply only once for a DBE certification that will be honored by all recipients of federal funds in the state. The TUCP by Memorandum of Agreement established six member entities, including TxDOT, to serve as certifying agents for Texas in specified regions. Applicants for DBE certification may be directed to the TUCP internet site for more information at:

//www.txdot.gov/business/business_outreach/tucp.htm

3. Contractor's Responsibilities. These requirements must be satisfied by the Contractor.

a. After conditional award of the contract, the Contractor shall submit a completed Form No.SMS.4901, "DBE Commitment Agreement" for each DBE he/she intends to use to satisfy the DBE goal or a good faith effort to explain why the goal could not be reached, so as to arrive in the Entity's contracting office not later than 5:00 p.m. on the 10th business day, excluding national holidays, after the conditional award of the contract. When requested, additional time, not to exceed seven (7) business days, excluding national holidays, may be granted based on documentation submitted by the Contractor. The Entity shall submit the DBE Commitment Agreement package to the Department's Office of Civil Rights in Austin, Texas not later than 5:00 p.m. on the 30th business day, excluding national holidays, after the conditional award of the

contract. The DBE Commitment Agreement package is subject to review, comment and approval by TxDOT prior to and as a condition of execution of the contract.

b. DBE prime contractors who subcontract with DBEs may receive credit toward the DBE goal for work performed by the DBE's own forces and work subcontracted to DBEs. A Contractor must make a good faith effort to meet the goals. In the event a DBE prime subcontracts to a non-DBE, that information must be reported on Form No. SMS.4902. The completed form is provided to the Entity with a copy to the TxDOT District Office responsible for overseeing the project.

c. A Contractor who cannot meet the contract goal, in whole or in part, shall make adequate good faith efforts to obtain DBE participation as so stated and defined in 49 CFR Part 26, Appendix A. The following is a list of the types of action that may be considered as good faith efforts. It is not intended to be a mandatory checklist, nor is it intended to be exclusive or exhaustive. Other factors or types of efforts may be relevant in appropriate cases.

- Soliciting through all reasonable and available means (e.g. attendance at pre-bid meetings, advertising, and/or written notices) the interest of all certified DBEs who have the capability to perform the work of the contract. The solicitation must be done within sufficient time to allow the DBEs to respond to it. Appropriate steps must be taken to follow up initial solicitations to determine, with certainty, if the DBEs are interested.
- Selecting portions of the work to be performed by DBEs in order to increase the likelihood that the DBE goals will be achieved. This includes, where appropriate, breaking out contract work items into economically feasible units to facilitate DBE participation, even when the Contractor might otherwise prefer to perform the work items with its own forces.
- Providing interested DBEs with adequate information about the plans, specifications, and requirements of the contract in a timely manner to assist them in responding to a solicitation.
- Negotiating in good faith with interested DBEs to make a portion of the work available to DBE subcontractors and suppliers and select those portions of the work or material needs consistent with the available DBE subcontractors and suppliers, so as to facilitate DBE participation. Evidence of such negotiations includes the names, addresses, and telephone numbers of DBEs that were considered; a description of the information provided regarding the plans and specifications for the work selected for subcontracting; and evidence as to why additional agreements could not be reached for DBEs to perform the work.
- A Bidder using good business judgment would consider a number of factors in negotiating with subcontractors, including DBE subcontractors, and would take a firm price and capabilities as well as contract goals into consideration. However, the fact that there may be some additional cost involved in finding and using DBEs is not in itself sufficient reason for a Bidders failure to meet the Contract DBE goal as long as such cost are reasonable. Also, the ability or desire of the Contractor to perform the work of the contract with its own organization does not relieve the Bidder of the responsibility to make good faith effort. Contractors are not, however, required to accept higher quotes from DBEs if the price difference is excessive or unreasonable.
- Not rejecting DBEs as being unqualified without sound reasons based on a thorough investigation of their capabilities. The Contractor's standing within its industry, membership in specific groups, organizations, or associations and political or social affiliations (for example union vs. nonunion employee status) are not legitimate cause for the rejection or non-solicitation of bids and the Contractors efforts to meet the project goal.
- Making efforts to assist interested DBEs in obtaining bonding, lines of credit, or insurance as required by the recipient or Contractor.

- Making efforts to assist interested DBEs in obtaining necessary equipment, supplies, materials, or related assistance or services.
- Effectively using the services of available minority/women community organizations; minority/women Contractors' groups; local, state, and Federal minority/women business assistance offices; and other organizations as allowed on a case-by-case basis to provide assistance in the recruitment and placement of DBEs.
- If the Entity determines that the Contractor has failed to meet the good faith effort requirements, the Contractor will be given an opportunity for reconsideration by the TxDOT District Office responsible for overseeing the project. Opportunity for further appeals will be addressed by the TxDOT Office of Civil Rights.

d. Should the Bidder to whom the contract is conditionally awarded refuse, neglect or fail to meet the DBE goal or comply with good faith effort requirements, the Entity can take remedial financial action as provided by the Entity's/Department's rules or practices or reference to 43 TAC §9.56, as a guideline when the Entity does not have uniform rules or practices for non-compliance with the terms of its contracts.

All contract and project information shall be submitted directly to the Entity and with a copy to the TxDOT District or Office responsible to oversee the project.

e. The Contractor shall not terminate for convenience a DBE subcontractor named in the commitment submitted under Article A.3.a. of this Special Provision. Prior to terminating or removing a DBE subcontractor named in the commitment, the Contractor shall make a good faith effort to replace a DBE subcontractor that is unable to perform successfully with another DBE to the extent needed to meet the contract goal. The Contractor shall submit a completed Form No.4901, "DBE Commitment Agreement," and Form No. 2228 "Disadvantaged Business Enterprise (DBE) Request for Substitution for the substitute DBE firm(s). Any substitution of DBEs shall be subject to approval by the Entity. Prior to approving the substitution, the Entity will request a statement from the DBE about the circumstances of its subcontract's termination. The contractor must have a written consent prior to substitution. A copy of all documentation shall be provided to the TxDOT District Office responsible to oversee the project.

f. The Contractor shall designate a DBE liaison officer who will administer the Contractor's DBE program and who will be responsible for maintenance of records, reports, efforts and contacts made to subcontract with DBEs.

g. Contractors are encouraged to investigate the services offered by banks owned and controlled by disadvantaged individuals and to make use of these banks where feasible.

4. Eligibility of DBEs.

a. The member entities of the TUCP certify the eligibility of DBEs and DBE joint ventures to perform DBE subcontract work on DOT financially assisted contracts.

b. The Department maintains the Texas Unified Certification Program DBE Directory containing the names of firms that have been certified to be eligible to participate as DBE's on DOT financially assisted contracts. This Directory is available from the Department's OCR. An update of the Directory can be found on the Internet at

http://www.dot.state.tx.us/business/tucpinfo.htm.

c. Only DBE firms certified at the time commitments are submitted are eligible to be used in the information furnished by the Contractor as required under Article A.3.a. and 3.g. above. For purposes of the DBE goal on this project. DBEs will only be allowed to perform work in the categories of work for which they are certified.

d. Only DBE firms certified at the time of execution of a contract, subcontract, or purchase order are eligible for DBE goal participation.

5. **Determination of DBE Participation.** When a DBE participates in a contract, only the values of the work actually performed by the DBE, as referenced below, shall be counted by the Contractor toward DBE goals:

   a. The total amount paid to the DBE for work performed with the DBE's own forces is counted toward the DBE goal. When a DBE subcontracts part of the work of its contract to another firm, the value of the subcontracted work may be counted toward DBE goals only if the subcontractor is itself a DBE. Work that a DBE subcontracts to a non-DBE firm does not count toward DBE goals.

   b. A Contractor may count toward its DBE goal a portion of the total value of the contract amount paid to a DBE joint venture equal to the distinct, clearly defined portion of the work of the contract performed by the DBE.

   (1) A Contractor may count toward its DBE goal only expenditures to DBEs that perform a commercially useful function (CUF) in the work of a contract or purchase order. A DBE is considered to perform a CUF when it is responsible for execution of the work of the contract and is carrying out its responsibilities by actually performing, managing, and supervising the work involved. To perform a CUF, the DBE must also be responsible, with respect to materials and supplies used on the contract, for negotiating price, determining quality and quantity, ordering the material, and installing (where applicable) and paying for the material itself.

   A minimum of one CUF Project Site Review (CUFPSR) will be conducted by the Entity using Department Form 2182 on all DBE firms working on the project.

   In accordance with 49 CFR Part 26, Appendix A. guidance concerning Good Faith Efforts, Contractors may make efforts to assist interested DBEs in obtaining necessary equipment, supplies, materials, or related assistance or services. Contractors may not however, negotiate the price of materials or supplies used on the contract by the DBE, nor may they determine quality and quantity, order the materials themselves, nor install the materials (if applicable), or pay for the material themselves. Contractors however, may share the quotations they receive from the material supplier with the DBE firm, so that the DBE firm may negotiate a reasonable price with the material supplier.

   In all cases, Contractor or other non-DBE subcontractor assistance will not be credited toward the DBE goal.

   (2) A DBE does not perform a CUF if its role is limited to that of an extra participant in a transaction, contract, or project through which funds are passed in order to obtain the appearance of DBE participation.

   Consistent with industry practices and the DOT/Department's DBE program, a DBE subcontractor may enter into second-tier subcontracts, amounting up to seventy percent (70%) of their contract. Work subcontracted to a non-DBE does not count towards DBE goals. If a DBE does not perform or exercise responsibility for at least thirty percent (30%) of the total cost of its contract with its own work force, or the DBE subcontracts a greater portion of the work of a contract than would be expected on the basis of normal industry practice for the type of work involved, it will be presumed that the DBE is not performing a CUF.

   (3) A DBE trucking firm who is certified as a DBE is considered to be performing a CUF when the DBE is responsible for the management and supervision of the entire trucking operation on a particular contract and the DBE itself owns and operates at least one (1) fully licensed, insured, and operational truck used on the contract.

   (a) The entity shall verify ownership of all trucks prior to commencement of work of the DBE trucking firm.

   (b) The Contractor receives credit for the total value of the transportation services the DBE provides on a contract using trucks it owns, insures, and operates with drivers it employs.

(c) The DBE may lease trucks from another DBE firm, including an owner operator who is certified as a DBE. The DBE who leases trucks from another DBE receives credit for the total value of the transportation services the lessee DBE provides on the Contract.

(d) The DBE may also lease trucks from a non-DBE firm, including from an owner-operator. The DBE who leases trucks from a non-DBE is entitled to credit for the total value of transportation services provided by non-DBE lessees not to exceed the value of transportation services provided by the DBE-owned trucks on its sub-contract. Additional participation by non-DBEs receive credit only for the fee or commission it receives as result of the lease arrangement.

(e) A lease must indicate that the DBE has exclusive use of and control over the trucks giving the DBE absolute priority for use of the leased trucks. Leased trucks must display the name and identification number of the DBE.

(f) The DBE Trucking Firm shall submit Form 2371, "Trucking Credit Worksheet", within 10 calendar days of the end of the month to the Prime Contractor. The prime shall submit a copy of Form 2371 with the DBE Monthly Progress Report.

(4) When a DBE is presumed not to be performing a CUF the TxDOT District Office responsible to oversee the project will be notified. The DBE may present evidence to rebut this presumption.

c. A Contractor may count toward its DBE goals expenditures for materials and supplies obtained from a DBE manufacturer, provided that the DBE assumes the actual and contractual responsibility for the materials and supplies. Count expenditures with DBEs for materials or supplies toward DBE goals as provided in the following:

(1) If the materials or supplies are obtained from a DBE manufacturer, count 100% of the cost of the materials or supplies toward DBE goals. (The definition of a DBE manufacturer is found at Article A.2.h. of this Special Provision.)

(2) If the materials or supplies are purchased from a DBE Regular Dealer, count 60% of the cost of the materials or supplies toward DBE goals. (The definition of a DBE Regular Dealer is found at Article A.2.i. of this Special Provision.)

(3) With respect to materials or supplies purchased from DBE which is neither a manufacturer nor a Regular Dealer, count the entire amount of fees or commissions charged for assistance in the procurement of the materials and supplies, or fees or transportation charges for the delivery of materials or supplies required on a job site, toward DBE goals, provided you determine the fees to be reasonable and not excessive as compared with fees customarily allowed for similar services. Do not count any portion of the cost of the materials and supplies themselves toward DBE goals.

(4) Count the entire amount of fees or commissions charged by a DBE firm for providing a bona fide service, such as professional, technical, consultant or managerial services, or for providing bonds or insurance specifically required for the performance of a DOT financially assisted contract, toward DBE goals, provided you determine the fee to be reasonable and not excessive as compared with fees customarily allowed for similar services.

d. Should the DBE firm request assistance in the form of a joint check and the contractor chooses to assist the DBE firm, other than a manufacturing material supplier or Regular Dealer, the Contractor may act solely as a guarantor by use of a two-party check for payment of materials to be used on the project by the DBE. The material supplier must invoice the DBE who will present the invoice to the Contractor. The Contractor may issue a joint check to the DBE and the material supplier and the DBE firm must issue the remittance to the material supplier. No funds shall go directly from the Contractor to the material supplier. The DBE firm may accept or reject this joint checking arrangement.

The Contractor must obtain approval from the Entity, prior to implementing the use of joint check arrangements with the DBE. The Contractor shall submit to the Entity, Joint Check Approval Form 2178 and provide copies of cancelled joint checks to the Entity upon request if the joint check arrangement is approved. No DBE goal credit will be allowed for the cost of DBE materials that are paid by the Contractor directly to the material supplier. A copy of the completed form is to be provided to the TxDOT District Office responsible for overseeing the project.

e. No DBE goal credit will be allowed for supplies and equipment the DBE subcontractor leases from the contractor or its affiliates.

f. No DBE goal credit will be allowed for the period of time determined by the Entity that the DBE was not performing a CUF. The denial period of time may occur before or after a determination has been made by the Entity. In case of the denial of credit for non-performance of a CUF of a DBE, the Contractor will be required to provide a substitute DBE to meet the contract goal or provide an adequate good faith effort when applicable and as required under Article A.3.e.

6. Records and Reports.

a. The Contractor shall submit monthly reports, after work begins, on DBE payments to meet the DBE goal and for DBE race-neutral participation. Report payments made to non-DBE firms. The monthly report is to be sent to the Entity with a copy to the TxDOT District Office responsible to oversee the project. These reports will be due within fifteen (15) days after the end of a calendar month. These reports will be required until all DBE subcontracting or material supply activity is completed. Form No. SMS.4903, DBE Progress Report, is to be used for monthly reporting. Form No. SMS.4904, DBE Final Report, is to be used as a final summary of DBE payments submitted upon completion of the project. The original final report must be submitted to the Entity with copies to the TxDOT District Office responsible for overseeing the project and to the TxDOT Office of Civil Rights. These forms may be obtained from the Department or may be reproduced by the Contractor. The Entity may verify the amounts being reported as paid to DBEs by requesting copies of cancelled checks paid to DBEs on a random basis. Cancelled checks and invoices should reference the Entity's or Department's project number, as applicable.

b. DBE subcontractors and/or material suppliers should be identified on the monthly report by Vendor Number, name, and the amount of actual payment made to each during the monthly period. Negative reports are required when no activity has occurred in a monthly period.

c. All such records must be retained by the Contractor and the Entity for a minimum of four (4) years following completion of the contract work, and shall be available at reasonable times and places for inspection by authorized representatives of the Department or the DOT operating administration.

d. Prior to receiving final payment, the Contractor shall submit Form No. SMS.4904. DBE Final Report. If the DBE goal requirement is not met, documentation supporting Good Faith Efforts, as outlined in Article A.3.c. of this Special Provision, must be submitted with the DBE Final Report. A copy of the completed form is provided to the TxDOT District Office responsible for overseeing the project.

7. Compliance of Contractor.

a. To ensure that DBE requirements of this DOT financially assisted contract are complied with, the Entity will monitor the Contractor's efforts to involve DBEs during the performance of this contract. This will be accomplished by a review by the Entity of monthly reports submitted to the Entity by the Contractor indicating his progress in achieving the DBE contract goal and by compliance reviews conducted on the project site by the Entity and by the Department, as needed.

b. The Contractor shall receive credit toward the DBE goal based on actual payments to the DBE subcontractor. The Contractor shall notify the Entity if it withholds or reduces payment to any DBE subcontractor. The Contractor shall submit an affidavit

detailing the DBE subcontract payments prior to receiving final payment for the contract. Copies of these documents will be provided to the Entity and to the TxDOT District Office responsible for overseeing the project.

c. Contractors' requests for substitutions of DBE subcontractors shall be accompanied by a detailed explanation which should substantiate the need for a substitution. The Contractor may not be allowed to count work on those items being substituted toward the DBE goal prior to approval of the substitution from the Entity.

d. The Contractor is prohibited from providing work crews and equipment to DBEs. DBE Goal credit for the DBE subcontractors leasing of equipment or purchasing of supplies and/or materials from the Contractor or its affiliates is not allowed.

e. When a DBE subcontractor, named in the commitment under Article A.3.a. of this Special Provision, is terminated or fails to complete its work on the contract for any reason, the Contractor is required to make good faith efforts to find another DBE subcontractor to substitute for the original DBE. These good faith efforts shall be directed at finding another DBE to perform at least the same amount of work under the contract as the DBE that was terminated, to the extent needed to meet the contract goal.

f. A Contractor's failure to comply with the requirements of this Special Provision shall constitute a material breach of the contract. In such a case, the Entity or the Department, as appropriate, reserves the right to terminate the contract; to deduct the amount of DBE goal not accomplished by DBEs from the money due or to become due the Contractor, or such other remedy or remedies as the Entity deems appropriate, subject to review by the Department.

Article B. Race-Neutral Disadvantaged Business Enterprise Participation.

1. Policy. It is the policy of the DOT that Disadvantaged Business Enterprises (DBE), as defined in 49 CFR Part 26 Subpart A, be given the opportunity to compete fairly for contracts and subcontracts financed in whole or in part with Federal funds and that a maximum feasible portion of the Department's overall DBE goal be met using race-neutral means.

a. If there is no DBE goal, the DBE requirements of 49 CFR Part 26, apply to this contract as follows:

The Contractor will offer DBEs as defined in 49 CFR Part 26, Subpart A, the opportunity to compete fairly for contracts and subcontractors financed in whole or in part with Federal funds.

b. The Contractor, subrecipient or subcontractor shall not discriminate on the basis of race, color, national origin, or sex in the performance of this contract. The Contractor shall carry out applicable requirements of 49 CFR Part 26 in the award and administration of DOT financially assisted contracts. Failure by the Contractor to carry out these requirements is a material breach of this contract, which may result in the termination of this contract or such other remedy as the Entity deems appropriate, subject to review by the Department.

2. Reports. Race-Neutral DBE participation on projects with no DBE goal shall be reported on Form No. SMS.4903, DBE Progress Report and submitted to the Entity each month and at project completion. Copies of payment documents should be sent to the TxDOT District Office responsible for project oversight. Payments to DBE firms are reported on Form No. SMS.4903 and are subject to the requirements of Article A.5, "Determination of DBE Participation."

SPECIAL PROVISION
001---004
Definition of Terms

For this project, Item 001, "Definition of Terms," of the Standard Specifications, is hereby amended with respect to the clauses cited below, and no other clauses or requirements of this Item are waived or changed hereby.

This Item is supplemented by the following:

1.148. Additive Alternate. A bid item contained in a proposal that is not a regular item or a designated alternate bid item. The additive alternate item(s) include work that may be added to the base bid work.

1.149. Base Bid. The total bid (includes regular bid items or corresponding alternate bid items if lower) amount without additive alternates.

SPECIAL PROVISION
002---007
Instructions to Bidders

For this project, Item 002, "Instruction to Bidders," of the Standard Specifications, is hereby amended with respect to the clauses cited below, and no other clauses or requirements of this Item are waived or changed hereby.

Article 2.6. Preparing the Proposal. The first paragraph is voided and replaced by the following:

Submit the proposal on the form furnished by the Department. Make entries in ink. Specify a unit price in dollars and cents for each Item for which an estimated quantity is given. When "Working Days" is an Item, submit the number of working days to be used to complete the Contract, or phases of the Contract shown on the plans. Include unit bid prices for each Item in the Item group or alternate Item group, except for instances when alternate Items pertain to foreign steel or iron materials. Include unit bid prices for all additive alternate Items. An Item left blank will constitute an incomplete bid and will be handled as prescribed in Article 2.14, "Tabulating Bids."

Article 2.14. Tabulating Bids, Section E., Consideration of Unit Prices. The second and third paragraphs are voided and replaced by the following:

The Department will consider proposals where unit bid prices have been left blank incomplete and nonresponsive. The proposal will be considered complete if:

- all regular Items without corresponding alternate Items have a unit price entered, and
- the regular Items or group of regular Items with corresponding alternate Items have unit prices entered, or all the corresponding alternate Items or group of alternate Items have unit prices entered, and
- all additive alternate Items have a unit price entered.

The bid will be considered incomplete and nonresponsive if:

- a regular Item without a corresponding alternate Item is left blank, or
- a regular Item or group of regular Items is left blank, and a corresponding alternate Item or group of alternate Items is left blank, or
- an additive alternate Item is left blank.

Article 2.14. Tabulating Bids, Section F., Consideration of Alternate Items is supplemented by the following:

Note: This section does apply to additive alternates.

Article 2.14. Tabulating Bids, Section G., Special Item Considerations is supplemented by the following.

4. Additive Alternates. The total bid amount used for determining the apparent low bidder will be total of the base bid items, unless otherwise shown on the plans.

SPECIAL PROVISION
003---024
Award and Execution of Contract

For this project, Item 003, "Award and Execution of Contract," of the Standard Specifications, is hereby amended with respect to the clauses cited below, and no other clauses or requirements of this Item are waived or changed hereby.

Article 3.8. Beginning of Work is supplemented by the following:

For projects with additive alternates, the work order will identify base bid work and additive alternate work the Department specifies to be performed. The Department makes no guarantees that additive alternate work will be required. The additive alternate work not required is not a basis for claim.

SPECIAL PROVISION
Differing Site Conditions

Reference 23 CFR 635.109. During the progress of the work, differing subsurface or latent physical conditions may be encountered at the site. The two types of differing site conditions are defined as:

- those that differ materially from those indicated in the Contract and
- unknown physical conditions of an unusual nature differing materially from those ordinarily encountered and generally recognized as inherent in the work provided for in the Contract.

Notify the Engineer in writing when differing site conditions are encountered. The Engineer will notify the Contractor when the OWNER discovers differing site conditions. Unless directed otherwise, suspend work on the affected items and leave the site undisturbed. The Engineer will investigate the conditions and determine whether differing site conditions exist. If the differing site conditions cause an increase or decrease in the cost or number of working days specified for the performance of the Contract, the Engineer will make adjustments, excluding the loss of anticipated profits, in accordance with the Contract. Additional compensation will be made only if the required written notice has been provided.

SPECIAL PROVISION
Prison Produced Materials

Reference 23 CFR 635.417. There are limitations on using materials produced by convict labor in a Federal-aid Highway project. Materials produced after July 1, 1991 by convict labor may only be incorporated in a Federal-aid highway construction project if:

- Such materials have been produced by convicts who are on parole, supervised release, or probation from a prison; or

- Such material has been produced in a qualified prison facility (e.g. prison industry, with the amount produced during any 12-month period) for use in Federal-aid projects, not exceeding the amount produced, for such use, during the 12-month period ending July 1, 1987. Texas does not have a qualified prison facility meeting the requirements of the regulation.

END

SECTION 00100 – INSTRUCTIONS TO BIDDERS

2. Estimates of Quantities (Unit Price Contracts Only)

Delete paragraph and replace with the following:

"The estimated quantities of the line item components of the Work set forth in Bid Form Section 00300U-IDIQ are included solely for the purpose of providing a reasonable basis for the calculation of bid amounts based upon the unit prices bid. The actual quantities of Work under the Contract will vary from the estimated quantities set forth above and will be dependent upon the scope of Work for each Work Assignment. There is no representation or guarantee of any set amount of any Bid item. Payment to CONTRACTOR will only be made for actual quantities of Work performed or materials furnished in accordance with each Work Assignment. It is agreed and understood that quantities may be increased or decreased as required by subsequently issued Work Assignments and as provided in Section 00700, General Conditions, and as may be modified by Section 00810-IDIQ, Supplemental General Conditions."

12. Award and Execution of Contract

Add as the third sentence of first paragraph:

"The initial Contract Amount will not exceed one million dollars ($1,000,000) for the initial Contract Term and one million dollars ($1,000,000) for each extension option for a total potential Contract Amount not to exceed four million dollars ($4,000,000), which may be increased subject to the availability of funding and further approval of the Austin City Council."

END

I. Payment

A. Classification Definitions, Building and Heavy and Highway

Definitions for Building Construction and Heavy and Highway classifications shall conform to the current "Dictionary of Occupational Titles" as published by the U.S. Department of Labor.

B. Minimum Wages

Workers on Project shall be paid not less than wage rates, including fringe benefits, as published by the Department of Labor (DOL) or the $13.03 minimum wage required by City of Austin Ordinance No. 20160324-015, whichever is higher. The Total Minimum Wage required can be met using any combination of cash and non-cash qualified fringe benefits provided the cash component meets or exceeds the $13.03 minimum wage required.

Such wage rates shall be used throughout the Contract. If a classification is to be used, which is not listed in the attached wage rates, CONTRACTOR shall submit to OWNER rates and classification proposed for use, for approval, **prior** to performance of the Work.

All laborers and mechanics working upon the Work for this Project shall be paid unconditionally and without subsequent deduction or rebate on any account (except such payroll deductions as are permitted by regulations issued by Secretary of Labor under the Copeland Act, Title 29 CFR, Part 3) full wages accrued and when due, computed at rates not less than wage rates bound herein pertaining to type of Work being performed. When Work is of such a nature that both Building and Heavy and Highway wage scales are incorporated into contract, CONTRACTOR shall pay wage rates to mechanics or laborers performing Work in more than one classification at the rate indicated for each classification for time actually worked as determined by area practice applicable to type (Site Construction Crafts or Building Construction Crafts) of Work being performed without regards to skill. Salaried specialists (project superintendent and administrative personnel only) in the permanent employment of CONTRACTOR do not fall under any Wage Classification. A supervisor/foreman who is not exempt under 29CFR Part 541 and who spends more than a substantial amount of time (20 percent) in a given workweek as a laborer or mechanic must be paid the applicable Wage Rate for the classification of work performed for all hours engaged in such work as a laborer or mechanic.

Wage rates shall be posted by CONTRACTOR at site(s) of Work in prominent, easily accessible places where they can be seen by all workers. The following shall also be posted by the CONTRACTOR: City of Austin wage contact posters (English and Spanish), City of Austin Equal Employment Opportunity posters (English and Spanish), Workers' Compensation Notice (English and Spanish), Texas Payday Law (English and Spanish), City Rest Break Ordinance (English

and Spanish), City of Austin Non-Discrimination Statement (related to Title VI of the Civil Rights Act), and Federal Notices, as appropriate.

C. Overtime Requirements

No CONTRACTOR, Subcontractor, or Sub-subcontractor contracting for any part of contract Work which may require or involve the employment of laborers or mechanics shall require or permit any laborer or mechanic in any workweek in which he is employed on such Work, to work in excess of forty hours in such workweek unless such laborer or mechanic receives compensation at a rate not less than one and one-half times their basic rate of pay for all hours in excess of forty hours in such workweek.

Overtime wages must be calculated using the Adjusted Wage Rate specified in the Wage Rate Determination or the actual basic rate of pay, whichever is higher.

II. Apprentices

Locally & Federally Funded Projects

The terms journeyman and apprentice apply to both union and independent workers, and are not intended to imply that these positions are union workers only.

Apprentices and Trainees will be permitted to work as such only when they are registered, individually, under a bonafide Apprenticeship or Trainee program registered with the Bureau of Apprenticeship and Training, United States Department of Labor. The allowable ratio of Apprentices or Trainees to journeymen in any craft classification shall not be greater than the ratio permitted to CONTRACTOR as stated in the registered apprenticeship program standards. Any employee listed on a payroll at an Apprentice or Trainee wage rate, who is not registered as above, shall be paid the wage rate provided in Contract for Work employee actually performed. CONTRACTOR, Subcontractor, or Sub-subcontractor shall furnish to OWNER written evidence of registration of his program for Apprentices and Trainees as well as of the appropriate ratios and wage rates, for the area of construction **prior** to using any Apprentices or Trainees on this Contract.

III. Withholding of Payments

OWNER may withhold or cause to be withheld from CONTRACTOR as much of the accrued payments as necessary to pay laborers and mechanics employed by CONTRACTOR, Subcontractors, or Sub-subcontractors the amount of wages required to comply with the Contract. In the event of nonpayment of wages to laborers or mechanics working on the site of the Work of this Contract, OWNER may, after Written Notice to CONTRACTOR, take such action as may be necessary to cause suspension of any further payments or advance of funds to CONTRACTOR until such violations have ceased and until restitution has been made. Payments may also be withheld if CONTRACTOR fails to maintain weekly payroll reports or fails to provide copies in a timely manner upon request of Owner.

IV. Payrolls

A. CONTRACTOR shall keep records showing:

1. the name, address and occupation of each worker employed by the CONTRACTOR or subcontractor(s) in the construction of the public work.

2. the actual per diem wages paid to each worker.

3. Employee Certification. CONTRACTOR, all levels of Subcontractors shall identify in writing, the classification agreed to by all laborers and mechanics employed by them in the execution of the Contract, and pay not less than rates specified in the attached Wage Rate Determination(s). Contractor shall prepare a completed form for the signature of Employee and a witness shall sign the form in the presence of Employee. If work performed by worker is different than the trade classification agreed upon, the worker shall be paid for that work no less than the minimum prevailing wage for that specified trade.

4. Payroll Deduction Authorization Form. CONTRACTOR, Subcontractor, and Subsubcontractor shall prepare for employee signature a payroll deduction authorization form to identify all payroll deductions excluding those required by statute, such as federal income taxes, medicare and social security.

B. The record shall be open at all reasonable hours to inspection by the officers and agents of the Owner as requested. CONTRACTOR will be responsible to provide copies of records as requested by the Owner within two (2) working days. Payrolls relating to this Work shall be maintained during term of Contract and preserved for a period of three (3) years thereafter by CONTRACTOR for all laborers and mechanics working on the Work.

C. A Statement of Compliance, a letter signed and dated by party responsible for supervising the payment of persons employed by CONTRACTOR or subcontractor shall accompany payrolls required by Owner. The Statement of Compliance letter shall identify but is not limited to:

1. name of signatory party and title,
2. name of project, payroll period and
3. name of CONTRACTOR or Subcontractor.

The signed letter attests that the payroll complies with 29CFR issued by the Secretary of Labor.

D. Federal Funding

In the event that federal funding is used:

1. Contractor and all levels of Subcontractors shall submit weekly certified payroll reports and signed wage compliance statements to the Owner's designated office no later than seven (7) calendar days after the scheduled payday.

2. Contractors and all levels of Subcontractors shall pay all "mechanics and laborers" not less often than once per week, for work performed the previous week.

3. Submit to the Owner's designated office Standard Form 1413, Statement and Acknowledgement, from each subcontractor prior to the subcontractor performing work on the project.

V. Noncompliance

According to Chapter 2258 Texas Government Code Title 10A, a CONTRACTOR or subcontractor(s) who violates this section shall pay to the political subdivision on whose behalf the contract is made, $60 for each worker employed for each calendar day or part of the day that the worker is paid less than the wage rates stipulated in the contract. A public body shall use any money collected under this section to offset the costs incurred in the administration of this chapter.

Confirmed Disciplinary action taken by CONTRACTOR against employees who provide information during an interview or investigation by the Owner on wages received, may result in suspension or debarment from consideration of award of City contracts.

VI. Area Practice

A. Heavy and Highway Construction Rates shall be used on this Project, unless the Project consists primarily of Building Construction and Building Construction Rates are to be used.

1. Building Construction consists generally of all aspects of construction of buildings, which are sheltered enclosures with walk-in access for the purpose of housing persons, machinery, equipment or supplies, including without limitation the installation of utilities and equipment, both above and below grade level, as well as incidental demolition, grading, utilities, paving and other site work. Buildings need not be "habitable" to be classified as Building Construction and the installation of heavy machinery and/or equipment will not generally change a Building Construction project's classification.

2. The determination of Building Construction Wage Rates includes all construction trades and work necessary to complete a building, regardless of the number of contracts involved, so long as all such contracts are closely related in purpose, time and place.

B. For projects that involve both Building Construction and Heavy and Highway trades, the following classifications shall be used:

1. A multiple classification shall be used if Building Construction items are more than 20% of the Heavy and Highway project cost.

2. A multiple classification shall be used if Heavy and Highway Construction items are more than 20% of the Building Construction Project cost.

C. Split classifications/multiple wage rate schedules: When construction work requires that an employee perform work under multiple classifications or multiple wage scales, the employer must pay that worker (at least) the

highest prevailing wage or the employer payroll records must accurately set forth the times spent performing the work of each classification and under each scale. For those projects that involve both Building Construction and Heavy and Highway trades, the Heavy and Highway wage rates may only be applied to workers when engaged in site work at least five (5) feet beyond the building.

VII. Texas Open Records Act

Unless covered by an exception to mandatory disclosure under the Texas Public Information Act, Chapter 552, Texas Government Code, any and all documents submitted to the City of Austin become Public Records and are, therefore, subject to public disclosure.

Wage Rates For This Project Are Attached

End

WAGE RATE DETERMINATION

HEAVY AND HIGHWAY CONSTRUCTION

COUNTY NAME: TRAVIS

Wages based on DOL General Decision:TX160016 1/8/2016 TX16 and City of Austin Ordinance #20160324-015

DOL Rate column is for information only. The Total Minimum Wage Rate is derived from the Adjusted Wage Rate Required pursuant to City Ordinance, and can be met using any combination of cash and non-cash qualified fringe benefits, provided the cash component is at least $13.03/hour.

CLASSIFICATION	DOL RATE for info only	ADJUSTED WAGE RATE REQUIRED pursuant to City Ordinance	TOTAL MINIMUM WAGE RATE REQUIRED
Agricultural Tractor Operator	$ 12.69	$ 13.03	$ 13.03
Asphalt Distributor Operator	$ 15.55	$ 15.55	$ 15.55
Asphalt Paving Machine Operator	$ 14.36	$ 14.36	$ 14.36
Asphalt Raker	$ 12.12	$ 13.03	$ 13.03
Boom Truck Operator	$ 18.36	$ 18.36	$ 18.36
Broom or Sweeper Operator	$ 11.04	$ 13.03	$ 13.03
Cement Mason/Concrete Finisher	$ 12.56	$ 13.03	$ 13.03
Concrete Pavement Finishing Machine Operator	$ 15.48	$ 15.48	$ 15.48
Crane, Hydraulic, 80 tons or less	$ 18.36	$ 18.36	$ 18.36
Crane, Lattice Boom, 80 tons or less	$ 15.87	$ 15.87	$ 15.87
Crane, Lattice Boom, over 80 tons	$ 19.38	$ 19.38	$ 19.38
Crawler Tractor	$ 15.67	$ 15.67	$ 15.67
Directional Drilling Locator	$ 11.67	$ 13.03	$ 13.03
Directional Drilling Operator	$ 17.24	$ 17.24	$ 17.24
Electrician	$ 26.35	$ 26.35	$ 26.35
Excavator 50,000 lbs. or less	$ 12.88	$ 13.03	$ 13.03
Excavator, over 50,000 lbs.	$ 17.71	$ 17.71	$ 17.71
Flagger	$ 10.15	$ 13.03	$ 13.03
Form Builder/Form Setter - Paving & Curb	$ 12.94	$ 13.03	$ 13.03
Form Builder/Form Setter - Structures	$ 12.87	$ 13.03	$ 13.03
Foundation Drill Operator, Truck Mounted	$ 16.93	$ 16.93	$ 16.93
Front End Loader Operator, 3CY or less	$ 13.04	$ 13.04	$ 13.04
Front End Loader, over 3CY	$ 13.21	$ 13.21	$ 13.21
Laborer, Common	$ 10.50	$ 13.03	$ 13.03
Laborer, Utility	$ 12.27	$ 13.03	$ 13.03
Loader/Backhoe Operator	$ 14.12	$ 14.12	$ 14.12
Mechanic	$ 17.10	$ 17.10	$ 17.10
Milling Machine	$ 14.18	$ 14.18	$ 14.18
Motor Grader Operator - Fine Grade	$ 18.51	$ 18.51	$ 18.51
Motor Grader Operator, Rough	$ 14.63	$ 14.63	$ 14.63

Painter - Structures	$ 18.34	$ 18.34	$ 18.34
Pavement Marking Machine Operator	$ 19.17	$ 19.17	$ 19.17
Pipelayer	$ 12.79	$ 13.03	$ 13.03
Reclaimer/Pulverizer	$ 12.88	$ 13.03	$ 13.03
Reinforcing Steel Setter	$ 14.00	$ 14.00	$ 14.00
Roller Operator, Asphalt	$ 12.78	$ 13.03	$ 13.03
Roller Operator, Other	$ 10.50	$ 13.03	$ 13.03
Scraper Operator	$ 12.27	$ 13.03	$ 13.03
Servicer	$ 14.51	$ 14.51	$ 14.51
Spreader Box Operator	$ 14.04	$ 14.04	$ 14.04
Structural Steel Worker	$ 19.29	$ 19.29	$ 19.29
Traffic Signal Installer/Light Pole Worker	$ 16.00	$ 16.00	$ 16.00
Trenching Machine Operator, Heavy	$ 18.48	$ 18.48	$ 18.48
Truck Drick Tandem Axle Semi-Trailer	$ 12.81	$ 13.03	$ 13.03
Truck Driver, Lowboy/Float	$ 15.66	$ 15.66	$ 15.66
Truck Driver, Single Axle	$ 11.79	$ 13.03	$ 13.03
Truck Driver, Off Road Hauler	$ 11.88	$ 13.03	$ 13.03
Truck Driver, Single or Tandem Axle Dump Truck	$ 11.68	$ 13.03	$ 13.03
Welder	$ 15.97	$ 15.97	$ 15.97
Work Zone Barricade Servicer	$ 11.85	$ 13.03	$ 13.03

http://www.wdol.gov/wdol/scafiles/davisbacon/tx.html

The Wage Compliance information detailed below was excerpted from DOL General Decision TX160016 or other sources.

1. Additional Trade information:

Unlisted classifications needed for work not listed within the scope of the classifications listed may be added upon the advance approval of Contract Procurement. CONTRACTOR shall submit to City of Austin Contract Procurement the following: classification, a bona fide definition of work to be performed and a proposed wage with sample payrolls conforming to area practice **prior** to the start of the job for that type of work. Proposed trade may not be performed by any trade already listed.

2. Wages

The Total Minimum Wage Rate may be met by any combination of cash wages and credible "bona fide" fringe benefits paid for by the employer. Overtime must be used in computing overtime pay.wages must be calculated using the Total Minimum Wage Rate specified in the Wage Rate Determination or the actual basic rate of pay, whichever is higher.

City of Austin Ordinance No. 2016324-015 requires that construction workers are paid a minimum Wage of at least $13.03/hour. The cash portion of their compensation must meet or exceed this amount.

3. Proper Designation of Trade

A work classification from the Prevailing Wage Poster for each worker must be made based on the actual type of work he/she performed on the job. In summary the work performed, not the "title" determines the correct worker classification and wage. Each worker must be paid no less than the adjusted wage rate on the wage decision for that classification **regardless** of his/her level of skill (exclusive of a bona fide apprentice currently registered in a DOL approved apprentice program - proof of individual registration must be supplied in advance to the City of Austin).

4. Split Classification

If a firm has employees that perform work in more than one classification, it can pay the adjusted wage rates specified for each classification ONLY if it maintains accurate time records showing the amount of time spent in each classification. If accurate time records are not maintained, these employees must be paid the highest adjusted wage rate of all the classifications of work performed by each worker. Accurate time records tracking how many hours a worker performed the work of one trade and then switched to another trade must be accounted for on a daily basis and reflected on Employer Certified Payroll accordingly.

WELDERS - Receive rate prescribed for craft performing operation to which welding is incidental.

==========

Unlisted classifications needed for work not included within the scope of the classifications listed may be added after award only as provided in the labor standards contract clauses (29CFR 5.5 (a) (1) (ii)).

In the listing above, the "SU" designation means that rates listed under the identifier do not reflect collectively bargained wage and fringe benefit rates. Other designations indicate unions whose rates have been determined to be prevailing.

WAGE DETERMINATION APPEALS PROCESS

1.) Has there been an initial decision in the matter? This can be:

* an existing published wage determination
* a survey underlying a wage determination
* a Wage and Hour Division letter setting forth a position on a wage determination matter
* a conformance (additional classification and rate) ruling

On survey related matters, initial contact, including requests for summaries of surveys, should be with the Wage and Hour Regional Office for the area in which the survey was conducted because those Regional Offices have responsibility for the Davis-Bacon survey program. If the response from this initial contact is not satisfactory, then the process described in 2.) and 3.) should be followed.

With regard to any other matter not yet ripe for the formal process described here, initial contact should be with the Branch of Construction Wage Determinations. Write to:

Branch of Construction Wage Determinations
Wage and Hour Division
U.S. Department of Labor
200 Constitution Avenue, N.W.
Washington, DC 20210

2.) If the answer to the question in 1.) is yes, then an interested party (those affected by the action) can request review and reconsideration from the Wage and Hour Administrator (See 29 CFR Part 1.8 and 29 CFR Part 7). Write to:

Wage and Hour Administrator
U.S. Department of Labor
200 Constitution Avenue, N.W.
Washington, DC 20210

The request should be accompanied by a full statement of the interested party's position and by any information (wage payment data, project description, area practice material, etc.) that the requestor considers relevant to the issue.

3.) If the decision of the Administrator is not favorable, an interested party may appeal directly to the Administrative Review Board (formerly the Wage Appeals Board). Write to:

Administrative Review Board
U.S. Department of Labor
200 Constitution Avenue, N.W.
Washington, DC 20210

4.) All decisions by the Administrative Review Board are final.

==========

Notice to Bidders: This form, Addendum – Section 00900, is included for your information only. If an actual Addendum is issued for this project, the format shown below will be used.

ADDENDUM No. _____

Date _____, _____

City of Austin

Project Name _____

C.I.P. No. _____ IFB No.: _____

This Addendum forms a part of the Contract and corrects or modifies original Bid Documents, dated _(*first advertisement date should go here)*_, _____. Acknowledge receipt of this addendum in space provided on bid form. Failure to do so may subject bidder to disqualification.

A. Project Manual Revisions:

B. Drawing Revisions:

This addendum consists of ____ page(s)/sheet(s).

_____
Approved by OWNER

_____
Approved by ENGINEER/ARCHITECT

END

SAMPLE

1.1 Scope of Work

A. This section describes the Contract in general and provides an overview of the extent of the Work to be performed by the CONTRACTOR. Detailed requirements and extent of Work are stated in the Project Manual and applicable Work Assignments. CONTRACTOR shall, except as otherwise specifically stated herein or in any other applicable part of the Contract Documents, provide and pay for all labor, materials, equipment, tools, construction equipment, and other facilities and services necessary for proper execution, testing, and completion of the Work.

B. Any part or item of the Work which is reasonably implied or normally required to complete the Work Assignments shall be performed by the CONTRACTOR and the expense thereof shall be included in the applicable unit prices or lump sum prices bid for the Work. All miscellaneous appurtenances and other items of Work that are required by the Specifications in order to complete the Work Assignments are considered as having been included in the applicable unit prices or lump sum prices bid for the Work even though these appurtenances and items may not be specifically called for in the Bid Documents.

C. The Work shall include furnishing all tools, labor, materials, equipment, and miscellaneous items necessary to install HDPE or copper tubing to replace existing water service lines as delineated in each Work Assignment. Other work in the Contract will include pavement repairs, erosion and sedimentation controls, traffic controls, and other items as needed to achieve Final Completion status for each Work Assignment. The CONTRACTOR shall install the new HDPE or copper tubing service lines via trenchless methods. Replacement of service lines by open cutting pavement will be limited to the quantities listed in Section 00300U-IDIQ unless the CONTRACTOR can prove to OWNER that quantities in excess of the Section 00300U-IDIQ quantities require open cut installation.

D. The Work of this Contract includes sustainability requirements as shown in the Division 1 Sections 01352 and/or 01505 and all other applicable specification sections. It is the intent of the OWNER to work in partnership with the CONTRACTOR in implementing sustainable construction practices to the greatest extent possible.

1.2 Location of Project and Work Assignment Process

A. Each Work Assignment will include a specific location. The OWNER will issue a Work Assignment to the CONTRACTOR providing the scope of Work. The Work Assignment will contain a site drawing, estimated quantities, estimated time of completion and a time/date for a site visit. The CONTRACTOR is required to meet the Project Manager and/or other OWNER's representative(s) at the site within <u>fourteen (14) calendar days</u> of the issued Work Assignment.

B. The Work Assignment may include more than one geographical location but within the limits of construction outlined in Section 00020-IDIQ.

C. During the site visit, the CONTRACTOR will confirm the estimated quantities provided by the OWNER and ask for any additional clarifications. Within <u>seven (7) calendar days</u> after the CONTRACTOR's questions are answered, the

quantities are confirmed and a final site drawing is forwarded to the CONTRACTOR, the CONTRACTOR will complete and submit a signed Work Assignment Form with comfirnation of the Contract Time and a completed Subcontractor Utilization Form. A Work Assignment Form and Subcontractor Utilization Form are attached to this Section 01010-IDIQ.

D. The pricing for each item must be based on the line item pricing in Section 00300U-IDIQ, Additional items not previously in the Section 00300U-IDIQ must be added to the contract by Change Order in accordance with Sections 00700 and 00810-IDIQ.

E. Once counter-signed by the OWNER, a Work Assignment Form becomes a part of the Contract subject to all terms and conditions of the Contract and shall serve as a Notice to Proceed. The CONTRACTOR is not authorized to perform work until the specific Work Assignment is approved and the Notice to Proceed is issued. Work for each Work Assignment will be authorized under a separate Notice to Proceed. Mobilization must begin within seven (7) calendar days of Notice To Proceed for each Work Assignment.

F. The date that a Work Assignment is signed by the OWNER and delivered to the CONTRACTOR with an accompanying Notice to Proceed will be the commencement date for the purposes of the measurement of Contract Time for that individual Work Assignment. Sample Work Assignment packets are included in the Bid Documents as examples of the Work to be bid.

G. The CONTRACTOR will pay liquidated damages for each consecutive day after the agreed time of completion for each separate Work Assignment unless otherwise adjusted by OWNER. If time of completion cannot be agreed upon, the CONTRACTOR will proceed with the Work Assignment and within seven (7) calendar days submit a detailed schedule outlining the work items and time of completion for the OWNER's review. If an agreement still cannot be made, the CONTRACTOR may submit a claim as outlined in Item 16.1 of Section 0700, General Conditions of the Contract.

H. The CONTRACTOR may be required to work on up to two (2) work assignments at a time unless otherwise agreed to in writing by the OWNER. Work must be continuous on each Work Assignment. CONTRACTOR shall work all locations within the scheduled days and hours required in each Work Assignment.

I. The CONTRACTOR will invoice on a monthly basis. The invoice will contain separate payment estimate sheets for each Work Assignment with a roll-up summary outlining the remaining quantities. Upon completion of each Work Assignment the CONTRACTOR will stamp the invoice for that Work Assignment as FINAL and will provide a lien waiver/release for any future changes to that assignment. Retainage for each Work Assignment will be released with Final Payment for the Work Assignment.

1.3 Contractor's Responsibilities

A. Execute all Work, as defined in each Work Assignment. The Work of this Contract is specified in the City of Austin Standard Specifications, Special Provisions and Special Specifications listed in the Table of Contents.

B. Secure all construction-related permits, other than those provided by OWNER as described in paragraph 6.6 of Section 00810-IDIQ, Supplemental General Conditions, and pay for the same.

C. Arrange for any necessary temporary facilities as indicated in Section 01500 – Temporary Facilities.

1.4 Easements and Rights-Of-Way

CONTRACTOR shall confine his construction operations within the limits indicated on the Drawings, and shall use due care in placing construction tools, equipment, excavated materials, and pipeline materials and supplies so as to cause the least possible damage to property and interference with traffic. If the CONTRACTOR requires additional easement for his operations, the CONTRACTOR is solely responsible for acquisition and maintenance of the easement. No additional compensation will be provided by the OWNER.

A. Easements

Easements across private property are indicated on the Drawings. CONTRACTOR shall set stakes to mark the boundaries of construction easement across private property. The stakes shall be protected and maintained until completion of construction and cleanup.

B. Rights-of-Way

Permits for Work in rights-of-way shall be obtained by the CONTRACTOR. All Work performed and all operations of CONTRACTOR, his employees, or subcontractors, within the limits of railroad and highway rights-of-way, shall be in conformity with the requirements and be under the control (through OWNER) of the railroad or highway authority owning, or having jurisdiction over and control of, the right-of-way in each case.

1.5 Operation of Existing Facilities

Existing water and wastewater facilities shall be kept in continuous operation throughout the construction period. No interruption will be permitted which adversely affects the degree of service provided. Provided permission is obtained from OWNER in advance, portions of the existing facilities may be taken out of service for short periods corresponding with periods of minimum service demands.

CONTRACTOR shall provide temporary facilities and make temporary modifications as necessary to keep the existing facilities in operation during the construction period.

1.6 Connections to Existing Facilities

Unless otherwise specified or indicated, CONTRACTOR shall make all necessary connections to existing facilities including structures, drain lines, and utilities. In each case, CONTRACTOR shall receive permission from OWNER or the owning utility prior to undertaking connections. CONTRACTOR shall protect facilities against deleterious substances and damage.

Connections to existing facilities which are in service shall be thoroughly planned in advance, and all required equipment, materials and labor shall be on hand at the time of undertaking the connection. Work shall proceed continuously (around the clock) if necessary to complete connections in the minimum time. Operation of valves or other appurtenances on existing utilities, when required, shall be by or under the direct supervision of the owning utility.

1.7 Unfavorable Construction Conditions

No portion of the Work shall be constructed under conditions which adversely affect the quality or efficiency thereof, unless special means or precautions are taken by CONTRACTOR to perform the Work in a proper and satisfactory manner.

End

IDIQ WORK ASSIGNMENT & INCORPORATED CHANGE ORDER FORM

Contract No.:_____

WORK ASSIGNMENT NO.:_____

TO: _____
contractor name address / telephone / fax / email

FROM: _____
project manager name / address / telephone / fax / email

PROJECT NAME: _____
name / CIP ID number

Fund: ____ Dept: _____ Unit: _____ Object Code: _____ Activity: _____ Rept: _____

Fund: ____ Dept: _____ Unit: _____ Object Code: _____ Activity: _____ Rept: _____

Federal Funds: Yes ☐ No ☐

SCOPE OF WORK: _____

_____

_____

PROJECT LOCATION: _____

DATE OF ISSUANCE: _____

SUBSTANTIAL COMPLETION (IF NEEDED): _____

FINAL COMPLETION: _____

Bid Items per Section 00300U-IDIQ:

Item #	Description	Quantity	Unit	Unit Cost	Amount
Subtotal					

Change Order in accordance with Sections 00700 and 00810-IDIQ of the Contract

Proposed Item #	**Description**	Assignment *Quantity Only	**Unit**	**Unit Cost**	**Amount**
Subtotal					

***Quantity will vary for future assignments.**

(Bid Items and Change Order Items) Total $:_____

The Change Order agreed to herein constitutes a complete and equitable adjustment to the referenced Contract for the portion of the Work addressed herein and the CONTRACTOR hereby releases the OWNER from any and all liability under the Contract for further equitable adjustments, including additional time for performance, attributable to such facts or circumstances giving rise to this Change Order. Once agreed to by both parties as indicated by the execution of this Work Assignment and incorporated Change Order, the Items in the Change Order will become a part of the Contract referenced above. This Change Order does not change the not to exceed Contract Amount.

Signatures

CONTRACTOR agrees that this Work Assignment is a Contract Document and that work performed and payments made pursuant to this Work Assignment shall be subject to the terms and conditions of all other Contract Documents for the Contract referenced above, unless otherwise noted. The CONTRACTOR shall be paid for work described in this Work Assignment, in whole or in part, based on the unit/unit costs as provided in the Bid Form, Section 00300-IDIQ and all Change Orders.

CONTRACTOR: _____Title _____ Date_____

Notice to Proceed

When executed by the OWNER and delivered to the CONTRACTOR, the CONTRACTOR is authorized to proceed with Work as described in this Work Assignment, for the amount indicated above, in accordance with the contract referenced above and incorporated herein.

OWNER:

City of Austin

Project Manager: _____Date_____

Subcontractor Utilization Form

Contract Management Department
Contract Management Division

Project Manager _____ / **Contract Number** _____

Project Location: _____ **Assignment Number** _____

Date: _____ **Submitted by:** _____ **Firm:** _____

Firm	Cert Type	Description of Work	Amount $
<Your Firm Here>		<Brief Description of work to be performed>	$0.00
<Subcontractor 1>		<Brief Description of work to be performed>	$0.00
<Subcontractor 2>		<Brief Description of work to be performed>	$0.00
<Subcontractor 3>		<Brief Description of work to be performed>	$0.00
<Subcontractor 4>		<Brief Description of work to be performed>	$0.00
<Subcontractor 5>		<Brief Description of work to be performed>	$0.00
<Subcontractor 6>		<Brief Description of work to be performed>	$0.00
<Subcontractor 7>		<Brief Description of work to be performed>	$0.00
<Subcontractor 8>		<Brief Description of work to be performed>	$0.00
<Subcontractor 9>		<Brief Description of work to be performed>	$0.00
<Subcontractor 10>		<Brief Description of work to be performed>	$0.00
		TOTAL	**$0.00**

MBE/WBE PARTICIPATION

Please calculate participation percentages for each category, based upon the total dollar amount for certified firms in the specified category divided by the Total Amount of the assignment

	Non - Certified	African American	Hispanic	sian / Native America	MBE	WBE
This Assignment	***0.00%***	***0.00%***	***0.00%***	***0.00%***	***0.00%***	***0.00%***
Compliance Plan	**0.00%**	**0.00%**	**0.00%**	**0.00%**	**0.00%**	**0.00%**

See next page for approval signatures

Please provide an explanation for any categories where participation for this assignment is less than the approved Compliance Plan percentages:

I certify that the information listed above has been reviewed and is accurate to the best of my knowledge.

Firm Representative _____ **Date** _____

FOR COA USE ONLY

I have reviewed the Constractor utilization and MBE/WBE participation for this assignment. A copy of this form will be forwarded to the appropriate SMBR Representative

Project Manager: _____ **Date** _____

PART 1 – MOBILIZATION

The Work of this Contract includes Mobilization as an Allowance to be paid as a percentage of each individual Work Assignment.

1.1 Description

An Allowance is provided with this Contract for the mobilization of personnel, equipment and materials at the Work site for other contract items that will be performed by the CONTRACTOR. Mobilization shall include, but not be limited to the movement of equipment, personnel, material, supplies, etc. to and from the Work site; and the installation of necessary facilities (when not paid for separately) prior to the initiation of the Work and their removal at the completion of the Work.

1.2 References

Section 00300U-IDIQ, Bid Form

1.3 Measurement and Payment

Each individual Work Assignment will typically include one (1) mobilization and, depending on site conditions, may require that the CONTRACTOR demobilize and re-mobilize multiple times to complete the work on a given Work Assignment. Regardless of the number of demobizations and re-mobilizations only one (1) mobilization payment will be made per assignment based on the approved amount of the individual Work Assignment as follows:

Work Assignment Amount	Mobilization (% of Work Assignment)
Less than $5,000	10%
$5,000 - $25,000	8%
$25,001 - $50,000	7%
$50,001 - $100,000	6%
$100,001 - $250,000	5%
$250,001 - $500,000	4%
Greater than $500,000	3%

In the event that a single Work Assignment is completed by the CONTRACTOR within one pay period (i.e., 30 days), mobilization will be paid by the OWNER as a lump sum at the end of the Work Assignment, and shall be calculated using the table above. In the event that a single Work Assignment is to be paid over multiple pay periods, then the CONTRACTOR shall be paid for mobilization as follows:

A. The CONTRACTOR and OWNER will estimate the total Work Assignment amount based on quantities provided in the Work Assignment and associated bid prices established in 00300U-IDIQ, Bid Form.
B. 50% of the mobilization payment will be calculated based on the table above and will be provided, at the CONTRACTOR's request, within the first pay period of that Work Assignment.
C. The remainder of the mobilization payment will be based on the actual Work Assignment amount, and will be paid upon completion of the Work. If a credit is

required, due to reduction on a Work Assignment amount, it will be deducted from payments to the CONTRACTOR.

D. In the event that the work is completed and paid on a single invoice, 100% of the mobilization will be paid on the first, and only, invoice for the subject Work Assignment.
E. The contractor shall track costs for each Work Authorization in a manner acceptable to the OWNER.

The aggregate amount of all Work Assignment payments for Mobilization will not exceed the Allowance. Payment for this Allowance will be made from the Allowance Item on Section 00300U-IDIQ.

End

Grades, Lines and Levels
Section 01050

Work associated with the Contract will generally not require that grades, lines and levels be established or maintained. In the event that grades, lines and levels are necessary for a particular Work Order, the Contractor shall adhere to the following guidelines:

1. All survey work will be performed under the direct supervision of a Texas Registered Professional Land Surveyor (RPLS).

2. OWNER will not stake for construction and will not be on site for survey layout activities, except to perform quality control checks.

3. The CONTRACTOR shall furnish, without charge, experienced personnel and such calibrated survey equipment, tools, stakes, and other materials that the Owner's Representative may require in establishing or checking control points, or in checking survey, layout, and measurement work performed by the CONTRACTOR.

4. The CONTRACTOR shall keep the Owner's Representative informed in a reasonable time in advance of the times and places at which he wishes to do work, so that any checking deemed necessary by the OWNER may be done with minimum inconvenience and minimum delay to the CONTRACTOR. Surveying will be coordinated between the Owner's Representative and CONTRACTOR in a manner convenient to both.

5. During layout, CONTRACTOR shall field verify the elevation and alignment of all tie-in points to existing infrastructure. This work shall be performed sufficiently in advance of construction so that any conflicts may be resolved without delay. Any work done without being properly located may be ordered removed and replaced at the CONTRACTOR's expense.

6. The CONTRACTOR shall carefully preserve all monuments, benchmarks, reference points, and stakes. In case of the destruction thereof, the CONTRACTOR shall bear the cost of replacement and shall be responsible for any mistake or loss of time that may be caused. Permanent monuments or benchmarks, which must be removed or disturbed, shall be protected until properly referenced for relocation. The CONTRACTOR shall furnish materials and assistance for the proper replacement of such monuments or benchmarks.

7. The CONTRACTOR shall satisfy himself before commencing work as to the meaning and correctness of all survey control stakes, marks, etc., and no claim will be entertained by the OWNER for or on account of any alleged inaccuracies, unless the CONTRACTOR notifies the OWNER in writing before commencing the affected Work.

8. As needed for necessary documentation of the work progress, the CONTRACTOR shall maintain and/or protect offset or survey staking for the duration of the project. Any re-staking required to meet this requirement shall be done at the CONTRACTOR'S expense.

9. This item will be subsidiary to each individual Work Order.

End See attached "Construction Staking Layout Sheet"

CONSTRUCTION STAKING LAYOUT SHEET

Project Name: _____ **Date:** _____
C.I.P. ID#: _____ **Instrument No.:** _____
Person Recording: _____ **Weather Conditions:** _____
Crew Members: _____
General Purpose & Scope of Survey: _____

STATION	B.S.	H.I.	F.S.	LEVEL LOOP ELEVATION	ROD READING	HUB ELEVATION AT STATION	(TARGET) (eg., pipe invert) ELEVATION	C - CUT OR F - FILL	% GRADE	NOTES: INDICATE WHETHER CENTERLINE HUB OR _____ FT. OFFSET HUB

DEFINITIONS

General: Basic Contract definitions are included in the General Conditions, Section 00700 included herein.

Approved: The term approved, when used in conjunction with the Owner's Representative's action on the CONTRACTOR'S submittals, applications, and requests, is limited to the Owner's Representative's duties and responsibilities as stated in the Conditions of the Contract. A stamp reading "No Exceptions Taken" shall have the same intent as "Approved".

Furnish: The term furnish means supply and deliver to the Project site, ready for unloading, unpacking, assembly, installation, and similar operations.

Indicated: The term indicated refers to graphic representations, notes, or schedules on the Drawings, or other paragraphs or schedules in the Specifications, and similar requirements in the Contract Documents. Terms such as shown, noted, scheduled, and specified are used to help the reader locate the reference. There is no limitation on location.

Install: The term install describes operations at the Project site including the actual unloading, unpacking, assembly, erecting, placing, anchoring, applying, working to dimension, finishing, curing, protecting, cleaning, and similar operations.

Installer: An Installer is the CONTRACTOR or another entity engaged by the CONTRACTOR, either as an employee, subcontractor, or contractor of lower tier, to perform a particular construction activity, including installation, erection, application, and similar operations. Installers are required to be experienced in operations they are engaged to perform.

Project Site: The space available to the CONTRACTOR for performing construction activities either exclusively or in conjunction with others performing other work as part of the Project. The extent of the Project site is shown on the Drawings and may or may not be identical with the description of the land on which the Project is to be built.

Provide: The term provide means to furnish and install, complete and ready for the intended use.

Regulations: The term regulations includes laws, ordinances, statutes, and lawful orders issued by authorities having jurisdiction, as well as rules, conventions, and agreements within the construction industry that control performance of the Work.

Trades: Using terms such as carpentry is not intended to imply that certain construction activities must be performed by accredited or unionized individuals of a corresponding generic name, such as carpenter. It also does not imply that requirements specified apply exclusively to trades persons of the corresponding generic name.

INDUSTRY STANDARDS

Applicability of Standards: Except where the Contract Documents include more stringent requirements, applicable construction industry standards have the same force and effect as if bound or copied directly into the Contract Documents to the extent referenced. Such standards are made a part of the Contract Documents by reference.

Publication Dates: Comply with the standards in effect as of the date of the Contract Documents.

Conflicting Requirements: Where compliance with two or more standards is specified and where the standards may establish different or conflicting requirements for minimum quantities or quality levels, refer to the Owner's Representative for a decision before proceeding.

Copies of Standards: Each entity engaged in construction on the Project is required to be familiar with industry standards applicable to its construction activity. Copies of applicable standards are not bound with the Contract Documents.

Abbreviations and Names: Trade association names, titles of general standards, and names and titles of government agencies are frequently abbreviated. Where such acronyms or abbreviations are used in the

Specifications or other Contract Documents, they mean the recognized name of the trade association, standards-generating organization, authority having jurisdiction, or other entity applicable to the context of the text provision. Refer to the "Encyclopedia of Associations," published by Gale Research Co., available in most libraries.

AA	Aluminum Association
AABC	Associated Air Balance Council
AAMA	American Architectural Manufacturer's Association
AAN	American Association of Nurserymen.
AASHTO	American Association of State Highway and Transportation Officials.
AATCC	American Association of Textile Chemists and Colorists
ACI	American Concrete Institute
ACIL	American Council of Independent Laboratories
ACPA	American Concrete Pipe Association
ADC	Air Diffusion Council
AFBMA	Anti-Friction Bearing Manufacturers Association
AGA	American Gas Association
AGC	Associated General Contractors of America
AGMA	American Gear Manufacturers Association
AHA	American Hardboard Association
AHAM	Association of Home Appliance Manufacturers
AI	Asphalt Institute
AIA	American Institute of Architects
AIHA	American Industrial Hygiene Association
AISC	American Institute of Steel Construction
AISI	American Iron and Steel Institute
AITC	American Institute of Timber Construction.
ALCA	Associated Landscape Contractors of America
ALI	Associated Laboratories, Inc.
ALSC	American Lumber Standards Committee
AMCA	Air Movement and Control Association
ANSI	American National Standards Institute.
AOAC	Association of Official Analytical Chemists

AOSA	Association of Official Seed Analysts
APA	American Plywood Association
API	American Petroleum Institute.
AREA	American Railroad Engineers Association
ARI	Air Conditioning and Refrigeration Institute
ARMA	Asphalt Roofing Manufacturers Association
ASA	Acoustical Society of America
ASA	American Standards Association.
ASC	Adhesive and Sealant Council
ASCE	American Society of Civil Engineers
ASHRAE	American Society of Heating, Refrigerating & Air Conditioning Engineers
ASME	American Society of Mechanical Engineers
ASPE	American Society of Plumbing Engineers
ASSE	American Society of Sanitary Engineering
ASTM	American Society for Testing and Materials.
AWCMA	American Window Covering Manufacturers Association
AWG	American Wire Gage
AWI	Architectural Woodwork Institute
AWPA	American Wood Preservers Association
AWPB	American Wood Preservers Bureau
AWPI	American Wood Preservers Institute
AWS	American Welding Society
AWWA	American Water Works Association
BHMA	Builders Hardware Manufacturers Association
BIA	Brick Institute of America
BIFMA	Business and Institutional Furniture Manufacturers Association
CAGI	Compressed Air and Gas Institute
CAUS	Color Association of the United States
CBM	Certified Ballast Manufacturers
CCC	Carpet Cushion Council

CDA	Copper Development Association
CE	Corps of Engineers
CFR	Code of Federal Regulations
CGA	Compressed Gas Association
CISCA	Ceiling and Interior Systems Construction Association
CISPI	Cast Iron Soil Pipe Institute
CPSC	Consumer Product Safety Commission
CRI	Carpet and Rug Institute
CRSI	Concrete Reinforcing Steel Institute
CS	Commercial Standard of NBS (U.S. Dept. of Commerce)
CTI	Ceramic Tile Institute
DFPA	Douglas Fir Plywood Association
DHI	Door and Hardware Institute
DLPA	Decorative Laminate Products Association
DOC	U.S. Department of Commerce
DOT	Department of Transportation
ECSA	Exchange Carriers Standards Association
EIA	Electronic Industries Association
EIMA	Exterior Insulation Manufacturers Association
EJMA	Expansion Joint Manufacturers Association
EPA	Environmental Protection Agency
FAA	Federal Aviation Administration
FCC	Federal Communications Commission
FGMA	Flat Glass Marketing Association
FHA	Federal Housing Administration
FM	Factory Mutual Research Organization
FS	Federal Specifications
FSC	Forest Stewardship Council
FTI	Facing Tile Institute
GA	Gypsum Association
GSA	General Services Administration

HEI	Heat Exchange Institute
HI	Hydronics Institute
H.I.	Hydraulic Institute
HMA	Hardwood Manufacturers Association
HPMA	Hardwood Plywood Manufacturers Association
IBD	Institute of Business Designers
ICEA	Insulated Cable Engineers Association, Inc.
IEEE	Institute of Electrical and Electronic Engineers, Inc.
IESNA	Illuminating Engineering Society of North American
IGCC	Insulating Glass Certification Council
ILI	Indiana Limestone Institute of America
IMSA	International Municipal Signal Association
IRI	Industrial Risk Insurers
ISA	Instrument Society of America
ITE	Institute of Transportation Engineers
LEED™	Leadership in Energy and Environmental Design
LIA	Lead Industries Association, Inc.
LPI	Lightning Protection Institute
MBMA	Metal Building Manufacturer's Association
MCAA	Mechanical Contractors Association of America
MFMA	Maple Flooring Manufacturers' Association
MIA	Marble Institute of America
ML/SFA	Metal Lath/Steel Framing Association
MSS	Manufacturers Standardization Society of the Valve and Fittings Industry
MUTCD	Texas Department of Transportation Manual on Uniform Traffic Control Devices
NAAMM	National Association of Architectural Metal Manufacturers
NAIMA	North American Insulation Manufacturers Association
NAPA	National Asphalt Pavement Association
NBFU	National Board of Fire Underwriters

NBGQA	National Building Granite Quarries Association
NBS	National Bureau of Standards (U.S. Dept. of Commerce)
NCMA	National Concrete Masonry Association
NCRPM	National Council on Radiation Protection and Measurements
NCSPA	National Corrugated Steel Pipe Association
NEC	National Electrical Code (Published by NFPA)
NECA	National Electrical Contractors Association
NEII	National Elevator Industry, Inc.
NEMA	National Electrical Manufacturers Association
NETA	International Electrical Testing Association
N.F.P.A.	National Forest Products Association
NFPA	National Fire Protection Association
NHLA	National Hardwood Lumber Association
NIST	National Institute of Standards and Technology
NLGA	National Lumber Grades Authority
NOFMA	National Oak Flooring Manufacturers Association
NPA	National Particleboard Association
NPCA	National Paint and Coatings Association
NRCA	National Roofing Contractors Association
NWMA	National Woodwork Manufacturers Association
OSHA	Occupational Safety and Health Administration
PCA	Portland Cement Association
PCI	Precast/Prestressed Concrete Institute
PDI	Plumbing and Drainage Institute
PE	Professional Engineer
REA	Rural Electrification Administration
RFCI	Resilient Floor Covering Institute
RMA	Rubber Manufacturing Association
RPLS	Registered Professional Land Surveyor
SDI	Steel Deck Institute
S.D.I.	Steel Door Institute

SFPA	Southern Forest Products Association
SGCC	Safety Glazing Certification Council
SIGMA	Sealed Insulating Glass Manufacturers Association
SJI	Steel Joist Institute
SMACNA	Sheet Metal and Air Conditioning Contractors National Association
SPIB	Southern Pine Inspection Bureau
SPRI	Single Ply Roofing Institute
SSPC	Steel Structures Painting Council
SSPMA	Sump and Sewage Pump Manufacturers Association
SWI	Steel Window Institute
SWPA	Submersible Wastewater Pump Association
TCA	Tile Council of America
TEX TEST	TxDOT Laboratory Test
TIMA	Thermal Insulation Manufacturers Association
TPI	Truss Plate Institute
TxDOT	Texas Department of Transportation
UL	Underwriters Laboratory, Inc.
USDA	U. S. Department of Agriculture
USGBC	U. S. Green Building Council
USPS	U. S. Postal Service
WCLIB	West Coast Lumber Inspection Bureau
WCMA	Wallcovering Manufacturers Association
WIC	Woodwork Institute of California
WLPDIA	Western Lath, Plaster, Drywall Industries Association
WRI	Wire Reinforcement Institute
WSC	Water Systems Council
WSFI	Wood and Synthetic Flooring Institute
WWPA	Western Wood Products Association
W.W.P.A.	Woven Wire Products Association

END

PART 1 - GENERAL

1.1 RELATED DOCUMENTS

Documents related to this section will include the construction drawings and general provisions of the Contract, including the General Conditions, Section 00700, Supplemental General Conditions, Section 00810, and other Division 1 requirements.

1.2 SUMMARY

A. This section describes the preconstruction conference and other Project related meetings which may be held on a routine schedule throughout the duration of the Project.

B. The CONTRACTOR, or his authorized representative(s), shall attend all Project related meetings as indicated herein. The CONTRACTOR's representatives, as a minimum, shall include his Project Manager and Superintendent. Other CONTRACTOR's representatives may attend Project related meetings; however, there shall be a maximum of four (4) CONTRACTOR's representatives at any one meeting unless the ENGINEER/ARCHITECT approves a larger number.

C. The CONTRACTOR shall provide all pertinent reports, copies of reports, etc., for each meeting as may be required by this or other sections of the Contract.

1.3 PARTNERING WORKSHOP

A. To complete this work most beneficially for all parties, the Owner desires to form a Partnering Team among the Owner, Engineer/Architect, Contractor, and Subcontractor(s). This relationship will draw on the strength of all parties to identify and achieve mutual goals. The objectives are effective and efficient contract performance, intended to achieve completion within budget, on schedule, and in accordance with the drawings and specifications.

B. The Owner will schedule a Partnering Workshop independent of or in conjunction with the Preconstruction Conference, to facilitate the project objectives. The partnering relationship will be multilateral in makeup and participation will be totally voluntary.

1.4 PRECONSTRUCTION CONFERENCE

A. Attendees

A preconstruction conference shall be held as soon after the award and execution of the Contract as possible and before any Work at the site is started. The conference will be held at a location selected by the Owner's Project Manager. The Owner's Project Manager shall prepare and distribute the meeting agenda, preside over the conference, and may distribute meeting minutes. The conference shall be attended by:

1. CONTRACTOR's Project Manager.
2. CONTRACTOR's Superintendent.
3. Any Subcontractors' and/or Suppliers' representatives whom the CONTRACTOR may desire to invite or whom the ENGINEER/ARCHITECT or OWNER may request to attend.
4. ENGINEER/ARCHITECT's representative.
5. OWNER's Project Manager.
6. OWNER's REPRESENTATIVE
7. OWNER's Sponsor Department Representative.

8. Representative from the City of Austin, Transportation Department if a traffic management plan is required.
9. Representative from the City of Austin, Watershed Protection and Development Review Department, Environmental Inspection Division, if site erosion / sedimentation controls are required.
10. Representative from the City of Austin, Transportation Department if utility coordination has occurred through the Austin Utility Location and Coordination Committee.
11. Representative from the City of Austin, Contract Management Department, Contract Administration Division, to discuss wage.
12. Representative from the City of Austin, Small and Minority Business Resources Department to discuss M/WBE compliance.

B. Meeting topics

The topics to be discussed may include, but will not be limited to, the following items:

1. Introduction of persons attending the meeting.
2. General project description, including length of contract and liquidated damages.
3. Key personnel associated with the construction (may include, but is not limited to the following):
   - CONTRACTOR's Project Manager
   - CONTRACTOR's Superintendent
   - OWNER's Project Manager
   - ENGINEER/ARCHITECT's representative
   - OWNER's Sponsor Department Representative.
   - Representatives of the various utilities.
4. Lines of communication and chains of command.
5. Wage and personnel records and reporting requirements.
6. Subcontractors and suppliers.
7. Submittal review and approval procedure. Submittals may include, but are not limited to the following:
   - Letter stating the name and qualifications of the CONTRACTOR's Superintendent
   - Letter(s) from the Subcontractor(s) listing their salaried specialists
   - If applicable, a letter designating the Registered Professional Land Surveyor
   - If applicable, a letter designating the Safety Representative (for general project safety) and the "Competent Person" for excavation safety
   - Excavation Safety Systems Plan
   - Schedule of Values
   - Schedule for submittals
   - Shop drawings
   - Construction schedule (The schedule shall indicate the phases of work in which subcontractors will be participating. Subcontractors shall be indicated by name.)
   - Payroll reports
   - Substitution of subcontractors
   - Non-use of asbestos materials affidavit
   - Appropriate safety training certificates for workers that will initially be on site

- Documentation for all workers initially on site who are governed by a prevailing wage classification as described in Section 00830.
- Construction Equipment Emissions Reduction Plan

8. Job and traffic safety.
9. Permits.
10. Utility coordination report.
11. Notification of property owners and other affected by the project
12. Job meetings.
13. Use of the site for construction, storage, staging, etc., and interrelationship with other contracts.
14. Equal opportunity requirements.
15. Laboratory testing of material requirements.
16. Inventory of materials stored on site provisions.
17. Progress estimate and payment procedure.
18. Posting of signs.
19. Project safety.
20. Prompt payment procedure.
21. Review of contract - addenda, supplementary general conditions, special provisions, special specifications, and other unique project items.
22. Other

1.5 JOB MEETINGS

A. General

Job meetings shall be held as deemed necessary by the ENGINEER/ARCHITECT or OWNER or as requested by the CONTRACTOR throughout the duration of the Project. The meetings shall be held at a location selected by or approved by the Owner's Representative. The OWNER's REPRESENTATIVE or CONTRACTOR, as agreed to, shall preside over the meeting and issue meeting minutes.

B. Attendees

Job meetings will be attended by the following:

1. CONTRACTOR's Project Manager, when requested to attend.
2. CONTRACTOR's Construction Superintendent.
3. Any subcontractors' and/or suppliers' representatives whom the CONTRACTOR may desire to invite or whom the ENGINEER/ARCHITECT or OWNER requests to attend.
4. OWNER's REPRESENTATIVE
5. ENGINEER/ARCHITECT's representative(s), if needed or required.
6. OWNER's PROJECT MANAGER, if needed or required
7. OWNER's Sponsor Department representative(s), if needed or required.

C. Meeting topics

The topics will include, but not necessarily be limited to, the following subjects:

1. Review of previous meetings' notes and update of pertinent information and Project status.
2. Identification and discussion of new job related construction problems. Such discussion will be toward resolving identified problems.
3. Review work accomplished to date and establish proposed construction activities for the upcoming week(s).
4. Discuss the status of or need for change orders.
5. Check of required bonds and insurance certificates (including Workers' Compensation Insurance verification for CONTRACTOR's, Subcontractor's, and Sub-Subcontractor's employees as stated in Section 00700, General Conditions, 5.2 Workers' Compensation).
6. Status of pay requests.
7. Work in progress.
8. Review and update construction schedule.
9. Review of submittals schedule and status of submittals.
10. Status of SMBR Compliance Plan.
11. Status of Safety Training certificates for all new workers on project.
12. Other.

1.6 OTHER MEETINGS

Other meetings shall be held from time to time as may be requested by the CONTRACTOR, the ENGINEER/ARCHITECT, or the OWNER. The time and place of the meetings shall be as mutually agreed upon. The attendance at the meetings shall be as requested by the party requesting the meeting.

END

PART 1 - GENERAL

1.1 RELATED DOCUMENTS:

The Contractor prepares submittals. Drawings and general provisions of Contract, including Section 00700, “General Conditions”; Section 00810, “Supplemental General Conditions”; Division 1 requirements and City of Austin Technical Specifications and Special Provisions thereto, should be used as the related documents for this requirement. Attachment 1 lists the submittals that have been identified for this project.

1.2 SUMMARY

A. This Section includes administrative and procedural requirements for submittals required for performance of the Work, including the following:

1. Security plan.
2. Contractor's construction schedule.
3. Submittal schedule.
4. Shop drawings.
5. Product data.
6. Samples.
7. Quality assurance and quality control submittals, including calculations, mix designs and substantiating test results.

B. Administrative Submittals: Refer to other Division 1 Sections and other Contract Documents for requirements for administrative submittals. Such submittals include, but are not limited to, the following:

1. Permits.
2. Applications for Payment.
3. Performance and Payment bonds.
4. Insurance certificates.
5. Monthly Subcontractors expense report.
6. Non-use of asbestos affidavits

C. Related Sections: The following Sections contain requirements that relate to this Section:

1. Section 00700, “General Conditions”; Section 00810, “Supplemental General Conditions”; and/or Division 1, Section 01025, "Measurement and Payment" specifies requirements for submittal of the Schedule of Values.

2. Division 1, Section 01200, "Project Meetings" specifies requirements for submittal and distribution of meeting and conference minutes.

3. Section 00700, “General Conditions”; Section 00810, “Supplemental General Conditions”; and/or Division 1, Section 01700, "Contract Close-out" specifies requirements for submittal of Project Record Documents and warranties at project close-out.

4. Section 00700, “General Conditions” Article 6.2.4 specifies requirements for Substitutes and “Approved Equal” Items.

PART 2 - PRODUCTS - not used

PART 3 - EXECUTION

3.1 SUBMITTAL PROCEDURES

Contractor shall be responsible for the following:

A. Coordination: Coordinate preparation and processing of submittals with performance of construction activities. Transmit each submittal sufficiently in advance of performance of related construction activities to avoid delay.

1. Coordinate each submittal with fabrication, purchasing, testing, delivery, other submittals, and related activities that require sequential activity.

2. Coordinate transmittal of different types of submittals for related elements of the Work so processing will not be delayed by the need to review submittals or resubmittals concurrently.

   a. The E/A reserves the right to withhold action on a submittal requiring coordination with other submittals until all related submittals are received.

3. Processing: To avoid the need to delay installation as a result of the time required to process submittals, allow sufficient time for submittal review, including time for resubmittals.

   a. Allow fourteen (14) calendar days for initial review. Allow additional time if the Engineer must delay processing to permit coordination with subsequent submittals.

   b. If an intermediate submittal is necessary, process the same as the initial submittal.

   c. Allow fourteen (14) calendar days for processing each resubmittal.

   d. No extension of Contract Time will be authorized because of failure to transmit submittals to the E/A sufficiently in advance of the Work to permit processing.

B. Submittal Preparation: Place a permanent label or title block on each submittal for identification. Indicate the name of the entity that prepared each submittal on the label or title block.

1. Provide a space approximately 4 inches by 5 inches (100 by 125 mm) on the label or beside the title block on Shop Drawings to record the Contractor's review and approval markings and the action taken.

2. Include the following information on the label for processing and recording action taken.

   a. Project name.
   b. Date.
   c. Name and address of the Contractor's Engineer.
   d. Name and address of the Contractor.
   e. Name and address of the subcontractor.
   f. Name and address of the supplier.
   g. Name of the manufacturer.
   h. Number and title of appropriate Specification Section.
   i. Drawing number and detail references, as appropriate.

C. Number of Copies:

1. Two (2) copies of the proposed Construction schedule and subsequent revision are required.

2. Two (2) copies of the proposed Submittal schedule and subsequent revision are required.

3. Nine (9) copies of Shop Drawings, Product, Product Samples, Quality Assurance and Quality Control submittals are required.

D. Submittal Transmittal: Package each submittal appropriately for transmittal and handling. Transmit each submittal from the Contractor to the E/A through the Owner's Representative using a transmittal form (An example Transmittal Form is provided at the end of this section). The E/A will not accept submittals received from sources other than the Contractor.

1. On the transmittal, record relevant information and requests for data. On the form, or separate sheet, record deviations from Contract Document requirements, including variations and limitations. Include Contractor's certification that information complies with Contract Document requirements.

2. Number transmittals in sequence for each Series of the Specifications thus: x-xxx. The number after the dash indicates the Section of the Specifications, and the number before the dash is the sequence number of the transmittal. For example, the first item submitted related to Specification Item No. 506, "Manholes" would be labeled **1-506**, the second item submitted would be labeled **2-506**, etc. If the submittal item relates to a Special Provision or Special Specification, use **SP506** or **SS5061**, for example, to indicate the applicable Specification Section. Identify resubmittals with a letter of the alphabet following the original sequence number, using "A" for the first resubmittal, "B" for the second resubmittal, etc. For example, the first resubmittal of the second item submitted for Specification SP506 would be labeled **2A-SP506**.

3.2 CONTRACTOR'S CONSTRUCTION SCHEDULE

A. Construction Schedule: As described in Section 2.4.2 of Section 00700 "General Conditions", prepare a fully developed Contractor's construction schedule ("Baseline Schedule") using Microsoft Project© software unless otherwise approved by Owner's Representative. Submit Baseline Schedule prior to or at the preconstruction conference, and submit updated schedules as specified by the E/A, usually at each regularly scheduled Project Meeting and with each pay application.

1. Detail each significant construction activity and use a weekly timeframe for the schedule. Use the same breakdown of units of the Work as indicated in the "Schedule of Values."

2. With each update, revise task completion percentage and mark completed tasks.

3. Prepare the schedule on a sheet, or series of sheets, of stable transparency, or other reproducible media, of sufficient width to show data for the entire construction period.

4. Secure time commitments for performing critical elements of the Work from parties involved. Coordinate each element on the schedule with other construction activities; include minor elements involved in the sequence of the Work. Show each activity in proper sequence. Indicate graphically the critical path items and the sequences necessary for completion of related portions of the Work.

5. Indicate the phases of work in which subcontractors will be participating. Subcontractors shall be indicated by name.

6. Coordinate the Contractor's Construction Schedule with the Schedule of Values, list of subcontracts, Submittal Schedule, progress reports, payment requests, and other schedules.

7. Indicate substantial completion in advance of the date established for Final Completion to allow time for the E/A's procedures necessary for certification of Substantial and Final Completion.

B. Work Stages: Indicate important stages of construction for each major portion of the Work, including submittal review, testing, and installation.

C. Cost Correlation: Within the Baseline Schedule, provide cost information indicating planned and actual costs. On the appropriate task line(s), show dollar volume of Work performed as of the dates used for preparation of applications for payment. Refer to Section 00700, "General Conditions", Article 14 Payment to Contractor and Completion for cost reporting and payment procedures.

D. Distribution: Following response to the Baseline Schedule submittal, distribute electronic copies to the E/A, subcontractors, suppliers, and other parties required to comply with scheduled dates. Keep a copy at the Project Site at all times.

1. When revisions are made, distribute to the same parties and post in the same locations. Delete parties from distribution when they have completed their assigned portion of the Work and are no longer involved in construction activities.

E. Schedule Updating: Revise the schedule after each meeting, event, or activity where revisions have been recognized or made and as requested by the E/A. Issue the updated schedule concurrently with the report of each meeting, or as requested by the E/A.

3.3 SUBMITTAL SCHEDULE

A. Concurrently with the development of the Contractor's Construction Schedule, prepare a complete schedule of submittals. Submit the initial Submittal Schedule along with the Construction Schedule, at, or prior to, the Pre-construction Conference.

1. Coordinate Submittal Schedule with the list of subcontractors, Schedule of Values, and the list of products as well as the Contractor's Construction Schedule.

2. Prepare the schedule in chronological order. Provide the following information:

a. Scheduled date for the first submittal.
b. Related Section number or Specification number.
c. Submittal category (Shop Drawings, Product Data, Calculations, Test Results, or Samples).
d. Name of the subcontractor.
e. Description of the part of the Work covered.
f. Scheduled date for resubmittal.
g. Scheduled date for completion of the E/A's review.

B. Distribution: Following Owner's response to the initial submittal, print and distribute copies to the Owner's Representative, E/A, Owner, subcontractors, suppliers, and other parties required to comply with submittal dates indicated. Keep copies at the Project Site at all times.

1. When revisions are made, distribute to the same parties and post in the same locations. Delete parties from distribution when they have completed their assigned portion of the Work and are no longer involved in construction activities.

C. Schedule Updating: Revise the schedule after each meeting or activity where revisions have been recognized or made. Issue the updated schedule concurrently with the report of each meeting, or as requested by the E/A.

3.4 CONSTRUCTION SEQUENCE PLANS

The Contractor is required to submit construction sequence plans to the City at, or prior to, the pre-construction conference for approval. The Project shall be divided into phases according to the sequence of construction given in the Drawings and traffic control plans. The Contractor shall arrange his/her work schedule to complete all Work on each phase, including street repair, any valve casting or manhole adjustments, and street overlay before moving on to the next work area.

3.5 SHOP DRAWINGS

A. Submit newly prepared information drawn accurately to scale. Highlight, circle, or otherwise indicate deviations from the Contract Documents. Do not reproduce Contract Documents or copy standard information as the basis of Shop Drawings. Standard information prepared without specific reference to the Project is not a Shop Drawing.

B. Shop Drawings include fabrication and installation Drawings, setting diagrams, schedules, patterns, templates and similar Drawings. Include the following information:

1. Dimensions;
2. Identification of products and materials included by sheet and detail number;
3. Compliance with specified standards;
4. Notation of coordination requirements; and
5. Notation of dimensions established by field measurement.
6. Sheet Size: Except for templates, patterns and similar full-size Drawings, submit Shop Drawings on sheets at least 8-1/2 inches by 11 inches but no larger than 24 inches by 36 inches.
7. Do not use Shop Drawings without an appropriate stamp indicating action taken.

3.6 PRODUCT DATA

A. Collect Product Data into a single submittal for each element of construction or system. Product Data includes printed information, such as manufacturer's installation instructions, catalog cuts, standard color charts, roughing-in diagrams and templates, standard wiring diagrams, applicable certifications and performance curves.

1. Mark each copy to show applicable choices and options. Where printed Product Data includes information on several products that are not required, mark copies to indicate the applicable information. Include the following information:

   a. Manufacturer's printed recommendations;
   b. Compliance with trade association standards;
   c. Compliance with recognized testing agency standards;
   d. Application of testing agency labels and seals;
   e. Notation of dimensions verified by field measurement; and
   f. Notation of coordination requirements.

2. Do not submit Product Data until compliance with requirements of the Contract Documents has been confirmed.

3. Distribution: Furnish copies of final submittal to installers, subcontractors, suppliers, manufacturers, fabricators, and others required for performance of construction activities. Show distribution on transmittal forms.

   a. Do not proceed with installation until a copy of the final submission of Product Data is in the Installer's possession.

   b. Do not permit use of unmarked copies of Product Data in connection with construction.

4. Potable Water, Reclaimed Water, and Wastewater Items or Projects: The Contractor shall submit descriptive information and evidence that the materials and equipment the Contractor proposes for incorporation into the Work is of the kind and quality that satisfies the specified functions and quality. **Austin Water Utility Standard Products Lists (SPL)** are a part of the Specifications. Contractors shall use products specified in the Contract Documents, listed on the SPLs, or approved by AWU through the process in Section 2.4.0 of the Utilities Criteria Manual. Products contained in the SPL cannot be substituted for items shown on the Drawings, or called for in the specifications, unless approved by the E/A in conjunction with the Austin Water Utility Standards Committee. **Unless otherwise specified,** products

current at the time of solicitation shall be installed except where an updated List has been issued to remove a product because of quality or performance issues.

3.7 SAMPLES

A. Submit full-size, fully fabricated Samples cured and finished when specified and physically identical with the material or product proposed. Samples include partial sections of manufactured or fabricated components, cuts or containers of materials, color range sets, and swatches showing color, texture, and pattern.

1. Mount or display Samples in the manner to facilitate review of qualities indicated. Include the following:

   a. Specification Section number and reference;
   b. Generic description of the Sample;
   c. Sample source;
   d. Product name or name of the manufacturer;
   e. Compliance with recognized standards; and
   f. Availability and delivery time.

2. Submit Samples for review of size, kind, color, pattern, and texture. Submit Samples for a final check of these characteristics with other elements and a comparison of these characteristics between the final submittal and the actual component as delivered and installed.

   a. Where variation in color, pattern, texture, or other characteristic is inherent in the material or product represented, submit at least 3 multiple units that show approximate limits of the variations.

   b. Refer to other Specification Sections for requirements of Samples that illustrate workmanship, fabrication techniques, details of assembly, connections, operation, and similar construction characteristics.

   c. Refer to other Sections for Samples to be returned to the Contractor for incorporation in the Work. Such Samples must be undamaged at time of use. On the transmittal, indicate special requests regarding disposition of Sample submittals.

   d. Samples not incorporated into the Work, or otherwise designated as the Owner's property, are the property of the Contractor and shall be removed from the site prior to Substantial Completion.

3. Maintain sets of Samples, as returned, at the Project Site, for quality comparisons throughout the course of construction.

   a. Unless noncompliance with Contract Document provisions is observed, the submittal may serve as the final submittal.

   b. Sample sets may be used by Owner for final acceptance of the construction associated with each set.

B. Distribution of Samples: Prepare and distribute additional sets to subcontractors, manufacturers, fabricators, suppliers, installers, and others as required for performance of the Work. Show distribution on transmittal forms.

3.8 QUALITY ASSURANCE AND QUALITY CONTROL SUBMITTALS

A. Submit quality assurance and quality control submittals, including design data, certifications, manufacturer's instructions, manufacturer's field reports, materials test results, field testing and inspection reports, and other quality-control submittals as required under other Sections of the Specifications.

B. Certifications: Where other Sections of the Specifications require certification that a product, material, or installation complies with specified requirements, submit a certification from the manufacturer or responsible Engineer certifying compliance with specified requirements.

1. Signature: Certification shall be signed by an officer of the corporation or other individual authorized to sign documents on behalf of the company.

C. Calculations: When required in the technical specification, calculations shall be prepared and stamped by a Professional Engineer registered in the State of Texas.

D. Concrete, Controlled Low Strength Material, Asphalt Stabilized Base and Hot Mix Asphaltic Concrete Mix Designs and Substantiating Test Data: Requirements for submittal of mix designs and substantiating test data are specified in the applicable Technical Specification Section. Each separate batch plant supplying ASB, HMAC and/or concrete shall submit mix designs to the Owner's Representative for review.

3.9 TECHNICAL SUBMITTALS REQUIRED

A. Technical submittals required include, but are not limited to, the following list. This list is provided as an aid to the Contractor, but is not intended to be all inclusive. The Contractor shall refer to the Technical Specifications for additional requirements.

Specification	Type of Submittal
210S - Flexible Base	Material Data, Test Results
340 - Hot Mix Asphaltic Concrete	Material Data, Mix Designs, Test Results
403 - Concrete for Structures	Material Data, Mix Designs, Test Results
504S - Adjusting Structures	Material Data
509S - Excavation Safety Systems	Excavation Safety Systems Plan, Calculations
510 - Pipe	Material Data, Product Data
610S - Preservation of Trees and Other Vegetation	Product Data

3.10 ENGINEER/ARCHITECT'S ACTION

A. Except for submittals, for the record, or for information where action and return is not required, the E/A will review each submittal, mark to indicate action taken, and return within the time frame specified in Paragraph 3.1.A.3.

1. Compliance with specified characteristics is the Contractor's responsibility.

B. Action Stamp: The E/A will stamp each submittal with a uniform, action stamp. The E/A will mark the stamp appropriately to indicate the action taken, as follows:

1. "Reviewed": the Work covered by the submittal may proceed provided it complies with requirements of the Contract Documents. Final payment depends on that compliance.

2. "Reviewed with Comments": the Work covered by the submittal may proceed provided it complies with notations or corrections on the submittal and requirements of the Contract Documents. Final payment depends on that compliance.

3. "Revise and Resubmit" or "Rejected": do not proceed with Work covered by the submittal, including purchasing, fabrication, delivery, or other activity. Revise or prepare a new submittal according to the notations and resubmit without delay. Repeat if necessary to obtain different action mark.

a. Do not use, or allow others to use, submittals marked "Revise and Resubmit" or "Rejected" at the Project Site or elsewhere where Work is in progress.

4. Other Action: Where a submittal is for information, or for record purposes, or for special processing, or for other activity, the E/A will return the submittal marked "Record Copy", "Action Not Required" or "No Action Taken."

C. Unsolicited Submittals: The E/A will return unsolicited submittals to the sender without action.

3.11 PREPARATION AND SUBMITTAL OF CONSTRUCTION RECORD DRAWINGS

The Owner's Representative and the Contractor's Superintendent will each maintain a set of bluelines noting any changes in ink during construction of the Project. The Owner's Representative and the Contractor's Superintendent will compare bluelines at least weekly (at a time mutually acceptable to both) to exchange information and compare notes to ensure all items installed and changes are documented. The following is a recommended minimum of items to be noted:

GENERAL

1. Notes should be sufficiently clear to allow a draftsperson to easily make the necessary changes without the need for field checks and interpretation.
2. One complete set of Construction Record bluelines will be submitted prior to the final pay request and forwarded to the Owner.

STREET RECONSTRUCTION AND OVERLAY PROJECTS

1. Location, type, and quantity of all work added or deleted from the Project including repair areas, milled areas, sidewalk, ramps, curb and gutter, etc.
2. Deviations in street, sidewalk, curb and gutter location and grades from Drawings.

WATER/WASTEWATER PROJECTS

1. Type, name and model numbers of all valves (with # of turns to open/close), air release valves, drain and fire hydrants noted at locations installed.
2. Installed locations of all assignments, appurtenances and elevations which differ from those indicated on the Drawings.
3. Pipe manufacturer type and classification noted in sufficient detail to determine location and extent of each type or classification installed.
4. Modification to any standard or special details noted.
5. Location and description of pipe closures.
6. Thrust blocking locations and restrained pipe lengths, approximate dimensions and quantities noted.
7. Location, type and quantity of all addition and deletions.
8. Changes in grade.

The above list is not intended to be complete. Any information noted which could be used for future maintenance, location and construction projects is encouraged to be noted on the bluelines.

3.12 CONSTRUCTION DIARIES

The Contractor shall prepare a daily construction diary recording as a minimum the following information concerning events at the site and submit duplicate copies to the Owner's Representative at weekly intervals. The copies are to be signed by the project Superintendent as defined in Section 00700, Article 6.1.2.

1. Work performed;
2. Approximate count of Contractor's personnel, by classification, on the site;
3. List by classification, of all Subcontractors, personnel and any professionals on the site that day;
4. List of all equipment on the site by make and model;
5. High and low temperatures together with general weather conditions;
6. Start time and finish time of day's work;
7. Accidents and / or unusual events;
8. Meetings and significant decisions made;

9. Stoppages, delays, shortages and / or losses;
10. Meter readings and / or similar recordings;
11. Emergencies procedures that may have been needed;
12. Orders and requests of governing authorities;
13. Change Orders received and implemented;
14. Services connected and / or disconnected;
15. Installed equipment and / or system tests and / or startups and results;
16. Partial completions and / or occupancies; and
17. Date of substantial completion certified.

Shop Drawing Transmittal

Month XX, 2008

Transmittal No. _____
Previous Transmittal No. _____
Previous Submittal Date _____

City of Austin
Construction Inspection Division
Public Works Department
P.O. Box 1088
Austin, Texas 78767

Project Name: Austin Lakeside Drive

Attention: Owner's Representative

Enclosed are nine (9) copies of the following items for your review:

Item No.	Description	Submittal Type	Specification Section	Subcontractor/Supplier
1.	6" DI Pipe	Produce Data	510	ABC Company
2.	8" Resilient Seat Gate Valve	Product Data	511	DEF Company

NOTE: Item 1 above contains a deviation from the Specifications as indicated on the item

Submitted by: _____

XYZ Company
101 Ranch Road 2974
Austin, Texas 78759

Example

END

Division 1 General Requirements

SUSTAINABLE CONSTRUCTION REQUIREMENTS

Section 01352

Non-Building Project using Baseline Sustainability Criteria

PART 1 - GENERAL

1.1 RELATED DOCUMENTS

A. Drawings and general provisions of the Contract, including General and Supplementary Conditions and other Division 1 Specification Sections, apply to this Section. The requirements may or may not include reference to sustainability.

Language in each section provides detailed guidelines to inform the Contractor of appropriate performance requirements for specific materials and products. All Sustainable design, materials, products, and methods must meet the specifications as written unless otherwise approved by the Architect or Engineer.

Related Sections include the following Division 1 Sections:

1. Section 01300 Submittals.
2. Section 01505 Construction and Demolition Waste Management and Disposal.

1.2 SUMMARY

A. This Section includes general requirements and procedures for compliance with certain Sustainable Construction requirements.

1. Some Sustainability requirements are dependent on material selections and may not be specifically identified as sustainability requirements. Compliance with requirements may be used as one criterion to evaluate substitution requests.

2. Additional Sustainability Construction requirements are dependent on design and other aspects of the Project that are not part of the Work of the Contract.

B. Related Sections: The contents of this Section are related to all Sections of these Specifications. Language in each section provides detailed guidelines to inform the Contractor of appropriate performance requirements for specific materials and products. All sustainable design materials, products, and methods must meet the specifications as written unless otherwise approved by the Architect or Engineer.

1.3 DEFINITIONS

A. Certificates of Chain-of-Custody: Certificates signed by manufacturers certifying that wood used to make products was obtained from forests certified by an FSC-accredited certification body to comply with FSC 1.2, "Principles and Criteria." Certificates shall include evidence that mill is certified for chain-of-custody by an FSC-accredited certification body.

B. Regionally Manufactured Materials: Materials that are manufactured within a radius of 500 miles (800 km) from the Project location. Manufacturing refers to the final assembly of components into the product that is installed at the Project site.

C. Regionally Extracted, Harvested, or Recovered Materials: Materials that are extracted, harvested or recovered and manufactured within a radius of 500 miles (800 km) from the Project site.

D. Recycled Content: The percentage by weight of constituents that have been recovered or otherwise diverted from the solid waste stream, either during the manufacturing process (pre-consumer), or after consumer use (post-consumer).

E. Spills and scraps from the original manufacturing process that are combined with other constituents after a minimal amount of reprocessing for use in further production of the same product are not recycled materials.

F. Discarded materials from one manufacturing process that are used as constituents in another manufacturing process are pre-consumer recycled materials.

E. Albedo: The ratio of the amount of light reflected from a material to the amount of light shone on the material ranging from 0 (black) to 1 (white). As defined by the USGBC, a high albedo material has a reflectance of at least 0.3. Albedo is also known as solar reflectance or reflectivity.

F. Heat island effect: When warmer temperatures (from 6 - 10°F) are experienced in urban landscapes as a result of solar energy retention on constructed surfaces. Principle surfaces that contribute to heat island effect include streets, sidewalks, parking lots, and buildings. Also called "Urban Heat Island Effect."

G. Post-consumer recycled content: The percentage (by weight) of a reclaimed waste material contained in a product. A reclaimed waste material (e.g., newspaper, magazines, beverage containers, etc.) has already served a purpose to a consumer and has been diverted or separated from waste stream for recycling.

H. Pre-Consumer Recycled Content: Previously referred to as Post-industrial recycled content. The percentage (by weight) of a waste material obtained from industrial processes that is contained in a product.

I. Recycled material: A material that would otherwise be destined for landfill disposal but is diverted or separated from the waste stream, reintroduced as material feedstock, and processed into marketed end products.

J. Reused Material: Any item that is salvaged or reused without significant reprocessing as in a recycling process.

K. Source reduction: Minimization of waste at the start of a process or activity so that there is a reduced amount of waste to recycle or dispose. Also called precycling.

L. Volatile Organic Compound (VOC): A large family of chemicals based on carbon and hydrogen structures that vaporize at room temperature. VOCs are one type of indoor air contaminant. They are found in many indoor sources including common construction products and materials. Although thousands have been identified in indoor air, only a few are well understood and regulated. VOCs are considered unhealthful to humans - some individual VOCs are known or suspected human carcinogens or irritants to the eyes, nose, and mucous membranes. When released, VOCs can contribute to the formation of ground level ozone and smog. Formaldehyde and toluene are two examples of VOCs commonly found in construction materials.

M. Xeriscape: Quality landscaping that conserves water and protects the environment through its employment of seven principles: planning and design; soil analysis; appropriate plant selection; practical turf areas; efficient irrigation; use of mulches; and appropriate maintenance.

1.4 SUSTAINABILITY OBJECTIVES/GOALS

The City of Austin is committed to sustainability and expects the Project to reflect this commitment. The specific Sustainable (Design & Construction) goals for this project include:

1. Protection of the environment.
2. Limiting construction site area and disturbance of natural habitat and protection of trees and vegetation.
3. Reduction of waste created by construction activity through Source Reduction.
4. Increasing the use of materials and products with recycled content.
5. Chemically safe construction materials and pest management.
6. Construction materials that use less energy and create less pollution in manufacture, delivery, installation, renovation, and demolition.

1.5 SUBMITTALS

A. ***General***: Submit additional Sustainability submittal requirements included in other sections of the Specifications.

B. ***Sustainability submittals*** are in addition to other submittals. If submitted item is identical to that submitted to comply with other requirements, submit duplicate copies as a separate submittal to verify compliance with indicated requirements.

C. ***Sustainable Construction Action Plans***: Provide preliminary submittals within 30 calendar days of date established for the Notice to Proceed indicating how the following requirements will be met.

1. Construction & Demolition Waste Management Plan complying with Division 1 Section 01505 "Construction Waste Management."

D. ***Sustainable Construction Progress Reports***: Concurrent with each Application for Payment, submit reports comparing actual construction and purchasing activities with Action Plans for the following:

1. Waste reduction progress reports complying with Division 1 Section 01505 "Construction & Demolition Waste Management and Disposal."
2. Salvaged and refurbished materials.

E. ***Sustainability Documentation Submittals***:

1. Comply with Division 1 Section 01505 "Construction Waste Management."

1.6 QUALITY ASSURANCE

A. Sustainability Coordinator: Engage a responsible person on the construction team who is familiar with Sustainable practices and procedures. The Coordinator may also serve as the Waste Management coordinator.

PART 2 – PRODUCTS – Not Used

PART 3 – EXECUTION

3.1 SITE DISTURBANCE

A. Special Site Practices:

1. Construction Activity Pollution Prevention: Comply with City of Austin standard requirements.
2. Protect and restore natural vegetation per Division 1 sections and plans.
3. Replace any removed or destroyed vegetation with equivalent species that are within City guidelines for native and adaptive plants.

4. Restrict construction activity only to defined site limits per plans and avoid activity and practices that would adversely affect environment, property, soils, vegetation and water courses.

3.2 CONSTRUCTION WASTE MANAGEMENT

A. Comply with Division 1 Section 1505 "Construction Waste Management."

END SECTION 01352.5

CONSTRUCTION EQUIPMENT EMISSIONS REDUCTION PLAN
Section 01353

1. GENERAL

1.1. RELATED DOCUMENTS

A. This Section applies to Drawings and all provisions of Contract.

1.2. SUMMARY – CONSTRUCTION EQUIPMENT EMISSIONS PLAN

A. The OWNER, as part of the Council Resolution No. 20100211-019, has decided to take steps to reduce emissions associated with construction process including Nitrogen Oxides (NOx), particulate matter and greenhouse gas. Construction activity is a source of large quantities of particulate matter and ozone forming Nitrogen Oxides that adversely affect the health of our community and the natural environment.

B. The CONTRACTOR shall employ practices and take actions that reduce emissions from NOx, particulate matter (black soot) and greenhouse gases resulting from activities associated with new construction and demolition Projects.

C. The CONTRACTOR shall maximize the use of equipment and vehicles with advanced emission controls in support of the City's goals, utilizing equipment that meets defined EPA emissions standards.

1.3. DEFINITIONS

A. "Construction Equipment" means equipment powered by an internal combustion engine and used for performing or otherwise advancing the Work on the Project, other than motor vehicles intended for use on public highways and registered pursuant to Section 502.002 of the Texas Transportation Code.

B. The list of applicable Construction Equipment includes, but is not limited to excavators, backhoes, loaders, bulldozers, graders, rock saws, generators, and other similar equipment.

C. "EPA" means the United States Environmental Protection Agency.

D. "Low-Use Equipment" means any piece of construction equipment which is used for less than ten (10) hours per week on site for a single construction contract.

E. "Greenhouse Gases" are emissions that absorb and emit radiation within the atmosphere. Greenhouse Gases can be one or a combination of, these gases: carbon dioxide, methane, nitrous oxide and three groups of fluorinated gases (sulfur hexafluoride, hydro fluorocarbons, and perfluorocarbons)

1.4. REQUIREMENTS – Not Used

1.5. SUBMITTALS

A. CONSTRUCTION EQUIPMENT EMISSIONS REDUCTION PLAN:

1. The CONTRACTOR agrees to prepare a draft Emissions Reduction Plan (referred to as PLAN) prior to start of construction. This PLAN shall include an inventory report

containing identifying data for each piece of equipment to be used on the worksite and shall include the following:

- Vehicle/Equipment: Make & Model Year
- Vehicle/Equipment: Engine Make & Model Year
- Vehicle/Equipment: Fuel Type
- Vehicle/Equipment: Expected gallons or hours used for project duration

a) The OWNER will provide Emissions Reduction Toolkit to help the CONTRACTOR in preparation of the PLAN and inventory.

2. The CONTRACTOR shall develop a list of strategies to be used in this Project in order to reduce emissions from NOx, particulate matter and greenhouse gas (CO_2 equivalent). Once prepared, the agreed upon strategies shall be incorporated into the PLAN. The PLAN will then be signed by the CONTRACTOR and made ready for implementation. Implementation progress will be reviewed once a month in regularly scheduled project progress meetings. The PLAN may be modified during construction if changes are made to the Project, but adjustments shall be approved by the OWNER prior to implementation.

3. This PLAN may be used by the Owner's Representative or Inspector to conduct site inspections and/or verify compliance with specification elements.

4. If additional equipment is brought on-site after construction begins, the Contractor shall provide this same inventory information to the Owner's Representative for the new equipment on or before the day it begins work on-site. All additional equipment shall conform to the PLAN.

5. Reports shall be provided for all equipment used on-site.

B. EQUIPMENT EMISSIONS CLOSEOUT DOCUMENTATION:

1. Submit the following prior to final payment:

a) Record of changes made to the original PLAN and reasons.

b) Provide a summary and documentation of strategies used and estimated reductions in fuel & emissions.

c) Provide documentation of amount and % of alternative fuel used.

2. PRODUCTS

Not used

3. EXECUTION

3.1. GENERAL

A. Implement the submitted PLAN. Provide personnel, documentation, equipment, signage, transportation, and other items as required to implement the PLAN during the entire duration of the Contract.

3.2. EQUIPMENT EMISSIONS PLAN IMPLEMENTATION

A. Plan Coordinator (Could be same as superintendent): Designate an on-site person responsible for instructing workers on the Owner's intent to reduce emissions, overseeing implementation and documenting results of the PLAN for the Project.

B. Plan Review: Review the PLAN in monthly progress meeting and include comments in the meeting notes.

C. Instruction: Provide on-site instructions to all subcontractors of emissions reduction methods to be used by all parties for the appropriate activities of the Project.

D. Discuss Owner's goals and requirements at the following meetings:

1. Pre-bid conference.

2. Pre-construction conference.

3. Progress meetings (monthly).

3.3 EQUIPMENT EMISSIONS REDUCTION TOOLKIT

A. Equipment Emissions Reduction Toolkit available at:

1. Website: (http://austintexas.gov/department/capital-improvement-program)

2. City of Austin Public Works Department, Project Management Division, One Texas Center, Suite 900

3. Construction Job Site Office (after contract award)

B. Equipment Emissions Reduction Toolkit consists of:

1. A list of Construction Equipment Emissions Reduction Strategies

2. EPA fuel savings calculator by idling reductions

3. Posting of Anti-idling signs

4. Memorandum of Agreement by Local Area Governments

5. Equipment Inventory Form

3.4 A LIST OF EQUIPMENT EMISSIONS REDUCTION STRATEGIES

The following are suggested emissions reduction strategies and references. As per the specification section 01353, 1.5 Submittals, the CONTRACTOR shall develop a list of strategies to be used in this Project at the start of construction.

C-1 Anti-Idling Strategies:

1. Implement and enforce anti-idling practices for all equipment and vehicles on and adjacent to the site and associated with the project. City will provide a construction site sign and stickers for vehicles and equipment. (http://www.engineoff.org/)

2. Limit all idling of project associated vehicles and equipment operations to five (5) minutes unless the idling is applicable to one or more of the following exceptions:

a) Idling is being used for emergency response purposes;

b) Idling is necessary for component of mechanical operation, maintenance, or diagnostic purposes; or

c) Idling is for the health or safety of the equipment operator.

3. Provide education to all staff, vendors and subcontractors about emissions hazards and anti-idling practices and encourage use of EPA calculator for fuel savings.

4. To the extent possible, do not stop or idle haulage trucks directly under tree limbs and foliage overhanging the street along the haul route. Further avoid such damage from truck exhaust by means of exhaust diversion devices to redirect or diffuse exhaust from being directed in a concentrated manner to tree limbs and foliage.

5. Avoid vehicle loitering or queuing outside or inside the gates of the work area to minimize degradation of localized air quality.

   (http://data.capcog.org/air-quality/engineoff/AntiIdlingBrochure(2).pdf)

   (http://data.capcog.org/air-quality/engineoff/template-1/HowtoOrderSign.html)

   (http://data.capcog.org/air-quality/engineoff/smartwaycalculator.xls)

   (http://austintexas.gov/airquality/)

C-2 Alternative Fuels:

6. Utilize **alternative fuels** including, Texas LED Compliant B20 (or higher) biodiesel, Compressed Natural Gas (CNG), propane and electric. (Refer to EPA Energy Policy Act for full list).

7. Avoid unnecessary fuel use by providing on-site fuelling for alternate fuels.

   (http://www.tceq.texas.gov/airquality/mobilesource/txled/cleandiesel.html)

   (http://www.eere.energy.gov/cleancities)

   (http://lonestarcfa.org)

C-3 Vehicle/Equipment Improvements:

8. Eliminate use of vehicles in tier 0 and 1 categories per EPA and rent or purchase tier 2 and 3 or (4) compliant vehicles.

9. It is recommended that CONTRACTOR takes advantage of the **Texas Emission Reduction Plan (TERP)** grant incentives to upgrade (replace or repower) vehicles with retrofitted emission reduction technologies. (http://www.tceq.texas.gov/airquality/terp/index.html) or (www.terpgrants.com)

10. Utilize **battery powered and/or solar powered equipment** where available. This strategy can be combined with anti-idling strategies by using this technology for sign boards. (evtransportal.org/dieselengineidlereduction.pdf)

C-4 Maintenance Program:

11. Establish a preventative **maintenance program** addressing issues including but not limited to, fuel use, air emissions, tire pressure, smoke from exhaust and noise.

12. Make all efforts to **prevent oil/fuel spillage** on to site surfaces.

C-5 Resource Management:

13. Utilize equipment companies that are located closest to the construction site.

14. Store equipment on site during construction use or arrange for closest overnight storage including **temporary use of the Right of Way** if possible.

15. To the extent possible, CONTRACTOR shall maximize use of **local and regional materials** to reduce transportation emissions.

16. CONTRACTOR shall maximize **salvage and reuse** of appropriate on-site materials. (http://www.usgbc.org/ShowFile.aspx?DocumentID=1095)

17. To the greatest extent possible, stage equipment and vehicles away from, and minimize operation near, sensitive receptors including, but not limited to, operable windows, fresh air intakes, hospitals, schools, licensed day care facilities, residences and areas where people congregate.

END

CONSTRUCTION PHOTOGRAPHY & VIDEOS
Section 01380

1. GENERAL

CONTRACTOR shall be responsible for the production of pre-construction, construction progress and post-construction photographs as provided herein. Owner's Representative may also designate additional subjects for photographs in addition to the general guidelines identified below.

2. QUALITY

All photographs must be produced by a competent photographer and shall be digital (6 Mega-Pixel) date-stamped color photography of commercial quality. All CONTRACTOR-generated photographs must be stored in a .jpeg file format and digitally annotated with a description and location of view. Construction progress photographs shall be submitted with the CONTRACTOR's progress payment and all post-construction photographs shall be submitted at the completion of each Work Order or with the CONTRACTOR's progress payment following completion of the Work Order. All photo submittals shall be on CD or DVD format and each CD/DVD shall be labeled with the Work Assignment name, name of CONTRACTOR, and submittal date.

3. VIEWS AND QUANTITIES

3.1. PRE-CONSTRUCTION PHOTOGRAPHS
STREET, RIGHTS-OF-WAY OR WATER/WASTEWATER/STORMWATER PROJECTS

All pre-construction photographs must be submitted within ten (10) calendar days of the Notice to Proceed. Pre-construction photographs must be taken at sufficient intervals to be able to carefully document the pre-construction conditions of the Work, but in no case less than 100 foot intervals along the street, right-of-way, drainage easement or water/wastewater line route before commencement of Work. Each photograph location shall be taken from a minimum of two (2) views (one forward station view and one backward station view along the street, drainage, easement or pipeline route) within the limits of construction. Particular attention must be devoted to pre-existing damage to structures; landscape features, streets, curbs, sidewalks, driveways, signs, mailboxes, retaining walls, MSE walls, etc. shall be documented. An identifier such as houses or businesses address/ signs, property numbers, mail boxes, landscaping, etc. shall be included in each view for ease of later identification. At a minimum, Pre-construction photographs must be taken of the following views:

- The entire street ROW
- The entire easement width and length (both permanent and temporary)
- All curb lines (both sides of street) – all pre-existing curb damage not called for replacement within the Work and shall include major cracks
- All driveways, steps, and curbs and curb ramps (both sides of street)
- Fence and gate conditions
- Trees, ornamental shrubs, plantings/planter boxes and evidence of irrigation features
- Other privately or publically owned features or facilities that might be disturbed by the construction

- Prominent utility features, such as: guy wires, poles, signs, valves, fire hydrants, meters, pull boxes, etc.
- Streams and stream banks within the limits of construction
- Other significant or prominent features in order to protect the OWNER and CONTRACTOR following construction (e.g. close up photographs of pre-existing broken curbs, cracked/failed pavement, damaged adjacent retaining walls, etc.)
- Views of structures, both inside and adjacent to the ROW/easement in areas where CONTRACTOR will be working within five (5) feet of said structure
- Other views as requested by the OWNER

3.2 CONSTRUCTION PROGRESS PHOTOGRAPHS

STREET, RIGHTS-OF-WAY OR WATER/WASTEWATER/STORMWATER PROJECTS

Construction Progress photos must be taken at least monthly showing the progress of the work for the month. Construction photographs of the same views taken during pre-construction photography must be taken during the progress of the Work and shall be submitted monthly with the Contractor's monthly progress payment application.

Progress photos must also be taken to depict the work accomplished with each Work Order that includes:

- Work not yet covered up
- The beginning of installation of major items of equipment
- After installation of major items of equipment
- Other significant construction activities.

All photos shall be submitted with the CONTRACTOR'S progress payment application.

3.3 POST CONSTRUCTION PHOTOGRAPHS

Post-construction photographs must be taken of the same views taken during pre-construction photography to fully document the completed project. Post-construction photographs must be taken after cleanup and site restoration.

End

PART 1 - GENERAL

1.1 Related Documents:

Drawings and general provisions of Contract, including General Conditions, Section 00700,and Supplemental General Conditions, Section 00810, and Division 1 requirements.

PART 2 - PRODUCTS (NOT USED)

PART 3 - EXECUTION

3.1 Water for Construction

All water required for and in connection with the Work to be performed shall be furnished by and at the expense of the CONTRACTOR through meters installed on hydrants, except for water used in the "disinfection of potable water lines" process per Specification 510.3(29). All water used in the disinfection process shall not be metered, but rather shall be measured by calculation. Such water use does not require a meter, but a double-check valve assembly is required when connecting to a fire hydrant or a City main. CONTRACTOR shall submit a written plan for the disinfection process for review and approval by OWNER prior to commencing Work. The written plan shall include the CONTRACTOR's plan for final flushing and discharge of chlorinated water, and shall specify the quantities of potable water that will be required for the procedure and dosage plan proposed by the CONTRACTOR. Water used in the disinfection process shall be supplied by the OWNER through hydrants or connection through a City main at no charge to the CONTRACTOR for the initial disinfection procedure up to the quantities agreed to in the written plan for the disinfection process. Should the initial disinfection procedure fail to produce acceptable bacteriological sample test results, the cost of water at standard rates used for subsequent disinfection procedures shall be the responsibility of the CONTRACTOR with quantities determined through calculations.

For all water required for and in connection with the Work to be performed other than for the disinfection process, water and meters will be available from OWNER at standard rates. All costs for obtaining a water meter shall be the responsibility of the CONTRACTOR. The CONTRACTOR shall contact the Austin Water Utility and arrange to pick up the meter. CONTRACTOR shall install a double-check valve assembly on the fire hydrant between the hydrant and the meter, to prevent backflow in the event of pressure failure. CONTRACTOR shall supply all necessary tools, hose and pipe, and shall make necessary arrangements for securing and transporting such water and shall take water in such a manner, and at such times, that will not produce a harmful drain or decrease of pressure in the OWNER's water system. It shall be the CONTRACTOR's responsibility to make arrangements with the Austin Water Utility for the metering and reporting of the amount of water used. Water shall not be used in a wasteful manner. Standard hydrant wrenches shall be used for opening and closing of fire hydrants. In no case shall pipe wrenches be used for this purpose. Temporary lines shall be removed when no longer required.

"If applicable, after the installation of the City of Austin's water meter(s) for the Project, the CONTRACTOR has the option to utilize the water available from this service at the CONTRACTOR's expense. An adjustment to the Contract amount will be made by Change Order at the end of the Project for the costs incurred by the City of Austin for the water."

3.2 Sanitary Facilities

CONTRACTOR shall furnish temporary sanitary facilities at the site, as provided herein, for the needs of all construction workers and others performing Work or furnishing services on the Project.

Sanitary facilities shall be of reasonable capacity, properly maintained throughout the construction period, and obscured from public view to the greatest practical extent. If toilets of the chemically treated type are used, at least one toilet shall be furnished for each 20 employees. CONTRACTOR shall enforce the use of such sanitary facilities by all personnel at the site.

3.3 Protection of Public and Private Property

CONTRACTOR shall protect, shore, brace, support and maintain all underground pipes, conduits, drains, and other underground construction uncovered or otherwise affected by the CONTRACTOR's operations. All pavement, surfacing, driveways, curbs, walks, buildings, utility poles, guy wires, fences, and other surface structures affected by construction operations, together with all sod and shrubs in yards, parkways, and medians, shall be restored to their original condition, whether within or outside the easement/right-of-way. All replacements shall be made with new materials.

CONTRACTOR shall be responsible for all damage to streets, roads, curbs, sidewalks, highways, shoulders, ditches, embankments, culverts, bridges, or other public or private property, which may be caused by transporting equipment, materials, or men to or from the Work, whether by him or his Subcontractors. CONTRACTOR shall make satisfactory and acceptable arrangements with the owner of, or the agency having jurisdiction over, the damaged property concerning its repair or replacement or payment of costs incurred in connection with the damage.

All fire hydrants and water control valves shall be kept free from obstruction and available for use at all times.

3.4 Tree and Plant Protection

All trees and other vegetation which must be removed to perform the Work shall be removed and disposed of by the CONTRACTOR; however, no trees or cultured plants shall be unnecessarily removed unless their removal is indicated on the Drawings. All trees and plants not removed shall be protected against injury from construction operations.

No tree shall be removed outside of permanent easement(s), except where authorized by the E/A. Whenever practicable, CONTRACTOR shall tunnel beneath trees in yards and parking lots when on or near the line of trenching operations. Hand excavations shall be employed as necessary to prevent injury to trees. Care shall be taken with exposed roots, unearthed during construction, so that roots do not dehydrate causing tree damage.

Trees considered by the E/A to have any significant effect on construction operations are indicated on the Drawings and those which are to be preserved are so indicated.

CONTRACTOR shall take extra measures to protect trees designated to be preserved, using methods shown on the Drawings and as specified in Standard Specification Item No. 610S "Preservation of Trees and other Vegetation".

3.5 Security

CONTRACTOR shall be responsible for protection of the site, and all Work, materials, equipment, and existing facilities hereon, against vandals and other unauthorized persons.

No claim shall be made against OWNER by reason of any act of an employee or trespasser, and CONTRACTOR shall make good all damage to the OWNER's property resulting from CONTRACTOR's failure to provide security measures as specified.

Security measures shall be at least equal to those usually provided by OWNER to protect existing facilities during normal operations, and shall also include such additional security fencing, barricades, lighting, and other measures as required to protect the site. When required, the CONTRACTOR shall provide a security plan to the OWNER for review as to appropriateness of the security measures proposed.

3.6 Access

CONTRACTOR shall establish and maintain temporary access to various parts of the site as required to complete the Project. Such access shall be available for the use of all others performing Work or furnishing services in connection with the Project.

3.7 Parking

CONTRACTOR shall provide and maintain suitable parking areas for the use of all construction workers and others performing Work or furnishing services in connection with the Project, as required, to avoid any need for parking personal vehicles where they may interfere with public traffic, the OWNER's operations, or construction activities.

3.8 Dust Control

Dust Control during construction of this Project shall conform to Standard Specifications Item No. 220S, “Sprinkling for Dust Control". No direct payment will be made for dust control. Dust Control shall be considered subsidiary work relating to various Bid items of the Contract.

3.9 Temporary Drainage Provisions

CONTRACTOR shall be responsible for providing for the drainage of stormwater and such water as may be applied or discharged on the site in performance of the Work. CONTRACTOR shall obtain E/A approval for temporary drainage facilities which will handle, carry through, or divert around his Work all drainage flow, including storm flow and flows created by construction activity, to prevent silting of waterways or flooding damage to the property and adjacent property.

3.10 Erosion Control

CONTRACTOR shall prevent erosion of soil on the site and adjacent property resulting from his construction activities. Effective measures shall be initiated prior to the commencement of clearing, grading, excavation, or other operations which will disturb the natural protection.

CONTRACTOR shall use controls found in "Environmental Criteria Manual" or developed from successful techniques elsewhere as approved by E/A. Siltation and/or sedimentation controls shall include dams, berms, and dikes as recommended in the "Environmental Criteria Manual".

3.11 Pollution Control

CONTRACTOR shall prevent the pollution of drains and watercourses by sanitary wastes, sediment, debris and the substances resulting from construction activities. No sanitary wastes will be permitted to enter any drain or watercourse. No sediment, debris or other substance will be permitted to enter sanitary sewers and reasonable measures shall be taken by CONTRACTOR to prevent such materials from entering any drain or watercourse.

CONTRACTOR shall observe the rules and regulations of the State of Texas and agencies of the U.S. Government prohibiting the pollution of any lake, stream, river, or wetland by the dumping of any refuse, rubbish, dredge material, or debris therein.

CONTRACTOR is specifically cautioned that disposal of materials into any water of the State must conform to the requirements of the Texas Commission on Environmental Quality (TCEQ), and any applicable permit from the U.S. Army Corps of Engineers.

3.12 Noise Control

CONTRACTOR shall comply with the City of Austin’s Noise Ordinance. CONTRACTOR shall take reasonable measures to avoid unnecessary noise. Such measures shall be appropriate for the normal ambient sound level in the area during working hours. All construction machinery and vehicles shall be equipped with practical sound-muffling devices, and operated in a manner to cause the least noise consistent with efficient performance of the Work.

3.13 CIP Sign

CIP Signs are not required for Work performed under this Contract.

3.14 Fences

All existing fences affected by the Work shall be maintained by the CONTRACTOR until completion of the Work. Fences which interfere with construction operations shall not be relocated or dismantled until written permission is obtained from the owner of the fence, and the period the fence may be left relocated or dismantled has been agreed upon. Where fences must be maintained across any construction easement, adequate gates shall be installed. Gates shall be kept closed and locked at all times when not in use.

Upon completion of the Work across any tract of land, CONTRACTOR shall restore all fences to preconstruction, or to a better, condition and to their preconstruction location.

3.15 Mail Boxes

CONTRACTOR shall remove, reset temporarily, and relocate permanently all mail boxes that are within construction site limits conforming to requirements of United States Postal Service. Mailboxes shall not be laid on the ground, but shall be temporarily reset the same day as removed. Payment for removing and resetting of mail boxes will not be paid for directly, but will be considered subsidiary to the various Bid items. Any damage to mail boxes or posts shall be the responsibility of the CONTRACTOR.

3.16 Emergency Facilities

Free access shall be maintained at all times to fire lanes and emergency and utility control facilities such as fire hydrants, fire alarm boxes, police call boxes, and utility valves, manholes, junction boxes, etc. In the event that it is necessary to make one of these facilities temporarily inaccessible, CONTRACTOR shall obtain approval of such action and schedule of Work from the OWNER. CONTRACTOR shall also provide at least 24 hours prior notice to the Fire Department, Police Department, and City Department governing the affected utility. The same Department(s) shall be promptly notified by the CONTRACTOR when such facilities are placed back in unobstructed service.

3.17 Notification of Owners

Unless otherwise indicated, the OWNER will notify property owners abutting the right-of-way of impending construction. The CONTRACTOR shall exercise diplomacy and tact with individual property owners.

3.18 Maintenance of Traffic

CONTRACTOR shall conduct his Work to interfere as little as possible with public travel, whether vehicular or pedestrian. Whenever it is necessary to cross, obstruct, or close roads, driveways, and walks whether public or private, the CONTRACTOR shall provide and maintain suitable safe bridges, detours or other temporary measures to accommodate public and private travel, and shall provide reasonable notice to owners of private drives before interfering with them. Such maintenance of traffic will not be required when CONTRACTOR has obtained written permission from the owner and the tenant of the private property, or from the authority having jurisdiction over public property involved, to obstruct traffic at the designated point. A copy of the initial written permission shall be provided to the Owner's Representative.

Safety and conveyance of traffic shall be regarded as prime importance. Unless otherwise directed, all portions of streets associated with this Project shall be kept open and provided a dust free, smooth and comfortable ride to traffic. It shall be the responsibility of the CONTRACTOR to ensure that two-way traffic may safely bypass the construction site and that access is provided to abutting private property. In making open cut street crossings, the CONTRACTOR shall not block more than one-half of the street at one time without approval of the OWNER. Whenever possible, CONTRACTOR shall widen the shoulder on the

opposite side to facilitate traffic control. Temporary surfacing shall be provided as necessary on shoulders.

Prior to beginning Work, CONTRACTOR shall designate, in writing, a competent person who will be responsible and available on the Project site, or in the immediate area, to ensure compliance with the traffic control plan. CONTRACTOR shall provide documentation to demonstrate the sufficient training in Traffic Control for his competent person. Owner will designate a qualified person to observe implementation and who will have authority to assure compliance with the traffic control plan.

The CONTRACTOR shall perform the necessary cleanup and finishing immediately after all or a portion of the Work is completed. When the Work includes paving operations, the entire site shall be kept clean to facilitate placement of required traffic control devices. Temporary and permanent striping lay-out shall be approved by the Transportation Department prior to placement, when included in the Work.

Unless directed otherwise by the OWNER, OWNER will provide engineered traffic control plans to the CONTRACTOR on an as-needed basis, depending on the traffic control requirements for each Work Order. In the event that standard City of Austin traffic control details can be used for a given Work Order in lieu of engineered plans, the CONTRACTOR will be responsible to determine which standard details apply, and shall obtain all necessary right-of-way permits as needed.

1. Detours

Where indicated on the traffic control plan CONTRACTOR shall erect and maintain detours around construction activities. Should CONTRACTOR desire to propose a detour, not already included in the traffic control plan, it shall be his responsibility to prepare a revised traffic control plan showing the detour, and obtain approval of the revised traffic control plan from the Transportation Department, prior to implementation of the detour. The Transportation Department has final authority as to the acceptability of any proposed revisions to the traffic control plan. The CONTRACTOR shall bear all costs for revising the traffic control plan and for maintaining the proposed detour.

2. Barricades and Lights

CONTRACTOR shall place and maintain in good condition, standard barricades at each end of the Project and at other locations where traffic is rerouted or blocked from using regular traffic lanes. Barricades and warning signs shall be in accordance with the Texas Manual on Uniform Traffic Control Devices (MUTCD) and City of Austin Standard Specification Item No. 803S, “Barricades, Signs and Traffic Handling”. Signs, barricades, and warning devices informing the public of construction features will be placed and maintained by the CONTRACTOR, who shall be solely responsible for their maintenance. The decision to use a particular device at a particular location as indicated in the traffic control plan or as determined by the CONTRACTOR, shall be the sole responsibility of the CONTRACTOR.

All open trenches and other excavations shall have suitable barricades, signs, and lights to provide adequate protection to the public. Obstructions, such as material piles and equipment shall be provided with similar warning signs and lights.

All barricades and obstructions shall be illuminated with warning lights from sunset to sunrise. Material storage and conduct of the Work on, or along side, public streets and highways shall cause a minimum obstruction and inconvenience of the traveling public.

3.19 Required Job Site Postings and Notices

CONTRACTOR shall post the following postings and notices in English and Spanish at one or more conspicuous locations on the job site. In the case of Projects with multiple sites, the notices and postings must be displayed at each site. In the case of Projects that do not have a job shack or other temporary facility on the site, CONTRACTOR shall post all notices on a temporary bulletin board. Other special conditions are noted below.

Required for all Projects	
Poster	Available at:
Baseline Schedule for Project identifying when all subcontractors will be used	N/A (as required under Section 00700, paragraph 2.4.2.1.)
Wage Rates as required under Section 00830.	Section 00830BC and/or Section 008300HH
City of Austin Wage Contact posters	Provided at Pre-Construction meeting (English and Spanish)
City of Austin Equal Employment Opportunity posters	http://austintexas.gov/department/wage-compliance (English and Spanish)
Texas Commission on Environmental Quality "Construction Site Notice" form, if applicable, as required or the required TPDES information	http://www.tceq.state.tx.us/assets/public/permitting/waterquality/attachments/stormwater/txr152d2.pdf (Option 1 – as required under Section 00810, 6.7.4.2 N/A (Option 2 – as required under Section 00810, 2.6.7.4.3)
OSHA poster "Job Safety and Health: It's the Law"	http://www.osha.gov/Publications/osha3165.pdf (English) http://www.osha.gov/Publications/osha3167.pdf (Spanish)
City of Austin Rest Break Ordinance Signs	http://austintexas.gov/department/wage-compliance (English and Spanish) As required to be posted in English and Spanish under Ordinance No. 20100729-047
Texas Payday Law Poster	http://www.twc.state.tx.us/ui/lablaw/ll10.pdf (English) http://www.twc.state.tx.us/ui/lablaw/ll10s.pdf (Spanish)
Texas Workers Compensation notice that the employer does or does not carry Workers Compensation insurance	Does not carry Workers Compensation Insurance: http://www.tdi.state.tx.us/forms/dwc/notice5.pdf (English) http://www.tdi.state.tx.us/forms/dwc/notice5s.pdf (Spanish) Does carry Workers Compensation Insurance: http://www.tdi.state.tx.us/forms/dwc/notice6.pdf (English) http://www.tdi.state.tx.us/forms/dwc/notice6s.pdf (Spanish)
TWC Employer's Notification of the Ombudsman Program to Employees	http://www.oiec.state.tx.us/documents/Employer_Notice_of_O.pdf (both versions)
DOL – The Uniformed Services Employment and Reemployment Rights Act (USERRA)	http://www.dol.gov/vets/programs/userra/USERRA_Private.pdf
EEOC Equal Employment Act and the Americans with Disabilities Act (ADA)	http://www.dol.gov/ofccp/regs/compliance/posters/pdf/eeopost.pdf (English) http://www.dol.gov/ofccp/regs/compliance/posters/pdf/eeosp.pdf (Spanish)
Fair Labor Standards Act (FLSA) Minimum Wage Poster	http://www.dol.gov/whd/regs/compliance/posters/flsa.htm (English) http://www.dol.gov/whd/regs/compliance/posters/flsaspan.htm (Spanish)
If applicable: Employee Rights for Workers with Disabilities/Special Minimum Wage Poster –	http://www.dol.gov/whd/regs/compliance/posters/disabc.pdf http://www.dol.gov/whd/regs/compliance/posters/disabspanc3p.pdf

Employment Standards	
"Your Rights Under the Family and Medical Leave Act (FLMA)"	http://www.dol.gov/whd/regs/compliance/posters/fmlaen.pdf (English) http://www.dol.gov/whd/regs/compliance/posters/fmlasp.pdf (Spanish)
Title VI Rights Poster	http://austintexas.gov/department/wage-compliance
Additional Postings Required for Federally Funded Projects	
"Employee Rights Under the Davis-Bacon Act"	http://www.dol.gov/whd/regs/compliance/posters/fedprojc.pdf (English) http://www.dol.gov/whd/regs/compliance/posters/davispan.pdf (Spanish)
Applies to USDOT/FHWA funded projects: "Notice of False Statements Concerning Highway Projects"	http://www.mdt.mt.gov/publications/docs/forms/dbe/eeo_board/false_statements.pdf (as required in Section 00810A Standard Federal-Aid Assurances)
Applies to USDOT/FHWA funded projects; "Contractors EEO Policy"	N/A (as required in Section 00810A Standard Federal-Aid Assurances)

END

CONSTRUCTION AND DEMOLITION WASTE MANAGEMENT

Section 01505

Non-Building Projects – Water / Wastewater and Street Reconstruction

PART 1 – GENERAL

1.1 RELATED DOCUMENTS

1. Division 01 Section 01200 "Project Meetings"
2. Division 01 Section 01352 “Sustainable Construction Requirements”
3. Division 01 Section 01500 “Temporary Facilities”

1.2 SUMMARY

A. The Owner has established that the Project shall minimize the creation of construction and demolition waste on the Project site and shall recycle and/or salvage non-hazardous construction, demolition, and land clearing debris to divert waste from Landfills. See 1.5 Waste Management Goals.

1. All profits resulting from salvaging and recycling shall go to the Contractor.
2. Where there is little cost difference between recycling/salvaging and land-filling of items, the Contractor is directed to recycle/salvage.

B. Hazardous materials are an exception to this Section. Comply with applicable requirements of Local, State and Federal regulations.

C. This Section includes administrative and procedural requirements for recycling, salvaging and disposing of non-hazardous demolition and construction waste

1.3 REFERENCES

A. The standards listed below form a part of this Section to extent referenced. Standards are referred to in the text by basic reference only.

1. Sustainable Building Sourcebook – Austin Energy Green Building:www.austinenergy.com/Energy%20Efficiency/Programs/Green%20Building/Sourcebook/constructionWasteManagement.htm

2. Resource Exchange Network for Eliminating Waste (RENEW), TCEQ (MC-112), Biannual catalog lists materials available and wanted; serves Texas and surrounding states; lists are posted on the Internet: http://www.tceq.state.tx.us/assistance/P2Recycle/renew/renew.html

3. Recycle Texas Online, A service of the Texas Commission on Environmental Quality. Contains information on about 1000 businesses and local governments handling materials from Texas. Organizations' information is self-reported and listings are free of charge. www.tceq.state.tx.us/assistance/P2Recycle/rtol/rtol.html

1.4 DEFINITIONS

A. Chemical Waste: Includes petroleum products, bituminous materials, salts, acids, alkalis, herbicides, pesticides, organic chemicals, and inorganic wastes.

B. Clean: Untreated, unpainted, not contaminated with oils, solvents, caulk, or other materials.

C. Disposal: Acceptance of solid wastes at legally permitted and operating facility for the purposes of land-filling.

D. Diversion: Avoidance of demolition and construction waste sent for disposal to landfill or incineration. Diversion does not include using materials for landfill, alternate daily cover on landfills, or materials used as fuel in waste-to-energy processes.

E. Hazardous Waste: Byproducts of society that can pose a substantial or potential hazard to human health or the environment when improperly managed, and possessing at least 1 of 4 of the following characteristics, or appearing on a special Environmental Protection Agency (EPA) list.

1. Ignitability.
2. Corrosivity.
3. Reactivity.
4. Toxicity.

F. Landfill: Authorized land waste disposal site that is located to minimize waste pollution from runoff and leaching.

G. Recycling: The process of sorting, cleansing, treating, and reconstituting solid waste and other discarded materials for the purpose of using the altered form. Recycling does not include burning, incinerating, or thermally destroying waste.

H. Return: To give back reusable items or unused products to vendors for credit.

I. Reuse: A strategy to return materials to active use in the same or a related capacity.

J. Salvage: To remove a waste material from the Project site to another site for resale or reuse by others.

K. Source Separation: The act of keeping different types of waste materials separate beginning from the first time they become a waste.

L. Toxic: Poisonous to living beings either immediately or after a long period of exposure.

M. Trash: Any product or material unable to be reused, returned, recycled, or salvaged.

N. Waste: Extra material or material that has reached the end of its useful life in its intended use. Waste includes all materials removed from the Project site to be land-filled, recycled, or salvaged for reuse. Pallets, containers, packaging and packing materials in which construction products are delivered to the Project site are considered waste materials.

1.5 WASTE MANAGEMENT GOALS

A. The Owner has established that as much as is economically feasible of the “waste” materials produced as a result of the Work, shall be employed, salvaged, reused, or recycled in order to minimize the impact of construction and demolition waste on landfills and reducing disposal costs.

B. Contractor shall employ and encourage practices that ensure the generation of as little waste as possible due to error, poor planning, breakage, mishandling, contamination, or other factors.

C. Contractor is responsible for knowing and complying with regulatory requirements, including but not limited to Federal, State and local, pertaining to legal disposal of all construction waste materials.

D. Contractor shall recycle and divert materials for secondary uses whenever economically feasible.

E. Acceptable methods of diversion include:
Recycling, reuse and salvage
Donation to nonprofit organizations
Removal from jobsite by staff or subcontractors for use (not disposal)
Return to supplier
Sale to organizations or individuals

F. The Contractor shall develop a Construction and Demolition Waste Management Plan of non-hazardous construction and demolition waste. The plan shall identify the materials to be diverted from disposal and define the materials to be separated on-site or off-site. Calculations can be done by weight or volume, but must be consistent throughout.

1.6 SUBMITTALS

A. ***Waste Management Plan:*** A Project-specific plan for the collection, transportation, and disposal of the waste generated at the construction site, shall be submitted for approval within 14 calendar days after notice to proceed, or prior to any waste removal, whichever occurs first. The approved Plan shall be distributed to all subcontractors and the owner and will not relieve the Contractor's responsibility for compliance with applicable environmental regulations.

An example template is included as "Appendix A" to this section.

1. The Waste Management Plan shall include the following:

a. Identify each type of waste material produced as a result of the Work on the Project Site.

b. Identify each type and quantity of demolished and waste material intended to be recycled, salvaged or reused.

c. Identify material separation requirements.

e. Identify location of temporary on-Site storage for recycled and reused materials.

f. Identify final destination means of transportation for each recycled and reused material.

h. Identify the name/phone number of the Contractor's on-site coordinator of the Waste Management Plan.

i. Indicate permit or license and the location of the municipal solid waste landfills and other disposal area(s) to be used.

j. List of materials that cannot be recycled or reused.

B. ***Construction Waste Management Closeout Documentation:*** Submit the following upon the completion of The Work and prior to final payment:

a. A Summary of Solid Waste Disposal and Diversion (refer example template "Appendix B") prepared and maintained through Project duration, demonstrating that 100% of all non-hazardous construction wastes were recycled, salvaged or disposed of properly and includes as a minimum the following information:

1. Dates

2. Materials Description and Quantity

3. Indicate whether recycled, salvaged, reused of sent to landfill for disposal.
4. Destination or Name and location of accepting facility.

b. Copies of all receipts, manifests, weight tickets, and other documentation that identify all materials recycled, salvaged, land-filled or incinerated.

PART 2 - PRODUCTS

Not used

PART 3 – EXECUTION

3.1 GENERAL

A. Implement the Waste Management Plan as approved by the City of Austin Project Manager. Provide handling, containers, storage, signage, transportation, and other items as required to implement Waste Management Plan during the entire duration of the Contract.

B. Satisfy the requirements outlined in Subsection 1.5, Waste Management Goals.

3.2 WASTE MANAGEMENT PLAN IMPLEMENTATION

A. Plan Coordinator: Designate an on-site party (or parties) responsible for instructing workers, overseeing implementation and documenting results of the Waste Management Plan for the Project.

B. Plan Distribution: Provide copies of the Waste Management Plan to the Contractor's superintendent, each Subcontractor, the Owner, and the Engineer.

C. Meetings: Include Construction Waste Management in progress meetings to maintain the Plan for achieving the owners waste management goals:

D. Carefully order materials to avoid over supply.

E. Protect materials from contamination during handling, storage and transport to meet the requirements of the accepting facilities.

F. Assign and label a specific area to facilitate separation of materials for potential recycling, salvage, reuse, return and disposal. This area shall be kept neat and clean and clearly marked in order to avoid contamination of materials.

3.3 RECYCLING REQUIREMENTS

A. Materials: In general the contractor is encouraged to recycle the following types of construction waste materials generated during the course of this project, that are not salvaged or reused:

a. Asphalt concrete pavement.

b. Concrete materials.

c. Metals, including the following.

i. Banding straps.
ii. Reinforcing steel.
iii. Iron.
iv. Steel pipe.
v. Galvanized steel pipe.

d. Clean dimensional lumber.

e. Wood crates and pallets.

f. Glass and glass containers.

g. Plastics.

h. Electrical wiring.

i. Cardboard, paper, and packaging.

j. Beverage containers.

B. Methods: The following recycling methods, or a combination of, may be used.

1. On-site separation: Each material to be recycled shall be separated at the Project site and delivered to the recycling markets or directly from the Project site.

   a. If on-site separation method is used, designate a specific area or areas to facilitate separation of materials for potential reuse, salvage, recycling, and return.

   b. Maintain recycling and waste bin areas neat and clean and clearly marked, both in Spanish and in English, in order to avoid co-mingling of materials.

   c. Protect materials from contamination.

2. Off-site separation: Materials to be recycled are delivered unsorted from the Project site to a materials recovery facility or transfer station where recyclable materials are separated from other waste.

   a. Contractor shall verify that the entity responsible for the off-site separation has a market for all materials required to be recycled from the Project site.

   b. The same Submittals procedures shall apply.

   c. Protect materials from contamination.

3.4 REUSE

A. Contractor is encouraged to reuse as many demolished and waste materials as possible.

B. Reuse of waste materials includes the following:

a. Salvaging materials scheduled for disposal.

b. Off-Site storage of waste materials for future reuse by Contractor on other projects.

c. Returning unused and reusable materials, packaging and pallets, to vendor.

e. Assemble designated reuse items in a single location safe from damage, for review and approval by the owner's representative.

3.5 SALVAGE

A. Salvage Guidelines:

1. The contractor is encouraged to salvage as many items as deemed economically possible, considering reduction of land filling fees and possible use by others.

2. Assemble potentially salvageable items in one area and donate or sell to the public after review by the City of Austin Project Manager.

3. All proceeds from the sale of salvaged items shall go to the contractor.

Appendix A. Sample Construction Waste Management Plan

Construction Waste Management Plan

Project:
Contractor:
Date:
Contact:
Phone:
Prepared by:

Diversion Goal: Recycle, reuse and/or salvage as much land-clearing and construction waste as is economically feasible.

I. Coordination and Training

a. Name of Contractor's representative responsible for CWM implementation & coordination.

b. Describe method(s) of waste recycling management – on-site and/or off-site.

c. Describe how Contractor's staff and subcontractors will be informed regarding proper recycling and separation procedures

d. Describe and/or show on an attached site map where the temporary waste material storage area(s) will be located, and how will contamination of separated waste materials will be prevented?

II. Waste Minimization

a. What waste minimization techniques will be employed during the construction phase?

_____
_____
_____
_____

b. Which employees and / or subcontractors will be involved with each technique?

_____
_____
_____
_____

III. Construction Waste Analysis (including site / land-clearing materials, as applicable)

a. ***Diverted Materials***: For each material anticipated to be reused or recycled (diverted from the landfill), provide information to complete the table below. (Note: Whenever possible, attempt to use or donate construction waste materials rather than recycling.)

Material or Item	Storage Method (roll-off, bin, area, on pallet, etc.)	Quantity estimate (no., linear ft., square ft., etc.)	Proposed Recipient

Add rows (or paper pages) as required

b. ***Landfill***: For construction phase trash and materials / items that will not be diverted, complete the following table:

Quantity estimate (weight or volume)	Number and size of roll offs anticipated	Proposed landfill site

Appendix B. Summary of Solid Waste Disposal and Diversion

Project name _____ Project Number _____
Contractor Name _____ License Number_____
Contractor Address_____

Solid Waste Material	**Recycled, Reused, salvaged or disposed**	**Date Material Disposed** or diverted	**Amount Disposed/ Diverted** (Ton or cubic yd.)	**Municipal Solid Waste Facility** (Name, address, Phone)	**Recycling/Reuse Facility** Name Address Phone	**Comment** (If disposed state why not diverted)
Vegetation						
Soil						
Trench spoils						
Rock						
Asphalt						
Concrete						
Metal						
Wood						
Debris						
Glass						
Trash						
Other						

Signature _____ Date _____

Page / of / total pages

END

PART 1 – GENERAL

1.1 Related Documents:

Drawings and general provisions of Contract, including General Conditions, Section 00700, and Supplemental General Conditions, Section 00810, and Division 1 requirements.

PART 2 - PRODUCTS (NOT USED)

PART 3 - EXECUTION

3.1 General

CONTRACTOR shall maintain reasonable local vehicular and pedestrian dust free traffic, including use of driveways, to proceed safely with minimum inconvenience, except during actual construction operations. CONTRACTOR provided flaggers shall assist traffic when a street is operating under a single lane. Two-way traffic shall be maintained at all other times unless otherwise authorized by Owner.

CONTRACTOR shall provide, at the work zone location during temporary traffic control installation, a designated Competent Traffic Control Person to ensure compliance with the traffic control plans and the provisions of the Contract. Training Certificates for the designated Competent Person shall be provided with submittals at the Precon. Training certificates for competent persons shall be good for four (4) years from the date of training. After such time the competent person must show that additional training or re-certification has been completed to maintain competent person status.

CONTRACTOR shall maintain a smooth and safe ride for traffic by placing steel plates with Asphaltic concrete berms, temporary fill or bridging and temporary surfacing with cold or hot-mix Asphaltic concrete paving in accordance with applicable City Standards.

Sidewalks shall not be obstructed, except by special permission of Owner or E/A. Access to private dwelling and to commercial establishments shall be provided at all times.

CONTRACTOR shall plan and execute his operations in a manner that will cause a minimum interference with traffic. The CONTRACTOR shall place and maintain in good condition, standard barricades at each end of the Project and at other locations where traffic is rerouted or blocked from using regular traffic lanes. Barricades and warning signs shall be in accordance with Texas Manual on Uniform Traffic Control Devices (MUTCD) and the City of Austin Transportation Criteria Manual.

Signs, barricades and warning devices informing public of construction features shall be placed and maintained by the CONTRACTOR who shall be solely responsible for their maintenance.

Unless otherwise specified elsewhere in Division 1, neither explosives nor blasting shall be permitted on this Project.

3.2 Traffic Control

3.2.1 It shall be the sole responsibility of the CONTRACTOR to furnish, install, maintain and remove barricades, detour signs, warning signs, lights and all regulatory traffic control devices of the size and type specified, at locations indicated, or as directed or approved by the OWNER in accordance with the Texas Manual on Uniform Traffic Control Devices, (MUTCD), Part VI, Traffic Control for Street and Highway Construction and Maintenance Operations and the City of Austin Transportation Criteria Manual. Upon phase completion, the Contractor shall immediately revise the

temporary traffic devices to reflect the next phase or if the project is complete remove them from the public right of way.

3.2.2 Throughout the life of the Contract, all existing roads and Traffic Control devices included in the Work shall be maintained by the CONTRACTOR to a condition, in the opinion of the OWNER, which is equal to or better than that which existed when Work commenced. Maintenance of existing roads and devices shall take priority over all other Work items and shall be subject to a seven-day-a-week, 24-hours-per-day time frame. The CONTRACTOR shall provide a smooth and safe riding surface for all vehicles along the route of this Project. This could include, but not be limited to, small cars, motorcycles, mopeds and bicycles. If the condition of the street surface deteriorates, for any reason, CONTRACTOR shall take necessary steps to insure immediate restoration.

3.2.3 During construction of streets, drainage, and utility projects, if conditions of existing street surface require maintenance to upgrade from their state when the Work began, a separate pay item may be included in Bid. Otherwise, maintenance work will not be paid for directly but will be considered subsidiary to various Bid items of this Contract.

3.2.4 In the event that CONTRACTOR fails, in opinion of OWNER, to maintain a smooth surface for public comfort, fails to provide ingress and egress to private property, and/or does not provide and maintain proper traffic control devices, OWNER may provide these services and deduct any cost thereof, including overtime and administrative expenses, from all estimates thereafter due the CONTRACTOR. Such action by the OWNER shall not relieve the CONTRACTOR of his liability to protect the public at construction site. Owner may also assess an investigation fee, as established by separate Fee Ordinance, for violations resulting in more than one deficiency report issued to Contractor.

3.2.5 A permit must be obtained from Texas Department of Transportation (TxDOT), prior to Work being performed on state highway routes passing through the City.

3.2.6 CONTRACTOR shall notify the Owner's Representative, Police Department, Fire Department, EMS, and Right of Way Management Division at least seven Calendar Days in advance of beginning proposed Work, with intention to close or partially block any street or any part thereof, or of any construction affecting free flow of traffic. The CONTRACTOR shall plan and adequately provide barricades and warning devices. The same parties shall be notified when normal traffic flow is restored.

3.2.7 Should the CONTRACTOR, in his operations, reduce an existing two-way roadway to less than 20 feet in width, CONTRACTOR shall provide a route through or around the narrowed area as approved by Owner or E/A.

3.2.8 The CONTRACTOR's Flaggers shall be required any time it is necessary for the CONTRACTOR's equipment to move into or across an open traffic lane, or at other such times as directed by the Owner's Representative. A flagger shall be utilized to aid exit of hauling equipment from open traffic lanes to the Work area, and entry of hauling equipment from Work area to open traffic lanes. Flaggers shall be dressed and conduct operations in accordance with Texas Manual on Uniform Traffic Control Devices and the Transportation Criteria Manual. Flagging operations shall be the sole responsibility of the CONTRACTOR.

3.2.9 The CONTRACTOR and Subcontractors shall confine their activities to the immediate area of the construction site and provide the following:

a. Appropriate temporary fences, barricades, and/or Metal Beam Guard Fence if required, for site work involving excavation, utility extensions, remote construction work or other circumstances involving safety of public or protection of the work in progress.

b. Warning lights at open trenches, excavations, etc., during hours from dusk to dawn each day. Protection of structures, utilities, sidewalks, pavements, and other facilities immediately adjacent to excavations, from damages caused by settlement, lateral movement, undermining, washout and other hazards.

3.3 Spoil Disposal

CONTRACTOR may make other arrangements for spoil disposal subject to E/A evaluation of the CONTRACTOR-supplied proof that the Owner(s) of the proposed site(s) has a valid fill permit issued by the appropriate governmental agency. Finally, the CONTRACTOR shall submit a haul route plan including a map of the proposed route(s) for the E/A and Owner's approval.

3.4 Restoration

3.4.1 In order to minimize environmental and potential flood impacts, the sum of the amount of trench opened in advance of the completed line and the amount of trench left unfilled at any time shall be restricted to one (1) full block or 300 linear feet, whichever is less.

3.4.2 Restoration shall be an on-going process during construction operations and shall immediately precede completion of construction of each successive section of the line, which shall not exceed 1,200 linear feet without approval of the E/A.

3.5 Street Markers and Traffic Control Signs

It shall be responsibility of the CONTRACTOR to remove, preserve and reset, as required, Street Marker and Traffic Control Signs that are within construction limits to the line and heights as described in Texas Manual on Uniform Traffic Control Devices before any sidewalks or street excavation is begun. Signs shall not be laid on the ground. No payment will be made for this work but shall be considered subsidiary to the various Bid items. Traffic Sign Activity Section of the Transportation Department (457-4850) shall be notified a minimum of five Working Days prior to completion of the Project so that signs may be checked for damage. Any damage to signs or posts shall be paid for by the CONTRACTOR.

3.6 Burning Permit

Open burning within City limits will not be allowed. Trench burning shall require a permit from the Fire Marshal. Burning permits outside City limits shall be obtained from the appropriate authority.

The CONTRACTOR shall secure and pay for all burning permits.

3.7 Driveways

Unless otherwise indicated, the approach grade of existing driveways shall be modified as indicated and as directed by the Owner's Representative. The OWNER will contact property owners whose driveways require grade modification beyond street right-of-way and the OWNER will obtain their concurrence for approach grade modification. Within the right-of-way, all driveways shall be replaced with concrete driveways. Outside the right-of-way, when approach grade modifications are required, flexible base shall be placed by the CONTRACTOR to resurface existing dirt or gravel driveways; asphalt and concrete drives shall be replaced in kind by the CONTRACTOR. Excavation, Flexible Base, Portland Cement Concrete and Asphaltic Concrete, used for driveways as prescribed above shall not be measured for payment but shall be considered subsidiary to various Bid items in the Contract unless payment is included as a separate Contract pay item.

3.8 Removal or Relocation of Fences and Sprinkler Systems

Removal or relocation of privately owned fences and sprinkler systems not specified in Bid, and within public right-of-way is the primary responsibility of the property owner. OWNER will cause property owners to be aware of any known conflicts and encourage them to make desired adjustments in advance of construction. In the event the property owner does not, or will not, make adjustments necessary for construction of improvements to be made under

this Contract, CONTRACTOR, after receiving written approval from the OWNER, shall remove those portions that interfere with the Work, as follows:

3.8.1 Fences shall be disassembled, by hand, into hand manageable sizes and placed on the private property.

3.8.2 For sprinkler systems, the CONTRACTOR, after assuring that electrical and/or mechanical controls are disconnected, shall remove sprinkler heads, valves, controls, and any other miscellaneous items, including distribution pipe, or wire, saw cut from the system. The CONTRACTOR shall present these materials to the property owner. Where piping is cut, the pipe shall be permanently capped or plugged, unless otherwise directed by the OWNER.

Work for removal or relocation of fences and sprinkler systems shall not be paid for directly but shall be subsidiary to the various Bid items.

End

ARTICLE 1 - GENERAL

1.1 RELATED DOCUMENTS

The following documents are a part of this section:

All documents in Bidding Requirements, Contract Forms and Conditions of the Contract.

Other sections of Division 1 - General Requirements apply to this section.

1.2 DESCRIPTION AND INTENT OF THE WORK

No asbestos containing material (ACM) shall be brought onto the Project site, and/or incorporated into the Project construction without the written consent of the OWNER. Any asbestos containing material found at any time including after contract completion, to have been brought onto the site or incorporated into the Project construction by the CONTRACTOR, or any Subcontractors, Sub-Subcontractors or Suppliers, shall be removed and disposed of in accordance with the then current governmental regulatory standards.

All costs associated with the inspection, sampling, testing, removal and disposal of ACM as described above shall be paid by the CONTRACTOR.

1.3 DEFINITIONS

ASBESTOS: The asbestiform varieties of serpentine (chrysotile), riebeckite (crocidolite) cummingtonite-grunerite (amosite), anthophyllite, actinolite and tremolite.

ASBESTOS CONTAINING MATERIAL (ACM): Any material containing more than one percent (1%) by weight of asbestos of any type or mixture of types.

ASBESTOS CONTAINING BUILDING MATERIAL (ACBM): Any material used in the construction of, or incorporated into the construction of, any building that contains more than one percent (1%) by weight of asbestos of any type or mixture of types.

MSDS: A material safety data sheet (MSDS) is a form containing data regarding the properties of component substances that comprise a manufactured product. They are a basic hazard communication tool that gives details on chemical and physical dangers, safety procedures, and emergency responses for chemicals.

1.4 QUALITY ASSURANCE

PROHIBITION OF ASBESTOS CONTAINING MATERIALS

The E/A has been instructed to not permit any asbestos containing materials to be specified, requested or approved for use in conjunction with this Project.

The E/A has signed the following:

A. 01900A Statement of Non-Inclusion of Asbestos Containing Material (E/A, Prior to Design): stating that the Engineer/Architect shall not specify, request or approve any ACM in this Project without prior written approval of OWNER.

B. 01900B Statement of Non-Inclusion of Asbestos Containing Material (E/A, After Design): stating that the Engineer/Architect has not specified, requested or approved any ACM in this Project without the prior written approval of the OWNER, and that any ACM allowed in this Project is identified in the Statements.

These Statements are included in the Construction Documents.

ASBESTOS CONTAINING MATERIALS PROHIBITED FROM SITE

No asbestos containing materials will be permitted as part of the Project construction. The following list is intended to be used as a general guide to show which types of materials are suspected to contain asbestos:

- Cement Pipes
- Cement Wallboard
- Cement Siding
- Asphalt Floor Tile
- Vinyl Floor Tile
- Vinyl Sheet Flooring/vinyl wall coverings
- Flooring Backing
- Construction Mastics (floor tile, carpet, ceiling tile, etc.)
- Acoustical Plaster
- Decorative Plaster / stucco
- Textured Paintings/Coatings
- Ceiling Tiles and Lay-in Panels
- Spray-Applied Insulation
- Blown-in Insulation
- Fireproofing Materials
- Taping Compounds (thermal)
- Packing Materials (for wall/floor penetrations)
- High Temperature Gaskets
- Laboratory Gloves
- Fire Blankets
- Fire Curtains
- Elevator Equipment Panels
- Elevator Brake Shoes
- HVAC Duct Insulation
- Boiler Insulation
- Breeching Insulation
- Ductwork Flexible Fabric Connections
- Cooling Towers
- Pipe Insulation (corrugated air-cell, block, etc.)
- Heating and Electrical Ducts
- Electrical Panel Partitions
- Electric Cloth
- Electric Wiring Insulation
- Chalkboards
- Roofing Shingles / tiles / membranes
- Roofing Felt
- Roof Coatings
- Base Flashing
- Thermal Paper Products
- Fire Doors
- Caulking/Putties
- Adhesives / mastics
- Wallboard
- Joint Compounds
- Spackling Compounds
- Laboratory hoods/tabletops
- CMU block fill materials

If any of these suspect materials are specified for use on the Project, and if they do not have specific labelling identifying them as asbestos free, then the CONTRACTOR shall notify the OWNER immediately. Laboratory analysis of the material by an OWNER-approved laboratory shall be performed at CONTRACTOR's expense in order to warrant that the material does not contain asbestos. A copy of the package labelling or results of laboratory testing must be provided to the OWNER prior to inclusion of the specified material during construction. Contractor's construction submittals must include MSDSs for all new materials used in construction of buildings, facilties and infrastructure.

1.5 SUBMITTALS

NON-USE OF ASBESTOS AFFIDAVITS

At the time that the CONTRACTOR signs the Agreement, they shall sign a Non-Use of Asbestos Affidavit (Contractor Prior to Construction), Contract Document 00680. This Affidavit certifies that the CONTRACTOR agrees that they will not allow any asbestos containing materials to be incorporated into the construction of the Project or allow any asbestos containing building materials on the site for which the OWNER has not given prior written approval.

Prior to final payment, the CONTRACTOR will provide to the OWNER a Non-Use of Asbestos Affidavit (Contractor After Construction), Contract Document 00681. This Affidavit certifies that the CONTRACTOR did not allow asbestos containing materials to be incorporated into the construction or allowed any asbestos containing building materials on the site for which the OWNER of the Project did not give prior written approval.

ASBESTOS CONTAINING MATERIALS: When any asbestos containing materials are used on the Project, provide the following information:

A detailed description of the material containing the asbestos.

The type and percent of asbestos contained in the material.

The quantity of the materials used, including the square footage, or in the case of pipe insulation, the size and linear footage.

A drawing showing the exact location of any asbestos containing materials.

Final payment shall be withheld until the above described Affidavits, submittals and/or information are received and approved.

END

CITY OF AUSTIN

STATEMENT OF NON-INCLUSION OF ASBESTOS CONTAINING MATERIAL

STATE OF TEXAS
COUNTY OF TRAVIS

ENGINEER/ARCHITECT PRIOR TO DESIGN

"My name is Joseph O. Hoepken, P.E., hereinafter known as Authorized Representative.

"I am over the age of 18 years and I have never been convicted of a crime. I am the Project Manager of City of Austin, Austin Water hereinafter known as ENGINEER/ARCHITECT.

"I am fully competent to make this statement. I have personal knowledge of the facts set forth below and they are all true and correct.

"WHEREAS ENGINEER/ARCHITECT has been selected to provide designs, to prepare the bid and construction documents, and to assist the City of Austin, Texas, hereinafter known as OWNER, during the construction of Water Service Line Replacement Program, Indefinite Delivery/Indefinite Quantity, located at various locations in the City of Austin's ETJ, Austin, Texas, hereinafter known as Project, and

"WHEREAS asbestos in a dust form is a recognized health hazard, and
"WHEREAS the OWNER desires not to have any asbestos containing materials used or incorporated into the construction of the Project;
"THEREFORE the ENGINEER/ARCHITECT affirms that to the best of its knowledge and belief:

1. The ENGINEER/ARCHITECT, any person, firm or organization representing or represented by the ENGINEER/ARCHITECT, shall not knowingly specify, request, or approve for use in conjunction with the Project, any asbestos containing materials or any other materials defined as containing asbestos by any laws, rules or regulations promulgated by the United States Government, the State of Texas or any governmental organization or agency operating under the authority of either of those entities.
2. Realizing that there might be materials required in which a satisfactory non-asbestos containing material cannot be obtained, the ENGINEER/ARCHITECT will do the following before specifying any asbestos containing material:
   A. Inform the OWNER's Project Manager for this Project, in writing, of any intent to specify asbestos containing materials.
   B. Receive written approval from the City of Austin Project Manager for the specifying of any asbestos containing materials.
   C. At the completion of the design phase, and before the OWNER receives any bids for this Project, provide to the Project Manager, in writing, the proposed location of any asbestos containing materials, the type of asbestos they contain, and the percent of asbestos by types.
3. The ENGINEER/ARCHITECT states its understanding that if any asbestos containing materials not approved by the OWNER for inclusion into the Project, are determined, as a result of any inspection and sample analysis performed by an individual(s) and/or firm(s) certified and/or licensed to perform such inspection by the United States Government and/or the State of Texas, to have been knowingly specified, requested and/or approved by the ENGINEER/ARCHITECT for inclusion in the Project, the OWNER shall look to the ENGINEER/ARCHITECT for reimbursement of any and all costs incurred in the removal and/or other abatement of said asbestos containing materials.
4. ENGINEER/ARCHITECT further understands that OWNER shall also look to the ENGINEER/ARCHITECT for any and all damages to OWNER which result from the inability of the OWNER to use any portion or all of the Project due to the incorporation of asbestos containing materials that have been knowingly specified, requested and/or approved by the ENGINEER/ARCHITECT.
5. ENGINEER/ARCHITECT further understands that OWNER will pursue reimbursement of any said cost and compensation for any said damages from the ENGINEER/ARCHITECT by any and every means within OWNER's right and power.

Signature of Authorized Representative: [signature]

STATE OF TEXAS
COUNTY OF TRAVIS

ON June 15, 2016 personally appeared Joseph O. Hoepken, P.E. and been duly sworn by me, subscribed to the foregoing statement and has stated that the facts stated therein are true and correct.

NOTARY PUBLIC STATE OF TEXAS
BEVERLY ANN WILSON
Commission # 11847219
My Commission Expires
January 20, 2020

Notary Public, State of Texas [signature]

Printed Name of Notary Beverly Ann Wilson

My Commission Expires: January 20, 2020

01605A.00/110392

CITY OF AUSTIN

STATEMENT OF NON-INCLUSION OF ASBESTOS CONTAINING MATERIAL

ENGINEER/ARCHITECT AFTER DESIGN

STATE OF TEXAS
COUNTY OF TRAVIS

"My name is Joseph O. Hoepken, P.E., hereinafter known as Authorized Representative.

"I am over the age of 18 years and I have never been convicted of a crime. I am the Project Manager of City of Austin, Austin Water hereinafter known as ENGINEER/ARCHITECT.

"I am fully competent to make this statement. I have personal knowledge of the facts set forth below and they are all true and correct.

"WHEREAS ENGINEER/ARCHITECT has been selected to provide designs, to prepare the bid and construction documents, and to assist the City of Austin, Texas, hereinafter known as OWNER, during the construction of Water Service Line Replacement Program, Indefinite Delivery/Indefinite Quantity, located at various locations in the City of Austin's ETJ Austin, Texas, hereinafter known as Project, and

"WHEREAS asbestos in a dust form is a recognized health hazard, and
"WHEREAS the OWNER desires not to have any asbestos containing materials used or incorporated into the construction of the Project;
"THEREFORE the ENGINEER/ARCHITECT affirms that to the best of its knowledge and belief:

1. The ENGINEER/ARCHITECT, any person, firm or organization representing or represented by the ENGINEER/ARCHITECT, shall not knowingly specify, request, or approve for use in conjunction with the Project, any asbestos containing materials or any other materials defined as containing asbestos by any laws, rules or regulations promulgated by the United States Government, the State of Texas or any governmental organization or agency operating under the authority of either of those entities.
2. The only exceptions to the above statement are the following materials that are required because a satisfactory non-asbestos containing material cannot be obtained. The inclusion of these materials has been approved by the OWNER's Project Manager for this Project.

   None

3. The ENGINEER/ARCHITECT states its understanding that if any asbestos containing materials not approved by the OWNER for inclusion into the Project, are determined, as a result of any inspection and sample analysis performed by an individual(s) and/or firm(s) certified and/or licensed to perform such inspection by the United States Government and/or the State of Texas, to have been knowingly specified, requested and/or approved by the ENGINEER/ARCHITECT for inclusion in the Project, the OWNER shall look to the ENGINEER/ARCHITECT for reimbursement of any and all costs incurred in the removal and/or other abatement of said asbestos containing materials.
4. ENGINEER/ARCHITECT further understands that OWNER shall also look to the ENGINEER/ARCHITECT for any and all damages to OWNER which result from the inability of the OWNER to use any portion or all of the Project due to the incorporation of asbestos containing materials that have been knowingly specified, requested and/or approved by the ENGINEER/ARCHITECT.
5. ENGINEER/ARCHITECT further understands that OWNER will pursue reimbursement of any said cost and compensation for any said damages from the ENGINEER/ARCHITECT by any and every means within OWNER's right and power.

Signature of Authorized Representative: [signature]

STATE OF TEXAS
COUNTY OF TRAVIS

ON June 15, 2016 personally appeared Joseph O. Hoepken, P.E. and been duly sworn by me, subscribed to the foregoing statement and has stated that the facts stated therein are true and correct.

BEVERLY ANN WILSON
Commission # 11847219
My Commission Expires
January 20, 2020

Notary Public, State of Texas Beverly Ann Wilson

Printed Name of Notary Beverly Ann Wilson

My Commission Expires: January 20, 2020

01605B/110392

210S.1 Description

This item governs furnishing and placing a crushed stone base course for surfacing, pavement, or other base courses. “Flexible Base" shall be constructed on an approved, prepared surface in one or more courses conforming to the typical sections and to the lines and grades, indicated on the Drawings or established by the Engineer or designated representative.

This specification is applicable for projects or work involving either inch-pound or SI units. Within the text and accompanying tables, the inch-pound units are given preference followed by SI units shown within parentheses.

210S.2 Submittals

The submittal requirements of this specification item may include:

A. Source, gradation and test results for the crushed limestone material,

B. Notification that the crushed limestone stockpile is completed and ready for testing, and

C. Field density test results for in-place compacted flexible base,

210S.3 Material

A. Mineral Aggregate

The material shall be crushed argillaceous limestone meeting the requirements specified herein. The material shall be from sources approved by the City and shall consist of durable crushed stone that has been screened to the required gradation.

Flexible base materials shall be tested according to the following TxDoT standard test methods:

a) Preparation for Soil Constants and Sieve Analysis	Tex-101-E
b) Liquid Limit	Tex-104-E
c) Plastic Limit[1]	Tex-105-E
d) Plasticity Index	Tex-106-E
e) Sieve Analysis	Tex-110-E
f) Wet Ball Mill[2]	Tex-116-E
g) Triaxial Test	Tex-117-E, Part II

1. Plasticity Index shall be determined in accordance with Tex-107-E (Linear Shrinkage) when liquid limit is unattainable as defined in Tex-104-E.
2. When a soundness value is required on the drawings, the material shall be tested in accordance with Tex-411-A.

Base material shall be stockpiled after crushing, then tested by the City's designated laboratory and approved by the Engineer or designated representative prior to being hauled to the Project.

The material shall be well graded and shall meet the following requirements:

Sieve Designation		Other Requirements	% Retained	
US	SI			
1 3/4"	45 mm		0	
7/8"	22.4 mm		10-35	
3/8"	9.5 mm		30-50	
#4	4.75 mm		45-65	
#40	425 μm		70-85	
		Maximum Plasticity Index		10
		Maximum Wet Ball Mill		42
Maximum Increase in passing #40 (425 μm) sieve from Wet Ball Mill Test			20	

Minimum compressive strength when subjected to the triaxial test shall be 35 psi at 0 psi lateral pressure [240 kiloPascal (kPa) at 0 kPa lateral pressure] and 175 psi at 15 psi lateral pressure [1200 kiloPascal (kPa) at 100 kPa lateral pressure].

B. Asphaltic Material

Prime Coat. Prime Coat shall conform to the requirements of Standard Specification Item 306S, "Prime Coat", except for measurement and payment.

210S.4 Stockpiling, Storage and Management

A. Managing Material**:**

The stockpile shall be constructed on a relatively smooth area that has been cleared of debris, weeds, brush, trees and grass. Stockpiles shall contain between 25,000 and 50,000 cubic yards (19,100 to 38,200 cubic meters). The stockpile shall be constructed using scrapers, bottom dumps or other similar equipment that allows dumping and spreading without rehandling. The stockpile shall be constructed to allow dumping and spreading in one direction only. The height of the stockpile shall not exceed the capabilities of available equipment to make a full cut (bottom to top) on any of the four sides.

A stockpile shall be completed before being tested by the City. The Contractor’s supplier shall notify the City when a stockpile has been completed and is ready to be tested. The stockpile shall not be added to after it has been tested.

The Contractor shall provide material only from stockpiles that have been inspected, tested and accepted by the City. A ticket showing the date, source, stockpile number, and net weight (mass) shall be provided to the Inspector with each load of material delivered to the Project.

Material shall be loaded from the stockpile by making successive vertical cuts through its entire depth.

B. Test Sampling:

The Contractor's supplier may choose the method of sample gathering for testing by the City's laboratory as follows:

1. The supplier shall make a full-height cut a sufficient distance into each side of the stockpile to obtain a uniform sample. The four samples (one from each side of the stockpile) shall then be combined and mixed into a single "test" specimen from which the City's laboratory can obtain a sample.

2. As the stockpile is constructed, a perpendicular cut will be made across the spreading direction at every two feet to four feet (0.6 to 1.2 meters) of height and the sample used to start a "mini" stockpile. The process shall be repeated in two feet to four feet (0.6 to 1.2 meter) increments of height, until the stockpile and the "mini" stockpile are completed. Samples shall be obtained from the "mini" stockpile in the same manner described in (1) above.

C. Testing and Acceptance:

When initial tests indicate
that the material is unacceptable, the City may, if requested by the Contractor's supplier, sample and test the material one more time. The additional sampling and testing shall be paid for by the supplier.

210S.5 Construction Methods

A. Preparation of Subgrade:

Flexible base shall not be placed until the Contractor has verified by proof rolling that the subgrade has been prepared and compacted in conformity with Standard Specification Item 201S, "Subgrade Preparation," to the typical sections, lines and grades indicated on the Drawings. Any deviation shall be corrected and proof rolled prior to placement of the flexible base material.

The Contractor shall not place flexible base until the subgrade has cured to the satisfaction of the Engineer or designated representative, regardless of whether or not the subgrade has been successfully proof rolled. As a minimum, this will be after the surface displays no damp spots and there is no evidence of "sponginess" in the subgrade.

B. First Lift:

Immediately before placing the flexible base material, the subgrade shall be checked for conformity with grade and section. The thickness of each lift of flexible base shall be equal increments of the total base depth. No single lift shall be more than six inches (150 mm) or less than three inches (75 mm) compacted thickness.

The material shall be delivered in approved vehicles. It shall be the responsibility of the Contractor to deliver the required amount of material. If it becomes evident that insufficient material was placed, additional material as

necessary shall be delivered and the entire course scarified, mixed and compacted.

Material deposited upon the subgrade shall be spread and shaped the same day unless otherwise approved by the Engineer or designated representative. In the event inclement weather or other unforeseen circumstances render spreading of the material impractical, the material shall be spread as soon as conditions allow.

Additionally, if the material cannot be spread and worked the same day it is deposited, the Contractor shall "close up" the dump piles before leaving the job site. “Closed up” shall be defined as the use of a motor grader to blade all dump piles together, leaving no open space between piles.

The material shall be spread, sprinkled, if required, then thoroughly mixed; bladed, dragged and shaped to conform to the typical sections indicated on the Drawings.

All areas and "nests" of segregated coarse or fine material shall be corrected or removed and replaced with well-graded material.

Each lift shall be sprinkled as required to bring the material to optimum moisture content, then compacted to the extent necessary to provide not less than the percent density specified in Section 210S.5.D, "Density." In addition to the requirements specified for density, the full depth of flexible base material shall be compacted to the extent necessary to remain firm and stable under construction equipment. After each section of flexible base material is completed, tests, as necessary, will be made by the Engineer or designated representative. As a minimum, three in-place density tests per section per day will be taken. If the material fails to meet the density requirements, it shall be reworked as necessary to meet these requirements. All initial testing will be paid for by the City. All retesting shall be paid for by the Contractor.

Throughout the entire operation, the surface of the material shall be maintained by blading and, upon completion, shall be smooth and shall conform to the typical section indicated on the Drawings and to the established lines and grades.

In that area on which pavement is to be placed, any deviation in excess of 1/4 inch (6.5 mm) in cross section or 1/4 inch in a length of 16 feet (6.5 mm in a length of 5 meters) measured longitudinally shall be corrected by loosening, adding or removing material, and by reshaping and recompacting. All irregularities, depressions or weak spots shall be corrected immediately by scarifying the areas affected, adding suitable material as required, and by reshaping and recompacting. Should the lift, due to any reason or cause, lose the required stability, density and/or finish before the surfacing is complete, it shall be recompacted and refinished at the Contractor's expense.

C. Succeeding Lifts:

Construction methods for succeeding lifts shall be the same as prescribed for the first lift. For that lift of the flexible base upon which the curb and gutter will be constructed, as well as the last flexible base lift (i.e. top of the flexible base), the Contractor shall check the surface of the lift for conformity to the lines and grades by setting "blue tops" at intervals not exceeding 50 feet (15 meters) on

the centerline, at quarterpoints, at curb lines or edge of pavement, and at other points that may be indicated on the Drawings.

When the thickness of a particular lift of the flexible base is in question, the Contractor shall check the surface of the lift for conformity to the lines and grades by setting "blue tops" at intervals not exceeding 50 feet (15 meters) on the centerline, at quarter points, at curb lines or edge of pavement, and at other points that may be indicated on the Drawings

D. Density:

The flexible base shall be compacted to not less than 100 percent density as determined by TxDoT Test Method Tex-113-E.

Field density determination shall be made in accordance with TxDoT Test Method Tex-115-E unless otherwise approved by the Engineer or designated representative. Each lift of the flexible base shall also be tested by proof rolling in conformity with Standard Specification Item 236S “Proof Rolling.”

E. Priming:

After the flexible base material has been compacted to not less than 100 percent density, and tested by proof rolling, a prime coat will be applied in accordance with Standard Specification Item 306S, "Prime Coat."

F. Curing:

Pavement materials, such as a tack coat or surface course, shall not be placed on the primed surface until the prime coat has been absorbed into the base course. At least 24 hours, or longer if designated by the Engineer or designated representative, shall be allowed when cutback asphalt is used as the prime coat.

210S.6 Measurement

"Flexible Base" will be measured by the cubic yard (cubic meter: 1 cubic meter equals 1.196 cubic yards), complete in place, as indicated in the Contract Documents.

210S.7 Payment

This item will be paid for at the contract unit bid price for "Flexible Base". The unit bid price shall include full compensation for all work specified herein, including the furnishing, hauling, placing and compacting of all materials; for rolling, proof rolling, recompacting and refinishing; for all water required; for retesting as necessary; for priming; and for all equipment, tools, labor and incidentals necessary to complete the Work.

Prime coat will not be measured and paid for directly but shall be included in the unit price bid for Standard Specification Item 210S, "Flexible Base.”

Payment will be made under one of the following:

Pay Item No. 210S-A: Flexible Base Per Cubic Yard.

End

SPECIFIC CROSS REFERENCE MATERIALS

City of Austin Standard Specifications

Designation	Description
Item No. 201S	Subgrade Preparation
Item No. 236S	Proof Rolling
Item No. 306S	Prime Coat

Texas Department of Transportation: Standard Specifications for Construction and Maintenance of Highways, Streets, and Bridges

Designation	Description
Tex-101-E	Preparation of Soil and Flexible Base Materials for Testing
Tex-104-E	Determination of Liquid Limit of Soils
Tex-105-E	Determination of Plastic Limit of Soils
Tex-106-E	Method of Calculating the Plasticity Index of Soils
Tex-107-A	Determination of Bar Linear Shrinkage of Soils
Tex-110-E	Determination of Particle Size Analysis of Soils
Tex-113-E	Laboratory Compaction Characteristics and Moisture-Density Relationship of Base Materials and Cohesionless Sands
Tex-115-E	Field Method for Determination of In-Place Density of Soils and Base Materials
Tex-116-E	Ball Mill Method for Determination of the Disintegration of Flexible Base Material
Tex-117-E	Triaxial Compression Tests for Disturbed Soils and Base Materials
Tex-411-A	Soundness of Aggregate By Use Of Sodium Sulfate Or Magnesium Sulfate

RELATED CROSS REFERENCE MATERIALS

City of Austin Standard Details

Designation	Description
No. 1000S-2	Flexible Base with Asphalt Surface Trench Repair-Existing Pavement
No. 510S-3	Typical Trench with Paved Surface
No. 1000S	Bus Stop Paving
No. 1000S-10	Local Street Sections
No. 1000S-11(1)	Residential and City of Austin Neighborhood Collector Street Sections
No. 1000S-11(2)	Industrial and Commercial Collector Street Sections
No. 1000S-12(1)	Primary Collector Street Sections
No. 1000S-12(2)	Primary Arterial Street Sections
No. 1000S-13(1)	Minor Arterial Street Sections (4 Lanes)
No. 1000S-13(2)	Minor Arterial Street Sections-(4 Lanes divided)
No. 1000S-14	Major Arterial Street Sections

City of Austin Utility Criteria Manual

Designation	Description
Section 5.8.2	Flexible Base
Section 5.7.3	Flexible Base with Asphalt Surface
Section 5.9.1	Excavation in Alley

City of Austin Transportation Criteria Manual

Designation	Description
Section 3.2.0	General Criteria
Section 3.4.3 .D	Layer Data-Minimum Thickness
Table 3-1	Minimum Layer Thickness
Section 3.4.3 .F	Layer Data- Minimum Thickness
Table 3-2	Layer Thickness Increment
Section 3.4.3 .J	Layer Data- Stiffness Coefficient
Table 3-3	Stiffness Coefficient
Table 3-9	Recommended Salvage values
Table 3-10	AASHTO Layer Coefficients

Item No. 340S
Hot Mix Asphaltic Concrete Pavement

340S.1 Description

This item shall govern base, level up, and pavement surface courses composed of a compacted mixture of aggregate and asphaltic cement mixed hot in a mixing plant. The hot mix asphaltic (HMA) concrete pavement shall be constructed on a previously completed and approved subgrade, subbase material, base material, concrete slab or existing pavement.

This specification is applicable for projects or work involving either inch-pound or SI units. Within the text and accompanying tables, the inch-pound units are given preference followed by SI units shown within parentheses.

340S.2 Submittals

The submittal requirements of this specification item may include:

A. A mix design submittal including the plant corrected Job Mix Formula (JMF) for the hot mix asphaltic concrete,
B. Certification that the aggregate materials meet appropriate quality requirements.
C. Particle-size gradation and specific gravity tests on all aggregate materials.
D. Certification that the asphalt cement for paving materials meet appropriate quality requirements.

340S.3 Materials

The Contractor shall furnish materials to meet the requirements specified herein and shall be solely responsible for the quality and consistency of the product delivered to the Project.

A. Aggregate: The aggregate shall be composed of coarse aggregate, a fine aggregate and, if required or allowed, mineral filler and reclaimed asphalt pavement (RAP). RAP use will be allowed in all base course mixtures except as specifically excluded herein, in the Contract Documents or on the Drawings, provided no more than 20% RAP is used.

   RAP use will not be permitted in pavement surface courses.

   Aggregates shall meet the quality requirements of Table 1 and other requirements as specified herein. The aggregate contained in RAP will not be required to meet Table 1 requirements unless indicated otherwise on the Drawings.

   1. Coarse Aggregate: Coarse aggregate is defined as that part of the aggregate retained on the No. 10 (2.00 mm) sieve and shall consist of clean, tough, durable fragments of crushed stone or crushed gravel of uniform quality throughout.

      Gravel from each source shall be crushed to the extent that it has a minimum of 85% of the particles retained on the No. 4 (4.75 mm) sieve with two or more mechanically induced crushed faces as determined by TxDOT Test Method TEX-460-A (Part I). The material passing the No. 4 (4.75 mm) sieve and retained on the No. 10 (2.00 mm) sieve must be the produced from crushing aggregate that was originally retained on the No. 4 (4.75 mm) sieve.

   2. Reclaimed Asphalt Pavement (RAP): RAP is defined as a salvaged, milled, pulverized, broken or crushed asphaltic pavement. The RAP to be used in the mix shall be crushed or broken to the extent that 100 percent will pass the 2-inch (50 mm) sieve.

The RAP shall be stockpiled in such a manner that assures that it will not become contaminated by dirt or other objectionable materials. Unless indicated otherwise on the Drawings, stockpiled, crushed RAP must not exhibit a decantation more than 5 percent or a plasticity index more than 8, when tested in accordance with TxDOT Test Method Tex-406-A, Part I, or Test Method Tex-106-E, respectively.

3. Fine Aggregate: Fine aggregate is defined as that part of the aggregate passing the No. 10 (2.00 mm) sieve and shall be of uniform quality throughout. A maximum of 15 percent of the total aggregate may be field sand or other uncrushed fine aggregate.

   Screenings shall be supplied from sources whose coarse aggregate meets the abrasion and magnesium sulfate soundness loss requirements shown in Table 1.

   a) Unless indicated otherwise on the Drawings, stone screenings, which are the product of a rock crushing operation, are required and shall meet the following gradation requirements when tested in accordance with TxDOT Test Method Tex-200-F, Part I.

Material	Percent by Weight (Mass)
Passing 3/8 inch (9.50 mm) sieve	100
Passing No. 10 (2.00 mm) sieve	70-100
Passing No. 200 (75 µm) sieve	0-15

   b) Crushed gravel screenings may be used with, or in lieu of, stone screenings only when indicated on the Drawings. Crushed gravel screenings must be the product of crushing aggregate that was originally retained on the No. 4 (4.75 mm) sieve and must meet the gradation for stone screenings shown above.

4) Mineral Filler: Mineral filler shall consist of thoroughly dried stone dust, Portland cement, fly ash, lime or other mineral dust approved by the Engineer or designated representative. The mineral filler shall be free from foreign matter.

   Portland cement manufactured in a cement kiln fueled by hazardous waste shall be considered as an approved product if the production facility is authorized to operate under regulation of the Texas Natural Resource Conservation Commission (TNRCC) and the U. S. Environmental Protection Agency (EPA). Supplier shall provide current TNRCC and EPA authorizations to operate the facility.

   Fly ash obtained from a source using a process fueled by hazardous waste shall be considered as an approved product if the production facility is authorized to operate under regulation of the Texas Natural Resource Conservation Commission (TNRCC) and the U. S. Environmental Protection Agency (EPA). Supplier shall provide current TNRCC and EPA authorizations to operate the facility.

   The addition of baghouse fines or other collected fines will be permitted if the mixture quality is not adversely affected in the opinion of the Engineer or designated representative. In no case shall the amount of material passing the No. 200 (75 µm) sieve exceed the tolerances of the job-mix formula or the master gradation limits.

   When tested by TEX-200-F (Part I or Part III, as applicable), the mineral filler shall meet the following gradation requirements. Baghouse fines are not required to meet the gradation requirements.

Material	Percent by Weight (mass)
Passing No. 30 (600 µm) Sieve	95 - 100
Passing No. 80 (187.5 µm) Sieve, not less than	75
Passing No. 200 (75 µm) Sieve, not less than	55

TABLE 1: AGGREGATE QUALITY REQUIREMENTS *

Requirement	Test Method	Amount
COARSE AGGREGATE		
Deleterious Material, percent, maximum	Tex-217-F, I	1.5
Decantation, percent, maximum	Tex-217-F, II	1.5
Los Angeles Abrasion, percent, maximum	Tex-410-A	40
Magnesium Sulfate Soundness Loss 5 cycle, percent, maximum	Tex-410-A	30
FINE AGGREGATE		
Linear Shrinkage, maximum	Tex-107-E, II	3
COMBINED AGGREGATES		
Sand Equivalent Value, minimum	Tex-203-F	45

***** - Aggregates, without added mineral filler or additives, combined as used in the job-mix formula (Plant Corrected).

B. Asphaltic Material

1. Paving Mixture. Asphalt cement for the paving mixture shall conform to the requirements of Standard Specification Item No. 301S, “Asphalts, Oils and Emulsions”, for AC-20 or PG64-22, Styrene (SBS) Modified Asphalt Cement, AC-SBS Blend AC-45P or PG76-22S, unless otherwise indicated in the Project Documents.

2. Tack Coat: Tack Coat shall conform to Standard Specification Item No. 307S, “Tack Coat”.

C. Additives: Additives to facilitate mixing and/or improve the quality of the asphaltic mixture or tack coat may be used with the authorization of the Engineer or designated representative. The Contractor may choose to use either lime or a liquid anti-stripping agent to reduce moisture susceptibility of the aggregate.

340S.4 Paving Mixtures

An asphalt mixture design is developed by a laboratory process, which includes the determination of the quality and quantity of the asphalt cement and the individual aggregates, and the testing of the combined mixture (Laboratory Design). The Laboratory Design is subsequently revised to produce an appropriate job mix formula.

The job mix formula (JMF) lists the quantity of each component to be used in the mix after the laboratory design has been adjusted by running it through a particular plant (i.e. the mix design is Plant Corrected). The JMF will be the standard to which the Acceptance Plan will be applied. The JMF of one drum or batching unit shall not be used for another unit.

The Contractor shall submit to the Engineer on forms provided by the Engineer or designated representative, an asphalt mixture design reviewed, signed and sealed by a Registered Professional Engineer licensed in the State of Texas or certified by a TxDOT Level II Certified

Asphalt Technician. An asphalt mixture design shall be submitted for a comprehensive review every two (2) years. Mix designs older than one year will not be accepted without a review of current test data of the proposed materials and current mix design to ensure that the materials meet specification requirements.

The JMF (Plant Corrected) shall be submitted to the Engineer or designated representative on a form provided by the Engineer through the Construction Inspector or Project Manager of the Project for review, for each individual Project, a minimum of three (3) working days before the mixture is to be placed. Under no circumstances will a mixture be placed before its use is reviewed and approved by the Engineer or designated representative.

Performance of the mix design shall remain the responsibility of the Contractor.

A. Mixture Design: The mix shall be designed in accordance with TxDOT Construction Bulletin C-14 and Test Method Tex-204-F to conform with the requirements herein. The master grading limits of the appropriate type and the JMF will be plotted on a graduated chart with sieve sizes raised to the 0.45 power and will be submitted to the Engineer or designated representative with the asphalt mixture design.

   The Bulk Specific Gravity of aggregates in RAP will be determined on extracted aggregates.

B. Types: The blend of coarse aggregate, fine aggregate, and mineral filler, if allowed, that is established by TxDOT Test Method Tex-200-F, Dry Sieve Analysis, shall conform to the master gradation shown in Table 2 for the type of specified mixture. The voids in the mineral aggregate (VMA) will be determined as a mixture design requirement only, in accordance with TxDOT Test Method Tex-207-F, and shall not be less than the value indicated in Table 2.

TABLE 2: Master Grading - Percent Passing by Weight (Mass) or Volume

Sieve Size US (SI)	Type A Coarse Base	Type B Fine Base	Type C Coarse Surface	Type D Fine Surface	Type F Fine Mixture
1-1/2" (37.5 mm)	100				
1-1/4" " (31 mm)	95-100				
1" (25 mm)		100			
7/8" (22 mm)	70-90	95-100	100		
5/8 (15.5 mm)"		75-95	95-100		
1/2" (12.5 mm)	50-70			100	
3/8" (9.5 mm)		60-80	70-85	85-100	100
1/4" (6.25 mm)					95-100
No. 4 (4.75 mm)	30-50	40-60	43-63	50-70	
No. 10 (2.00 mm)	20-34	27-40	30-40	32-42	32-42
No. 40 (425 µm)	5-20	10-25	10-25	11-26	9-24
No. 80 (187.5 µm)	2-12	3-13	3-13	4-14	3-13
No. 200 (75 µm)	1-6*	1-6*	1-6*	1-6*	1-6*
VMA % minimum	11	12	13	14	15
Rec. Min. Lift	3" (75 mm)	2" (50 mm)	1-3/4" (45 mm)	1" (25 mm)	3/4" (20 mm)

C. Tolerances: Fluctuations in the aggregate gradation and asphalt content of the Job Mix Formula (JMF) shall not vary by more than the following criteria but the aggregate gradation shall be limited to the range of the master gradation as established by TEX-210-F.

SIEVES	Percent By Weight (Mass)
2" ” (50 mm) Sieve through No. 10 ” (2.00 mm) Sieve	±5.0
No. 40 (425 µm) through No. 200 (75 µm) Sieve	± 3.0
Asphalt Content	±0.5

D. Stability and Density: The mixture shall be designed at or near optimum density, as indicated on the Drawings, to conform to the following percent of Maximum Theoretical Density as measured by TxDOT Test Method TEX-227-F and Stability conforming to TxDOT Test Method TEX-208-F. The laboratory mixture shall be molded in accordance with TxDOT Test Method TEX-206-F and the Bulk Specific Gravity determined in accordance with TxDOT Test Method TEX-207-F.

	Optimum Laboratory Density (%)	Laboratory Density (%) Min.	Laboratory Density (%) Max.	Stability
Local Streets Surface Courses	96	94.5	97.5	35 Min.
Collectors & Arterials Surface Courses	96	94.5	97.5	40-60
All Base Courses	96	94.5	97.5	35 Min.

E. Job Mix Formula Field Adjustments: The Contractor shall produce a mixture of uniform composition closely conforming to the reviewed JMF, that falls within the limits of the tolerances given above and the Acceptance Plan.

If it is determined by the City of Austin that adjustments to the JMF are necessary to achieve the specified requirements, the Engineer or designated representative may allow adjustments of the JMF within the following limits without a laboratory redesign of the mixture. The adjusted JMF shall not exceed the master grading criteria for the type of mixture specified. The proposed JMF adjustments shall not exceed 5 percent on any one sieve, ½-inch (12.5 mm) size and larger, or 3 percent on the sieve size below the 1/2-inch (12.5 mm) sieve of the JMF (Plant Corrected) reviewed for the Project.

When the proposed adjustments exceed either the 5 or 3 percent limits, and the Engineer or designated representative determines that the impact of these changes may adversely affect pavement performance, a new laboratory mixture design will be required.

The asphalt content may be adjusted with the concurrence of the Engineer or designated representative to maintain desirable laboratory density near the optimum value while achieving other mix requirements. However, increasing the asphalt content of the mixture in order to reduce pavement air voids will not be allowed. Also, if the percent air voids is determined to be less than 4 percent, adjustments shall be made to the plant production by the Contractor, within the tolerances as outlined above, so that an adequate air void level is attained.

340S.5 Equipment

The trucks that deliver the hot mix asphalt concrete material to the project shall be of sufficient number to insure a continuous paving operation. All equipment used for the production, placement and compaction of the mixture shall be maintained in good repair and operating

conditions to the satisfaction of the Engineer or designated representative. All equipment shall be made available for inspection. If the Engineer or designated representative expresses concern about the condition of any equipment, it shall not be used until it is repaired to the satisfaction of the Engineer or designated representative.

A. Mixing Plants: Plants may be of the weigh-batch type, the modified weigh-batch type or drum-mix type equipped with suitable material conveyers, power units, mixing equipment, aggregate proportioning devices, dryers, bins, dust collectors and sensing and recording devices as appropriate for the mixing plant type. The mixing plants shall meet the requirements specified in Section 340.4, 'Equipment' of TxDOT Specification Item No. 340, "Hot Mix Asphaltic Concrete Pavement".

B. Spreading and Finishing Paving Machine: The paving machine shall be self-propelled and equipped with a heated compacting screed capable of producing a finish surface meeting the requirements of the street cross-section indicated on the Drawings and all surface criteria. Extensions to the screed shall have the same heating and compacting capabilities as the primary unit, except for use on variable depth tapered areas and/or as approved by the Engineer or designated representative.

   The paving machine shall be equipped with an approved automatic dual longitudinal screed control system and an automatic transverse screed control system. The longitudinal controls shall be capable of operating from any longitudinal grade reference including a string line, ski, mobile string line or matching shoe. Unless indicated otherwise on the Drawings, the Contractor may use any one of these grade references. The selected grade reference equipment shall be maintained in good operating condition by personnel trained in the use of the specific type of equipment.

   The Contractor shall furnish all labor and equipment required for establishing and maintaining appropriate grade reference.

C. Rollers: The Contractor shall select rollers conforming to Item 230S, "Rolling (Flat Wheel)" and Item 232S, "Rolling (Pneumatic Tire)". Rollers that do not conform to these requirements shall be immediately removed from the Project.

D. Motor Grader: A self-propelled power motor grader may only be used, when its use is approved by the Engineer or designated representative. It shall have a blade of not less than 12 feet (3.66 meters) and a wheelbase of not less than 16 feet (4.88 meters). Smaller graders may be used for small irregular areas when approved by the Engineer or designated representative.

E. Material Transfer Equipment: Equipment for transferring the HMA mixture from the hauling units or the roadbed to the spreading and finishing machine will be allowed unless indicated otherwise on the Drawings.

   Windrow pick-up equipment, if permitted by the Engineer or designated representative, shall be constructed in such a manner that substantially all of the HMA mixture deposited on the roadbed is picked up and loaded into the spreading and finishing machine. The HMA mixture shall not be contaminated with foreign material. The loading equipment shall be designed so that it does not interfere with the spreading and finishing machine in obtaining the required line, grade and surface without resorting to hand finishing.

F. Straightedges and Templates: The Contractor shall provide a ten-foot (3.05 meter) straightedge acceptable to the Engineer or designated representative for surface testing. Satisfactory templates shall be provided as required by the Engineer or designated representative.

340S.6 Stockpiling Aggregates

Aggregates shall be stockpiled to facilitate blending. When the aggregate is not stockpiled on a hard, non-contaminant base, the bottom six-inch (150 mm) depth of the stockpiles shall not be used in asphaltic mixtures. Where space is limited at the plant site, the aggregate stockpiles shall be separated by walls or other appropriate barriers.

Aggregates shall be stockpiled and handled in a manner that will insure minimization of segregation and contamination. Aggregate and RAP stockpiles shall only contain material from a single source.

340S.7 Mixture Temperature

The Contractor shall select a target temperature for discharge of the HMA mixture from the mixer between 250°F (120°C) and 350°F (176°C) that is suitable to weather and Project conditions. The target temperature shall be reported to the Engineer or designated representative daily and recorded in the Daily Progress Report. The HMA mixture temperature shall not vary by more than 25°F (14°C) from the target temperature for discharge from the mixer. HMA mixtures that are discharged from the mixer at a temperature exceeding 360°F (182°C) or a temperature more than 50°F (28°C) below the target temperature shall not be accepted and shall not be placed on the Project.

340S.8 Mixture Storage

A surge-storage system may be used to minimize production interruptions during a normal day of operation. When approved by the Engineer or designated representative, overnight storage of HMA mixture in insulated storage bins may be used provided that material temperature and physical properties of the HMA mixture are not adversely affected. HMA mixtures that include hardened lumps shall not be used. Stored HMA mixtures shall not be exempt from any requirements provided in this specification.

When a surge-storage system is used, it shall be equipped with a device such as a gob hopper or other device approved by the Engineer or designated representative to prevent segregation in the surge-storage bin.

340S.9 Mixture Moisture Content

Hot mix asphalt (HMA) mixtures produced from any plant shall not have a moisture content in excess of 1 percent by weight (mass) when discharged from the mixer. The moisture content shall be determined in accordance with TxDOT Test Method Tex-212-F, Part II, except that the sample shall be left in the oven a total of not less than four (4) hours.

340S10 Construction Methods

A General: The Contractor shall be responsible for the production, transportation, placement and compaction of the specified HMA paving mixture to the requirements of this specification. The Contractor shall also be responsible for providing a safe environment for inspection personnel to inspect the equipment and to acquire samples.

All hot mix asphalt concrete pavement surface courses shall be placed with a spreading and finishing (lay-down) machine only. All hot mix asphalt concrete pavement base layers with the possible exception of the first lift of the base layer shall also be placed with a

spreading and finishing (lay-down) machine. Longitudinal pavement joints shall be located under the proposed lane lines. Density tests shall be taken prior to opening to traffic.

The first lift of a base layer may be placed with a motor grader if approved in advance by the Engineer or designated representative. The loose measure thickness of this first lift shall not exceed 6 inches (150 mm). If placed with a motor grader, the first lift shall achieve a minimum in-place relative density of 89% as determined by TxDOT test procedures TEX-207-F and TEX-227-F. All subsequent lifts should be placed with a spreading and finishing (lay-down) machine and shall be subject to the requirements of Section 340S.12, "Acceptance Plan". Density tests will be taken randomly to confirm compliance with the specification requirements.

For hot mix asphalt overlays, an automatic screed shall be used with outriggers.

Any material delivered to the Project that by visual inspection can reasonably be expected not to meet specification requirements (i.e. segregated or burned material, deficient or excess asphalt, low mixing temperature, visible contaminants, etc.), as determined by the Engineer or designated representative, shall not be used or left in place.

Equipment shall be inspected prior to use and, if found to be defective or in an operating condition that could potentially affect the quality of the finished pavement, as determined by the Engineer or designated representative, its use shall not be allowed. Leakage of fuels, oils, grease, hydraulic or brake fluids or other contaminants onto the prepared surface or newly-laid HMA layer will not be allowed and may require replacement of the affected pavement area.

The HMA paving mixture, when placed with a spreading and finishing machine, shall not be placed when the air temperature is below 50°F (10°C) and is falling, but it may be placed when the air temperature is above 40°F (4°C) and is rising.

The paving mixture, when used as a level-up course or when spread with a motor grader, shall not be placed when the air temperature is below 60°F (15°C) and is falling, but it may be placed when the air temperature is 50°F (10°C) and is rising. An HMA layer with a thickness of 1-1/2 inches (37.5 mm) and less shall not be placed when the temperature of the surface on which the layer is to be placed is below 50°F (10°C). The temperature shall be taken in a shaded area away from artificial heat.

Additional surface temperature requirements may be included in the Contract Documents or indicated on the Drawings.

Surfaces to be paved shall be finished, primed, cured, broomed and tacked, as appropriate, to the satisfaction of the Engineer or designated representative. If the surface on which the first course of the paving mixture is to be placed is a flexible base course, and a cut-back asphalt is to be used as a prime coat, the flexible base shall have been primed and cured a minimum of 24 hours before the paving mixture may be placed. The 24-hour restriction will not apply to a flexible base that has been primed with material other than a cutback. However, the surface on which the tack coat and/or paving mixture are to be placed shall be in a dry condition.

Pavement shall be opened to traffic as soon as possible after temporary pavement markings or permanent markings are in place as indicated on the Drawings) or as directed by the Engineer or designated representative. Construction traffic allowed on pavements open to the public will be subject to all laws governing traffic on streets and highways.

B. Tack Coat: The surface upon which the tack is to be placed shall be cleaned thoroughly to the satisfaction of the Engineer or designated representative. The surface shall be given a

uniform application of tack coat as governed by Standard Specification Item No. 307S, "Tack Coat". The tack coat shall be applied, as directed by the Engineer or designated representative, with an approved sprayer at a rate not to exceed 0.05 gallons per square yard. (0.225 liters per square meter) of surface area. Where the paving mixture will adhere to the surface on which it is to be placed without the use of a tack coat, the tack coat may be eliminated when approved by the Engineer or designated representative. All contact surfaces of curbs, castings and all structures and all joints shall be painted with a thin uniform application of tack coat.

During the application of tack coat, care shall be taken to prevent splattering of adjacent pavement, curb and gutter and structures. Before the Work can be accepted, all splatter shall be removed by the Contractor at the Contractor's expense.

C. Transporting Hot Mix Asphaltic (HMA) Concrete: The HMA mixture shall be hauled to the Work site in tight vehicles that were previously cleaned of all foreign material. Dispatching of the vehicles shall normally be arranged so that all material delivered is placed and all rolling completed during daylight hours. Nighttime paving may be allowed, when approved in advance by the Engineer or designated representative.

In cool weather or for long hauls, truck bodies containing the HMA mixture shall be covered.

If necessary, to prevent the HMA mixture from adhering to the truck body, the inside of the truck may be given a light coating of a release agent satisfactory to the Engineer or designated representative.

D. HMA Placement: The HMA mixture shall be dumped and spread on the approved prepared surface with the spreading and finishing machine. When properly compacted, the finished pavement shall be smooth, of uniform texture and density and shall meet the requirements of the typical cross sections and the surface tests. In addition the placement of the HMA mixture shall be done without tearing, shoving, gouging or segregating the mixture and without producing streaks in the HMA layer.

Discharge of the HMA mixture into the finishing machine shall be controlled so that the spreading and finishing machine is not bounced or jarred and the required lines and grades shall be obtained without resorting to hand finishing except as permitted below in this Section.

Unless indicated otherwise on the Drawings, dumping of the HMA material in a windrow and then placing the HMA mixture in the finishing machine with windrow pick-up equipment will be permitted provided the temperature of the HMA mixture does not drop more than 50°F (28°C) below the target temperature before being placed by the finishing machine.

Under no circumstances will the HMA material be permitted to be dumped on or near the job site and then reloaded for hauling to the site of placement. Exceptions may be allowed if approved by the Engineer or designated representative.

The windrow pick-up equipment shall be operated in such a manner that substantially all the mixture deposited on the roadbed or prepared surface is picked up and loaded into the finishing machine without contamination by foreign material. The windrow pick-up equipment will also be so operated that the finishing machine will obtain the required line, grade and surface without resorting to hand finishing. Any operation of the windrow pick-up equipment resulting in accumulation and subsequent shedding of accumulated material into the HMA mixture will not be permitted.

When approved by the Engineer or designated representative, level-up courses may be spread with a motor grader that meets the requirements of this specification item.

The spreading and finishing machine shall be operated at a uniform forward speed consistent with the plant production rate, hauling capability and roller train capacity to result in a continuous operation. Stopping of the spreading and finishing machine between trucks is to be held to a minimum. If, in the opinion of the Engineer or designated representative, delivery of material is adversely affecting the condition of the HMA layer (excessive stopping of the spreading and finishing machine, loss of mixture temperature, etc.), the Engineer or designated representative may require paving operations to cease until acceptable methods are provided to minimize starting and stopping of the spreading and finishing machine.

The hopper gates of the spreading and finishing machine shall be adjusted to provide an adequate and consistent flow of material. This shall result in enough material being delivered to the augers so that they are operating approximately 85 percent of the time or more. The augers shall provide means to supply adequate flow of material to the center of the paver. Augers shall supply an adequate flow of material for the full width of the mat being placed, as approved by the Engineer or designated representative. Augers should be kept approximately one-half to three-quarters full of HMA mixture at all times during the paving operation.

When the HMA mixture is placed in a narrow strip along the edge of an existing pavement, or is used to level up small areas of an existing pavement or is placed in small irregular areas where the use of a finishing machine is not practical, the finishing machine may be eliminated when permitted by the Engineer or designated representative.

The paving material adjacent to castings and flush curb and gutter and structures shall be finished uniformly high so that when compacted, it will be slightly above but not more than 1/8 inch (3 mm) above the edge of the casting or gutter lip.

Construction joints of successive courses of HMA material shall be offset at least 6 inches (150 mm). Longitudinal joints in the layer shall be placed to coincide with lane lines as directed the Engineer or designated representative. Transverse joints shall be offset a minimum of 5 feet (1.5 meters).

E. Compaction: The pavement layers/lifts shall be compacted thoroughly and uniformly to obtain the compaction and cross section meeting the requirements indicated on the Drawings and this specification item.

Regardless of the method used for compaction, all rolling to achieve specified density shall cease before the temperature of the HMA mixture drops below 175°F (80°C).

Rolling with a pneumatic tire roller shall be used to seal the surface. Rolling with a tandem or other steel-wheel roller shall be provided if required to iron out any roller marks. Surface sealing and removal of roller marks may be accomplished at HMA temperatures below 175°F (80°C).

Vibratory rollers shall not be allowed in the vibrating mode on layers with a plan thickness less than 1-1/2 inches (37.5 mm).

The motion of the rollers shall be slow enough to avoid other than usual initial displacement. If any displacement occurs, it shall be corrected to the satisfaction of the Engineer or designated representative.

The roller shall not be allowed to stand on pavement, which has not been compacted to minimum density requirements. In order to prevent adhesion of the surface mixture to the steel-wheel rollers, the wheels shall be thoroughly moistened with water; however an excess

of water will not be allowed. Necessary precautions shall be taken to prevent the dropping of diesel, gasoline, oil, grease or other foreign matter on the pavement, either when the rollers are in operation or when standing.

The edges of the pavement along curbs, headers and similar structures, and all places not accessible to the roller, or in such positions as will not allow thorough compaction with the rollers, shall be thoroughly compacted with lightly oiled tamps.

Rolling with a trench roller will be required on widened areas, in trenches and other limited areas where satisfactory density cannot be obtained with the approved rollers.

340S.11 Sampling and Testing

The HMA mixture shall be tested daily at the Project site for conformance to specification requirements. The Engineer or designated representative shall utilize a random selection method to determine sample locations based on the Contractor's anticipated production. Each day's anticipated production shall be divided into three (3) essentially equal single-pass, sub-area lots. Each day's sample locations shall be equally distributed over the three (3) sub-areas. If, due to the weather or plant malfunctions, the Contractor’s daily-anticipated production is not attained, the random locations will not be recalculated. Also, no more than one location of the three (3) sub-areas shall be located in an irregular shaped area such as a cul-de-sac.

Unless directed otherwise by the Engineer or designated representative, a minimum of three bag samples and three correlating 6-inch (150-mm) cores will be obtained from each day's production.

Bag samples shall be taken during lay-down operations. The primary sampling point for the bag samples shall be from the windrow if a windrow elevator is used. If a windrow elevator is not used, the sample shall be taken from the middle of the paving machine hopper. This sampling location will require a stoppage in the paving operation in order for the Inspector to safely secure a sample from the hopper.

One core shall be taken for every 2,000 single-pass square yards (1 675 single-pass square meters) with a minimum of three (3) cores for all projects. One core shall be taken at the same station and pass sampled for each of the bag samples. Cores shall be taken by the City’s laboratory within 48 hours of pavement laydown unless otherwise directed by the Engineer or designated representative.

For total areas of less than 500 square yards (420 square meters), a total of only two bag samples and two correlating cores will be obtained. If the Contractor desires additional testing, it shall be at its own entire expense.

The Engineer or designated representative may alter, increase or waive the testing schedule to ensure that the Work performed and the material used meet specification requirements. Acceptability of the completed pavement shall be based on the average of test results for the Project as defined in Section 340S.12, "Acceptance Plan" of this item.

Gradation, asphalt content and stability value of the HMA mixture shall be reported for each of the bag samples. The stability value reported for each of the bag samples shall be the average of three (3) tests per bag.

Pavement thickness and density shall be determined from 6-inch (150 mm) field cores. For each day's placement, density of cores for which no corresponding bag samples were taken shall be determined by using the average Maximum Theoretical Density of the day's three (3) bag samples or as may otherwise be determined by the Engineer or designated representative.

When, in the opinion of the Engineer or designated representative, test results appear unrepresentative, additional testing may be authorized. The retesting will be at the expense of the Contractor and the results of the retesting shall be averaged with the results of the original testing. If the results of retesting indicate that the original test results were erroneous, the original test results will be discarded. In the instance of erroneous original test results the subsequent first set of retests will be at the expense of the City of Austin.

Pavements with low-density results may be recored; but the pavement shall not receive any additional compactive effort.

Pavements that will not or cannot be cored within 48 hours shall be closed to both public and construction traffic.

340S.12 Acceptance Plan

For the purpose of the Acceptance Plan only, the "Paving Project" of each of the specified mixture types shall be defined by the Engineer or designated representative before the paving operation begins

Considerations for defining the Paving Project shall include paving operations staged due to traffic considerations, pavement structural section (i.e. with varying layer thicknesses), time required for paving, changes to the Job Mix Formula, phasing of large projects, or other factors affecting the consistency in the production, lay-down/compaction, use of completed portions, and/or aging of in-place material.

Acceptability of the completed pavement structure for a Paving Project shall be based on all daily averages of three test results and when approved by the Engineer or designated representative the overall average of all test results for each of the mixture/layer types specified on the Drawings.

Pay adjustments for two or more acceptance factors shall be accumulative. Pay adjustments of 100% unit price reduction shall require removal and replacement of the Work. Replacement materials shall be subject to all requirements of this specification. Alternatively, the Engineer or designated representative may allow the Work to remain in place without payment provided that the Work is warranted for an extended period under conditions as determined by the Engineer or designated representative. The decision of the Engineer or designated representative related to the removal and replacement of the Work shall be the final authority.

A. Non-Pay-Adjustment Acceptance Factors:

1 Surface Characteristics: Unless otherwise directed by the Engineer or designated representative, all pavements shall be tested for smoothness. Surfaces shall be tested with a 10-foot (3.05 meter) straightedge parallel to the roadway centerline and perpendicular to the centerline on flat, cross-slope sections. Maximum allowable deviation in 10 feet shall be 1/8 inch (1-mm per meter) parallel to the centerline and 1/4 inch (2-mm per meter) perpendicular to the centerline. Sections exceeding these maximums shall be corrected to the satisfaction of the Engineer or designated representative. The completed surface must meet the approval of the Engineer or designated representative for surface smoothness, finish and appearance.

If the surface ravels, ruts or deteriorates in any manner prior to the end of the warranty period, it will be the Contractor's responsibility to correct this condition at its own entire expense to the satisfaction of the Engineer or designated representative in conformance with the requirements of this specification.

For HMAC rehabilitation and overlay projects, if cracks develop in the pavement surface within the one-year warranty period, the Contractor shall seal the cracks in accordance with Standard Specification Item No. 313S, "Cleaning and/or Sealing Joints and Cracks (Asphaltic Concrete). Payment for this work will be measured and paid for as Mobilization (LS) and Crack Sealing (LF).

For new HMAC roadways constructed in accordance with the Drawings and specifications, if cracks less than 1/4 inch (6 mm) in width develop in the pavement surface within the one year warranty period the Contractor shall seal the cracks in accordance with Standard Specification Item No. 313S, "Cleaning and/or Sealing Joints and Cracks (Asphaltic Concrete). Payment for this Work will be measured and paid for as Mobilization (LS) and Crack Sealing (LF).

If cracks equal to or greater than 1/4 inch (6 mm) in width develop in the pavement surface within the one-year warranty period, the cracking shall be reviewed and evaluated by the Engineer or designated representative before corrective action is taken.

2. Stability: Stability test results shall be used as indicators of potential problems. Where stability test results fall below the range specified in this specification, additional tests shall be taken as directed by the Engineer or designated representative for further evaluation and monitoring of the paving mixture. This additional stability testing will be at the expense of the Contractor. When, in the opinion of the Engineer or designated representative, the stability is deemed unacceptable for the intended use of the pavement, the paving mixture shall be removed and replaced to the limits indicated by test results or may be left in place on conditions acceptable to the Engineer or designated representative. When the paving mixture is removed and replaced, it shall be at the sole expense of the Contractor.

3. Laboratory Density: Laboratory density results as determined by TxDOT Test Method Tex-207-F shall be used as indicators of potential problems. Where laboratory density test results are less than 94.5% or more than 97.5% of mix design maximum density, additional tests shall be taken as directed by the Engineer or designated representative for further evaluation and monitoring of the paving mixture. This additional laboratory density testing will be at the expense of the Contractor. When, in the opinion of the Engineer or designated representative, the laboratory density is deemed unacceptable for the intended use of the pavement, the paving mixture shall be removed and replaced to the limits indicated by test results.

   The removal and replacement of the paving mixture shall be at the sole expense of the Contractor.

4. Limited Areas: Irrespective of an acceptable overall Paving Project average for any or all of the Pay-Adjustment Acceptance Factors, limited substandard portions of the Work, as determined by the Engineer or designated representative, shall be remedied or removed and replaced to the satisfaction of the Engineer or designated representative at the sole expense of the Contractor.

B. Pay-Adjustment Acceptance Factors: Contract unit prices shall be adjusted for paving mixtures that fail to meet acceptance criteria for gradation, asphalt content, density and mat thickness in accordance with the following:

Gradation Acceptance Schedule (TEX-210-F)

Sieve	Deviation From Job Mix Formula		Percent Contract Unit Price Reduction
	Daily Average	Overall Average	
Total retained on No. 10 (2.00 mm)	± 6.5 6.6±	± 5.0 5.1±	0 10
Passing No. 200 (75 µm)	± 3.9 4.0±	± 3.0 3.1±	0 5

Asphalt Content Acceptance Schedule (TEX-210-F, PartII)

Deviation from the Job Mix Formula		Percent Contract Unit Price Reduction	
Daily Average	Overall Average	Local Streets*	All Others
± 0.5	± 0.4	0	0
±0.51 to ±0.60	±0. 41 to ±0.50	15	25
+0.61 to +0.70	+0.51 to +0.60	25**	100; Remove and Replace
-0.61 to -0.70	-0.51 to -0.60	100: Remove and Replace	100; Remove and Replace
Over ±0.70	Over ±0.60	100: Remove and Replace	100; Remove and Replace

*A local or residential street that serves as access to residence or other abutting property.

**If the street has an ADT of 500, or less, with 1%, or less, of truck traffic, plus a 2 year warranty; otherwise, Remove and Replace

Density Acceptance Schedule (TEX-207-F/TEX-227-F)

*Percent Density		Percent Contract Unit Price Reduction	
Daily Average	Overall Average	1-1/2" (38 mm) Thickness or Greater	Less than 1-1/2" (38 mm) Thickness
Above 96.5	Above 96	100; Remove and Replace	100; Remove and Replace
90.5 to 96.5	91 to 96	0	0
90.5 to 87.6	90.9 to 88.1	0.625 per 0.10% deficiency in density	0.50 per 0.10% deficiency in density
Less than 87.6	Less than 88.1	100: Remove and Replace	100; Remove and Replace

*Core bulk density divided by max. theoretical density

Thickness Acceptance Schedule

Variance Percent of Thickness		Percent Contract Unit Price Reduction
Daily Average	Overall Average	
0 – 15.0	0 - 10	0
15.1 – 20.0	10.1 - 16	20
20.1 – 30.0	16.1 - 25	50
Over 30.0	Over 25	100; Remove and Replace or mill/overlay 1" (25 mm) minimum

The Density Acceptance Schedule For Irregularly Shaped Areas; Hike And Bike Trails And Utility Trenches (see following table) will apply to utility trenches of widths less than 4 feet

(1.2 meter) and to irregular shaped areas and hike and bike trails in which an appropriate rolling pattern cannot be established making it difficult to achieve compaction.

Density Acceptance Schedule For Irregularly Shaped Areas; Hike And Bike Trails and Utility Trenches (TEX-207-F/TEX-227-F)

*Percent Density	Percent Contract Unit Price Reduction	
Daily Average	1-1/2" (38 mm) Thickness or Greater	Less than 1-1/2" (38 mm) Thickness
Above 96.5	100; Remove and Replace	100; Remove and Replace
96.5 to 89.0	0	0
89.0 to 86.1	0.625 per 0.10% deficiency in density	0.50 per 0.10% deficiency in density
Less than 86.1	100: Remove and Replace	100; Remove and Replace
*Core bulk density divided by maximum theoretical density		

The Density Acceptance Schedule will apply to utility trenches 4 feet (1.2 meter) or wider.

Core thicknesses greater than Drawing requirements shall be factored into the average thickness calculation as the Drawing required thickness. If total thickness of lift(s) proves to be less than required, the Contractor may remove and replace the overlay deficient areas as agreed to by the Engineer or designated representative. Overlays to correct thickness deficiencies shall be not less than one (1) inch (25-mm) thick. Overlays shall require milling of the asphalt in order to prevent a “featheredge” of the overlaying pavement.

The extent of the area to be overlaid or removed and replaced shall be determined by additional cores with thicknesses greater than or equal to the required thickness. All additional coring that is necessary to determine the area shall be paid for by the Contractor.

340S.13 Measurement

Work performed and material placed shall be measured under one of the following methods. When Drawing quantity measurement is specified, adjustment of quantity may be made as follows. If the quantity measured as outlined vary from those shown on the Drawings by more than 5%, either party to the Contract may request in writing and adjustment of the quantity by each separate bid item. The party to the Contract which requests the adjustment shall present to the other party one copy of measurements and calculations showing the revised quantity in question. This revised quantity, when approved by the Engineer or designated representative, shall constitute the final quantity for which payment will be made. However, no adjustment will be made for any quantity, which exceeds the Drawing required thickness.

A. Method A: Asphaltic concrete pavement shall be measured by the ton (2,000 pounds) of the type actually used in completed and accepted Work in accordance with the Drawings and specifications.

   The measurement shall be made on approved truck scales that meet the requirements of the National Institute of Standards and Technology Handbooks 44 and 112 except that the required accuracy shall be 0.4 percent of the load being weighed. The Contractor shall furnish a report of calibration from a scale mechanic licensed by the Texas Department of Agriculture certifying that the scales meet this requirement.

B. Method B: Asphaltic concrete pavement shall be measured by the square yard of specified total thickness of the type of paving mixture actually used in completed and accepted Work in

accordance with Drawings and specifications. Multiple lifts of the same type shall be considered as one for square yard measurement purposes.

C. Method C: Asphaltic concrete pavement shall be measured by the lineal foot of specified total thickness of the type of paving mixture actually used in completed and accepted Work in accordance with Drawings and specifications. Multiple lifts of the same type shall be considered as one for linear foot measurement purposes.

340S.14 Payment

Work performed and materials furnished as prescribed by this item and measured as provided under "Measurement" will be paid for at the unit bid prices or pay adjusted unit price for Hot Mix Asphaltic Concrete Pavement, of the types and thicknesses specified. The unit bid prices shall include full compensation for furnishing all labor, equipment, time, materials and incidentals necessary to complete the Work.

Removal of existing hot mix asphalt concrete transition areas prior to overlay, tack coat, saw cutting and temporary pavement markings will not be measured or paid for directly but shall be included in the unit price bid for Standard Specification Item No. 340S, "Hot Mix Asphaltic Concrete Pavement".

Payment for Work meeting these specifications will be made under one of the following:

Pay Item No. 340S-A:	Hot Mix Asphaltic Concrete Pavement, Type ____,	Per Ton.
Pay Item No. 340S-B:	Hot Mix Asphaltic Concrete Pavement, ___Inches, Type ____,	Per Square Yard.
Pay Item No. 340S-C:	Hot Mix Asphaltic Concrete Pavement, ___Inches, Type ____,	Per Lineal Foot.
Pay Item No. 340S-PQ:	Hot Mix Asphaltic Concrete Pavement, ___Inches, Type ____, Plan Quantity,	Per Ton
Pay Item No. 340S-L:	Hot Mix Asphaltic Concrete Pavement, ___In., Type ____, Level-up Course,	Lump Sum.
Pay Item No. 340S-M:	Crack Sealing Mobilization,	Lump Sum.
Pay Item No. 340S-S:	Crack Sealing,	Per Lineal Foot.

End

SPECIFIC CROSS REFERENCE MATERIALS
Special Specification Item 340S "Hot Mix Asphaltic Concrete Pavement"

City of Austin Standard Specifications

Designation	Description
Item No. 230S	Rolling (Flat Wheel)
Item No. 232S	Rolling (Pneumatic Tire)
Item No. 301S	Asphalts, Oils and Emulsions
Item No. 307S	Tack Coat
Item No. 313S	Cleaning and/or Sealing Joints and Cracks (Asphaltic Concrete)

Texas Department of Transportation: Manual of Testing Procedures

Designation	Description
Tex-106E	Method of Calculating the Plasticity Index of Soils
Tex-107E	Determination of Bar Linear Shrinkage of Soils
Tex-200-F	Sieve Analysis of Fine and Coarse Aggregates
Tex-203-F	Sand Equivalent Test
Tex-204-F	Design of Bituminous Mixtures
Tex-207-F	Determination of Density of Compacted Bituminous Mixtures
Tex-208-F	Test for Stabilometer Value of Bituminous Mixtures
Tex-210-F	Determination of Asphalt Content of Bituminous Mixtures by Extraction
Tex-212-F, Part II	Determination of Moisture Content of Bituminous Mixtures (by oven drying)
Tex-217-F	Determination of Deleterious Material and Decantation Test For Coarse Aggregates
Tex-227-F	Theoretical Maximum Specific Gravity of Bituminous Mixtures
Tex-410-A	Abrasion of Coarse Aggregate Using the Los Angeles Machine
Tex-460-A	Determination of Crushed Face Particle

Texas Department of Transportation: Standard Specifications for Construction and Maintenance of Highways, Streets, and Bridges

Designation	Description
Item 340	Hot Mix Asphalt Concrete Pavement

RELATED CROSS REFERENCE MATERIALS
Special Specification Item 340S "Hot Mix Asphaltic Concrete Pavement"

City of Austin Standard Specifications

Designation	Description
Item No. 206S	Asphalt Stabilized Base
Item No. 210S	Flexible Base
Item No. 306S	Prime Coat
Item No. 310S	Emulsified Asphalt Treatment
Item No. 311S	Emulsified Asphalt Repaving
Item No. 320S	Two Course Surface Treatment

Texas Department of Transportation: Manual of Testing Procedures

Designation	Description
Tex-215-F	Determination of Asphalt Content of Rock Asphalt By Hot Solvent Method
Tex-224-F	Determination of Flakiness
Tex-400-A	Method of Sampling Stone, Gravel, Sand and Mineral Aggregates

Tex-411-A	Soundness of Aggregate by Use of Sodium Sulfate or magnesium Sulfate
Tex-438-A	Accelerated Polish Test for Aggregate

430S.1 Description

This item shall govern Portland Cement (p.c.) concrete curb, p.c. concrete curb and gutter with reinforcing steel or p.c. concrete laydown curb as required, that is constructed in accordance with this specification on an approved subgrade and base in conformity with Standard Detail Series 430S and the lines, grades, section indicated on the Drawings or as established by the Engineer or designated representative.

This specification is applicable for projects or work involving either inch-pound or SI units. Within the text, the inch-pound units are given preference followed by SI units shown within parentheses.

430S.2 Submittals

The submittal requirements of this specification item include:

A. Class A p.c. concrete mix design,

B. Type of Installation (i.e. P.C. Concrete Curb and Gutter or P.C. Concrete Curb or P.C. Concrete Laydown Curb) and construction details (i.e. base, reinforcing steel, joints, curing membrane),

C. Identification of the type, source, mixture, Pure Live Seed (PLS) and rate of application of the seeding.

430S.3 Materials

A. Concrete

The Portland cement (p.c.) concrete shall conform to Class A Concrete, Section 403S.7 (Table 4) of Standard Specification Item No. 403S, "Concrete for Structures" or Sections 360S.4 and 360S.6 of Standard Specification Item No. 360S, "Concrete Pavement" when curb and gutter is to be constructed integral with the pavement.

B. Reinforcing Steel

Reinforcing steel shall conform to Standard Specification Item No. 406S, "Reinforcing Steel".

C. Expansion Joint Materials

Expansion joint materials shall conform to Standard Specification Item No. 408S, "Expansion Joint Materials".

D. Membrane Curing Compound

Membrane curing compound shall conform to Standard Specification Item No. 409S, "Membrane Curing".

E. Flexible Base

Aggregate shall conform to Standard Specification Item No. 210S, "Flexible Base".

430S.4 Construction Methods

A. Subgrade and Base Preparation

Subgrade for curb and gutter shall be excavated and prepared to depth and width requirements indicated on the Drawings, including a minimum of 12 inches (300 mm) behind the curb, unless a greater width is indicated on the Drawings. The subgrade shall be shaped to the line, grades, cross section and dimensions indicated on the Drawings. A minimum of 4 inches (100 mm) of flexible base shall be spread, wetted and thoroughly compacted under curb and gutter as specified in Standard Specification Item No. 210S, "Flexible Base". If dry, the base shall be sprinkled lightly with water before p.c. concrete is deposited thereon.

B. C & G Forms

Forms shall be of metal, well-seasoned wood or other approved material. The length of the forms shall be a minimum of 10 feet (3 meters). Flexible or curved forms shall be used for curves of 100-foot (30 meter) radius or less. Wood forms for straight sections shall be not less than 2 inches (50 mm) in thickness. Forms shall be a section, that is satisfactory to the Engineer or designated representative, of the depth required and clean, straight, free from warp and, if required, oiled with a light form oil. All forms shall be securely staked to line and grade and maintained in a true position during the placement of p.c. concrete.

C. Reinforcing Steel

The reinforcing steel, if required, shall be placed as shown on the typical section of the Drawings. Care shall be exercised to keep all steel in its proper location during p.c. concrete placement.

D. Joints

Joints shall be of the type and spacing shown on the Drawings. Expansion joint material, 3/4 inch (19 mm) in thickness, shall be provided at intervals not to exceed 40 feet (12 meters) and shall extend the full width and depth of the p.c. concrete. Weakened plane joints shall be made 3/4 inch (19 mm) deep at 10-foot (3 meters) intervals. All joint headers shall be braced perpendicular and at right angles to the curb.

Two round smooth dowel bars, 1/2 inch (12.5 mm) in diameter and 24 inches (600 mm) in length, shall be installed at each expansion joint. Sixteen inches (400 mm) of one end of each dowel shall be thoroughly coated with hot oil, asphalt or red lead, so that it will not bond to the concrete. The dowels shall be installed with a dowel sleeve on the coated end as indicated on the Drawings or equivalent method as directed by the Engineer or designated representative.

E. P.C. Concrete Placement and Form Removal

Concrete shall be placed in the forms and properly consolidated. Within 1 hour after p.c. concrete placement, a thin coating, that is no more than 1/2 inch (12.5 mm) nor less than 1/4 inch (6.25 mm) thick of finish mortar, composed of 1 part Portland Cement to 2 parts fine aggregate, shall be worked into the exposed faces of the curb and gutter by means of a "mule". After the p.c. concrete has become sufficiently set, the exposed edges shall be rounded by the use of an edging tool to the radii indicated on Standard Detail 430S-1. The entire exposed surface of the curb and gutter shall be floated to a uniform smooth surface, and then finished with

a camel hairbrush to a gritty texture. The forms shall remain in place a minimum of 24 hours unless approved otherwise by the Engineer or designated representative.

After removal of the forms, any minor honeycombed surfaces shall be plastered with a mortar mix as described above. Excessively honeycombed curb and gutter, as determined by the Engineer or designated representative, shall be completely removed and replaced when directed.

F. Curing

Immediately after finishing the curb, concrete shall be protected by a membrane curing conforming to Standard Specification Item No. 409S, "Membrane Curing".

After a minimum of 3 days curing and before placement of the final lift of the base course, the curb shall be backfilled to the full height of the p.c. concrete, tamped and sloped as directed by the Engineer or designated representative. The upper 4 inches (100-mm) of backfill shall be of clean topsoil that conforms to Standard Specification Item No. 130S, "Borrow" and is free of stones and debris.

G. Seeding in Turf Areas

When turf is to be established, preparation of the seedbed shall conform to Item No. 604S, "Seeding for Erosion Control".

430S.5 Measurement

Accepted work as prescribed by this item will be measured by the lineal foot (lineal meter: 1 lineal meter equals 3.281 lineal feet) of p.c. concrete curb and gutter, p.c. concrete curb and/or p.c. concrete laydown curb, complete in place.

430S.6 Payment

The work performed as prescribed by this item will be paid for at the unit bid price per lineal foot for "P.C. Concrete Curb and Gutter" or P.C. Concrete Curb. The price shall include full compensation for all work as set forth and described under payment Method A and/or B.

A. Method A (Pay Item No. 430S-A)

This payment method shall include all the work performed for "P.C. Concrete Curb and Gutter" complete, at the unit bid price. The unit bid price shall include full compensation for excavation, preparation of the subgrade, furnishing and placing all concrete and base material, reinforcing steel, dowels, expansion joint material, curing material, backfill and for all other materials, manipulations, labor, tools, equipment and incidentals necessary to complete the work.

B. Method B (Pay Item No. 430S-B)

This payment method includes all the work performed for "P.C. Concrete Curb and Gutter", complete, at the unit bid price. The unit bid price shall include full compensation for fine grading, furnishing and placing concrete and reinforcing steel, dowels, expansion joint material, curing material, backfill and for all other materials, manipulations, labor, tools, equipment and incidentals necessary to complete the work.

C. Method C (Pay Item No. 430S-C)

This payment method includes all the work performed for " P.C. Concrete Curb" complete, at the unit bid price. The unit bid price shall include full compensation for excavation, furnishing and placing all concrete and base material, reinforcing steel, dowels, expansion joint material, curing material, backfill and for all other materials, manipulations, labor, tools, equipment and incidentals necessary to complete the work.

D. Method D (Pay Item No. 430S-D)

This payment method includes all the work performed for "P.C. Concrete Curb" complete, at the unit bid price. The unit bid price shall include full compensation for fine grading, furnishing and placing concrete and reinforcing steel, dowels, expansion joint material, curing material, backfill and for other materials, manipulations, labor, tools, equipment and incidentals necessary to complete the work.

E. Method E (Pay Item No. 430S-E)

This payment method shall include all the work performed for "P.C. Concrete Laydown Curb" complete, at the unit bid price. The unit bid price shall include full compensation for excavation, preparation of the subgrade, furnishing and placing all concrete and base material, reinforcing steel, dowels, expansion joint material, curing material, backfill and for all other materials, manipulations, labor, tools, equipment and incidentals necessary to complete the work

F. Method F (Pay Item No. 430S-F)

This payment method includes all the work performed for "P.C. Concrete Laydown Curb" complete, at the unit bid price. The unit bid price shall include full compensation for fine grading, furnishing and placing concrete and reinforcing steel, dowels, expansion joint material, curing material, backfill and for other materials, manipulations, labor, tools, equipment and incidentals necessary to complete the work.

Payment will be made under one of the following:

Pay Item No. 430S-A:	P.C. Concrete Curb and Gutter (Excavation)	Per Lineal Foot.
Pay Item No. 430S-B:	P.C. Concrete Curb and Gutter (Fine Grading)	Per Lineal Foot.
Pay Item No. 430S-C:	P.C. Concrete Curb (Excavation)	Per Lineal Foot.
Pay Item No. 430S-D:	P.C. Concrete Curb (Fine Grading)	Per Lineal Foot.
Pay Item No. 430S-E:	P.C. Concrete Laydown Curb (Excavation)	Per Lineal Foot.
Pay Item No. 430S-F:	P.C. Concrete Laydown Curb (Fine Grading)	Per Lineal Foot.

End

SPECIFIC CROSS REFERENCE MATERIALS
Specification Item No. 430S, “P.C. Concrete Curb and Gutter”

City of Austin Standard Specifications

Designation	*Description*

Item No 130S	Borrow
Item No 210S	Flexible Base
Item No. 360S	Concrete Pavement
Section 360S.4 of Item 360S	Proportioning of Concrete
Section 360S.6 of Item 360S	Concrete Mixing and Placing
Item No. 403S	Concrete for Structures
Section 403S.7 of Item No. 403S	(Table 4)
Item No. 406S	Reinforcing Steel
Item No. 408S	Expansion Joint Materials
Item No. 409S	Membrane Curing
Item No. 604S	Seeding for Erosion Control

City of Austin Standard Details

Designation	*Description*
430S-1	Curb and Gutter Section
430S-3	Curb Expansion Joint Dowel Detail
430S-4	Concrete Backfill Under Curb & Gutter
430S-5	Reinforcing Bar Detail at Existing Curb and Gutter

RELATED CROSS REFERENCE MATERIALS
Specification Item No. 430S, “P.C. Concrete Curb and Gutter”

City of Austin Standard Specifications

Designation	*Description*
Item No. 301S	Asphalts, Oils and Emulsions
Item No. 302S	Aggregates for Surface Treatments
Item No. 340S	Hot Mix Asphaltic Concrete Pavement
Item No. 431S	Machine Laid PCC Curb and Gutters
Item No. 433S	P.C. Concrete Driveways
Item No. 434S	P.C. Concrete Medians and Islands
Item No. 436S	P.C. Concrete Valley Gutters
Item No. 606S	Fertilizer

Item No. 432S
Portland Cement Concrete Sidewalks

432S.1 Description

This item shall govern the construction of Portland cement concrete sidewalks (Standard Detail No. 432S-1), as herein specified, on an approved subgrade and in conformance with the lines, grades and details indicated on the Drawings or as established by the Engineer or designated representative.

This specification is applicable for projects or work involving either inch-pound or SI units. Within the text inch-pound units are given preference followed by SI units shown within parentheses.

432S.2 Submittals

The submittal requirements of this specification item include:

A. Class A portland cement (p.c). concrete mix design,

B. Type of Installation (i.e. Type I, Type II, etc.) and construction details (i.e. cushion layer, base, reinforcing steel, joints, curing membrane),

C. Identification of the type, source, mixture, Pure Live Seed (PLS) and rate of application of the seeding.

D. Number, manufacturer, model, construction, finish and installation details of streetscape appurtenances of bicycle racks, benches, chairs, trash receptacles, streetlights, tree wells and above grade tree planters [for sidewalks, 12 feet (3.66 meters) or wider].

432S.3 Materials

A. Portland Cement Concrete

Portland cement concrete shall be Class A conforming to Specification Item No. 403S, "Concrete for Structures" or Specification Item No. 407S, "Fibrous Concrete".

B. Reinforcement

Reinforcement shall conform to Specification Item No. 406S, "Reinforcing Steel" or Specification Item No. 407S, "Fibrous Concrete".

C. Expansion Joint Materials

Expansion joint materials shall conform to Specification Item No. 408S, "Expansion Joint Materials".

D. Membrane Curing Compound

Membrane curing compound shall conform to Specification Item No. 409S, "Membrane Curing".

432S.4 Construction Methods

The subgrade shall be excavated in accordance with Specification Item No. 111S, “Excavation”, prepared in accordance with Specification Item No. 201S, “Subgrade Preparation”, shaped to the lines, grades and cross section as indicated on the Drawings or as directed by the Engineer or designated representative and thoroughly compacted in accordance with Specification Item No. 201S. A granular cushion of a minimum thickness of 2 inches (50 mm) but maximum thickness of 5 inches (125 mm), composed of crusher screenings, gravel and sand, crushed rock or coarse sand,

shall be spread, wetted thoroughly, tamped and leveled. The granular cushion shall be moist at the time the Portland cement concrete is placed.

If the subgrade is undercut by more than 4 inches (100 mm) or the elevation of the natural ground is more than 4 inches (100 mm) below "top of subgrade", then a necessary backfill/embankment layer of an approved material shall be placed and compacted with a mechanical tamper. Hand tamping will not be permitted.

Where the subgrade is rock or gravel, 70 percent of which is rock; the 2-inch (50 mm) cushion need not be used. The Engineer or designated representative will determine if the subgrade meets the above requirements.

Sidewalk forms shall be constructed of metal or well-seasoned wood not less than 2 inches (50 mm) in thickness, with a section satisfactory to the Engineer or designated representative. The forms shall be clean, straight, and free from warp with a depth equal to the thickness of the finished work. All forms shall be securely staked to line and grade and maintained in a true position during the deposition of Portland cement concrete. Before p.c. concrete is placed, the forms shall be thoroughly oiled with a light form oil.

Expansion joint material 3/4 inch (19 mm) thick, shall be provided where the new construction abuts an existing structure, sidewalk or driveway. Similar expansion material shall be placed around all obstructions protruding through the sidewalk. The expansion joint material shall be placed vertically and shall extend the full depth of the p.c. concrete. Maximum spacing of expansion joints shall be 40 feet (12 meters) as indicated on the Drawings or as directed by the Engineer or designated representative. Weakened plane joints shall be spaced at 5 feet (1.5 meters) on center. Normal dimensions of the weakened plane joints shall be 1/4 inch wide and 3/4 inch deep (6 mm wide and 19 mm deep). All joints shall be constructed perpendicular (90 degrees) to the centerline of walk and shall match any previously placed concrete joints. For sidewalks with widths exceeding 6 feet (1.83 meters) longitudinal weakened-plane tooled joints shall be provided as indicated on the Drawings or as directed by the Engineer or designated representative.

Reinforcement for sidewalks shall consist either of polypropylene fibrillated fibers or 6” x 6” x W1.4 x W1.4 (150mm x 150mm x MW9 x MW9) welded wire fabric or one layer #3 (10M) reinforcing bars, placed no more than 18 inches (450 mm) on center both directions. All reinforcement shall be accurately placed at slab mid-depth, equidistant from the top and bottom of the p.c. concrete and held firmly in place by means of bar supports of adequate strength and number that will prevent displacement and keep the steel at its proper position during the placement of the p.c concrete. In no instance shall the steel be placed directly on the subgrade or sand cushion layer.

Prior to placement of the concrete, the reinforcement installation shall be inspected by the Engineer or designated representative to insure conformance with the drawings, specifications and this item. In addition care shall be exercised to keep all steel in its proper position during placement of the p.c. concrete. If during placement of the concrete, the reinforcement is observed to loose bar support, float upward or move in any direction, the placement shall be stopped until corrective action is taken.

Splices in wire fabric shall overlap sufficiently to allow two pairs of transverse wires to be tied together and no splice of less than 6 inches (150 mm) will be permitted. Splices in the #3 (10M) bars shall have a minimum lap of 12 inches (300 mm).

Where driveways cross sidewalks, additional reinforcing shall be placed in the sidewalk as indicated on the Drawings.

Portland cement concrete shall be placed in the forms and spaded, tamped and thoroughly consolidated until it covers the entire surface with a monolithic finish. The top surface shall be floated and troweled to a uniform smooth surface; then finished with a broom or wood float to a gritty texture unless indicated otherwise on the Drawings or as directed by the Engineer or designated representative. The outer edges and joints shall be rounded with approved tools to a

1/4-inch (6 mm) radius. Care will be exercised to prevent loss of dummy joints or rounded edges when applying the brush finish.

Portland cement concrete sidewalk ramps shall be formed to produce a finished surface with detectable warnings (Standard Detail 432S-2A) in accordance with the requirements of the American Disabilities Act and Texas Accessibility Standards (TAS), including Sections 4.29.2 and A4.29.2. The p.c. concrete sidewalk ramps shall be constructed in accordance with appropriate City of Austin Standard Details (Standard Details 432S-3, 432S-3A through 432S-3H, 432S-5, 432S-5A, 432S-5B, etc.).

Detectable warning for the ramps shall consist of raised truncated domes with a diameter of nominal 0.9 inch (23 mm), a height of nominal 0.2 inch (5 mm) and center-to-center spacing of nominal 2.35 inches (60 mm) and shall contrast visually with adjoining surfaces, either light on dark or dark-on-light. The material used to provide contrast shall be an integral part of the walking surface.

When indicated on the Drawings or as directed by the Engineer or designated representative, the construction of the sidewalk ramp shall include the installation of interlocking concrete paving units (Standard Specification Item No. 480S, "Concrete Paving Units"). The concrete paving units shall be constructed in accordance in accordance with Standard Specification Item No. 485S, "Concrete Paving Units for Sidewalk Ramps) and appropriate City of Austin Standard Details (Standard Details 432S-2A, 432S-3, 432S-3A through 432S-3H, 432S-5, 432S-5A and 432S-5B).

At the proper time after finishing, the surface shall be protected by a membrane, compound curing agent or by wetted cotton or burlap mats, conforming to Item No.409S, "Membrane Curing". The sides of the p.c. concrete shall be cured in the forms. If the forms are removed during the curing process, the curing shall be continued by the placement of fill against the exposed concrete edges or by other procedures conforming to Item No. 410S, "Concrete Structures". The top 4 inches (100 mm) of fill shall be clean topsoil conforming to Item No. 604S, "Seeding for Erosion Control".

Existing sidewalk that is scheduled for removal and replacement shall be removed and the underlying material shaped to the lines, grades and cross section as indicated in the drawings or as directed by the Engineer or designated representative. The removal and/or relocation of obstructions, including but not limited to signs, trash cans and benches on concrete pads, abandoned manholes, sprinkler control valves and landscaping, shall be performed, as indicated on the drawings, in a manner acceptable to the Engineer or designated representative. Removal and/or relocation of obstructions will be considered incidental work to this item and will not be paid for directly.

Existing PVC pipe drains in and behind curb shall be removed and replaced as required in new sidewalk and/or curb and gutter. In areas of proposed sidewalk construction, where curb and gutter is to remain in place, existing PVC pipe shall be cut far enough behind the back of curb to allow sufficient room for joint fittings to connect to new or salvaged PVC pipe.

The Contractor shall be responsible for removing and replacing mailboxes that are located in the construction area, while assuring that mail delivery will not be interrupted as a result of the construction activities. Mailboxes shall not be laid on the ground.

All necessary excavation, filling and grading of the slopes adjacent to the completed concrete sidewalks will be considered incidental work pertaining to this item and will not be paid for directly. The adjacent excavation and grading of the slopes shall be done in a manner acceptable to the Engineer or designated representative.

432S.5 Streetscape Furniture Installation Requirements

A. General General

Bicycle racks, benches and chairs, trash receptacles, tree wells and above grade tree wells and planters shall only be installed in sidewalks that are 12 feet (3.66 meters) or wider. When installation is indicated on the Drawings or directed by the Engineer or designated representative, these items shall be permanently installed as indicated in Standard Details 710S-4 and 710S-5; 432S-9B; 432S-7C, and 432S-7F; and 432S-8B. Above grade tree wells shall be installed in conformance with Standard Detail 432S-7E, while above grade tree planters shall be installed in conformance with Standard Detail Nos. 432S-7D and 432S-7G.

B. Location Requirements

1. Benches.

   Benches shall be placed either perpendicular to the curb with the center of the bench on line with trees and light poles and facing toward the building entry, or parallel to the building and within 6” (150 mm) of the building wall, facing out to the street.

   Bench siting shall be in conformance with Standard Detail No. 432S-9C in 12’ (3.6 M) or wider sidewalks and Standard Detail No. 432S-9D in sidewalks of width between 12’ (3.6 M) and 18’ (5.4 M).

2. Bike Racks.

   Bike racks are to be placed perpendicular to the curb with the centerline of the rack on line with trees and light poles.

   Bike rack siting shall be in conformance with Standard Detail No. 710S-6A in 12’ (3.6 M) or wider sidewalks and Standard Detail No. 710S-6B in sidewalks of width between 12’ (3.6 M) and 18’ (5.4 M).

3. Trash Receptacles.

   Trash receptacles shall either be placed along the curb, with the center line of the receptacle on line with the trees and light poles, or shall be located at the building entry in alignment with the structural bay system of the building. If located at the entry there shall be no more than 1 foot (300 mm) clearance between the receptacle and the building wall.

   Trash receptacle siting adjacent to curb ramps within an intersection shall be in conformance with Standard Detail No. 432S-8C in 12’ (3.6 M) or wider sidewalks.

P432S.6 Pedestrian Railing

When a pedestrian railing installation is required along sidewalks for pedestrian protection as indicated on the Drawings or directed by the Engineer or designated representative, this type of pedestrian railing shall be permanently installed in conformance with one of the following designated Standard Details: 707S-1, 707S-2, 707S-3 or 707S-4.

When a pedestrian railing installation is required along portions of sidewalks identified as ‘ramps’ for ADA accessibility purposes as indicated on the Drawings or directed by the Engineer or designated representative, this type of pedestrian railing shall be permanently installed in conformance with one of the following designated Standard Details: 707S-2, 707S-3 or 707S-4.

432S.7 Measurement

Accepted work performed as prescribed by this item will be measured by the square foot (square meter: 1 square meter is equal to 10.764 square feet) of surface area of "Concrete Sidewalk".

Accepted work performed as prescribed by "Sidewalk Ramps" will be measured per each for the type of ramp indicated on the Drawings.

Accepted work performed as prescribed by "Streetscape Appurtenances" will be measured per each for the type of appurtenance indicated on the Drawings.

Accepted work performed as prescribed by "Pedestrian Railing" will be measured per lineal foot of the type of railing indicated on the Drawings.

432S.8 Payment

The work performed as prescribed by this item for concrete sidewalk will be paid for at the unit bid price per square foot for "Concrete Sidewalk" and/or "Sidewalks Reconstruction"; per each for "Concrete Sidewalk Ramps" and "Streetscape Appurtenances" or per lineal foot for "Pedestrian Railing".

The unit bid price for new sidewalk shall include full compensation for excavating and/or removal and/or relocating obstructions, vegetating adjacent areas disturbed by sidewalk construction, preparing the subgrade; for furnishing and placing all materials including cushion material, all reinforcement, bar supports, joints, expansion joint materials, and for any other materials, manipulations, labor, tools, equipment, finishing, curing and incidentals necessary to complete the work.

The unit bid price for sidewalk reconstruction shall include full compensation for excavating and/or removal of existing sidewalk and other obstructions, relocating obstructions, replacing PVC drain pipe, re-vegetating adjacent areas disturbed by sidewalk construction, preparing the subgrade; for furnishing and placing all materials including cushion material, all reinforcement, bar supports, joints, expansion joint materials, and for any other materials, manipulations, labor, tools, equipment, finishing, curing and incidentals necessary to complete the work.

The unit bid price for ramps shall include full compensation for preparing the subgrade when not included as a separate item; for furnishing and placing all materials, manipulation, labor, tools, equipment and incidentals necessary to complete the work. All necessary excavation, filling and grading of the slopes adjacent to the completed concrete paver units will be included in the unit price bid for the item of construction in which this item is used, unless included as a separate pay item in the Contract bid form.

The unit bid price for streetscape appurtenances shall include full compensation for the individual item (i.e. bench, chair, bicycle rack, trash receptacle, street light or above grade tree planter), as well as the removal of existing sidewalk, preparation of footings, furnishing and placing all materials, manipulation and finishing, labor, tools, equipment and incidentals necessary to complete the work.

The unit bid price for pedestrian railing shall include full compensation for the complete installation of the specific pedestrian railing including but not limited to preparation of footings or curb, furnishing and placing all materials, manipulation and finishing, labor, tools, equipment and incidentals necessary to complete the work.

Payment will be made under one of the following:

New Sidewalks

Pay Item 432S-4:	New P.C. Concrete Sidewalks, 4 Inch thickness	Per Square Foot.
Pay Item 432S-5:	New P.C. Concrete Sidewalks, 5 Inch thickness	Per Square Foot.
Pay Item 432S-6:	New P.C. Concrete Sidewalks, 6 Inch thickness	Per Square Foot.
Pay Item 432S-7:	New P.C. Concrete Sidewalks, 7 Inch thickness	Per Square Foot.

Sidewalks Reconstruction

Pay Item 432SR-4:	Reconstruct Concrete Sidewalks to 4 Inch thickness, including removal of existing sidewalk	Per Square Foot.
Pay Item 432SR-5:	Reconstruct Concrete Sidewalks to 5 Inch thickness, including removal of existing sidewalk	Per Square Foot.
Pay Item 432SR-6:	Reconstruct Concrete Sidewalks to 6 Inch thickness, including removal of existing sidewalk	Per Square Foot.
Pay Item 432SR-7:	Reconstruct Concrete Sidewalks to 7 Inch thickness, including removal of existing sidewalk	Per Square Foot.

Ramps

Pay Item 432S - RP-1:	P.C. Sidewalk Curb Ramp with Pavers (Type I)	Per Each.
Pay Item 432S-RP-1A:	P.C. Sidewalk Curb Ramp with Pavers (Type IA)	Per Each.
Pay Item 432S-RP-1B:	P.C. Sidewalk Curb Ramp with Pavers (Type IB)	Per Each.

Streetscape Appurtenances

Pay Item 432S-SAC-1	Streetscape Bench (____ inches in length)	Per Each.
Pay Item 432S-SAC-2	Streetscape Chair	Per Each.
Pay Item 432S-SAC-3	Streetscape Bicycle Rack	Per Each.
Pay Item 432S-SAC-4	Streetscape Trash Receptacle	Per Each.
Pay Item 432S-SAC-5	Streetscape Street Light	Per Each.
Pay Item 432S-SAC-7C	Streetscape Tree Well for Concrete Sidewalks	Per Each.
Pay Item 432S-SAC-7D	Streetscape Above Grade Tree Planters with Bench	Per Each.
Pay Item 432S-SAC-7E	Streetscape Above Grade Tree Well with Seat	Per Each.
Pay Item 432S-SAC-7F	Streetscape Tree Well without Grate	Per Each.
Pay Item 432S-SAC-7G	Streetscape Above Grade Galvanized Steel Tree Planters	Per Each

Pedestrian Railing

Pay Item 432S-PRC-1	Pedestrian Railing (Standard 707S-1)	Per LF.
Pay Item 432S-PRC-2	Pedestrian ADA Railing – Option 1 (Standard 707S-2)	Per LF.
Pay Item 432S-PRC-3	Pedestrian ADA Railing – Option 2 (Standard 707S-3)	Per LF.
Pay Item 432S-PRC-4	Pedestrian ADA Railing – Option 3 (Standard 707S-4)	Per LF.

End

SPECIFIC CROSS REFERENCE MATERIALS
Specification 432S, “P. C. Concrete Sidewalks”

City of Austin Standard Specifications

Designation	Description
Item No. 111S	Excavation
Item No. 201S	Subgrade Preparation
Item No. 403S	Concrete for Structures
Item No. 406S	Reinforcing Steel
Item No. 407S	Fibrous Concrete
Item No. 408S	Expansion Joint Materials
Item No. 409S	Membrane Curing
Item No. 410S	Concrete Structures
Item No. 480S	Concrete Paving Unit
Item No. 485S	Concrete Paving Units for Sidewalk Ramps
Item No. 604S	Seeding for Erosion Control

City of Austin Standard Details

Designation	Description
432S-1	Sidewalk
432S-2A	Detectable Warning-Paver
432S-3	Type I Curb Ramps-Full Intersection
432S-3A	Type I Curb Ramps-T Intersection
432S-3B	Type IA/IB Curb Ramps-Full Intersection
432S-3C	Type IA/IB Curb Ramps-T Intersection
432S-3D	Combined Curb Ramps-Full Intersection
432S-3E	Combined Curb Ramps-T Intersection
432S-3F	Combined Sidewalk Curb Ramp with Pavers
432S-3G	Combined Sidewalk Curb Ramp with Pavers within Limited ROW
432S-3H	Type I Curb Ramps within PC/PT of Curb and Gutter
432S-5	Type I Sidewalk Curb Ramp
432S-5A	Type IA Sidewalk Curb Ramp
432S-7C	Tree Well for New Trees Planted Within Concrete Sidewalk 3.6 M (12') or Greater
432S-7D	Above Grade Tree Planters
432S-7E	Above Grade Tree Well with Bench
432S-7F	Tree Well Without Grate
432S-7G	Above Grade Galvanized Steel Tree Planters
432S-8B	Trash Receptacle Installation in Concrete Sidewalk
432A-8C	Furnishing Location in 12' (3.6 M) or greater Trash Receptacle Siting
432S-9B	Bench/Chair Installation in Sidewalks
432S-9C	Furnishing Location in 12' (3.6 M) or greater Sidewalks-Bench Siting
432S-9D	Furnishing Location in Greater than 12' (3.6 M) or Less than 18' (5.4 M) Sidewalks-Bench Siting
707S-1	Pedestrian Railing
707S-2	Pedestrian ADA Railing – Option 1
707S-3	Pedestrian ADA Railing – Option 2
707S-4	Pedestrian ADA Railing – Option 3
710S-4	Bicycle Rack Installation in Concrete Sidewalks (Alternate 1)
710S-5	Bicycle Rack Installation in Concrete Sidewalks (Alternate 2)

710S-6A	Furnishing Location in 12' (3.6 M) or greater Sidewalks-Bicycle Rack Siting
710S-6B	Furnishing Location in Greater than 12' (3.6 M) or Less than 18' (5.4 M) Sidewalks-Bicycle Rack Siting

American Disabilities Act, Federal Register; Volume 56, No. 144; July 26, 1991
ADA Accessibility Guidelines For Building And Facilities

Designation	Description
Section 4.29	Detectable Warnings on Walking Surfaces
Section A4.29.2	Detectable Warnings on Walking Surfaces

Architectural Barriers; Texas Civil Statutes, Article 9102; June 14, 1995
Texas Accessibility Standards (TAS)

Designation	Description
Section 4.29	Detectable Warnings on Walking Surfaces
Section A4.29.2	Detectable Warnings on Walking Surfaces

RELATED CROSS REFERENCE MATERIALS

City of Austin Standard Contract Documents

Designation	Description
00700	General Conditions
01500	Temporary Facilities
01550	Public Safety and Convenience

City of Austin Utilities Criteria Manual

Designation	Description
Section 5.2.3	Utility Adjustments For Roadway Construction Projects

City of Austin Standard Specifications

Designation	Description
Item No. 102S	Clearing and Grubbing
Item No. 104S	Removing Portland Cement Concrete
Item No. 110S	Street Excavation
Item No. 132S	Embankment
Item No. 203S	Lime Treatment for Materials In Place
Item No. 204S	Portland Cement Treatment for Materials In Place
Item No. 230S	Rolling (Flat Wheel)
Item No. 232S	Rolling (Pneumatic Tire)
Item No. 234S	Rolling (Tamping)
Item No. 236S	Rolling (Proof)
Item No. 360S	Concrete Pavement
Item No. 402S	Controlled Low Strength Material
Item No. 404S	Pneumatically Placed Concrete
Item No. 405S	Concrete Admixtures
Item No. 411S	Surface Finishes for Concrete

509S.1 Description

This item shall govern the designing, furnishing, installing, maintaining and removing or abandoning of temporary Excavation Safety Systems consisting of trench shields, aluminum hydraulic shoring, timber shoring, trench jacks, tieback or braced sheeting, tieback slurry walls, soil nailing, rock bolting, tieback or braced soldier piles and lagging, and other systems for protecting workers in excavations. This item shall also govern the designing and constructing of sloping and benching systems for protecting workers in excavations.

At a minimum, the Excavation Safety Systems shall conform to United States Department of Labor Rules 29 CFR, Occupational Safety and Health Administration, Part 1926 Safety and Health Regulations for Construction, Subpart P, Excavation (hereinafter called OSHA).

This specification is applicable for projects or work involving either inch-pound or SI units. Within the text, the inch-pound units are given preference followed by SI units shown within parentheses.

509S.2 Definitions

"Competent Person" shall mean one who is capable of identifying existing and predictable hazards in the surroundings, or working conditions which are unsanitary, hazardous, or dangerous to employees, and who has authorization to take prompt corrective measures to eliminate them. The competent person shall be capable of interpreting the manufacturer's data sheets and interpreting and implementing the Excavation Safety System Plan.

An "Excavation" shall mean any cut, cavity, trench, or depression in an earth surface, formed by earth removed by the Contractor. The Contractor shall provide an Excavation Safety System for all excavations except when 1) the excavation is in stable rock as determined by the Texas-licensed Professional Engineer who prepared the Contractor's Excavation Safety System Plan or 2) the excavation is less than 5 feet (1.52 m) in depth and examination of the ground by the Contractor's competent person provides no indication of a potential cave-in.

"Trench" (trench excavation) shall mean any narrow excavation (in relation to its length) made below the surface of the ground. In general, the depth shall be greater than the width, but the width of a trench (measured at the bottom) shall not be greater than 15 feet (4.56 m). Excavation Safety Systems for such trenches shall be defined as "Trench Excavation Safety Protective Systems".

If the Contractor installs or constructs forms or other structures in an excavation such that the dimension measured from the forms or structures to the sides of the excavation is reduced to 15 feet (4.6 m) or less (measured at the bottom of the excavation), those excavations shall also be defined as a Trench if workers must enter it. Excavation Safety Systems for such trenches shall also be defined as "Trench Excavation Safety Protective Systems".

509S.3 Excavation Safety System Submittals

A. The Notice to Proceed with construction may be issued by the Owner before the Contractor has submitted the necessary Excavation Safety Plan(s); however, excavation shall not proceed until the Owner has received the Contractor's Excavation Safety Plan(s) for the Project.

B. Prior to Starting Excavation

Prior to starting any Excavation, the Contractor shall submit to the Owner:

1. A certificate indicating that the Contractor's Competent Person(s) has completed training in an excavation safety program based on OSHA regulations within the past 5 years.
2. Manufacturer's tabulated data or other tabulated data for Excavation Safety Systems consisting of pre-engineered protective systems such as trench shields, aluminum hydraulic shoring, timber shoring, pneumatic shoring, or trench jacks, or benching or sloping or other protective systems that are not designed specifically for the Project.

   Manufacturer's tabulated data shall meet the requirements in OSHA and shall describe the specific equipment to be used on the Project. Tabulated data must bear the seal of the licensed professional engineer who approved the data. Manufacturer's tabulated data shall be an attachment to the Contractor's Excavation Safety System Plan described below.

509S.4 Excavation Safety System Plan

The Contractor shall prepare an Excavation Safety System Plan (hereafter called the "Plan") specifically for the Project. The Contractor shall retain a Texas-licensed Professional Engineer to prepare the Plan. On City-funded projects, the Contractor must follow qualifications-based procedures to procure the required Professional Engineering services, according to Chapter 2254 of the Texas Government Code.

The Contractor shall be responsible for obtaining geotechnical information necessary for design of the Excavation Safety System. If geotechnical information for design of the Project has been acquired by the Owner or designated representative, it shall be provided to the Contractor for information purposes subject to the provisions of City of Austin Standard Contract Section 00220, "Geotechnical Data."

A. The Plan for Excavation Safety Systems consisting of pre-engineered protective systems such as trench shields, aluminum hydraulic shoring, timber shoring, pneumatic shoring, or trench jacks, or benching or sloping or other protective systems that are not designed specifically for the Project shall include:

   1. Detailed Drawings of the Excavation Safety System(s) that will provide worker protection conforming to OSHA. The Drawings shall note the required load carrying capacity, dimensions, materials, and other physical properties or characteristics in sufficient detail to describe thoroughly and completely the Excavation Safety System(s).
   2. Drawings, notes, or tables clearly detailing the specific areas of the Project in which each Excavation Safety System shall be used, the permissible size of the excavation, the length of time that the excavation shall remain open, the means of egress from the excavation, the location of material storage sites in relation to the excavation, the methods for placing/compacting bedding/backfill within the safety of the system, any excavation safety equipment restrictions and subsequent removal of the system.
   3. Recommendations and limitations for using the Excavation Safety Systems.
   4. A Certificate of Insurance of the Excavation Safety System Engineer's Professional Liability Insurance coverage. For City-funded projects, coverage meeting the requirements of Standard Contact Documents Section 00810 shall be provided. For privately funded projects the coverage shall be at least $1,000,000.

B. The Plan for Excavation Safety Systems consisting of tieback or braced sheeting, tieback or braced soldier piles and lagging, slurry walls, soil nailing, rock bolting or other protective systems that are designed specifically for the Project shall include:

1. Detailed Drawings of the Excavation Safety System(s) that will provide worker protection conforming to OSHA. The Drawings shall note the design assumptions, design criteria, factors of safety, applicable codes, dimensions, components, types of materials, and other physical properties or characteristics in sufficient detail to describe thoroughly and completely the Excavation Safety System(s).
2. Detailed technical specifications for the Excavation Safety System addressing the properties of the materials, construction means and methods, quality control and quality assurance testing, performance monitoring, and monitoring of adjacent features, as appropriate.
3. Drawings that clearly detail the specific areas of the Project in which each type of system shall be used and showing the plan and elevation (vertical profile) views.
4. Drawings, notes or tables clearly detailing the length of time that the excavation shall remain open, the means of egress from the excavation, the location of material storage sites in relation to the excavation, the methods for placing/compacting bedding/backfill within the safety of the system, any excavation safety equipment restrictions and subsequent removal or abandonment of the system or parts thereof.
5. Recommendations and limitations for using the Excavation Safety Systems.
6. A Certificate of Insurance of the Excavation Safety System Engineer's Professional Liability Insurance coverage. For City-funded projects, coverage meeting the requirements of Standard Contract Documents Section 00810 shall be provided. For privately funded projects the coverage shall be at least $1,000,000.

509S.5 Excavation Safety System Submittal Review

Review of the Excavation Safety System submittal conducted by the Owner or designated representative shall only relate to conformance with the requirements herein. The Owner's failure to note exceptions to the submittal shall not relieve the Contractor of any or all responsibility or liability for the adequacy of the Excavation Safety System. The Contractor shall remain solely and completely responsible for all Excavation Safety Systems and for the associated means, methods, procedures, and materials.

509S.6 Contractor’s Responsibility

The Contractor shall be responsible for implementing the Excavation Safety System Plan and for confirming that the Excavation Safety System(s) used on the Project meets the requirements of the Plan.

The Contractor’s Competent Person(s) shall be on the Project whenever workers are in an excavation meeting the definitions of a Trench given in 509S.2.

509S.7 Construction Methods

The Contractor's Competent Person(s) shall maintain a copy of appropriate OSHA regulations onsite and shall implement OSHA excavation safety regulations at the work site. The Contractor shall perform all excavation in a safe manner and shall maintain the Excavation Safety Systems to prevent death or injury to personnel or damage to structures, utilities or property in or near excavation.

If evidence of possible cave-ins or earthen slides is apparent or an installed Excavation Safety System is damaged, the Contractor shall immediately cease work in the excavation, evacuate

personnel from any potentially hazardous areas and notify the Owner. Personnel shall not be allowed to re-enter the excavation until necessary repairs or replacements are completed and are inspected and approved by the Contractor's Competent Person(s). Repair and replacement of damaged Excavation Safety System shall be at the Contractor's sole expense.

509S.8 Changed Conditions

When changed conditions require modifications to the Excavation Safety System, the Contractor shall provide to the Owner or designated representative a new design or an alternate Excavation Safety System Plan that is proposed by the Contractor's Excavation Safety System Engineer to address the changed conditions. Copies of the new design or alternate system shall be provided to the Owner or designated representative in accordance with the requirements of section 509S.3, "Excavation Safety System Plan Submittals". A copy of the most current Excavation Safety System Plan shall be maintained on site and made available to inspection and enforcement officials at all times.

Any changes to the Excavation Safety System Plan that are initiated by the Contractor for operational efficiency or as a result of changed conditions, that could be reasonably anticipated, will not be cause for contract time extension or cost adjustment. When changes to the Excavation Safety System Plan are necessitated by severe and uncharacteristic natural conditions or other conditions not reasonably within the control of the Contractor, the Contractor may make a written request to the Owner for a Change Order to address the anticipated work. The Contractor shall notify the Owner in writing within 24 hours of the occurrence of changed conditions that the Contractor anticipates the submittal of a claim for additional compensation. Under 'Changed Conditions" the work deemed immediately necessary by the Contractor to protect the safety of workers and public, equipment or materials may only be accomplished until the Owner or designated representative has a reasonable opportunity to investigate the Contractor's written request for a Change Order and respond in writing to the request.

509S.9 Measurement

Trench Excavation Safety Protective Systems will only be measured and paid for those trenches that workers would reasonably be expected to enter.

Trench Excavation Safety Protective Systems for Trenches excavated to a final width (measured at the bottom of the excavation) not exceeding 15 feet (4.56 m) shall be measured by the linear foot (meter: 1 meter equals 3.281 feet) through manholes, bore pits, receiving pits, and other appurtenances along the centerline of the trench. This method of measurement shall apply to any and all protective systems, including but not limited to tieback or braced sheeting, tieback or braced soldier piles and lagging, slurry walls, soil nails, rock bolts, shoring, trench boxes, and sloping or benching as used to provide a Trench Excavation Safety Protective System in accordance with the Excavation Safety System Plan.

Trench Excavation Safety Protective Systems for Trenches created by installation or construction of forms or other structures in an excavation whose width is greater than 15 feet (4.56 m) such that the dimension measured from the forms or structures to the sides of the excavation is reduced to 15 feet (4.56 m) or less (measured at the bottom of the excavation) shall be measured by the linear foot along the centerline of the Trench. Where forms or structures create multiple Trenches in one excavation, each Trench shall be measured separately. This method of measurement shall apply to any and all protective systems, including but not limited to tieback or braced sheeting, tieback or braced soldier piles and lagging, slurry walls, soil nails, rock bolts, shoring, trench boxes, and sloping or benching as used to provide a Trench Excavation Safety Protective System in accordance with the Excavation Safety System Plan.

509S.10 Payment

Payment for Trench Excavation Safety Protective Systems, measured as prescribed above, will be made at unit bid price per centerline linear foot of Trench. The unit bid price shall include full compensation for designing, furnishing, installing the system; for dewatering, and for maintaining, replacing, repairing and removing the Trench Excavation Safety Protective System and for sloping, special clearing, and excavation necessary to safely implement the Excavation Safety System Plan. No payment will be made for Trench Excavation Safety Protective Systems made necessary by the Contractor's selection of an optional design or sequence of work that creates the need for the Trench Excavation Safety Protective System.

Payment will be made under the following:

Pay Item No. 509S-1: Trench Excavation Safety Protective Systems, (all depths) Per Linear Foot.

END

SPECIFIC Cross Reference Materials
Standard Specification Item No. 509S, "Excavation Safety Systems"

City of Austin Standard Contract Documents

Designation	Description
Section 00020	Invitation for Bids
Section 00220	Geotechnical Data
Section 00650	Certificate of Insurance
Section 00700, Article 6.11	Safety and Protection
Section 810	Supplemental General Conditions

29 CFR, Occupational Safety and Health Administration, Part 1926 Safety and Health Regulations for Construction, Subpart P, Excavation
Texas Health and Safety Code Title 9 Chapter 756 Subchapter C
Texas Government Code Chapter 2254

RELATED Cross Reference Materials
Standard Specification Item No. 509S, "Excavation Safety Systems"

Texas Department of Transportation Standard Specifications
For Construction and Maintenance of Highways, Streets, and Bridges

Designation	Description
Item 104	Removing Concrete
Item 110	Excavation
Item 402	Trench Excavation Protection

City of Austin Standard Specification Items

Designation	Description
Item No. 101S	Preparing Right of Way
Item No. 102S	Clearing and Grubbing
Item No. 110S	Street Excavation
Item No. 111S	Excavation
Item No. 130S	Borrow

Item No. 132S	Embankment
Item No. 201S	Subgrade Preparation
Item No. 402S	Controlled Low Strength Material
Item No. 501S	Jacking or Boring Pipe
Item No. 503S	Frames, Grates, Rings and Covers
Item No. 504S	Adjusting Structures
Item No. 505S	Concrete Encasement and Encasement Pipe
Item No. 506	Manholes
Item No. 507S	Bulkheads
Item No. 510	Pipe
Item No. 511S	Water Valves
Item No. 593S	Concrete Retards
Item No. 594S	Gabions and Revet Mattresses

Item No. 510
Pipe

510.1 Description

This item governs the furnishing and installing of all pipe and/or materials for constructing pipe mains, sewers, laterals, stubs, inlet leads, service connections, culverts, temporary service lines and temporary diversion lines, including all applicable Work such as excavating, bedding, jointing, backfilling materials, tests, concrete trench cap, concrete cap and encasement, etc., prescribed under this item in accordance with the provisions of the Edwards Aquifer Protection Ordinance, when applicable, and City of Austin Utility Criteria Manual, Section 5, "Working in Public Rights-of-Way". The pipe shall be of the sizes, types, class and dimensions indicated or as designated by the E/A and shall include all joints or connections to new or existing mains, pipes, sewers, manholes, inlets, structures, etc., as may be required to complete the Work in accordance with specifications and published standard practices of the trade associations for the material specified and to the lines and grades indicated. This item shall include any pumping, bailing, and drainage when indicated or applicable. Unless otherwise provided, this item shall consist of the removal and disposition of trees, stumps and other obstructions, old structures or portions thereof such as house foundations, old sewers, masonry or concrete walls, the plugging of the ends of abandoned piped utilities cut and left in place and the restoration of existing utilities damaged in the process of excavation, cutting and restoration of pavement and base courses, the furnishing and placing of select bedding, backfilling and cement or lime stabilized backfill, the hauling and disposition of surplus materials, bridging of trenches and other provisions for maintenance of traffic or access as indicated.

510.2 Materials

The Contractor shall submit descriptive information and evidence that the materials and equipment the Contractor proposes for incorporation into the Work are of the kind and quality that satisfies the specified functions and quality. Austin Water Utility Standard Products Lists (SPL) form a part of the Specifications. Contractors may, when appropriate, elect to use products from the SPL; however, submittal to the E/A is still required. Should the Contractor elect to use any materials from these lists, each product shall be completely and clearly identified by its corresponding SPL number when making the product submittal. This will expedite the review process in which the E/A, and, if necessary, the Austin Water Utility Standard Products Committee, decides whether the products meet the Contract requirements and the specific use foreseen by the E/A in the design of this engineered Project. The purpose of the SPL's is to expedite review, by the E/A and, if necessary, the Austin Water Utility Standard Products Committee, of Contractor product submittals. The SPL's shall not be considered as being a pre-approved list of products necessarily meeting the requirements of the Project. Items contained in the SPL cannot be substituted for items shown on the Drawings, or called for in the specifications, or specified in the Bidding Requirements, Contract Forms and Conditions of Contract, unless approved by the E/A in conjunction with the Austin Water Utility Standard Products Committee. The Standard Product List current at the time of plan approval will govern.

(1) Concrete

Concrete shall conform to Item No. 403S, "Concrete for Structures".

(2) Coarse Aggregate

Coarse aggregate shall conform to Item No. 403S, "Concrete for Structures" or one of the following:

(a) Pipe Bedding Stone

Pipe bedding stone shall be clean gravel, crushed gravel or crushed limestone, free of mud, clay, vegetation or other debris, conforming to ASTM C 33 for stone quality. Size gradation shall conform to ASTM C-33 No. 57 or No. 67 or the following Table:

SIEVE SIZE	% RETAINED BY WEIGHT
1-1/2"	0
1"	0-10
1/2"	40-85
#4	90-100
#8	95-100

(b) Foundation Rock

Foundation rock shall be well graded coarse aggregate ranging in size from 2 to 8 inches.

(c) Flexible Base

Flexible base shall conform to Item No. 210S, "Flexible Base".

(3) Fine Aggregate

(a) Concrete and Mortar Sand

Fine aggregate shall conform to Item No. 403S, "Concrete for Structures".

(b) Bedding Sand

Sand for use as pipe bedding shall be clean, granular and homogeneous material composed mainly of mineral matter, free of mud, silt, clay lumps or clods, vegetation or debris. The material removed by decantation TxDOT Test Method Tex-406-A, plus the weight of any clay lumps, shall not exceed 4.5 percent by weight.

The resistivity shall not be less than 3000 ohms-cm as determined by TxDOT Test Method Tex-129-E. Size gradation of sand for bedding shall be as follows:

GRADATION TABLE	
SIEVE SIZE	% RETAINED BY WEIGHT
1/4"	0
#60	75-100
#100	95-100

(c) Stone Screenings

Stone screenings shall be free of mud, clay, vegetation or other debris, and shall conform to the following Table:

SIEVE SIZE	% PASSING
3/8"	100
No. 4	95 to 100
No. 8	80 to 100
No. 16	50 to 85
No. 30	25 to 60
No. 50	10 to 30
No. 100	2 to 10

All screenings shall be the result of a rock crushing operation.

(4) Controlled Low Strength Material

Controlled Low Strength Material (CLSM) shall conform to Item 402S, "Controlled Low Strength Material.

(5) Pea Gravel

Pea gravel bedding shall be clean washed material, hard and insoluble in water, free of mud, clay, silt, vegetation or other debris. Stone quality shall meet ASTM C 33. Size gradation shall be as follows:

SIEVE SIZE	% RETAINED BY WEIGHT
3/4"	0
1/2"	0-25
1/4"	90-100

(6) Select Backfill or Borrow

This material shall consist of borrow or suitable material excavated from the trench. It shall be free of stones or rocks over 8 inches and shall have a plasticity index of less than 20. The moisture content at the time of compaction shall be within 2 percent of optimum as determined by TxDOT Test Method Tex-114-E. Sandy loam borrow will not be allowed unless shown on the Drawings or authorized by the E/A.

All suitable materials from excavation operations not required for backfilling the trench may be placed in embankments, if applicable. All unsuitable materials that cannot be made suitable shall be considered surplus excavated materials as described in 510.3(13). The Contractor may, if approved by the engineer, modify unsuitable materials to make them suitable for use. Modification may include drying, removal or crushing of over-size material, and lime or cement treatment.

(7) Cement Stabilized Backfill

When indicated or directed by the E/A, all backfill shall be with cement-stabilized backfill rather than the usual materials. Unless otherwise indicated, cement stabilized backfill material shall consist of a mixture of the dry constituents described for Class J Concrete. The cement and aggregates shall be thoroughly dry mixed with no water added to the mixture except as may be directed by the E/A.

(8) Pipe

General

Fire line leads and fire hydrant leads shall be ductile iron. Domestic water services shall not be supplied from fire service leads, unless the domestic and fire connections are on separately valved branches with an approved backflow prevention device in the fire service branch. All wastewater force mains shall be constructed of ductile iron pipe Pressure Class 250 minimum for pipe greater than 12-inch size and Pressure Class 350 for pipe 12-inch size and smaller. Wastewater pipe shall be in accordance with Austin Water Utility's Standard Products List SPL WW-534 and shall have a corrosion resistant interior lining acceptable to the Owner.

All water pipe within utility easements on private property shall be Ductile Iron Pipe, Pressure Class 350 minimum for pipe 12-inch size and smaller and Pressure Class 250 minimum for pipe greater than 12-inch size wrapped as indicated. For sizes over 24 inches, Concrete Pressure Pipe, steel cylinder type, conforming to the requirements of AWWA C-301 will be acceptable.

There may be no service connections to Concrete Pressure Pipe installed in utility easements on private property. Approved service clamps or saddles shall be used when tapping ductile iron pipe 12 inch size and smaller. All service tubing (3/4 inch thru 2 inches) installed in utility easements on private property shall be 150 psi annealed seamless Type K copper tubing with no sweat or soldered joints.

All reclaimed water mains shall be constructed of ductile iron pipe, Pressure Class 350 minimum for pipe 12-inch size and smaller and Pressure Class 250 for pipe

greater than 12-inch size. For mains 12-inch size and smaller, PVC pipe, conforming to the requirements of AWWA C-900, DR 14 shall be acceptable. Reclaimed water pipe shall be manufactured purple, painted purple, or wrapped in purple polyethylene film wrap.

Manufacturers of concrete pipe and pipe larger than 24-inch diameter shall have a quality control program consisting of one or more of the following:

1) a quality management system certified by the American National Standards Institute (ANSI) or National Sanitation Foundation (NSF) to comply with ISO 9001:2000,

2) a quality management system certified by the QCast Program following the requirements of the ACPA Plant Certification Manual,

3) a quality management system certified by the National Precast Concrete Association

4) a quality control program approved by the OWNER prior to submittal of bids for the PROJECT, or

5) an independent, third party quality control testing and inspection firm for testing and inspecting pipe produced for the PROJECT and approved by the OWNER prior to submittal of bids for the PROJECT.

All such quality control programs shall be paid for by the manufacturer. It is the intent of this requirement that the manufacturer will document all appropriate tests and inspections with sampling and inspection criteria, frequency of testing and inspection, date of testing and inspection and date on which every piece was manufactured. Required testing and inspection, including that by an independent, third party, shall be performed full-time during production of pipe for the PROJECT. When requested by the OWNER, the manufacturer will provide copies of test data and results and inspection reports with the shipment of pipe for the PROJECT. Test data and results and inspection reports shall be traceable to specific pipe lots or pieces. Owner approval of the manufacturer's quality control program will expire after three years, at which time the manufacturer must present a current quality control program for approval in order to retain listing on the applicable SPL. Owner approval of the Concrete Pipe manufacturer's quality control program will expire after three years, at which time the manufacturer must present a current quality control program for approval.

The quality of materials, the process of manufacture and the finished pipe shall be subject to inspection and approval by the E/A at the pipe manufacturing plant and at the project site prior to and during installation. Plant inspections shall be conducted at the discretion of the City Representative. Only manufacturers having a quality control program of the type described above will be considered as approved providers of concrete pipe and pipe products as listed in the Standard Products List (SPL).

All water distribution pipe and fittings shall be listed in the Fire Protection Equipment Directory published by the Underwriter's Laboratories, Inc., or shall be Factory Mutual approved for fire service. All water pipe and related products shall be registered by the National Sanitation Foundation as having been certified to meet NSF/ANSI Standard 61.

(a) Reserved

(b) Iron Pipe

Iron pipe shall be ductile iron pipe meeting all requirements of standards as follows:

-For push-on and mechanical joint pipe: AWWA C-151

-For flanged pipe: AWWA C-115

Barrels shall have a nominal thickness required by Table 1 of AWWA C-115, which thickness corresponds to Special Class 53 in sizes through 54 inch, and Class 350 in 60 and 64-inch sizes. Flanges shall be ductile iron (gray iron is not acceptable); they shall be as shown in ANSI/AWWA C115/A21.15 and shall conform to dimensions shown in Table 2 and Figure 1 of AWWA C115. These flanges are the same in all respects as flanges shown in ANSI/AWWA C110/A21.10 for fittings and are standard for all flanges used with pipe, valve, and equipment units in the City of Austin water distribution and wastewater force main systems. Flanges shall be fabricated and attached to the pipe barrels by U.S. fabricators using flanges and pipe barrels of U.S. manufacture. If fabrication is to be by other than the pipe barrel manufacturer, a complete product submittal and approval by the Austin Water Utility will be required. Additionally, such fabricator shall furnish certification that each fabricated joint has been satisfactorily tested hydrostatically at a minimum pressure of 300 psi.

-Linings and Coating:

Interior surfaces of all iron potable or reclaimed water pipe shall be cement-mortar lined and seal coated as required by AWWA C104. Interior surfaces of all iron wastewater line and force main pipe shall be coated with a non-corrosive lining material as indicated on Austin Water Utility's Standard Products List SPL WW-534. Pipe exteriors shall be coated as required by the applicable pipe specification. The type and brand of interior lining shall be clearly marked on the outside of the pipe and fittings. Except as authorized by the E/A, only one type and brand of pipe lining shall be used on a given project.

Except as described above for flanged pipe (Thickness Class 53) and where not otherwise indicated, ductile iron pipe shall be minimum Class 250 as defined by ANSI/AWWA C150/A21.50-current; all ductile iron pipe and flanges shall meet the following minimum physical requirements:

Grade 60-42-10:

-Minimum tensile strength: 60,000 psi (414 mPa).

-Minimum yield strength: 42,000 psi (290 mPa).

-Minimum elongation: 10 percent.

The flanges for AWWA C115 pipe may be also be made from:

Grade 70-50-05:

-Minimum tensile strength: 70,000 psi (483 map).

-Minimum yield strength: 50,000 psi (345 mPa).

-Minimum elongation: 5 percent.

1. Ductile Iron Fittings:

   Fittings shall be push-on, flanged or mechanical joint as indicated or approved and shall meet all requirements of standards as follows:

   -Sizes 4 inch through 24 inch: AWWA C-110 or AWWA C-153

   -Sizes larger than 24 inch: AWWA C-110.

   -Lining and Coating:

   Interior surfaces or all iron potable/reclaimed water pipe fittings shall be lined with cement- mortar and seal coated as required by AWWA C104. Interior surfaces of all iron wastewater and force main fittings shall be coated with a non-corrosive lining material acceptable to Owner. Fitting exteriors shall be coated as required by the applicable pipe specification.

2. Joint Materials

   Gaskets for mechanical joints shall conform to ANSI/AWWA A21.11/C-111.

   Joining of slip joint iron pipe shall, without exception, be accomplished with the natural or synthetic rubber gaskets of the manufacturer of that particular pipe being used. A joint lubricant shall be used and applicable recommendations of the manufacturer shall be followed.

   Gaskets for flanged joints shall be continuous full face gaskets, of 1/8 inch minimum thickness of natural or synthetic rubber, cloth-reinforced rubber or neoprene material, preferably of deformed cross section design and shall meet all applicable requirements of ANSI/AWWA

A21.11/C-111 for gaskets. They shall be manufactured by, or satisfy all recommendations of, the manufacturer of the pipe/fittings being used and be fabricated for use with Class 125 ANSI B16.1 flanges.

Tee-head bolts, nuts and washers for mechanical joints shall be high strength, low alloy, corrosion resistant steel stock equal to "COR-TEN A" having UNC Class 2 rolled threads or alloyed ductile iron conforming to ASTM A 536; either shall be fabricated in accordance with ANSI/AWWA A21.11/C-111.

Hex head bolts and nuts shall satisfy the chemical and mechanical requirements of ASTM A449 SAE Grade 5 plain, and shall be fabricated in accordance with ASTM B 18.2 with UNC Class 2 rolled threads.

Either Tee-Head or Hex-Head bolts, nuts and washers as required, shall be protected with bonded fluoro-polymer corrosion resistant coating where specifically required by the E/A.

All threaded fasteners shall be marked with a readily visible symbol cast, forged or stamped on each nut and bolt, which will identify the fastener material and grade. The producer and the supplier shall provide adequate literature to facilitate such identification; painted markings are not acceptable.

3. Polyethylene Film Wrap

All iron pipe, fittings and accessories shall be wrapped with standard 8 mil (minimum) low density polyethylene film or 4-mil (minimum) cross laminated high-density polyethylene conforming to AWWA C-105, with all edges overlapped and taped securely with duct tape to provide a continuous wrap to prevent contact between the piping and the surrounding backfill. Repair all punctures of the polyethylene, including those caused in the placement of bedding aggregates, with duct tape to restore the continuous protective wrap before backfilling. Polyethylene film wrap for reclaimed water pipe shall be purple.

4. Marking

Each pipe joint and fitting shall be marked as required by the applicable AWWA specification. This includes in all cases: Manufacturer's identification, Country where cast, year of casting, and "DUCTILE" or "DI". Barrels of flanged pipe shall show thickness class; others shall show pressure class. The flanges of pipe sections shall be stamped with the fabricators identification; fittings shall show pressure rating, the nominal diameter of openings and the number of degrees for bends. Painted markings are not acceptable.

5 Warning Tape

Warning tape for identifying restrained joint pipe and fittings shall be yellow and shall have black lettering at least 2 inches high that reads "Restrained Joint / Junta de Restriccion" at intervals not exceeding 24 inches. The warning tape shall be polypropylene having a minimum thickness of 2 mils, a minimum width of 3 inches, and adhesive backing on the side opposite the lettering.

(c) Concrete

1. General

Pipe shall conform to ASTM C 76 for Circular Pipe. Concrete pipe smaller than 12 inches in diameter shall conform to ASTM C 14, Extra Strength. All pipe shall be machine made or cast by a process which will provide uniform placement of the concrete in the form and compaction by mechanical devices, which will assure a dense concrete. Concrete shall be mixed in a central batch plant or other approved batching facility from which the quality and uniformity of the concrete can be assured. Transit mixed concrete shall not be acceptable for use in precast pipe. The pipe shall be Class III or the class indicated. Storm sewer pipe shall be of the tongue and groove or 0-ring joint design. Wastewater pipe shall be of the 0-ring joint design; it shall be acceptably lined for corrosion protection.

2. Marking

Each joint of pipe shall be marked with the pipe class, the date of manufacture, the manufacturer's name or trade mark, diameter of pipe and orientation, if required.

Pipe marking shall be waterproof and conform to ASTM C 76.

3. Minimum Age for Shipment

Pipe shall be considered ready for shipment when it conforms to the tests specified in ASTM C 76.

4. Joint Materials

When installing storm sewers (or storm drains), the Contractor shall have the option of using joints with preformed flexible joint sealants or with rubber gaskets. Preformed flexible joint sealants for storm drain joints shall comply with ASTM C990, and rubber gaskets for storm drain joints shall comply with ASTM C 1619**.** Mortar shall not be used to seal pre-fabricated joints. Pipe manufacturer shall be responsible for submitting to the Owner a detailed design of the joint upon request. The pipe manufacturer shall be responsible for submitting to the Owner a complete list of joint sizes showing the minimum size of material to be used with each size joint, along with complete instructions on recommended installation procedures. Quality control testing at the

manufacturing plant shall be in accordance with Texas Department of Transportation (TxDOT) Departmental Materials Specifications (DMS) 7310, “Reinforced Concrete Pipe And Machine-Made Precast Concrete Box Culvert Fabrication And Plant Qualification”. The pipe manufacturer shall be verified as compliant with TxDOT DMS 7310 at time of pipe delivery to the jobsite.

a. Mortar

Mortar for joints shall meet the requirements set forth below in "Mortar".

b. Cold Applied Preformed Plastic Gaskets

Cold Applied Plastic Gaskets shall be suitable for sealing joints of tongue and groove concrete pipe. The gasket sealing the joint shall be produced from blends of refined hydrocarbon resins and plasticizing compounds reinforced with inert mineral filler and shall contain no solvents, irritating fumes or obnoxious odors. The gasket joint sealer shall not depend on oxidizing, evaporating or chemical action for its adhesive or cohesive strength and shall be supplied in extruded rope form of suitable cross section. The size of the plastic gasket joint sealer shall be in accordance with the manufacturer's recommendations and sufficient to obtain squeeze-out around the joint. The gasket joint sealer shall be protected by a suitable removable wrapper that may be removed longitudinally without disturbing the joint sealer to facilitate application.

The chemical composition of the gasket joint sealing compound as shipped shall meet the following requirements:

Composition (% by weight)	Test Method	Typical Analysis
Bitumen (petroleum plastic content)	ASTM D 4	50-70
Ash-inert Mineral Water	Tex-526-C	30-50
Volatile Matter (at 325 F)	Tex-506-C	2.0 Maximum

The gasket joint sealing compound when immersed for 30 days at ambient room temperature separately in 5 percent solution of caustic potash, a mixture of 5 percent hydrochloric acid, a 5 percent solution of sulfuric acid and a saturated H2S solution shall show no visible deterioration.

The physical properties of the gasket joint sealing compound as shipped shall meet the following requirements:

Property	Test Method	Typical Analysis	
		Minimum	Maximum
Specific Gravity at 77 F	ASTM D 71	1.20	1.35
Ductility at 77F (cm) Minimum	Tex-503-C	5.0	
Softening point	Tex-505-C	275 F	
Penetration:			
32 F (300 g) 60 sec	Tex-502-C	75	
77 F (150 g) 5 sec	Tex-502-C	50	120
115 F (150 g) 5 sec	Tex-502-C		150
Flashpoint C.O.C. F	Tex-504-C	600 F	
Fire Point C.O.C. F	Tex-504-C	625 F	

When constructing wastewater lines, the Contractor shall use 0-ring gasket joints conforming to ASTM C 443. Just before making a joint, the ends of the pipe shall be clean, dry, free of blisters or foreign matter and shall be wire brushed. For O-ring joints, the gasket and the inside surface of the bell shall be lubricated with a light film of soft vegetable soap compound to facilitate assembly of the joint. The rubber O-ring gasket shall be stretched uniformly in the joint. Wedge seal type ("Forsheda" pre-lubricated) gaskets may be used if joint details submitted are approved; installation of such gaskets shall be in strict accordance with the manufacturer's recommendations, and shall be the sole element depended upon to make the joint flexible and watertight.

In wastewater lines no horizontal or vertical angles in the alignment of pipes shall be permitted unless indicated. The spigot shall be centered in the bell, the pipe pushed uniformly home and brought into true alignment. Bedding material shall be placed and tamped against pipe to secure the joint.

5. Bends

When horizontal or vertical angles in the alignment of storm sewers are indicated, the bend or angle shall be constructed by cutting on a bias one or both pipes as may be required for the alignment indicated. The pipe cut shall be sufficiently long to allow exposing the reinforcement, which shall be bent, welded and incorporated into the pipe bend and reinforced concrete collar to maintain the structural integrity. The collar shall be 6 inches minimum, reinforced with #4 bars on a 1 foot center both directions. Builder's hardware cloth may be used on the outside of the joint to aid in holding cementing materials in place. Plywood, fiberboard or other materials placed on the inside of the pipe as formwork shall be removed as soon as the joint materials have obtained initial set, after which the inside surface of the pipe joint shall be finished smooth and true to the line and grade established. The Contractor may

use prefabricated bends meeting the specification requirements in lieu of field fabricated bends. All bends shall be watertight, have a smooth flow line and be equal or greater in strength to the adjacent pipe.

Horizontal or vertical changes in alignment in wastewater lines shall be accomplished by use of manholes. With the E/A's approval, horizontal changes in alignment may be made by the "Joint Deflection" method. Joint deflection is limited by regulations of the Texas Commission on Environmental Quality (TCEQ) to 80 percent of the maximum recommended by the manufacturer; such deflection may not exceed 5 degrees at any joint. Changes in alignment using pipe flexure shall not be allowed.

6. Sulfide and Corrosion Control

All concrete pipe used for wastewater installations shall be protected from sulfide and corrosion damage by using limestone aggregate.

(d) Concrete Steel Cylinder (CSC) Pipe

1. General Requirements

The Contractor shall submit to the E/A for approval along with other required data a tabulated layout schedule with reference to the stationing and grade lines to be used.

The manufacturer shall furnish all fittings and special pieces required for closures, bends, branches, manholes, air valves, blow offs and connections to main line valves and other fittings as indicated.

Each pipe length, fitting and special joint shall have plainly marked on the bell end of the pipe, the head condition for which it is designed. In addition, marking shall be required to indicate the location of each pipe length or special joint in the line and such markings will be referenced to the layout schedules and drawings and submitted for approval.

Concrete steel cylinder fittings shall be tested as required by the applicable AWWA Standards.

2. Design and Inspection

Where not otherwise indicated, concrete steel cylinder pipe shall be Class 150, designed to withstand a vacuum of not less than 28 feet of water. Valve reducers, tees and outlets from a pipe run shall be designed and fabricated so that all stresses are carried by the steel forming the fitting or outlet.

Concrete steel cylinder pipe shall meet one of the following specifications:

AWWA C-301 - Any Size

AWWA C-303 - 24-inch maximum size

All pipe flanges shall conform to AWWA C-207, requirements for standard steel flanges of pressure classes corresponding to the pipe class.

Pipe to be installed in a tunnel or encasement shall be manufactured with 1 inch thick by 24-inch wide skid bands of mechanically impacted mortar in addition to the normal coating.

All concrete steel cylinder fittings shall be constructed of steel plate of adequate strength to withstand both internal pressure and external loading. Rod reinforcing shall not be used to figure the required steel area. The fittings shall have a concrete lining and 1 inch minimum coating of cement mortar, except that centrifugally spun lining need not be reinforced.

Minimum lining thickness shall be 1/2 inch for 16-inch pipe and 3/4 inch for sizes larger than 16-inch pipe. Where it is impractical to place such concrete protection on interior surfaces of small outlets, 2 coats of "Bitumastic Tank Solution" shall be applied.

No fitting shall be made by cutting of standard pipe, except that outlets of less than 75 percent of the pipe diameter may be placed in a standard pipe. Beveled spigots may be placed on standard pipe.

3. Joint Materials

Joints shall be of the rubber gasket type conforming to the applicable standards. The inside and outside recesses between the bell and spigot shall be completely filled with Cement Grout in accordance with the pipe manufacturer's recommendations. Grout materials for jointing such pipe, unless otherwise indicated, shall be as described herein.

(e) Reserved

(f) Polyethylene Tubing

1. General

All polyethylene (PE) tubing shall be high density, high molecular weight plastic tubing meeting ASTM D 2737; it shall be pressure rated at 200 psi working pressure and must bear the National Sanitation Foundation seal of approval for potable water service. Pipe manufacturers shall be listed on SPL WW-65.

2. Materials

Polyethylene plastics shall be Designation PE3408 (Grade P34 with hydrostatic design stress of 800 psi).

3. Markings

Permanent marking on the tubing shall include the following at intervals of not more than 5 feet:

Nominal tubing size.

Type of plastic material, i.e., PE 3408.

Dimension Ratio (DR) and pressure rating in psi for water at 73.4 F (e.g., SDR-9, 200 psi).

ASTM D 2737 designation.

Manufacturer's name or trademark, code and seal of approval (NSF mark) of the National Sanitation Foundation.

Polyethylene tubing for reclaimed service lines shall be purple.

4. Tube Size

PE tubing shall be standard copper tube size outside diameter, with Standard Dimension Ratio (SDR) of 9.

(g) Copper Tubing

All copper service tubing shall be annealed seamless Type K water tube meeting ASTM B88 and rated at 150 psi working pressure. The tubing shall be homogenous throughout and free from cracks, holes, crimping, foreign inclusions or other defects. It shall be uniform in density and other physical properties. Copper tubing for reclaimed water shall be wrapped in purple polyethylene film wrap. Pipe manufacturers shall be listed on SPL WW-613.

(h) Service Connection Fittings

All fittings used in customer service connection - tapping mains, connecting meters, etc. - must be currently listed on the applicable Water and Wastewater Standard Products List (SPL WW-68), or called for in the City of Austin Standard Details (520 - series).

(i) Brass Goods

All brass valves, couplings, bends, connections, nipples and miscellaneous brass pipe fittings and accessories used in meter connections, service lines, air release piping assemblies, and wherever needed in the water distribution system, shall conform to the City of Austin Standards, Austin Water Utility Standard Products Lists, and AWWA C-800, except as herein modified or supplemented.

Unless otherwise noted, the goods described herein shall be fabricated of standard Red Brass (Waterworks Brass) meeting ASTM B62 or B584, alloy

83600, consisting of 85 percent copper and 5 percent each of tin, lead and zinc.

Exposed threads shall be covered with plastic caps or sheeting to protect the threads.

Brass goods of each type and class shall be compatible with other fittings in common usage for similar purposes. Where not otherwise indicated, all such materials shall meet the following requirements:

Inlet threads of corporation valves shall be AWWA iron pipe (IP) thread (male); outlets of service saddles shall be tapped with AWWA IP thread (female). AWWA IP threads shall conform to ANSI/ASME B1.20.1 as required by AWWA C800 for “General Purpose (Inch) Pipe Threads”. For 3/4” and 1” sizes only, corporation valve inlet threads, and the internal threads of saddles may be the AWWA taper thread conforming to AWWA C800 Figure 1 and Table 6. External threads of corporation valve inlet must be compatible with internal threads of the service saddle.

Connections of all new tubing, and of tubing repairs wherever possible, shall be by compression fittings. Compression connections shall be designed to provide a seal and to retain the tubing, without slippage, at a working water pressure of 150 psig.

Flanges shall conform to ANSI B16.1, Class 125, as to dimensions, drillings, etc. Copper tubing, when used, shall be Type K tubing having dimensions and weights given in Table A.1 of AWWA C800.

Brass pipe shall conform to the weights and dimensions for Extra Strong pipe given in Table A.2 of AWWA C800.

All fittings shall be suitable for use at hydrostatic working pressures up to 150 psig (hydrostatic testing of installed systems is at 200 psig).

(j) Reserved

(k) Polyvinyl Chloride Potable/Reclaimed Water Pipe

1. General

All polyvinyl chloride (PVC) potable/reclaimed water pipe shall be of the rigid (UNPLASTICIZED) type and must bear the National Sanitation Foundation seal of approval for potable water pipe. Each joint of pipe shall consist of single continuous extrusion; bells or other components attached by solvent welding are not acceptable. Pipe shall be pressure rated at 200 psi (SDR-14).

Pipe shall have push-on, rubber gasket joints of the bell and spigot type with thickened integral bells with rubber gasket joints. The wall thickness of each pipe bell and joint coupling must be greater than the standard pipe barrel thickness. Clearance must be provided in every

gasket joint for both lateral pipe deflection and for linear expansion and contraction. Concrete thrust blocking shall be placed behind bends and tees. Concrete support cradles or blocking shall be required for support of all fire hydrants, valves and AWWA C110 fittings; such support shall be provided for AWWA C153 fittings when required by the E/A.

2. Applicable Specifications

Except as modified or supplemented herein, PVC pipe shall meet the following standards:

AWWA C-900, SDR 14 for PVC Pressure Pipe, in 4, 6, 8 and 12 inch nominal sizes, having Cast Iron Pipe size outside diameters.

Fittings used with PVC Pressure pipe shall be AWWA C-110 or AWWA C-153 compact ductile iron fittings.

All pipe 4 inches and larger must be approved Underwriter's Laboratories for use in buried water supply and fire protection systems.

3. Material Requirements

All pipe and fittings shall be made from clean, virgin, NSF certified, Class 12454B PVC. Clean reworked materials generated from the manufacturers own production may be used within the current limits of the referenced AWWA C-900.

4. Marking

PVC for reclaimed piping shall be purple or wrapped in purple polyethylene film wrap.

Permanent marking on each joint of pipe shall include the following at intervals of not more than 5 feet:

Nominal pipe size and OD base (e.g., 4 CIPS).

Type of plastic material (e.g., PVC 12454B).

Standard Dimension Ratio and the pressure rating in psi for water at 73 F (e.g., SDR 14, 200 psi).

AWWA designation with which the pipe complies (e.g., AWWA C-900).

Manufacturer's name or code and the National Sanitation Foundation (NSF) mark.

5. Tracer Tape

Inductive Tracer Detection Tape shall be placed directly above the centerline of all non-metallic pipe a minimum of 12 inches below

subgrade or, in areas outside the limits of pavement, a minimum of 18 inches below finished grade. The tracer tape shall be encased in a protective, inert, plastic jacket and color coded according to American Public Works Association Uniform Color Code. Except for minimum depth of cover, the tracer tape shall be placed according to manufacturer's recommendations. Manufacturers must be listed on SPL WW-597.

(l) Polyvinyl Chloride (PVC) Pipe (Nonpressure) and Fittings

1. General

PVC sewer and wastewater pipe and fittings 6 through 15 inch diameter shall conform to ASTM D 3034. Pipe shall have minimum cell classification of 12364 or 12454. Fittings shall have cell classification of 12454 or 13343. Pipe stiffness shall be at least 115 psi as determined by ASTM D 2412. Pipe manufacturers shall be on SPL WW-227, and fitting manufacturers shall be on SPL WW-227B.

PVC sewer and wastewater pipe and fittings 18 through 27 inch diameter shall conform to ASTM F 679. Pipe shall have minimum cell classification of 12364 or 12454. Pipe stiffness shall be at least 72 psi as determined by ASTM D 2412. Pipe manufacturers shall be on SPL WW-227A, and fitting manufacturers shall be on SPL WW-227B.

2. Joints

PVC pipe and fitting shall have elastomeric gasket joints conforming to ASTM D 3212. Gaskets shall conform to ASTM F 477.

3. Pipe Markings

Pipe meeting ASTM D 3034 shall have permanent marking on the pipe that includes the following at intervals of not more than 5 feet:

Manufacturer's name and/or trademark and code.

Nominal pipe size.

PVC cell classification per ASTM D 1784

The legend "SDR-_ _ PVC Sewer Pipe" (SDR 26, 23.5. or less is required)

The designation "ASTM D 3034"

Pipe meeting ASTM F 679 shall have permanent marking that includes the following at intervals of not more than 5 feet:

Manufacturer's name or trademark and code

Nominal pipe size

PVC cell classification per ASTM D 1784

Pipe stiffness designation “PS _ _ PVC Sewer Pipe” (PS of at least 72 is required

The designation “ASTM F 679”

4. Fitting Markings

Fittings meeting ASTM D 3034 shall have permanent marking that includes the following:

Manufacturer's name or trademark,

Nominal size

The material designation "PVC"

The designation, "ASTM D 3034"

Fittings meeting ASTM F 679 shall have permanent marking that includes the following:

Manufacturer’s name or trademark and code

Nominal size

The material designation “PVC”

The designation “ASTM F 679”

5. Tracer Tape

Inductive Tracer Detection Tape shall be placed directly above the centerline of all non-metallic pipe a minimum of 12 inches below subgrade or, in areas outside the limits of pavement, a minimum of 18 inches below finished grade. The tracer tape shall be encased in a protective, inert, plastic jacket and color coded according to American Public Works Association Uniform Color Code. Except for minimum depth of cover, the tracer tape shall be placed according to manufacturer’s recommendations. Manufacturers must be listed on SPL WW-597.

(m) Steel Pipe

1. Standard Weight

ASTM A 53, Schedule 40.

2. Extra Heavy Weight

Seamless ASTM A 53, Schedule 80.

3. Encasement Pipe

a. For direct-bury installations, pipe shall conform to ASTM A134 with minimum thickness of 3/8 inch (9.5 mm).

b. For jacked installations, pipe shall conform to requirements on drawings.

4. Fittings

Nipples and fittings extra strong Federal Specification WW-N 351 or WW-P 521.

5. Coatings

Black or galvanized as indicated.

(n) Welded Steel Pipe and Fittings for Water-Pipe

1. General Reference Standards Specification.

Specifications of the American Water Works Association (AWWA) listed below shall apply to this Section.

C-200 Steel Water Pipe 6 inches and larger.

C-205 Cement-Mortar Protective Lining and Coating for Steel Water Pipe, 4 inches and larger, Shop Applied.

C-206 Field Welding of Steel Water Pipe.

C-207 Steel Pipe Flanges for Waterworks Services, Sizes 4 inches through 144 inches.

C-208 Dimensions for Steel Water Pipe Fittings.

C-602 Cement-Mortar Lining of Water Pipelines, 4 inches and larger in Place.

2. Submittals

Furnish Shop Drawings, product data, design calculations and test reports as described below:

a. Certified copies of mill tests confirming the type of materials used in steel plates, mill pipe flanges and bolts and nuts to show compliance with the requirements of the applicable standards.

b. Complete and dimensional working drawings of all pipe layouts. Shop Drawings shall include the grade of material, size, wall

thickness of the pipe and fittings, type and location of fittings and the type and limits of the lining and coating systems of the pipe and fittings.

c. Product data to show compliance of all couplings, supports, fittings, coatings and related items.

3. Job Conditions

a. The internal design pressure of all steel pipe and fittings shall be as indicated.

b. The interior of all steel pipe for potable water, 4 inches and larger, shall be cement-mortar lined.

4. Manufacturing

a. Description

Pipe shall comply with AWWA C-200.

(1) Circumferential deflection of all pipe in-place shall not exceed 2.0 percent of pipe diameter.

(2) Diameter

Nominal pipe diameter shall be the inside diameter of lining or pipe barrel, unless otherwise designated in Job Conditions.

b. Wall Thickness

(1) Steel pipe wall thickness shall be designed for the internal and external loads specified in this section. The cylinder thickness needed to resist internal pressure shall be based on an allowable stress in the steel equal to 1/2 the minimum yield stress of the material used.

5. Fittings

a. Welded

Fabricated steel fittings shall be of the same material as pipe and shall comply with AWWA C-208.

6. Flanges

a. Flanges shall comply with the requirements of AWWA C-207, Class D or Class E. The class shall be based on operating conditions and mating flanges of valves and equipment.

b. Gaskets shall be cloth-inserted rubber, 1/8 inch thick.

c. Flanges shall be flat faced with a serrated finish.

7. Pipe Joints

a. Lap Joints for Field Welding

(1) Lap joints for field welding shall conform to AWWA C-206. This item applies only to pipes 72 inches in diameter and larger.

(2) The bell ends shall be formed by pressing on a hydraulic expander or a plug die. After forming, the minimum radius of curvature of the bell end at any point shall not be less than 15 times the thickness of the steel shell. Bell ends shall be formed in a manner to avoid impairment of the physical properties of the steel shell. Joints shall permit a lap at least 1 1/2 inches when assembled. The longitudinal or spiral weld on the inside of the bell end and the outside of the spigot end on each section of pipe shall be ground flush with the plate surface. The inside edge of the bell and the outside edge of the spigot shall be scarfed or lightly ground to remove the sharp edges or burrs.

b. Bell and Spigot Joints with O-Ring Gasket

(1) Bell and spigot joints with rubber gasket shall conform to AWWA C-200.

(2) The bell and spigot ends shall be so designed that when the joint is assembled, it will be self-centered and the gasket will be confined to an annular space in such manner that movement of the pipe or hydrostatic pressure cannot displace it. Compression of the gasket when the joint is completed shall not be dependent upon water pressure in the pipe and shall be adequate to ensure a watertight seal when subjected to the specified conditions of service. Bell and spigot ends shall be welded on preformed shapes. The bell and spigot ends shall conform to the reviewed Shop Drawings.

8. Interior and Exterior Protective Surface Coatings

a. Exterior Surface to be mortar coated shall conform to AWWA C-205 for shop application and AWWA C-602 for field application. Pipe materials shall be the product of an organization, which has had not less than 5 years successful experience manufacturing pipe materials, and the design and manufacture of the pipe, including all materials, shall be the product of one company.

b. All surfaces except as noted in c and d below shall receive shop application of mortar lining and coating.

c. Field Welded Joints. After installation, clean, line and coat unlined or uncoated ends adjacent to welded field joints, including the weld proper, as specified for pipe adjacent to the weld. Potable water only shall be used in the preparation of any cement, mortar, or grout lining.

d. Machined Surfaces. Shop coat machined surfaces with a rust preventative compound. After jointing surfaces, remaining exposed surfaces shall be coated per a) and b) above.

(o) Corrugated Metal Pipe

1. General

Pipe shall be corrugated continuous lock or welded seam helically corrugated pipe. Corrugated metal pipe may be galvanized steel, aluminized steel or aluminum conforming to the following:

Galvanized Steel	AASHTO M 218
Aluminized Steel	AASHTO M 274
Aluminum	AASHTO M 197

Where reference is made herein to gage of metal, the reference is to U.S. Standard Gage for uncoated sheets. Tables in AASHTO M 218 and AASHTO M 274 list thickness for coated sheets in inches. The Tables in AASHTO M 197 list thickness in inches for clad aluminum sheets.

Sampling and testing of metal sheets and coils used for corrugated metal pipe shall be in accordance with TXDOT Test Method Tex-708-I.

Damaged spelter coating shall be repaired by thoroughly wire brushing the damaged area and removing all loose, cracked or weld-burned spelter coating. The cleaned area shall be painted with a zinc dust-zinc oxide paint conforming to Federal Specifications TT-P 641b. Damaged pipe shall be rejected and removed from the project.

Damaged aluminized coating shall be repaired in accordance with the manufacturer's recommendations.

The following information shall be clearly marked on each section of pipe:

Thickness and corrugations

Trade Mark of the manufacturer

Specification compliance

2. Fabrication

a. Steel Pipe

Galvanized or aluminized steel pipe shall be full circle or arch pipe conforming to AASHTO M 36, Type I or Type II as indicated.

It may be fabricated with circumferential corrugations; lap joint construction with riveted or spot welded seams or it may be fabricated with helical corrugations with continuous helical lock seam or ultra high frequency resistance butt-welded seams.

b. Aluminum Pipe

Pipe shall conform to AASHTO M 196, Type I, circular pipe or Type II, pipe arch as indicated. It may be fabricated with circumferential corrugations; lap joint construction with riveted or spot welded seams or it may be fabricated with helical corrugations with a continuous helical lock seam.

Portions of aluminum pipe that are to be in contact with high chloride concrete or metal other than aluminum, shall be insulated from these materials by a coating of bituminous material. The coating applied to the pipe or pipe arch to provide insulation between the aluminum and other material shall extend a minimum distance of 1 foot beyond the area of contact.

3. Selection of Gages

The pipe diameter, permissible corrugations and required gauges for circular pipe shall be as indicated on the drawings.

For pipe arch, the span, rise, gage, corrugation size and coating thickness shall be as shown on the drawings. A tolerance of plus or minus 1 inch or 2 percent of equivalent circular diameter, whichever is greater, will be permissible in span and rise, with all dimensions measured from the inside crests of the corrugations.

4. Joint Material

Except as otherwise indicated, coupling bands and other hardware for galvanized or aluminized steel pipe shall conform to AASHTO M 36 for steel pipe and AASHTO M 196 for aluminum pipe. Field joints for each type of corrugated metal pipe shall maintain pipe alignment during construction and prevent infiltration of soil material during the life of the installation.

Coupling bands shall be not more than 3 nominal sheet thickness lighter than the thickness of the pipe to be connected and in no case lighter than 0.052 inch for steel or 0.048 inch for aluminum.

Coupling bands shall be made of the same base metal and coating (metallic or otherwise) as the pipe.

Coupling bands shall lap equally on each of the pipes being connected to form a tightly closed joint after installation.

Pipes furnished with circumferential corrugations shall be field jointed with corrugated locking bands. This includes pipe with helical corrugations, which has reformed circumferential corrugations on the ends. The locking bands shall securely fit into at least one full circumferential corrugation on each of the pipe ends being coupled. The minimum width of the corrugated locking bands shall be as shown below for the corrugation which corresponds to the end circumferential corrugations on the pipes being joined:

10 1/2 inches wide for 2 2/3 inches x 1/2-inch corrugations.

12 inches wide for 3 inches x 1 inch or 5 inches x 1-inch corrugations.

Helical pipe without circumferential end corrugations will be permitted only when it is necessary to join a new pipe to an existing pipe, which was installed with no circumferential end corrugations. In this event pipe furnished with helical corrugations at the ends shall be field jointed with either helically corrugated bands or with bands with projections or dimples. The minimum width of helically corrugated bands shall conform to the following:

12 inches wide for pipe diameters up to and including 72 inches.

14 inches wide for 1 inch deep helical end corrugations.

Bands with projections shall have circumferential rows of projections with one projection for each corrugation. The width of bands with projections shall be not less than the following:

12 inches wide for pipe diameters up to and including 72 inches.

The bands shall have 2 circumferential rows of projections.

16 1/4 inches wide for pipe diameters of 78 inches and greater.

The bands shall have 4 circumferential rows of projections.

Unless otherwise indicated, all bolts for coupling bands shall be 1/2-inch diameter. Bands 12 inches wide or less shall have a minimum of 2 bolts and bands greater than 12 inches wide shall have a minimum of 3 bolts.

Galvanized bolts may be hot dip galvanized conforming to AASHTO M 232, mechanically galvanized to provide the same requirements as AASHTO M 232 or electro-galvanized per ASTM A 164 Type RS.

5. Additional Coatings or Linings

a. Bituminous Coated

Bituminous Coated pipe or pipe arch shall be as indicated both as to base metal and fabrication and in addition shall be coated inside and out with a bituminous coating which shall meet the performance requirements set forth herein. The bituminous coating shall be 99.5 percent soluble in carbon bisulphide. The pipe shall be uniformly coated inside and out to a minimum thickness of 0.05 inch, measured on the crests of the corrugations.

The bituminous coating shall adhere to the metal tenaciously, shall not chip off in handling and shall protect the pipe from deterioration as evidenced by samples prepared from the coating material successfully meeting the Shock Test and Flow Test in accordance with Test Method Tex-522-C.

b. Paved Invert

Where a Paved Invert is indicated, the pipe or pipe arch, in addition to the fully coated treatment described above, shall receive additional bituminous material of the same specification as above, applied to the bottom quarter of the circumference to form a smooth pavement with a minimum thickness of 1/8 inch above the crests of the corrugations.

c. Cement Lined

(1) General

Except as modified herein, pipe shall conform to AASHTO M 36 for lock seam or welded helically corrugated steel pipe. Pipe shall be of full circle and shall be fabricated with two annular corrugations for purposes of joining pipes together with band couplers. Lock seams shall develop the seam strength as required in Table 3 of AASHTO M 36. Concrete lining shall conform to the following:

Composition

Concrete for the lining shall be composed of cement, fine aggregate and water that are well mixed and of such

consistency as to produce a dense, homogeneous, non-segregated lining.

Cement

Portland Cement shall conform to AASHTO M 85.

Aggregate

Aggregates shall conform to AASHTO M 6 except that the requirements for gradation and uniformity of gradation shall not apply.

Mixture

The aggregates shall be sized, graded, proportioned and thoroughly mixed with such proportions of cement and water as will produce a homogenous concrete mixture of such quality that the pipe will conform to the design requirements indicated. In no case, however, shall the proportions of Portland Cement, blended cement or Portland Cement plus pozzolanic admixture be less than 470 lb/cu. yd of concrete.

Thickness

The lining shall have a minimum thickness of 1/8 inch above the crest of the corrugations.

Lining Procedures

The lining shall be plant applied by a machine traveling through a stationary pipe. The rate of travel of the machine and the rate of concrete placement shall be mechanically regulated so as to produce a homogenous nonsegregated lining throughout.

Surface Finish

The lining machine shall also mechanically trowel the concrete lining as the unit moves through the pipe.

Certification

Furnish manufacturer's standard certification of compliance upon request of the purchaser.

Joints

Pipe shall be joined together with coupling bands made from steel sheets to an indicated thickness of 0.064 inch (12 ga.). Coupling bands shall be formed with two corrugations that

are spaced to provide seating in the third corrugation of each pipe end without creating more than 1/2 inch ± annular space between pipe ends when joined together.

Bands shall be drawn together by two 1/2 inch galvanized bolts through the use of a bar and strap suitably welded to the band.

When O-ring gaskets are indicated they shall be placed in the first corrugation of each pipe and shall be compressed by tightening the coupling band. Rubber O-ring gaskets shall conform to Section 5.9, ASTM C 361.

(2) Causes for Rejection

Pipe shall be subject to rejection on account of failure to conform to any of the indications. Individual sections of pipe may be rejected because of any of the following:

Damaged ends, where such damage would prevent making satisfactory joint.

Defects that indicate poor quality of work and could not be easily repaired in the field.

Severe dents or bends in the metal itself.

If concrete lining is broken out, pipe may be rejected or at the discretion of the E/A, repaired in the field in accordance with the manufacturer's recommendation.

Hairline cracks or contraction cracks in the concrete lining are to be expected and does not constitute cause for rejection.

d. Fiber Bonded

Where fiber bonded pipe is indicated, the pipe or pipe arch shall be formed from sheets whose base metal shall be as indicated. In addition, the sheets shall have been coated with a layer of fibers, applied in sheet form by pressing them into a molten metallic bonding. If a paved invert is indicated it shall be in accordance with the procedure outlined above. The test for spelter coating above is waived for fiber bonded pipe.

6. Slotted Drain Storm Sewers

The pipes for the slotted drain and slotted drain outfall shall be helically corrugated, lock seam or welded seam pipe. Materials and fabrication shall be in accordance with the above. The metal thickness shall be a minimum 16 gage.

The chimney assemblies shall be constructed of 3/16 inch welded plate or machine formed 14 gage galvanized steel sheets. The height of the chimney required shall be as indicated. Metal for the welded plate slot shall meet the requirements of ASTM A 36 and the completed plate slot shall be galvanized after fabrication in accordance with ASTM A 123.

Weld areas and the heat affected zones where the slot is welded to the corrugated pipe shall be thoroughly cleaned and painted with a good quality asphalt base aluminum paint.

7. Mortar

Mortar shall be composed of 1 part Type I Portland Cement and 2 parts clean, sharp mortar sand suitably graded for the purpose and conforming in other respects to the provisions for fine aggregate of Item No. 403, "Concrete for Structures". Hydrated lime or lime putty may be added to the mix, but in no case shall it exceed 10 percent by weight of the total dry mix.

(9) Geotextile Filter Fabric for Pipe Bedding Material

Geotextile filter fabric for pipe bedding material shall be Hanes Geo Components - TerraTex NO4.5 (AOS US Standard Sieve 70) geotextile fabric or approved equal.

510.3 Construction Methods

(1) General

Prior to commencing this Work, all erosion control and tree protection measures required shall be in place and all utilities located and protected as set forth in "General Conditions". Clearing the site shall conform to Item No. 102S, "Clearing and Grubbing". Maintenance of environmental quality protection shall comply with all requirements of "General Conditions" and Item No. 601S, "Salvaging and Placing Topsoil".

The Contractor shall Work such that a reasonable minimum of disturbance to existing utilities will result. Particular care shall be exercised to avoid the cutting or breakage of all existing utilities. If at any time the Contractor’s operations damage the utilities in place, the Contractor shall immediately notify the owner of the utility to make the necessary repairs. When active wastewater sewer lines are cut in the trenching operations, temporary flumes shall be provided across the trench while open and the lines shall be restored when the backfilling has progressed to the original bedding lines of the sewer so cut.

The Contractor shall inform utility owners sufficiently in advance of the Contractor's operations to enable such utility owners to reroute, provide temporary detours or to make other adjustments to utility lines in order that the Contractor may Work with a minimum of delay and expense. The Contractor shall cooperate with all utility owners concerned in effecting any utility adjustments necessary and shall not hold

the City liable for any expense due to delay or additional Work because of conflicts arising from existing utilities.

The Contractor shall do all trenching in accordance with the provisions and the directions of the E/A as to the amount of trench left unfilled at any time. All excavation and backfilling shall be accomplished as indicated and in compliance with State Statutes.

Where excavation for a pipe line is required in an existing City street, a street cut permit is required and control of traffic shall be as indicated in accordance with the Texas Manual on Uniform Traffic Control Devices.

Wherever existing utility branch connections, sewers, drains, conduits, ducts, pipes or structures present obstructions to the grade and alignment of the pipe, they shall be permanently supported, removed, relocated or reconstructed by the Contractor through cooperation with the owner of the utility, structure or obstruction involved. In those instances where their relocation or reconstruction is impractical, a deviation from line and grade will be ordered by the E/A and the change shall be made in the manner directed.

Adequate temporary support, protection and maintenance of all underground and surface utility structures, drains, sewers and other obstructions encountered in the progress of the Work shall be furnished by, and at the expense of, the Contractor and as approved by the E/A.

Where traffic must cross open trenches, the Contractor shall provide suitable bridges in conformance with Standard 804S-4. Adequate provisions shall be made for the flow of sewers; drains and watercourses encountered during construction and any structures, which may have been disturbed, shall be satisfactorily restored upon completion of Work.

When rainfall or runoff is occurring or is forecast by the U.S. Weather Service, the Contractor shall not perform or attempt any excavation or other earth moving Work in or near the flood plain of any stream or watercourse or on slopes subject to erosion or runoff, unless given specific approval by the E/A. When such conditions delay the Work, an extension of time for working day contracts will be allowed in accordance with "General Conditions".

(2) Water Line/New Wastewater Line Separation

Separation between water, reclaimed water, and wastewater lines shall be provided as shown in the Drawings.

Crossings of water, reclaimed water, and wastewater lines shall conform to details in the Drawings.

Wastewater manholes within 9 feet of water and reclaimed water lines shall be made watertight according to details in the Drawings.

(3) Utility and Storm Sewer Crossings

When the Contractor installs a pipe that crosses under a utility or storm sewer structure and the top of the pipe is within 18 inches of the bottom of the structure, the pipe shall be backfilled as shown in the Drawings. When the Contractor installs a pipe that crosses under a utility or storm sewer structure that is not shown in the Drawings, the pipe shall be backfilled as directed by the Engineer. Payment for backfilling pipe at utility or storm sewer structures not shown in the Drawings shall be by Change Order.

(4) Trench Excavation

Excavation in a paved street shall be preceded by saw cutting completely through any asphaltic cement concrete or portland cement concrete surface, base, or subbase to the underlying subgrade. This requirement shall not apply to excavations made with trenching machines that use a rotating continuous belt or chain for cutting and removing of material.

Underground piped utilities shall be constructed in an open cut in accordance with Federal regulations, applicable State Statutes conforming to Item No. 509S, "Excavation Safety Systems" and with a trench width and depth described below. When pipe is to be constructed in fill above the natural ground, Contractor shall construct embankment to an elevation not less than one foot above the top of the pipe, after which trench is excavated. Required vertical sides shall be sheeted and braced as indicated to maintain the sides of the required vertical excavation throughout the construction period. Adequacy of the design of sheeting and bracing shall be the responsibility of the Contractor's design professional. The Contractor shall be responsible for installation as indicated. After the pipe has been laid and the backfill placed and compacted to 12 inches above the top of the pipe, any sheeting, shoring and bracing required may be removed with special care to insure that the pipe is not disturbed. As each piece of sheeting is removed, the space left by its removal must be thoroughly filled and compacted with suitable material and provisions made to prevent the sides of the trench from caving until the backfill has been completed. Any sheeting left in place will not be paid for and shall be included in the unit price bid for pipe.

(5) Trench Width

Trenches for water, reclaimed, and wastewater lines shall have a clear width on each side beyond the outside surfaces of the pipe bell or coupling of not less than 6 inches nor more than 12 inches.

Trenches for Storm Sewers up to 42 inches shall have a width of 1 foot on each side beyond the outside surfaces of the pipe. Pipes more than 42 inches shall have a trench width not to exceed 18 inches on each side beyond the outside surfaces of the pipe.

If the trench width within the pipe zone exceeds this maximum, the entire pipe zone shall be refilled with approved backfill material, thoroughly compacted to a minimum of 95 percent of maximum density as determined by TxDOT Test Method Tex-114-E and then re-excavated to the proper grade and dimensions. Excavation along curves and bends shall be so oriented that the trench and pipe are

approximately centered on the centerline of the curve, using short lengths of pipe and/or bend fittings if necessary.

For all utilities to be constructed in fill above natural ground, the embankment shall first be constructed to an elevation not less than 1 foot above the top of the utility after which excavation for the utility shall be made.

(6) Trench Depth and Depth of Cover

All pipe and in-line appurtenances shall be laid to the grades indicated. The depth of cover shall be measured from the established finish grade, natural ground surface, subgrade for staged construction, street or other permanent surface to the top or uppermost projection of the pipe.

(a) Where not otherwise indicated, all potable/reclaimed water piping shall be laid to the following minimum depths:

1. Potable/reclaimed water piping installed in undisturbed ground in easements of undeveloped areas, which are not within existing or planned streets, roads or other traffic areas shall be laid with at least 36 inches of cover.

2. Potable/reclaimed water piping installed in existing streets, roads or other traffic areas shall be laid with at least 48 inches of cover below finish grade.

3. Unless approved by the E/A, installation of potable/reclaimed water piping in proposed new streets will not be permitted until paving and drainage plans have been approved and the roadway traffic areas excavated to the specified or standard paving subgrade, with all parkways and sidewalk areas graded according to any applicable provisions of the drainage plans or sloped upward from the curb line to the right of way line at a minimum slope of 1/4 inch per foot. Piping and appurtenances installed in such proposed streets shall be laid with at least 36 inches of cover below the actual subgrade.

(b) Where not otherwise indicated, all wastewater piping shall be laid to the following minimum depths:

1. Wastewater piping installed in natural ground in easements or other undeveloped areas, which are not within existing or planned streets, roads or other traffic areas shall be laid with at least 42 inches of cover.

2. Wastewater piping installed in existing streets, roads or other traffic areas shall be laid with at least 66 inches of cover.

3. Wastewater piping installed in such proposed streets shall be laid with at least 48 inches of cover below the actual subgrade.

(7) Classification of Excavation

Excavation will not be considered or paid for as a separate item of Work, so excavated material will not be classified as to type or measured as to quantity. Full payment for all excavation required for the construction shall be included in the various unit or lump sum Contract prices for the various items of Work installed, complete in place. No extra compensation, special treatment or other consideration will be allowed due to rock, pavement, caving, sheeting and bracing, falling or rising water, working under and in the proximity of trees or any other handicaps to excavation.

(8) Dewatering Excavation

Underground piped utilities shall not be constructed or the pipe laid in the presence of water. All water shall be removed from the excavation prior to the pipe placing operation to insure a dry firm granular bed on which to place the underground piped utilities and shall be maintained in such unwatered condition until all concrete and mortar is set. Removal of water may be accomplished by bailing, pumping or by a well-point installation as conditions warrant.

In the event that the excavation cannot be dewatered to the point where the pipe bedding is free of mud, a seal shall be used in the bottom of the excavation. Such seal shall consist of Class B concrete, conforming to Item No. 403, "Concrete for Structures", with a minimum depth of 3 inches.

(9) Trench Conditions

Before attempting to lay pipe, all water, slush, debris, loose material, etc., encountered in the trench must be pumped or bailed out and the trench must be kept clean and dry while the pipe is laid and backfilled. Where needed, sump pits shall be dug adjoining the trench and pumped as necessary to keep the excavation dewatered.

Backfilling shall closely follow pipe laying so that no pipe is left exposed and unattended after initial assembly. All open ends, outlets or other openings in the pipe shall be protected from damage and shall be properly plugged and blocked watertight to prevent the entrance of trench water, dirt, etc. The interior of the pipeline shall at all times be kept clean, dry and unobstructed.

Where the soil encountered at established footing grade is a quicksand, saturated or unstable material, the following procedure shall be used unless other methods are indicated:

All unstable soils shall be removed to a depth of a minimum 2 feet below bottom of piped utility or as required to stabilize the trench foundation. Such excavation shall be carried out for the entire trench width.

All unstable soil so removed shall be replaced with a concrete seal, foundation rock or coarse aggregate materials placed across the entire trench width in uniform layers not to exceed 6 inches, loose measure and compacted by mechanical tamping or other means which shall provide a stable foundation for the utility.

Forms, sheathing and bracing, pumping, additional excavation and backfill required in unstable trench conditions shall be included in the unit price bid for pipe.

(10) Blasting

All blasting shall conform to the provisions of the "General Conditions" and/or "Public Safety and Convenience".

(11) Removing Old Structures

When out of service masonry structures or foundations are encountered in the excavation, such obstructions shall be removed for the full width of the trench and to a depth of 1 foot below the bottom of the trench. When abandoned inlets or manholes are encountered and no plan provision is made for adjustment or connection to the new sewers, such manholes and inlets within the construction limits shall be removed completely to a depth 1 foot below the bottom of the trench. In each instance, the bottom of the trench shall be restored to grade by backfilling and compacting by the methods provided above. Where the trench cuts through storm or wastewater sewers which are known to be abandoned, these sewers shall be cut flush with the sides of the trench and blocked with a concrete plug in a manner satisfactory to the E/A. When old structures are encountered, which are not visible from the existing surface and are still in service, they shall be protected and adjusted as required to the finished grade.

(12) Lines and Grades

Grades, lines and levels shall conform to the General Conditions and/or "Grades, Lines and Levels". Any damage to the above by the Contractor shall be re-established at the Contractor's expense. The Contractor shall furnish copies of all field notes and "cut sheets" to the City.

The location of the lines and grades indicated may be changed only by direction of the E/A. It is understood that the Contractor will be paid for Work actually performed on the basis of the unit Contract prices and that the Contractor shall make no claim for damages or loss of anticipated profits due to the change of location or grade.

All necessary batter boards or electronic devices for controlling the Work shall be furnished by, and at the expense of, the Contractor. Batter boards shall be of adequate size material and shall be supported substantially. The boards and all location stakes must be protected from possible damage or change of location. The Contractor shall furnish good, sound twilled lines for use in achieving lines and grades and the necessary plummets and graduated poles.

The Contractor shall submit to the Engineer at least six copies of a detailed pipe laying schedule for review and approval. The laying schedule shall list all types of pipe, fittings, valves, hydrants, flanged outlets, and other appurtenances required for construction. The Contractor shall submit the laying schedule at least 30 days in advance of construction on the project. The Engineer will forward review comments to the Contractor for revisions. The Contractor shall make revisions and forward to

the Engineer for review. Prior to start of construction on the Project, the Engineer will send a reviewed final laying schedule marked for construction to the Contractor. Should the Contractor's procedures not produce a finished pipe placed to grade and alignment, the pipe shall be removed and relayed and the Contractors procedures modified to the satisfaction of the E/A. No additional compensation shall be paid for the removal and relaying of pipe required above.

(13) Surplus Excavated Materials

Excess material or material which cannot be made suitable for use in embankments will be declared surplus by the E/A and shall become the property of the Contractor to dispose of off site at a permitted fill site, without liability to the City or any individual. Such surplus material shall be removed from the Work site promptly following the completion of the portion of the utility involved.

(14) Pipe Bedding Envelope

Pipe shall be installed in a continuous bedding envelope of the type shown on the drawings or as described herein. The envelope shall extend the full trench width, to a depth of at least 6 inches (150 mm) below the pipe and to a depth of the springline of storm water pipe and at least 12 inches (300 mm) above water, reclaimed, and wastewater pipe.

Standard Bedding Materials

USE / PIPE MATERIAL	Cement Stabilized Backfill	Natural or Mf'd Sand	Pea Gravel	PIPE BEDDING STONE			
				Uncrushed Gravel	Crushed Gravel	Crushed Stone	Stone Screenings
WATER and RECLAIMED WATER							
Welded Steel	X					X	
Service Tubing 3/4" to 2-1/2"		X	X				X
WATER and RECLAIMED WATER (Ductile Iron)							
Up to 15 Inch ID		X	X	X			X
Larger Than 15 Inch ID			X	X			
WATER and RECLAIMED WATER (PVC only) and WASTEWATER							
Up to 15 Inch ID		X	X	X	X	X	X
Larger Than 15 Inch ID			X	X	X	X	
STORMWATER							

Concrete		X	X	X	X	X	X
Metal		X	X	X			X

(b) General requirements and limitations governing bedding selection.

1. Crushed gravel or crushed stone shall not be used with polyethylene tubing or polyethylene film wrap.

2. Uncrushed gravel may be used with polyethylene film wrap in trenches up to 6 feet deep and in deeper trenches where ample trench width, a tremmie, or conditions will allow controlled placement of the gravel without damaging the polyethylene wrap.

3. Bedding shall be placed in lifts not exceeding 8 inches loose thickness and compacted thoroughly to provide uniform support for the pipe barrel and to fill all voids around the pipe.

4. Pea Gravel or bedding stone shall be used in blasted trenches.

(c) Requirements to prevent particle migration.

Bedding material shall be compatible with the materials in the trench bottom, walls and backfill so that particle migration from, into or through the bedding is minimized. The E/A may require one or more of the following measures to minimize particle migration: use of impervious cut-off collars; selected bedding materials, such as pea gravel or bedding stone mixed with sand; filter fabric envelopment of the bedding; cement stabilized backfill; or other approved materials or methods. Measures to minimize particle migration will be shown on the Drawings or designated by the E/A, and, unless provisions for payment are provided in the contract documents, the cost of these measures shall be agreed by change order. The following limitations shall apply.

1. groundwater is present, or in trenches with grades greater than 5 percent.

2. Pea gravel or bedding stone, alone, shall not be used in the street right-of-way within 5 feet of subgrade elevation in trenches that are 3 feet or wider.

3. each gravel or bedding stone, alone, shall not be used where the trench bottom, sides, or backfill is composed of non-cementitious, silty or sandy soils having plasticity indices less than 20, as determined by the E/A.

4. Sand, alone, shall not be used for installation of concrete storm water pipe unless the bedding envelope is wrapped with a geotextile membrane and the joints of the stormdrain conduit are wrapped to

prevent the migration of fines into the bedding envelope and into the stormdrain conduit

5. For concrete storm water pipe, if pea gravel, uncrushed gravel, crushed gravel, crushed stone, or combination thereof is used for pipe bedding material, a geotextile filter fabric shall be placed around the perimeter of the joint

(15) Laying Pipe

No pipe shall be installed in the trench until excavation has been completed, the bottom of the trench graded and the trench completed as indicated.

Laying of corrugated metal pipes on the prepared foundation shall be started at the outlet end with the separate sections firmly joined together, with outside laps of circumferential joints pointing upstream and with longitudinal laps on the sides. Any metal in joints, which is not protected by galvanizing, shall be coated with suitable asphaltum paint. Proper facilities shall be provided for hoisting and lowering the sections of pipe into the trench without damaging the pipe or disturbing the prepared foundation and the sides of the trench. Any pipe which is not in alignment or which shows any undue settlement after laying or damage shall be taken up and re-laid without extra compensation.

Multiple installations of corrugated pipe or arches shall be laid with the centerlines of individual barrels parallel. When not otherwise indicated, clear distances of 2 feet between outer surfaces of adjacent pipes shall be maintained.

No debris shall remain in the drainways or drainage structures.

All recommendations of the manufacturer shall be carefully observed during handling and installation of each material. Unless otherwise indicated, all materials shall be delivered to the project by the manufacturer or agent and unloaded as directed by the Contractor. Each piece shall be placed facing the proper direction near to where it will be installed.

The interior of all pipe, fittings and other accessories shall be kept free from dirt and foreign matter at all times and stored in a manner that will protect them from damage. Stockpiled materials shall be stacked so as to minimize entrance of foreign matter.

The interior of all pipeline components shall be clean, dry and unobstructed when installed.

Piping materials shall not be skidded or rolled against other pipe, etc. and under no circumstances shall pipe, fittings or other accessories be dropped or jolted.

During handling and placement, materials shall be carefully observed and inspected and any damaged, defective or unsound materials shall be marked, rejected and removed from the job site. Minor damage shall be marked and

repaired in a manner satisfactory to the E/A. Joints, which have been placed, but not joined, backfilled, etc., shall be protected in a manner satisfactory to the E/A.

(16) Assembling of Pipe

Angular spacing of all joints shall meet the manufacturer's recommendations for the pipe and accessories being used. Side outlets shall be rotated so that the operating stems of valves shall be vertical when the valves are installed. Pressure pipe shall be laid with bell ends facing the direction of pipe installation. Pipe end bells shall be placed upgrade for all wastewater lines.

Orientation marks, when applicable, shall be in their proper position before pipe is seated.

Before joining any pipe, all foreign matter, lumps, blisters, excess coal tar coating, oil or grease shall be removed from the ends of each pipe and the pipe ends shall then be wire brushed and wiped clean and dry. Pipe ends shall be kept clean until joints are made.

Every precaution shall be taken to prevent foreign material from entering the pipe during installation. No debris, tools, clothing or other materials shall be placed in the pipe.

(17) Joints

(a) Mortar (Storm Drain joints only)

Pipe ends shall be clean, free of asphalt or other contaminants, which will inhibit the bond of the mortar to the pipe. The pipe ends shall be moistened immediately prior to placing the mortar in the joint.

(b) Cold Applied Preformed Plastic Gaskets (Storm Drain joints only)

The pipe ends shall be clean and the joint material applied to the dry pipe. In cold weather, the joint material shall be heated to facilitate the seal of the joint.

(c) O-Ring and Push-on Joints

Just before making a joint the ends of the pipe shall be clean, dry, free of any foreign matter, lump blisters, excessive coal tar coating and grease or oil and shall be wire brushed. The gasket and the inside surface of the bell shall be lubricated with a light film of soft vegetable soap compound (Flax Soap) to facilitate telescoping the joints. The rubber gasket if not factory installed shall be stretched uniformly as it is placed in the spigot groove to insure a uniform volume of rubber around the circumference of the groove. The spigot shall be centered in the bell, the pipe pushed home uniformly and brought into true alignment. Bedding material shall be placed and tamped against pipe to secure the joint. Care should be taken to prevent dirt or foreign matter from entering the joint space.

(d) Bolted Joints

All flanged, mechanical or other bolted joints shall be joined with nuts and bolts and be coated as indicated above in Iron Pipe.

(e) Storm Drain Joints

Storm drain joints sealed with preformed flexible joint sealants shall be provided and installed in compliance with ASTM C990. Storm drain joints sealed with rubber gaskets shall comply with ASTM C443. Install joint sealants in accordance with the pipe and joint sealant manufacturers' recommendations. Place the joint sealer so that no dirt or other deleterious materials come in contact with the joint sealing material. Pull or push home the pipe with enough force to properly seal the joint with the final joint opening (gap) on the inside of the installed pipe being less than or equal to the pipe manufacturer's recommended dimensions. Protrusion of joint material greater than 1/8" into the interior of the pipe will not be accepted. Excess joint material will be removed to within 1/8''of pipe surface. Observe joint sealant manufacturer's recommendations for installation temperature of the joint sealant. Apply joint sealant to pipe joint immediately before placing pipe in trench, and then connect pipe to previously laid pipe.

If inspection (video or other means) reveal C-990 joints that show signs of backfill infiltration, or where joints or conduits exhibit excessive joint gap or are otherwise defective, then the contractor has the following options:

1. Conduits less than 36-inches in any dimension**:** pour a concrete collar around the joint or wrap joint with a wrap meeting requirements of ASTM C-877 or approved equal
2. Conduits greater than or equal to 36-inches in all dimensions: repair joints using joint repair techniques recommended by the manufacturer to achieve a completed system that meets all Contract requirements.

(18) Pressure Pipe Laying

(a) Grout for Concrete Steel Cylinder Pipe (CSC) and Welded Steel Pipe

Aggregate, cement, etc., shall be as indicated in "Mortar" herein. Potable water shall be used in the preparation of any cement, mortar, or grout lining.

Grout shall be poured into the recess between the bell and spigot on the outside of the pipe and contained by a joint wrapper ("diaper") recommended by the pipe manufacturer. The wrapper shall have a minimum width of 7 inches for 30 inch and smaller and 9 inches for larger pipe, secured to the pipe by "Band Iron" steel straps. The grout shall be poured in one continuous operation in such manner that after shrinkage and curing the joint recess shall be completely filled.

Mortar for the inside recess shall be of the consistency of plaster. The inside recess between the bell and spigot shall be filled with mortar after the pipe joint on either side of the recess has been backfilled and well tamped with no less than one pipe joint installed ahead of the pipe forming the recess. The mortar shall completely fill the recess and shall be trowelled and packed into place and finished off smooth with the inside of the pipe.

The Contractor shall inspect the joint after the mortar has set and make repairs of any pockets, cracks or other defects caused by shrinkage to the satisfaction of the E/A. The inside surface shall be cleared of any mortar droppings, cement, water, slurry, etc., before they have become set and shall be cleared of any other foreign matter. The inside surface of the pipe shall be left clean and smooth.

Pipe shall be handled at all times with wide non abrasive slings, belts or other equipment designed to prevent damage to the coating and all such equipment shall be kept in such repair that its continued use is not injurious to the coating. The use of tongs, bare pinch-bars, chain slings, rope slings without canvas covers, canvas or composition belt slings with protruding rivets, pipe hooks without proper padding or any other handling equipment, which the E/A deems to be injurious to the coating, shall not be permitted. The spacing of pipe supports required to handle the pipe shall be adequate to prevent cracking or damage to the cement mortar lining.

(19) Placing Pipe in Tunnels

Piping installed as a carrier pipe in a tunnel, encasement pipe, etc., shall have uniform alignment, grade, bearing and conform to the reviewed Shop Drawings. All necessary casing spacers, bedding material, grout cradle or paving, bracing, blocking, etc., as stipulated by the Contract or as may be required to provide and maintain the required pipe alignment and grade, shall be provided by the Contractor at no cost except as provided by the Bid Items. This shall include casing spacers acceptable to the Owner attached to the carrier pipe in accordance with the manufacturer's recommendations. The insertion pushing forces shall not exceed the pipe manufacturer's recommendation. Such carrier piping shall have flexible bolted or gasketed push-on joints or Concrete Steel Cylinder pipe installed as follows:

(a) 21 Inch Pipe and Smaller

Prior to placing the pipe in the tunnel, the inside joint recess at the bell shall be buttered with cement mortar.

After the joint is engaged, the excess mortar shall be smoothed by pulling a tight fitting swab through the joint. Cement mortar protection shall then be placed in the normal manner to the exterior of the joint and allowed to harden sufficiently to avoid dislodgment during installation. If time is of the essence, a quick setting compound may be used.

(b) 24 Inch Pipe and Larger

Each length of pipe shall be pushed into the tunnel as single units. A flexible mastic sealer shall be applied to the exterior of the joint prior to joint engagement. The surfaces receiving the mastic sealer shall be cleaned and primed in accordance with the manufacturer's recommendation. Sufficient quantities of the mastic sealer shall be applied to assure complete protection of all steel in the joint area. The interior of the joint shall be filled with cement mortar in the normal manner after the pipe is in its final position within the tunnel.

(20) Temporary Pipe Plugs, Caps, Bulkheads and Trench Caps

Temporary plugs, caps or plywood bulkheads shall be installed to close all openings of the pipe and fittings when pipeline construction is not in progress.

All temporary end plugs or caps shall be secured to the pipe as provided under Item No. 507, "Bulkheads".

Trench caps shall be reinforced Class D concrete as indicated.

(21) Corrosion Control

(a) Protective Covering

Unless otherwise indicated, all flanges, nuts, bolts, threaded outlets and all other iron or steel components buried and in contact with earth or backfill shall be wrapped with 8-mil (minimum) polyethylene film meeting ANSI/AWWA C-105 to provide a continuous wrap.

(22) Pipe Anchorage, Support and Protection

Pressure pipeline tees, plugs, caps and bends exceeding 22-1/2 degrees; other bends as directed shall be securely anchored by suitable concrete thrust blocking or by approved metal harness. Unless otherwise indicated, on 24 inch or larger piping, all bends greater than 11 1/4 degrees shall be anchored as described herein.

Storm sewers on steep grades shall be lugged as indicated.

(a) Concrete Thrust Blocking

Concrete for use as reaction or thrust blocking shall be Class B conforming to Item No. 403, "Concrete for Structures".

Concrete blocking shall be placed between solid ground and the fitting to be anchored. The area of bearing on the pipe and on the ground shall be as indicated or directed by the E/A. The blocking shall, unless otherwise indicated, be so placed that the pipe, fittings and joints will be accessible for repair.

The trench shall be excavated at least 6 inches outside the outermost projections of the pipe or appurtenance and the trench walls shaped or

undercut according to the detail Drawings or as required to provide adequate space and bearing area for the concrete.

The pipe and fittings shall be adequately weighted and laterally braced to prevent floating, shifting or straining of the pipeline while the concrete is being placed and taking initial set. The Contractor shall be solely responsible for the sufficiency of such restraints.

(b) Metal Thrust Restraint

Fabricated thrust restraint systems such as those described below may be approved for use instead of concrete blocking. To obtain approval, the project Drawings must include sufficient drawings, notes, schedules, etc., to assure that the proposed restraints as installed will be adequate to prevent undesirable movement of the piping components. Such restraint systems may only be used where and as specifically detailed and scheduled on approved Project Drawings.

1. Thrust Harness

A metal thrust harness of tie rods, pipe clamps or lugs, turnbuckles, etc., may be approved. All carbon steel components of such systems, including nuts and washers, shall be hot-dip galvanized; all other members shall be cast ductile iron. After installation, the entire assembly shall be wrapped with 8-mil polyethylene film, overlapped and taped in place with duct tape to form a continuous protective wrap.

2. Restrained Joints

Piping or fitting systems utilizing integral mechanically restrained joints may be approved. All components of such systems shall be standard manufactured products fabricated from cast ductile iron, hot-dip galvanized steel, brass or other corrosion resistant materials and the entire assembly shall be protected with a continuous film wrap as described for 1. above. Manufacturers of pipe with restrained joints integral to the pipe shall be listed on SPL WW-27F. All pipe and fitting systems with restrained joints shall be identified by applying an adhesive-backed warning tape to the top of the pipe and for the full length of the pipe, regardless of the type of pipe. For plastic pipes the warning tape shall be applied directly to the top of the pipe. For metal pipes and fittings the warning tape shall be applied to the top of the polyethylene film wrap. The warning tape shall conform to 510.2(8)(b)5.

Location, configuration and description of such products shall be specifically detailed on the Drawings. (Add-on attachments such as retainer glands, all-thread rods, etc., are not acceptable.)

(c) Concrete Encasement, Cradles, Caps and Seals

When trench foundation is excessively wet or unstable or installation of water or wastewater pipe will result in less than 30 inches of cover, Contractor shall notify E/A. E/A may require Contractor to install a concrete seal, cradle, cap, encasement or other appropriate action.

All concrete cap, etc., shall be continuous and begin and end within 6 inches of pipe joints. Concrete cap, cradle and encasement shall conform to City of Austin Standard No. 510S-1, “Concrete Trench Cap”. The pipe shall be well secured to prevent shifting or flotation while the concrete is being placed.

(d) Anchorage Bulkheads

Concrete bulkheads keyed into the undisturbed earth shall be placed as indicated to support and anchor the pipe and/or backfill against end thrust, slippage on slopes, etc. Concrete material and placement shall be Class A, Item No. 403, "Concrete for Structures".

(e) Trench Caps, Concrete Rip-Rap and Shaped Retards

Where called for by the Contract or as directed by the E/A, concrete trench caps, concrete rip-rap and/or shaped retards shall be placed as detailed by the Drawings as protection against erosion. Concrete material and placement shall be Class B, Item No. 403, "Concrete for Structures".

(23) Wastewater Connections

(a) Connections to Mains 12 Inches and Smaller

All branch connections of new main lines shall be made by use of manholes.

Service stubs shall be installed as indicated. Minimum grade shall be 1 percent downward to main and minimum cover shall be 4 1/2 feet at the curb. Standard plugs shall be installed in the dead end before backfilling.

Where a service connection to a main 12 inches or smaller is indicated, a wye, tee or double wye shall be installed.

Where a service connection to a main 15 inches or larger is indicated, a field tap may be made with the pipes installed crown to crown. The tap should be made conforming to the pipe manufacturer's recommendations with the E/A’s approval.

Where not otherwise indicated, (wastewater) service connections shall be installed so that the outlet is at an angle of not more than 45 degrees above horizontal at the main line.

(b) Connections to the Existing System

Unless otherwise specified by the E/A, all connections made to existing mains shall be made at manholes with the crown of the inlet pipe installed at the same elevation as the crown of the existing pipe. Service stubs installed

on the existing system shall be installed by use of tapping saddles unless otherwise approved by the E/A. Extreme care shall be exercised to prevent material from depositing in the existing pipe as the taps are being made.

When connections to existing mains are made, a temporary plug approved by the E/A must be installed downstream in the manhole to prevent water and debris from entering the existing system before Final Completion. These plugs shall be removed after the castings are adjusted to finish grade or prior to Final Completion.

(c) Connecting Existing Services to New Mains

Where wastewater services currently exist and are being replaced from the main to the property line, those services shall be physically located at the property line prior to installing any new mains into which the services will be connected. Where wastewater services currently exist but are not being replaced to the property line, those services shall be physically located at the point of connection between the new and existing pipes prior to installing any new mains into which the services will be connected.

(24) Potable or Reclaimed Water System Connections

All necessary connections of new piping or accessories to the existing potable or reclaimed water system shall be made by, and at the expense of, the Contractor. To minimize any inconvenience from outages, the Contractor shall schedule all such connections in advance and such schedule must be approved by the E/A before beginning any Work.

(a) Shutoffs

The City will make all shutoffs on existing potable or reclaimed water mains. The Contractor shall be required to notify the E/A's field representative on the job at least 72 hours prior to the desired time for any shutoff. The E/A's field representative will notify any affected utility customers at least 48 hours prior to the shutoff. The Water Utility will make the shutoff after ensuring that all appropriate measures have been taken to protect the potable or reclaimed water system, customers and employees.

The City will operate all valves to fill existing mains. Where a newly constructed main has not been placed in service and has only one connection to the potable or reclaimed system, the Contractor may operate one valve to fill the main after approval has been obtained from the Water Utility. The operation of the valve is to be conducted under the immediate supervision of the E/A's field representative.

Water for the Work shall be metered and furnished by the Contractor in accordance with Section 01500 of the Standard Contract Documents.

(b) Wet Connections to Existing Water Potable or Reclaimed System

The Contractor shall make all wet connections called for by the Contract or required to complete the Work. Two connections to an existing line performed during the same shutout, at the same time and at a distance less than 50 linear feet apart, will be considered one wet connection. Two connections to an existing line performed during the same shutout, at the same time and at a distance equal to, or greater than 50 linear feet will be considered two wet connections. A wet connection shall include draining and cutting into existing piping and connecting a new pipeline or other extension into the existing pressure piping, forming an addition to the potable or reclaimed water transmission and distribution network.

The Contract price for wet connections shall be full payment for all necessary shutoffs, excavation, removing plugs and fittings, pumping water to drain the lines, cutting in new fittings, blocking and anchoring piping, bedding and backfilling, placing the lines and service and all site cleanup.

No water containing detectable amounts of chlorine may be drained, released or discharged until specific planning and appropriate preparations to handle, dilute and dispose of such chlorinated water are approved in advance by the City and the disposal operations will be witnessed by an authorized representative from the City.

(c) Pressure Taps to Existing Potable or Reclaimed Water System

The Contractor shall make all pressure taps called for by the Contract Documents or required to complete the Work. A pressure tap shall consist of connecting new piping to the existing potable or reclaimed water system by drilling into the existing pipe while it is carrying water under normal pressure without taking the existing piping out of service.

Unless otherwise provided by the Contract, the Contractor shall, at the Contractor's expense, perform all necessary excavation, furnish and install the tapping sleeve, valve and accessories, provide the tapping machine, drill the tap and shall block, anchor and backfill the piping, valve and all accessories, place the new piping in service and perform all site cleanup. When the City makes the tap, City forces are not obligated or expected to perform any Work except to provide tapping machine and drill the actual hole. If City crews are to make the tap, fiscal arrangements must be made in advance at the Taps Office, Waller Creek Center, 625 East 10th Street.

If a private Contractor makes the tap, an Austin Water Utility Inspector must be present. "Size on size" taps will not be permitted, unless made by use of an approved full circle gasket tapping sleeve. Concrete blocking shall be placed behind and under all tap sleeves 24 hours prior to making the wet tap.

(d) Service Connections

Service connection taps into PVC or AC pipe or into CI or DI pipe 12 inches or smaller shall be made using either a service clamp or saddle or a tapping

sleeve as recommended by the pipe manufacturer and as approved by the E/A. Direct tapping of these pipes will not be permitted.

All potable or reclaimed water service connections shall be installed so that the outlet is at an angle of not more than 45 degrees above horizontal at the main line.

Precautions should be taken to ensure that the tapping saddle or sleeve is placed on the pipe straight to prevent any binding or deformation of the PVC pipe. The mounting chain or U-bolt strap must be tight.

Tapping shall be performed with a sharp shell type cutter so designed that it will smoothly penetrate heavy walled PVC DR14 and 200 psi AC and will retain and extract the coupon from the pipe.

(25) Backfilling

(a) General

Special emphasis is placed upon the need to obtain uniform density throughout the backfill material. The maximum lift of backfill shall be determined by the compaction equipment selected and in no case shall it exceed 18 inches, loose measurement.

No heavy equipment, which might damage pipe, will be allowed over the pipe until sufficient cover has been placed and compacted. All internal pipe bracing installed or recommended by the manufacturer shall be kept in place until the pipe bedding and trench backfill have been completed over the braced pipe section. Testing of the completed backfill in streets and under and around structures shall meet the specified density requirements. Initial testing shall not be at Contractor's expense and shall conform to the "General Conditions."

(b) General Corrugated Metal Pipe

After the corrugated metal pipe structure has been completely assembled on the proper line and grade and headwalls constructed where indicated; selected material free from rocks over 8 inches in size from excavation or borrow, as approved by the E/A, shall be placed along both sides of the completed structures equally, in uniform layers not exceeding 6 inches in depth (loose measurement), sprinkled if required and thoroughly compacted between adjacent structures and between the structures and the sides of the trench.

Backfill material shall be compacted to the same density requirements as indicated for the adjoining sections of embankment in accordance with the governing specifications thereof. Above the 3/4 point of the structure, the fill shall be placed uniformly on each side of the pipe in layers not to exceed 12 inches, loose measure.

Prior to adding each new layer of loose backfill material, until a minimum of 12 inches of cover is obtained over the crown of the pipe, an inspection will be made of the inside periphery of the corrugated metal structure to determine if any floating, local or unequal deformation has occurred as a result of improper construction methods.

(c) Backfill Materials

The E/A may approve any of the following well graded materials:

1. Select trench material
2. Sand
3. Crushed rock cuttings
4. Rock cuttings
5. Foundation Rock
6. Blasted material with fines and rock
7. Cement stabilized material
8. Borrow

Within the 100-year flood plain, sand will not be permitted for backfilling. The E/A will approve the topsoil for areas to be seeded or sodded.

(d) Backfill in Street Right of Way

Placement of backfill under existing or future pavement structures and within 2 feet of any structures shall be compacted to the required density using any method, type and size of equipment, which will give the required compaction without damaging the pipe or bedding. Placement of backfill greater than 2 feet beyond structures in Right of Way shall be conform to (g) below. The depth of layers, prior to compaction, shall depend upon the type of sprinkling and compacting equipment used and the test results thereby obtained. Prior to and in conjunction with the compaction operation, each layer shall be brought to the moisture content necessary to obtain the required density and shall be kept level to insure uniform compaction over the entire layer. Testing for density shall be in accordance with Test Method Tex-114-E and Test Method Tex-115-E.

Each layer of backfill must provide the density as required herein. Swelling soils (soils with plasticity index of 20 or more) shall be sprinkled as required to provide not less than optimum moisture nor more than 2 percent over optimum moisture content and compacted to the extent necessary to provide not less than 95 percent nor more than 102 percent of the density as determined in accordance with Test Method Tex-114-E. Non-swelling soils (soils with plasticity index less than 20) shall be sprinkled as required and

compacted to the extent necessary to provide not less than 95 percent of the density as determined in accordance with Test Method Tex-114-E.

After each layer of backfill is complete, tests may be made by the E/A. If the material fails to meet the density indicated, the course shall be reworked as necessary to obtain the indicated compaction and the compaction method shall be altered on subsequent Work to obtain indicated density.

At any time, the E/A may order proof rolling to test the uniformity of compaction of the backfill layers. All irregularities, depressions, weak or soft spots that develop shall be corrected immediately by the Contractor.

Should the backfill, due to any reason, lose the required stability, density or finish before the pavement structure is placed, it shall be recompacted and refinished at the sole expense of the Contractor. Excessive loss of moisture in the subgrade shall be prevented by sprinkling, sealing or covering with a subsequent backfill layer or granular material. Excessive loss of moisture shall be construed to exist when the subgrade soil moisture content is more than 4 percent below the optimum of compaction ratio density. Backfill shall be placed from the top of the bedding material to the existing grade, base course, subgrade or as indicated. The remainder of the street backfill shall be Flexible Base, Concrete or Hot Mix Asphalt Concrete as indicated or to replaced in kind to the surface removed to construct the pipe.

(e) Backfill in County Street or State Highway Right of Way

All Work within the right of way shall meet the requirements of (d) above, as a minimum and shall meet the requirements of the permit issued by the County when their requirements are more stringent. Prior to the start of construction, the Contractor shall be responsible for contacting the appropriate TxDOT office or County Commissioner's Precinct Office and following the operating procedures in effect for utility cut permits and pavement repair under their jurisdiction. Approval for all completed Work in the State or County right of way shall be obtained from the appropriate Official prior to final payment by the Owner.

(f) Backfill in Railroad Right of Way

All Work within the railroad right of way shall meet the requirements of (d) above, as a minimum and shall meet the requirements of the permit issued by the Railroad Owner when their requirements are more stringent. Approval for all completed Work in the railroad right of way shall be obtained from the Railroad prior to Final Completion.

(g) Backfill in Easements

Where not otherwise indicated, Contractor may select whatever methods and procedures may be necessary to restore entire Work area to a safe, useful and geologically stable condition with a minimum density of 85 percent or a density superior to that prior to construction.

In and near flood plain of all streams and watercourses, under or adjacent to utilities, structures, etc. all backfill shall be compacted to a density of not less than 95 percent conforming to TxDOT Test Method Tex-114-E, unless otherwise directed by E/A.

All soil areas disturbed by construction shall be covered with top soil and seeded conforming to Item No. 604, "Seeding for Erosion Control". All turf, drainways and drainage structures shall be constructed or replaced to their original condition or better. No debris shall remain in the drainways or drainage structures.

(h) Temporary Trench Repair/Surfacing

If details of temporary trench repair/surfacing are not provided in the contract documents, the Contractor shall submit for approval of the E/A (1) a plan for temporary trench repair for areas that will be open to traffic but will be excavated later for full depth repair, and (2) a proposed method for covering trenches to maintain access to properties. The temporary surfacing shall afford a smooth riding surface and shall be maintained by the Contractor the entire time the temporary surface is in place.

(i) Permanent Trench Repair

The Contractor shall install permanent trench repairs conforming to details in the drawings.

(26) Quality Testing for Installed Pipe

(a) Wastewater Pipe Acceptance Testing

After wastewater pipe has been backfilled, the Contractor shall perform infiltration tests, exfiltration tests, or low pressure air tests as determined by the E/A. In addition. the Contractor shall perform deflection tests and shall assist OWNER'S personnel, as directed, in performing pipeline settlement tests. The Contractor shall be responsible for making appropriate repairs to those element that do not pass any of these tests.

(b) Exfiltration Test

Water for the Work shall be metered and furnished by the Contractor in accordance with Section 01500 of the Standard Contract Documents.

Exfiltration testing shall be performed by the Contractor when determined by the E/A to be the appropriate test method. Exfiltration testing shall conform to requirements of the Texas Commission on Environmental Quality given in the Texas Administrative Code Title 30 Part 1 Chapter 317 Rule §317.2.

(c) Infiltration Test

Infiltration testing shall be performed by the Contractor when determined by the E/A to be the appropriate test method. Infiltration testing shall conform to

requirements of the Texas Commission on Environmental Quality given in the Texas Administrative Code Title 30 Part 1 Chapter 317 Rule §317.2.

(d) Pipeline Settlement Test

During the infiltration test or after the exfiltration test, the pipe will be TV inspected for possible settlement. When air testing has been used, water shall be flowed into the pipe to permit meaningful observations. Any pipe settlement which causes excessive ponding of water in the pipe shall be cause for rejection. Excessive ponding shall be defined as a golf ball (1-5/8" dia.) submerged at any point along the line.

(e) Low Pressure Air Test of Gravity Flow Wastewater Lines

1. General

Wastewater lines up to 24-inch diameter shall be air tested between manholes. Wastewater lines 30-inch in diameter shall be air tested between manholes or at pipe joints. Wastewater lines 36-inch diameter and larger shall be air tested at joints. Backfilling to grade shall be completed before the test and all laterals and stubs shall be capped or plugged by the Contractor so as not to allow air losses, which could cause an erroneous test result. Manholes shall be plugged so they are isolated from the pipe and cannot be included in the test.

All plugs used to close the sewer for the air test shall be capable of resisting the internal pressures and must be securely braced. Place all air testing equipment above ground and allow no one to enter a manhole or trench where a plugged sewer is under pressure. Release all pressure before the plugs are removed. The testing equipment used must include a pressure relief device designed to relieve pressure in the sewer under test at 10 psi or less and must allow continuous monitoring of the test pressures in order to avoid excessive pressure. Use care to avoid the flooding of the air inlet by infiltrated ground water. (Inject the air at the upper plug if possible.) Use only qualified personnel to conduct the test.

2. Ground Water

Since the presence of ground water will affect the test results, test holes shall be dug to the pipe zone at intervals of not more than 100 feet and the average height of ground water above the pipe (if any) shall be determined before starting the test.

3. Test Procedure

The E/A may, at any time, require a calibration check of the instrumentation used. Use a pressure gauge having minimum divisions of 0.10 psi and an accuracy of 0.0625 psi. (One ounce per square inch.) All air used shall pass through a single control panel. Clean the sewer

to be tested and remove all debris where indicated. Wet the sewer prior to testing. The average backpressure of any ground water shall be determined (0.433 psi) for each foot of average water depth (if any) above the sewer.

Add air slowly to the section of sewer being tested until the internal air pressure is raised to 3.5 psig greater than the average backpressure of any ground water that may submerge the pipe. After the internal test pressure is reached, allow at least 2 minutes for the air temperature to stabilize, adding only the amount of air required to maintain pressure. After the temperature stabilization period, disconnect the air supply. Determine and record the time in seconds that is required for the internal air pressure to drop from 3.5 psig to 2.5 psig greater than the average backpressure of any ground water that may submerge the pipe.

For pipe less than 36-inch diameter, compare the time recorded with the time computed using the following equation:

$T = (0.0850 \times D \times K) \div Q$, where

T = time for pressure to drop 1.0 pounds per square inch gauge in seconds;

$K = 0.000419 \times D \times L$, but not less than 1.0

D = nominal inside diameter, in inches, as marked on the pipe;

L = length of line of same pipe size in feet; and

Q = rate of loss, 0.0015 cubic feet per minute per square foot of internal surface area (ft3/min/ft sq) shall be used.

Because a K value of less than 1.0 shall not be used, there are minimum test times for each pipe diameter as shown in the following table:

Table For Low Pressure Air Testing of Pipe

Pipe Diameter (inches)	Minimum Time (seconds)	Minimum Time applies to All Pipes Shorter than (feet)	Time for Longer Pipes (seconds)
8	454	298	1.520 × L
10 (See Note 1)	567	239	2.374 × L
12	680	199	3.419 × L
15	850	159	5.342 × L
18	1020	133	7.693 × L
21	1190	114	10.471 × L
24	1360	100	13.676 × L
30	1700	80	21.369 × L

Note 1. 10 inch diameter pipe to be used only by Austin Water Utility maintenance personnel.

Any drop in pressure, from 3.5 psig to 2.5 psig (adjusted for groundwater level), in a time less than that required by the above equation or table shall be cause for rejection. When the line tested includes more than one size pipe, the minimum time shall be that given for the largest size pipe included.

Lines that are 36 inches or larger inside diameter must be air tested at each joint. Lines that are 30-inch diameter may be air tested at each joint. The minimum time allowable for the pressure to drop from 3.5 pounds per square inch to 2.5 pounds per square inch gauge during a joint test, regardless of pipe size, shall be twenty (20) seconds. A drop in pressure from 3.5 psig to 2.5 psig (adjusted for groundwater level) in less than twenty seconds shall be cause for rejection.

Manholes must be tested separately and independently. All manholes must be hydrostatically tested with a maximum loss allowance of 0.025 gallon per foot diameter per foot of head per hour.

When lines are air tested, manholes are to be tested separately by exfiltration or vacuum method (see Standard Specification Item No. 506S, “Manholes”).

(f) Deflection Test

Deflection tests shall be performed by the Contractor on all flexible and semi-rigid wastewater pipes. The tests shall be conducted after the final backfill has been in place at least 30 days. Testing for in-place deflection shall be with a pipe mandrel at 95% of the inside diameter of the pipe. A second test of flexible and semi-rigid wastewater pipes 18 inch size and larger, also with a pipe mandrel sized at 95% of the inside diameter of the pipe, shall be conducted by the Contractor 30 days before the warranty expires on the Contractor’s Work.

Contractor shall submit proposed pipe mandrels to the E/A or the E/A’s designated representative for concurrence prior to testing the line.

Test(s) must be performed without mechanical pulling devices and must be witnessed by the E/A or the E/A’s designated representative.

Any deficiencies noted shall be corrected by the Contractor and the test(s) shall be redone.

(g) Inspection of Installed Storm Drain Conduits

1. General
All storm drain conduits (pipe and box culvert) shall be inspected for conformance to the requirements of this specification. Smart Housing,

low/moderate income housing, and projects that are 100-percent privately funded are exempt from the cost of the initial video inspection. All deficiencies revealed by inspection shall be corrected. Video re-inspection meeting the requirements of this specification shall be provided at the Contractor's expense to show that deficiencies have been corrected satisfactorily. Further, the contractor shall provide video in complete segments (manhole to manhole) versus specific deficiency locations.

Projects that are not exempt from the cost of the initial video inspection are also subject to the following constraints:

- All inspectors utilized by the Contractor for video inspection shall be NASSCO-PACP certified for a minimum of 3 years.
- The Contractor will be required to inspect, assess, and record the condition of the storm drain pipe using National Association of Sewer Service Companies (NASSCOs) Pipeline Assessment Certification Program (PACP) coding standards.

2. Video Inspection of Installed Storm Drain Conduits

Contractor shall provide all labor, equipment, material and supplies and perform all operations required to conduct internal closed-circuit television and video recording of all storm drain conduits. Video recording of each storm drain conduit section shall be conducted after the trench has been backfilled and prior to placement of permanent pavement repairs or permanent pavement reconstruction. The video recording shall be provided to the Owner for review. Contractor shall not place permanent pavement repairs or permanent pavement reconstruction over the storm drain conduit until Owner has reviewed the video and agrees that there are no defects in the storm drain conduit installation shown in the video submitted by the Contractor or shown in any video acquired by the Owner through other means. Placement of permanent pavement repair or permanent pavement reconstruction over the installed storm drain conduit before the Owner acknowledges no defects shall be at the Contractor's risk. Any defects revealed by the video inspection shall be corrected at the Contractor's expense and a new video submitted to the Owner for review prior to acceptance of the conduit.

All video work shall be conducted under the direct full-time supervision of a NASSCO-PACP certified operator.

The conduit inspection camera shall have the capability of panning plus/minus 275 degrees and rotating 360 degrees. The television camera shall be specifically designed and constructed for such use. The camera shall be operative in 100% humidity conditions. Camera shall have an accurate footage counter that displays on the monitor the exact distance of the camera (to the nearest tenth of a foot) from the centerline of the starting manhole or access point. Camera shall have height adjustment so that the camera lens is always centered within plus/minus 10% of the center axis of the conduit being videoed. Camera shall provide a minimum of 460 lines of horizontal

resolution and 400 lines of vertical resolution. Camera shall be equipped with a remote iris to control the illumination range for an acceptable picture. Geometrical distortion of the image shall not exceed one percent (1%). The video image produced by each camera shall be calibrated using a Marconi Resolution Chart No. 1 or equivalent.

Lighting for the camera shall be sufficient to allow a clear picture of the entire periphery of the conduit without loss of contrast, flare out of picture or shadowing. A reflector in front of the camera may be required to enhance lighting in dark or large sized conduit. The video camera shall be capable of showing on the digital display the Owner's name, Project name, Contractor name, date, line size and material, conduit identification, and ongoing footage counter. The camera, television monitor, and other components of the video system shall be capable of producing a picture quality satisfactory to the satisfaction of the Owner. The recording of the internal condition of the storm drain conduit shall be clear, accurate, focused and in color. If the recording fails to meet these requirements, the, equipment shall be removed and replaced with equipment that is suitable. No payment will be made for an unsatisfactory recording.

If during video inspection, water is encountered inside the conduit, the conduit shall be dewatered by the Contractor. The storm drain section must be dry. Video recording conducted while the camera is floating is not acceptable unless approved by the Owner.

If during video inspection, debris is encountered that prohibits a proper inspection of the conduit, the Contractor shall remove the debris before proceeding.

All video shall be documented using a data logger and reporting system that are PACP compliant and which use codes as established by the National Association of Sewer Service Companies (NASSCO)s - Pipeline Assessment and Certification Program (PACP).

Computer printed location records shall be kept by the Contractor and shall clearly show the location and orientation of all points of significance such as joints, conduit connections, connections at manholes and inlets, and defects. Copy of all records shall be supplied to the Owner. Noted defects shall be documented as color digital files and color hard copy print-outs. Photo logs shall accompany each photo submitted.

The video recording shall supply a visual and audio record of the storm drain conduits that may be replayed. Video recordings shall include an audio track recorded by the video technician during the actual video work describing the parameters of the storm drain conduit being videoed (i.e. location, depth, diameter, pipe material), as well as describing connections, defects and unusual conditions observed during the video work. Video recording playback shall be at the same speed that it was recorded. Slow motion or stop-motion playback features may be supplied at the option of the Contractor. Once

videoed, the CDs/DVDs shall be labeled and become the property of the Owner. The Contractor shall have all video and necessary playback equipment readily accessible for review by the Owner while the project is under construction.

Post-installation video shall not be completed until all work is completed on a section of storm drain conduit. Post-installation video work shall be completed by the Contractor in the presence of the Owner. The post-installation video work shall be completed to confirm that the storm drain conduits are free of defects. Provide a color video showing the completed work. Prepare and submit video logs providing location of storm drain conduit along with location of any defects. Manhole and inlet work shall be complete prior to post-installation video work.

For post-installation video, exercise the full capabilities of the camera equipment to document the completion and conformance of the storm drain installation work with the Contract Documents. Provide a full 360-degree view of conduit, all joints, and all connections. The camera shall be moved through the storm drain conduit in either direction at a moderate rate, stopping and slowly panning when necessary to permit proper documentation of the conduit condition at each pipe connection, joint, and defect. In no case shall the camera be pulled at a speed greater than 30 feet per minute. Manual winches, power winches, TV cable, and powered rewinds or other devices that do not obstruct the camera view or interfere with proper documentation of the storm drain conditions shall be used to move the camera through the storm drain conduit. When manually operated winches are used to pull the camera through the conduit, telephones or other suitable means of communication shall be set up between the two access points of the conduit being videoed to insure good communication between members of the video crew.

Distance measurements shall be provided to an accuracy of one tenth of a foot.

Video shall be continuous for each storm drain conduit segment. Do not show a single segment on more than one CD/DVD, unless specifically allowed by the Owner."

Contractor shall submit to Owner the following:

A. National Association of Sewer Service Companies (NASSCO) Pipeline Assessment and Certification Program (PACP) certification of operators who will be performing video work.

B. Compact Disc (CD) or Digital Video Disc (DVD) of recording of storm drain conduits (concrete storm water pipe or box culvert).
   a. The color CD or DVD shall include a digital color key map in a format acceptable to the Owner with each segment of storm

drain conduit labeled with the appropriate inspection ID on the map.

b. The file folder for each segment of the storm drain conduit shall have a unique name based on the Owner's approved inspection naming convention and shall contain the following:
   i. Video files
   ii. Video inspection logs with information coded in accordance with the PACP
   iii. Photo logs
   iv. A report summarizing the results of the video inspection
   v. A proposed method of repair for any defects discovered.

3. Time commitments from City for projects that are exempt from the cost of the initial video inspection

Projects that are exempt from the cost of the initial video inspection are afforded the following time commitments from the City.

A. Initial inspection – contractor must inform the City of Austin construction inspector assigned to the project in writing that all stormdrain infrastructure for the project has been completed according to the permit and is ready for inspection. The inspector will then notify the Watershed Protection Department (WPD) in writing that the all of the stormdrain infrastructure for the project has been completed and is ready for inspection. The WPD is allowed 15-days to complete inspection from written notification by the inspector. The outcome of this item does not impact the one-year warranty requirements.

B. Video re-inspection by the contractor for deficient installed stormdrain infrastructure. The contractor must submit the video inspection data as defined in this specification to the City of Austin construction inspector assigned to the project along with a written letter of transmittal certified by a professional engineer stating that all identified stormdrain infrastructure installation deficiencies for the project have been corrected. The inspector will then notify the Watershed Protection Department (WPD) in writing and convey the video inspection data to the WPD. The WPD is allowed 15-days to complete review of the data from the date of delivery by the inspector.

(27) Pressure Pipe Hydrostatic Testing

After the pipe has been installed and backfilled and all service laterals, fire hydrants and other appurtenances installed and connected, a pressure test, followed by a leakage test, will be conducted by the City. The City will furnish the pump and gauges for the tests. The Contractor shall be present and shall furnish all necessary assistance for conducting the tests. The specified test pressures will be based on the elevation of the lowest point of the line or section under test.

Before applying the specified test pressure, all air shall be expelled from the pipe. If permanent air vents are not located at all high points, the Contractor shall install corporation cocks at such points.

All drain hydrant and fire hydrant leads, with the main 6-inch gate valve open and the hydrant valve seats closed and nozzle caps removed, shall be included in the test.

(a) Pressure Test

The entire project or each valved section shall be tested, at a constant pressure of 200 psi for a sufficient period (approximately 10 minutes) to discover defective materials or substandard work. The Contractor assumes all risks associated with testing against valves. Repairs shall be made by the Contractor to correct any defective materials or substandard work. The Contractor shall pre-test new lines before requesting pressure tests by City Forces. The Contractor shall have new lines pressurized to a minimum of 100 psi, on the date of testing, prior to arrival of City Forces.

(b) Leakage Test

A leakage test will follow the pressure test and will be conducted on the entire project or each valved section. The Contractor assumes all risks associated with testing against valves. The leakage test shall be conducted at 150 psi for at least 2 hours. The test pressure shall not vary by more than ±5 psi for the duration of the test.

(1) Allowable Leakage

Leakage shall be defined as the quantity of water that must be supplied into any test section of pipe to maintain the specified leakage test pressure after the air in the pipeline has been expelled and the pipe has been filled with water.

No pipe installation will be accepted if leakage exceeds the amount given by the following formula:

$$\text{Allowable leakage (gal / hr)} = [L \times D] \div 10{,}875$$

Where L = length of pipe tested, in feet

D = nominal pipe diameter, in inches, as marked on the pipe

(2) Location and Correction of Leakage

If such testing discloses leakage in excess of this specified allowable, the Contractor, at the Contractor's expense, shall locate and correct all defects in the pipeline until the leakage is within the indicated allowance.

All visible leakage in pipe shall also be corrected by Contractor at the Contractor's expense.

(28) Service Charges for Testing

Initial testing performed by City forces for the Contractor will be at the City's expense. Retesting, by City forces, of Contractor's work that fails initial testing will be at the Contractor's expense. The City's charge for retests will be $265.00, plus $50.00 for each hour over four hours. On City-funded projects, the charges incurred by the City for retesting will be deducted from funds due the Contractor. On non-City-funded projects, the charges incurred by the City for retesting will be billed to the Contractor. The City will withhold acceptance of the Contractor's work until the Contractor has paid the City for the retesting costs.

(29) Disinfection of Potable Water Lines

(a) Preventing Contamination

The Contractor shall protect all piping materials from contamination during storage, handling and installation. Prior to disinfection, the pipeline interior shall be clean, dry and unobstructed. All openings in the pipeline shall be closed with watertight plugs when pipe laying is stopped at the close of the day's work.

(b) Cleaning

Prior to disinfection the Contractor shall clean the pipeline to remove foreign matter. For pipelines 16" in diameter or smaller, cleaning shall consist of flushing the pipeline. For pipelines greater than 16" in diameter, cleaning shall be performed by operating hydrants and blow-offs located at low points in the pipeline, or by mechanical means (sweeping or pigging. Water for the Work shall be metered and furnished by the Contractor in accordance with Section 01500 of the Standard Contract Documents.

(c) Procedure and Dosage

The Contractor, at its expense, will supply the test gauges and the Sodium Hypochlorite conforming to ANSI/AWWA B300, which contains approximately 5 percent to fifteen percent available chlorine, and will submit for approval a written plan for the disinfection process. Calcium Hypochlorite conforming to ANSI/AWWA B300, which contains approximately 65 percent available chlorine by weight, may be used in granular form or in 5 g tablets for 16" diameter or smaller lines, if it is included as part of the written plan of disinfection that is approved by the City of Austin. The Contractor, at its expense, shall provide all other equipment, supplies and the necessary labor to perform the disinfection under the general supervision of the City.

One connection to the existing system will be allowed with a valve arranged to prevent the strong disinfecting dosage from flowing back into the existing water supply piping. The valve shall be kept closed and locked in a valve box

with the lid painted red. No other connection shall be made until the disinfection of the new line is complete and the water samples have met the established criteria. The valve shall remain closed at all times except when filling or flushing the line and must be staffed during these operations. Backflow prevention in the form of a reduced pressure backflow assembly must be provided if the valve is left unattended. The new pipeline shall be filled completely with disinfecting solution by feeding the concentrated chlorine and approved water from the existing system uniformly into the new piping in such proportions that every part of the line has a minimum concentration of 50 mg/liter available chlorine.

The disinfecting solution shall be retained in the piping for at least 24 hours and all valves, hydrants, services, stubs, etc. shall be operated so as to disinfect all their parts. After this retention period, the water shall contain no less than 25 mg/liter chlorine throughout the treated section of the pipeline.

For pipelines larger than 16” in diameter, the Contractor may use the AWWA C-651 “Slug Method” for disinfecting the pipeline. Chlorine shall be fed at a constant rate and at a sufficient concentration at one end of the pipeline to develop a slug of chlorinated water having not less than 100 mg/liter of free chlorine. The Contractor shall move the slug through the main so that all interior surfaces are exposed to the slug for at least three (3) hours. The chlorine concentration in the slug shall be measured as it moves through the pipeline. If the chlorine concentration drops below 50 mg/liter, the Contractor shall stop the slug and feed additional chlorine to the head of the slug to restore the chlorine concentration to at least 100 mg/liter before proceeding. As the slug flows past fittings and valves, related valves and hydrants shall be operated so as to disinfect appurtenances and pipe branches.

Unless otherwise indicated, all quantities specified herein refer to measurements required by the testing procedures included in the current edition of “Standard Methods”. The chlorine concentration at each step in the disinfection procedure shall be verified by chlorine residual determinations.

(d) Final Flushing

The heavily chlorinated water shall then be carefully flushed from the potable water line until the chlorine concentration is no higher than the residual generally prevailing in the existing distribution system. Proper planning and appropriate preparations in handling, diluting, if necessary, and disposing of this strong chlorine solution is necessary to insure that there is no injury or damage to the public, the water system or the environment. The plans and preparations of the Contractor must be approved by the City before flushing of the line may begin. Additionally the flushing must be witnessed by an authorized representative of the City.

Approval for discharge of the diluted chlorine water or heavily chlorinated water into the wastewater system must be obtained from the Austin Water Utility. The line flushing operations shall be regulated by the Contractor so as not to overload the wastewater system or cause damage to the odor feed

systems at the lift stations. The City shall designate its own representative to oversee the work.

Daily notice of line discharging must be reported to the Austin Water Utility Dispatch office.

(e) Bacteriological Testing

After final flushing of the strong disinfecting solution, two (2) sets of water samples from the line, that are taken at least twenty-four (24) hours apart, will be tested for bacteriological quality by the City and must be found free of coliform organisms before the pipeline may be placed in service. Each set shall consist of one (1) sample that is drawn from the end of the main and additional samples that are collected at intervals of not more than 1000 feet along the pipeline. All stubs shall be tested before connections are made to existing systems.

The Contractor, at its expense, shall install sufficient sampling taps at proper locations along the pipeline. Each sampling tap shall consist of a standard corporation cock installed in the line and extended with a copper tubing gooseneck assembly. After samples have been collected, the gooseneck assembly may be removed and retained for future use.

Samples for bacteriological analysis will only be collected from suitable sampling taps in sterile bottles treated with sodium thiosulfate. Samples shall not be drawn from hoses or unregulated sources. The City, at its expense, will furnish the sterile sample bottles and may, at its discretion, collect the test samples with City personnel.

If the initial disinfection fails to produce acceptable sample test results, the disinfection procedure shall be repeated at the Contractor's expense. Before the piping may be placed in service, two (2) consecutive sets of acceptable test results must be obtained.

An acceptable test sample is one in which: (1) the chlorine level is similar to the level of the existing distribution system; (2) there is no free chlorine and (3) total coliform organisms are absent. An invalid sample is one, which has excessive free chlorine, silt or non-coliform growth as defined in the current issue of the "Standards Methods." If unacceptable sample results are obtained for any pipe, the Contractor may, with the concurrence of the Inspector, for one time only flush the lines and then collect a second series of test samples for testing by the City. After this flushing sequence is completed, any pipe with one or more failed samples must be disinfected again in accordance with the approved disinfection procedure followed by appropriate sampling and testing of the water.

The City of Austin Water Quality Laboratory will notify the assigned City of Austin Inspector in writing of all test results. The Inspector will subsequently notify the Contractor of all test results. The Water Quality Laboratory will not release test results directly to the Contractor.

(30) Cleanup and Restoration

It shall be the Contractor's responsibility to keep the construction site neat, clean and orderly at all times. Cleanup shall be vigorous and continuous to minimize traffic hazards or obstructions along the streets and to driveways. Trenching, backfill, pavement repair (as necessary), and cleanup shall be coordinated as directed by the City. The E/A will regulate the amount of open ditch and may halt additional trenching if cleanup is not adequate to allow for orderly traffic flow and access.

Materials at the site shall be stored in a neat and orderly manner so as not to obstruct pedestrian or vehicular traffic. All damaged material shall be removed from the construction site immediately and disposed of in a proper manner. All surplus excavated materials shall become the property of the Contractor for disposal at the Contractor’s expense. After trenching, the Contractor shall immediately remove all excavated materials unsuitable for or in excess of, backfill requirements. Immediately following the pipe laying Work as it progresses, the Contractor shall backfill, grade and compact all excavations as provided elsewhere. The backfill placed at that time shall meet all compaction test requirements. The Contractor shall immediately clean up and remove all unused soil, waste and debris and restore all surfaces and improvements to a condition equal or superior to that before construction began and to an appearance which complements the surroundings. The Contractor shall grade and dress the top 6 inches of earth surfaces with soil or other material similar and equal to the surrounding, fill and smooth any visible tracks or ruts, replace and re-establish all damaged or disturbed turf or other vegetation and otherwise make every effort to encourage the return of the entire surface and all improvements to a pleasant appearance and useful condition appropriate and complementary to the surroundings and equal or similar to that before construction began.

Placement of the final lift of permanent pavement, if a pavement is required, shall begin immediately after all testing of each segment of piping is satisfactorily completed.

510.4 Measurement

Pipe will be measured by the linear foot for the various types, sizes and classes. Parallel lines will be measured individually.

Where a line ties into an existing system, the length of the new line will be measured from the visible end of the existing system at the completed joint. Unless otherwise indicated, the length of water, reclaimed, and wastewater lines will be measured along pipe horizontal centerline stationing through fittings, valves, manholes, and other appurtenances.

Ductile iron fittings, whether standard mechanical joint or integral factory restrained joint type, will be measured by the ton and paid for in accordance with the schedule in Standard Products List WW-27C. Bolts, glands and gaskets will not be measured for

payment. Steel cylinder concrete pipe fittings and welded steel pipe fittings will not be measured separately and are included in the unit price for the respective pipe bid items.

Factory restrained joint pipe meeting the requirements of Standard Products List WW-27F will be measured by the linear foot. The estimated quantity on the bid form is only for restrained joint pipe having integral mechanically restrained joints.

Connecting a new water, wastewater, or reclaimed water service to an existing, comparable type of private service will be measured by each connection. Service pipe from the main to the service connection will be measured by the linear foot.

The Contractor shall be responsible for removing and treating ground water flowing into a trench up to a baseline flow rate of 350 gpm of sustained flow for each mainline open trench (no more that 300 linear feet open trench per work zone segment is allowed at one time). This baseline flow rate is not a prediction of ground water conditions to be expected on the Project. Rather, it establishes contract terms regarding the quantity of ground water for which the contractor is responsible without extra or separate compensation. The flow rate must exceed 350 gpm continuously for at least 4 consecutive hours to be considered sustained flow. It is expected that trench dewatering for this baseline rate may be accomplished with a single 3-inch trash-type pump per open trench; however, measured flow rate, not pump size, type or characteristics shall be used to determine if the baseline rate has been exceeded. Flow rate shall be determined by measurements made at the discharge point of the water treatment facilities. Surface storm water flowing into a trench shall be the Contractor's responsibility to remove and treat without compensation, regardless of inflow rate or volume.

Adjustment of elevations during construction resulting in changes in flow line elevations of plus or minus two feet or less will not be considered for credit or additional compensation and no measurement for payment will be made.

Stormwater pipe will be measured along the slope of the pipe. Where drainage pipe ties into inlets, headwalls, catch basins, manholes, junction boxes or other structures that length of pipe tying into the structure wall will be included for measurement but no other portion of the structure length or width will be so included.

Excavation and backfill, when included as pipe installation will not be measured as such but shall be included in the unit price bid for constructing pipe and measured as pipe complete in place including excavation and backfill.

When pay items are provided for the other components of the system, measurement will be made as addressed hereunder.

Video inspection of newly installed box culverts and storm drain pipe will be measured per linear foot of pipe videoed.

510.5 Payment

Payment for pipe, measured as prescribed above, will be made at the unit price bid per linear foot for the various sizes of pipe, of the materials and type indicated, unless unstable material is encountered or trench excavation and backfill is bid as a separate item.

The concrete seal, foundation rock or coarse aggregate when used as directed in unstable material will be paid for at the unit price bid per cubic yard, which shall be full payment for all excavation and removal of unsuitable material and furnishing, placing and compacting the foundation rock, coarse aggregate or other approved material all complete in place.

Excavation and backfill, when included as a separate pay item, will be paid for by Pay Item No. 510-E or 510-F.

No separate payment will be made for dewatering a trench with ground water inflow of less than the baseline rate of 350 gpm of sustained flow as described above. Dewatering of those trenches shall be included in the contract unit price of the Pipe pay item. Payment for dewatering a trench with ground water inflow exceeding 350 gpm of sustained flow shall be agreed by change order. Dewatering of bore pits shall be included in the contract unit price for Bore Entry Pit or Exit Pit regardless of inflow rate or volume unless specified otherwise in the bid item for Bore Entry Pit or Exit Pit.

(1) Pipe

Payment for pipe, measured as prescribed above, will be made at the unit price bid per linear foot complete-in-place as designed and represented in the Drawings and other Contract documents. Restrained joint pipe meeting the requirements of Standard Products List WW-27F will be paid for separately at the unit price bid per linear foot. Unless otherwise provided herein, as separate pay item(s), the bid price per linear foot of pipe shall include the following:

clearing

constructing any necessary embankment

excavation

disposal of surplus or unusable excavated material

furnishing, hauling and placing pipe

field constructed joints, collars, temporary plugs, caps or bulkheads

all necessary lugs, rods or braces

pipe coatings and protection

connections to existing systems or structures, concrete blocking and thrust blocks and restrained joints

preparing, shaping, pumping for dewatering, and shoring of trenches

bedding materials

backfill materials

hauling, placing and preparing bedding materials

particle migration measures

hauling, moving, placing and compacting backfill materials

temporary pavement repairs and maintenance

temporary and permanent removal and replacement of pavement, curb, drainage structures, driveways, sidewalks and any other improvements damaged or removed during construction

cleanup

vertical stack on deep wastewater services

all other incidentals necessary to complete the pipe installation as indicated.

pipe joint restraint devices, where specified or allowed, meeting Standard Products Lists WW-27A or WW-27G .

No separate payment will be made for thrust restraint measures.

Steel cylinder concrete pipe fittings and welded steel pipe fittings will not be paid for separately. These will be including in the unit price bid for the bid item Pipe.

(2) Concrete Cradles and Seals

When called for in the Bid, concrete cradles and seals will be paid for at the unit Contract price bid per linear foot for the size of pipe specified, complete in place.

(3) Concrete Retards

When called for in the Bid, Concrete retards will be paid under Item No. 593S, “Concrete Retards".

(4) Boring or Jacking

When called for in the Bid, boring or jacking will be paid under Item 501S, "Jacking or Boring Pipe”.

(5) Wet Connections to Water Mains

When called for in the bid, wet connections will be paid at the unit price bid per each, complete in place, according to the size of the main that is in service and shall be full compensation for all Work required to make the connection and place the pipe in service. (See subsection 510.3 'Construction Methods' part (24) (b) 'Wet Connections to Existing Water System').

(6) Fittings

Ductile iron fittings, furnished in accordance with these specifications, will be paid for at the unit price bid per ton, complete in place, according to the schedule of weights in Standard Products List WW-27C. Bolts, glands, and gaskets will not be paid for separately and shall be included in the contract unit price for fittings.

(7) Concrete Trench Cap and Encasement

Where the distance between the top of the concrete encasement and the top of the trench cap is less than 36 inches, the concrete cap and encasement shall be poured as one unit and paid for under this bid item at the Contract price bid per linear foot. When the distance above is greater than 36 inches or when the trench cap is placed separately, the trench cap shall be paid for as a separate item, per linear foot, complete in place.

(8) Cement-Stabilized Backfill

Cement-stabilized backfill will be paid for at the unit price bid per linear foot and shall be full payment to the Contractor for furnishing and installing the required material, mixed, placed and cured complete in place.

(9) Concrete Encasement

When called for in the Bid, Concrete Pipe Encasement will be paid under Item No. 505S, "Encasement and Encasement Pipe".

(10) Pressure Taps

Pressure taps will be paid for at the unit price bid, complete in place, according to the size tap made and the size main tapped and shall be full payment for furnishing all necessary materials, including tapping sleeve and valve, making the tap, testing and placing the connection in service.

(11) Excavation Safety Systems

When called for in Bid, Trench Safety Systems shall conform to Item No. 509S, "Excavation Safety Systems".

(12) Connecting a New Water, Wastewater, or Reclaimed Water Service to an existing, comparable type of private service will be paid for at the unit price bid, complete in place, according to the size of new service and size of existing private service, and shall be full payment for furnishing and installing all necessary materials, such as cleanouts, pipe, couplings, and fittings, and including excavation and backfill.

(13) Video Inspection

Video Inspection of Newly Installed Box Culverts and Storm Drain Pipe will be paid for at the unit price bid per linear foot and shall be full payment for all labor, equipment, and materials required for video inspection per this specification, including all submittals of CD/DVD as required.

Payment, when included as a Contract pay item, will be made under one of the following:

Pay Item No. 510-AR __Dia.	Pipe, __Dia. _____Type (all depths), including Excavation and Backfill	Per Linear Foot.
Pay Item No. 510-ARRJ-__Dia.:	Factory Restrained Joint Pipe, __Dia. Class____ Ductile Iron, (all depths) including Excavation and Backfill	Per Linear Foot.
Pay Item No. 510-BR___x___Dia.:	Connecting New_____Service to Existing Private Service (____Dia. New Service to ____Dia. Private Service)	Per Each.
Pay Item No. 510 - CR:	Pipe Excavation, ____Ft. Width	Per Linear Foot.
Pay Item No. 510 - DR:	Pipe Trench Backfill, ____Ft. Width	Per Linear Foot.
Pay Item No. 510 - ER:	Concrete Seal or Cradle, ____Dia. Pipe	Per Linear Foot.
Pay Item No. 510 - FR:	Concrete Trench Cap, ____Ft. Width	Per Linear Foot.
Pay Item No. 510 - GR:	Concrete Cap and Encasement, ____Dia. Pipe	Per Linear Foot.
Pay Item No. 510 - HR:	Cement Stabilized Backfill, ___Dia. Pipe	Per Linear Foot.
Pay Item No. 510 - IR___x___Dia.:	Pressure Taps, ___ Dia. X ___ Dia.	Per Each.
Pay Item No. 510 - JR___x___Dia.:	Wet Connections, ___ Dia. x ___ Dia.	Per Each.
Pay Item No. 510 - KR:	Ductile Iron Fittings	Per Ton.
Pay Item No. 510-ASD___Dia.:	Pipe, __Dia. Type (all depths), including Excavation and Backfill	Per Linear Foot.
Pay Item No. 510-CSD:	Pipe Excavation, ____Ft. Width	Per Linear Foot.
Pay Item No. 510-DSD:	Pipe Trench Backfill, ____Ft. Width	Per Linear Foot.
Pay Item No. 510-ESD:	Concrete Seal or Cradle, ____Dia. Pipe	Per Linear Foot.
Pay Item No. 510-FSD:	Concrete Trench Cap, ____Ft. Width	Per Linear Foot.

Pay Item No. 510-GSD	Concrete Cap and Encasement, __Dia. Pipe	Per Linear Foot.
Pay Item No. 510-HSD:	Cement Stabilized Backfill, ___Dia. Pipe	Per Linear Foot.
Pay Item No. 510-AW___Dia.:	Pipe, __Dia. Type (all depths), including Excavation and Backfill	Per Linear Foot.
Pay Item No. 510-AWRJ___Dia.:	Factory Restrained Joint Pipe, ___Dia., Class____ Ductile Iron, (all depths) including Excavation and Backfill	Per Linear Foot.
Pay Item No. 510-BW___x___Dia.:	Connecting New_____Service to Existing Private Service (____Dia. New Service to ____Dia. Private Service)	Per Each.
Pay Item No. 510-CW:	Pipe Excavation, ____Ft. Width	Per Linear Foot.
Pay Item No. 510-DW:	Pipe Trench Backfill, ____Ft. Width	Per Linear Foot.
Pay Item No. 510-EW:	Concrete Seal or Cradle, ____Dia. Pipe	Per Linear Foot.
Pay Item No. 510-FW:	Concrete Trench Cap, ____Ft. Width	Per Linear Foot.
Pay Item No. 510-GW:	Concrete Cap and Encasement, __Dia. Pipe	Per Linear Foot.
Pay Item No. 510-HW:	Cement Stabilized Backfill, ___Dia. Pipe	Per Linear Foot.
Pay Item No. 510-IW___x___Dia.	Pressure Taps, ___ Dia. X ___ Dia.	Per Each.
Pay Item No. 510-JW___x___Dia.:	Wet Connections, ___ Dia. x ___ Dia.	Per Each.
Pay Item No. 510-KW:	Ductile Iron Fittings	Per Ton.
Pay Item No. 510-AWW___Dia.:	Pipe, __Dia. ___Type (all depths), including Excavation and Backfill	Per Linear Foot.
Pay Item No. 510-AWWRJ___Dia.	Factory Restrained Joint Pipe, ___Dia., Class Ductile Iron, (all depths) including Excavation and Backfill	Per Linear Foot.
Pay Item No. 510-BWW___x___Dia.:	Connecting New_____Service to Existing Private Service (____Dia. New Service to ____Dia. Private Service)	Per Each.
Pay Item No. 510-CWW:	Pipe Excavation, ____Ft. Width	Per Linear Foot.
Pay Item No. 510-	Pipe Trench Backfill, ____Ft. Width	Per Linear Foot.

DWW:

Pay Item No. 510-EWW:	Concrete Seal or Cradle, ____Dia. Pipe	Per Linear Foot.
Pay Item No. 510-FWW:	Concrete Trench Cap, ____Ft. Width	Per Linear Foot.
Pay Item No. 510-GWW:	Concrete Cap and Encasement, _Dia. Pipe	Per Linear Foot.
Pay Item No. 510-HWW:	Cement Stabilized Backfill, ___Dia. Pipe	Per Linear Foot.
Pay Item No. 510-KWW:	Ductile Iron Fittings	Per Ton.
Pay Item No. 510-VIDEO	Video Inspection of Newly Installed Box Culverts and Storm Drain Pipe	Per Linear Foot.

An “R” after the pay item indicates the use for reclaimed water.

An “SD” after the pay item indicates the use for storm drain.

A "W" after the pay item indicates the use for water.

A "WW" after the pay item indicates the use for wastewater.

End

Applicable References:

Standard Specifications Manual: Item Nos. Ref: 102S, 210S, 402S, 403S, 501S, 505S, 506, 507S, 509S, 593S, 601S, 604S

Standards Manual: Standard Detail Nos. 510S-1, (520 - series).

Design Criteria Manuals: Utilities Criteria Manual, Section 5.

Item No. 602S
Sodding for Erosion Control

602S.1 Description

This item shall govern planting of Bermuda grass; St. Augustine or other acceptable grass sod at locations indicated on the Drawings or as directed by the Engineer or designated representative in accordance with this Standard Specification Item.

This specification is applicable for projects or work involving either inch-pound or SI units. Within the text and accompanying tables, the inch-pound units are given preference followed by SI units shown within parentheses.

602S.2 Submittals

The submittal requirements for this specification item shall include the identification of the type and source of sodding, the type of mulch, type of tacking agent and type and rate of application of fertilizer.

602S.3 Materials

A. Block and Mulch Sod

The sod shall consist of live, growing Bermuda Grass, St. Augustine grass, when shown on the Drawings, or other acceptable grass sod indicated on the Drawings secured from sources that are approved by the Engineer or designated representative. Bermuda Grass sod, St. Augustine sod or other grass sod as shown on the Drawings shall have a healthy, virile root system of dense, thickly matted roots throughout the soil of the sod for a minimum thickness of 1 inch (25 millimeters). The thickness measure does not include grass. The sod shall be cut in rectangular pieces with its shortest side not less than 12 inches (300 mm). The Contractor shall not use sod from areas where the grass is thinned out nor where the grass roots have been dried out by exposure to the air and sun to such an extent as to damage its ability to grow when transplanted.

The sod shall be substantially free from noxious weeds, Johnson grass or other grasses and shall not contain any matter deleterious to its growth or which might affect its subsistence or hardiness when transplanted. Unless the area has been closely pastured, it shall be closely mowed and raked to remove all weeds and long standing stems. Sources from which sod is to be secured shall be approved by the Engineer or designated representative.

Care shall be taken at all times to retain the native soil of the roots of the sod during the process of excavating, hauling and planting. Sod material shall be kept moist from the time it is dug until it is planted. The sod existing at the source shall be watered to the extent required by the Engineer or designated representative prior to excavating.

B. Fertilizer

Fertilizer and the rate of application shall conform to the requirements of Standard Specification Item No. 606S, "Fertilizer".

C. Mulch

Straw mulch shall be oat, wheat or rice straw. Hay mulch may be substituted for straw mulch and shall be Prairie Grass; Bermuda grass or other hay approved by the Engineer or designated representative. The hay or straw mulch shall be free of Johnson grass or other noxious weeds and foreign materials. It shall be kept in a dry condition and shall not be molded or rotted.

D. Water

Water shall be furnished by the Contractor and shall be clean and free of industrial wastes and other substances harmful to the growth of sod or to the area irrigated.

E. Tacking Agents

Tacking agents for straw or hay mulch shall be as shown on the Drawings.

602S.4 Planting Season

All planting shall be done between April and November except as specifically authorized in writing by the Engineer or designated representative.

602S.5 Construction Methods

A. General

After the designated areas have been completed to the lines, grade and cross sections indicated on the Drawings, the surface shall be worked to a depth of not less than 4 inches (100 mm) with a disc, tiller or other equipment approved by the Engineer or designated representative. Fertilizer nutrients shall be applied and tilled. Areas that become crusted shall be reworked to an acceptable condition before sodding. Sodding of the type specified shall conform to the requirements of this Specification Item. The Contractor shall give continuous care to the sodded area until the sod is accepted.

B. Placement

The sod shall be placed on the prepared surface with the edges in close contact and alternate courses staggered. In ditches the sod shall be placed with the longer dimension perpendicular to the flow of water in the ditch. On slopes, starting at the bottom of the slope, the sod shall be placed with the longer dimension parallel to the contours of the ground. The exposed edges of sod shall be buried flush with the adjacent soil. On slopes exceeding 3:1 or where the sod may be displaced, the sod shall be pegged with not less than 4 stakes or ground staples per square yard (square meter) with at least 1 stake or ground staple for each piece of sod.

Pegs shall be of wood lath or similar material, pointed and driven with the flat side against the slope, 6 inches (150 mm) into the ground, leaving approximately 1/2 inch (12.5 mm) of the top above the ground. Ground staples shall not be less than

13 inches (330 mm) in length and shall be constructed of No. 11 gage (3 mm) wire that is bent to form a "U" approximately 1 inch (25 mm) in width.

C. Watering

Immediately after the area is sodded, it shall be watered with a minimum of 5 gallons of water per square yard (22.5 liters per square meter) and at 10 day intervals as needed and as directed by the Engineer or designated representative. Subsequent to the initial application water shall be applied at a minimum rate of 3 gallons per square yard (13.5 liters per square meter), as required on the Drawings or as directed by the Engineer or designated representative until final acceptance by the City or until the grass uniformly reaches a height of 2 1/2 inches (62.5 mm).

Availability of water from the Austin Water Utility will be limited as stated under the Water Conservation Standard, City of Austin Land Development Code Chapter 6-2, Article II, " Water Use Management Plan Established".

The use of potable water will be restricted as stated in City of Austin Land Development Code Sections 6-4-73, 6-4-54, 6-4-63, 6-4-64, 6-4-65, 6-4-81, 6-4-92, 15-9-37(D) and 15-9-101(B).

D. Finishing

Where applicable, the shoulders, slopes and ditches shall be smoothed after planting has been completed and shaped to conform to the desired cross sections shown on the Drawings. Any excess soil from planting operations shall be spread uniformly over adjacent areas or disposed of as directed by the Engineer or designated representative so that the completed surfaces will present a neat appearance. All sodded areas shall be rolled after the initial watering application, when sufficiently dry.

602S.6 Block Sodding

At locations indicated on the Drawings or where directed by the Engineer or designated representative, sod blocks shall be carefully placed on the prepared areas. The fertilizer shall then be applied in accordance with the applicable provisions of Item No. 606S, "Fertilizer" and thoroughly watered. When sufficiently dry, the sodded area shall be rolled or tamped to form a thoroughly compacted, solid mat. Any voids left in the block sodding shall be filled with additional sod and tamped. Surfaces of block sod which, in the opinion of the Engineer or designated representative may slide due to the height and slope of the surface or nature of the soil, shall be pegged with wooden pegs driven through the sod blocks into firm earth sufficiently close to hold the block sod firmly in place. Edges along curbs and drives, walkways, etc., shall be carefully trimmed and maintained until the sodding is accepted.

602S.7 Mulch Sodding

The sod source shall be disked in 2 directions cutting the sod thoroughly to a depth of not less than 4 inches (100 mm). Sod material shall be excavated to a depth of not more than 2 inches (50 mm) below the existing root system, being careful to avoid having soil containing no grass roots. The disked sod may be windrowed or otherwise

handled in a manner satisfactory to the Engineer or designated representative. The material shall be rejected if not kept in a moist condition.

Prior to placement of mulch sod, the cut slopes shall be scarified by plowing furrows 4 inches (100 mm) to 6 inches (150 mm) deep along horizontal slope lines at 2 foot (600 mm) vertical intervals. Excavated material from the furrows shall not protrude more than 3 inches (75 mm) above the original surface of the cut. Fertilizer shall be distributed uniformly over the area in accordance with the applicable provisions of Item No. 606S, "Fertilizer". The sod shall then be deposited upon the prepared area and spread uniformly to the thickness indicated on the Drawings.

Any section that is not true to lines and cross sections shall be remedied by the addition of sod material or by reshaping the material to meet the requirements of "Finishing"[Section 602S.5 (4)]. After the sod material has been spread and shaped, it shall be thoroughly wetted and compacted with a corrugated roller of the "Cultipacker" type. All rolling of slope areas shall be on the contour.

602S.8 Measurement

Work and acceptable material for "Sodding for Erosion Control" will be measured by the square yard (square meter: 1 square meter is equal to 1.196 square yards) complete in place with a minimum of 95 percent growth with a 2 1/2 inch (62.5 mm) stand of grass.

602S.9 Payment

The work performed and materials furnished and measured as provided under "Measurement" will be paid for at the unit bid price for Bermuda Block Sodding", "St. Augustine Block Sodding", "Bermuda Mulch Sodding" or "Other Approved Grass Sodding". The prices shall each represent full compensation for completion of the work including all water applications, rolling, pegging and fertilizer as indicated on the Drawings.

Payment will be made under one of the following:

Pay Item No. 602S-A:	Bermuda Block Sodding -	Per Square Yard.
Pay Item No. 602S-B:	St. Augustine Block Sodding -	Per Square Yard.
Pay Item No. 602S-C:	Bermuda Mulch Sodding -	Per Square Yard.
Pay Item No. 602S-D*:*	Grass Sodding -	Per Square Yard.

End

SPECIFIC CROSS REFERENCE MATERIALS
Specification 602S, “Sodding for Erosion Control”

City of Austin Land Development Code

Designation	*Description*
Chapter 4-2, Article II	Emergency and Peak Day Water Use Management

City of Austin Standard Specification Items

Designation	*Description*
Item No. 606S	Fertilizer

City of Austin Land Development Code

Designation	*Description*
Section 6-4-52	Water Use Management Plan Established
Section 6-4-53	Applicability
Section 6-4-54	Compliance Required
Section 6-4-63	Permanent Water Use Restrictions
Section 6-4-64	Water Conservation Stage One Regulations
Section 6-4-65	Water Conservation Stage Two Regulations
Section 6-4-81	Variance
Section 6-4-92	Penalty
Section 15-9-37(D)	Customer's Responsibilities
Section 15-9-101(B)	Basis for Termination of Service

RELATED CROSS REFERENCE MATERIALS
Specification 602S, "Sodding for Erosion Control"

City of Austin Standard Specification Items

Designation	*Description*
Item No. 110S	Street Excavation
Item No. 111S	Excavation
Item No. 120S	Channel Excavation
Item No. 132S	Embankment
Item No. 601S	Salvaging and Placing Topsoil
Item No. 604S	Seeding for Erosion Control
Item No. 608S	Planting
Item No. 610S	Preservation of Trees and Other Vegetation

Texas Department of Transportation: Standard Specifications for Construction and Maintenance of Highways, Streets, and Bridges

Designation	*Description*
Item No. 100	Preparing Right of Way
Item No. 110	Excavation
Item No. 160	Furnishing and Placing Topsoil
Item No. 162	Sodding for Erosion Control
Item No. 164	Seeding for Erosion Control
Item No. 166	Fertilizer
Item No. 168	Vegetative Watering
Item No. 204	Sprinkling

Item No. 628S
Sediment Containment Dikes

628S.1 Description

This item shall govern the provision and placement of temporary filtration dikes along or across such areas as indicated on the Drawings. This method shall be used during construction only and its purpose shall be to temporarily control erosion by intercepting and retaining sediment.

This specification is applicable for projects or work involving either inch-pound or SI units. Within the text, the inch-pound units are given preference followed by SI units shown within parentheses.

628S.2 Submittals

The submittal requirements for this specification item shall include:

A. Locations and Types of containment dikes (Hay Bales or Triangular Sediment Filter Dike).

B. Seeding

1. Identification of the type, source, mixture, pure live seed (PLS) and rate of application of the seeding.

2. Type of mulch.

3. Type of tacking agent.

4. Type and rate of application of fertilizer.

628S.3 Materials

A. Hay Bales

"Hay Bales" shall be free of Johnson Grass or other nocuous weeds. The bales shall consist of either hay or straw in good condition and be securely tied with wire. Stakes for anchoring bales shall be #4 (10M) reinforcing bars, 1/2 inch (12.5 mm) steel pickets, or 2 x 2 inch (50 x 50 mm) wooden stakes. Hay bales shall be limited to drainage areas less than 2,500 square feet (0.02 hectares).

B. Filter Dike

"Filter Dike" shall be prefabricated from 6x6-D2.9xD2.9 (150x150-MW19xMW19) WWF and 4.5 oz. (127 grams) non-woven polyester filter fabric securely fastened to WWF with galvanized shoat rings or j-clips. A 12-inch (300-mm) skirt shall be a continuous extension of the filter fabric on the upstream face.

The filter fabric shall extend beyond the dike joints to provide a 3-inch (75-mm) overlap. Ends of dike not lapped with filter fabric shall be plugged with filter fabric.

628S.4 Construction Methods

The Contractor may select the material for the dikes, unless otherwise indicated, conforming to the details on the Drawings and Standard Detail Numbers 628S and 628S-1.

Bales shall be placed with ends tightly abutting the adjacent bales. Each bale shall be embedded in the soil a minimum of 4 inches (100 mm) and a maximum of 6 inches (150 mm). Bales shall be securely anchored in place by a minimum of 2 stakes per bale. The first stake in each bale shall be angled toward the previously placed bale to force the bales together. Stakes shall be embedded in the soil a minimum of 1 1/2 feet (0.45 meters). Bales that are not able to be imbedded and are place on impervious cover should be placed level with the concrete and have all bales butted end to end with no voids or gaps between them. Bales shall be bound by either wire or nylon string. Bales shall be replaced every 2 months or more often during wet periods.

For filter dikes, the filters shall be placed with ends tightly abutting the adjacent filter. Each filter and skirt shall be securely anchored in place using 6 inch (150 mm) staples at a maximum spacing of 12 inches (300 mm) on center. Anchoring on impervious areas shall be accomplished with gravel bags placed at 18 inches (450 mm) on center or with a nominal 1 inch by 4 inch (25 mm by 100 mm) board nailed at 18 inches (450 mm) on center.

Silt accumulation behind hay bales and triangular sediment filter dikes shall be removed at a maximum depth of 6 inches (150 mm) or when, in the opinion of the Engineer or designated representative, the structure ceases to function as intended.

All dikes shall be inspected by the Contractor at least monthly and after each rainfall. Dikes shall be repaired or replaced when necessary or as directed by the Engineer or designated representative.

After completion of construction or when directed by the Engineer or designated representative the dike shall be removed and the site re-graded to the final grades. Any depression shall be filled and any accumulations of silt shall be spread or removed to a permitted disposal area. After removal of the dike the area shall be graded and seeded conforming to Item No. 604S, "Seeding for Erosion Control".

628S.5 Measurement

The work performed and the materials furnished as prescribed by this item will be measured by the lineal foot (lineal meter: 1 lineal meter equals 3.281 lineal feet) of "Sediment Containment Dikes", complete in place.

628S.6 Payment

The work performed and materials furnished and measured as provided under "Measurement" will be paid for at the unit bid price per lineal foot of "Sediment Containment Dikes" indicated on the Drawings. The Unit bid price shall include full compensation for: (a) furnishing, hauling and placing all materials including all labor, tools, equipment and incidentals needed to complete the work, (b) the repair and/or replacement of materials, (c) the removal and disposal of all silt and debris and (d) the removal of all dikes, silt and debris after completion of construction or when directed by the Engineer or designated representative.

When indicated on the Drawings, payment for sediment containment will be made under:

Pay Item No. 628S-A:	Sediment Containment Dikes with hay bales	Per Lineal Foot.
Pay Item No. 628S-B:	Sediment Containment Dikes with filter fabric	Per Lineal Foot.

End

SPECIFIC CROSS REFERENCE MATERIALS
Specification 628S, “Sediment Containment Dike"

City of Austin Standard Details

Designation	Description
Number 628S	Triangular Sediment Filter Dike
Number 628S-1	Hay Bale Dike

City of Austin Standard Specifications

Designation	Description
Item No. 604S	Seeding for Erosion Control

City of Austin Standard Contract

Section	Description
00300U	Bid Form (Unit Prices)

RELATED CROSS REFERENCE MATERIALS
Specification 628S, “Sediment Containment Dike"

City of Austin Standard Specifications

Designation	Description
Item No. 101S	Preparing Right of Way
Item No. 102S	Clearing and Grubbing
Item No. 111S	Excavation
Item No. 120S	Channel Excavation
Item No. 401S	Structural Excavation and Backfill
Item No. 406S	Reinforcing Steel
Item No. 602S	Sodding for Erosion Control
Item No. 605S	Soil Retention Blanket
Item No. 606S	Fertilizer
Item No. 608S	Planting
Item No. 610S	Preservation of Trees and Other Vegetation
Item No. 620S	Filter Fabric

RELATED CROSS REFERENCE MATERIALS (Continued)
Specification 628S, “Sediment Containment Dike"

Texas Department of Transportation: Standard Specifications for Construction and Maintenance of Highways, Streets, and Bridges

Designation	Description
Item No. 100	Preparing Right of Way
Item No. 110	Excavation
Item No. 132	Embankment
Item No. 158	Specialized Excavation Work
Item No. 166	Fertilizer
Item No. 168	Vegetative Watering
Item No. 169	Soil Retention Blanket
Item No. 204	Sprinkling

Item No. 700S
Mobilization

700S.1 Description

This item shall govern the mobilization of personnel, equipment and materials at the work site for other contract items that will be performed by the Contractor. Mobilization shall include, but not be limited to the movement of equipment, personnel, material, supplies, etc. to the Work site; the installation of temporary facilities (when not paid for separately) and the establishment of office and other necessary facilities prior to the initiation of the Work. The cost of the Payment Bond and Performance Bond on the Work that is delayed due to circumstances beyond Contractor's control, a closed construction season or for the convenience of the City of Austin will be considered part of the mobilization item under this Contract.

700S.2 Measurement.

Measurement of the Specification Item, "Mobilization", as specified herein as "Total Mobilization Payment", will be by the "Lump Sum", as the Work progresses.

700S.3 Payment.

The adjusted contract amount as used below is defined as the original contract amount less the lump sum bid for Mobilization and any payments for materials or equipment not yet incorporated in the Work. The Contractor shall submit a lump sum amount for Payment Item No. 700S-TM, "Total Mobilization Payment".

"Initial Mobilization Payout" as used below is defined as:

1. 8% of the original contract amount for projects with an original contract amount of $ 0.5 million or less; or
2. 4% of the original contract amount for projects with an original contract amount greater than $ 0.5 million.

In those instances where the "Initial Mobilization Payout", as defined above, exceeds the "Total Mobilization Payment" lump sum bid item (i.e. Payment Item No. 700S-TM), the "Total Mobilization Payment" shall be used as the "Initial Mobilization Payout". In no instance shall the "Initial Mobilization Payout" exceed the "Total Mobilization Payment" bid item.

Partial payments of the "Initial Mobilization Payout" shall be as follows:

A. Upon presentation of a paid invoice for the Payment Bond, Performance Bond and/or required insurance, the Contractor will be paid that cost from the amount bid for "Total Mobilization Payment".

B. The Mobilization of tunnel boring machines, batch plants or other similar facilities, along with supporting materials and equipment, to the work site or to the vicinity of the Work site will be considered as partial Mobilization under this contract. The Contractor shall provide a certified statement of the Contractor's

expenditure for the Mobilization and setup of the facility and supporting equipment. Upon approval by the Engineer or designated representative, the certified expenditure will be paid from the amount bid for the Specification Item, “Total Mobilization Payment”. In no case shall the combined amount for all of these facilities be more than 10 percent of the Mobilization “Total Mobilization Payment" lump sum bid or one (1) percent of the total contract amount, whichever is less.

C. When one (1) percent of the adjusted contract amount is earned, 50 percent of the "Initial Mobilization Payout” will be paid. Previous payments under this item will be deducted from this amount.

D. When five (5) percent of the adjusted contract amount is earned, seventy-five (75) of the "Initial Mobilization Payout” will be paid. Previous payments under this item will be deducted from this amount.

E. When ten (10) percent of the adjusted contract amount is earned, one hundred (100) percent of the "Initial Mobilization Payout” will be paid. Previous payments under this item will be deducted from this amount.

F. Payment for the remainder of Pay Item No. 700S-TM, “Total Mobilization Payment” will be made upon receipt of the final pay estimate.

Payment will be made under:

Pay Item No. 700S-TM: **"**Total Mobilization Payment" Lump Sum

END

RELATED CROSS REFERENCE MATERIALS
Specification 700S, “MOBILIZATION”

City of Austin Standard Contract Documents

Designation	Description
00020	Invitation for Bids
00100	Instructions To Bidders
00300	Bid Form
00425	Insurance Cost Form
00500	Agreement
00610	Performance Bond
00620	Bid Bond
00650	Certificate of Insurance
00700	General Conditions
00810	Supplemental General Conditions
00820	Modifications to Bidding Requirements & Contract Forms
01010	Summary of Work
01300	Submittals
01500	Temporary Facilities
01550	Public Safety and Convenience
01700	Contract Closeout
01710	Final Cleaning

803S.1 Description

This item shall govern for providing, installing, moving, replacing, maintaining, cleaning and removing upon completion of the work, all temporary or permanent street closure barricades, signs, cones, lights or other devices required to handle the traffic in conformance with the current edition of the Texas Manual of Uniform Traffic Control Devices for Street and Highways and as indicated on the Drawings or directed by the Engineer or designated representative.

Constructing A Detour, if required, shall conform to Standard Specification Item No. 801S, " Constructing A Detour". Capital Improvement Project Signs shall conform to Standard Specification Item No. 802S, " Project Signs".

This item shall also include the installation of all required safety fencing as described in the latest adopted version of Standard Detail 804S-4.

This specification is applicable for projects or work involving either inch-pound or SI units. Within the text, the inch-pound units are given preference followed by SI units shown within parentheses.

803S.2 Submittals

The submittal requirements of this specification item include:

A. Type of Barricade and proposed materials and Construction of the barricade,

B. Test results for Retro-Reflective sheeting.

803S.3 Materials

All barricades, signs, cones, lights and other types of devices to handle traffic, as indicated on the Drawings or directed by the Engineer or designated representative, shall conform to details shown on the Drawings or those indicated in the Texas Manual on Uniform Traffic Control Devices (TMUTCD).

803S.4 Construction Methods

Prior to commencement of construction, suitable "Barricades, Signs and Traffic Handling" devices shall be installed to protect the workers and the public.

The Contractor shall be responsible for the installation of all markers, signs and barricades in accordance with the Drawings and in conformance with the Texas Manual on Uniform Traffic Control Devices (TMUTCD) and/or as indicated on the Drawings or directed by the Engineer or designated representative. If, in the opinion of the Engineer or designated representative, additional markers, signs or barricades are needed in the interest of safety, the Contractor will install such as are required or as directed by the Engineer or designated representative. All changes and/or revisions to the detour/traffic control plan shall be approved by the Engineer or designated representative.

Lumber shall be painted with 2 coats of paint as indicated on the Drawings.

803S.5 Maintenance

It shall be the Contractor's responsibility to maintain, clean, move and replace if necessary, barricades, signs and traffic handling devices during the time required for construction of the project. Permanent barricades shall be constructed as required after the completion of the street by drilling holes to place the posts and concrete foundations. Foundation concrete shall be cured before the rails are attached. When no longer needed, all temporary Barricades, Signs and Traffic Handling Devices shall be removed and the area restored to its original condition or as directed by the Engineer or designated representative.

803S.6 Measurement

The work performed and material furnished as prescribed by this item, City of Austin Standard Details, details included on the Drawings or indicated in the TMUTCD shall be measured as follows:

A. Pavement Markings.

   All pavement marking required for proper installation of the designated Traffic Control Plans and Details, as well as required removal of existing pavement marking, shall be measured and paid for under Standard Specification Item No. 870S, “Work Zone Pavement Markings” and Standard Specification Item No. 874S, “Eliminating Existing Pavement Markings”.

B. Barricades, Signs and Traffic Handling.

   All work performed and material furnished as prescribed by this item, City of Austin Standard Details, details shown on the Drawings or indicated in the TMUTCD, that are not included in the above paragraph, shall be measured by the number of calendar days, working days or months of actual service.

   Traffic control for the project will be measured and paid for once per contract defined time period, i.e. either per Calendar Day, Working day or Month at the contract rate, regardless of the number of set-ups, locations or streets under construction.

C. Safety Fencing

   Safety fencing will be measured by the lineal foot.

803S.7 Payment

The work performed and materials furnished as prescribed by this item, measured as provided under section “803S.6 Measurement” shall be paid for at the contract unit price for barricades, signs and traffic handling. This unit price shall include full compensation for furnishing, placement and removal of all materials and for all labor, tools, equipment, and incidentals necessary to complete the work.

Payment will be made under:

Pay Item No. 803S -CD:	Barricades, Signs, and Traffic Handling	Per Calendar Day.
Pay Item No. 803S-WD:	Barricades, Signs, and Traffic Handling	Per Working Day.
Pay Item No. 803S-MO:	Barricades, Signs, and Traffic Handling	Per Month.
Pay Item No. 803S-SF:	Safety Fence	Per Lineal Foot.

End

SPECIFIC CROSS REFERENCE MATERIALS
Specification Item No. 803S, "Barricades, Signs and Traffic Handling"

City of Austin Standard Specifications

Designation	Description
Item No. 801S	Constructing A Detour
Item No. 802S	Project Signs
Item No. 870S	Work Zone Pavement Markings
Item No. 874S	Eliminating Existing Pavement Markings and Markers

Texas Technical Documents:

Designation	Description
(TMUTCD)	Texas Manual on Uniform Traffic Control Devices

RELATED CROSS REFERENCE MATERIALS
Specification Item No. 803S, "Barricades, Signs and Traffic Handling"

City of Austin Standard Specifications

Designation	Description
Item No. 403S	Concrete for Structures
Item No. 860S	Pavement Marking Paint (Reflectorized)
Item No. 863S	Reflectorized Pavement Markers
Item No. 864S	Abbreviated Pavement Markings
Item No. 867S	Epoxy Adhesive
Item No. 871S	Reflectorized Pavement Markings
Item No. 875S	Pavement Surface Preparation For Markings

City of Austin Standard Details

Designation	Description
803S-1	Street-End Barricades

Texas Department of Transportation: Standard Specifications for Construction and Maintenance of Highways, Streets, and Bridges

Designation	Description
Item No. 502	Barricades, Signs and Traffic Handling
Item No. 508	Constructing Detours
Item No. 510	One-Way Traffic Control
Item No. 512	Portable Concrete Traffic Barrier
Item No. 514	Permanent Concrete Traffic Barrier
Item No. 662	Work Zone Pavement Markings
Item No. 666	Reflectorized Pavement Markings
Item No. 667	Prefabricated Pavement Markings
Item No. 672	Raised Pavement Markers
Item No. 677	Eliminating Existing Pavement Markings and Markers
Item No. 678	Pavement Surface Preparation For Markings

SPECIAL SPECIFICATION
SS520
WATER SERVICES

SS520.1 Description

This item shall govern (1) the replacement of an existing water service with HDPE or copper tubing and (2) connection of the new water service to an existing corporation, connection of a new meter yoke to the existing meter, and resetting the meter box following water service line replacement.

SS520.2 Materials

A. Pipe and fittings: shall conform to Item No. 510, Pipe.

SS520.3 Construction Methods

A. General

1. Replace all valves, fittings, and other appurtenances as needed to complete the Work. The existing corporation on the main line may be utilized for the new service. All replaced services shall conform to details 520S-9, 520S-9B, 520S-11, and 520S-11B.
2. The existing meterbox shall be reset in the same location after service replacement has been completed. Restoration of sod, in accordance with Item 602S, shall be subsidiary to this Item. In the event that the existing meterbox is damaged prior to construction, the Contractor shall install a new meterbox at the inspector's request at no additional payment. New meterboxes will be furnished by the City.
3. Permanent pavement repair shall conform to detail 1100S-2 and will be paid for according to bid items 210S-A and 340S-A. See detail 430S-4 for backfill under curbs or curb replacement.
4. Environmental Controls: Contractor shall provide adequate controls to prevent run-off of silt or erosion. Sediment containment dikes shall be installed where needed as directed by Owner.
5. Testing: All connections shall be free of leaks or other defects.

SS520.4 Measurement

1. Replacement of water services will be measured as per linear foot replaced (measured horizontally), complete and in place, from the corporation on the main to the meterbox.
2. Reconnection of water services will be measured as per each replaced, complete and in place.

SS520.5 Payment

1. Payment for water services will be made at the unit price bid per linear foot. Sodding and erosion/sedimentation controls, with the exception of sediment containment dikes, are subsidiary to this Item and will not be paid for separately. In the event contractor locates an existing copper service and/or City inspector deems that the existing service does not need to be replaced, payment to Contractor will be made via Pay Item SS520S-I only.

2. Payment for service reconnections will be made at the unit price bid per each. Sodding and erosion/sedimentation controls, with the exception of sediment containment dikes, are subsidiary to this Item and will not be paid for separately.

Payment for installation and connections of new water service pipe will be made at the appropriate unit bid price. The unit bid price shall include all labor, equipment, materials, time and incidentals to complete the Work.

Pay Item No. SS520-A:	Install 1.5” HDPE tubing to replace 1.5” service, trenchless	Per LF
Pay Item No. SS520-B:	Install 1” HDPE tubing to replace 1” service, trenchless	Per LF
Pay Item No. SS520-C:	Install 1.5” HDPE tubing to replace 1.5” service, open cut	Per LF
Pay Item No. SS520-D:	Install 1” HDPE tubing to replace 1” service, open cut	Per LF
Pay Item No. SS520-E:	Install 1.5” copper tubing to replace 1.5” service, trenchless	Per LF
Pay Item No. SS520-F:	Install 1” copper tubing to replace 1” service, trenchless	Per LF
Pay Item No. SS520-G:	Install 1.5” copper tubing to replace 1.5” service, open cut	Per LF
Pay Item No. SS520-H:	Install 1” copper tubing to replace 1” service, open cut	Per LF
Pay Item No. SS520-I:	Locate existing copper service	Per Each
Pay Item No. SS520-J:	Reconnect single water service	Per Each
Pay Item No. SS520-K:	Reconnect double water service	Per Each

End

City of Austin

Standard Details

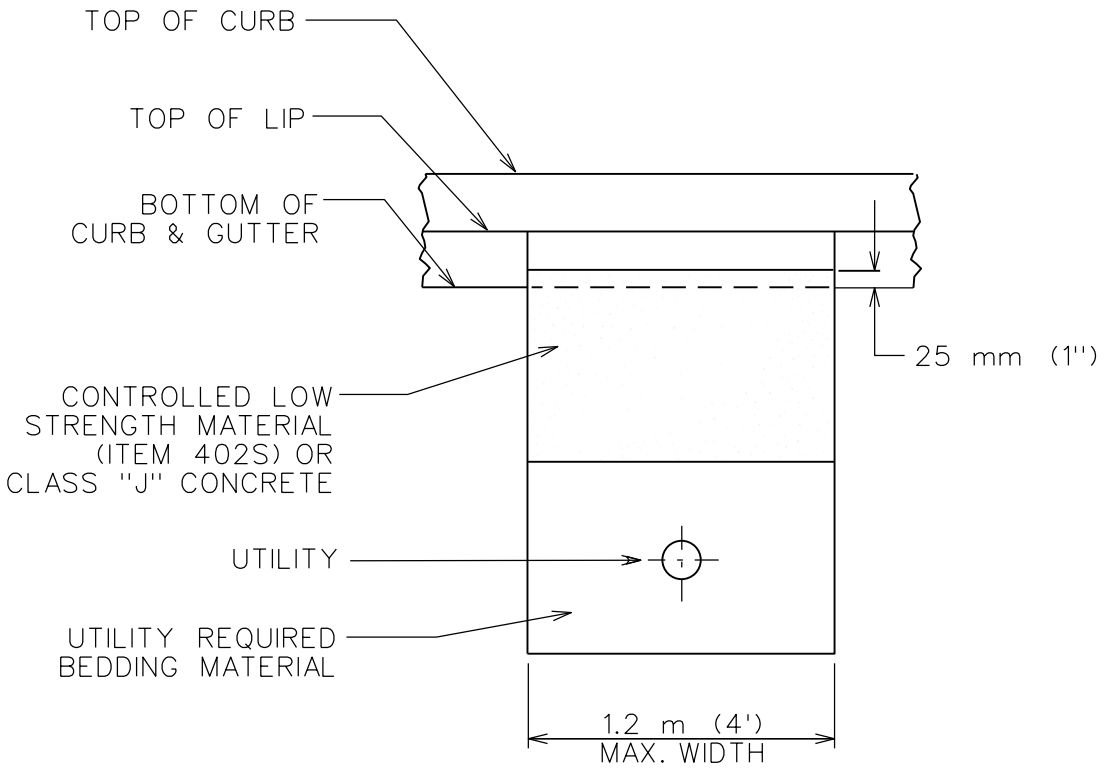

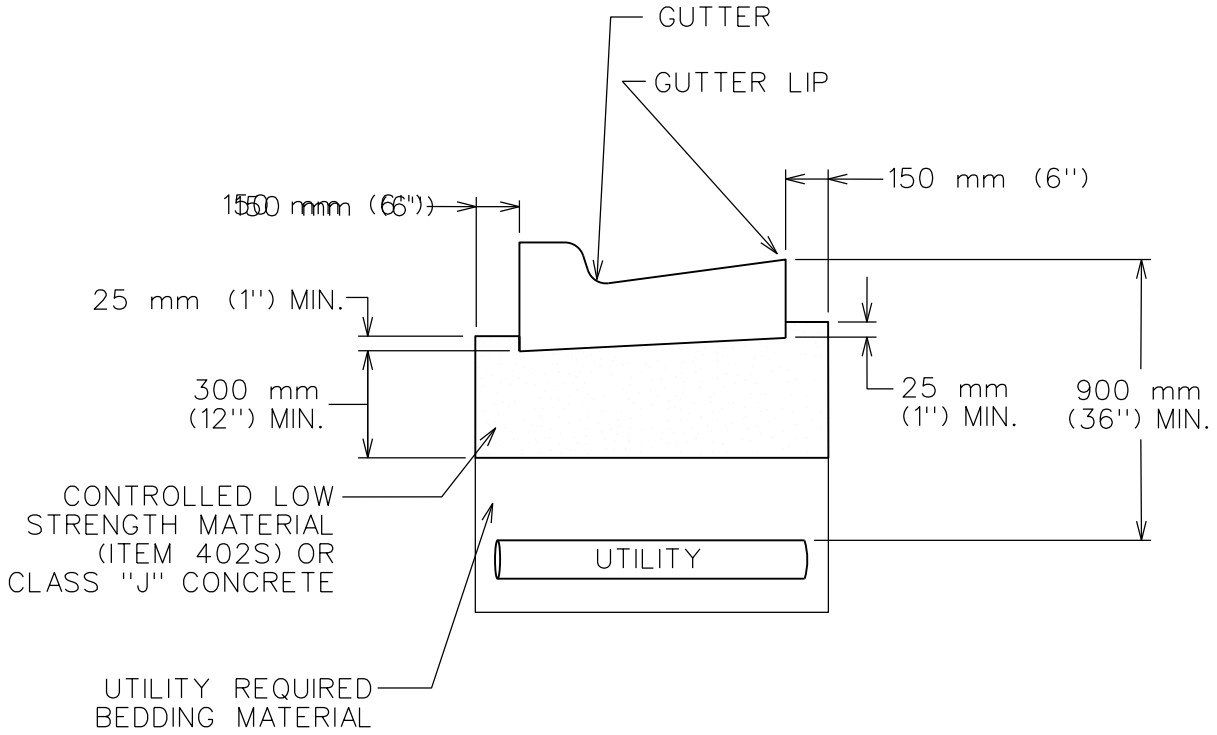

CITY OF AUSTIN DEPARTMENT OF PUBLIC WORKS		CONCRETE BACKFILL UNDER CURB & GUTTER	
RECORD COPY SIGNED BY LINO RIVERA	*9/29/99* ADOPTED	THE ARCHITECT/ENGINEER ASSUMES RESPONSIBILITY FOR APPROPRIATE USE OF THIS STANDARD.	STANDARD NO. 430S-4

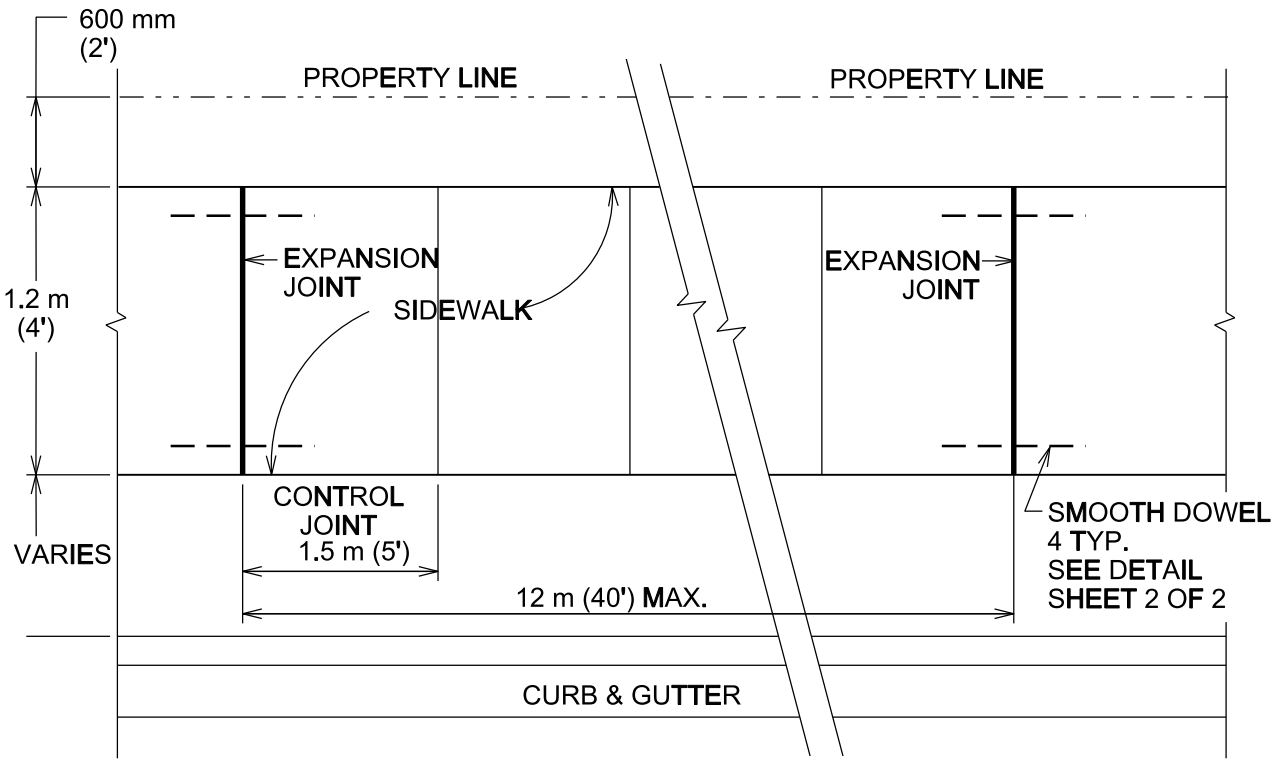

PLAN

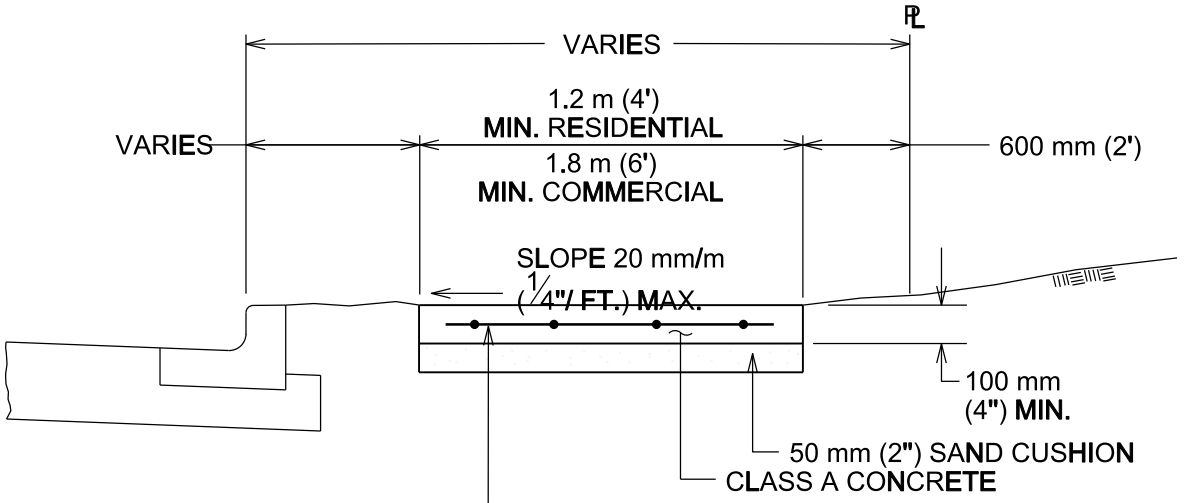

POLYPROPYLENE FIBRILLATED FIBERS, OR
150 mm X 150 mm X MW9 X MW9
(6" X 6" X W1.4 X W1.4) WELDED WIRE FABRIC
OR ONE LAYER 10M (#3) BARS PLACED NOT
MORE THAN 450 mm (18") C.C. BOTH
DIRECTIONS.
REINFORCEMENT SHALL ACCURATELY PLACED AT
SLAB MID-DEPTH AND HELD FIRMLY IN PLACE BY
MEANS OF BAR SUPPORTS OF ADEQUATE
STRENGTH AND NUMBER THAT WILL PREVENT
DISPLACEMENT AND KEEP THE STEEL AT ITS
PROPER POSITION DURING THE PLACEMENT OF
THE P.C. CONCRETE. IN NO INSTANCE SHALL THE
STEEL BE PLACED DIRECTLY ON THE SUBGRADE
OR SAND CUSHION LAYER.

SECTION

CITY OF AUSTIN DEPARTMENT OF PUBLIC WORKS		SIDEWALK	
RECORD COPY SIGNED BY BILL GARDNER	03/26/08 ADOPTED	THE ARCHITECT/ENGINEER ASSUMES RESPONSIBILITY FOR APPROPRIATE USE OF THIS STANDARD.	STANDARD NO. 432S-1 1 OF 3

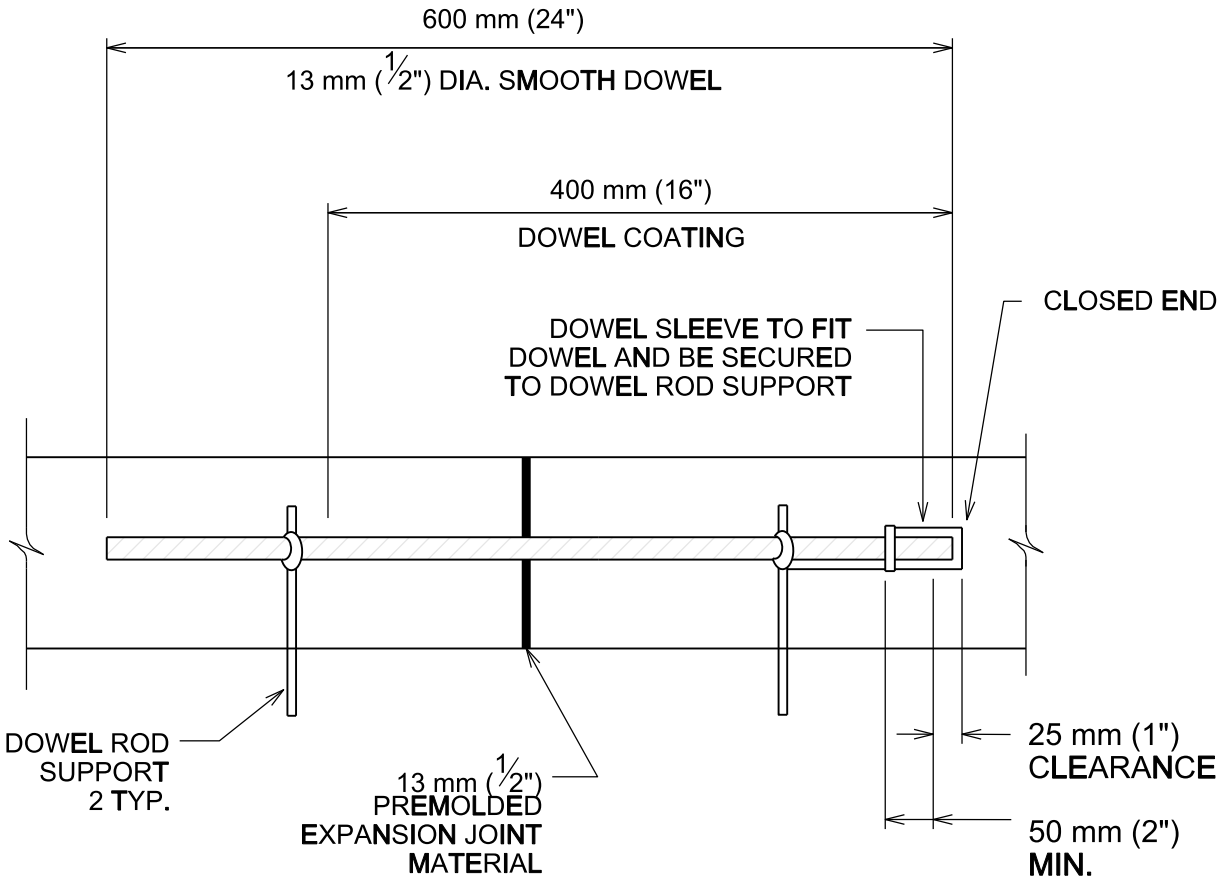

DOWEL DETAIL

CITY OF AUSTIN DEPARTMENT OF PUBLIC WORKS		SIDEWALK	
RECORD COPY SIGNED BY BILL GARDNER	03/26/08 ADOPTED	THE ARCHITECT/ENGINEER ASSUMES RESPONSIBILITY FOR APPROPRIATE USE OF THIS STANDARD.	STANDARD NO. 432S-1 2 OF 3

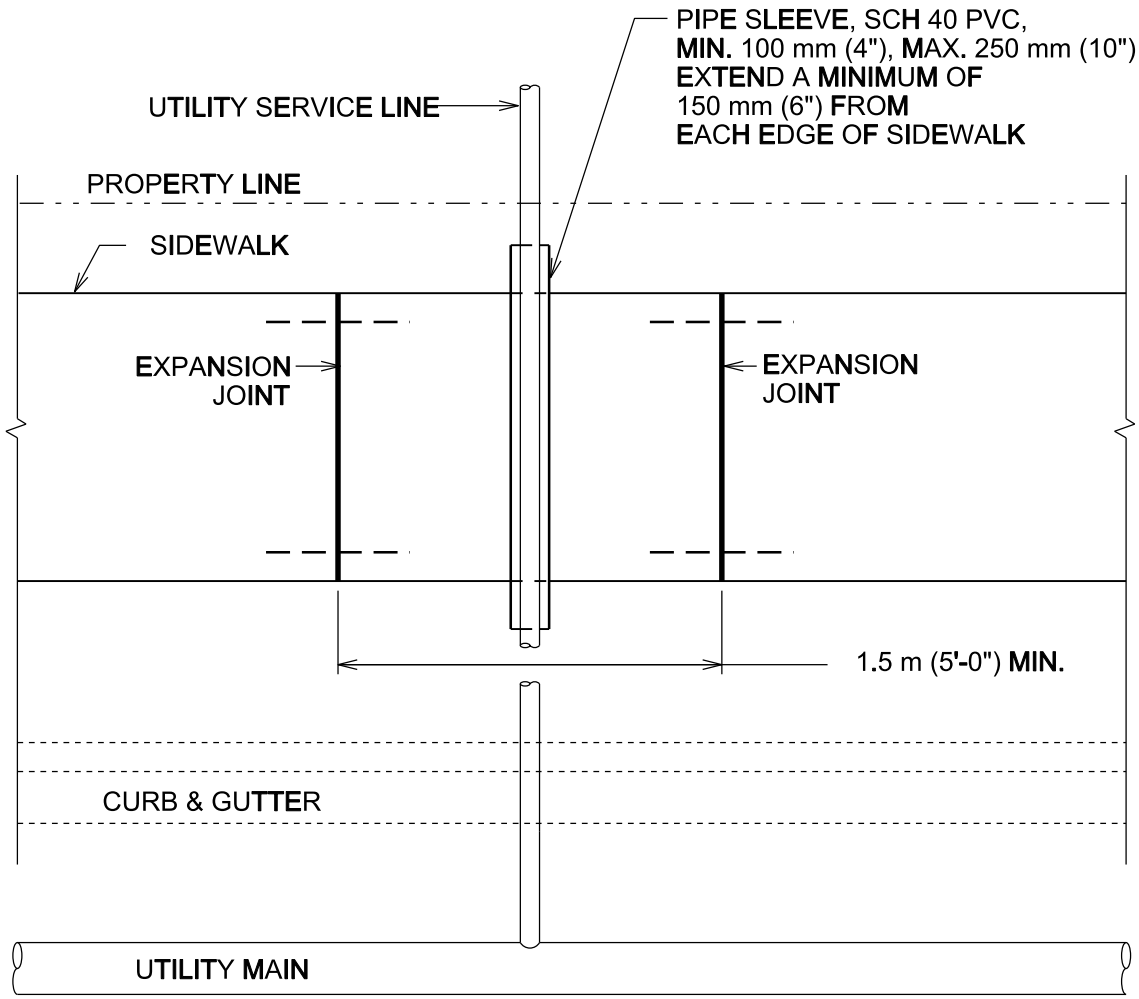

SIDEWALK OVER UTILITY SERVICE LINE PLAN

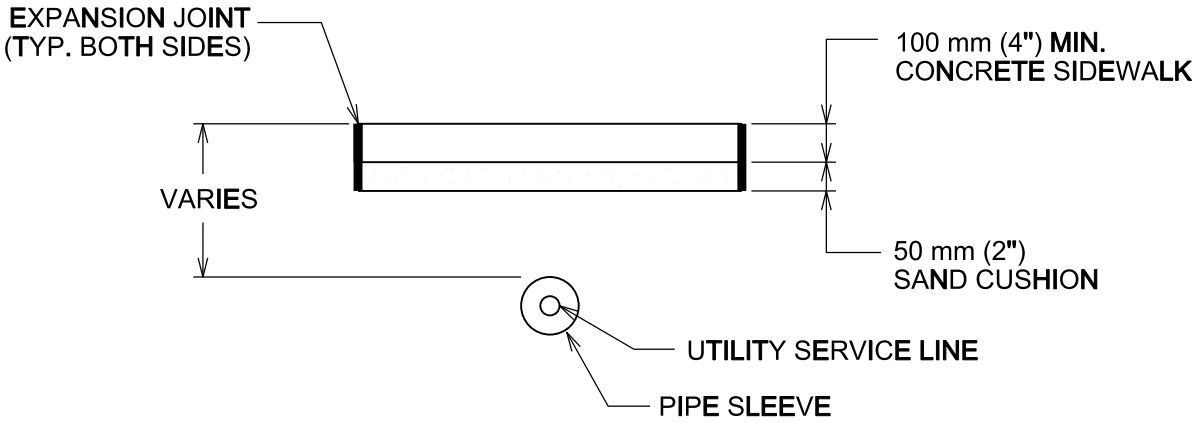

SECTION OF SIDEWALK OVER
UTILITY SERVICE LINES

NOTES:
1. THIS STANDARD APPLIES TO THE INSTALLATION OF NEW UTILITIES OR UTILITIES BEING REPLACED BY A NEW LINE.
2. NO JOINTS IN UTILITY SERVICE PIPE TO BE LOCATED INSIDE PVC PIPE SLEEVE.

CITY OF AUSTIN DEPARTMENT OF PUBLIC WORKS		SIDEWALK	
RECORD COPY SIGNED BY BILL GARDNER	03/26/08 ADOPTED	THE ARCHITECT/ENGINEER ASSUMES RESPONSIBILITY FOR APPROPRIATE USE OF THIS STANDARD.	STANDARD NO. 432S-1 3 OF 3

USE ON LOT WIDTHS RANGING
FROM 50 FEET TO 25 FEET

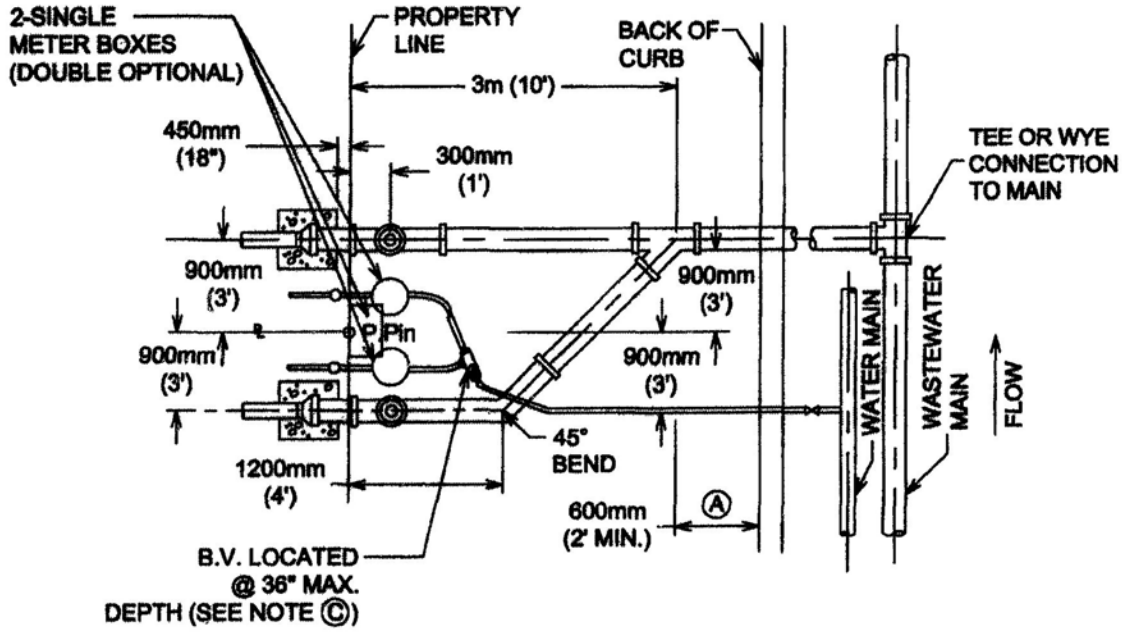

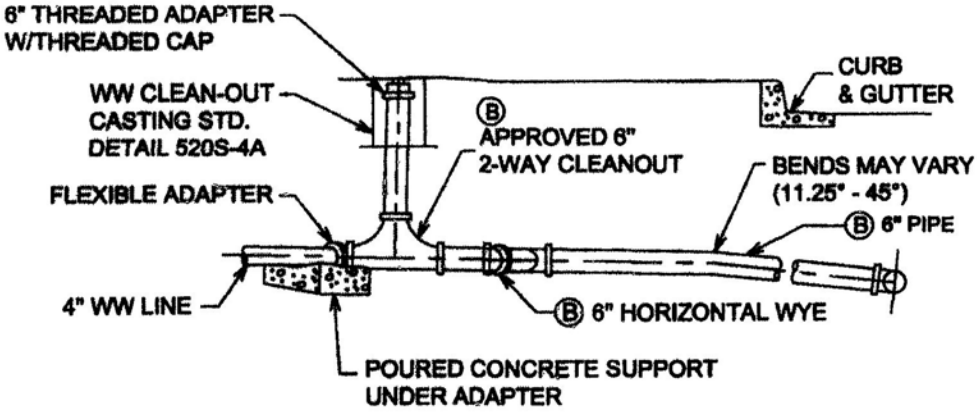

A THESE DIMENSIONS MAY BE INCREASED BY WIDTH OF WALK IF WALK IS LOCATED AT CURB.
B TO BE INSTALLED AND INSPECTED DURING SUBDIVISION CONSTRUCTION.
C BALL VALVE SHALL NOT BE LOCATED UNDER CURB OR PAVEMENT, AND NOT LOCATED MORE THAN 24" HORIZONTALLY FROM METER BOX.

CITY OF AUSTIN AUSTIN WATER UTILITY	MODIFIED WATER SERVICE & WASTEWATER SERVICE CONNECTION DETAIL	
Kathi L Flowers 8/31/2011	THE ARCHITECT/ENGINEER ASSUMES RESPONSIBILITY FOR APPROPRIATE USE OF THIS STANDARD.	STANDARD NO. 520S-1A 1 OF 2

NOTES:

1. DURING SUBDIVISION CONSTRUCTION UTILITY CONTRACTOR INSTALLS WASTEWATER CONNECTION TO MAIN, 150mm (6") STUB WITH HORIZONTAL WYE FOR DOUBLE SERVICES, 150mm (6") SERVICE BRANCH WITH 2-WAY-CLEANOUT(S) AND RISER FOR CLEANOUT(S) (CAPPED), AND PLUG(S) FOR 2-WAY-CLEANOUT(S) AT PROPERTY LINE END. ALL WASTEWATER PIPING SHALL HAVE ELASTOMERIC GASKET TYPE JOINTS AND SLOPE DOWNWARD TO MAIN 1% MINIMUM TO 45° MAXIMUM. DEPTH OF SERVICE STUB AT PROPERTY LINE WILL BE SHOWN ON PLANS BY ENGINEER IF GREATER THAN 1.22m (4'), OTHERWISE THE INSTALLED DEPTH WILL TYPICALLY BE 1.22m (4') TO 1.8m (6'). IF WASTEWATER SERVICE LINE TO MAIN REQUIRES DEFLECTION EXCEEDING 45°, REFER TO DETAIL 520-6. UTILITY CONTRACTOR ALSO INSTALLS WATER CONNECTION TO MAIN WATER PIPE, FITTINGS AND VALVES INCLUDING STOP VALVE-REFER TO DETAIL 520S-9, 9A, 11 AND 11A FOR LOCATION OF STOP VALVES. ALL INSTALLATIONS SHALL BE MADE IN ACCORDANCE WITH INFORMATION SHOWN ON APPLICABLE STANDARD DRAWINGS AND WILL BE INSPECTED BY CITY OF AUSTIN CONSTRUCTION INSPECTION PERSONNEL.
2. CUSTOMER REMOVES PLUG FROM 2-WAY CLEAN-OUT AT PROPERTY LINE, INSTALLS 150mm x 100mm (6"x4") ELASTOMERIC GASKETED BELL REDUCER (SPL WW-227-B). A BUSHING WILL NOT BE ALLOWED. AS AN ALTERNATE, CUSTOMER MAY INSTALL MINIMUM 450mm (18") LENGTH OF 150mm (6") PIPE, INSTALL 100mm (4") WASTEWATER LINES, EXTEND 100mm (4") PIPE 150mm (6") MINIMUM INTO 150mm (6") PIPE AND JOINT BLOCK UNDER THE FLEXIBLE ADAPTER (SPL WW-354) AND CAST IN PLACE CONCRETE SUPPORT BLOCK UNDER THE FLEXIBLE ADAPTER. IF WASTEWATER WILL NOT SATISFACTORILY FLOW BY GRAVITY TO SEWER MAIN ADJACENT TO PROPERTY, PUMP EQUIPMENT MUST BE PROVIDED BY THE CUSTOMER AS PART OF THE CUSTOMER'S WASTEWATER SYSTEM. CUSTOMER ALSO INSTALLS WATER LINES INCLUDING FITTINGS AND VALVES ON BOTH SIDES OF METER, AND INSTALLS METER BOXES AND COVERS. A VENTED SPACER MAY BE USED TO ASSURE PROPER SPACING AND ALIGNMENT OF METER FITTINGS.
3. IF EXISTING WASTEWATER SERVICE IS 100mm (4"), CUSTOMER SHALL INSTALL A 100mm (4") 2-WAY-CLEAN-OUT, SEE SPL WW-227B.
4. IF EXISTING SERVICE IS NOT PVC, THE CUSTOMER SHALL INSTALL A FLEXIBLE ADAPTER (SPL WW-354) AND CAST IN PLACE CONCRETE SUPPORT BLOCK UNDER THE ADAPTER TO TRANSITION TO PVC. THE SUPPORT BLOCK SHALL HAVE MINIMUM DIMENSIONS OF 150mm (6") THICK AND 450mm (18") WIDE AND EXTEND A MINIMUM OF 150mm (6") BEYOND EITHER END OF THE ADAPTER.
5. CUSTOMER IS RESPONSIBLE FOR METER BOX AND PIPING SYSTEM UNTIL METER IS INSTALLED AND WASTEWATER IS CONNECTED. ANY MISSING OR DAMAGED PARTS SHALL BE REINSTALLED BY CUSTOMER WHO SHALL GUARANTEE, FOR A PERIOD OF ONE (1) YEAR FROM DATE OF ACCEPTANCE, THAT ALL VALVES AND STOPS, METER BOX AND 2-WAY-CLEANOUTS REMAIN CLEAR OF SIDEWALKS AND OTHER OBSTRUCTIONS.
6. CITY OF AUSTIN ACTIVITY IS LIMITED TO INSTALLATION OF THE WATER METER AND INSPECTION OF CONNECTIONS TO THE CITY'S RESPONSIBILITY ENDS AT THE CUSTOMER'S WATER CUT-OFF VALVE AND AT THE CUSTOMER'S WASTEWATER CONNECTION TO THE 2-WAY CLEAN-OUT.
7. PIPING AND TUBING IN STREET RIGHT-OF-WAY AND IN EASEMENT AREA SHALL BE BEDDED IN GRANULAR MATERIALS AS REQUIRED BY CITY OF AUSTIN STANDARD SPECIFICATION 510.3 (14); MATERIALS SHALL BE AS SPECIFIED IN 510.2 (2)(A) AND (3)(B); BACKFILL ABOVE THE GRANULAR BEDDING SHALL BE AS REQUIRED BY SECTION 510.3 (25). SERVICE LINES IN THESE AREAS SHALL HAVE A MINIMUM COVER BELOW FINAL STREET GRADE OF 1.07m (42"). ANY EXCEPTION MUST BE SPECIFICALLY APPROVED BY THE ENGINEER.
8. NO METER BOX OR CLEAN-OUT SHALL BE SET IN SIDEWALK OR DRIVEWAY AREA WITHOUT WRITTEN APPROVAL FROM AUSTIN WATER UTILITY.
9. ALL WW JOINTS THAT ARE NOT PVC OR A COMBINATION OF NON-PVC WITH PVC SHALL BE ENCASED IN CONCRETE OR CLSM.

CITY OF AUSTIN AUSTIN WATER UTILITY	MODIFIED WATER SERVICE & WASTEWATER SERVICE CONNECTION DETAIL	
Kathleen L Flowers 8/31/2011	THE ARCHITECT/ENGINEER ASSUMES RESPONSIBILITY FOR APPROPRIATE USE OF THIS STANDARD.	STANDARD NO. 520S-1A 2 OF 2

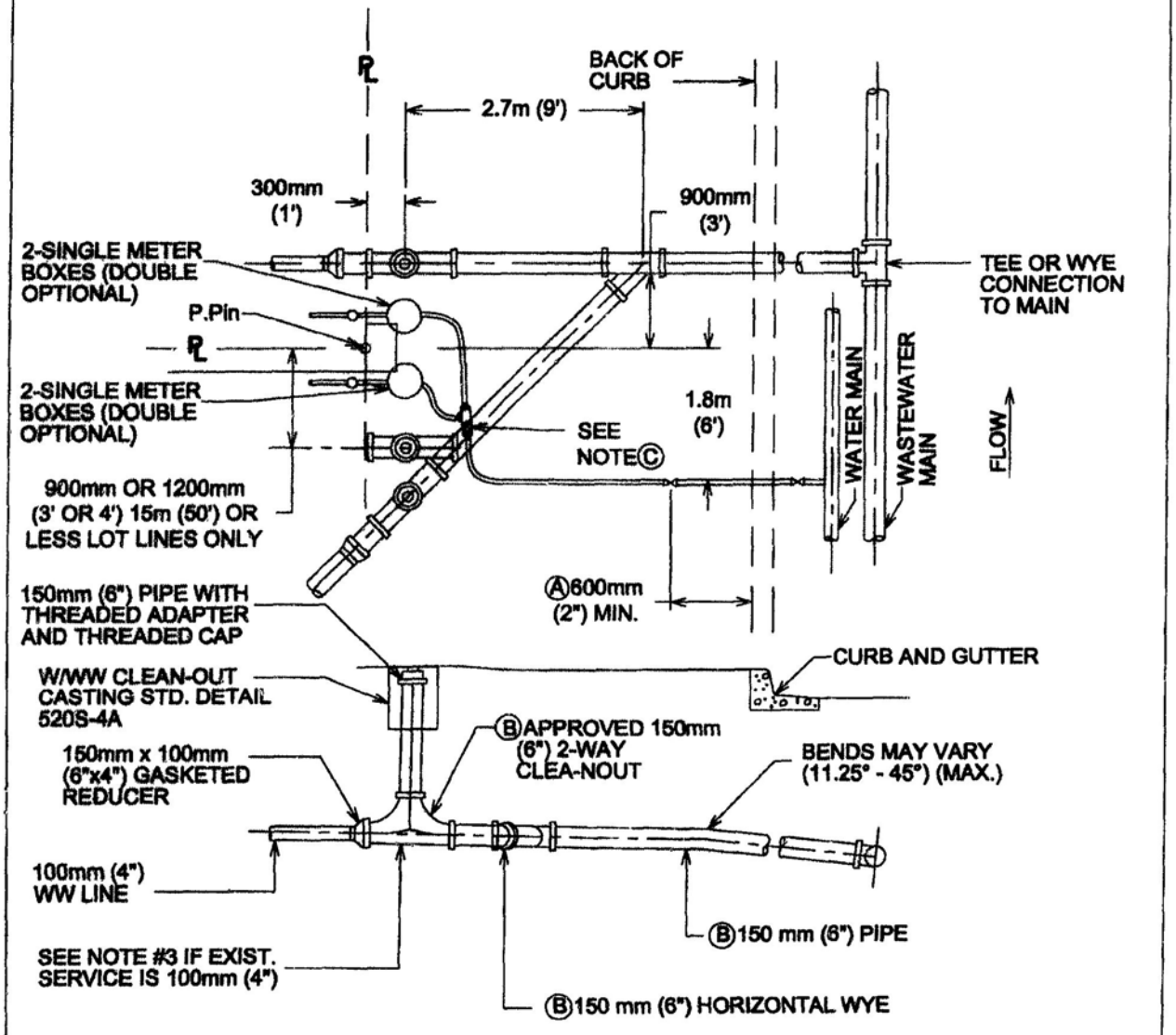

Ⓐ THESE DIMENSIONS MAY BE INCREASED BY WIDTH OF WALK IF WALK IS LOCATED AT CURB.

Ⓑ TO BE INSTALLED AND INSPECTED DURING SUBDIVISION CONSTRUCTION.

Ⓒ BALL VALVE SHALL NOT BE LOCATED UNDER CURB OR PAVEMENT, AND NOT BE LOCATED MORE THAN 24" HORIZONTALLY FROM METER BOX.

CITY OF AUSTIN AUSTIN WATER UTILITY	DOUBLE WATER/WASTEWATER SERVICE CONNECTION DETAIL	
Kathi L Flowers 2/24/2011	THE ARCHITECT/ENGINEER ASSUMES RESPONSIBILITY FOR APPROPRIATE USE OF THIS STANDARD.	STANDARD NO. 520S-3 1 OF 2

NOTES:

1. DURING SUBDIVISION CONSTRUCTION UTILITY CONTRACTOR INSTALLS WASTEWATER CONNECTION TO MAIN, 150mm (6") STUB WITH HORIZONTAL WYE FOR DOUBLE SERVICES, 150mm (6") SERVICE BRANCH WITH 2-WAY-CLEANOUT(S) AND RISER FOR CLEANOUT(S) (CAPPED), AND PLUG(S) FOR 2-WAY-CLEANOUT(S) AT PROPERTY LINE END. ALL WASTEWATER PIPING SHALL HAVE ELASTOMERIC GASKET TYPE JOINTS AND SLOPE DOWNWARD TO MAIN 1% MINIMUM TO 45° MAXIMUM. DEPTH OF SERVICE STUB AT PROPERTY LINE WILL BE SHOWN ON PLANS BY ENGINEER IF GREATER THAN 1.22m (4'), OTHERWISE THE INSTALLED DEPTH WILL TYPICALLY BE 1.22m (4') TO 1.8m (6'). IF WASTEWATER SERVICE LINE TO MAIN REQUIRES DEFLECTION EXCEEDING 45°, REFER TO DETAIL 520-6. UTILITY CONTRACTOR ALSO INSTALLS WATER CONNECTION TO MAIN WATER PIPE, FITTINGS AND VALVES INCLUDING STOP VALVE-REFER TO DETAIL 520S-9, 9A, 11 AND 11A FOR LOCATION OF STOP VALVES. ALL INSTALLATIONS SHALL BE MADE IN ACCORDANCE WITH INFORMATION SHOWN ON APPLICABLE STANDARD DRAWINGS AND WILL BE INSPECTED BY CITY OF AUSTIN CONSTRUCTION INSPECTION PERSONNEL.
2. CUSTOMER REMOVES PLUG FROM 2-WAY CLEAN-OUT AT PROPERTY LINE, INSTALLS 150mm x 100mm (6"x4") ELASTOMERIC GASKETED BELL REDUCER (SPL WW-227-B). A BUSHING WILL NOT BE ALLOWED. AS AN ALTERNATE, CUSTOMER MAY INSTALL MINIMUM 450mm (18") LENGTH OF 150mm (6") PIPE, INSTALL 100mm (4") WASTEWATER LINES, EXTEND 100mm (4") PIPE 150mm (6") MINIMUM INTO 150mm (6") PIPE AND JOINT BLOCK UNDER THE FLEXIBLE ADAPTER (SPL WW-354) AND CAST IN PLACE CONCRETE SUPPORT BLOCK UNDER THE FLEXIBLE ADAPTER. IF WASTEWATER WILL NOT SATISFACTORILY FLOW BY GRAVITY TO SEWER MAIN ADJACENT TO PROPERTY, PUMP EQUIPMENT MUST BE PROVIDED BY THE CUSTOMER AS PART OF THE CUSTOMER'S WASTEWATER SYSTEM. CUSTOMER ALSO INSTALLS WATER LINES INCLUDING FITTINGS AND VALVES ON BOTH SIDES OF METER, AND INSTALLS METER BOXES AND COVERS. A VENTED SPACER MAY BE USED TO ASSURE PROPER SPACING AND ALIGNMENT OF METER FITTINGS.
3. IF EXISTING WASTEWATER SERVICE IS 100mm (4"), CUSTOMER SHALL INSTALL A 100mm (4") 2-WAY CLEAN-OUT. SEE SPL WW-227B.
4. IF EXISTING SERVICE IS NOT PVC, THE CUSTOMER SHALL INSTALL A FLEXIBLE ADAPTER (SPL WW-354) AND CAST IN PLACE CONCRETE SUPPORT BLOCK UNDER THE ADAPTER TO TRANSITION TO PVC. THE SUPPORT BLOCK SHALL HAVE MINIMUM DIMENSIONS OF 150mm (6") THICK AND 450mm (18") WIDE AND EXTEND A MINIMUM OF 150mm (6") BEYOND EITHER END OF THE ADAPTER.
5. CUSTOMER IS RESPONSIBLE FOR METER BOX AND PIPING SYSTEM UNTIL METER IS INSTALLED AND WASTEWATER IS CONNECTED. ANY MISSING OR DAMAGED PARTS SHALL BE REINSTALLED BY CUSTOMER WHO SHALL GUARANTEE, FOR A PERIOD OF ONE (1) YEAR FROM DATE OF ACCEPTANCE, THAT ALL VALVES AND STOPS, METER BOX AND 2-WAY-CLEANOUTS REMAIN CLEAR OF SIDEWALKS AND OTHER OBSTRUCTIONS.
6. CITY OF AUSTIN ACTIVITY IS LIMITED TO INSTALLATION OF THE WATER METER AND INSPECTION OF CONNECTIONS TO THE CITY'S RESPONSIBILITY ENDS AT THE CUSTOMER'S WATER CUT-OFF VALVE AND AT THE CUSTOMER'S WASTEWATER CONNECTION TO THE 2-WAY CLEAN-OUT.
7. PIPING AND TUBING IN STREET RIGHT-OF-WAY AND IN EASEMENT AREA SHALL BE BEDDED IN GRANULAR MATERIALS AS REQUIRED BY CITY OF AUSTIN STANDARD SPECIFICATION 510.3 (14); MATERIALS SHALL BE AS SPECIFIED IN 510.2 (2)(A) AND (3)(B); BACKFILL ABOVE THE GRANULAR BEDDING SHALL BE AS REQUIRED BY SECTION 510.3 (25). SERVICE LINES IN THESE AREAS SHALL HAVE A MINIMUM COVER BELOW FINAL STREET GRADE OF 1.07m (42"). ANY EXCEPTION MUST BE SPECIFICALLY APPROVED BY THE ENGINEER.
8. NO METER BOX OR CLEAN-OUT SHALL BE SET IN SIDEWALK OR DRIVEWAY AREA WITHOUT WRITTEN APPROVAL FROM AUSTIN WATER UTILITY.
9. ALL WW JOINTS THAT ARE NOT PVC OR A COMBINATION OF NON-PVC WITH PVC SHALL BE ENCASED IN CONCRETE OR CLSM.

CITY OF AUSTIN AUSTIN WATER UTILITY	DOUBLE WATER/WASTEWATER SERVICE CONNECTION DETAIL	
Kathie L Flowers 8/31/2011	THE ARCHITECT/ENGINEER ASSUMES RESPONSIBILITY FOR APPROPRIATE USE OF THIS STANDARD.	STANDARD NO. 520S-3 2 OF 2

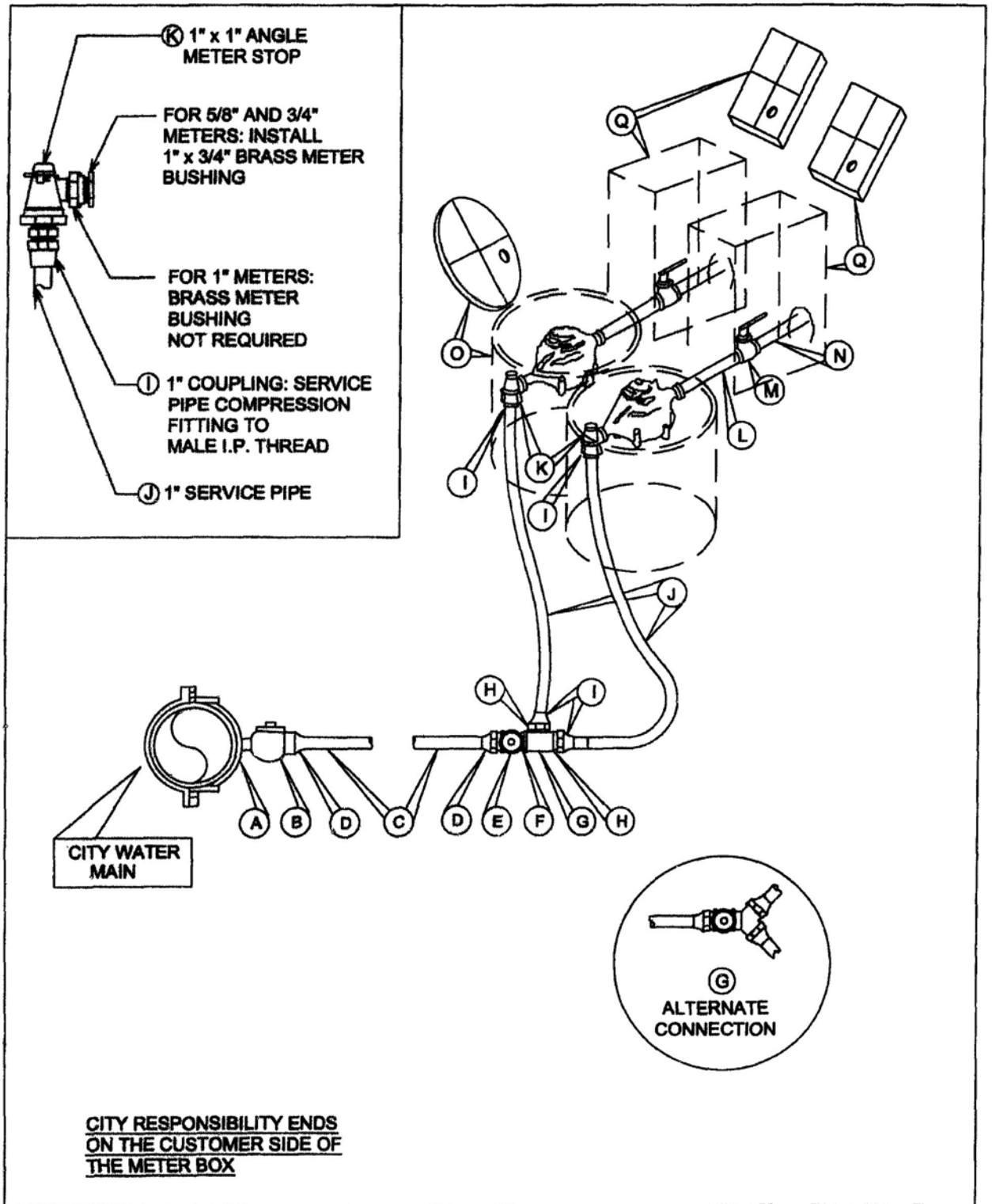

CITY RESPONSIBILITY ENDS ON THE CUSTOMER SIDE OF THE METER BOX

CITY OF AUSTIN AUSTIN WATER UTILITY	INSTALLATION DETAIL FOR TWO 16mm (5/8"), 19mm (3/4") & 25mm (1") METERS	
Kathi L Flowers 8/31/2011	THE ARCHITECT/ENGINEER ASSUMES RESPONSIBILITY FOR APPROPRIATE USE OF THIS STANDARD.	STANDARD NO. 520S-9 1 OF 2

MATERIAL LIST

Ⓐ SERVICE CLAMP REQUIRED ON ALL PLASTIC AND ASBESTOS CEMENT PIPE AND ON ALL IRON PIPE 300mm (12") AND SMALLER.

Ⓑ 38mm (1-1/2") CORPORATION STOP-SERVICE PIPE OUTLET. SPL WW-68

Ⓒ 38mm (1-1/2") SERVICE PIPE

Ⓓ 38mm (1-1/2") COUPLING: SERVICE PIPE TO MALE I.P.T. (COMPRESSION FITTING)

Ⓔ 38mm (1-1/2") BALL VALVE. SEE SPL WW -275; SEE NOTE 8

Ⓕ 38mm (1-1/2") CLOSE NIPPLE. BRONZE I.P. THREAD

Ⓖ 38mm (1-1/2") BRONZE TEE. SPL WW-68 OR 38mm (1-1/2") BRONZE WYE SPL WW-68

Ⓗ BRONZE BUSHING, 38mm x 25mm (1-1/2"x1"), I.P. THREADS

Ⓘ 25mm (1") COUPLING: SERVICE PIPE TO MALE I.P. THREAD, COMPRESSION FITTING

Ⓙ 25mm (1") SERVICE PIPE

Ⓚ 25mm (1") ANGLE METER STOP; SERVICE PIPE INLET x SWIVEL COUPLING NUT OUTLET AND BRASS BUSHING:
-FOR 16mm AND 19mm (5/8" AND 3/4") METERS 25mm x19mm (1"x3/4") BRASS METER BUSHING
-FOR 25mm (1") METERS BRASS METER BUSHING NOT REQUIRED.
-FOR ALL, SEE SPL WW-68

Ⓛ WATER METER COUPLING: MALE I.P.T. x SWIVEL COUPLING NUT:
-FOR 16mm (5/8") AND 19mm (3/4") METERS: 19mm x 213mm (3/4"x8-1/2") LONG
-FOR 25mm (1") METERS: 25mm x 213mm (1"x8-1/2") LONG

Ⓜ 25mm (1") BALL VALVE. SEE SPL WW-276

Ⓝ 25mm (1") PIPE MEETING CITY OF AUSTIN PLUMBING CODE REQUIREMENTS

Ⓞ AMR/AMI READY METER BOX AND LID PER STANDARD PRODUCTS LIST: SPL WW-145 OR WW-145A

Ⓟ N/A

Ⓠ PROPERTY OWNERS BALL VALVE BOX AND LID, RECTANGULAR PLASTIC BOX, DFW #D1200 OR EQUAL

NOTES:

1. SERVICE PIPE SHALL BE COPPER TUBE SIZE. IT SHALL BE ANNEALED SEAMLESS TYPE "K" COPPER TUBING MEETING THE CURRENT ASTM B88 STANDARD WITH NO SWEAT OR SOLDERED JOINTS.
2. SERVICE SADDLE SHALL BE WRAPPED COMPLETELY WITH 0.2 mm (8 MIL) POLYETHYLENE FILM.
3. BRANCH CONNECTION AND BOTH ANGLE METER STOPS MUST BE INSTALLED PRIOR TO FIRST METER INSTALLATION EVEN THOUGH SECOND PROPERTY MAY NOT BE READY FOR SERVICE.
4. TOP OF BOXES SHOULD BE 25mm (1") ABOVE GROUND OR FLUSH WITH PAVEMENT SURFACE.
5. PIPING AND TUBING IN STREET RIGHT-OF-WAY SHALL BE BEDDED IN GRANULAR MATERIALS AS REQUIRED BY SECTION 510.3 (14) OF THE CITY OF AUSTIN STANDARD SPECIFICATIONS: BACKFILL ABOVE GRANULAR BEDDING AS REQUIRED BY SECTION 510.3 (25).
6. BOX MUST BE BEHIND CURB, NEXT TO PROPERTY LINE OR EASEMENT, AND OUT OF SIDEWALK AND VEHICULAR TRAFFIC AREA.
7. BALL VALVE Ⓔ SHALL NOT BE LOCATED MORE THAN 36" (914mm) BELOW METER OR MORE THAN 24" (610mm) HORIZONTALLY FROM METER. BALL VALVE Ⓔ MAY NOT BE LOCATED UNDER PAVING, SIDEWALK, OR DRIVEWAY.
8. A METER BOX IS REQUIRED FOR EACH 25mm (1") METER.

CITY OF AUSTIN AUSTIN WATER UTILITY	INSTALLATION DETAIL FOR TWO 16mm (5/8"), 19mm (3/4") & 25mm (1") METERS	
Kathi K Flowers 8/31/2011	THE ARCHITECT/ENGINEER ASSUMES RESPONSIBILITY FOR APPROPRIATE USE OF THIS STANDARD.	STANDARD NO. 520S-9 2 OF 2

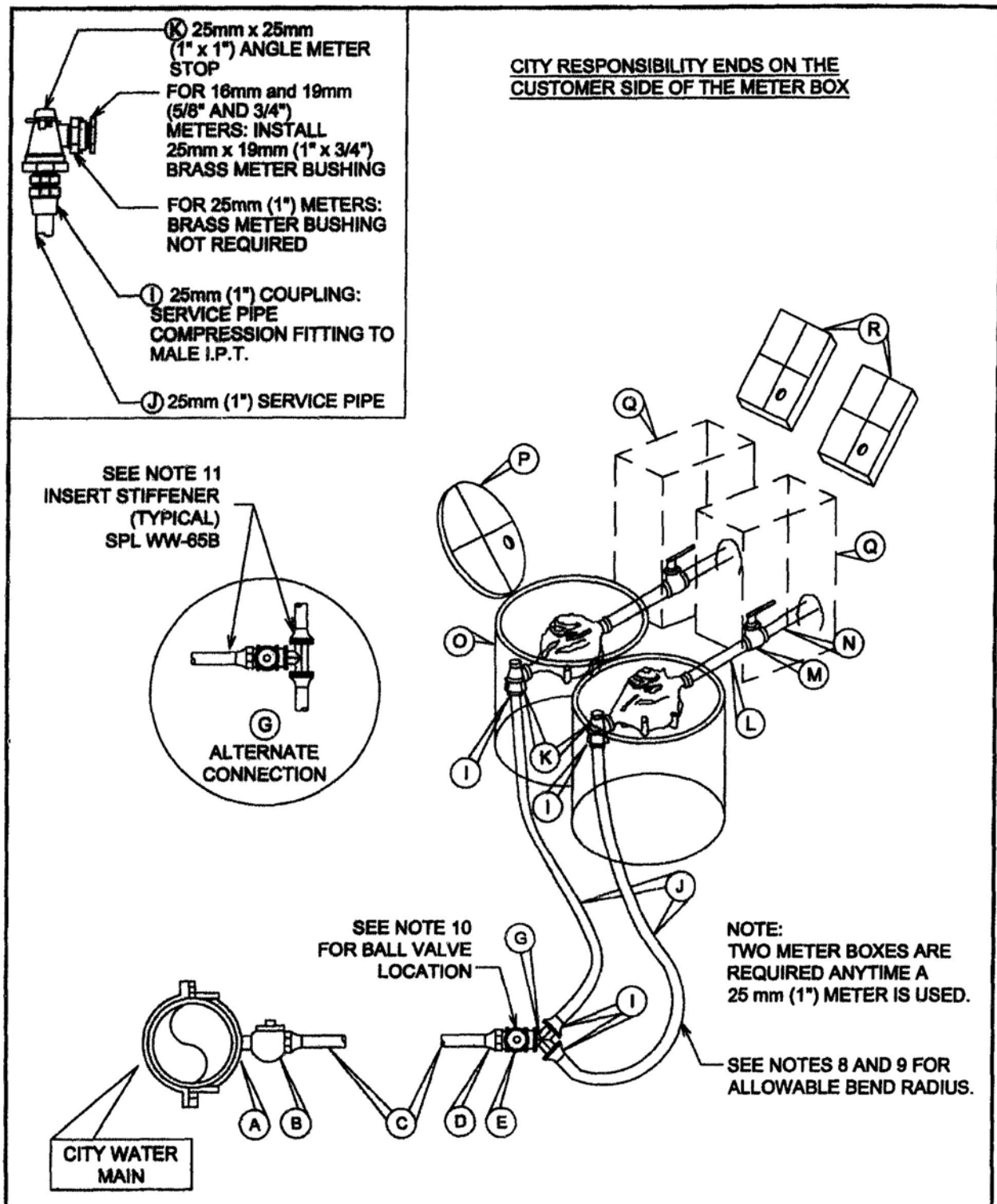

CITY OF AUSTIN AUSTIN WATER UTILITY	POTABLE HDPE DOUBLE SERVICE INSTALLATION & TWO 16mm, 19mm, OR 25mm (5/8", 3/4", OR 1") METERS
Kathi L Flowers 8/31/2011	THE ARCHITECT/ENGINEER ASSUMES RESPONSIBILITY FOR APPROPRIATE USE OF THIS STANDARD.
	STANDARD NO. 520S-9B 1 OF 3

MATERIAL LIST

Ⓐ SERVICE CLAMP REQUIRED ON ALL PLASTIC AND ASBESTOS CEMENT PIPE AND ON ALL IRON PIPE 300 mm (12") AND SMALLER.

Ⓑ 50mm (2") CORPORATION STOP-MALE THREAD INLET BY COMPRESSION OUTLET, SPL WW-68

Ⓒ 50mm (2") SERVICE TUBING PER SPL WW-65

Ⓓ COUPLING: 50mm (2") COMPRESSION TO 38mm (1-1/2") MALE I.P.T.

Ⓔ 38mm (1-1/2") BALL VALVE; SEE SPL WW-275 AND NOTE 10.

Ⓕ N/A

Ⓖ 38mm (1-1/2") x 25mm (1") BRONZE WYE. SPL WW-68 OR TEE (ALTERNATE CONNECTION)

Ⓗ N/A

Ⓘ 25mm (1") COUPLING: SERVICE TUBING TO MALE I.P.T. (COMPRESSION FITTING) W/STIFFENER PER SPL WW-65B

Ⓙ 25mm (1") SERVICE TUBING

Ⓚ 25mm (1") ANGLE METER STOP; SERVICE TUBING INLET x SWIVEL COUPLING NUT OUTLET, AND 25mm x 19mm (1" x 3/4") BRASS BUSHING. A 25mm x 19mm (1" x 3/4") METER BUSHING IS REQUIRED AT THE ANGLE STOP TO BE INSTALLED BY PLUMBER FOR ALL 16mm (5/8") AND 19mm (3/4") METERS. SPL WW-68

Ⓛ WATER METER COUPLING: MALE I.P.T. x SWIVEL COUPLING NUT:
-FOR 16mm AND 19mm (5/8" AND 3/4") METERS: 19mm x 213mm (3/4"x8-1/2") LONG
-FOR 25mm (1") METERS: 25mm x 213mm (1" x 8-1/2") LONG

Ⓜ CUSTOMER BALL VALVE 25mm (1") SEE SPL WW-276.

Ⓝ 25mm (1") TUBING MEETING CITY OF AUSTIN PLUMBING CODE REQUIREMENTS

Ⓞ METER BOX PER SPL WW-145 OR WW-145A

Ⓟ AMR/AMI READY LID-FOR METER BOX FURNISHED WITH APPROVED BOX.

Ⓠ RECTANGULAR BOX FOR CUSTOMER'S CUT-OFF VALVE AND PRV (WHEN REQ'D.) 300mm x 425mm x 300mm (12"x17"x12") OR EQUAL. SIZE MAY VARY WITH PRV AND SHOULD BE SIZED FOR OPERATION OF BALL VALVE. SEE SPL WW-145A.

Ⓡ RECTANGULAR PLASTIC BOX LID, 300mm x 425mm x 300mm (12" x 17" x 12") OR EQUAL. SEE SPL WW-145A.

CITY OF AUSTIN AUSTIN WATER UTILITY	POTABLE HDPE DOUBLE SERVICE INSTALLATION & TWO 16mm, 19mm, OR 25mm (5/8", 3/4", OR 1") METERS	
Kathi L Flowers 8/31/2011	THE ARCHITECT/ENGINEER ASSUMES RESPONSIBILITY FOR APPROPRIATE USE OF THIS STANDARD.	STANDARD NO. 520S-9B 2 OF 3

NOTES:

1. SERVICE SADDLE SHALL BE WRAPPED COMPLETELY WITH 0.2 mm (8 MIL) POLYETHYLENE FILM.
2. BRANCH CONNECTION AND BOTH ANGLE METER STOPS MUST BE INSTALLED PRIOR TO FIRST METER INSTALLATION EVEN THOUGH SECOND PROPERTY MAY NOT BE READY FOR SERVICE.
3. TOP OF BOXES SHOULD BE 25mm (1") ABOVE GROUND OR FLUSH WITH PAVEMENT SURFACE.
4. PIPING AND TUBING IN STREET RIGHT-OF-WAY SHALL BE BEDDED IN GRANULAR MATERIALS AS REQUIRED BY SECTION 510.3 (14) OF THE CITY OF AUSTIN STANDARD SPECIFICATIONS; BACKFILL ABOVE GRANULAR BEDDING AS REQUIRED BY SECTION 510.3 (25).
5. BOX MUST BE BEHIND CURB NEXT TO PROPERTY LINE AND/OR SIDEWALK AND OUT OF VEHICULAR TRAFFIC AREA.
6. INSTALL METALLIC WARNING TAPE MIN. 1' ABOVE P.E. TUBING FROM TAP CONNECTION TO METER.
7. TUBING SHALL BE PLACED SO THAT IT IS RELAXED AND "SNAKES" LOOSELY IN THE TRENCH.
8. TUBING, WHEN BENT, SHALL HAVE A RADIUS NO SMALLER THAN THE VALUE SHOWN IN TABLE 1.
9. IF A FITTING WILL BE INSTALLED WITHIN A BENT SECTION OF TUBING, THE TUBING SHALL SHALL HAVE A RADIUS NO SMALLER THAN THE VALUE SHOWN IN TABLE 2.
10. B.V. Ⓔ SHALL NOT BE LOCATED UNDER CURB OR PAVEMENT, AND NOT BE LOCATED MORE THAN 600mm (24") HORIZONTALLY FROM METER BOX OR 900mm (36") BELOW FINAL GRADE.
11. INSERT STIFFENERS FOR P.E. TUBING PER SPL WW-65B TO BE INSTALLED INSIDE TUBING AT ALL COMPRESSION FITTINGS.

TABLE 1 (SEE NOTE 8)	
Nominal Tubing Dia.	Bend Radius of at Least
25mm (1")	0.9m (3')
38mm (1-1/2")	1.2m (4')
50mm (2")	1.5m (5')

TABLE 2 (SEE NOTE 9)	
Nominal Tubing Dia.	Bend Radius of at Least
25mm (1")	3.66m (12')
38mm (1-1/2")	4.86m (16')
50mm (2")	6.06m (20')

CITY OF AUSTIN AUSTIN WATER UTILITY	POTABLE HDPE DOUBLE SERVICE INSTALLATION & TWO 16mm, 19mm, OR 25mm (5/8", 3/4", OR 1") METERS	
Kathi L Flowers 8/31/2011	THE ARCHITECT/ENGINEER ASSUMES RESPONSIBILITY FOR APPROPRIATE USE OF THIS STANDARD.	STANDARD NO. 520S-9B 3 OF 3

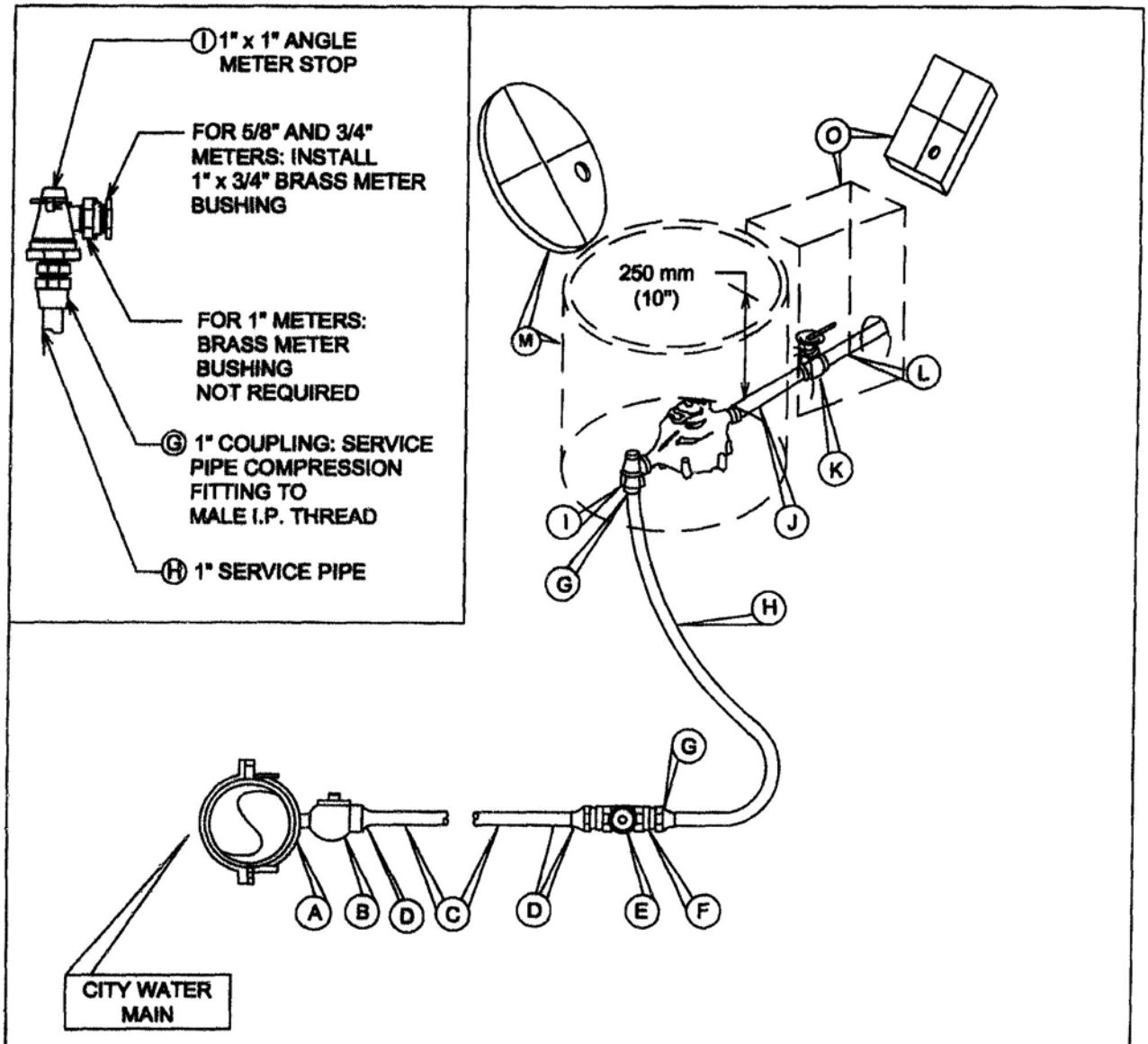

CITY RESPONSIBILITY ENDS ON THE CUSTOMER SIDE OF THE METER BOX

CITY OF AUSTIN AUSTIN WATER UTILITY	INSTALLATION FOR A 16mm, 19mm OR 25mm (5/8", 3/4" OR 1") POTABLE METER	
Kathi A Flowers 8/31/2011	THE ARCHITECT/ENGINEER ASSUMES RESPONSIBILITY FOR APPROPRIATE USE OF THIS STANDARD.	STANDARD NO. 520S-11 1 OF 2

MATERIAL LIST

Ⓐ SERVICE CLAMP REQUIRED ON ALL PLASTIC AND ASBESTOS CEMENT PIPE AND ON ALL IRON PIPE 300mm (12") AND SMALLER.

Ⓑ 38mm (1-1/2") CORPORATION STOP-SERVICE PIPE OUTLET. SPL WW-68

Ⓒ 38mm (1-1/2") SERVICE PIPE

Ⓓ 38mm (1-1/2") COUPLING: SERVICE PIPE TO MALE I.P.T. (COMPRESSION FITTING)

Ⓔ 38mm (1-1/2") BALL VALVE. SEE SPL WW -275

Ⓕ BRONZE BUSHING, 38mm x 25mm (1-1/2"x1") I.P. THREADS

Ⓖ 25mm (1") COUPLING: SERVICE PIPE TO MALE I.P.T.(COMPRESSION FITTING).

Ⓗ 25mm (1") SERVICE PIPE PER SPL-WW-65.

Ⓘ ANGLE METER STOP: SERVICE PIPE INLET x SWIVEL COUPLING NUT OUTLET AND BRASS BUSHING:
-FOR 16mm AND 19mm (5/8" AND 3/4") METERS: 25mm x 19mm (1"x3/4") BRASS METER BUSHING.
-FOR 25mm (1") METERS: BRASS METER BUSHING NOT REQUIRED.
-FOR ALL, SEE SPL WW-68.

Ⓙ WATER METER COUPLING: MALE I.P.T. x SWIVEL COUPLING NUT:
-FOR 16mm AND 19mm (5/8" AND 3/4") METERS: 19mm x 213mm (3/4"x8-1/2") LONG
-FOR 25mm (1") METERS: 25mm x 213mm (1"x8-1/2") LONG

Ⓚ BALL VALVE. SEE SPL WW-276. 19mm OR 25mm (3/4" OR 1") (PROPERTY OWNER'S CUT-OFF VALVE)

Ⓛ 19mm or 25mm (3/4" or 1") PIPE MEETING CITY OF AUSTIN PLUMBING CODE REQUIREMENTS.

Ⓜ AMR/AMI READY METER BOX AND LID PER SPL WW-145 OR WW-145A

Ⓝ N/A

Ⓞ PROPERTY OWNER'S BALL VALVE BOX AND LID, RECTANGULAR PLASTIC BOX, DFW #D1200 OR EQUAL.

NOTES:

1. SERVICE PIPE SHALL BE COPPER TUBE SIZE. IT SHALL BE ANNEALED SEAMLESS TYPE "K" COPPER TUBING MEETING THE CURRENT ASTM B88 STANDARD WITH NO SWEAT OR SOLDERED JOINTS.
2. SERVICE SADDLE SHALL BE WRAPPED COMPLETELY WITH 0.2mm (8 MIL) POLYETHYLENE FILM.
3. TOP OF BOXES SHOULD BE 25mm (1") ABOVE GROUND OR FLUSH WITH PAVEMENT SURFACE.
4. PIPING AND TUBING IN STREET RIGHT-OF-WAY SHALL BE BEDDED IN GRANULAR MATERIALS AS REQUIRED BY SECTION 510.3 (14) OF THE CITY OF AUSTIN STANDARD SPECIFICATIONS: BACKFILL ABOVE GRANULAR BEDDING AS REQUIRED BY SECTION 510.3 (25).
5. BOX MUST BE BEHIND CURB NEXT TO PROPERTY LINE OR EASEMENT, AND OUT OF SIDEWALK AND VEHICULAR TRAFFIC AREA.
6. BALL VALVE Ⓔ SHALL NOT BE LOCATED UNDER CURB OR PAVEMENT, AND NOT BE LOCATED MORE THAN 600mm (24") HORIZONTALLY FROM METER BOX OR 900mm (36") BELOW FINAL GRADE.

CITY OF AUSTIN AUSTIN WATER UTILITY	INSTALLATION FOR A 16mm, 19mm OR 25mm (5/8", 3/4" OR 1") POTABLE METER	
Kathi L Flowers 8/31/2011	THE ARCHITECT/ENGINEER ASSUMES RESPONSIBILITY FOR APPROPRIATE USE OF THIS STANDARD.	STANDARD NO. 520S-11 2 OF 2

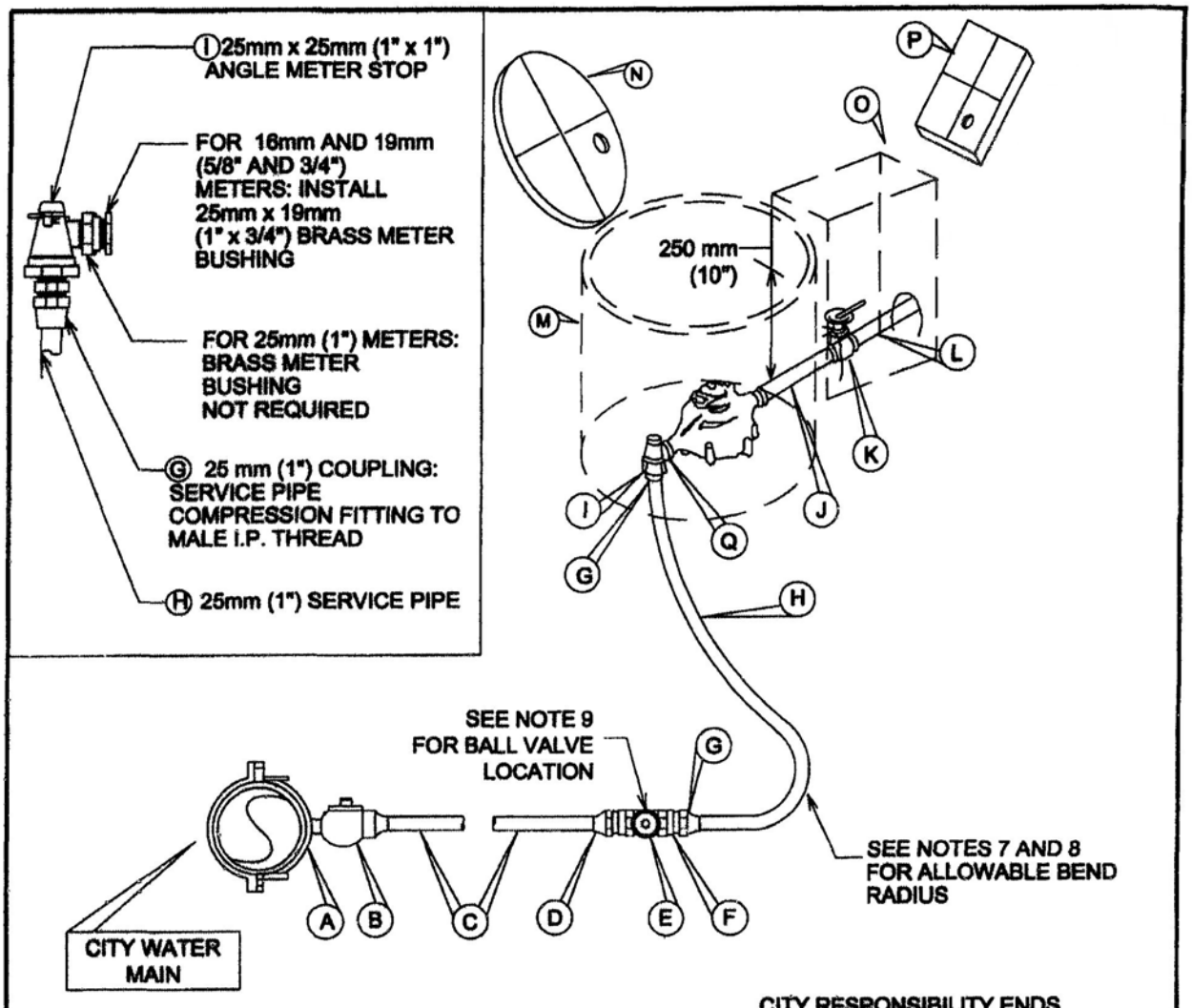

CITY RESPONSIBILITY ENDS ON THE CUSTOMER SIDE OF THE METER BOX

TABLE 1 (SEE NOTE 7)	
Nominal Tubing Dia.	Bend Radius of at Least
25mm (1")	0.9m (3')
38mm (1-1/2")	1.2m (4')
50mm (2")	1.5m (5')

TABLE 2 (SEE NOTE 8)	
Nominal Tubing Dia.	Bend Radius of at Least
25mm (1")	3.66m (12')
38mm (1-1/2")	4.86m (16')
50mm (2")	6.06m (20')

CITY OF AUSTIN AUSTIN WATER UTILITY	POTABLE HDPE SERVICE & 16mm, 19mm, AND 25mm (5/8", 3/4", AND 1") METER INSTALLATION	
Kathi L Flowers 8/31/2011	THE ARCHITECT/ENGINEER ASSUMES RESPONSIBILITY FOR APPROPRIATE USE OF THIS STANDARD.	STANDARD NO. 520S-11B 1 OF 2

MATERIAL LIST

Ⓐ SERVICE CLAMP REQUIRED ON ALL PLASTIC AND ASBESTOS CEMENT PIPE AND ON ALL IRON PIPE 300mm (12") AND SMALLER.
Ⓑ 50mm (2") CORPORATION STOP MALE THREAD INLET BY COMPRESSION OUTLET, SPL WW-68.
Ⓒ 50mm (2") SERVICE TUBING.
Ⓓ COUPLING: 50mm (2") COMPRESSION TO 38mm (1-1/2") MALE I.P.T.
Ⓔ 38mm (1-1/2") BALL VALVE; SEE SPL WW-275 AND NOTE 9.
Ⓕ BRONZE BUSHING, 38mm x 25mm (1-1/2" x 1") I.P.T.
Ⓖ 25mm (1") COUPLING: COMPRESSION TO MALE I.P.T.
Ⓗ 25mm (1") SERVICE TUBING PER SPL WW-65.
Ⓘ ANGLE METER STOP: SERVICE TUBING INLET x SWIVEL COUPLING NUT OUTLET AND BRASS BUSHING:
-FOR 16mm AND 19mm (5/8" AND 3/4") METERS: 25mm x 19mm (1" x 3/4") BRASS BUSHING.
-FOR 25mm (1") METERS BRASS METER BUSHING NOT REQUIRED.
-FOR ALL SEE SPL WW-68.
Ⓙ WATER METER COUPLING: MALE I.P.T. x SWIVEL COUPLING NUT:
-FOR 16mm AND 19mm (5/8" AND 3/4") METERS: 19mm x 213mm (3/4" x 8-1/2") LONG.
-FOR 25 mm (1") METERS: 25mm x 213mm (1" x 8-1/2") LONG.
Ⓚ BALL VALVE 19mm OR 25mm (3/4" OR 1") (PROPERTY OWNER'S CUT-OFF VALVE, SEE SPL WW-276).
Ⓛ 19mm OR 25mm (3/4" OR 1") TUBING MEETING CITY OF AUSTIN PLUMBING CODE REQUIREMENTS
Ⓜ METER BOX PER SPL WW-145 OR WW-145A.
Ⓝ AMR/AMI READY LID-FOR METER BOX, LID FURNISHED WITH APPROVED BOX.
Ⓞ PROPERTY OWNER'S CUT-OFF VALVE BOX-RETANGULAR PLASTIC BOX.
Ⓟ RECTANGULAR PLASTIC BOX LID, 300mm x 425mm x 300mm (12" x 17" x 12") OR EQUAL.
Ⓠ ANGLE METER STOP: SERVICE TUBING INLET x SWIVEL COUPLING NUT OUTLET:
-FOR 16mm and 19mm (5/8" and 3/4") METERS: 25mm x 19mm (1" x 3/4")
-FOR 25mm (1") METERS: 25mm x 25mm (1" x 1")

NOTES:

1. SERVICE SADDLE SHALL BE WRAPPED COMPLETELY WITH 0.2mm (8 MIL) POLYETHYLENE FILM.
2. TOP OF BOXES SHOULD BE 25mm (1") ABOVE GROUND OR FLUSH WITH PAVEMENT SURFACE.
3. PIPING AND TUBING IN STREET RIGHT-OF-WAY SHALL BE BEDDED IN GRANULAR MATERIALS AS REQUIRED BY SECTION 510.3 (14) OF THE CITY OF AUSTIN STANDARD SPECIFICATIONS: BACKFILL ABOVE GRANULAR BEDDING AS REQUIRED BY SECTION 510.3 (25).
4. BOX MUST BE BEHIND CURB NEXT TO PROPERTY LINE AND/OR SIDEWALK AND OUT OF VEHICULAR TRAFFIC AREA.
5. INSTALL METALLIC WARNING TAPE (MAGNETIC TRACER TAPE) MIN. 300mm (1') ABOVE P.E. TUBING FROM TAP CONNECTION TO METER.
6. TUBING SHALL BE PLACED SO THAT IT IS RELAXED AND "SNAKES" LOOSELY IN THE TRENCH.
7. TUBING, WHEN BENT, SHALL HAVE A RADIUS NO SMALLER THAN THE VALUE SHOWN IN TABLE 1.
8. IF A FITTING WILL BE INSTALLED WITHIN A BENT SECTION OF TUBING, THE TUBING SHALL HAVE A RADIUS NO SMALLER THAN THE VALUE SHOWN IN TABLE 2.
9. B.V. Ⓔ SHALL NOT BE LOCATED UNDER CURB OR PAVEMENT, AND NOT BE LOCATED MORE THAN 600mm (24") HORIZONTALLY FROM METER BOX OR 900mm (36") BELOW FINAL GRADE.
10. INSERT STIFFENERS FOR P.E. TUBING PER SPL WW-65B TO BE INSTALLED INSIDE TUBING AT ALL COMPRESSION FITTINGS.

CITY OF AUSTIN AUSTIN WATER UTILITY	POTABLE HDPE SERVICE & 16mm, 19mm, AND 25mm (5/8", 3/4", AND 1") METER INSTALLATION	
Kathi L Flowers 8/31/2011	THE ARCHITECT/ENGINEER ASSUMES RESPONSIBILITY FOR APPROPRIATE USE OF THIS STANDARD.	STANDARD NO. 520S-11B 2 OF 2

CITY RESPONSIBILITY ENDS ON THE CUSTOMER SIDE OF THE METER BOX

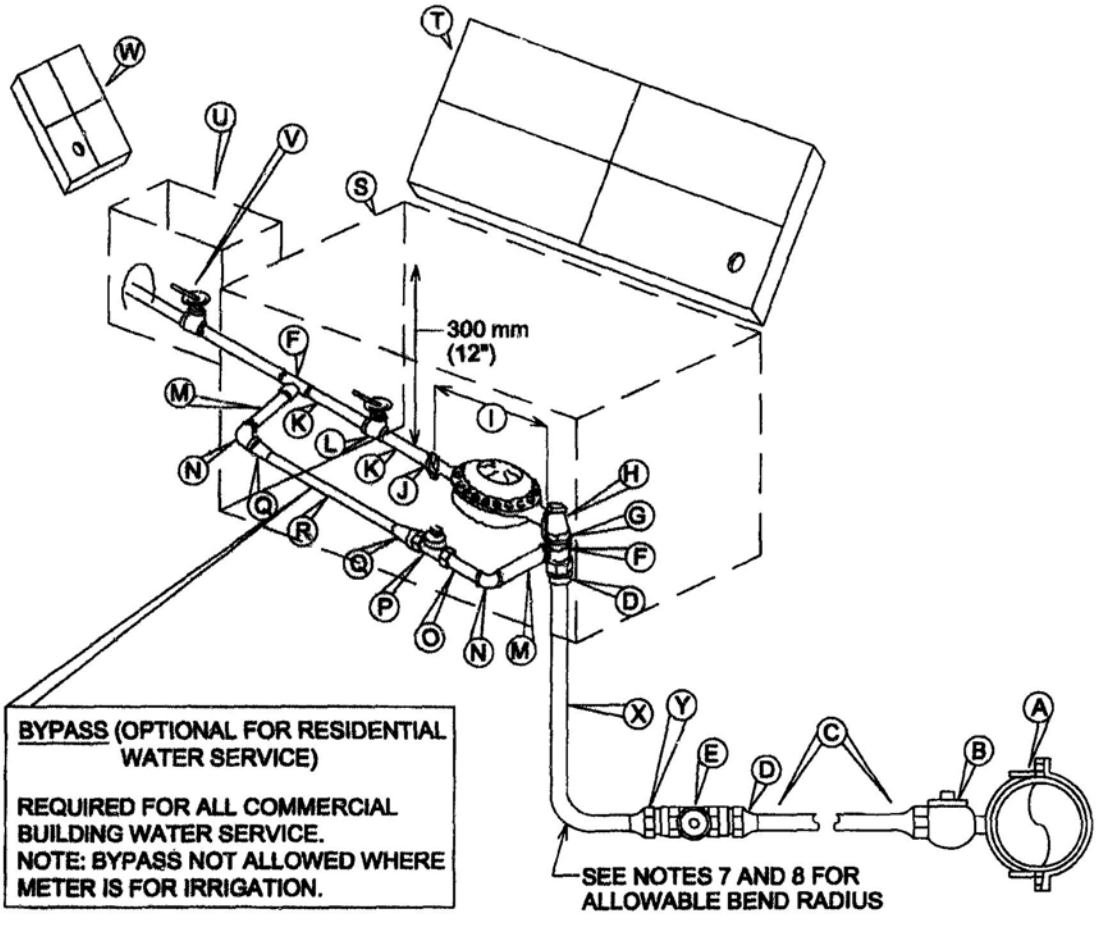

BYPASS (OPTIONAL FOR RESIDENTIAL WATER SERVICE)

REQUIRED FOR ALL COMMERCIAL BUILDING WATER SERVICE.
NOTE: BYPASS NOT ALLOWED WHERE METER IS FOR IRRIGATION.

CITY OF AUSTIN WATER UTILITY	POTABLE HDPE SERVICE INSTALLATION FOR 38 mm (1-1/2") METER	
Kathi L Flowers 8/31/2011	THE ARCHITECT/ENGINEER ASSUMES RESPONSIBILITY FOR APPROPRIATE USE OF THIS STANDARD	STANDARD NO. 520S-13B 1 OF 3

MATERIALS LIST

Ⓐ 50mm (2") SERVICE CLAMP FOR CONNECTION-REQUIRED ON ALL PLASTIC AND ASBESTOS CEMENT PIPE AND IRON PIPE 300mm (12") AND SMALLER.
Ⓑ 50mm (2") CORPORATION STOP - MALE THREAD INLET BY COMPRESSION OUTLET
Ⓒ 50mm (2") SERVICE TUBING PER SPL WW-65
Ⓓ COUPLING: 500mm (2") COMPRESSION TO 38mm (1-1/2") MALE I.P.T.
Ⓔ 38mm (1-1/2") BALL VALVE. SEE SPL WW-275 AND NOTE 9.

Ⓕ 38mm (1-1/2") x 38mm (1-1/2") x 25mm (1") TEES, BRASS

Ⓖ 38mm (1-1/2") CLOSE-NIPPLE, BRASS
Ⓗ 38mm (1-1/2") ANGLE METER STOP, FEMALE I.P.T. INLET x FLANGE OUTLET
Ⓘ 38mm (1-1/2") WATER METER LENGTH WITH GASKETS
Ⓙ 38mm (1-1/2") METER FLANGE, BRASS FEMALE I.P.T
Ⓚ 38mm (1-1/2") x 200mm (8") NIPPLE, BRASS, MIPT

Ⓛ 38mm (1-1/2") BALL VALVE. SEE SPL WW-275
Ⓜ 25mm (1") x 125mm (5") NIPPLES, BRASS, MIPT

Ⓝ 25mm (1") 90° ELBOWS, BRASS, FIPT
Ⓞ 25mm (1") x 75mm (3") NIPPLES, BRASS, MIPT

Ⓟ 25mm (1") CURB STOP, BRASS, FEMALE I.P.T BOTH ENDS WITH LOCK NUTS
Ⓠ 25mm (1") COUPLINGS, BRASS, SERVICE PIPE TO MIPT
Ⓡ 25mm (1") SERVICE PIPE
Ⓢ RECTANGULAR METER BOX. SEE SPL WW-145 OR WW-145A
Ⓣ AMI/AMR READY LID FOR METER BOX. SEE SPL WW-622
OR APPROVED EQUAL; OR LID FURNISHED WITH APPROVED METER BOX. SPL WW-145A
Ⓤ RECTANGULAR BOX FOR CUSTOMER'S CUT-OFF VALVE (AND PRV WHEN REQ'D.)
SPL-WW-145A 300mm x 425mm x 300mm (12"x17"x12")
Ⓥ 38mm (1-1/2") CUSTOMER'S BALL VALVE. SEE SPL WW-276
Ⓦ RECTANGULAR PLASTIC BOX LID, SPL-WW-145A
Ⓧ 38mm (1-1/2") SERVICE TUBING PER SPL WW-65
Ⓨ COUPLING: 38mm (1-1/2") COMPRESSION TO 38mm (1-1/2") MALE I.P.T.

CITY OF AUSTIN WATER UTILITY	POTABLE HDPE SERVICE INSTALLATION FOR 38 mm (1-1/2") METER	
Kathi L Flowers 8/31/2011	THE ARCHITECT/ENGINEER ASSUMES RESPONSIBILITY FOR APPROPRIATE USE OF THIS STANDARD	STANDARD NO. 520S-13B 2 OF 3

NOTES:

1. SERVICE SADDLE SHALL BE WRAPPED COMPLETELY WITH 0.2mm (8 MIL) POLYETHYLENE FILM.
2. TOP OF BOXES SHALL BE 25mm (1") ABOVE GROUND.
3. PIPING AND TUBING IN RIGHT-OF-WAY SHALL BE BEDDED IN GRANULAR MATERIALS AS REQUIRED BY SECTION 510.3 (14) OF THE CITY OF AUSTIN STANDARD SPECIFICATIONS: BACKFILL ABOVE GRANULAR BEDDING AS REQUIRED BY SECTION 510.3 (25).
4. BOX SHALL BE BEHIND CURB NEXT TO PROPERTY LINE OR EASEMENT, AND NOT LOCATED IN SIDEWALK OR VEHICULAR TRAFFIC AREA.
5. INSTALL METALLIC WARNING TAPE (MAGNETIC TRACER TAPE) MIN. 300mm (1') ABOVE P.E. TUBING FROM TAP CONNECTION TO METER.
6. TUBING SHALL BE PLACED SO THAT IT IS RELAXED AND "SNAKES" LOOSELY IN THE TRENCH.
7. TUBING, WHEN BENT, SHALL HAVE A RADIUS NO SMALLER THAN THE VALUE SHOWN IN TABLE 1.
8. IF A FITTING WILL BE INSTALLED WITHIN A BENT SECTION OF TUBING, THE TUBING SHALL HAVE A RADIUS NO SMALLER THAN THE VALUE SHOWN IN TABLE 2.
9. B.V. Ⓔ SHALL NOT BE LOCATED UNDER CURB OR PAVEMENT, AND NOT BE LOCATED MORE THAN 600mm (24") HORIZONTALLY FROM METER BOX OR 900mm (36") BELOW FINAL GRADE.
10. INSERT STIFFENER FOR P.E. TUBING TO BE INSTALLED INSIDE TUBING AT ALL COMPRESSION FITTINGS. SEE SPL WW-65B.

TABLE 1 (SEE NOTE 7)	
Nominal Tubing Dia.	Bend Radius of at Least
25mm (1")	0.9m (3')
38mm (1-1/2")	1.2m (4')
50mm (2")	1.5m (5')

TABLE 2 (SEE NOTE 8)	
Nominal Tubing Dia.	Bend Radius of at Least
25mm (1")	3.66m (12')
38mm (1-1/2")	4.86m (16')
50mm (2")	6.06m (20')

CITY OF AUSTIN WATER UTILITY	POTABLE HDPE SERVICE INSTALLATION FOR 38 mm (1-1/2") METER	
Kathi L Flowers 8/30/2011	THE ARCHITECT/ENGINEER ASSUMES RESPONSIBILITY FOR APPROPRIATE USE OF THIS STANDARD	STANDARD NO. 520S-13B 3 OF 3

STANDARD SYMBOL
— — — TFD — — —

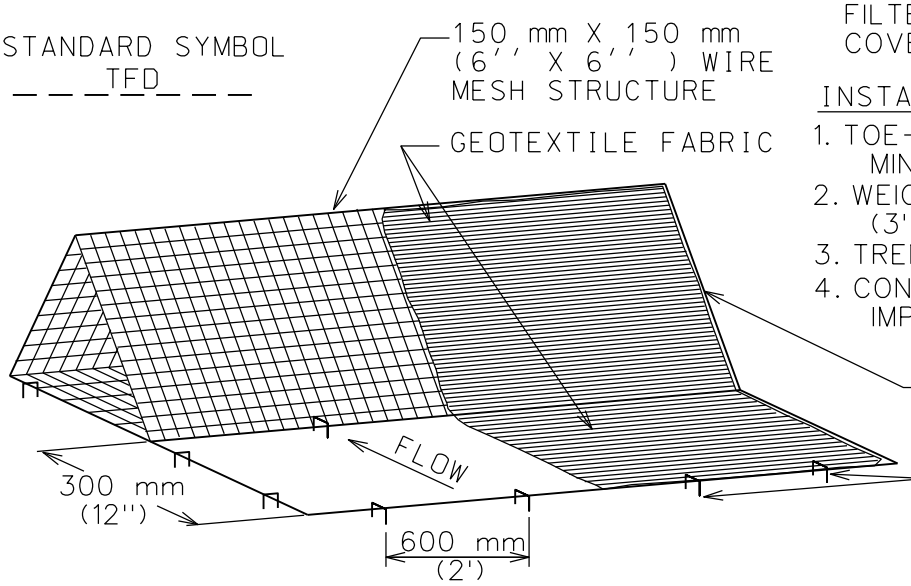

NOTE:
FILTER FABRIC SHALL ENTIRELY COVER DIKE AND SKIRT.

INSTALLATION DETAIL OPTIONS:

1. TOE-IN 150 mm (6'') MINIMUM.
2. WEIGHTED WITH 75 mm-125 mm (3''-5'') OPEN.
3. TRENCHED IN 100 mm (4'').
4. CONTINUOUS BACKING/PLANKS ON IMPERVIOUS SURFACES.

CUT AWAY OF FILTER FABRIC

150 mmX25 mmX150 mm (6''X1''X6'') ANCHORS EVERY 600 mm (2')

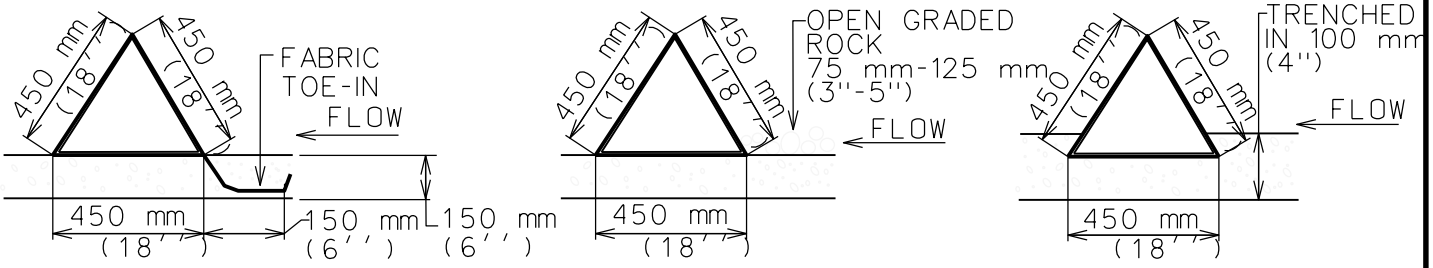

GENERAL NOTES

1. DIKES SHALL BE PLACED IN A ROW WITH ENDS TIGHTLY ABUTTING THE ADJACENT DIKE.
2. THE FABRIC COVER AND SKIRT SHALL BE A CONTINUOUS WRAPPING OF GEOTEXTILE. THE SKIRT SHALL BE A CONTINUOUS EXTENSION OF THE FABRIC ON THE UPSTREAM FACE.
3. THE SKIRT SHALL BE WEIGHTED WITH A CONTINUOUS LAYER OF 75-125 mm (3-5'') OPEN GRADED ROCK OR TOED-IN 150 mm (6'') WITH MECHANICALLY COMPACTED MATERIAL. OTHERWISE, THE ENTIRE STRUCTURE SHALL BE TRENCHED IN 100 mm (4'').
4. DIKES AND SKIRT SHALL BE SECURELY ANCHORED IN PLACE USING 150 mm (6'') WIRE STAPLES ON 600 mm (2') CENTERS ON BOTH EDGES AND SKIRT, OR STAKE USING 10M (3/8'') DIAMETER RE-BAR WITH TEE ENDS.
5. FILTER MATERIAL SHALL BE LAPPED OVER ENDS 150 mm (6'') TO COVER DIKE TO DIKE JOINTS. JOINTS SHALL BE FASTENED WITH GALVANIZED SHOAT RINGS.
6. THE DIKE STRUCTURE SHALL BE MW40-150 mmX150 mm (6 GA. 6''X6'') WIRE MESH, 450 mm (18'') ON A SIDE.
7. INSPECTION SHALL BE MADE WEEKLY OR AFTER EACH RAINFALL EVENT AND REPAIR OR REPLACEMENT SHALL BE MADE PROMPTLY AS NEEDED BY THE CONTRACTOR.
8. ACCUMULATED SILT SHALL BE REMOVED WHEN IT REACHES A DEPTH OF 150 mm (6'') AND DISPOSED OF IN A MANNER WHICH WILL NOT CAUSE ADDITIONAL SILTATION.
9. AFTER THE DEVELOPMENT SITE IS COMPLETLY STABILIZED, THE DIKES AND ANY REMAINING SILT SHALL BE REMOVED. SILT SHALL BE DISPOSED OF AS INDICATED IN GENERAL NOTE 8 ABOVE.

CITY OF AUSTIN WATERSHED PROTECTION DEPARTMENT		TRIANGULAR SEDIMENT FILTER DIKE	
RECORD COPY SIGNED BY J. PATRICK MURPHY	*3/27/00* ADOPTED	THE ARCHITECT/ENGINEER ASSUMES RESPONSIBILITY FOR APPROPRIATE USE OF THIS STANDARD.	STANDARD NO. 628S

TRENCH REPAIR IN ASPHALTIC SURFACE OVER FLEXIBLE BASE
(UCM SECTION 5.8.0)

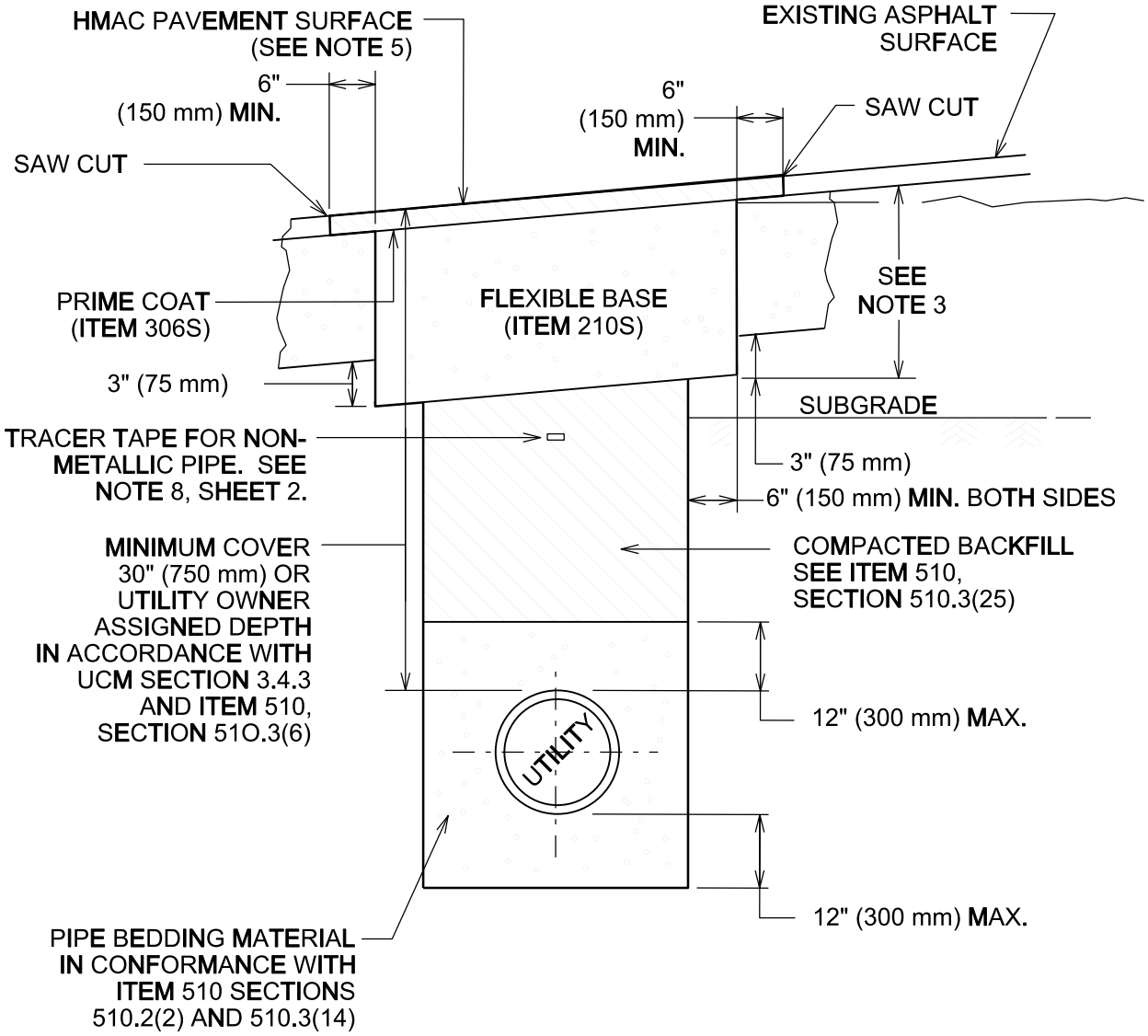

CITY OF AUSTIN DEPARTMENT OF PUBLIC WORKS		FLEXIBLE BASE WITH ASPHALT SURFACE TRENCH REPAIR-EXISTING PAVEMENT	
RECORD COPY SIGNED BY KERI JUAREZ	01/04/11 ADOPTED	THE ARCHITECT/ENGINEER ASSUMES RESPONSIBILITY FOR APPROPRIATE USE OF THIS STANDARD.	STANDARD NO. 1100S-2 1 OF 2

NOTES:

1. THE EXISTING PAVING SURFACE SHALL BE SAW CUT IN A STRAIGHT LINE, A MINIMUM OF 12" (300 mm) WIDER THAN UNDISTURBED SIDES OF THE TRENCH AND SYMMETRICAL ABOUT THE CENTER LINE OF THE EXCAVATION.

2. IF EXCAVATION AREA IS OPEN FOR TEMPORARY PUBLIC USE, THE SURFACE SHALL BE MAINTAINED LEVEL WITH ADJACENT RIDING SURFACE WITH COLD MIX AC OR TEMPORARY HMAC. TEMPORARY MIX SHALL BE PLACED OVER FLEXIBLE BASE.

3. ROAD BASE SHALL BE REPLACED IN KIND WITH BASE THICKNESS EQUAL TO EXISTING BASE THICKNESS PLUS 3" (75 mm), BUT IN NO CASE LESS THAN 12" (300 mm).

4. DAMAGED PAVEMENT OUTSIDE THE TRENCH CUT SHALL BE REMOVED AND REPLACED WITH A BASE THICKNESS OF 10" (250 mm) OR A THICKNESS MATCHING EXISTING, WHICHEVER IS GREATER.

5. REPLACEMENT AC SURFACE LAYER SHALL BE OF THE TYPE AND THICKNESS BASED ON FUNCTIONAL CLASSIFICATION.
   a) MIN. 2" (50 mm) HMAC TYPE "D" FOR TRENCH REPAIR IN LOCAL/RESIDENTIAL STREETS.
   b) MIN. 3" (75 mm) HMAC TYPE "C" FOR TRENCH REPAIR IN COLLECTOR/ARTERIAL STREETS.

   SEE ITEM 340S, SECTION 340S.4.

6. CLASS "J" PC CONCRETE (ITEM 403S) OR CONTROLLED LOW STRENGTH MATERIAL (CLSM) MAY BE SUBSTITUTED IN THESE REPAIRS FOR THE FLEXIBLE BASE AND COMPACTED BACKFILL. PC CONCRETE GREATER THAN A 2 SACK MIX WILL NOT BE ALLOWED.

7. TACK COAT ALL EXPOSED EDGES AND SURFACES (SPEC ITEM 307S).

8. AS PER CITY OF AUSTIN STANDARD SPECIFICATION 510, SECTION 510.2(8)(K)5, FOR ALL NON-METALLIC PIPE, DIRECTLY ABOVE THE CENTERLINE OF THE PIPE AND A MINIMUM OF 12" (300 mm) BELOW THE SUBGRADE, OR A MINIMUM OF 18" (450 mm) BELOW FINISHED GRADE ON AREAS OUTSIDE THE LIMITS OF PAVEMENT, SHALL BE PLACED INDUCTIVE TRACER TAPE IN ACCORDANCE WITH THE MANUFACTURER'S REQUIREMENTS. THE TAPE SHALL BE ENCASED IN A PROTECTIVE, INERT, PLASTIC JACKET AND COLOR CODED IN ACCORDANCE WITH APWA UNIFORM COLOR CODE.

CITY OF AUSTIN DEPARTMENT OF PUBLIC WORKS		FLEXIBLE BASE WITH ASPHALT SURFACE TRENCH REPAIR-EXISTING PAVEMENT	
RECORD COPY SIGNED BY KERI JUAREZ	01/04/11 ADOPTED	THE ARCHITECT/ENGINEER ASSUMES RESPONSIBILITY FOR APPROPRIATE USE OF THIS STANDARD.	STANDARD NO. 1100S-2 2 OF 2

Austin Water

General Construction Notes

AUSTIN WATER GENERAL CONSTRUCTION NOTES
June 07, 2016

1. THE CITY STANDARD CONSTRUCTION SPECIFICATIONS CURRENT AT THE TIME OF BIDDING SHALL COVER MATERIAL AND METHODS USED TO DO THIS WORK.

2. CONTRACTOR MUST OBTAIN A STREET CUT PERMIT FROM AUSTIN TRANSPORTATION DEPARTMENT, RIGHT OF WAY MANAGEMENT DIVISION BEFORE BEGINNING CONSTRUCTION WITHIN THE RIGHT-OF-WAY OF A PUBLIC STREET OR ALLEY.

3. AT LEAST 48 HOURS BEFORE BEGINNING ANY WATER AND WASTEWATER CONSTRUCTION IN PUBLIC R.O.W. OR PUBLIC EASEMENT, THE CONTRACTOR SHALL NOTIFY AUSTIN TRANSPORTATION INSPECTION OR DEVELOPMENT SERVICES DEPARTMENT, SITES AND SUBDIVISION INSPECTION, AT THE NUMBER INDICATED ON THE PLANS BY THE AW PLAN REVIEWER.

4. THE CONTRACTOR SHALL CONTACT THE AUSTIN AREA "ONE CALL" SYSTEM AT 1-800-344-8377 FOR EXISTING UTILITY LOCATIONS PRIOR TO ANY EXCAVATION IN ADVANCE OF CONSTRUCTION. THE CONTRACTOR SHALL VERIFY THE LOCATIONS OF ALL UTILITIES TO BE EXTENDED, TIED TO, OR ALTERED, OR SUBJECT TO DAMAGE/INCONVENIENCE BY THE CONSTRUCTION OPERATIONS. THE AUSTIN WATER MAINTENANCE RESPONSIBILITY ENDS AT R.O.W./EASEMENT LINES.

5. NO OTHER UTILITY SERVICE/APPURTENANCES SHALL BE PLACED NEAR THE PROPERTY LINE, OR OTHER ASSIGNED LOCATION DESIGNATED FOR WATER, RECLAIMED WATER AND WASTEWATER UTILITY SERVICE THAT WOULD INTERFERE WITH THE WATER, RECLAIMED WATER AND WASTEWATER SERVICES.

6. THE CITY SPECIFICATION ITEM 509S WILL BE REQUIRED AS A MINIMUM TRENCH SAFETY MEASURE.

7. ALL MATERIALS TESTS, INCLUDING SOIL DENSITY TESTS AND DETAILED SOIL ANALYSES, SHALL BE CONDUCTED BY AN INDEPENDENT LABORATORY AND FUNDED BY THE OWNER IN ACCORDANCE WITH CITY STANDARD SPECIFICATION ITEM 1804S.04.

8. PRESSURE TAPS SHALL BE IN ACCORDANCE WITH CITY STANDARD SPECIFICATION ITEM 510.3(24). THE CONTRACTOR SHALL PERFORM EXCAVATION ETC., AND SHALL FURNISH, INSTALL AND AIR TEST THE SLEEVE AND VALVE. WHEN CONTRACTORS MAKE THE TAP A CITY INSPECTOR MUST BE PRESENT AND 2 WORKING DAYS (MIN.) NOTICE MUST BE GIVEN. "SIZE ON SIZE" TAPS WILL NOT BE PERMITTED, UNLESS, IT HAS BEEN DEMONSTRATED THAT A MORE ACCEPTABLE CONNECTION WOULD INVOLVE CONSIDERABLE HARDSHIP TO THE UTILITY SYSTEM. ALL TAPS SHALL BE MADE BY USE OF AN APPROVED FULL CIRCLE-GASKETED CAST IRON OR DUCTILE IRON TAPPING SLEEVE. CONCRETE BLOCKING SHALL BE PLACED UNDER ALL TAP SLEEVES PRIOR TO MAKING THE PRESSURE TAP AND THE USE OF PRECAST BLOCKS MAY BE USED TO HOLD THE TAP IN ITS CORRECT POSITION PRIOR TO BLOCKING. THE BLOCKING BEHIND AND UNDER THE TAP SHALL HAVE A MINIMUM OF 24 HOURS CURING TIME BEFORE THE VALVE CAN BE RE-OPENED FOR SERVICE FROM THAT TAP.

9. THRUST RESTRAINT SHALL BE IN ACCORDANCE WITH CITY STANDARD SPECIFICATION ITEM 510.3 (22).

10. ALL BRANCH CONNECTIONS SHALL HAVE THE VALVE BOLTED TO THE MAIN BY METHODS OF FLANGE OR SWIVEL TEES. FOSTER ADAPTORS MAY BE USED IN LIEU OF FLANGE OR SWIVEL TEES WHEN CALLED OUT ON THE PLANS BY THE DESIGN ENGINEER.

11. A). FIRE HYDRANTS SHALL BE SET IN ACCORDANCE WITH CITY STANDARD SPECIFICATION ITEM 511S.4 B). FIRE HYDRANTS SHALL BE PAINTED FLYNT ALUMINUM OR EQUAL.

12. WATER LINE TESTING AND STERILIZATION SHALL BE PERFORMED IN ACCORDANCE WITH CITY STANDARD SPECIFICATION ITEMS 510.3 (27)-(29). FORCE MAIN PRESSURE TESTING SHALL BE CONDUCTED AND FALL UNDER THE SPECIFICATIONS AS WATER LINES (PRESSURE PIPE) OR AT THE PRESSURES SHOWN ON THE APPROVED PLANS.

13. ALL MATERIAL USED ON THIS PROJECT MUST BE LISTED ON THE STANDARD PRODUCTS LISTING. ANY MATERIAL NOT LISTED HAS TO GO THROUGH THE REVIEW OF THE STANDARDS COMMITTEE FOR REVIEW AND APPROVAL <u>PRIOR TO START OF PROJECT.</u> TESTING AND EVALUATION OF PRODUCTS ARE REQUIRED BEFORE APPROVAL WILL BE GIVEN ANY CONSIDERATION.

14. WHEN WATER SERVICES ARE DAMAGED AND THE SERVICE MATERIAL IS PE, THE LINE SHALL BE REPAIRED ONLY BY HEAT FUSION WELD OR REPLACED THE FULL LENGTH WITH TYPE K COPPER MATERIAL. <u>ANY TIME PB IS DAMAGED OR TAMPERED WITH IN ANY WAY, THE SERVICE LINE SHALL BE REPLACED FULL LENGTH WITH TYPE K COPPER MATERIAL.</u> NOTE: FULL LENGTH IS FROM CORPORATION STOP TO METER.

15. WHEN AN EXISTING WATERLINE SHUT OUT IS NECESSARY AND POSSIBLE, THE CONTRACTOR SHALL NOTIFY THE CONSTRUCTION INSPECTOR WHO WILL THEN NOTIFY THE AUSTIN WATER DISPATCH AND THE AFFECTED CUSTOMERS A MINIMUM OF SEVENTY-TWO (72) HOURS IN ADVANCE.

16. **THE CONTRACTOR SHALL NOTIFY THE CONSTRUCTION INSPECTOR SO THAT HE CAN NOTIFY THE AUSTIN WATER AT 972--0000 AT A MINIMUM OF 72 HOURS PRIOR TO RELOCATING ANY DOMESTIC OR FIRE DEMAND WATER METERS. THE CONTRACTOR SHALL CAREFULLY REMOVE ALL METERS AND METERS BOXES THAT ARE INDICATED TO BE RELOCATED OR SALVAGED. THE CONTRACTOR SHALL INSTALL THE REMOVED METER OR CITY PROVIDED METER AT THE NEW LOCATION INDICATED ON THE CONSTRUCTION PLANS.**

17. **ALL MANHOLES IN UNPAVED AREAS PROVIDING DIRECT ACCESS TO A WASTEWATER LINE SHALL BE WATERTIGHT AND BEAR THE WORDING AND INSIGNIA FOR THE CITY OF AUSTIN.**

18. **THE CONTRACTOR SHALL VERIFY ALL VERTICAL AND HORIZONTAL LOCATIONS OF EXISTING UTILITIES PRIOR TO STARTING ONSITE UTILITY WORK.**

19. **ALL RESPONSIBILITY FOR THE ADEQUACY OF THESE PLANS REMAINS WITH THE ENGINEER WHO PREPARED THEM. APPROVAL OF THESE PLANS BY THE CITY OF AUSTIN DOES NOT REMOVE THESE RESPONSIBILITIES.**

20. **REVIEW BY AUSTIN WATER APPLIES ONLY TO FACILITIES WITHIN PUBLIC STREETS OR PUBLIC UTILITY EASEMENTS. ALL OTHER WATER, RECLAIMED WATER AND WASTEWATER FACILITIES INSIDE PRIVATE PROPERTY ARE UNDER THE JURISDICTION OF BUILDING INSPECTION.**

21. **ALL WATER, RECLAIMED WATER AND WASTEWATER MAINS SHALL BE INSTALLED IN ACCORDANCE WITH THE SEPARATION DISTANCES INDICATED IN CHAPTER 290 – DRINKING WATER STANDARDS, CHAPTER 210 – USE OF RECLAIMED WATER AND CHAPTER 217 – DESIGN CRITERIA FOR SEWERAGE SYSTEMS, OF TCEQ RULES.**

22. **CONTRACTOR'S PERSONNEL THAT PERFORM BUTT FUSION AND ELECTROFUSIONON ON OR TO HDPE PIPE AND FITTINGS MUST HAVE CURRENT QUALIFICATION TRAINING CERTIFICATE ISSUED BY MCELROY OR COMPARABLE TRAINING PROGRAM.**

23. **SHOP DRAWINGS SHALL BE SUBMITTED FOR AW APPROVAL FOR LARGE DIAMETER PRE-CAST MANHOLES, JUNCTION BOXES, WET WELLS, AND SIMILAR STRUCTURES. THE SHOP DRAWINGS SHALL INCLUDE FLOWLINE ELEVATIONS OF ALL INCOMING AND OUTGOING PIPES, ELEVATION OF TRANSITION FROM LARGE DIAMETER SECTIONS TO 48" ID SECTION, TOP OF MANHOLE ELEVATION, SURROUNDING GROUND ELEVATION, AS WELL AS SPECIAL CONSTRUCTION CONSIDERATIONS THAT ARE SPECIFIED IN THE CONTRACT DRAWINGS.**

24. **VALVE STEM EXTENSIONS SHALL CONSIST OF A SINGLE PIECE OF IRON ROD OF THE REQUIRED LENGTH WITH A SOCKET ON ONE END AND NUT ON THE OTHER.**

25. **ASBESTOS CONCRETE PIPE (AC PIPE) HAS BEEN INSTALLED IN THE PAST AS PART OF AUSTIN WATER'S WATER DISTRIBUTION AND WASTEWATER COLLECTION SYSTEMS. AUSTIN WATER'S INFRASTRUCTURE INCLUDES AC PIPE THAT IS CURRENTLY IN SERVICE AS WELL AS AC PIPE THAT HAS BEEN ABANDONED AND IS NO LONGER IN SERVICE. RECORD INFORMATION MAY NOT BE COMPLETE FOR THE PROJECT. CONTRACTORS AND SUBCONTRACTORS MUST BE ALERT TO THE POSSIBLE PRESENCE OF AC PIPE WITHIN THE LIMITS OF THE PROJECT AND BE KNOWLEDGEABLE OF HOW TO IDENTIFY IT. DISTURBANCE, REMOVAL OR CUTTING OF ASBESTOS CONTAINING PIPE IS TO BE CONDUCTED IN ACCORDANCE WITH THE REQUIREMENTS OF TEXAS ADMINISTRATIVE CODE 25, SECTION 15, ARTICLE 4477-3A AND 29 CFR 1926.1101. CONTACT THE CITY OF AUSTIN ASBESTOS MANAGER AT 512-974-7154 THIRTY (30) DAYS PRIOR TO THE PLANNED DISTURBANCE OF THE AC PIPE. ONLY STATE LICENSED PERSONNEL ARE PERMITTED TO DISTURB, REMOVE, TRANSPORT AND DISPOSE OF AC PIPE.**