CITY OF AUSTIN
PUBLIC WORKS DEPARTMENT

PROJECT MANUAL
Contract Documents and Technical Specifications

VOLUME 1 of 2

Bus Shelter Improvements

C.I.P. ID NO: 6001.107
I.F.B. NO: IFB6100 CLMC622
F.D.U. NO: 4912-8107-C500
ABIA Project No.: LC500

Austin-Bergstrom International Airport
Department of Aviation

RS&H – Engineer
8140 North MoPac Expy
Building 2, Suite 100
Austin, TX 78759

Managing Department
CITY OF AUSTIN
Public Works Department
PO Box 1088
Austin, TX 78767

September 12, 2016

Bus Shelter Improvements

Project Manual – Bid Documents

Volume 1 of 2

Austin-Bergstrom International Airport

CIP ID No. 6001.107
FDU No. 4912-8107-C500
IFB No. CLMC622
ABIA Project No. LC500

RS&H
8140 N. Mopac Expressway
Building 2, Suite 100
Austin, Texas 78759
F-3401
RESPONSIBLE FOR:
GENERAL/CIVIL
BYRON CHAVEZ, PE REGISTRATION NO. 112095
STRUCTURAL
CHRIS RHOADES, PE REGRISTRATION NO. 111868
ARCHITECTURAL
FRANK GRATTON, AIA REGISTRATION NO. 11535

STATE OF TEXAS
BYRON CHAVEZ
112095
LICENSED
PROFESSIONAL ENGINEER
8/25/2016

REGISTERED ARCHITECT
FRANK JAMES GRATTON
11535
STATE OF TEXAS
08/10/16

STATE OF TEXAS
CHRISTOPHER RHOADES
111868
LICENSED
PROFESSIONAL ENGINEER
8/10/2016

ENCOTECH
ENGINEERING CONSULTANTS
8500 Bluffstone Cove
Suite B-103
Austin, Texas 78759
F-1141
RESPONSIBLE FOR:

ELECTRICAL
SHARON BICKFORD, PE REGISTRATION NO. 77390

STATE OF TEXAS
SHARON S. BICKFORD
77390
LICENSED
PROFESSIONAL ENGINEER
8/10/16

Document Number		Title
VOLUME 1		
INTRODUCTORY INFORMATION		
	05/06/11	Title Page
	07/06/16	Table of Contents
BIDDING REQUIREMENTS, CONTRACT FORMS, & CONDITIONS OF THE CONTRACT		
Pre-Bid Information		
00020	01/15/16	Invitation for Bids
Instructions to Bidders		
00100	06/01/16	Instructions to Bidders
Information Available to Bidders		
00220	05/06/11	Geotechnical Data
Bid Forms		
00300L	06/01/16	Bid Form (Lump Sum)
Supplements to Bid Forms		
00405	09/25/05	Certificate of Non-Suspension or Debarment
00410	01/15/16	Statement of Bidder's Safety Experience
00440	10/19/15	Affidavit - Prohibited Activities
00475	05/11/15	Nonresident Bidder Provisions
Agreement Form		
00500	1/15/16	Agreement
Bonds and Certificates		
00610	02/23/10	Performance Bond
00620	02/23/10	Payment Bond
00630	05/11/15	Nondiscrimination Certificate
00631	03/06/14	Title VI Assurances Appendix A
00650	06/01/16	Certificate of Insurance
00670	03/20/14	Sales Tax Exemption Certificate
00680	06/05/06	Non-Use of Asbestos Affidavit (Prior to Construction)
00681	06/05/06	Non-Use of Asbestos Affidavit (After Construction)
General Conditions		
00700	05/03/16	General Conditions
Supplementary Conditions		
00810	01/15/16	Supplemental General Conditions
00820	01/15/16	Modifications to Bidding Requirements and Contract Forms
00830	05/03/16	Wage Rates and Payroll Reporting
00830BC	07/06/16	Wage Rates Building Construction Trades
Addenda		
00900	01/15/16	Addendum

Document Number		Title

SPECIFICATIONS

Division 1 - General Requirements

01010	04/22/13	Summary of Work
01025	08/25/16	Measurement and Payment
01041	08/27/15	Coordination Requirements for Airport Construction Work
01095	07/21/03	Reference Standards and Definitions
01200	08/09/12	Project Meetings
01300	04/22/13	Submittals
01352	04/22/13	Sustainable Construction Requirements
01353	08/09/12	Construction Equipment Emissions Reduction Plan
01500	08/09/12	Temporary Facilities
01505	04/22/13	Construction and Demolition Waste Management
01550	08/09/12	Public Safety and Convenience
01555	01/08/16	Airport Security Requirements
01900	03/12/12	Prohibition of Asbestos Containing Materials
01900a	06/05/06	Statement of Non-Inclusion of Asbestos Containing Material (E/A Prior to Design)
01900b	06/05/06	Statement of Non-Inclusion of Asbestos Containing Material (E/A After Design)

City Standard Technical Specifications

104S	09/26/12	Removing Portland Cement Concrete
111S	09/26/12	Excavation
201S	08/20/07	Subgrade Preparation
403S	09/26/12	Concrete for Structures
406S	09/26/12	Reinforcing Steel
803S	11/15/11	Barricades, Signs and Traffic Handling

Special Provisions to City Standard Technical Specifications

SP-001	08/10/16	Measurement and Payment of the CoA Standard Technical Specifications

Special Specifications

Division 02 – Site Construction

02466	08/10/16	Drilled Piers

Division 05 – Metals

05120	08/10/16	Structural Steel
05121	08/10/16	Architecturally Exposed Structural Steel Framing
05730	08/10/16	Ornamental Formed Metal

Division 06 – Woods and Plastics

06066	08/10/16	Acrylic Panel Translucent Resin Panel System

Division 07 – Thermal and Moisture Protection

07920	08/10/16	Joint Sealants

Division 09 – Finishes

09911	08/10/16	Exterior Painting
09960	08/10/16	High Performance Coatings

Division 12 – Furnishings

129343	08/10/16	Benches

Document Number		Title
Division 16 – Electrical		
16051	08/10/16	Common Work Results for Electrical
16060	08/10/16	Grounding and Bonding
16120	08/10/16	Conductors and Cables
16130	08/10/16	Raceways
16135	08/10/16	Boxes
16140	08/10/16	Wiring Devices
16510	08/10/16	Lighting
VOL. 2	10/09/00	**MBE/WBE Procurement Program Package**

END

Following is a summary of information for this Project. Bidder is cautioned to refer to other sections of the Project Manual, Drawings and Addenda (Bid Documents) for further details.

The City of Austin, hereafter called OWNER, is requesting sealed written Bids for furnishing all labor, materials, equipment, supervision, and incidentals, and for performing all Work required for the following Project:

Bus Shelter Improvements

Located at: **Austin-Bergstrom International Airport**

CIP ID# **6001.107** IFB# **CLMC622**

The Work consists of erecting a steel structure to serve as a bus shelter. Specific work elements include, but are not limited to, removal of existing sidewalk pavement, construction of drilled pier and spread footings, installation of acrylic panels, installation of conduit runs for electrical and communication cables, installation of LED lighting on the structure, installation of a touch screen monitor, installation of electrical outlets, installation of lighting communication, installation of benches and lean bars.

Bid Documents may be obtained at One Texas Center, 505 Barton Springs Road, Ste. 1045-B, Austin, TX 78704. Copies will be available in CD format at no cost.

At the time Bid Documents are obtained, Bidder must provide a working e-mail address, so that they will receive any addenda or clarification issued by the Owner.

Sealed Bids will be received at the Capital Contracting Office, One Texas Center, 505 Barton Springs Rd., Suite 1045-C, Austin, Texas 78704 and then publicly opened and read aloud in the **SUITE 1045-C, Congress Conference Room**.

ALL BIDS ARE DUE PRIOR TO (Austin time) 10:30 AM October 6, 2016.

ALL COMPLIANCE PLANS ARE DUE PRIOR TO (Austin time) 2:30 PM October 6, 2016.

BIDS WILL BE OPENED AT (Austin time) 2:30 PM October 6, 2016.

ALL BIDS AND COMPLIANCE PLANS NOT RECEIVED PRIOR TO THE DATE AND TIME SET FORTH ABOVE WILL NOT BE ACCEPTED FOR CONSIDERATION. The time stamp clock in **SUITE 1045-C** is the time of record and is verified with www.time.gov, the official U.S. time.

All CONTRACTORS must be registered to do business with OWNER prior to the Contract Award. All Subcontractors must be registered with the OWNER prior to execution of a contract. Prime Contractors are responsible for ensuring that their Subcontractors are registered as vendors with the City of Austin. Registration can be done through the OWNER's on-line Vendor Registration system. Log onto https://www.ci.austin.tx.us/vss/Advantage and follow the directions.

All City procurements are subject to the City's Minority-Owned and Women-Owned Business Enterprise Procurement Program found at Chapter 2-9-A of the City Code, as amended. The Program provides Minority-Owned and Women-Owned Business Enterprises (MBEs/WBEs) or Disadvantaged Business Enterprises (DBEs) full opportunity to participate in all City contracts. Goals for MBE/WBE or DBE participation are stated for each solicitation. Information on achieving the goals or documenting good faith efforts to achieve the goals are contained in the MBE/WBE Procurement Program Package or DBE Procurement Program Package attached to the solicitation. When goals are established, Bidders are required to complete and return the MBE/WBE or DBE Compliance Plan with their Bid. If a Compliance Plan is not submitted prior to the date and time

set forth in the solicitation, the Bid will not be accepted for consideration. (See Section 00820 for MBE/WBE requirements on "no goal" solicitations.)

All Bids shall be accompanied by an acceptable Bid guaranty in an amount of not less than five percent (5%) of the total Bid, as specified in Section 00100, Instructions To Bidders.

Performance and payment bonds when required shall be executed on forms furnished by OWNER. Each bond shall be issued in an amount of one hundred percent (100%) of the Contract Amount by a solvent corporate surety company authorized to do business in the State of Texas, and shall meet any other requirements established by law or by OWNER pursuant to applicable law.

Minimum insurance requirements are specified in Section 00810, Supplemental General Conditions.

Minimum wage rates have been established and are specified in Section 00830, Wage Rates and Payroll Reporting.

Contract Time is of the essence and all Work shall be substantially completed within One Hundred Ten (110) Calendar Days after date specified in the Notice to Proceed, in accordance with the Bid Form, Section 00300. Final completion shall be achieved within 30 Calendar Days after substantial completion. Liquidated damages are $460 per Calendar Day for failure to substantially complete the work and $240 per Calendar Day for failure to achieve final completion within 30 Calendar Days after substantial completion, in accordance with the Bid Form, Section 00300.

OWNER reserves the right to reject any or all Bids and to waive any minor informality in any Bid or solicitation procedure (a minor informality is one that does not affect the competitiveness of the Bid).

A mandatory Pre-Bid Conference will be held on **September 19th, 2016** (date) at **12:30 PM** (time)

(Austin time) at **2716 Spirit of Texas Drive, Room 174C, Austin, TX 78719.** (location)

Attendance is mandatory unless otherwise stated. Bidders must attend any mandatory Pre-Bid Conference and are encouraged to attend any non-mandatory Pre-Bid Conference to ensure their understanding of Owner's bidding and contracting requirements, particularly MBE/WBE Procurement Program requirements. If the Pre-Bid Conference is mandatory the Bidder must arrive and sign-in within fifteen (15) minutes of the scheduled start time of the meeting, otherwise the Bidder will not be allowed to submit a Bid for the project.

The persons listed below may be contacted for information regarding the Invitation for Bid. If the Bidder contacts any other City employee, including Council Members and members of Boards and Commissions, the Bidder may be found in violation of Ordinance No. 20111110-052, dated November 10, 2011, regarding Anti-Lobbying and Procurement. The text of that Ordinance may be viewed at http://www.cityofaustin.org/edims/document.cfm?id=161145.

AUTHORIZED CONTACT PERSONS

PROJECT MANAGER: David Smythe-Macaulay

Telephone (512) 974-7152

Email david.smythe-macaulay@austintexas.gov

CONTRACT COMPLIANCE REP.: Lynn Rich

Telephone (512) 974-7009

Email lynn.rich@austintexas.gov

END

1. Preparation of Bid

a. **Bid Documents.** Each Bidder must prepare its Bid in ink on forms furnished by OWNER or as otherwise specified or permitted. Blank spaces for each item in Bid form must be filled. Bidder must submit a price for each item in Bid. In case of conflict between unit prices and extensions, unit prices shall govern. The Bid must be executed in the complete and correct legal name of individual, partnership, firm, corporation or other legal entity constituting the Bidder.

b. **Vendor Registration.** All CONTRACTORS must be registered to do business with OWNER prior to Contract Award. All Subcontractors must be registered with the OWNER prior to execution of a contract. Prime Contractors are responsible for ensuring that their Subcontractors are registered as vendors with the City of Austin. Registration can be done through the OWNER's on- line Vendor Registration system. Log onto https://www.ci.austin.tx.us/vss/Advantage and follow the directions.

c. **Pre-Bid Conference.** Unless otherwise notified, Bidders must attend the Pre-Bid Conference to ensure their understanding of OWNER's bidding and contracting requirements, particularly MBE/WBE Procurement Program requirements.

d. **Sales Tax Exemption.** The Owner is a tax-exempt organization as defined by Chapter 11 of the Property Tax Code of Texas. Bid prices shall not include sales tax on materials, supplies, or equipment that are incorporated into the real property interest of the OWNER or are otherwise completely used and consumed in the performance of the Contract. OWNER will furnish CONTRACTOR with a Sales Tax Exemption Certificate to be issued to Suppliers in lieu of the tax.

e. **Minimum Wages.** Workers on Project shall be paid not less than wage rates, including fringe benefits, as published by the Department of Labor (DOL) for Building Construction and Heavy and Highway Trades "AS APPLICABLE" and/or the $13.03 minimum wage required by City of Austin Ordinance No. 20160324-015, whichever is higher. The Total Minimum Wage required can be met using any combination of cash and non-cash qualified fringe benefits provided the cash component meets or exceeds the $13.03 minimum wage required.

f. **Addenda.** Bidder shall be knowledgeable of all Addenda issued and shall acknowledge all Addenda in spaces provided on Bid form. Further information regarding the Bid documents and the Project may be obtained from the Project Manager listed at the end of Section 00020, Invitation for Bids.

g. **Required Items.** Bids must include all specified items in this section and be submitted in accordance with paragraph No. 7 below. Any additional requirement to the bid submittal is specified in Section 00820. Any corrections to a Bid shall be initialed by the person signing the Bid.

h. **Professional Services.** Bidders must secure any required professional services that are defined as professional services under the Professional Services Procurement Act, Chapter 2254 of the Texas Government Code (for example: registered professional land surveyors and professional engineers) using the qualifications based selection process prescribed by that chapter. (Note: It is a violation of State Law to solicit Bids for professional services.)

i. **Further Information.** Prospective Bidders desiring further information or

interpretation of Project Manual or Drawings must make a written request for such information to OWNER addressed to the Authorized Contact Person listed in Section 00020 no later than seven (7) Working Days before Bid opening. Interpretation of Project Manual or Drawings will be made by Addendum only and a copy of each Addendum will be provided to each person to whom a set of Bid Documents has been furnished. Any verbal communications will not be binding on the OWNER.

j. **Anti-Lobbying and Procurement.** Article 6, Chapter 2-7, Austin City Code, prohibits lobbying activities or representations by the Bidder between the date that the Invitation for Bid (IFB) is issued and the date of contract execution. The text of the pertinent City Ordinance may be viewed at http://www.cityofaustin.org/edims/document.cfm?id=161145.

(1) Definitions

(A) "Agent" means a person authorized by a bidder to act for or in place of bidder, including a person acting at the request of bidder, a person acting with the knowledge and consent of a bidder, or a person acting with any arrangement, coordination, or direction between the person and the bidder.

(B) "Authorized Contact Person" means the Project Manager listed in Section 00020, IFB, or other persons specifically identified in the IFB as the contact regarding the solicitation, or the authorized contact person's designee during the course of the no-contact period.

(C) "City Employee" means a person employed by the City.

(D) "City Official" is defined in Section 2-7-2 of the City Code.

(E) "No-Contact Period" means the period of time from the date the IFB is issued until a contract is executed. If the City withdraws the IFB or rejects all bids with the stated intention to reissue the same or a similar IFB for the same or similar project, the no-contact period continues during the time period between the withdrawal and reissue.

(F) "Response" means a bid.

(G) "Respondent" means a bidder. The term "respondent" also includes:

(i) an owner, board member, officer, employee, contractor, subsidiary, joint enterprise, partnership, agent, lobbyist, or other representative of a bidder;

(ii) a person or representative of a person that is involved in a joint venture with the bidder, or a subcontractor in connection with the bidder's bid; and

(iii) a bidder who has withdrawn a bid or who has had a bid rejected or disqualified by the City.

(H) "Representation" means a communication related to a bid to a council member, official, employee, or City representative that is intended to or that is reasonably likely to:

(i) provide information about the bid;

(ii) advance the interests of the bidder;

(iii) discredit the bid of another bidder;

(iv) encourage the City to withdraw the IFB;

(v) encourage the City to reject all of the bids;

(vi) convey a complaint about a particular bid; or

(vii) directly or indirectly ask, influence, or persuade any City official, City employee, or body to favor or oppose, recommend

or not recommend, vote for or against, consider or not consider, or take action or refrain from taking action on any vote, decision, or agenda item regarding the solicitation.

(I) "Solicitation" means an opportunity to compete to conduct business with the City that requires City Council approval under City Charter Article VII Section 15 (Purchase Procedure).

(J) "City" means Owner.

(2) Restriction on Contacts.

(A) During a no-contact period, a bidder shall make a representation only through the authorized contact person.

(B) During the no-contact period, a bidder may not make a representation to a City official or to a City employee other than to the authorized contact person. This prohibition also applies to a vendor that makes a representation and then becomes a bidder.

(C) The prohibition of a representation during the no-contact period applies to a representation initiated by a bidder, and to a representation made in response to a communication initiated by a City official or a City employee other than the authorized contact person.

(D) If the City withdraws an IFB or rejects all bids with a stated intention to reissue the same or similar IFB for the same or similar project, the no-contact period shall expire after the ninetieth day after the date the IFB is withdrawn or all bids are rejected if the IFB has not been reissued during the ninety day period.

(E) The no-contact period shall expire when the first of the following occurs: contract is executed or solicitation is cancelled.

(F) The purchasing officer or the Capital Contracting Office Director may allow bidders to make representations to city employees or city representatives in addition to the authorized contact person for a solicitation that the purchasing officer or the Capital Contracting Office Director finds must be conducted in an expedited manner; an expedited solicitation is one conducted for reasons of health or safety under the shortest schedule possible with no extensions. The purchasing officer's or Capital Contracting Office Director's finding and additional city employees or city representatives who may be contacted must be included in the solicitation documents.

(G) Representations to an independent contractor hired by the City to conduct or assist with a solicitation will be treated as representations to a City employee.

(H) A current employee, director, officer, or member of a bidder, or a person related within the first degree of consanguinity or affinity to a current employee, director, officer or member of a bidder, is presumed to be an agent of the bidder for purposes of making a representation. This presumption is rebuttable by a preponderance of the evidence as determined by the purchasing officer or Capital Contracting Office Director.

(I) A bidder's representative is a person or entity acting on a bidder's behalf with the bidder's request and consent. For example, a bidder may email their membership list and ask members to contact council members on the bidder's behalf. The members are then acting per bidder's request and with their consent, and the members have become bidder representatives.

(3) Permitted Representations

(A) If City seeks additional information from bidder, the bidder shall submit the

representation in writing only to the authorized contact person. The authorized contact person will then distribute the written representation in accordance with the terms of the IFB. A bidder cannot amend or add information to a bid after the bid deadline.

(B) If bidder wishes to send a complaint to the City, the bidder shall submit the complaint in writing only to the authorized contact person. The authorized contact person will then distribute a complaint regarding the process to members of the city council or members of the City board, to the Capital Contracting Office Director, and to all bidders on the IFB. However, the Capital Contracting Office Director or purchasing officer shall not permit distribution of any complaint that promotes or disparages the qualifications of a bidder, or that amends or adds information to a bid. A determination of what constitutes promoting or disparaging the qualifications of a bidder or constitutes amending or adding information is at the Capital Contracting Office Director's or purchasing officer's sole discretion. Bid protests are not subject to this subsection. Documents related to a bid protest may not be forwarded to council under this subsection.

(C) If a bidder submits a written inquiry regarding an IFB, the authorized contact person will provide a written answer and distribute both the inquiry and answer to all bidders on the IFB.

(D) If a bidder does not receive a response from the authorized contact person, the bidder may contact the Capital Contracting Office Director or purchasing officer as appropriate.

(E) A bidder may ask a purely procedural question, for example a question regarding the time or location of an event, or where information may be obtained, of a City employee other than the authorized contact person. This provision does not permit a bidder to make suggestions or complaints about the contract process that constitute a representation to a City employee other than the authorized contact person. Notwithstanding this provision, a bidder may not ask a procedural question of a councilmember, a councilmember's aide, or of a City board member except in a meeting held under the Texas Government Code, Chapter 551 (Open Meetings Act).

(F) Article 6 of the City Code allows representations:

(i) made at a meeting convened by the authorized contact person, including meetings to evaluate bids or negotiate a contract;

(ii) required by Financial Services Department protest procedures for vendors;

(iii) made at a Financial Services Department protest hearing;

(iv) provided to the Small & Minority Business Resources Department in order to obtain compliance with Chapter 2-9A-D (the Minority-Owned and Women-Owned Business Enterprise Procurement Program);

(v) made to the City Risk Management coordinator about insurance requirements for a bid;

(vi) made in public at a meeting held under the Texas Open Meetings Act; or

(vii) made from a bidder's attorney to an attorney in the Law Department in compliance with Texas Disciplinary Rules of Professional Conduct.

(G) Communication regarding the solicitation is permitted between or among City officials or City employees acting in their official capacity.

(H) A contribution or expenditure as defined in Chapter 2-2 (Campaign Finance)

is not a representation.

(4) Contract Voidable.

If a contract is awarded to a bidder who has violated these Anti- Lobbying & Procurement provisions, the contract is voidable by the Owner.

(5) Debarment.

If a bidder has been disqualified under these provisions more than two times in a sixty month period, the purchasing officer shall debar the bidder from bidding for a period not to exceed three years, provided the bidder is given written notice and a hearing in advance of the debarment.

k. **City's Minority-Owned and Women-Owned Business Enterprise / Disadvantaged Business Enterprise (MBE/WBE or DBE) Program Requirements. Good Faith Efforts.** When a bidder cannot achieve the MBE/WBE or DBE goals or subgoals established for the project, the bidder must document its Good Faith Efforts to meet the goals or subgoals. Good Faith Effort evaluations will consider, at a minimum, the bidder's efforts to do the following:

(1) Soliciting through at least two reasonable, available and verifiable means MBEs/WBEs within the Significant Local Business Presence boundaries at least seven (7) business days prior to the bid opening date to allow the MBEs/WBEs or DBEs to respond to the bid.

(2) Providing interested MBEs/WBEs or DBEs adequate information about the bid documents and requirements, including addenda, in a timely manner to assist them in responding to the bid.

(3) Negotiating in good faith with interested MBEs/WBEs DBEs that have submitted bids to the bidder.

(4) Publishing notice in a local publication such as a newspaper, trade association publication or via electronic/social media.

(5) Not rejecting MBEs/WBEs or DBEs as being unqualified without sound reasons based on a thorough investigation of their capabilities.

(6) Making economically feasible portions of the work available to MBE/WBE or DBE subcontractors and suppliers and to select those portions of the work or material needs consistent with the available MBE/WBE or DBE subcontractors and suppliers, so as to facilitate meeting the goals or subgoals.

(7) The ability or desire of the bidder to perform the project work with its own organization does not relieve the bidder of the responsibility to make Good Faith Efforts.

(8) Bidders are not required to accept higher quotes in order to meet the goals or subgoals.

(9) Effectively using the services of Minority Person/Women community organizations; Minority Person/Women Contractors groups; local, state and federal Minority Person/Women business assistance offices; and other organizations to provide assistance in solicitation and utilization of MBEs, WBEs and/or DBEs.

(10) In assessing minimum Good Faith Efforts, the OWNER may consider (1) whether the bidder sought guidance from the City of Austin Small and Minority Business Resources Department (SMBR) on any question regarding compliance with these requirements; and (2) the performance of other bidders in meeting the goals.

For additional information, refer to the MBE/WBE or DBE Compliance Program Requirements Volume of the Project Manual.

Bid shopping is not allowed in conjunction with this solicitation and may result in the disqualification of prospective bidders and subcontractors.

2. Estimates of Quantities (Unit Price Contracts Only)

Quantities listed in unit price Bid form are to be considered approximate quantities and will be used only for comparison of Bids. Payment to CONTRACTOR will be made only for actual quantities of Work performed or materials furnished in accordance with Contract and it is understood that quantities may be increased or decreased as provided in Section 00700, General Conditions, and as may be modified by Section 00810, Supplemental General Conditions.

3. Drawings, Project Manual and Site (s) of Work

Before submitting a Bid, the Bidder shall carefully examine the Bid Documents, site(s) of the proposed Work, soils, and other conditions that may affect the performance of the Work to satisfy the Bidder as to character, quality and quantities of Work to be performed and materials to be furnished. By submitting a Bid, the Bidder will be deemed to have certified that the Bidder has complied with these requirements. If, during preparation of the Bid, the Bidder discovers any suspected discrepancies or errors, the Bidder must immediately notify the Authorized Contact Person in writing of the suspected discrepancy or error. Failure to provide written notice of any suspected discrepancies or errors may be cause for rejection of the Bid.

4. Bid Guaranty

All Bids shall be accompanied by a Bid guaranty in an amount of not less than five percent (5%) of the total Bid. If the total Bid amount is $100,000 or less, Bidder has the option of providing a cashier's or certified check, made payable to City of Austin accompanied by a letter from a surety company indicating that Bidder can be bonded for the amount of the Project, or a Bid bond with Power of Attorney attached, issued by a solvent surety authorized under laws of the State of Texas and acceptable to OWNER. If the total Bid amount exceeds $100,000, the only acceptable Bid guaranty will be a Bid bond with Power of Attorney attached, issued by a solvent surety authorized under laws of the State of Texas and acceptable to OWNER.

The Bid guaranty accompanying the Bid of the three (3) apparent low Bidders will be retained until Contract is awarded and successful Bidder executes Contract and furnishes required bonds and insurance, after which Bid guaranty will be returned to the Bidders. All other Bid guaranties will be returned after Bid certification. In the event that the Bidder to whom the Contract is awarded fails to timely execute the Contract, the Bidder agrees that the OWNER in its discretion may rescind the initial award and award the Contract to the next lowest responsible Bidder.

5. Performance and Payment Bonds

When performance and/or payment bonds are required, each shall be issued in an amount equal to the Contract Amount as security for the faithful performance and/or payment of all Contractor's obligations under the Contract Documents. Performance and payment bonds shall be issued by a solvent corporate surety authorized to do business in the State of Texas, and shall meet any other requirements established by law or by OWNER pursuant to applicable law.

6. Consideration of Bid Amount

For purpose of award, after Bids are opened, read aloud, reviewed, and certified, the total

amount of the Bid, including accepted Bid alternates, will be considered the amount of the Bid. Upon request, certified Bid tabulations will be made available to the public. OWNER reserves the right to reject any or all Bids and to waive any minor informality in any Bid or solicitation procedure (a minor informality is one that does not affect the competitiveness of the Bids).

7. Submission of Bid

Each Bid must be completed and signed by person(s) authorized to bind individual, partnership, firm, corporation, or any other legal entity submitting the Bid, and, shall include the following in one envelope furnished by OWNER:

(a) One copy of Bid form (Section 00300L or 00300U) completed and signed.
(b) Acknowledgment of receipt of Addenda issued in spaces provided in Bid form.
(c) Required Bid guaranty.
(d) Copy of statement of legal entity status, as applicable, including but not limited to, as applicable, Statement of Sole Proprietorship, Articles of Partnership or Incorporation and resolution, or corporate board minutes, empowering signatory to bind Bidder, attested to by an officer of Bidder. The required information is set forth in Section 00100, Paragraph 15.
(e) One copy of the Insurance Cost Form (Section 00425A), completed and signed (ROCIP projects only).
(f) One copy of the Affidavit - Prohibited Activities (Section 00440), completed and signed.
(g) One copy of the Nonresident Bidder Provisions (Section 00475), completed and signed.
(h) One copy of the Nondiscrimination Certificate (Section 00630), completed and signed.
(i) Required information indicated in Drawings or Project Manual.

Bid must be accompanied by a MBE/WBE or DBE Compliance Plan, signed by the authorized representative described above, that should be submitted separately in a second envelope furnished by OWNER, or other appropriate packaging accompanied by the furnished envelope, prior to the date and time set forth in Section 00020, Invitation for Bids. The Compliance Plan forms are included in the MBE/WBE Procurement Program Package or DBE Procurement Program Package (a separately bound volume).

Bid shall include all specified items in this section and be placed in envelopes furnished by OWNER, or other appropriate packaging, accompanied by and attached to the OWNER furnished envelopes, sealed and clearly identified on outside as a Bid to OWNER, with Bidder's name and address, and project name. Failure to submit Bid appropriately may subject Bidder to disqualification. Bid may be mailed or delivered (in person or by Federal Express, Express Mail or other delivery service) to:

City of Austin
Capital Contracting Office
One Texas Center
505 Barton Springs Rd.
Suite 1045-C
Austin, Texas 78704

When sent by mail, Federal Express, Express Mail, or other delivery service, sealed Bid (marked as indicated above) shall be enclosed in an additional envelope, or other appropriate packaging, clearly identified on outside as a Bid to OWNER with Bidder's name and address, Project name, and Bid date and time. It is the sole responsibility of the Bidder to ensure timely delivery of Bid. OWNER will not be responsible for failure of service on the part of the U.S. Post Office, courier services, or any other form of

delivery service chosen by the Bidder. (See Section 00820, Modifications to Bidding Requirements and Contract Forms, for modifications to solicitations without MBE/WBE or DBE goals.)

In submitting its Bid, Bidder certifies that it has not lobbied the City or its officials, managers, employees, consultants, or contractors in such a manner as to influence or to attempt to influence the bidding process. In the event it reasonably appears that the Bidder influenced or attempted to influence the bidding process, the City may, in its discretion, reject the Bid.

8. Withdrawal of Bid

A Bid may be withdrawn by a Bidder, provided an authorized individual of the Bidder submits a written request to withdraw the Bid prior to the time set for opening the Bids.

9. Rejection of Bids

A. The following **will** be cause to reject a Bid:

(1) Failure to submit Section 00300 (Bid Form) and signed by an individual empowered to bind the Bidder.

(2) Bids which are not accompanied by acceptable Bid guaranty, with Power of Attorney attached, or a letter certifying the Bidder's ability to be bonded, from a surety company, in accordance with Paragraph 4 above.

(3) More than one Bid for same Work from an individual, firm, partnership or corporation.

(4) Evidence of collusion among Bidders.

(5) Sworn testimony or discovery in pending litigation with OWNER which discloses misconduct or willful refusal by contractor to comply with subject contract or instructions of OWNER.

(6) Failure to submit MBE/WBE or DBE Compliance Plan in accordance with the separately bound volume titled MBE/WBE Procurement Program Package or DBE Procurement Program Package.

(7) Failure to have an authorized agent of the Bidder attend the mandatory Pre- Bid Conference, if applicable.

(8) Bids received from a Bidder who has been debarred or suspended by OWNER's Purchasing Officer.

(9) Bids received from a Bidder when Bidder or principals are currently debarred or suspended by Federal, State or City governmental agencies. (Applicable for Bid amounts equal to or in excess of $25,000.00).

(10) Failure to submit any of the items specified above in paragraph 7, "Submission of Bid".

B. The following **may** be cause to reject a Bid:

(1) Poor performance in execution of work under a previous City of Austin contract.

(2) Failure to achieve reasonable progress on an existing City of Austin contract.

(3) Default on previous contracts or failure to execute Contract after award.

(4) Evidence of failure to pay Subcontractors, Suppliers or employees in accordance with Contract requirements.

(5) Bids containing omissions, alterations of form, additions, qualifications or conditions not called for by OWNER, or incomplete Bids may be rejected. In any case of ambiguity or lack of clarity in the Bid, OWNER reserves right to determine most advantageous Bid or to reject the Bid.

(6) Failure to acknowledge receipt of Addenda.

(7) Failure to submit any of the items specified below in paragraph 11, "Submission of Post Bid Information".

(8) Failure to identify a dollar amount (price) of a unit price(s) in the 00300U

(9) Failure to submit post-Bid information within the allotted time(s) (see paragraph 11 for post-Bid requirements)

(10) Failure to timely execute Contract after award.

(11) Previous environmental violations resulting in fines or citations by a governmental entity (i.e. U.S. Environmental Protection Agency, Texas Commission on Environmental Quality, etc.).

(12) Safety record as set forth in Section 00410, Statement of Bidder's Safety Experience.

(13) Failure of Bidder to demonstrate the minimum experience required as specified in Section 00400 if that Section is included in the bidding documents.

(14) Evidence of Bidder's lack of sufficient resources, workforce, equipment or supervision, if required by inclusion of appropriate attachments in Section 00400.

(15) Evidence of poor performance on previous Projects as documented in Owner's project performance evaluations.

(16) Unbalanced Unit Price Bid: "Unbalanced Bid" means a Bid, which includes a Bid that is based on unit prices which are significantly less than cost for some Bid items and significantly more than cost for others. This may be evidenced by submission of unit price Bid items where the cost are significantly higher/lower than the cost of the same Bid items submitted by other Bidders on the project.

10. Protest Procedures

The OWNER's Capital Contracting Office Director has the authority to settle or resolve any claim of an alleged deficiency or protest. The procedures for notifying OWNER of an alleged deficiency or filing a protest are listed below. If you fail to comply with any of these requirements, the Capital Contracting Office Director may dismiss your complaint or protest.

Prior to Bid opening: If you are a prospective Bidder and you become aware of the facts regarding what you believe is a deficiency in the solicitation process before the Bid is opened, you must notify OWNER in writing of the alleged deficiency before that date,

giving OWNER an opportunity to resolve the situation prior to the Bid opening.

After Bid opening: If you submit a Bid to OWNER and (1) you have been found non-responsive, or
(2) you believe that there has been a deficiency in the solicitation process or the award, you have the opportunity to protest the solicitation process or the recommended award as follows:

1. You must file written notice of your intent to protest within four (4) calendar days of the date that you know or should have known of the facts relating to the protest. If you do not file a written notice of intent within this time, you have waived all rights to protest the solicitation process or the award.
2. You must file your written protest within fourteen (14) calendar days of the date that you know or should have known of the facts relating to the protest unless you know of the facts before the Bid has been opened. If you know of the facts before that date, you must notify OWNER as stated above.
3. You must submit your protest in writing and must include the following information:
    a. your name, address, telephone, and email address;
    b. the solicitation number and the CIP number, if applicable;
    c. a detailed statement of the factual grounds for the protest, including copies of any relevant documents.
4. Your protest must be concise and presented logically and factually to help with OWNER's review.
5. When OWNER receives a timely written protest, the Capital Contracting Office Director will determine whether the grounds for your protest are sufficient. If the Capital Contracting Office Director decides that the grounds are sufficient, the Capital Contracting Office will schedule a protest hearing, usually within five (5) working days. If the Capital Contracting Office Director determines that your grounds are insufficient, you will be notified of that decision in writing.
6. The protest hearing is informal and is not subject to the Open Meetings Act. The purpose of the hearing is to give you a chance to present your case; it is not an adversarial proceeding. Those who may attend from OWNER are: representatives from the department that requested the purchase, the Law Department, the Capital Contracting Office, and other appropriate City staff. You may bring a representative or anyone else that will present information to support the factual grounds for your protest with you to the hearing.
7. A decision will usually be made within fifteen (15) calendar days after the hearing.
8. The Capital Contracting Office Director will send you a copy of the hearing decision after the appropriate City staff has reviewed the decision.
9. When a protest is filed, OWNER usually will not make an award until a decision on the protest is made. However, OWNER will not delay an award if the City Manager or the Capital Contracting Office Director determines that:
    a. OWNER urgently requires the supplies or services to be purchased, or
    b. Failure to make an award promptly will unduly delay delivery or performance.

In those instances, the Capital Contracting Office will notify you and make every effort to resolve your protest before the award.

The protest or notice of intent and the protest shall be submitted in writing to the following address:

City of Austin
Capital Contracting Office
ATTN: Capital Contracting Officer
One Texas Center
505 Barton Springs Rd.
Suite 1045-A
Austin, Texas 78704
PHONE: 512/974-7141

11. Submission of Post Bid Information

Prior to determination of the certified low Bidder, the three (3) apparent low Bidders must submit to OWNER the following information within three (3) business days of receipt of notice of apparent low Bidder status by the OWNER:

1. One copy of Attachments A-J and any other specifically designated Attachments of the Statement of Bidder's Experience (Section 00400), completed and signed. (Unless provided to the contrary in Section 00820 Modifications to Bidding Requirements and Contract Forms).
2. One Copy of the Certificate of Non-Suspension or Debarment (Section 00405), completed and signed. (Applicable for Bid amounts equal to or in excess of $25,000.00.)
3. One copy of Section 00410, Statement of Bidder's Safety Experience, including required attachments, completed and signed.
4. One copy of the Title VI Assurances Appendix A (Section 00631), completed and signed.
5. One copy of Exhibit A Federal Provisions (Section 00810A, pages 1-9) completed and signed. (Federal projects only)
6. Such other information as is required to evaluate Bid or Bidder.

Upon notification of status as certified low Bidder, Bidder shall submit the following information to OWNER within three (3) business days:

1. Letter(s) of intent between Bidder and all subcontractor(s) and all supplier(s) identified in the MBE/WBE Compliance Plan.
2. Section 00425B, VII Subcontractor Affidavit of Receipt and Provision of ROCIP Information (for Subcontractor(s) of all tiers identified in the MBE/WBE Compliance Plan). For ROCIP projects.
3. Such other information as required. (Note: OWNER reserves the right to solely determine whether the comparable experience documentation provided by the Bidder is sufficient and relevant to the Work described in the Contract Documents for the Bidder to be considered a responsible Bidder. In addition, the Bidder acknowledges and agrees that the failure to timely provide the additional information required by this section will result in a determination that, for the purposes of this solicitation, the Bidder has not provided sufficient information for the OWNER to be able to determine that the Bidder is a responsible Bidder.)

12. Award and Execution of Contract

OWNER will process Bids expeditiously. Award of Contract will be to the lowest, responsible Bidder meeting all requirements of the Bid Documents. OWNER may not award Contract to a nonresident Bidder unless the nonresident underbids the lowest Bid submitted by a responsible resident Bidder by an amount that is not less than the amount by which a resident Bidder would be required to underbid the nonresident Bidder to obtain a comparable contract in the state in which the nonresident's principal place of business is located.

Award of Contract will occur within the period identified on the Bid form, unless mutually agreed between the parties. Capital Contracting Office Director shall submit recommendation for award to the City Council for those project awards requiring City Council action. Contract will be signed by City Manager or his/her designee after award and submission of required documentation by Bidder. Contract will not be binding upon OWNER until it has been executed by both parties. OWNER will process the Contract expeditiously. However, OWNER will not be liable for any delays prior to the award or execution of Contract.

Upon contract award, the selected Bidder must submit either their existing or an updated personnel policy (on letterhead) documenting conformity with City Code, Chapter 5-4, § 5-4-2. If the company does not submit a copy of their personnel policy incorporating the non-discrimination policy, the City of Austin Nondiscrimination Policy (Section 00630) will be considered the Bidder's nondiscrimination policy.

In any case of ambiguity or lack of clarity in the Bid, OWNER reserves the right to determine the most advantageous Bid or to reject the Bid.

Notwithstanding anything in this Section 00100 to the contrary, the OWNER may award a contract for construction services in an amount of less than $100,000 to a bidder whose principal place of business is in the City of Austin and whose bid is within 5% of the lowest bid price received from a bidder whose principal place of business is not within the City of Austin, if the City finds that the local bidder offers the City the best combination of contract price and additional economic development opportunities for the City created by the contract award including the employment of resident of the City and increased tax revenues to the City.

13. Partnering

In order to complete the Work in a manner that is most beneficial to the OWNER and CONTRACTOR, OWNER and CONTRACTOR may form a "Partnering Team", which will include the E/A, and any major Subcontractors. This partnering relationship will draw on the strength of all parties to identify and achieve mutual goals. The objectives of this partnering relationship are effective and efficient communication and Contract performance, which is intended to ensure that the Project is completed within budget, on schedule, and in accordance with the Drawings and Specifications and other Contract requirements. While the partnering relationship will be multilateral in makeup and participation will be totally voluntary, the OWNER and CONTRACTOR agree to cooperate and use reasonable good faith efforts to discuss and resolve any and all Project issues and disputes. Section 01100, Special Project Procedures and/or Section 01200, Project Meetings contain additional information regarding the intent of the partnering relationship and responsibilities of the entities entering into the partnering charter.

14. ROCIP Requirements

If the insurance on this Project will be under the Rolling Owner Controlled Insurance Program (ROCIP), the Bidder is directed to Section 00810, Supplemental General Conditions, Section 00820, Modifications to Bidding Requirements and Contract

Forms, and the Project Safety Manual included with these contract documents for information and bidding requirements.

The Insurance Cost Form, Section 00425A, Rolling Owner Controlled Insurance Program Information Section 00425B, VI Contractor Affidavit of Receipt and Provision of ROCIP Information must be accurately completed and submitted with the Bid to indicate insurance removed from Base Bid and Alternates. CONTRACTOR shall remove from the Bid the cost of insurance for the CONTRACTOR and Subcontractors of all tiers working on site.

The Statement of Bidder's Safety Experience, Section 00410, must be accurately completed and submitted with the Bid.

The Rolling Owner Controlled Insurance Program Information, Section 00425 B, VII Subcontractor Affidavit of Receipt and Provision of ROCIP Information for subcontractor(s) of all tiers identified in the MBE/WBE Compliance Plan must be accurately completed and submitted as a post bid submittal and further Subcontractor Affidavits must be submitted throughout the duration of the Contract as Subcontractor(s) are added.

15. Signature Requirements

The Bid and any subsequent supporting Bid documents and Contract must be executed in the Bidder's full name and legal entity status by an authorized representative of the Bidder and accompanied by sufficient documentation, which clearly indicates not only the legal name and entity status of Bidder, but also the capacity and authority of the person signing on behalf of Bidder. Accordingly, a partnership/joint venture must file its partnership/joint venture agreement, a corporation must file its articles and bylaws, a limited liability company must file its certificate of organization and article of organization and regulations, and a limited partnership must file not only limited partnership agreement and the certificate of limited partnership, but also the documentation for its general partner, and any Bidder must file a copy of any assumed name certificate, or such limited portion of such documents reasonably establishing signature authority.

The following samples show the entity information and signature requirements that will apply to all Bid and contract execution documents for the type of entity indicated:

1. Individual/Sole Proprietor (sample)

   The individual/sole proprietor must sign the document in his or her personal capacity or in any assumed name capacity accompanied by a copy of any assumed name certificate.

   Name of Contractor (d/b/a, if appropriate), a sole

   proprietor By: _____

   Printed Name:_____

2. Partnership/Joint Venture (sample)

   A partner/joint venturer must sign the document in his or her capacity as a partner/joint venturer and in any assumed name capacity accompanied by a copy of the assumed name certificate, if any, and a copy of the partnership or joint venture agreement, as applicable, with additional documentation, if necessary, establishing the authority of the signatory individual.

   Name of Partnership/Joint Venture, a Texas Partnership/JV, as

appropriate By: _____

Printed or Typed Name: _____

Title:_____(Partner, managing partner, venturer, managing venturer, as approp.)
Authorized Representative

3. Corporation (sample)

An authorized officer or agent of the corporation must sign the documents on behalf of the corporation in his or her capacity as the authorized representative of the corporation accompanied by a copy of a corporate resolution and minutes granting such authority with a certificate of an officer of the corporation as to the authority of the signatory to bind the CONTRACTOR signed and dated no more than one week before the date of execution of the document.

Name of Contractor, Inc. or Co., a Texas corporation, as

appropriate By: _____

Printed or Typed Name: _____

Title:_____(Officer or Agent (as appropriate)) Authorized Representative

4. Limited Liability Company (sample)

An authorized manager or member of the LLC must sign the document in his or her capacity as a manager or member accompanied by a copy of the LLC's certificate of organization and articles of organization and regulations evidencing such person's signatory authority.

Name of Contractor, L.L.C., a Texas limited liability company,

as appropriate By:_____,

Printed or Typed Name:_____

Title:_____, (Manager or Member (as appropriate)) Authorized Representative

5. Limited Partnership (sample)

The general partner of a limited partnership must execute the documents on behalf of the limited partnership, accompanied by copy of the limited partnership agreement and the certificate of limited partnership. In addition, the signatory must sign the documents in his or her capacity as an authorized officer or agent of the corporation or member or manager of the LLC, as appropriate, accompanied by a copy of the corporate or LLC documentation stipulated above.

Name of Contractor, Ltd., a Texas limited partnership, as

appropriate By: Name of General Partner (usually a

Texas corporation or an L.L.C.) By: _____

Printed or Typed Name:_____

Title:_____Officer or Agent of

Corporation or LLC Authorized Representative

16. Contractor Evaluation

The Owner will review and evaluate the Contractor's Work and performance on the Project and provide the Contractor with a written Contractor Evaluation Report in accordance with City of Austin Administrative Rule R161-13.37. Rule R161-13.37 provides an appeal process.

http://www.austintexas.gov/department/contract-management

17. Texas Ethics Commission Certificate of Interested Parties Disclosure Form

(1) Definitions:

(A) "Interested Party" – means a person who has a controlling interest in a Business Entity with whom the Owner contacts or who actively participates in facilitating the Contract or negotiating the terms of the Contract, including a broker, intermediary, adviser, or attorney for the Business Entity.

(B) "Business Entity" – means any entity recognized by law through which business is conducted, including a sole proprietorship, partnership, or corporation.

(2) As a condition to entering the Contract, the Business Entity constituting the successful Bidder must provide a Texas Ethics Commission Certificate of Interested Parties Form to the Owner at the time the Business Entity/Bidder submits the signed Contract to the Owner in full compliance with the following requirements under which the successful Bidder shall:

(i) go to the Ethics Commission's website (www.ethics.state.tx.us),

(ii) complete the "Interested Parties" information, in accordance with the requirements of the Texas Ethics Commission Rules published at Title 1, Part 2, Chapter 46, of the Texas Administrative Code and available on the referenced website,

(iii) include the City's contract identification number,

(iv) include a short description of the goods or services to be used by the City, and

(v) indicate whether each interested party has a controlling interest in the business entity, is an intermediary in the contract for which the disclosure is being filed, or both.

(3) In accordance with the Commission Rules, the Certificate of Filing and completed Certificate of Interested Parties must be (i) printed, (ii) signed by an authorized agent of the business entity, and (iii) submitted to the City at the time of the submission of the signed contract to the City. The City then must notify the Ethics Commission in electronic format of receipt of the document within 30 days of contracting and the Commission will make the disclosure of interested parties available to the public on its website.

End

Geotechnical Data

Section 00220

Depending on Project requirements, OWNER may have obtained geotechnical information, which may include laboratory test results and logs of borings from geotechnical consultants. That information will be included in this section and/or on the Drawings. The CONTRACTOR shall be familiar with the subsurface materials and conditions on the Project and shall be knowledgeable of how they will affect the Work. The following is a partial listing of sources of information available to the CONTRACTOR about subsurface materials and conditions: the geotechnical information provided by the OWNER; geologic maps, publications and reports available from the University of Texas Bureau of Economic Geology at the J.J. Pickle Research Center in Austin, Texas; subcontractors familiar with local ground conditions; and, local consulting geologists and geotechnical engineers. The CONTRACTOR may make their own subsurface investigations.

Geotechnical Engineering Report, Austin Bergstrom International Airport, ABIA Bus Shelter Improvements, Austin, Texas, dated July 15, 2016, prepared by HVJ Associates, Inc. is attached. The requirements in the Drawings and Specifications shall be used in the event of a conflict between this report and the Drawings and Specifications.

End

GEOTECHNICAL ENGINEERING REPORT
AUSTIN BERGSTROM INTERNATIONAL AIRPORT
ABIA BUS SHELTER IMPROVEMENTS
AUSTIN, TEXAS

REYNOLDS SMITH & HILL INC.
8140 N MO PAC EXPY STE 2-100
AUSTIN, TEXAS 78759

BY
HVJ ASSOCIATES, INC.
JULY 15, 2016

HVJ REPORT NO. AG 14 13542.1

HVJ ASSOCIATES

Houston
Austin
Dallas
San Antonio

4201 Freidrich Lane, Ste. 110
Austin, TX 78744-1045
512.447.9081 Ph
512.443.3442 Fax
www.hvj.com

July 15, 2016

Mr. Byron Chavez, P.E.,
Reynolds Smith & Hill Inc.
8140 N Mo Pac Expy Ste 2-100
Austin, Texas 78759

Re: Geotechnical Investigation
ABIA Bus Shelter Improvements
Owner: City of Austin
HVJ Project No. AG 14 13542.1

Dear Mr. Chavez:

Submitted herein is the final report of our geotechnical investigation for the above referenced project. This report provides subsurface information at the site along with design and construction recommendations for the proposed construction. This investigation was performed in accordance with HVJ Proposal No. AG 14 13542.1 dated December 9, 2015 (Revised January 28, 2016).

It has been a pleasure to work for you on this project and we appreciate the opportunity to be of service. Please notify us if there are questions or if we may be of further assistance.

Sincerely,

HVJ ASSOCIATES, INC.
Texas Firm Registration No. F-000646

STATE OF TEXAS
ZACH LOOTENS
122315
LICENSED
PROFESSIONAL ENGINEER

Zach Lootens, PE
Project Engineer

Date: 7/15/2016

Muhammad Mustafa, PE
Senior Engineer

This seal appearing on this document was authorized by Zach Lootens, PE 122315 on July 15, 2016. Alterations of a sealed document without proper notifications to the responsible engineer is an offense under the Texas Engineering Practice Act.

TABLE OF CONTENTS

Page

I. EXECUTIVE SUMMARY i

1 INTRODUCTION 1
- 1.1 General 1
- 1.2 Scope of Work 1

2 FIELD EXPLORATION 1
- 2.1 General 1
- 2.2 Sampling Methods and Field Testing 1
- 2.3 Groundwater Conditions 2
- 2.4 Borehole Completion 2

3 LABORATORY TESTING 2
- 3.1 General 2
- 3.2 Moisture Content 3
- 3.3 Atterberg Limits 3
- 3.4 Percent Passing the No. 200 Sieve 3
- 3.5 Uniaxial Compressive Strength Testing 3
- 3.6 Sulfate, Chloride, and pH 3
- 3.7 Soil Resistivity 4

4 SITE CHARACTERIZATION 4
- 4.1 General Geology 4
- 4.2 Subsurface Stratigraphy 4

5 DEEP FOUNDATION RECOMMENDATIONS 5
- 5.1 General 5
- 5.2 Axial Capacity 5
- 5.3 Uplift Load 5
- 5.4 Lateral Shaft Capacity 6
- 5.5 Group Effects 6
- 5.6 Settlement 7
- 5.7 Drilled Shaft Construction Recommendations 7

6 SHALLOW FOUNDATION RECOMMENDATIONS 8
- 6.1 General 8
- 6.2 Bearing Capacity 8
- 6.3 Subgrade Preparation 8
- 6.4 Select Fill 8
- 6.5 Building Pad and Foundation Preparation 8

7 LIMITATIONS 9

PLATES

Plate

SITE VICINITY MAP 1

GEOLOGY MAP 2

PLAN OF BORINGS 3

BORING LOGS 4

KEY TO TERMS & SYMBOLS USED ON BORING LOGS 5

APPENDICES

APPENDIX

LABORATORY TESTING SUMMARY ..... A

PH, SULFATE, CHLORIDE TEST RESULTS ..... B

LPILE PARAMETERS C

AASHTO GROUP EFFICIENCY FACTORS AND P-MULTIPLIERS ..... D

I. EXECUTIVE SUMMARY

HVJ Associates, Inc. (HVJ) was retained by Reynolds Smith & Hill to perform geotechnical engineering services for the ABIA Bus Shelter Improvements Project. The project will include design and installation of a new 250 SF bus shelter under the existing terminal bridge. HVJ understands the shelter will be supported on a drilled shaft foundation, or a combination of a drilled shaft and spread footing foundation. A map of the site vicinity is provided on Plate 1.

1. For this project the subsurface was explored by drilling a boring 30 feet in depth.

2. The boring encountered 12 inches of concrete pavement over 12 inches of flexbase, overlying 28 feet of soils from the Colorado River Terrace Deposits. The terrace deposits consisted of 5 feet of cohesive soil underlain by cohesionless soils. The upper 5 foot cohesive layer classified as Gravelly Lean Clay with Sand (CL). Underlying cohesionless soils from top to bottom included a 6 foot layer of medium dense, well graded gravel with clay and sand (GW-GC) with cobbles, 12.5 feet of medium dense to very dense silty sand (SM) with trace gravel, and medium dense, poorly graded sand (SP) extending to the termination depth of the boring

3. Drilled shaft foundations are recommended to support the cantilever type loads from the bus shelter structure. End bearing and skin friction capacity of drilled shafts are provided in the table below. It is expected that the piers be embedded into the Silty Sand (SM) or Poorly Graded Sand (SP) to support axial, lateral, and uplift loading. Skin friction in the cohesive soils within the top 10 feet should be neglected. Lateral load analysis should be performed using software such as LPILE, which provides lateral load capacity curves. LPILE parameters have been provided in Appendix C. It is expected that construction of the piers will require casing or slurry methods, due to the granular layers.

Drilled Shaft Capacity in Rock

Bearing Stratum	Depth (feet)	Maximum Allowable End Bearing Pressure (ksf)	Maximum Allowable Side Friction (ksf)	Maximum Allowable Side Friction Against Uplift (ksf)
GW-GC	7-13	12	0.31	0.28
SM	13-26.5	22	0.94	0.77
SP	>26.5	17	0.86	0.70

*skin friction values reduced to 60% capacity assuming casing will be used for construction

4. Spread footings are also being considered to support some of the bus shelter loads. A net allowable bearing pressure of 2,900 psf can be used for spread footing foundations bearing on Gravelly Lean Clay (CL). A shear resistance to resist sliding should be taken as the lesser of 1,200 psf and the bearing pressure divided by 2. Resistance to sliding from lateral forces should meet a safety factor of at least 1.5.

Please note that this executive summary does not fully convey our findings and opinions. These finding and opinions are only presented through our full report.

1 INTRODUCTION

1.1 General

HVJ Associates, Inc. (HVJ) was retained by Reynolds Smith & Hill to perform geotechnical engineering services for the ABIA Bus Shelter Improvements Project. The project will include design and installation of a new 250 SF bus shelter under the existing terminal bridge. HVJ understands the shelter will be supported on a drilled shaft foundation or a combination of a drilled shaft and spread footing foundation. A map of the site vicinity is provided on Plate 1.

1.2 Scope of Work

HVJ's scope of work is to provide information on subsurface conditions and to provide design and construction recommendations for the bus shelter. The primary objective of this study was accomplished by:

1. Drilling a boring to a depth of 30 feet to determine soil stratigraphy and to obtain samples for laboratory testing;

2. Performing laboratory tests to determine physical and engineering characteristics of the soils encountered; and

3. Performing engineering analyses to develop design and construction recommendations for the proposed bus shelter foundation on this project.

Subsequent sections of this report contain descriptions of the field exploration, laboratory testing program, site and subsurface conditions, foundation design and construction recommendations, and limitations.

2 FIELD EXPLORATION

2.1 General

The subsurface field exploration program undertaken for the project was conducted on April 21, 2016. The approximate boring location is provided in Plate 3. The following table depicts the general details for the boring.

Table 2-1: Boring Details

Bore	Northing	Easting	Elevation	Depth
B-1	10047603	3139285	494	30

Note: The boring was not professionally surveyed. Coordinates are based of handheld GPS unit accurate to ±10 feet and are in Northing and Easting for the Central Zone of the Texas State Plane Coordinate System, NAD 83(93). The elevation was taken from Google Earth 2015. Units: Survey Feet

2.2 Sampling Methods and Field Testing

Fine grained, cohesive soils encountered were sampled using a 3-inch outer diameter thin-walled tube, which was pushed into the soil in general accordance with ASTM standard D 1587- *Thin*

Walled Tube Sampling of Soils. The samples were extruded in the field and a calibrated pocket penetrometer was used to obtain an estimate of the unconfined compressive strength of the sample.

Standard Penetration Tests (SPTs) were conducted within cohesionless soils. The SPTs were performed in accordance with ASTM D 1586 – *Penetration Test and Split-Barrel Sampling of Soils*. This consisted of driving a standardized 1.50 ± 0.005 inch inner diameter split-spoon sampler into undisturbed soil with a safety 140-pound hammer falling 30 inches. A safety hammer with a 30 inch drop was used to perform the test. The split-spoon sampler was first seated 6 inches to penetrate any loose cuttings, and then driven an additional 12 inches with blows from the hammer. The number of hammer blows required to drive the sampler each 6-inch increment was recorded. The penetration resistance "N-value" is defined as the number of hammer blows required to drive the sampler the final 12 inches and was used in the field to estimate the consistency of cohesive soils.

Classification and field test results for both the thin-walled tube and split-spoon samples were recorded onto field logs, which included a visual description in accordance with ASTM D 2488 – *Visual Description and Identification of Soils*. After field documentation and logging was complete, the individual soil samples were either wrapped in plastic or placed in sealed containers to prevent loss of moisture and were transported to our laboratory for further examination and testing.

2.3 Groundwater Conditions

Groundwater was not encountered in the boring during the investigation. It should also be noted that groundwater levels may fluctuate seasonally, in response to climatic conditions and with precipitation events.

2.4 Borehole Completion

Upon completion, the boring was backfilled with soil cuttings and bentonite chips. The top 12 inches was patched with high-strength grout to match existing grade.

3 LABORATORY TESTING

3.1 General

Soil samples transported to our laboratory were further examined and described and a preliminary soil classification was assigned to each soil sample based on ASTM D 2487 – *Classification of Soil for Engineering Purposes*.

Classification testing, which included moisture contents, Atterberg Limits, and percent passing the No. 200 sieve was subsequently conducted on select samples. Uniaxial compressive strength, pH level, chloride and sulfate content, and soil resistivity testing was also performed on select samples from the boring. All testing was performed in accordance with the relevant ASTM Standards. The results of these tests were used to confirm or modify the preliminary soil classifications. The sampling information obtained in the field was used in conjunction with the laboratory examination and testing to generate a final boring log, provided Plate 4. A Key of Terms and Symbols for the boring logs is provided on Plate 5. The laboratory test results are provided on the final borings log, as well as tabulated in Appendix A.

3.2 Moisture Content

Moisture content testing was performed on select soil samples to determine the in situ state of moisture of the soil. A fresh sample was weighed before being placed in an oven with a controlled temperature of 230°F and dried back to a constant mass. Upon the drying and reweighing of the sample, the total mass of water lost was recorded. The ratio of the water loss to the dried mass is recorded as the moisture content. This test was performed in accordance with ASTM D2216-10.

3.3 Atterberg Limits

Select samples were tested to determine the Atterberg Limits in accordance with ASTM D4318-10. The Atterberg Limit test is used to classify the soil using the Unified Soil Classification System (USCS). The Atterberg Limit test consists of two parts: a liquid limit test and a plastic limit test. The liquid limit equipment setup consists of a brass cup partially filled with soil which is grooved with a specialized grooving tool, and then dropped freely from a specified height to the rubber base below at a constant rate of 2 drops per second. The liquid limit test is performed on soil that has been sieved through the No. 40 sieve and brought to a moisture content that would close the ½-inch groove within 20 to 30 blows for two consecutive tests. The moisture content of the soil is then measured and recorded as the liquid limit. The second part of the test consists of a rolling a remolded sample between the tips of the fingers and a glass plate until transverse cracks appear at a rolled diameter of 1/8-inch. The moisture content of the rolled sample is taken and recorded as the plastic limit.

3.4 Percent Passing the No. 200 Sieve

Select soil samples were tested in accordance with ASTM D1140-00 to determine the amount of material finer than the No. 200 sieve for use in classification. An oven dried sample of material is weighed then washed over a 75-μm (No. 200) sieve, allowing clay and other particles to be dispersed and removed from the soil. The retained material is oven dried then reweighed. The loss in mass resulting from the washing is calculated as mass percent of the original sample and is reported as the percentage of material finer than a No. 200 sieve.

3.5 Uniaxial Compressive Strength Testing

Select intact rock core samples were tested following procedure from ASTM D7012-10 to determine unconfined compressive strength. The sample is loaded until failure at a strain rate as constant as feasible. The unconfined compressive strength is taken as the compressive stress in the sample at failure.

3.6 Sulfate, Chloride, and pH

Sulfate and Chloride content of solids as well as pH was determined in accordance with TEX-620-J and SW9045D, respectively. The tests were performed on a sample in B-1 at 2-4 feet below grade and the table below summarizes the results. The sulfate concentration was well below the threshold to be considered for sulfate reaction with calcium-based stabilization.

Table 3-1: Soluble Sulfate Content

Boring No.	Depth (ft.)	pH	Chloride (ppm-dry)	Sulfate (ppm-dry)
B-1	2-4	7.78	<39.8	53.2

3.7 Soil Resistivity

The soil resistivity of the soil was measured using TEX-129-E. A sample from B-1 in the 2-4 foot interval was tested for soil resistivity, and yielded a value of 1744 Ω-cm.

4 SITE CHARACTERIZATION

4.1 General Geology

Austin, Texas is located on the boundary of the Edwards Plateau to the west and the Gulf Coastal Plains to the east and southeast. These physiographic provinces are separated by the Balcones Fault Zone (BFZ), a belt of inactive faults, which trends generally southwest to northeast through central Texas. Though the BFZ is not considered seismically active, it is important in that subsurface conditions may vary significantly across the fault boundaries. Highly plastic clays and limestone rock can be expected next to each other in faulted areas, and the fractures associated with faulting have the potential for increased permeability. This site is located just east of the BFZ and there are no mapped faults within the project limits. Based on review of available geological information[1], and the field exploration program, the project alignment lies within Lower Colorado River Terrace Deposits as shown on the Geology Map, Plate 2.

The Lower Colorado River Terrace Deposits (Qlcr) generally consist of yellow to orange brown sand, silt, clay, and/or gravel. The gravel of the terrace deposits are generally reworked limestone and chert fragments. The average thickness is 30 feet; however, it can range up to as much as 60 feet.

4.2 Subsurface Stratigraphy

The boring encountered 12 inches of concrete pavement over 12 inches of flexbase, overlying 28 feet of soils from the Colorado River Terrace Deposits. The terrace deposits consisted of 5 feet of cohesive soil underlain by cohesionless soils. The upper 5 foot cohesive layer classified as Gravelly Lean Clay with Sand (CL). Underlying cohesionless soils from top to bottom included: a 6 foot layer of medium dense well graded gravel with clay and sand (GW-GC) with cobbles; 12.5 feet of medium dense to very dense silty sand (SM) with trace gravel; and medium dense poorly graded sand (SP) extending to the termination depth of the boring. The table below provide laboratory statistics for the soils.

[1] Geologic Map of the Austin Area, Texas. (The University of Texas at Austin, Bureau of Economic Geology, 1992).

Table 4-1: Laboratory Testing

Test Type \ Sample Depth (ft)	2-4'	4-6'	7-9'	18.5-20'
Liquid Limit	-	36	30	-
Plastic Index	-	24	18	-
Percent Passing #200 Sieve (%)	-	57	9	38
Moisture Content (%)	14.2	15.4	3.1	8.8
Dry Unit Weight (pcf)	122	115	-	-
Uniaxial Compressive Strength (tsf)	2.0	1.2	-	-

5 DEEP FOUNDATION RECOMMENDATIONS

5.1 General

HVJ understands the bus shelter will have large, guitar-shaped walls that will be cantilever supported. The cantilever loading will impose uplift loads of up to 20 kips and lateral loads of 6 kips on the foundation. Based on the loading, HVJ recommends the foundations with cantilever type loading be supported with a drilled shaft system.

5.2 Axial Capacity

End bearing and skin friction capacity of drilled shafts are provided in Table 5-1 below. Skin friction in the cohesive layer should be neglected since it is within the seasonal moisture fluctuation zone. HVJ expects that the piers will need to be embedded into the Silty Sand (SM) layer to support the expected loads. If piers are embedded within 2 shaft diameters of the Poorly Graded Sand (SP) layer at 26.5 feet, the end bearing value for the SP stratum should be used for calculating the shaft end bearing resistance.

Table 5-1: Drilled Shaft Capacity in Cohesionless Soil

Bearing Stratum	Depth (feet)	Maximum Allowable End Bearing Pressure (ksf)	Maximum Allowable Side Friction (ksf)	Maximum Allowable Side Friction Against Uplift (ksf)
GW-GC	7-13	12	0.31	0.28
SM	13-26.5	22	0.94	0.77
SP	>26.5	17	0.86	0.70

*skin friction values reduced to 60% capacity assuming casing will be used for construction

5.3 Uplift Load

Drilled piers should be should be placed deep enough to provide sufficient skin friction to counter the expected uplift load of 20 kips in combination with uplift from swelling soils. The shaft of the drilled piers should be reinforced with sufficient vertical reinforcing steel to resist expected uplift forces with the addition of potential tension forces which may be induced by expansion of the moderately plastic soils observed at the site. A minimum shaft reinforcement ratio of 0.5% is recommended. The magnitude of the potential uplift force (in kips) induced on the shaft as a result of swelling clays can be estimated by multiplying the shaft diameter (in feet) by 9.4.

The amount of reinforcing steel required for the shaft can be computed by assuming that the dead load of the structure surcharges the pier and that the above estimated tensile force along with any uplift forces from the structure acts vertically on the shaft. The shafts of the drilled piers should be reinforced with sufficient vertical reinforcing steel as determined by the Engineer.

Allowable uplift resistance for the straight shaft piers can be estimated using allowable skin friction against uplift provided in Table 5-1, plus the approximate 3 kip dead load from the structure and shaft weight.

5.4 Lateral Shaft Capacity

Foundation elements often have to withstand significant lateral loads and bending moments in addition to axial loads. Wind forces are a form of lateral loading. Lateral loads and moments on a drilled shaft will be countered by the mobilization of resistance in the surrounding soils as the shaft deflects. The lateral load capacity of the shaft, therefore, will depend on its relative stiffness, and the strength of the surrounding soils. A rational analysis of a problem involving lateral loading on a shaft must consider the interaction of the soil and the structure. Equilibrium of forces and compatibility of displacements throughout the total system are the two fundamental conditions that are to be satisfied in the analysis. Lateral load analysis should be performed using software such as LPILE, which provides lateral load capacity curves. LPILE parameters have been provided in Appendix C.

5.5 Group Effects

The axial resistance for groups of shafts in cohesionless soils should be taken as the sum of the resistance of all shafts in the group using capacities provided in Table 5-1, reduced by an efficiency factor from Table 10.8.3.6.3-1 in AASHTO 2014[2], provided in Appendix D.

HVJ recommends a minimum center-to-center spacing of 3 shaft diameters. For laterally loaded shaft groups, lateral load capacity primarily is developed by the outer row of shafts on the side opposite the direction of lateral load, which we refer to as the "front" row. The lateral load contribution of shafts behind the front row provides substantially less resistance. In order to determine a conservative capacity of a shaft group determine the lateral capacity of the front row shafts using a program such as LPILE or another appropriate method. For shafts spaced at least 6 diameters apart, the groups lateral load capacity effects can be ignored and lateral capacity can be the sum of all shafts. For spacing of 5 diameters or less between shafts, P-Multipliers should be applied to the shaft resistance. P-Multipliers should be taken from Table 10.7.2.4-1 from AASHTO 2014[3], also provided in Appendix E. Lateral resistance from embedded pile caps may also be included for total lateral resistance, but disturbance effects on soil during construction must be considered. For drilled shaft groups with spacing less than the recommend 3 shaft diameter center-to-center spacing, a P-Multiplier of 0.5 should be used for the front row of shafts, and lateral resistance for subsequent rows should be neglected. A comprehensive analysis of group lateral load capacity that includes the contribution of shafts behind the front row was not in our scope.

[2] AASHTO LRFD Bridge Design Specifications, Seventh Edition, 2014.
[3] Ibid.

5.6 Settlement

When the drilled shafts are constructed as recommended in cohesionless material, settlement is expected to be elastic in nature, and essentially complete by the end of construction. The settlement should be less than 1 inch of total settlement, and less than 0.5 inches of differential settlement.

5.7 Drilled Shaft Construction Recommendations

Drilled shaft construction and installation should follow COA Standard Specification Item 420, TxDOT Standard Specification Item 416, TxDOT Construction Bulletin C-9, and ACI 336.3R-14. Slurry displacement methods for drilled shaft construction are allowed under TxDOT Standard Specifications. Presented below are a few specific recommendations. It is expected that casing and/or slurry methods will likely be the method of construction for drilled shafts.

1. Drilled shaft excavations should be inspected for verticality and side sloughing. Verticality is specified at one inch per every ten feet of the shaft length, and should be checked to the full depth of dry augering prior to introducing drilling mud.

2. Drilling slurries should meet the requirements of TxDOT Standard Specification Item 416, Table 3. Surface casing should be installed a minimum of 10 feet below the surface before introducing slurry.

3. Prior to the placement of concrete, the shaft bottom should be cleaned out with a drilling bucket in order to remove any sediment or debris that may not be displaced by the concrete. The shaft bottoms should be cleaned with a "clean-out" bucket until rotation on the bottom without crowd (i.e. penetration under force) produces little spoil.

4. Concrete placement should be accomplished as directed in TxDOT Standard Specification Item 416.3.6. A water-reducing, retarding admixture in accordance with DMS-4640, "Chemical Admixtures for Concrete" should be used in all concrete when using casing that will be pulled or when placing shafts under water or under slurry. The tremie pipe diameter should be at least eight times as large as the largest concrete aggregate size. The hole should be re-processed with the auger and then the bottom should be re-cleaned with a cleanout bucket or air lift if concrete placement is not started within 4 hours of the completion of the excavation.

5. Concrete should be placed using a closed tremie or be pumped to the bottom of the excavation when using slurry displacement or underwater concrete placement methods. Concrete should be placed continuously from beginning of placement until the shaft is complete.

6. A computation of the final concrete volume for each shaft should be made. Shafts taking an unreasonably high or low volume of concrete should be cored to check their integrity.

7. If casing is used it should be extracted slowly and smoothly with a vibratory hammer. The casing should always remain at least five feet below the level of the concrete during placement. Our analyses assume no casing will be left in place.

8. Shaft excavations should not be made within three shaft diameters (edge to edge) of shafts that have been concreted within the last 24 hours.

6 SHALLOW FOUNDATION RECOMMENDATIONS

6.1 General

As mentioned previously, the bus shelter structure will have large uplift loads from the cantilever effect of the guitar shaped walls. These loads will need to be supported by drilled shafts. However, the opposite end of the shelter that is not subject to cantilever uplift loads will be lightly loaded, and a spread footing is being considered to support these loads. The following sections provide spread footing capacity and construction recommendations.

6.2 Bearing Capacity

Based on the design information and our field investigation, a net allowable bearing pressure of 2,900 psf can be used for foundations bearing on Gravelly Lean Clay (CL). As the design process progresses and a foundation is selected, HVJ should be notified to verify that bearing capacity safety criteria is met. A shear resistance to resist sliding should be taken as the lesser of 1,200 psf and the bearing pressure divided by 2. Resistance to sliding from lateral forces should meet a safety factor of at least 1.5.

6.3 Subgrade Preparation

The exposed subgrade surface, following excavation for the foundation, should be compacted to at least 95% of the maximum dry density based on TxDOT method Tex-114-E. The compacted subgrade should then be inspected by a geotechnical engineer or qualified soil technician.

6.4 Select Fill

Non-expansive select fill should be utilized for all fill applications within the structure's limits. The select fill should consist of crushed limestone base material meeting the requirements of the Texas Department of Transportation (TxDOT) 2014 Standard Specification Item 247, Type A, Grade 3 or 'Flex Base' as specified in City of Austin Standard Specification Item 210s.

The select fill should be placed so that compacted lifts do not exceed 6 inches in thickness. Each lift should be compacted to a minimum of 100 percent of the maximum dry density as determined by TxDOT Method Tex-113-E for coarse-grained soils. The moisture content of the select fill should be ±2 points of optimum moisture content at the time of compaction.

6.5 Building Pad and Foundation Preparation

- It is recommended to remove the upper foot of the subgrade and that at least 12 inches of well compacted non-expansive select fill should be maintained below the new bus shelter slab. Spread footings can bear directly on the subgrade.

- After stripping and removal have been completed, the exposed subgrade soils should be carefully evaluated for unsuitable materials or organic matter. Questionable soils/materials

should be under-cut and replaced with compacted fill that meets the requirements indicated above.

- Prior to placement of select fill or concrete, the subgrade should be evaluated for moisture and density. If moisture and/or density requirements are not met, the moisture should be adjusted to at or above the optimum moisture content before it is re-compacted to at least 95 percent of the Tex-114-E maximum dry density. The soil subgrade should not be allowed to dry out or become saturated prior to placement of select fill or concrete.

- Post construction swell and/or settlement for the shallow foundation described in this subsection should be less than 1 inch, provided the site is prepared in accordance with the recommendations contained in this report. Settlement response of the foundation system will be influenced more by the quality of construction and fill placement than soil-structure interaction.

7 LIMITATIONS

This study was performed for the exclusive use of Reynolds Smith & Hill and City of Austin – Department of Aviation for specific application to the ABIA Bus Shelter project. HVJ Associates, Inc. has endeavored to comply with generally accepted geotechnical engineering practice common in the local area. HVJ Associates, Inc. makes no warranty, express or implied. The analyses and recommendations contained in this report are based on data obtained from subsurface exploration, laboratory testing, the project information provided to us, and our experience with similar soils and site conditions.

The methods used indicate subsurface conditions only at the specific locations where samples were obtained, only at the time they were obtained, and only to the depths penetrated. Samples cannot be relied on to accurately reflect the strata variations that usually exist between sampling locations. Should any subsurface conditions other than those described in our boring logs be encountered, HVJ Associates should be immediately notified so that further investigation and supplemental recommendations can be provided.

PLATES

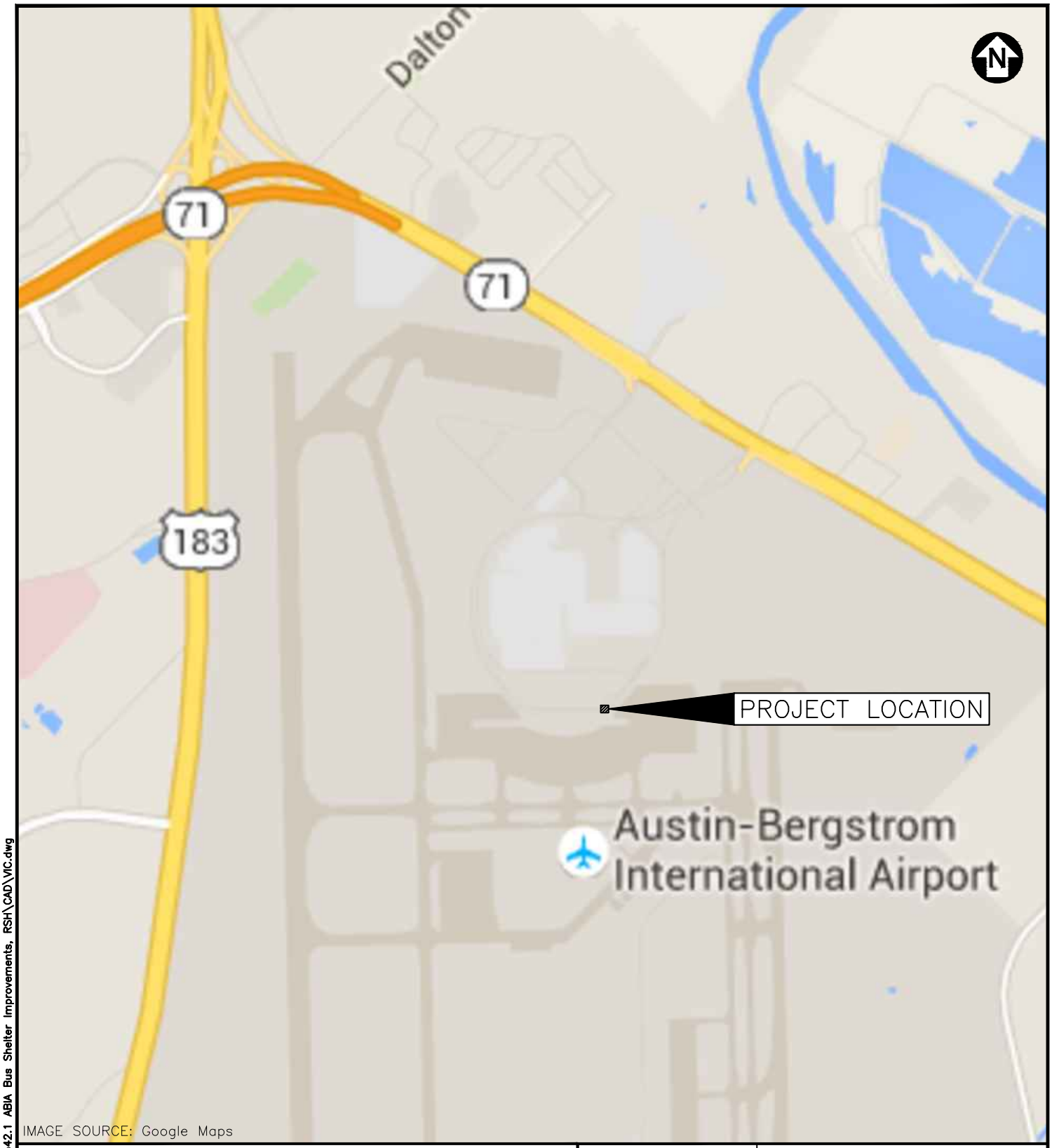

IMAGE SOURCE: Google Maps

MAP LOCATION

HVJ ASSOCIATES

SCALE: NTS		
DATE: 5/6/2016		
DRAWN BY: ZL	PROJ. CHK: MM	APPRV. BY: MH

SITE VICINITY MAP
AUSTIN BERGSTROM INTERNATIONAL AIRPORT
BUS SHELTER IMPROVEMENTS
AUSTIN, TEXAS

PROJECT NO.: AG 14 13542.1	FILENAME: VIC	PLATE 1

DATE: 5/6/2016 2:21:57 PM
FILE: P:\geo\Projects\2014\AG 14 13542.1 ABIA Bus Shelter Improvements, RSH\CAD\VIC.dwg

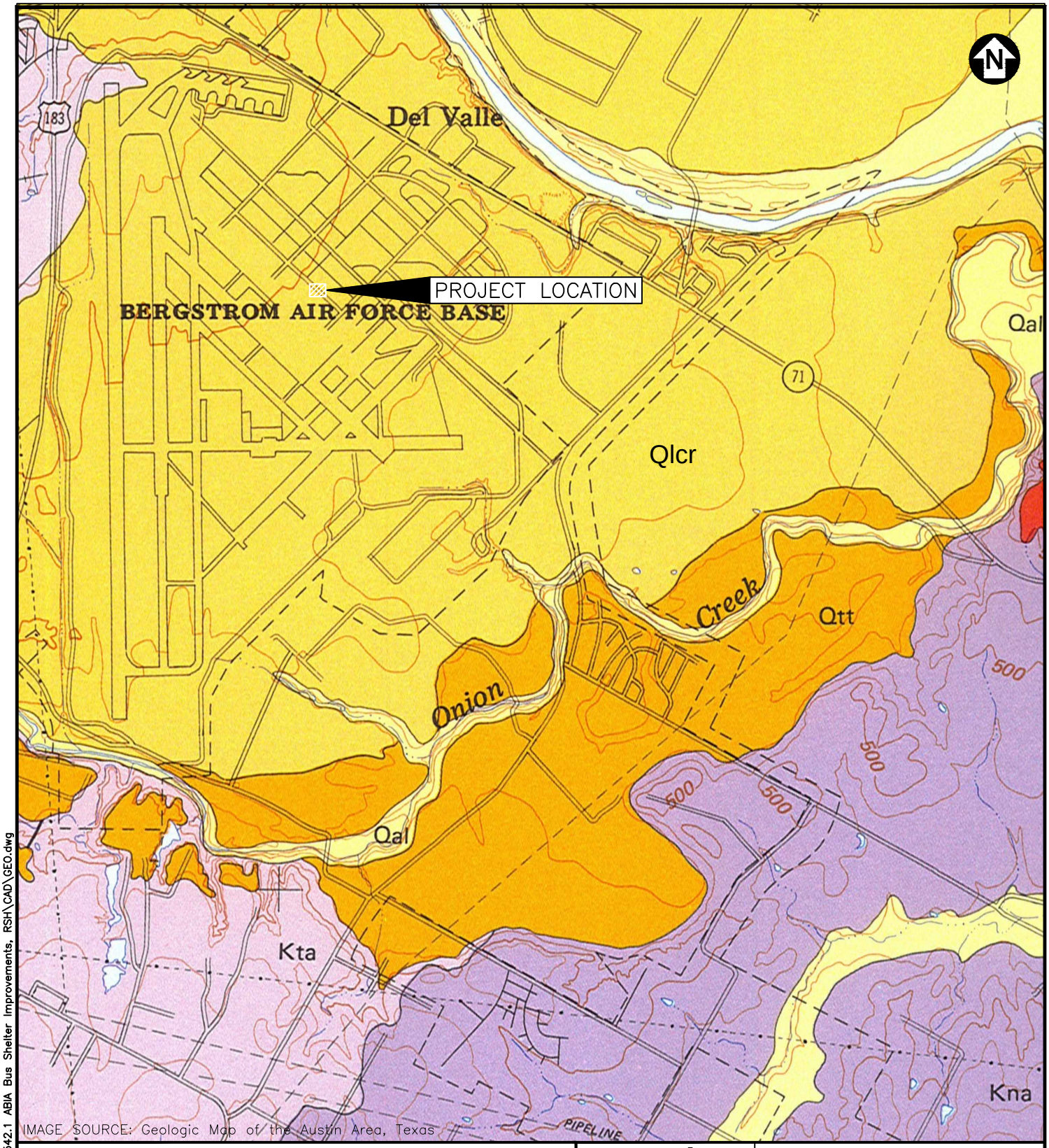

LEGEND

Qal	Alluvium
Qtt	Tributary Terrace Deposits
Qlcr	Lower Colorado River Terrace Deposits
Kta	Taylor Group
Kna	Navarro Group

MAP LOCATION

HVJ ASSOCIATES

SCALE: NTS		
DATE: 5/6/2016		
DRAWN BY: ZL	PROJ. CHK: MM	APPRV. BY: MH

GEOLOGY MAP
AUSTIN BERGSTROM INTERNATIONAL AIRPORT
BUS SHELTER IMPROVEMENTS
AUSTIN, TEXAS

PROJECT NO.: AG 14 13542.1	FILENAME: GEO	PLATE 2

DATE: 5/6/2016 2:24:12 PM
FILE: P:\geo\Projects\2014\AG 14 13542.1 ABIA Bus Shelter Improvements, RSH\CAD\GEO.dwg

Boring Location

MAP LOCATION

HVJ ASSOCIATES

SCALE: 1" = 100'		
DATE: 5/6/2016		
DRAWN BY: ZL	PROJ. CHK: MM	APPRV. BY: MH

PLAN OF BORINGS
AUSTIN BERGSTROM INTERNATIONAL AIRPORT
BUS SHELTER IMPROVEMENTS
AUSTIN, TEXAS

PROJECT NO.: AG 14 13542.1	FILENAME: POB	PLATE 3

DATE: 5/6/2016 2:26 PM
FILE: P:\geo\Projects\2014\AG 14 13542.1 ABIA Bus Shelter Improvements, RSH\CAD\POB.dwg

LOG OF BORING

Project: ABIA Bus Shelter Improvements
Boring No.: B-1
Groundwater during drilling: ---
Groundwater after drilling: ---

Date: 4/21/2016
Northing: 10,047,603.0
Easting: 3,139,285.0

Project No.: AG 14 13542.1
Elevation: 494 feet
Station: --
Offset: --

ELEV. DEPTH, FEET	SOIL SYMBOLS SAMPLER SYMBOLS AND FIELD TEST DATA	SOIL/ROCK CLASSIFICATION	% PASSING NO. 200 SIEVE	DRY DENSITY PCF
0		**12" CONCRETE PAVEMENT**.		
		12" FLEXBASE.		
	PP=2.0 tsf	Tan, stiff, **GRAVELLY LEAN CLAY WITH SAND (CL)**, moist. [Lower Colorado River Terrace Deposits]		122
490 / 5	PP=0.5 tsf		57	115
	PP=0.75 tsf			
		Tan, medium dense, **WELL GRADED GRAVEL WITH CLAY AND SAND (GW-GC)**, semi-moist, with cobbles. [Lower Colorado River Terrace Deposits]	9	
485 / 10				
480 / 15	6-8-12	Tan, medium dense to very dense, **SILTY SAND (SM),**semi-moist, with trace of gravel, fine grained. [Lower Colorado River Terrace Deposits] -with clay pockets 13-17'		
475 / 20	36-47-45		38	
470 / 25	14-20-19			
		Tan, medium dense, **POORLY GRADED SAND (SP),**moist, medium grained. [Lower Colorado River Terrace Deposits]		
465 / 30	11-13-16			

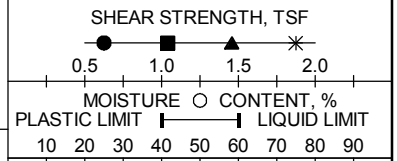

Shear Types: ● = Hand Penet. ■ = Torvane ▲ = Unconf. Comp. ✳ = UU Triaxial

See Plate 3 for boring location.

HVJ ASSOCIATES

LOG OF SOIL BORING AG 14 13542.1 ABIA BUS SHELTER.GPJ HVJ.GDT 5/11/16

SOIL SYMBOLS

Soil Types

Clay | Silt | Sand | Fill

Modifiers

Clayey | Silty | Sandy Clay | Cemented

Construction Materials

Asphaltic Concrete | Stabilized Base | Fill or Debris | Base

SAMPLER TYPES

- Thin Walled Shelby Tube
- No Recovery
- Split Barrel
- Auger
- THD Cone Penetration Test
- Jar Sample

WATER LEVEL SYMBOLS

- Groundwater level determined during drilling operations
- Groundwater level after drilling in open borehole or piezometer

SOIL GRAIN SIZE

Classification	Particle Size	Particle Size or Sieve No. (U.S. Standard)
Clay	< 0.002 mm	< 0.002 mm
Silt	0.002 - 0.075 mm	0.002 mm - #200 sieve
Sand	0.075 - 4.75 mm	#200 sieve - #4 sieve
Gravel	4.75 - 75 mm	#4 sieve - 3 in.
Cobble	75 - 200 mm	3 in. - 8 in.
Boulder	> 200 mm	> 8 in.

DENSITY OF COHESIONLESS SOILS

Descriptive Term	Penetration Resistance "N" * Blows/Foot
Very Loose	0 - 4
Loose	4 - 10
Medium Dense	10 - 30
Dense	30 - 50
Very Dense	> 50

CONSISTENCY OF COHESIVE SOILS

Consistency	Undrained Shear Strength (tsf)
Very Soft	0 - 0.125
Soft	0.125 - 0.25
Firm	0.25 - 0.5
Stiff	0.5 - 1.0
Very Stiff	1.0 - 2.0
Hard	> 2.0

PENETRATION RESISTANCE

3/6	Blows required to penetrate each of three consecutive 6-inch increments per ASTM D-1586 *
50/4"	If more than 50 blows are required, driving is discontinued and penetration at 50 blows is noted
0/18"	Sampler penetrated full depth under weight of drill rods and hammer

* The N value is taken as the blows required to penetrate the final 12 inches

TERMS DESCRIBING SOIL STRUCTURE

Slickensided	Fracture planes appear polished or glossy, sometimes striated
Fissured	Breaks along definite planes of fracture with little resistance to fracturing
Inclusion	Small pockets of different soils, such as small lenses of sand scattered through a mass of clay
Parting	Inclusion less than 1/4 inch thick extending through the sample
Seam	Inclusion 1/4 inch to 3 inches thick extending through the sample
Layer	Inclusion greater than 3 inches thick extending through the sample
Laminated	Soil sample composed of alternating partings of different soil type
Stratified	Soil sample composed of alternating seams or layers of different soil type
Intermixed	Soil sample composed of pockets of different soil type and laminated or stratified structure is not evident
Calcareous	Having appreciable quantities of calcium carbonate
Ferrous	Having appreciable quantities of iron
Nodule	A small mass of irregular shape

HVJ ASSOCIATES

PROJECT NO.: AG 14 13542.1

DRAWING NO.: PLATE 5

KEY TO TERMS AND SYMBOLS USED ON BORING LOGS FOR SOIL

DATE: 5/6/2016 2:28:15 PM
FILE: P:\geo\Projects\2014\AG 14 13542.1 ABIA Bus Shelter Improvements, RSH\CAD\SOIL_ROCK.dwg

APPENDIX A
LABORATORY TEST RESULTS SUMMARY

LABORATORY TEST RESULTS SUMMARY
Project Name: ABIA Bus Shelter Improvements
Project Number: AG 14 13542.1

Boring Number	Depth (ft)	% Passing No. 200 Sieve	Liquid Limit (%)	Plasticity Index (%)	Moisture Content (%)	Wet Unit Weight (pcf)	Dry Unit Weight (pcf)	Unconfined Compressive Strength (tsf)
B-1	2-4				14.2	139	122	2.0
	4-6	57	36	24	15.4	133	115	1.2
	7-9	9	30	18	3.1			
	18.5-20	38			8.8			

APPENDIX B
PH, SULFATE, CHLORIDE TEST RESULTS

May 11, 2016

Leo Ruiz
HVJ Associates, Inc.
4201 Freidrich Lane, Suite 110
Austin, Texas 78744-1045
TEL: (512) 447-9081
FAX (512) 443-3442

Order No.: 1605043

RE: Ag1413542.1

Dear Leo Ruiz:

DHL Analytical, Inc. received 1 sample(s) on 5/5/2016 for the analyses presented in the following report.

There were no problems with the analyses and all data for associated QC met EPA or laboratory specifications except where noted in the Case Narrative and all estimated uncertainties of results are within method specifications.

If you have any questions regarding these tests results, please feel free to call.

Sincerely,

John DuPont
General Manager

This report was performed under the accreditation of the State of Texas Laboratory Certification Number: T104704211-16-16

Table of Contents

Miscellaneous Documents 3

CaseNarrative 1605043 5

Analytical Report 1605043 6

AnalyticalQCSummaryReport 1605043 7

DHL ANALYTICAL
2300 Double Creek Dr. ■ Round Rock, TX 78664
Phone (512) 388-8222 ■ FAX (512) 388-8229
Web: www.dhlanalytical.com
E-Mail: login@dhlanalytical.com

№ 51750

CHAIN-OF-CUSTOD

CLIENT: HVJ Associates
ADDRESS: 4201 Freidrich LN Austin TX 78744
PHONE: 512-447-9081 FAX/E-MAIL:
DATA REPORTED TO:
ADDITIONAL REPORT COPIES TO:

DATE: 5-4-16 PAGE 1 OF 1
PO #: 16-0582A DHL WORK ORDER #: 16050432
PROJECT LOCATION OR NAME: Ag14135 42.1
CLENT PROJECT #: ABIA COLLECTOR:

Authorize 5% surcharge for TRRP Report? ☐ Yes ☐ No

S=SOIL P=PAINT W=WATER SL=SLUDGE A=AIR O=OTHER L=LIQUID SO=SOLID

PRESERVATION: HCl, HNO_3, H_2SO_4 ☐ NaOH ☐, ICE, UNPRESERVED

ANALYSES: BTEX ☐ MTBE ☐ [METHOD 8021] ☐ TPH 1005 ☐ TPH 1006 ☐ HOLD 1006 ☐ GRO [METHOD 8015] ☐ DRO [METHOD 8015] ☐ VOC 8260 ☐ VOC 624 ☐ VOC 8260/5035 ☐ SVOC 8270 ☐ PAH 8270 ☐ HOLD PAH ☐ SVOC 625 ☐ 8081 PEST ☐ 608 PEST/PCB ☐ 8270 PEST ☐ 8270 PCB ☐ 8270 O-P PEST ☐ 8082 PCB ☐ 8270 PCB ☐ 8321 HERB ☐ 8330 EXPL ☐ PERCHLORATE ☐ METALS 6020 ☐ METALS 200.8 ☐ DISS. METALS ☐ RCRA ☐ TX11 ☐ PH ☐ HEX CHROM ☐ ALKALINITY ☐ CHLORIDE ☐ ANIONS ☐ TCLP-SVOC ☐ VOC ☐ PEST ☐ HERB ☐ TCLP-METALS ☐ RCRA 8 ☐ TX-11 ☐ Pb ☐ RCI ☐ TOX ☐ FLASHPOINT ☐ TDS ☐ TSS ☐ % MOISTURE ☐ CYANIDE ☐ Sulfate

| Field Sample I.D. | DHL Lab # | Date | Time | Matrix | Container Type | # of Containers | HCl | HNO_3 | H_2SO_4 ☐ NaOH ☐ | ICE | UNPRESERVED | BTEX | MTBE | [METHOD 8021] | TPH 1005 | TPH 1006 | HOLD 1006 | GRO [METHOD 8015] | DRO [METHOD 8015] | VOC 8260 | VOC 624 | VOC 8260/5035 | SVOC 8270 | PAH 8270 | HOLD PAH | SVOC 625 | 8081 PEST | 608 PEST/PCB | 8270 PEST | 8270 PCB | 8270 O-P PEST | 8082 PCB | 8270 PCB | 8321 HERB | 8330 EXPL | PERCHLORATE | METALS 6020 | METALS 200.8 | DISS. METALS | RCRA | TX11 | PH | HEX CHROM | ALKALINITY | CHLORIDE | ANIONS | TCLP-SVOC | VOC | PEST | HERB | TCLP-METALS | RCRA 8 | TX-11 | Pb | RCI | TOX | FLASHPOINT | TDS | TSS | % MOISTURE | CYANIDE | Sulfate | FIELD NOTES |
|---|---|---

DHL Analytical, Inc.

Sample Receipt Checklist

Client Name HVJ Associates, Inc. Date Received: 5/5/2016

Work Order Number 1605043 Received by JT

Checklist completed by: Signature 5/5/2016 Date Reviewed by Initials 5/5/2016 Date

Carrier name Hand Delivered

Shipping container/cooler in good condition?	Yes ☑	No ☐	Not Present ☐
Custody seals intact on shippping container/cooler?	Yes ☐	No ☐	Not Present ☑
Custody seals intact on sample bottles?	Yes ☐	No ☐	Not Present ☑
Chain of custody present?	Yes ☑	No ☐	
Chain of custody signed when relinquished and received?	Yes ☑	No ☐	
Chain of custody agrees with sample labels?	Yes ☑	No ☐	
Samples in proper container/bottle?	Yes ☑	No ☐	
Sample containers intact?	Yes ☑	No ☐	
Sufficient sample volume for indicated test?	Yes ☑	No ☐	
All samples received within holding time?	Yes ☑	No ☐	
Container/Temp Blank temperature in compliance?	Yes ☑	No ☐	26.7 °C
Water - VOA vials have zero headspace?	Yes ☐	No ☐	No VOA vials submitted ☑
Water - pH<2 acceptable upon receipt?	Yes ☐	No ☐	NA ☑ LOT #
	Adjusted?		Checked by
Water - ph>9 (S) or ph>12 (CN) acceptable upon receipt?	Yes ☐	No ☐	NA ☑ LOT #
	Adjusted?		Checked by

Any No response must be detailed in the comments section below.

Client contacted _____ Date contacted: _____ Person contacted _____

Contacted by: _____ Regarding: _____

Comments: _____

Corrective Action _____

Page 1 of 1

DHL Analytical, Inc. **Date:** *11-May-16*

CLIENT: HVJ Associates, Inc.
Project: Ag1413542.1
Lab Order: 1605043

CASE NARRATIVE

Samples were analyzed using the methods outlined in the following references:

Test Methods for Evaluating Solid Waste, Physical/Chemical Methods, SW846, 3rd Edition and TEX620J.

All method blanks, sample duplicates, laboratory spikes, and/or matrix spikes met quality assurance objectives.

DHL Analytical, Inc.

Date: *11-May-16*

CLIENT:	HVJ Associates, Inc.	**Client Sample ID:**	B-1 (2-4)
Project:	Ag1413542.1	**Lab ID:**	1605043-01
Project No:	ABIA	**Collection Date:**	05/04/16
Lab Order:	1605043	**Matrix:**	SOIL

Analyses	Result	MDL	RL	Qual	Units	DF	Date Analyzed
PH OF SOLID (CORROSIVITY)		**SW9045D**					Analyst: **AJH**
pH	7.78	0	0		pH Units@19.8℃	1	05/11/16 09:55 AM
CHLORIDE AND SULFATE CONTENT IN SOIL		**TEX620J**					Analyst: **AV**
Chloride	<39.8	39.8	49.8	N	ppm-dry	10	05/06/16 01:33 PM
Sulfate	53.2	19.9	49.8	N	ppm-dry	10	05/06/16 01:33 PM

Qualifiers:

*	Value exceeds TCLP Maximum Concentration Level	B	Analyte detected in the associated Method Blank
C	Sample Result or QC discussed in the Case Narrative	DF	Dilution Factor
E	TPH pattern not Gas or Diesel Range Pattern	J	Analyte detected between MDL and RL
MDL	Method Detection Limit	ND	Not Detected at the Method Detection Limit
RL	Reporting Limit	S	Spike Recovery outside control limits
N	Parameter not NELAC certified		

DHL Analytical, Inc.

Date: *11-May-16*

CLIENT: HVJ Associates, Inc.
Work Order: 1605043
Project: Ag1413542.1

ANALYTICAL QC SUMMARY REPORT

RunID: **IC4_160506A**

The QC data in batch 74967 applies to the following samples: 1605043-01A

Sample ID **LCS-74967** Batch ID: **74967** TestNo: **Tex620J** Units: **ppm-dry**
SampType: **LCS** Run ID: **IC4_160506A** Analysis Date: **5/6/2016 10:25:31 AM** Prep Date: **5/5/2016**

Analyte	Result	RL	SPK value	Ref Val	%REC	LowLimit	HighLimit	%RPD	RPDLimit	Qual
Chloride	188	5.00	200.0	0	93.9	80	120			N
Sulfate	190	5.00	200.0	0	94.8	80	120			N

Sample ID **LCSD-74967** Batch ID: **74967** TestNo: **Tex620J** Units: **ppm-dry**
SampType: **LCSD** Run ID: **IC4_160506A** Analysis Date: **5/6/2016 10:40:31 AM** Prep Date: **5/5/2016**

Analyte	Result	RL	SPK value	Ref Val	%REC	LowLimit	HighLimit	%RPD	RPDLimit	Qual
Chloride	191	5.00	200.0	0	95.4	80	120	1.57	20	N
Sulfate	192	5.00	200.0	0	95.9	80	120	1.09	20	N

Sample ID **MB-74967** Batch ID: **74967** TestNo: **Tex620J** Units: **ppm-dry**
SampType: **MBLK** Run ID: **IC4_160506A** Analysis Date: **5/6/2016 11:18:59 AM** Prep Date: **5/5/2016**

Analyte	Result	RL	SPK value	Ref Val	%REC	LowLimit	HighLimit	%RPD	RPDLimit	Qual
Chloride	<4.00	5.00								N
Sulfate	<2.00	5.00								N

Sample ID **1605040-01A-DUP** Batch ID: **74967** TestNo: **Tex620J** Units: **ppm-dry**
SampType: **DUP** Run ID: **IC4_160506A** Analysis Date: **5/6/2016 11:48:59 AM** Prep Date: **5/5/2016**

Analyte	Result	RL	SPK value	Ref Val	%REC	LowLimit	HighLimit	%RPD	RPDLimit	Qual
Chloride	<39.7	49.7	0	0				0	25	N
Sulfate	41.0	49.7	0	39.08				4.71	25	N

Qualifiers:

B	Analyte detected in the associated Method Blank	DF	Dilution Factor
J	Analyte detected between MDL and RL	MDL	Method Detection Limit
ND	Not Detected at the Method Detection Limit	R	RPD outside accepted control limits
RL	Reporting Limit	S	Spike Recovery outside control limits
J	Analyte detected between SDL and RL	N	Parameter not NELAC certified

CLIENT: HVJ Associates, Inc.
Work Order: 1605043
Project: Ag1413542.1

ANALYTICAL QC SUMMARY REPORT

RunID: PH_160511A

The QC data in batch 75098 applies to the following samples: 1605043-01A

Sample ID	**1605043-01A-DUP**	Batch ID:	**75098**	TestNo:	**SW9045D**	Units:	**pH Units@19.8℃**
SampType:	**DUP**	Run ID:	**PH_160511A**	Analysis Date:	**5/11/2016 9:55:00 AM**	Prep Date:	**5/11/2016**

Analyte	Result	RL	SPK value	Ref Val	%REC	LowLimit	HighLimit	%RPD	RPDLimit	Qual
pH	7.83	0	0	7.780				0.641	5	

Qualifiers:				
	B	Analyte detected in the associated Method Blank	DF	Dilution Factor
	J	Analyte detected between MDL and RL	MDL	Method Detection Limit
	ND	Not Detected at the Method Detection Limit	R	RPD outside accepted control limits
	RL	Reporting Limit	S	Spike Recovery outside control limits
	J	Analyte detected between SDL and RL	N	Parameter not NELAC certified

APPENDIX C
L-PILE PARAMETERS

Computed By: BM
Date: 5/5/2016
Checked By: ZL
Date: 5/9/2016

Project: **ABIA Bus Shelter Improvements**
Project Number: **AG 14 13542.1**

Boring	Groundwater Depth, ft.	LPILE Parameters							
		Elevation, ft.	Soil Type	Effective Unit Weight (pcf)	Cohesion, Su (psf)	ϕ (deg)	Modulus of Subgrade Reaction k (pci)		ε_{50}
							Static	Cyclic	
B-1	50.0	492-487	Stiff Clay w/o free water (Reese)	122	1200	-	500	200	0.01
		487-481	Sand (Reese)	125	-	32	90	-	-
		481-477	Sand (Reese)	120	-	33	90	-	-
		477-473	Sand (Reese)	120	-	48	225	-	-
		473-467	Sand (Reese)	120	-	39	225	-	-
		467-464	Sand (Reese)	120	-	37	90	-	-

APPENDIX D
AASHTO P-MULTIPLIERS

Table 10.8.3.6.3-1—Group Reduction Factors for Bearing Resistance of Shafts in Sand

Shaft Group Configuration	Shaft Center-to-Center Spacing	Special Conditions	Reduction Factor for Group Effects, η
Single Row	2*D*		0.90
	3*D* or more		1.0
Multiple Row	2.5*D*		0.67
	3*D*		0.80
	4*D* or more		1.0
Single and Multiple Rows	2*D* or more	Shaft group cap in intimate contact with ground consisting of medium dense or denser soil, and no scour below the shaft cap is anticipated	1.0
Single and Multiple Rows	2*D* or more	Pressure grouting is used along the shaft sides to restore lateral stress losses caused by shaft installation, and the shaft tip is pressure grouted	1.0

Table 10.7.2.4-1—Pile P-Multipliers, P_m, for Multiple Row Shading (averaged from Hannigan et al., 2006)

Pile *CTC* spacing (in the direction of loading)	*P*-Multipliers, P_m		
	Row 1	Row 2	Row 3 and higher
3*B*	0.8	0.4	0.3
5*B*	1.0	0.85	0.7

City Manager
Austin, Texas

The undersigned, in compliance with the Invitation for Bids for construction of the following Project: **Bus Shelter Improvements**

(CIP ID# 6001.107) (IFB# CLMC622) for the City of Austin, Texas, having examined the Project Manual, Drawings and Addenda, the site of the proposed Work and being familiar with all of the conditions surrounding construction of the proposed Project, having conducted all inquiries, tests and investigations deemed necessary and proper; hereby proposes to furnish all labor, permits, material, machinery, tools, supplies and equipment, and incidentals, and to perform all Work required for construction of the Project in accordance with the Project Manual, Drawings and Addenda within the time indicated for the lump sum price of:

MINIMUM WAGES: Workers on Project shall be paid not less than wage rates, including fringe benefits, as published by the Department of Labor (DOL) for Building Construction and Heavy and Highway Trades "AS APPLICABLE" and/or the $13.03 minimum Wage required by City of Austin Ordinance No. 20160324-015, whichever is higher. The Total Minimum Wage required can be met using any combination of cash and non-cash qualified fringe benefits provided the cash component meets or exceeds the $13.03 minimum wage required.

TOTAL BID.....= $ _____

BID GUARANTY: A Bid guaranty must be enclosed with this Bid, as required in Section 00020, in the amount of not less than five percent (5%) of the total Bid. Following the Bid opening, submitted Bids may not be withdrawn for a period of (90) Calendar Days. Award of Contract will occur within this period, unless mutually agreed between the parties. The Bid guaranty may become the property of the OWNER, or the OWNER may pursue any other action allowed by law, if:

- Bidder withdraws a submitted Bid within the period stated above;
- Bidder fails to submit the required post Bid information within the period specified in Section 00020 or 00100, or any mutually agreed extension of that period; or
- Bidder fails to execute the Contract and furnish the prescribed documentation (bonds, insurance, etc.) needed to complete execution of the Contract within five (5) Working Days after notice of award, or any mutually agreed extension of that period.

GEOTECHNICAL BASELINE ACKNOWLEDGEMENT: The undersigned bidder certifies that he/she has read and understands the Geotechnical Baseline Report (GBR), the Geotechnical Data Report, the Reflection Survey Report, and all other geological and geotechnical information and data as provided in the Contract Documents, including all Addenda. ***The Bidder acknowledges and agrees that the GBR represents the contractual statement of the subsurface conditions reasonably anticipated to be encountered during construction. The GBR will be used to evaluate whether subsurface conditions differ materially from those indicated in the GBR.***

TIME OF COMPLETION: The undersigned Bidder agrees to commence work on the date specified in the written "Notice to Proceed" to be issued by the OWNER and to **substantially** complete construction of the improvements, as required by the Project Manual, Drawings and Addenda for the Work within **One Hundred Ten (110) Calendar** Days. **If a Substantial Completion date has been specified, the Bidder further agrees to reach Final Completion within Thirty (30) (Calendar) Days after Substantial Completion as required by the Project Manual, Drawings and Addenda for the work.** The Bidder further agrees that should the Bidder fail to **substantially complete the Work or to finally** complete the Work within the number of days indicated in the Bid or as subsequently adjusted, Bidder shall pay the liquidated damages for each consecutive day thereafter as provided below; unless the OWNER elects to pursue any other action allowed by law.

WAIVER OF ATTORNEY FEES: In submitting its bid, in consideration for the waiver of its right to attorney's fees by the OWNER, the Bidder knowingly and intentionally agrees to and shall waive the right to attorney's fees under Section 271.153 of the Texas Local Government Code in any administrative proceeding, alternative dispute resolution proceeding, or litigation arising out of or connected to any Contract awarded pursuant to this solicitation process.

LIQUIDATED DAMAGES: The Bidder understands and agrees that the timely completion of the described Work is of the essence. The Bidder and OWNER further agree that the OWNER's actual damages for delay caused by failure to timely complete the Project are difficult, if not impossible to measure. However, with respect to the additional administrative and consultant costs to be incurred by OWNER, the reasonable estimate of such damages has been calculated and agreed to by OWNER and Bidder. Therefore, the Bidder and the OWNER agree that for each and every **Calendar** Day the Work or any portion thereof, remains incomplete after the **Substantial** Completion date as established by the above paragraph, "Time of Completion", payment will be due to the Owner in the amount of **Four Hundred and Sixty** dollars **($460)** per **Calendar** Day as liquidated damages, not as a penalty, but for delay damages to the OWNER. **If both Substantial and Final Completion dates have been specified, the Bidder and the OWNER further agree that for each and every Calendar Day the Work or any portion thereof, remains incomplete after the Final Completion date as established by the above paragraph, "Time of Completion", payment will be due to the OWNER in the amount of Two Hundred and Forty Dollars ($240) per Calendar Day as liquidated damages, not as a penalty, but for delay damages to the OWNER.** Such amount shall be deducted by the OWNER from any Contract payment due. In the event of a default or breach by the CONTRACTOR and demand is made upon the surety to complete the project, in accordance with the Contract Documents, the surety shall be liable for liquidated damages pursuant to the Contract Documents in the same manner as the CONTRACTOR would have been.

OWNER reserves the right to reject any or all Bids and to waive any minor informality in any Bid or solicitation procedure (a minor informality is one that does not affect the competitiveness of the Bidders).

The undersigned acknowledges receipt of the following addenda:

Addendum No. 1 dated _____ Received _____

Addendum No. 2 dated _____ Received _____

Addendum No. 3 dated _____ Received _____

Addendum No. 4 dated _____ Received _____

BID DOCUMENT EXECUTION AND ACKNOWLEDGEMENT:

The undersigned Bidder certifies that he/she has read and understands the Section 00020 Invitation for Bids, the Section 00100 Instructions to Bidders, and all other requirements applicable to the bidding process provided in the Bid and Contract Documents.

Bidder will initial each of the blanks set forth below to represent and certify that the Bidder has completed, executed, and enclosed the corresponding supplemental Bid Documents with its Bid.

Bidder acknowledges and agrees by its signature below that in addition to any signatures required to be set forth in the following supplemental Bid Documents, Bidder is bound to the terms and conditions of each of the following documents, which are incorporated herein by reference:

_____ 00425A Insurance Cost Form *(ROCIP projects only)*

_____ 00440 Affidavit - Prohibited Activities

_____ 00475 Nonresident Bidder Provisions

_____ 00630 Non-Discrimination and Non-Retaliation Certificate
(NOTE: THIS FORM MUST STILL BE SEPARATELY SIGNED AND PROPERLY NOTARIZED)

_____ MBE/WBE Compliance Document

_____	_____
Secretary, *if Bidder is a Corporation	Bidder
	_____
(Seal)	Authorized Signature
	_____
	Title
	_____
	Date
	_____
	_____
	Address
	_____
	Telephone Number / FAX Number
	_____
	Email Address for Person Signing Bid
	_____
	Email Address for Bidder's Primary Contact Person

* Copy of Corporate Resolution and minutes with certificate of officer of Bidder as to authority of signatory to bind Bidder is to be signed and dated no earlier than one week before Bid date, and attached to this document.

End

CERTIFICATE OF NON-SUSPENSION OR DEBARMENT

Section 00405

The City of Austin is prohibited from contracting with or making prime or sub-awards to parties that are suspended or debarred or whose principals are suspended or debarred from Federal, State, or City of Austin Contracts. Covered transactions include procurement contracts for goods or services equal to or in excess of $25,000.00 and all non-procurement transactions. This certification is required for all bidders on all City of Austin Contracts to be awarded with values equal to or in excess of $25,000.00 and all non-procurement transactions.

The CONTRACTOR hereby certifies that its firm and its principals are not currently suspended or debarred from bidding on any Federal, State, or City of Austin Contracts.

PROJECT Name Bus Shelter Improvements

PROJECT Address 3600 Presidential Boulevard, Austin, TX 78719

CONTRACTOR'S Name _____

Signed by (Authorized Representative) _____

Printed Name: _____

Title _____

Date _____

END

SAFETY RECORD QUESTIONNAIRE & STATEMENT OF BIDDER'S SAFETY EXPERIENCE

(To Be Submitted Post-Bid)

Project: Bus Shelter Improvements

CIP ID Number: 6001.107

IFB Number: CLMC622

Pursuant to Section 252.0435 of the Local Government Code, the Austin City Council will consider the safety records of potential contractors prior to awarding bids on City contracts. The City of Austin has adopted the following written definitions and criteria for accurately determining the safety record of a Bidder prior to awarding bids on City contracts. The term "Bidder" includes the firm, corporation, partnership, or other legal entity represented by the Bidder or anyone acting for such firm, corporation, partnership or other entity submitting the bid. The definitions and criteria for determining the safety record of a Bidder are:

> "Citations" include notices of violation, notices of enforcement, suspension/revocations of state or federal licenses or registrations, fines assessed pending criminal complaints, indictments, or convictions, administrative orders, draft orders, final orders, and judicial final judgments. Notice of Violations and Notice of Enforcement received from the TCEQ shall include those classified as major violations and moderate violations under the TCEQ'S regulations for documentation of Compliance History, 30 Texas Administrative Code, Chapter 60.2 (c) (1) and (2).
>
> "Environmental Protection Agency" includes, but is not limited to the Texas Commission on Environmental Quality (TCEQ), the U.S. Environmental Protection Agency, the U.S. Fish and Wildlife Service, the U.S. Army Corps of Engineers, the Texas Department of Health, the Texas Parks and Wildlife Department, the Structural Pest Control Service, agencies of local governments responsible for enforcing environmental protection laws or regulations, and similar regulatory agencies of other states of the United States.

1. If the Bidder's response to the following questions reveals more than two (2) cases in which final orders have been entered by the Occupational Safety and Health Review Commission (OSHRC) against the Bidder for serious violations of Occupational Safety & Health Administration (OSHA) regulations within the past five (5) years, the City will, at its discretion, determine whether to disqualify the Bidder.
2. If the Bidder's response to the following questions reveals more than one (1) case in which Bidder has received a citation or for which final orders have been entered from an environmental protection agency for violations within the past five (5) years, the City will, at its discretion, determine whether to disqualify the Bidder.
3. If the Bidder's response to the following questions reveals that the Bidder has been convicted of a criminal offense within the past ten (10) years or has been subject to a judgment for a negligent act or omission, which resulted in serious bodily harm or death, at its discretion, the City will determine whether to disqualify the Bidder.
4. The City may consider the responses to each question listed below separately when making a discretionary determination of whether to disqualify a Bidder and it may consider the cumulative impact of the information generated by the Bidder's responses in making the determination.

5. The Bidder acknowledges the requirements for Safety Training (listed in Section 00700) must be met before any work commences on the project.
6. In order to consider the safety records of potential contractors prior to awarding bids on City contracts, the City requires that Bidders answer the following questions and submit them upon request:

QUESTION ONE

Has the Bidder received any Citations for violations of OSHA within the past five (5) years? ❒ Yes ❒ No

QUESTION TWO

Has the Bidder received any Citations for violations of environmental protection laws or regulations within the past five (5) years? ❒ Yes ❒ No

QUESTION THREE

Has the Bidder ever been convicted, within the past ten (10) years, of a criminal offense or has been subject to a judgment for a negligent act or omission, which resulted in serious bodily injury or death? ❒ Yes ❒ No

---

If the Bidder has indicated "Yes" to any question above, the Bidder must provide to the City, with its bid submission, the following information:

Date of Citation or offense and location where violation or offense occurred, type of violation or offense, final disposition of violation or offense, if any, and penalty assessed.

In addition, the City will utilize the following information and in its discretion, as additional support to make any discretionary determination of whether to disqualify a Bidder. Accordingly, Bidder must answer the following questions and provide evidence that it meets minimum OSHA construction safety standards and has a lost time injury rate that does not exceed the limits established below:

1. Does the Bidder have a written construction safety program? ❒ Yes ❒ No
2. Does the Bidder conduct regular construction site safety inspections? ❒ Yes ❒ No
3. Does the Bidder have an active construction safety training program? ❒ Yes ❒ No
4. Does the Bidder or affected subcontractors have competent persons in the following areas (as applicable to the scope of the current Project):

A. Scaffolding	❒ Yes	❒ No	❒ N/A
B. Excavation	❒ Yes	❒ No	❒ N/A
C. Cranes & Hoists	❒ Yes	❒ No	❒ N/A
D. Electrical	❒ Yes	❒ No	❒ N/A
E. Fall Protection	❒ Yes	❒ No	❒ N/A
F. Confined Spaces	❒ Yes	❒ No	❒ N/A
G. Material Handling	❒ Yes	❒ No	❒ N/A
H. Demolition	❒ Yes	❒ No	❒ N/A
I. Steel Erection	❒ Yes	❒ No	❒ N/A
J. Underground Construction	❒ Yes	❒ No	❒ N/A

5. Does the company have a lost time injury rate and a total recordable injury rate of less than or equal to the national average for North American Industrial Classification System (NAICS) Category 23 for each of the past five (5) years? (Attach the Bidder's OSHA 300 and 300A logs for the past five (5) years) ❒ Yes ❒ No

6. Does the Bidder have an experience modifier rate of 1.0 or less? (Attach the Bidder's NCCI workers compensation experience rating sheets for the past five (5) years) ❒ Yes ❒ No

7. Has the Bidder had any OSHA inspections within the past six (6) months? ❒ Yes ❒ No
(If "YES", provide sufficient documentation to indicate the nature of the inspection, the findings, and magnitude of the issues.)

ACKNOWLEDGEMENT

THE STATE OF TEXAS

COUNTY OF TRAVIS

I certify that my responses and the information provided are true and correct to the best of my personal knowledge and belief and t

hat I have made no willful misrepresentations in this Questionnaire, nor have I withheld any relevant information in my statements and answers to questions. I am aware that any information given by me in this questionnaire may be investigated and I hereby give my full permission for any such investigation and I fully acknowledge that any misrepresentations or omissions in my responses and information may cause my bid to be rejected.

Bidder's full name and entity status:

_____

Company's Name

_____

Signature, Authorized Representative of Bidder

_____

Title

_____

Date

END

CITY OF AUSTIN

BIDDER'S AFFIDAVIT OF NON-COLLUSION,

NON-CONFLICT OF INTEREST, AND ANTI-LOBBYING FOR

IFB NO. CLMC622

FOR (Bus Shelter Improvements)

CIP ID Number: 6001.107

State of Texas

County of Travis

The undersigned "Affiant" is a duly authorized representative of the bidder for the purpose of making this Affidavit, and, after being first duly sworn, has deposed and stated and hereby deposes and states, to the best of his or her personal knowledge and belief as follows:

The term **"Bidder"**, as used herein, includes the individual or business entity submitting the bid and for the purpose of this Affidavit includes the directors, officers, partners, managers, members, principals, owners, agents, representatives, employees, other parties in interest of the Bidder, and anyone or any entity acting for or on behalf of the Bidder, including a subcontractor in connection with this bid.

The terms **"City"** and **"Owner"** are synonymous.

1. **Anti-Collusion Statement.** The Bidder has not and will not in any way directly or indirectly:

   a. colluded, conspired, or agreed with any other person, firm, corporation, bidder or potential bidder to the amount of this bid or the terms or conditions of this bid.

   b. paid or agreed to pay any other person, firm, corporation bidder or potential bidder any money or anything of value in return for assistance in procuring or attempting to procure a contract or in return for establishing the prices in the attached bid or the bid of any other bidder.

2. **Preparation of Invitation for Bid and Contract Documents**. The Bidder has not received any compensation or a promise of compensation for participating in the preparation or development of the underlying bid or contract documents., In addition, the Bidder has not otherwise participated in the preparation or development of the underlying bid or contract documents, except to the extent of any comments or questions and responses in the bidding process, which are available to all bidders, so as to have an unfair advantage over other bidders, provided that the Bidder may have provided relevant product or process information to a consultant in the normal course of its business.

3. **Participation in Decision Making Process.** The Bidder has not participated in the evaluation of bids or proposals or other decision making process for this solicitation, and, if Bidder is awarded a contract hereunder, no individual, agent, representative, consultant or sub contractor or consultant associated with Bidder, who may have been involved in the evaluation or other decision making process for this solicitation, will have any direct or indirect financial interest in the Contract, provided that the Bidder may have provided relevant product or process information to a consultant in the normal course of its business.

4. **Present Knowledge.** Bidder is not presently aware of any potential or actual conflicts of interest regarding this solicitation, which either enabled Bidder to obtain an advantage over other bidders or would prevent Bidder from advancing the best interests of OWNER in the course of the performance of the Contract.

5. **City Code.** As provided in Sections 2-7-61 through 2-7-65 of the City Code, no individual with a substantial interest in Bidder is a City official or employee or is related to any City official or employee within the first or second degree of consanguinity or affinity.

6. **Chapter 176 Conflict of Interest Disclosure.** In accordance with Chapter 176 of the Texas Local Government Code, the Bidder:

   a. does not have an employment or other business relationship with any local government officer of OWNER or a family member of that officer that results in the officer of family member receiving taxable income;

   b. has not given a local government officer of OWNER one or more gifts, other than gifts of food lodging transportation or entertainment accepted as a guest, that have an aggregate value of more than $100 in the twelve month period preceding the date the officer becomes aware of the execution of the Contract or that OWNER is considering doing business with the Bidder; and

   c. does not have a family relationship with a local government officer of OWNER in the third degree of consanguinity or the second degree of affinity.

   As required by Chapter 176, Bidder must file the Conflicts of Interest Questionnaire with the Purchasing Department no later than the seventh business day after the commencement of contract discussions or negotiations with the City or the submission of a Bid, response to a request for proposals, or other writing related to a potential contract with OWNER. The questionnaire must be updated not later than the seventh day after the date of an event that would make a statement in the questionnaire inaccurate or incomplete. There are statutory penalties for failure to comply with Chapter 176.

7. **Anti-Lobbying Ordinance.** As set forth in paragraph 1.i. of the Instructions to Bidders Section 00100, between the date that the Invitation for Bid was issued and the date of full execution of the Contract, Bidder has not made and will not make a representation to a member of the City Council, a member of a City Board, or any other official, employee or agent of the City, other than the authorized contact person for the solicitation, except as permitted by the Ordinance.

If the Bidder cannot affirmatively swear and subscribe to the forgoing statements, the Bidder shall provide a detailed written explanation in the space provided below or, as necessary, on separate pages to be annexed hereto.

Signature: _____ Date: _____

Printed Name: _____

Title: _____

Firm/Entity: _____

Subscribed and sworn to before me this ____ day of _____, 20__.

_____ My Commission Expires _____
Notary Public

BIDDER'S EXPLANATION:

_____

END

NONRESIDENT BIDDER PROVISIONS

Section 00475

CIP ID Number: 6001.107

Bidder must answer the following questions in accordance with Vernon's Texas Statutes and Codes Annotated Government Code § 2252.002, as amended:

A. Is the bidder that is making and submitting this bid a "resident bidder" or a "non-resident bidder"?

Answer: _____

(1) Texas Resident Bidder - A bidder whose principal place of business is in Texas and includes a Contractor whose ultimate parent company or majority owner has its principal place of business in Texas.

(2) Nonresident Bidder - A bidder who is not a Texas Resident Bidder.

B. If the Bidder is a "Nonresident Bidder", does the state, in which the Nonresident Bidder's principal place of business is located, have a law requiring a Nonresident Bidder of that state to bid a certain amount or percentage under the bid of a Resident Bidder of that state in order for the nonresident bidder of that state to be awarded a contract on his bid in such state?

Answer: Yes or No Which state? _____

If the answer to Question B is "yes", then what amount or percentage must a Texas Resident Bidder bid under the bid price of a Resident Bidder of that state in order to be awarded a contract on such bid in said state?

Answer: _____

_____

Signature

END

STATE OF TEXAS
COUNTY OF TRAVIS

THIS AGREEMENT is made and entered into this _____ day of _____, 20____, by and between the City of Austin, Texas, a municipal corporation, organized and existing under laws of State of Texas, acting through its City Manager or other duly authorized designee, hereinafter referred to as the "OWNER," and _____, of the City of _____, County of _____, and State of _____, hereinafter referred to as the "CONTRACTOR."

In consideration of the promises, performances, payments and agreements set forth herein CONTRACTOR hereby agrees to commence and complete the following Project:

_____

_____

_____

_____

_____

and all Work in accordance with the Project Manual, Drawings and Addenda, which are incorporated herein by reference and made a part hereof and which have been prepared by _____ and approved by OWNER, and OWNER agrees to pay the CONTRACTOR the total amount of:

$_____ _____
(Figures) **(Words)**

The CONTRACTOR hereby agrees to commence work on the date specified in the written "Notice to Proceed" to be issued by the OWNER and to **substantially** complete construction of the improvements, as required by the Project Manual, Drawings and Addenda for the Work within **One Hundred Ten (110) Calendar** Days. **If a Substantial Completion date has been specified, the CONTRACTOR further agrees to reach Final Completion within Thirty (30) Calendar Days after Substantial Completion as required by the Project Manual, Drawings and Addenda for the work.** Waiver of any breach of this Contract shall not constitute waiver of any subsequent breach.

In consideration of the award and execution of this Contract, and in consideration of the waiver of its right to attorney's fees by the OWNER, the CONTRACTOR knowingly and intentionally waives its right to attorney's fees under Section 271.153 of the Texas Local Government Code in any administrative proceeding, alternative dispute resolution proceeding, or litigation arising out of or connected to this Contract.

OWNER agrees to pay CONTRACTOR from available funds for performance of the Contract in accordance with the Bid and the provisions of the Contract Documents, subject to additions and deductions, as provided therein.

The OWNER's payment obligations are payable only and solely from funds available for the purposes of this Agreement.

SAMPLE

Although drafted by OWNER, this Agreement, in event of any disputes over its meaning or application, shall be interpreted fairly and reasonably, and neither more strongly for nor against either party.

OWNER

By:_____
City of Austin (Signature)

_____
Date

_____
Title of Signatory

APPROVED AS TO FORM:

By:_____
Law Department

_____
Date

§ CONTRACTOR
§
§ By:_____
§ (Signature)
§ _____
§ Date
§ _____
§ Printed Name of Signatory
§
§ _____
§ Title of Signatory, Authorized Representative
§
§ ATTEST (as applicable)
§
§_____
§ Secretary of Corporate Bidder or Corporate General Partner *

*Copy of Corporate Resolution and minutes with certificate of officer of CONTRACTOR as to authority of signatory to bind CONTRACTOR is to be signed, dated no earlier than one week before the date of award of Contract, and attached to this document.

END

SAMPLE

PERFORMANCE BOND

Section 00610

STATE OF TEXAS

COUNTY OF _____

Bond No. _____

C.I.P. ID No. **6001.107**

Project Name **Bus Shelter Improvements**

Know All Men By These Presents: That _____ of the City of _____, County of _____, and State of _____, as Principal, and _____, a solvent company authorized under laws of the State of Texas to act as surety on bonds for principals, are held and firmly bound unto _____ (OWNER), in the penal sum of_____ _____ U.S. Dollars ($ _____U.S.) for payment whereof, well and truly to be made, said Principal and Surety bind themselves and their heirs, administrators, executors, successors and assigns, jointly and severally, by these presents:

Conditions of this Bond are such that, whereas, Principal has entered into a certain written contract with OWNER, dated the _____ day of _____, _____, which Agreement is hereby referred to and made a part hereof as fully and to the same extent as if copied at length herein.

Now, therefore, the condition of this obligation is such, that if said Principal shall faithfully perform said Agreement and shall in all respects duly and faithfully observe and perform all and singular covenants, conditions and agreements in and by said contract agreed and covenanted by Principal to be observed and performed, and according to true intent and meaning of said Agreement hereto annexed, then this obligation shall be void; otherwise to remain in full force and effect. If OWNER notifies Principal and Surety the OWNER is considering declaring Principal in default, Surety agrees to meet with OWNER and Principal no later than fifteen days after receipt of such notice to discuss methods of performing the Work of the Contract.

Provided, however, that this bond is executed pursuant to provisions of Chapter 2253, Texas Government Code as amended and all liabilities on this bond shall be determined in accordance with provisions of said Article to same extent as if it were copied at length herein.

Surety, for value received, stipulates and agrees that no change in Contract Time or Contract Amount shall in anywise affect its obligation on this bond, and it does hereby waive notice of any such change in Contract Time or Contract Amount.

In witness whereof, said Principal and Surety have signed and sealed this instrument this _____day of _____, _____.

_____	_____
Principal	Surety
By_____	By_____
(Signature)	(Signature)
Title_____	Title_____
Address_____	Address_____
_____	_____
_____	_____

Telephone_____Fax_____

E-Mail Address _____

Name and address of Resident Agent of Surety:

_____

_____

Note: Bond shall be issued by a solvent Surety company authorized to do business in Texas, and shall meet any other requirements established by law or by OWNER pursuant to applicable law. A copy of surety agent's "Power of Attorney" must be attached hereto.

END

PAYMENT BOND

Section 00620

STATE OF TEXAS

COUNTY OF _____

Bond No. _____

C.I.P. ID No. **6001.107**

Project Name **Bus Shelter Improvements**

Know All Men By These Presents: That _____ of the City of _____, County of _____, and State of _____, as Principal, and _____, a solvent company authorized under laws of the State of Texas to act as surety on bonds for principals, are held and firmly bound unto _____ (OWNER), and all Subcontractors, workers, laborers, mechanics and suppliers as their interests may appear, all of whom shall have right to sue upon this bond in the penal sum of _____ U.S. Dollars ($ _____U.S.) for payment whereof, well and truly to be made, said Principal and Surety bind themselves and their heirs, administrators, executors, successors and assigns, jointly and severally, by these presents:

Conditions of this Bond are such that, whereas, Principal has entered into a certain written contract with OWNER, dated the _____ day of _____, _____, which Agreement is hereby referred to and made a part hereof as fully and to the same extent as if copied at length herein.

Now, therefore, condition of this obligation is such, that if the said Principal shall well and truly pay all Subcontractors, workers, laborers, mechanics, and suppliers, all monies to them owing by said Principals for subcontracts, work, labor, equipment, supplies and materials done and furnished for the construction of improvement of said Agreement, then this obligation shall be and become null and void; otherwise to remain in full force and effect.

Provided, however, that this bond is executed pursuant to provisions of Chapter 2253, Texas Government Code as amended and all liabilities on this bond shall be determined in accordance with provisions of said Article to same extent as if it were copied at length herein.

Surety, for value received, stipulates and agrees that no change in Contract Time or Contract Amount shall in anywise affect its obligation on this bond, and it does hereby waive notice of any such change in Contract Time or Contract Amount.

In witness whereof, said Principal and Surety have signed and sealed this instrument this _____day of _____, _____.

_____	_____
Principal	Surety
By_____	By_____
(Signature)	(Signature)
Title_____	Title_____
Address_____	Address_____
_____	_____
_____	_____

Telephone_____Fax_____

E-Mail Address _____

Name and address of Resident Agent of Surety:

_____

_____

Note: Bond shall be issued by a solvent Surety company authorized to do business in Texas, and shall meet any other requirements established by law or by OWNER pursuant to applicable law. A copy of surety agent's "Power of Attorney" must be attached hereto.

END

CIP ID Number:

City of Austin, Texas
Equal Employment/Fair Housing Office

To: City of Austin, Texas, ("OWNER")

I hereby certify that our firm conforms to the Code of the City of Austin Section 5-4-2 as reiterated below:

Chapter 5-4. Discrimination in Employment by City Contractors.

Sec. 4-2 Discriminatory Employment Practices Prohibited. (B) As an Equal Employment Opportunity (EEO) employer, the Contractor will conduct its personnel activities in accordance with established federal, state and local EEO laws and regulations and agrees:

(1) Not to engage in any discriminatory employment practice defined in this chapter.

(2) To take affirmative action to ensure that applicants are employed, and that employees are treated during employment, without discrimination being practiced against them as defined in this chapter. Such affirmative action shall include, but not be limited to: all aspects of employment, including hiring, placement, upgrading, transfer, demotion, recruitment, recruitment advertising; selection for training and apprenticeship, rates of pay or other forms of compensation, and layoff or termination.

(3) To post in conspicuous places, available to employees and applicants for employment, notices to be provided by OWNER setting forth the provisions of this chapter.

(4) To state in all solicitations or advertisements for employees placed by or on behalf of Contractor, that all qualified applicants will receive consideration for employment without regard to race, creed, color, religion, national origin, sexual orientation, gender identity, disability, veteran status, sex or age.

(5) To obtain a written statement from any labor union or labor organization furnishing labor or service to Contractors in which said union or organization has agreed not to engage in any discriminatory employment practices as defined in this chapter and to take affirmative action to implement policies and provisions of this chapter.

(6) To cooperate fully with OWNER's Equal Employment/Fair Housing Office in connection with any investigation or conciliation effort of said Equal Employment/Fair Housing Office to ensure that the purpose of the provisions against discriminatory employment practices are being carried out.

(7) To require compliance with provisions of this chapter by all subcontractors having fifteen or more employees who hold any subcontract providing for expenditure of $2,000.00 or more in connection with any contract with OWNER subject to the terms of this chapter. .

For the purposes of this Bid and any resulting Contract, Contractor adopts the provisions of the City's Minimum Standard Nondiscrimination and Non-Retaliation Policy as set forth below.

City of Austin

Minimum Standard Non-Discrimination and Non-Retaliation in Employment Policy

As an Equal Employment Opportunity (EEO) employer, the Contractor will conduct its personnel activities in accordance with established federal, state and local EEO laws and regulations.

The Contractor will not discriminate against any applicant or employee based on race, creed, color, national origin, sex, age, religion, veteran status, gender identity, disability, or sexual orientation. This policy covers all aspects of employment, including hiring, placement, upgrading, transfer, demotion, recruitment, recruitment advertising, selection for training and apprenticeship, rates of pay or other forms of compensation, and layoff or termination.

The Contractor agrees to prohibit retaliation, discharge or otherwise discrimination against any employee or applicant for employment who has inquired about, discussed or disclosed their compensation.

Further, employees who experience discrimination, sexual harassment, or another form of harassment should immediately report it to their supervisor. If this is not a suitable avenue for addressing their complaint, employees are advised to contact another member of management or their human resources representative. No employee shall be discriminated against, harassed, intimidated, nor suffer any reprisal as a result of reporting a violation of this policy. Furthermore, any employee, supervisor, or manager who becomes aware of any such discrimination or harassment should immediately report it to executive management or the human resources office to ensure that such conduct does not continue.

Contractor agrees that to the extent of any inconsistency, omission, or conflict with its current non-discrimination and non- retaliation employment policy, the Contractor has expressly adopted the provisions of the City's Minimum Non-Discrimination Policy contained in Section 5-4-2 of the City Code as set forth above and the City's Non-Retaliation Policy, as the Contractor's Non-Discrimination and Non-Retaliation Policy or as an amendment to such Policy and such provisions are intended to not only supplement the Contractor's policy, but will also supersede the Contractor's policy to the extent of any conflict.

UPON CONTRACT AWARD, THE CONTRACTOR SHALL PROVIDE A COPY TO THE CITY OF THE CONTRACTOR'S NON-DISCRIMINATION AND NON-RETALIAITON POLICY ON COMPANY LETTERHEAD, WHICH CONFORMS IN FORM, SCOPE, AND CONTENT TO THE CITY'S MINIMUM NON-DISCRIMINATION AND NON-RETALIATION POLICY, AS SET FORTH HEREIN, ***OR*** *THIS NON-DISCRIMINATION AND NON-RETALIATION POLICY, WHICH HAS BEEN ADOPTED BY THE CONTRACTOR FOR ALL PURPOSES (THE FORM OF WHICH HAS BEEN APPROVED BY THE CITY'S EQUAL EMPLOYMENT/FAIR HOUSING OFFICE), WILL BE CONSIDERED THE CONTRACTOR'S NON-DISCRIMINATION AND NON-RETALIATION POLICY WITHOUT THE REQUIREMENT OF A SEPARATE SUBMITTAL. (http://austintexas.gov/page/bid-docs).*

Sanctions:

Our firm understands that non-compliance with Chapter 5-4 may result in sanctions, including termination of the contract and suspension or debarment from participation in future City contracts until deemed compliant with the requirements of Chapter 5-4.

Term:

The Contractor agrees that this Section 00630 Non-Discrimination and Non-Retaliation Certificate or the Contractor's separate conforming policy, which the Contractor has executed and filed with the Owner, will remain in force and effect for one year from the date of filing. The Contractor further agrees that, in consideration of the receipt of continued Contract payments, the Contractor's Non-Discrimination Policy will automatically renew from year-to-year for the term of the underlying Contract.

Dated this _____ day of _____, _____.

CONTRACTOR _____

Authorized Signature _____

Title _____

END

During the performance of this contract, the contractor, for itself, its assignees and successors in interest (hereinafter referred to as the "contractor") agrees as follows:

1. Compliance with Regulations: The contractor shall comply with the Regulations relative to nondiscrimination in Federally-assisted programs of the Department of Transportation (hereinafter, "DOT") Title 49, Code of Federal Regulations, Part 21, as they may be amended from time to time, (hereinafter referred to as the Regulations), which are herein incorporated by reference and made a part of this contract.

2. Nondiscrimination: The contractor, with regard to the work performed by it during the contract, shall not discriminate on the grounds of race, color, or national origin in the selection and retention of subcontractors, including procurements of materials and leases of equipment. The contractor shall not participate either directly or indirectly in the discrimination prohibited by section 21.5 of the Regulations, including employment practices when the contract covers a program set forth in Appendix B of the Regulations.

3. Solicitations for Subcontracts, Including Procurements of Materials and Equipment: In all solicitations either by competitive bidding or negotiation made by the contract for work to be performed under a subcontract, including procurements of materials or leases of equipment, each potential subcontractor or supplier shall be notified by the contractor of the contractor's obligations under this contract and the Regulations relative to nondiscrimination on the grounds of race, color, or national origin.

4. Information and Reports: The contractor shall provide all information and reports required by the Regulations or directives issued pursuant thereto, and shall permit access to its book, records, accounts, other sources of information, and its facilities as may be determined by the Recipient or the Texas Department of Transportation to be pertinent to ascertain compliance with such Regulations, orders and instructions. Where any information required of a contractor is in the exclusive possession of another who fails or refuses to furnish this information the contractor shall so certify to the Recipient, or the Texas Department of Transportation as appropriate, and shall set forth what efforts it has made to obtain the information.

5. Sanctions for Noncompliance: In the event of the contractor's noncompliance with the nondiscrimination provisions of this contract, the Recipient shall impose such contract sanctions as it or the Texas Department of Transportation may determine to be appropriate, including, but not limited to:

   (a) withholding of payments to the contractor under the contract until the contractor complies, and or (b) cancellation, termination or suspension of the contract, in whole or in part.

6. Incorporation of Provisions: The contractor shall include the provisions of paragraphs (1) through (6) in every subcontract, including procurements of materials and leases of equipment, unless exempt by the Regulations, or directives issued pursuant thereto. The contractor shall take such action with respect to any subcontract or procurement as the Recipient or the Texas Department of Transportation may direct as a means of enforcing such provisions including sanctions for non-compliance: Provided, however, that, in the event a contractor becomes involved in, or is threatened with, litigation with a subcontractor or supplier as a result of such direction, the contractor may request the Recipient to enter into such litigation to protect the

interests of the Recipient, and, in addition, the contractor may request the United States to enter into such litigation to protect the interests of the United States.

(DOT 1050.2, 08/24/71)

Contractor's full name and entity status:

_____

Signature, Authorized Representative of Contractor

_____

Title

_____

Date

END

CERTIFICATE OF INSURANCE

Section 00650

This Certificate shall be completed by a licensed insurance agent:

Name and Address of Agency:

_____
_____
_____

Phone: _____ / _____

Name and Address of Insured:

_____
_____

_____

Phone: _____ / _____

Prime or Sub-Contractor?: _____

Name of Prime Contractor, if different from Insured: _____

City of Austin Reference:
Project Name: **Bus Shelter Improvements**
C.I.P. No.: **6001.107**
Project Location: **Austin-Bergstrom International Airport, 3600 Presidential Boulevard, Austin, Texas 78719**
Managing Dept.: **Public Works**
Contract No.: _____
Project Mgr.: **David Smythe-Macaulay**

Insurers Affording Coverages:
Insurer A:
_____
Insurer B:
_____
Insurer C:
_____
Insurer D:
_____

INSR LTR	TYPE OF INSURANCE	POLICY NUMBER	POLICY EFFE-CTIVE DATE (MM/DD/YYYY)	POLICY EXPIR-ATION DATE (MM/DD/YYYY)	LIMITS OF LIABILITY	
	Commercial General Liability Policy As defined in the Policy, does the Policy provide:				Each Occurrence	$
					General Aggregate	$
	☐ Yes ☐ No -- Completed Operations/Products				Completed Operations /Products Aggregate	$
	☐ Yes ☐ No -- Contractual Liability				Personal & Advertising Injury	$
	☐ Yes ☐ No -- Explosion				Deductible or Self Insured Retention	$
	☐ Yes ☐ No -- Collapse					
	☐ Yes ☐ No -- Underground					
	☐ Yes ☐ No -- Contractors/ Subcontractors Work					
	☐ Yes ☐ No -- Aggregate Limits per Project Form CG 2503					
	☐ Yes ☐ No -- Additional Insured Form – CG 2010					
	☐ Yes ☐ No -- 30 Day Notice of Cancellation Form – CG 0205					
	☐ Yes ☐ No -- Waiver of Subrogation Form – CG 2404					
	Pollution/ Environmental Impairment Policy				Occurrence	$
					Aggregate	$

INSR LTR	TYPE OF INSURANCE	POLICY NUMBER	POLICY EFFE-CTIVE DATE (MM/DD/YYYY)	POLICY EXPIR-ATION DATE (MM/DD/YYYY)	LIMITS OF LIABILITY	
	Auto Liability Policy As defined in the Policy, does the Policy provide:				CSL	$
					Bodily Injury (Per Accident)	$
	☐ Yes ☐ No -- Any Auto				Bodily Injury (Per Person)	$
	☐ Yes ☐ No -- All Owned Autos				Property Damage (Per Accident)	$
	☐ Yes ☐ No -- Non-Owned Autos					
	☐ Yes ☐ No -- Hired Autos					
	☐ Yes ☐ No -- Waiver of Subrogation – CA0444					
	☐ Yes ☐ No -- 30 Day Notice of Cancellation – CA0244					
	☐ Yes ☐ No -- Additional Insured – CA2048					
	☐ Yes ☐ No -- MCS 90					
	Excess Liability ☐ Umbrella Form ☐ Excess Liability Follow Form				Occurrence	$
					Aggregate	$
	Workers Compensation and Employers Liability As defined in the Policy, does the Policy provide:				☐ Statutory	
					Each Accident	$
	☐ Yes ☐ No -- Waiver of Subrogation – WC420304				Disease – Policy Limit	$
	☐ Yes ☐ No -- 30 Day Notice of Cancellation – WC420601				Disease – Each Employee	$
	Is a Builders Risk or Installation Insurance Policy provided? ☐ Yes ☐ No					$
	☐ Yes ☐ No -- Is the City shown as loss payee/mortgagee?					
	Professional Liability As defined in the Policy, does the Policy provide:				Each Claim	$
	☐ Yes ☐ No -- 30 Day Notice of Cancellation Retroactive Date: _____				Deductible or Self Insured Retention	$

This form is for informational purposes only and certifies that policies of insurance listed above have been issued to insured named above and are in force at this time. Not withstanding any requirements, term or condition of any contract or other document with respect to which this certificate may be issued or may pertain, insurance afforded by policies described herein is subject to all terms, exclusions and conditions of such policies.

CERTIFICATE HOLDER:

City of Austin
Capital Contracting Office
P.O. Box 1088
Austin, Texas 78767

DATE ISSUED: _____

_____
AUTHORIZED REPRESENTATIVE SIGNATURE
Licensed Insurance Agent

END

TEXAS SALES AND USE TAX EXEMPTION CERTIFICATE

Section 00670

City of Austin, Texas
P.O. Box 1088
Austin, Texas 78767

CONTRACTOR/PURCHASER: _____

Street Address: _____

City, State, ZIP Code: _____

PROJECT: _____

Project Manager: _____

FDU No.: _____

CIP ID No. **6001.107**

Description of items to be purchased or as described on the attached order or invoice:

_____

_____

The Contractor may purchase all labor, materials, supplies, and equipment to be incorporated in the City of Austin realty, including easements, or completely consumed at the Project jobsite and services required by or integral to the performance of the contract for the Project without paying sales or use tax in accordance with State Comptroller Rule 3.291.

Contractor/Purchaser claims this exemption for the following reason: This contract is to be performed for the City of Austin, a tax exempt entity under the Texas Tax Code.

I understand that I will be liable for payment of sales and use taxes which may become due for failure to comply with the provisions of the Tax Code. I also understand that it is a criminal offense to give an exemption certificate to the contractor for taxable items that I know, at the time of purchase, will be used in a manner other than that expressed in this certificate and depending on the amount of tax evaded, the offense may range from a Class B misdemeanor to a felony of the second degree.

City of Austin, Texas	Title	Date
Elaine Hart		
ELAINE HART	CHIEF FINANCIAL OFFICER	March 20, 2014

CONTRACTOR/PURCHASER: _____

By: _____

Title: _____

Date: _____

NOTE: This certificate cannot be issued for the purchase, lease, or rental of a motor vehicle. THIS CERTIFICATE DOES NOT REQUIRE A NUMBER TO BE VALID. Sales and Use Tax "Exemption Numbers" or "Tax Exempt" Numbers do not exist. This certificate should be furnished to the supplier. Do not send the completed certificate to the Comptroller of Public Accounts.

End

NON-USE OF ASBESTOS AFFIDAVIT (CONTRACTOR PRIOR TO CONSTRUCTION)

Section 00680

STATE OF TEXAS
COUNTY OF TRAVIS

BEFORE ME, the undersigned authority, personally appeared the Affiant who, being by me first duly sworn, upon oath deposed and stated:

"My name is _____, hereinafter known as Affiant.

"I am over the age of 18 years and I have never been convicted of a crime. I am the _____ of _____ hereinafter known as CONTRACTOR.

"I am fully competent to make this affidavit. I have personal knowledge of the facts set forth below and they are all true and correct.

"WHEREAS CONTRACTOR has submitted a bid to the City of Austin as the Prime CONTRACTOR and anticipates being awarded a contract for the construction of _____ _____, located at _____, Austin, Texas, hereinafter known as Project, for the City of Austin, Texas, hereinafter known as OWNER, and

"WHEREAS asbestos in a dust form is a recognized health hazard, and

"WHEREAS the OWNER desires not to have any asbestos containing materials used or incorporated into the construction of the Project;

"THEREFORE the CONTRACTOR affirms and understands the following:

1. The CONTRACTOR, any person, firm or organization representing or represented by the CONTRACTOR, or employed by the CONTRACTOR shall not cause or allow any material to be incorporated into the construction of the project, or allow any building material on the project site that is an asbestos containing material or any other material defined as containing asbestos by any laws, rules or regulations promulgated by the United States Government, the State of Texas or any governmental organization or agency operating under the authority of either of those entities.
2. Realizing that there might be some materials in which a satisfactory non-asbestos containing material could not be obtained, the Consultant has received prior approval from the OWNER before specifying any such asbestos containing material. Those approved materials are the only asbestos containing materials that are exempt from the above prohibition.
3. The CONTRACTOR certifies and affirms their understanding that if any asbestos containing materials not approved by the City of Austin for inclusion into the Project, are determined, as a result of any inspection and sample analysis performed by an individual(s) and/or firm(s) certified and/or licensed to perform such inspection by the United States Government and/or the State of Texas, to have been incorporated into the construction of the Project, or brought onto the site of the Project, the OWNER shall look to the CONTRACTOR for reimbursement of any and all costs incurred in the removal and/or other abatement of said asbestos containing materials.

4. CONTRACTOR further understands that OWNER shall also look to the CONTRACTOR for any and all damages to OWNER which result from the inability of the OWNER to use any portion or all of the Project due to the incorporation of asbestos containing materials that have not been approved by OWNER.
5. CONTRACTOR further understands that OWNER will pursue reimbursement of any said cost and compensation for any said damages from the CONTRACTOR by any and every means within OWNER's right and power.

Signature of Affiant:_____

STATE OF TEXAS
COUNTY OF TRAVIS

ON _____, 20_____, personally appeared _____ _____ and been duly sworn by me, subscribed to the foregoing affidavit and has stated that the facts stated therein are true and correct.

_____
Notary Public, State of Texas

_____
Printed Name of Notary

My Commission Expires: _____

End

NON-USE OF ASBESTOS AFFIDAVIT (CONTRACTOR AFTER CONSTRUCTION)

Section 00681

STATE OF TEXAS
COUNTY OF TRAVIS

BEFORE ME, the undersigned authority, personally appeared the Affiant who, being by me first duly sworn, upon oath deposed and stated:

"My name is _____, hereinafter known as Affiant.

"I am over the age of 18 years and I have never been convicted of a crime. I am the _____ of _____ hereinafter known as CONTRACTOR.

"I am fully competent to make this affidavit. I have personal knowledge of the facts set forth below and they are all true and correct.

"WHEREAS CONTRACTOR was awarded a Contract for, and was the Prime CONTRACTOR for the construction of _____ _____, located at _____, Austin, Texas, hereinafter known as Project, for the City of Austin, Texas, hereinafter known as OWNER, and

"WHEREAS asbestos in a dust form is a recognized health hazard, and

"WHEREAS the OWNER desires not to have any asbestos containing materials used or incorporated into the construction of the Project;

"THEREFORE the CONTRACTOR affirms and understands the following:

1. The CONTRACTOR, any person, firm or organization representing or represented by the CONTRACTOR, or employed by the CONTRACTOR has not caused or allowed any material to be incorporated into the construction of the project, or allowed any building material on the project site that is an asbestos containing material or any other material defined as containing asbestos by any laws, rules or regulation promulgated by the United States Government, the State of Texas or any governmental organization or agency operating under the authority of either of those entities.

2. Realizing that there were some materials in which a satisfactory non-asbestos containing material could not be obtained, the Consultant received prior approval from the OWNER before specifying any such asbestos containing material. Those approved materials were the only asbestos containing materials incorporated into the construction of the Project and are listed below, with their locations:

   _____

   _____

   _____

3. The CONTRACTOR certifies and affirms their understanding that if any asbestos containing materials not approved by the City of Austin for inclusion into the Project, are determined, as a result of any inspection and sample analysis performed by an individual(s) and/or firm(s) certified and/or licensed to perform such inspection by the United States Government and/or the State of Texas, to have been incorporated into the

construction of the Project, or brought onto the site of the Project, the OWNER shall look to the CONTRACTOR for reimbursement of any and all costs incurred in the removal and/or other abatement of said asbestos containing materials.

4. CONTRACTOR further understands that OWNER shall also look to the CONTRACTOR for any and all damages to OWNER which result from the inability of the OWNER to use any portion or all of the Project due to the incorporation of asbestos containing materials that have not been approved by OWNER.

5. CONTRACTOR further understands that OWNER will pursue reimbursement of any said cost and compensation for any said damages from the CONTRACTOR by any and every means within OWNER's right and power.

Signature of Affiant:_____

STATE OF TEXAS
COUNTY OF TRAVIS

ON _____, 20_____, personally appeared _____ _____ and been duly sworn by me, subscribed to the foregoing affidavit and has stated that the facts stated therein are true and correct.

_____
Notary Public, State of Texas

_____
Printed Name of Notary

My Commission Expires: _____

End

General Conditions Table of Contents

ARTICLE 1 - DEFINITIONS 2
ARTICLE 2 - PRELIMINARY MATTERS 5
ARTICLE 3 - CONTRACT DOCUMENTS: INTENT, AMENDING, REUSE 8
ARTICLE 4 - AVAILABILITY OF LANDS; SUBSURFACE AND PHYSICAL CONDITIONS; REFERENCE POINTS 9
ARTICLE 5 - BONDS AND INSURANCE 12
ARTICLE 6 - CONTRACTOR'S RESPONSIBILITIES 15
ARTICLE 7 - OTHER WORK 27
ARTICLE 8 - OWNER'S RESPONSIBILITIES 27
ARTICLE 9 - ENGINEER/ARCHITECT'S STATUS DURING CONSTRUCTION 28
ARTICLE 10 - CHANGES IN THE WORK 30
ARTICLE 11 - CHANGE OF CONTRACT AMOUNT 32
ARTICLE 12 - CHANGE OF CONTRACT TIMES 34
ARTICLE 13 - TESTS AND INSPECTIONS; CORRECTION, REMOVAL OR ACCEPTANCE OF DEFECTIVE WORK 37
ARTICLE 14 - PAYMENTS TO CONTRACTOR AND COMPLETION 40
ARTICLE 15 - SUSPENSION OF WORK AND TERMINATION 45
ARTICLE 16 - DISPUTE RESOLUTION 48
ARTICLE 17 - MISCELLANEOUS 50

ARTICLE 1 – DEFINITIONS

Whenever used in these General Conditions or in the other Contract Documents the following terms have the meanings indicated which are applicable to both the singular and plural thereof:

1.1 Addendum - Written instruments issued by the Contract Awarding Authority which clarify, correct or change the bidding requirements or the Contract Documents prior to the Due Date. "Addenda" is the plural form of Addendum.

1.2 Agreement - Prescribed form, Section 00500.

1.3 Alternative Dispute Resolution - The process by which a disputed Claim may be settled if the OWNER and the CONTRACTOR cannot reach an agreement between themselves, as an alternative to litigation.

1.4 Bid - A complete, properly signed response to an Invitation for Bid that, if accepted, would bind the Bidder to perform the resultant Contract.

1.5 Bidder - A person, firm, or entity that submits a Bid in response to a Solicitation. Any Bidder may be represented by an agent after submitting evidence demonstrating the agent's authority. The agent cannot certify as to his own agency status.

1.6 Bid Documents - The advertisement or Invitation for Bids, instructions to Bidders, the Bid form, the Contract Documents and Addenda.

1.7 Calendar Day - Any day of the week; no days being excepted. Work on Saturdays, Sundays, and/or Legal Holidays shall be coordinated with OWNER.

1.8 Change Directive - A written directive to CONTRACTOR, signed by OWNER, ordering a change in the Work and stating a proposed basis for adjustment, if any, in the Contract Amount or Contract Time, or both. A Change Directive may be used in the absence of total agreement on the terms of a Change Order. A Change Directive does not change the Contract Amount or Contract Time, but is evidence that the parties expect that the change directed or documented by a Change Directive will be incorporated in a subsequently issued Change Order.

1.9 Change Orders - Written agreements entered into between CONTRACTOR and OWNER authorizing an addition, deletion, or revision to the Contract, issued on or after the Execution Date of the Agreement.

1.10 Claim - A written demand seeking, as a matter of right, adjustment or interpretation of Contract terms, payment of money, extension of time or other relief with respect to the terms of the Contract.

1.11 Contract - The binding legal agreement between the OWNER and the CONTRACTOR. The Contract represents the entire and integrated agreement between OWNER and CONTRACTOR for performance of the Work, as evidenced by the Contract Documents.

1.12 Contract Amount - The moneys payable by OWNER to CONTRACTOR for completion of the Work in accordance with the Contract Documents.

1.13 Contract Awarding Authority - A City department authorized to enter into Contracts on behalf of the City.

1.14 Contract Documents - Project Manual, Drawings, Addenda and Change Orders.

1.15 Contract Time - The number of days allowed for completion of the Work as defined by the Contract. When any period is referred to in days, it will be computed to exclude the first and include the last day of such period. A day of twenty-four hours measured from midnight to the next midnight will constitute a day.

1.16 CONTRACTOR - The individual, firm, corporation, or other business entity with whom OWNER has entered into the Contract for performance of the Work.

1.17 Critical Path - The longest series of tasks that runs consecutively from the beginning to the end of the project, as determined by duration and workflow sequence. This longest path sets the managerial standard for how quickly a project can be completed, given appropriate resources.

1.18 Drawings - Those portions of the Contract Documents which are graphic representations of the scope, extent and character of the Work to be furnished and performed by CONTRACTOR and which have been approved by OWNER. Drawings may include plans, elevations, sections, details, schedules and diagrams. Shop Drawings are not Drawings as so defined.

1.19 Due Date - The date and time specified for receipt of Bids.

1.20 Engineer/Architect (E/A) - The OWNER's design professional identified as such in the Contract. The titles of "Architect/Engineer," "Architect" and "Engineer" used in the Contract Documents shall read the same as Engineer/Architect (E/A). Nothing contained in the Contract Documents shall create any contractual or agency relationship between E/A and CONTRACTOR.

1.21 Equal - The terms "equal" or "approved equal" shall have the same meaning.

1.22 Execution Date - Date of last signature of the parties to the Agreement.

1.23 Field Order - A written order issued by Owner's Representative which orders minor changes in the Work and which does not involve a change in the Contract Amount or the Contract Time.

1.24 Final Completion - The point in time when OWNER determines that all Work has been completed and final payment to CONTRACTOR will be made in accordance with the Contract Documents.

1.25 Force Account - a basis of payment for the direct performance of Work with payment based on the actual cost of the labor, equipment and materials furnished and consideration for overhead and profit as set forth in Section 11.5.

1.26 Inspector - The authorized representative of any regulatory agency that has jurisdiction over any portion of the Work.

1.27 Invitation for Bid (IFB) - a Solicitation requesting pricing for a specified Good or Service which has been advertised for Bid in a newspaper and/or the Internet.

1.28 Legal Holidays

1.28.1 The following are recognized by the OWNER:

Holiday	Date Observed
New Year's Day	January 1
Martin Luther King, Jr.'s Birthday	Third Monday in January
President's Day	Third Monday in February
Memorial Day	Last Monday in May
Independence Day	July 4
Labor Day	First Monday in September
Veteran's Day	November 11
Thanksgiving Day	Fourth Thursday in November
Friday after Thanksgiving	Friday after Thanksgiving
Christmas Eve	December 24
Christmas Day	December 25

1.28.2 If a Legal Holiday falls on Saturday, it will be observed on the preceding Friday. If a Legal Holiday falls on Sunday, it will be observed on the following Monday.

1.28.3 Christmas Eve is observed only if it falls on a Monday through Thursday. If Christmas Eve falls on a Friday, that day is observed as the Christmas Day holiday.

1.29 Milestones - A significant event specified in the Contract Documents relating to an intermediate completion date or time prior to Substantial Completion of all the Work.

1.30 Notice to Proceed - A Written Notice given by OWNER to CONTRACTOR fixing the date on which the Contract Times will commence to run and on which CONTRACTOR shall start to perform CONTRACTOR's obligations under the Contract Documents.

1.31 OWNER - City of Austin, Texas, a municipal corporation, home rule city and political subdivision organized and existing under the laws of the State of Texas, acting through the City Manager or his/her designee, officers, agents or employees to administer design and construction of the Project.

1.32 Owner's Representative - The designated representative of the OWNER. The Owner's Representative will be identified at the pre-construction conference.

1.33 Partial Occupancy or Use - Use by OWNER of a substantially completed part of the Work for the purpose for which it is intended (or a related purpose) prior to Substantial Completion of all the Work, provided OWNER and CONTRACTOR have accepted in writing the responsibilities assigned to each of them for payments, retainage if any, security, maintenance, utilities, corrective work, insurance and warranties.

1.34 Project - The subject of the Work and its intended result.

1.35 Project Manual - That portion of the Contract Documents which may include the following: introductory information; bidding requirements, Contract forms and General and Supplemental General Conditions; General Requirements; Specifications; Drawings; MBE/WBE or DBE Procurement Program Package; Project Safety Manual; and Addenda.

1.36 Resident Project Representative - The authorized representative of E/A who may be assigned to the site or any part thereof.

1.37 Shop Drawings - All drawings, diagrams, illustrations, schedules and other data or information which are specifically prepared or assembled by or for CONTRACTOR and submitted by CONTRACTOR as required by the Contract Documents.

1.38 Specifications - Those portions of the Contract Documents consisting of written technical descriptions as applied to the Work, which set forth to CONTRACTOR, in detail, the requirements which must be met by all materials, equipment, construction systems, standards, workmanship, equipment and services in order to render a completed and useful project.

1.39 Solicitation - Solicitation means, as applicable, an Invitation for Bid or a Request for Proposal.

1.40 Substantial Completion - The stage in the progress of the Work when the Work, or designated portion thereof, is sufficiently complete in accordance with the Contract Documents so OWNER can occupy or utilize the Work for its intended use, as evidenced by a Certificate of Substantial Completion approved by OWNER.

1.41 Subcontractor - An individual, firm, corporation, or other business entity having a direct contract with CONTRACTOR for the performance of a portion of the Work under the Contract.

1.42 Sub-Subcontractor - A person or entity who has a direct or indirect contract with a Subcontractor to perform a portion of the work.

1.43 Superintendent - The representative of CONTRACTOR authorized in writing to receive and fulfill instructions from the Owner's Representative, and who shall supervise and direct construction of the Work.

1.44 Supplemental General Conditions - The part of the Contract Documents which amends or supplements the General Conditions. All General Conditions which are not so amended or supplemented remain in full force and effect.

1.45 Supplier - An individual or entity having a direct contract with CONTRACTOR or with any Subcontractor to furnish materials or equipment to be incorporated in the Work by CONTRACTOR or any Subcontractor.

1.46 Time Extension Request - An approved request for time extension on a form acceptable to OWNER.

1.47 Work - The entire completed construction, or the various separately identifiable parts thereof, required to be furnished under the Contract Documents.

1.48 Working Day - Any day of the week, not including Saturdays, Sundays, or Legal Holidays in which conditions under the CONTRACTOR's control will permit work for a continuous period of not less than seven (7) hours between 7:00 a.m. and 6:00 p.m. Upon agreement with Owner's Representative, work on Saturdays, Sundays and/or Legal Holidays may be allowed and will be considered a Working Day.

1.49 Working Hours

1.49.1 Working Day Contract: All Work shall be done between 7:00 a.m. and 6:00 p.m. unless authorized by Owner's Representative. However, emergency work may be done without prior permission as indicated in paragraph 6.11.5. If night Work is authorized and conditions under CONTRACTOR's control will permit Work for a continuous period of not less than seven (7) hours between 12:00 a.m. and 11:59 p.m. it will be considered a Working Day. Night Work may be revoked at any time by OWNER if CONTRACTOR fails to maintain adequate equipment and supervision for the prosecution and control of the night Work.

1.49.2 Calendar Day Contract: All Work shall be done between 7:00 a.m. and 6:00 p.m. unless authorized by Owner’s Representative. However, emergency work may be done without prior permission as indicated in paragraph 6.11.5. Night Work may be revoked at any time by OWNER if CONTRACTOR fails to maintain adequate equipment and supervision for the prosecution and control of the night Work.

1.50 Written Notice - Written communication between OWNER and CONTRACTOR. Written Notice shall be deemed to have been duly served if delivered in person to Owner's Representative or CONTRACTOR's duly authorized representative, or if delivered at or sent by registered or certified mail to the attention of Owner's Representative or CONTRACTOR's duly authorized representative at the last business address known to the party giving notice.

ARTICLE 2 - PRELIMINARY MATTERS

2.1 Delivery of Agreement, Bonds, Insurance, etc.: Within five (5) Working Days after written notification of award of Contract, CONTRACTOR shall deliver to OWNER signed Agreement, Bond(s), Insurance Certificate(s) and other documentation required for execution of Contract.

2.2 Copies of Documents: OWNER shall furnish to CONTRACTOR one (1) Project Manual with original signatures, one (1) copy of the executed Project Manual, one (1) set of Drawings

and one (1) copy of the Contract Documents in .pdf format. Additional copies will be furnished, upon request, at the cost specified in the Supplemental General Conditions."

2.3 Commencement of Contract Times; Notice to Proceed: The Contract Time(s) will begin to run on the day indicated in the Notice to Proceed. Notice to Proceed will be given at any time within sixty (60) calendar days after the Execution Date of the Agreement, unless extended by written agreement of the parties.

2.4 Before Starting Construction:

2.4.1 No Work shall be done at the site prior to the preconstruction conference without OWNER's approval. Before undertaking each part of the Work, CONTRACTOR shall carefully study the Contract Documents to check and verify pertinent figures shown thereon compare accurately to all applicable field measurements. CONTRACTOR shall promptly report in writing to Owner's Representative any conflict, error, ambiguity or discrepancy which CONTRACTOR may discover and shall obtain a written interpretation or clarification from Owner's Representative before proceeding with any Work affected thereby. CONTRACTOR shall be liable to OWNER for failure to report any conflict, error, ambiguity or discrepancy in the Contract Documents of which CONTRACTOR knew or reasonably should have known.

2.4.2 It is mutually agreed between CONTRACTOR and OWNER that successful completion of the Work within the Contract completion date is of primary importance. Therefore, the CONTRACTOR hereby agrees to submit to the Owner's Representative for review and approval, or acceptance, as appropriate, all information requested within this section, including a Baseline Schedule, no later than five working days prior to the preconstruction conference. The Owner's Representative will schedule the preconstruction conference upon the timely submittal of the required documents, unless time is extended by written mutual agreement. CONTRACTOR will submit the following:

.1 A proposed Baseline Schedule developed using Microsoft Project software, unless otherwise approved by Owner's Representative ("Baseline Schedule") to confirm that all Work will be completed within the Contract time. The Baseline Schedule must (i) indicate the times (number of days or dates) for starting and completing the various stages of the Work, including any Milestones specified in the Contract Documents, (ii) identify the Critical Path for completing the Work, (iii) identify when all Subcontractors will be utilized, and (iv) take into consideration any limitations on Working Hours, including baseline Rain Days on Calendar Day Contracts, and (v) be prepared accordance with Section 01310, Schedules and Reports, if applicable; otherwise in accordance with Section 01300, Submittals. This Baseline Schedule, a copy of which shall be made available at the job site(s), must contain sufficient detail to indicate that the CONTRACTOR has properly identified required Work elements and tasks, has provided for a sufficient and proper workforce and integration of Subcontractors, has provided sufficient resources and has considered the proper sequencing of the Work required to result in a successful Project that can be completed within the Contract time;

.2 An organizational chart showing the principals and management personnel who will be involved with the Work, including each one's responsibilities for the Work;

.3 To the extent not set forth in the Section 00400 Statement of Contractor's Experience, a complete listing of the CONTRACTOR's employees proposed for the Work. List each one by name and job title, and show length of employment with CONTRACTOR;

.4 To the extent not set forth in the Section 00410 Statement of Bidder's Safety Experience, a discussion and confirmation of the CONTRACTOR's commitment to safety by providing a copy of its employee's safety handbook and the safety records for the past three years of CONTRACTOR's proposed project manager and Superintendent;

.5 A preliminary schedule of Shop Drawing and sample submittals;

.6 A preliminary schedule of values for all of the Work, subdivided into component parts in sufficient detail to serve as the basis for progress payments during construction. Such prices will be deemed to include an appropriate amount of overhead and profit applicable to each item of Work;

.7 To the extent not set forth in the Section 00400 Statement of Contractor's Experience, a letter designating CONTRACTOR's Superintendent and project manager, and a confirmation of past project experience for the CONTRACTOR's Superintendent and project manager specifically intended for the Work;

.8 A letter from CONTRACTOR and Subcontractor(s) listing salaried specialists. A salaried specialist is anyone except an hourly worker whose wage rate is governed by Section 00830 of this agreement;

.9 A letter designating the "Competent Person(s)" on general safety and excavation safety measures along with certifications or other documentation of the safety representative's qualifications;

.10 If applicable, an excavation safety system plan;

.11 If applicable, a plan illustrating proposed locations of temporary facilities;

.12 A completed Non-Use of Asbestos Affidavit (Prior to Construction);

.13 A letter designating the Texas Registered Professional Land Surveyor for layout of the Work, if the Work requires the services of a surveyor; and

.14 Appropriate safety training certificates for workers that will initially be on site;

.15 A certificate of worker's compensation insurance coverage for all persons providing services on the Project (refer to 5.2.1.3 in Section 00700 for definition of persons providing services on the Project);

.16 A Construction Equipment Emissions Reduction Plan.

2.4.3 Neither the acceptance nor the approval of any of the submittals required in paragraph 2.4.2, above, will constitute the adoption, affirmation, or direction of the CONTRACTOR'S means and methods.

2.5 **Preconstruction Conference:** Prior to commencement of Work at the site, CONTRACTOR must attend a preconstruction conference with Owner's Representative and others, as set forth in Division 1. Additionally, prior to commencement of work, the CONTRACTOR shall host a preconstruction conference for the Subcontractors identified on the originally approved compliance plan, Owner's Representative and others, as set forth in Division 1. The CONTRACTOR shall notify all Subcontractors five (5) working days prior to the preconstruction conference. If the CONTRACTOR has included Subcontractors in the initial preconstruction conference, the additional Subcontractor preconstruction conference will not be required.

2.6 **Initially Acceptable Schedules:** Unless otherwise provided in the Contract Documents, CONTRACTOR shall obtain approval of Owner's Representative on the Baseline Schedule submitted in accordance with paragraph 2.4.2.1 and Division 1 before the first progress payment will be made to CONTRACTOR. The Baseline Schedule must provide for an orderly

progression of the designated portion of the Work to completion within any specified Milestones and Contract Times. Acceptance of the schedule by Owner's Representative will neither impose on Owner's Representative responsibility or liability for the sequencing, scheduling or progress of the Work nor interfere with or relieve CONTRACTOR from CONTRACTOR's full responsibility for such Work. CONTRACTOR's schedule of Shop Drawings and sample submissions must provide an acceptable basis for reviewing and processing the required submittals. CONTRACTOR's schedule of values must conform to the requirements set forth in Division 1.

ARTICLE 3 - CONTRACT DOCUMENTS: INTENT, AMENDING, REUSE

3.1 Intent:

3.1.1 The intent of the Contract Documents is to include all information necessary for the proper execution and timely completion of the Work by CONTRACTOR. The CONTRACTOR will execute the Work described in and reasonably inferable from the Contract Documents as necessary to produce the results indicated by the Contract Documents. The Contract Documents are complementary, and what is required by one shall be as binding as if required by all. In cases of disagreement, the following order of precedence shall generally govern (top item receiving priority of interpretation):

Signed Agreement
Addendum to the Contract Documents, including approved changes
Supplemental General Conditions
General Conditions
Other Bidding Requirements and Contract Forms
Special Provisions to the Standard Technical Specifications
Special Specifications
Standard Technical Specifications
Drawings (figured dimensions shall govern over scaled dimensions)
Project Safety Manual (if applicable),

with the understanding that a common sense approach will be utilized as necessary so that the Contract Documents produce the intended response.

3.1.2 Unless otherwise stated in the Contract Documents, words that have well-known technical or construction industry meanings are used in the Contract Documents in accordance with such recognized meanings.

3.2 Reporting and Resolving Discrepancies: If, during the performance of the Work, CONTRACTOR discovers any conflict, error, ambiguity or discrepancy within the Contract Documents or between the Contract Documents and any provisions of any such law or regulation applicable to the performance of the Work or of any such standard, specification, manual or code or instructions of any Supplier, CONTRACTOR shall report it to Owner's Representative in writing at once, and CONTRACTOR shall not proceed with the Work affected thereby until an amendment or supplement to the Contract Documents has been issued by one of the methods indicated in paragraph 3.3.1 or 3.3.2. CONTRACTOR shall be liable to OWNER for failure to report any such conflict, error, ambiguity or discrepancy of which CONTRACTOR knew or reasonably should have known.

3.3 Amending and Supplementing Contract Documents:

3.3.1 The Contract Documents may be amended to provide for additions, deletions and revisions in the Work or to modify the terms and conditions thereof in one or more of the following ways:

.1 Change Order.

.2 Change Directive.

.3 Time Extension Request.

3.3.2 In addition, the requirements of the Contract Documents may be supplemented, and minor variations and deviations in the Work may be authorized, in one or more of the following ways:

.1 Field Order.

.2 Review of a Shop Drawing or sample.

.3 Written interpretation or clarification.

3.4 Reuse of Documents Prohibited: CONTRACTOR and any Subcontractor or Supplier or other person or organization performing or furnishing any of the Work under a direct or indirect contract with OWNER: (i) shall not have or acquire any title to or ownership rights in any of the Drawings, Specifications or other documents (or copies of any thereof) prepared by or bearing the seal of E/A or E/A's consultant, and (ii) shall not reuse any of such Drawings, Specifications, other documents or copies on extensions of the Project or any other project without written consent of OWNER and E/A.

3.5 In the event of the breach by the OWNER or CONTRACTOR of any of its obligations under the Contract, so as to support a claim by the other party, the provisions of this Contract will be equitably construed to allow the resolution of such a claim and all of the other provisions of this Contract shall continue in full force and effect as to the rights, responsibilities, and remedies of the OWNER and CONTRACTOR.

ARTICLE 4 - AVAILABILITY OF LANDS; SUBSURFACE AND PHYSICAL CONDITIONS; REFERENCE POINTS

4.1 **Availability of Lands:** The OWNER will provide access to all land and interests in land required for the Work and will notify CONTRACTOR of any restrictions in such access. CONTRACTOR may make a claim if OWNER fails to provide timely access to the Work. CONTRACTOR must obtain any additional temporary construction facilities, stockpiling or storage sites not otherwise provided.

4.2 **Subsurface and Physical Conditions:**

4.2.1 CONTRACTOR specifically represents that it has carefully examined the plans, the geotechnical report, if any, and the site of the proposed Work and is thoroughly familiar with all of the conditions surrounding construction of the Project, having had the opportunity to conduct any and all additional inquiry, tests and investigation that he/she deems necessary and proper. CONTRACTOR acknowledges the receipt of the geotechnical report, if any, and agrees that the report, while it is an accurate record of the geotechnical conditions at the boring locations, is not a guarantee of specific site conditions which may vary between boring locations.

4.2.2 CONTRACTOR must notify OWNER in writing as soon as reasonably possible, but no later than three (3) calendar days, if unforeseen conditions are encountered at the site which are (i) subsurface or otherwise concealed physical conditions that differ materially from those indicated in the Contract Documents or (ii) unknown physical conditions of an unusual nature, that differ materially from those normally encountered in the type of work being performed under this Contract. CONTRACTOR may not disturb the conditions until OWNER conducts an investigation. Owner's Representative and E/A will promptly investigate such

conditions with E/A. If it is determined that such conditions differ materially and cause an increase or decrease in the CONTRACTOR's cost of or time required for performance of any part of the Work, Owner's Representative will recommend an equitable adjustment in the Contract Amount or Contract Time, or both. If it is determined that such conditions are not materially different from those indicated in the Contract Documents, Owner's Representative will notify CONTRACTOR in writing of such findings and the Contract will not be adjusted. CONTRACTOR may dispute such a determination in accordance with Article 16.

4.2.3 Notwithstanding any other provision of this Contract, CONTRACTOR is solely responsible for the location and protection of any and all public utility lines and utility customer service lines in the Work area. "Public utility lines" means the utility distribution and supply system, and "utility customer service lines" means the utility lines connecting customers to the utility distribution and collection system. Generally, existing utility customer service line connections are not shown on the Drawings. CONTRACTOR shall notify "One Call" and exercise due care to locate, mark, uncover and otherwise protect all such lines in the construction zone and any of CONTRACTOR's work or storage areas. CONTRACTOR's responsibility for the location and protection of utilities is primary and nondelegable. CONTRACTOR shall indemnify or reimburse such expenses or costs (including fines that may be levied against OWNER) that may result from unauthorized or accidental damage to all public lines and utility customer service lines in the work area. OWNER reserves the right to repair any damage CONTRACTOR causes to such utilities at CONTRACTOR's expense. If a public line and/or customer service line is damaged by CONTRACTOR, CONTRACTOR shall give verbal notice within one (1) hour and written notice within twenty-four (24) hours to the Owner's Representative.

4.2.4 CONTRACTOR shall take reasonable precaution to avoid disturbing primitive records and antiquities of archaeological, paleontological or historical significance. No objects of this nature shall be disturbed without written permission of OWNER and Texas Historical Commission. When such objects are uncovered unexpectedly, CONTRACTOR shall stop all Work in close proximity and notify Owner's Representative and Texas Historical Commission of their presence and shall not disturb them until written permission and permit to do so is granted. All primitive rights and antiquities uncovered on OWNER's property shall remain property of State of Texas, Texas Historical Commission conforming to Texas Natural Resources Code. If it is determined by OWNER, in consultation with Texas Historical Commission, that exploration or excavation of primitive records or antiquities on Project site is necessary to avoid loss, CONTRACTOR shall cooperate in salvage work attendant to preservation. If the Work stoppage or salvage work causes an increase in CONTRACTOR's cost of, or time required for, performance of the Work, the Contract Amount and/or Contract Time will be equitably adjusted.

4.3 Reference Points: Unless otherwise specified, all control lines and bench marks suitable for use in layout will be furnished by OWNER. Lay out of the Work shall be performed in accordance with Division 1. Controls, bench marks and property boundary markers shall be carefully preserved by CONTRACTOR by use of flags, staffs or other visible devices and in case of destruction or removal by CONTRACTOR or its employees, such controls and bench marks shall be replaced by a Registered Professional Land Surveyor at CONTRACTOR's expense. City of Austin survey monuments damaged by CONTRACTOR will be reestablished by OWNER at CONTRACTOR's expense.

4.4 Hazardous Materials:

4.4.1 To the extent provided by applicable law, OWNER shall be responsible for any hazardous material uncovered or revealed at the site which was not shown,

indicated or identified in the Contract Documents to be within the scope of the Work and which may present a substantial danger to persons or property exposed thereto in connection with the Work at the site. CONTRACTOR shall immediately notify Owner's Representative of any suspected hazardous materials encountered before or during performance of the Work and shall take all necessary precautions to avoid further disturbance of the materials.

4.4.2 CONTRACTOR shall be responsible for any hazardous materials brought to the site by CONTRACTOR, Subcontractor, Suppliers or anyone else for whom CONTRACTOR is responsible.

4.4.3 No asbestos-containing materials shall be incorporated into the Work or brought on Project site without prior approval of OWNER. The CONTRACTOR shall not knowingly use, specify, request or approve for use any asbestos containing materials or lead-based paint without the OWNER'S written approval. When a specific product is specified, the CONTRACTOR shall endeavor to verify that the product does not include asbestos containing material.

4.4.4 Refer to Division 1 for hazardous material definitions and procedures.

.1 Unless otherwise expressly provided in the Contract Documents to be part of the Work, CONTRACTOR is not responsible for any unexpected Hazardous Materials encountered at the site. Upon encountering any Hazardous Conditions, CONTRACTOR must stop Work immediately in the affected area and duly notify OWNER and, if required by applicable law or regulations, all government or quasi-government entities with jurisdiction over the Project or site.

.2 Upon receiving notice of the presence of suspected Hazardous Materials, OWNER shall take the necessary measures required to ensure that the Hazardous Materials are remediated or rendered harmless. Such necessary measures shall include OWNER retaining qualified independent experts to (i) ascertain whether Hazardous Materials have actually been encountered, and, if they have been encountered, (ii) prescribe the remedial measures that OWNER must take either to remove the Hazardous Materials or render the Hazardous Materials harmless.

.3 CONTRACTOR shall be obligated to resume Work at the affected area of the Project only after OWNER’s Representative provides written certification that (i) the Hazardous Materials have been removed or rendered harmless and (ii) all necessary approvals have been obtained from all government and quasi-government entities having jurisdiction over the Project or site. The CONTRACTOR shall be responsible for continuing the Work in the unaffected portion of the Project and site.

.4 CONTRACTOR will be entitled, in accordance with these General Conditions, to an adjustment in its Contract Amount and/or Contract Time(s) to the extent CONTRACTOR’s cost and/or time of performance have been adversely impacted by the presence of Hazardous Materials.

.5 Notwithstanding the preceding provisions of this Section 4.1, OWNER is not responsible for Hazardous Materials introduced to the Site by CONTRACTOR, Subcontractors or anyone for whose acts they may be liable. CONTRACTOR shall indemnify, defend and hold harmless OWNER and OWNER’s officers, directors, employees and agents from and against all claims, losses, damages, liabilities and expenses, including attorneys’ fees and expenses, arising out of or resulting from those hazardous materials introduced to the site by CONTRACTOR, Subcontractors or anyone for whose acts they may be liable.

4.4.5 CONTRACTOR shall be responsible for use, storage and remediation of any hazardous materials brought to the Site by CONTRACTOR, Subcontractors, Suppliers or anyone else for whom CONTRACTOR is responsible.

ARTICLE 5 - BONDS AND INSURANCE

5.1 Surety and Insurance Companies: All bonds and insurance required by the Contract Documents shall be obtained from solvent surety or insurance companies that are duly licensed by the State of Texas and authorized to issue bonds or insurance policies for the limits and coverages required by the Contract Documents. The bonds shall be in a form acceptable to OWNER and shall be issued by a surety which complies with the requirements of Texas Insurance Code, Title 12, Chapter 3503. The surety must obtain reinsurance for any portion of the risk that exceeds 10% of the surety's capital and surplus. For bonds exceeding $100,000, the surety must also hold a certificate of authority from the U.S. Secretary of the Treasury or have obtained reinsurance for any liability in excess of $1,000,000 from a reinsurer that is authorized as a reinsurer in Texas or holds a certificate of authority from the U.S. Secretary of the Treasury. In the event that the proposed surety for a contract award in excess of $100,000 does not hold a certificate of authority from the U.S. Secretary of the Treasury and/or its proposed reinsurer does not hold a certificate of authority from the U.S. Secretary of the Treasury, the OWNER may require additional financial solvency information from the Bidder/Contractor and the proposed surety company and/or reinsurer as part of the 00400 Statement of Bidders Experience and determination of bidder responsibility in the award of the Contract.

5.2 Workers' Compensation Insurance Coverage:

5.2.1 Definitions:

.1 Certificate of coverage ("certificate") - A copy of a certificate of insurance, a certificate of authority to self-insure issued by the commission, or a coverage agreement (DWC-81, DCW-82, DCW-83, or DCW84), showing statutory workers' compensation insurance coverage for the person's or entity's employees providing services on the Project, for the duration of the Project.

.2 Duration of the Project - includes the time from the beginning of the Work on the Project until the CONTRACTOR's/ person's Work on the Project has been completed and accepted by OWNER.

.3 Persons providing services on the Project ("subcontractor" in Texas Labor Code, Section 406.096) - includes all persons or entities performing all or part of the services the CONTRACTOR has undertaken to perform on the Project, regardless of whether that person contracted directly with the CONTRACTOR and regardless of whether that person has employees. This includes, without limitation, independent contractors, Subcontractors, leasing companies, motor carriers, owner-operators, employees of any such entity, or employees of any entity which furnishes persons to provide services on the Project. "Services" include, without limitation, providing, hauling, or delivering equipment or materials, or providing labor, transportation, or other service related to a project. "Services" does not include activities unrelated to the Project, such as food/beverage vendors, office supply deliveries, and delivery of portable toilets.

5.2.2 CONTRACTOR shall provide coverage, based on proper reporting of classification codes and payroll amounts and filing of any coverage agreements, which meets the statutory requirements of Texas Labor Code, Section 401.011(44) for all

employees of the CONTRACTOR providing services on the Project, for the duration of the Project.

5.2.3 CONTRACTOR must provide a certificate of coverage to OWNER prior to being awarded the Contract.

5.2.4 If the coverage period shown on the CONTRACTOR's current certificate of coverage ends during the duration of the Project, the CONTRACTOR must, prior to the end of the coverage period, file a new certificate of coverage with OWNER showing that coverage has been extended.

5.2.5 CONTRACTOR shall obtain from each person providing services on the Project, and provide to OWNER:

.1 A certificate of coverage, prior to that person beginning Work on the Project, so OWNER will have on file certificates of coverage showing coverage for all persons providing services on the Project; and

.2 No later than seven (7) days after receipt by CONTRACTOR, a new certificate of coverage showing extension of coverage, if the coverage period shown on the current certificate of coverage ends during the duration of the Project.

5.2.6 CONTRACTOR shall retain all required certificates of coverage for the duration of the Project and for one (1) year thereafter.

5.2.7 CONTRACTOR shall notify OWNER in writing by certified mail or personal delivery, within ten (10) days after CONTRACTOR knew or should have known, of any change that materially affects the provision of coverage of any person providing services on the Project.

5.2.8 CONTRACTOR shall post on each Project site a notice, in the text, form and manner prescribed by the Texas Workers' Compensation Commission, informing all persons providing services on the Project that they are required to be covered, and stating how a person may verify coverage and report lack of coverage.

5.2.9 CONTRACTOR shall contractually require each person with whom it contracts to provide services on a Project, to:

.1 Provide coverage, based on proper reporting of classification codes and payroll amounts and filing of any coverage agreements, which meets the statutory requirements of Texas Labor Code, Section 401.011(44) for all of its employees providing services on the Project, for the duration of the Project;

.2 Provide to CONTRACTOR, prior to that person beginning Work on the Project, a certificate of coverage showing that coverage is being provided for all employees of the person providing services on the Project, for the duration of the Project;

.3 Provide CONTRACTOR, prior to the end of the coverage period, a new certificate of coverage showing extension of coverage, if the coverage period shown on the current certificate of coverage ends during the duration of the Project;

.4 Obtain from each other person with whom it contracts, and provide to CONTRACTOR: a) a certificate of coverage, prior to the other person beginning Work on the Project; and b) a new certificate of coverage showing extension of coverage, prior to the end of the coverage period, if the coverage period shown on the current certificate of coverage ends during the duration of the Project;

.5 Retain all required certificates of coverage on file for the duration of the Project and for one (1) year thereafter;

.6 Notify OWNER in writing by certified mail or personal delivery, within ten (10) days after the person knew or should have known, of any change that materially affects the provision of coverage of any person providing services on the Project; and

.7 Contractually require each person with whom it contracts, to perform as required by paragraphs 5.2.9.1 - 5.2.9.7, with the certificates of coverage to be provided to the person for whom they are providing services.

5.2.10 By signing this Contract or providing or causing to be provided a certificate of coverage, CONTRACTOR is representing to OWNER that all employees of the CONTRACTOR who will provide services on the Project will be covered by workers' compensation coverage for the duration of the Project, that the coverage will be based on proper reporting of classification codes and payroll amounts, and that all coverage agreements will be filed with the appropriate insurance carrier or, in the case of a self-insured, with the Texas Worker's Compensation Commission's Division of Self- Insurance Regulation. Providing false or misleading information may subject CONTRACTOR to administrative penalties, criminal penalties, civil penalties, or other civil actions.

5.2.11 CONTRACTOR's failure to comply with any of these provisions is a breach of Contract by CONTRACTOR which entitles OWNER to declare the Contract void if CONTRACTOR does not remedy the breach within ten (10) days after receipt of notice of breach from OWNER.

5.3 Other Bond and Insurance Requirements: For additional insurance requirements, refer to the Supplemental General Conditions.

5.4 Bonds:

5.4.1 General.

.1 Bonds, when required, shall be executed on forms furnished by or acceptable to OWNER. All bonds signed by an agent must be accompanied by a certified copy of such agent's authority to act.

.2 If the surety on any bond furnished by CONTRACTOR is declared bankrupt or becomes insolvent or its right to do business is terminated in the State of Texas or it ceases to meet the requirements of the preceding paragraph, CONTRACTOR shall within ten (10) days thereafter substitute another bond and surety, both of which must be acceptable to OWNER.

.3 When Performance Bonds and/or Payment Bonds are required, each shall be issued in an amount of one hundred percent (100%) of the Contract Amount as security for the faithful performance and/or payment of all CONTRACTOR's obligations under the Contract Documents. Performance Bonds and Payment Bonds shall be issued by a solvent surety company authorized to do business in the State of Texas, and shall meet any other requirements established by law or by OWNER pursuant to applicable law. Any surety duly authorized to do business in Texas may write Performance and Payment Bonds on a project without reinsurance to the limit of ten percent (10%) of its capital and surplus. Such a surety must reinsure any obligations over ten percent (10%).

5.4.2 Performance Bond.

.1 If the Contract Amount exceeds $100,000, CONTRACTOR shall furnish OWNER with a Performance Bond in the form set out in Section 00610.

.2 If the Contract Amount exceeds $25,000 but is less than or equal to $100,000, CONTRACTOR shall furnish OWNER with a Performance Bond in the form set out in Section 00610, unless the original Contract Time is 60 Calendar

Days/40 Working Days or less, in which case CONTRACTOR can agree to the following terms and conditions for payment in lieu of providing a Performance Bond: no moneys will be paid to CONTRACTOR until completion and acceptance of the Work by OWNER; CONTRACTOR shall be entitled to receive 95% of the Contract Amount following Final Completion, and the remaining 5% of the Contract Amount following the one (1) year warranty period.

.3 If the Contract Amount is less than or equal to $25,000, CONTRACTOR will not be required to furnish a Performance Bond; provided that no moneys will be paid to CONTRACTOR until completion and acceptance of the Work by OWNER under the following terms and conditions: CONTRACTOR shall be entitled to receive 95% of the Contract Amount following Final Completion, and the remaining 5% of the Contract Amount following the one (1) year warranty period.

.4 If a Performance Bond is required to be furnished, it shall extend for the one (1) year warranty period.

5.4.3 Payment Bond.

.1 If the Contract Amount exceeds $50,000, CONTRACTOR shall furnish OWNER with a Payment Bond in the form set out in Section 00620.

.2 If the Contract Amount is less than or equal to $50,000, CONTRACTOR will not be required to furnish a Payment Bond; provided that no moneys will be paid to CONTRACTOR until completion and acceptance of the Work by OWNER under the terms and conditions specified in paragraph 5.4.2.3.

5.4.4 **Maintenance Bond:** If the Contract Documents contemplate a period of maintenance beyond the one (1) year contractual warranty period, OWNER agrees that any bond to be required for such maintenance work will be in the amount of the maintenance work during any extended maintenance period.

ARTICLE 6 - CONTRACTOR'S RESPONSIBILITIES

6.1 Supervision and Superintendence:

6.1.1 CONTRACTOR shall supervise, inspect and direct the Work competently and efficiently, devoting such attention thereto and applying such skills and expertise as may be necessary to perform the Work in accordance with the Contract Documents. CONTRACTOR shall be solely responsible for the means, methods, techniques, sequences and procedures of construction. CONTRACTOR shall be responsible to see that the completed Work complies accurately with the Contract Documents.

6.1.2 CONTRACTOR shall have an English-speaking, competent Superintendent on the Work at all times that work is in progress. The Superintendent will be CONTRACTOR's representative on the Work and shall have the authority to act on the behalf of CONTRACTOR. All communications given to the Superintendent shall be as binding as if given to CONTRACTOR. Either CONTRACTOR or the Superintendent shall provide a cellular telephone number and an emergency and home telephone number at which one or the other may be reached if necessary when work is not in progress. The Superintendent must be an employee of the CONTRACTOR, unless such requirement is waived in writing by the Owner's Representative. If the CONTRACTOR proposes a management structure with a Project Manager supervising, directing, and managing construction of the work in addition to or in substitution of a Superintendent, the requirements of these Construction Documents with respect to the Superintendent shall likewise apply to any such Project Manager.

.1 CONTRACTOR shall present the resume of the proposed Superintendent to the Owner's Representative showing evidence of experience and successful superintendence and direction of work of a similar scale and complexity. If, in the opinion of the Owner's Representative, the proposed Superintendent does not indicate sufficient experience in line with the Work, he/she will not be allowed to be the designated Superintendent for the Work.

.2 The Superintendent shall not be replaced without Written Notice to Owner's Representative. If CONTRACTOR deems it necessary to replace the Superintendent, CONTRACTOR shall provide the necessary information for approval, as stated above, on the proposed new Superintendent.

.3 A qualified substitute Superintendent may be designated in the event that the designated Superintendent is temporarily away from the Work, but not to exceed a time limit acceptable to the Owner's Representative. CONTRACTOR shall replace the Superintendent upon OWNER's request in the event the Superintendent is unable to perform to OWNER's satisfaction.

6.2 Labor, Materials and Equipment:

6.2.1 CONTRACTOR shall maintain a work force adequate to accomplish the Work within the Contract Time. CONTRACTOR agrees to employ only orderly and competent workers, skillful in performance of the type of Work required under this Contract. CONTRACTOR, Subcontractors, Sub-subcontractors, and their employees may not use or possess any alcoholic or other intoxicating beverages, illegal drugs or controlled substances while on the job or on OWNER's property, nor may such workers be intoxicated, or under the influence of alcohol or drugs, on the job. Subject to the applicable provisions of Texas law, CONTRACTOR, Subcontractors, Sub-subcontractors, and their employees may not use or possess any firearms or other weapons while on the job or on OWNER'S property. If OWNER or Owner's Representative notifies CONTRACTOR that any worker or representative of Contractor is incompetent, disorderly, abusive, or disobedient, has knowingly or repeatedly violated safety regulations, has possessed any firearms in contravention of the applicable provisions of Texas law, or has possessed or was under the influence of alcohol or drugs on the job, CONTRACTOR shall immediately remove such worker or representative, including an officer or owner of CONTRACTOR, from performing Contract Work, and may not employ such worker or representative again on Contract Work without OWNER's prior written consent. CONTRACTOR shall at all times maintain good discipline and order on or off the site in all matters pertaining to the Project. Workers on Project shall be paid not less than wage rates, including fringe benefits, as published by the Department of Labor (DOL) for Building Construction and Heavy and Highway Trades "AS APPLICABLE" and/or the $13.03 minimum Wage required by City of Austin Ordinance No. 20160324-015, whichever is higher. The Total Minimum Wage required can be met using any combination of cash and non-cash qualified fringe benefits provided the cash component meets or exceeds the $13.03 minimum wage required.

6.2.2 Unless otherwise specified in Division 1, CONTRACTOR shall provide and pay for all materials, equipment, labor, transportation, construction equipment and machinery, tools, appliances, fuel, power, light, heat, telephone, water, sanitary facilities, temporary facilities and all other facilities and incidentals necessary for the furnishing, performance, testing, start-up and completion of the Work.

6.2.3 All materials and equipment shall be of good quality and new (including new products made of recycled materials, pursuant to Section 361.426 of the Texas Health & Safety Code), except as otherwise provided in the Contract Documents. If required by Owner's Representative, CONTRACTOR shall furnish satisfactory evidence (reports of required tests, manufacturer's certificates of compliance with

material requirements, mill reports, etc.) as to the kind and quality of materials and equipment. All materials and equipment shall be applied, installed, connected, erected, used, cleaned and conditioned in accordance with instructions of the applicable Supplier, except as otherwise provided in the Contract Documents.

6.2.4 Substitutes and "Approved Equal" Items:

.1 Whenever an item of material or equipment is specified or described in the Contract Documents by using the name of a proprietary item or the name of a particular Supplier, the specification or description is intended to establish the type, function and quality required. Unless the specification or description contains words reading that no like, equivalent or "approved equal" item or no substitution is permitted, other items of material or equipment of other Suppliers may be submitted by CONTRACTOR, at CONTRACTOR'S sole risk, including disruptions to the Critical Path of the Progress Schedule, to E/A through Owner's Representative under the following circumstances:

.1.1 "Approved Equal": If in E/A's sole discretion an item of material or equipment proposed by CONTRACTOR is functionally equal to that named and sufficiently similar so that no change in related Work will be required, it may be considered by E/A as an "approved equal" item, in which case review of the proposed item may, in E/A's sole discretion, be accomplished without compliance with some or all of the requirements for evaluation of proposed substitute items. CONTRACTOR shall provide E/A with the documentation required for E/A to make its determination.

.1.2 Substitute Items: If in E/A's sole discretion an item of material or equipment proposed by CONTRACTOR does not qualify as an "approved equal" item under subparagraph 6.2.4.1.1, it will be considered a proposed substitute item. CONTRACTOR shall submit sufficient information as provided in Division 1 to allow E/A to determine that the item of material or equipment proposed is essentially equivalent to that named and a substitute therefor.

.2 Substitute Construction Methods and Procedures: If a specific means, method, technique, sequence or procedure of construction is shown or indicated in and expressly required by the Contract Documents, CONTRACTOR may, at CONTRACTOR'S sole risk, including disruptions to the Critical Path of the Progress Schedule, with prior approval of E/A furnish or utilize a substitute means, method, technique, sequence, or procedure of construction. CONTRACTOR shall submit sufficient information to Owner's Representative to allow E/A, in E/A's sole discretion, to determine that the substitute proposed is equivalent to that expressly called for by the Contract Documents. The procedure for review by E/A will be same as that provided for substitute items in Division 1.

.3 E/A's Evaluation: E/A will be allowed a reasonable time within which to evaluate each proposal or submittal made pursuant to subparagraphs 6.2.4.1.1 and 6.2.4.1.2. E/A will be the sole judge of acceptability. No "approved equal" or substitute shall be ordered, installed, or utilized until E/A's review is complete, which will be evidenced by either a Change Order or completion of the Shop Drawing review procedure. OWNER may require CONTRACTOR to furnish at CONTRACTOR's expense a special performance guarantee or other surety bond with respect to any "approved equal" or substitute or for any other delay or disruption to the Critical Path of the Project Schedule attributable to any such substitution. OWNER shall not be responsible for any delay due to review time for any "approved equal" or substitute.

.4 CONTRACTOR's Expense: All data and documentation to be provided by CONTRACTOR in support of any proposed "approved equal" or substitute item will be at CONTRACTOR's expense.

.5 The approval of the E/A will not relieve the CONTRACTOR from primary responsibility and liability for the suitability and performance of any proposed substitute item, method or procedure and will not relieve CONTRACTOR from its primary responsibility and liability for curing defective Work and performing warranty work, which the CONTRACTOR shall cure and perform, regardless of any claim the CONTRACTOR may choose to advance against the E/A or manufacturer.

6.2.5 CONTRACTOR agrees to assign to OWNER any rights it may have to bring antitrust suits against its Suppliers for overcharges on materials incorporated in the Project growing out of illegal price fixing agreements. CONTRACTOR further agrees to cooperate with OWNER should OWNER wish to prosecute suits against Suppliers for illegal price fixing.

6.3 Progress Schedule: Unless otherwise provided in Division 1, CONTRACTOR shall adhere to the Baseline Schedule established in accordance with paragraph 2.6 as it may be adjusted from time to time as provided below:

6.3.1 CONTRACTOR shall submit to Owner's Representative for review and approval any proposed adjustments in the Progress Schedule that will not change the Contract Times or Milestones on a monthly basis. Any such proposed adjustments must be substantiated with documentation of any changes to the underlying logic of the Progress Schedule. CONTRACTOR's Progress Schedule must show how the CONTRACTOR will consistently advance the progress of the Work in accordance with the Critical Path of the Work and the Contract Time or Milestones. Such adjustments will conform generally to the Progress Schedule then in effect and additionally will comply with any provisions of Division 1 applicable thereto.

6.3.2 Proposed adjustments in the Progress Schedule that will change the Contract Times or Milestones shall be submitted in accordance with the requirements of Article 12. Any such proposed adjustments must be substantiated with documentation of any changes to the underlying logic of the Progress Schedule. Such adjustments may only be made by a Change Order or Time Extension Request in accordance with Article 12.

6.4 Concerning Subcontractors, Suppliers and Others:

6.4.1 Assignment: CONTRACTOR agrees to retain direct control of and give direct attention to the fulfillment of this Contract. CONTRACTOR agrees not to, by Power of Attorney, or otherwise, assign said Contract without the prior written consent of OWNER. In addition, without OWNER'S written consent, the CONTRACTOR will not subcontract the performance of the entire Work or the supervision and direction of the Work.

6.4.2 Award of Subcontracts for Portions of the Work: CONTRACTOR shall not employ any Subcontractor, Supplier or other person or organization, whether initially or as a substitute, against whom OWNER may have reasonable objection. OWNER will communicate such objections by Written Notice. If OWNER requires a change without good cause of any Subcontractor, person or organization previously accepted by OWNER, the Contract Amount shall be increased or decreased by the difference in the cost occasioned by any such change, and appropriate Change Order shall be issued. CONTRACTOR shall not substitute any Subcontractor, person or organization that has been accepted by OWNER, unless the substitute has been accepted in writing by OWNER. No acceptance by OWNER of any Subcontractor,

Supplier or other person or organization shall constitute a waiver of any right of OWNER to reject defective Work.

6.4.3 CONTRACTOR shall enter into written agreements with all Subcontractors and Suppliers which specifically binds the Subcontractors or Suppliers to the applicable terms and conditions of the Contract Documents for the benefit of OWNER and E/A. The OWNER reserves the right to specify that certain requirements shall be adhered to by all Subcontractors and Sub-subcontractors as indicated in other portions of the Contract Documents and these requirements shall be made a part of the agreement between CONTRACTOR and Subcontractor or Supplier. Subject to and in accordance with the above requirements, the CONTRACTOR must provide and will be deemed for all purposes to have provided in its contracts with major Subcontractors or Suppliers on the Project (those contracts of more than $10,000) the following specific provision: alternative dispute resolution (paragraphs 16.2 and 16.3), which shall be mandatory in the event of a subcontractor or supplier claim and a prerequisite for the submission of any derivative claim. The CONTRACTOR's standard subcontract form is subject to the OWNER's review and approval. The OWNER may request and the CONTRACTOR will provide within five (5) working days a copy of any subcontract requested by the OWNER.

6.4.4 CONTRACTOR shall be fully responsible to OWNER for all acts and omissions of the Subcontractors, Suppliers and other persons and organizations performing or furnishing any of the Work under a direct or indirect contract with CONTRACTOR just as CONTRACTOR is responsible for CONTRACTOR's own acts and omissions. Nothing in the Contract Documents shall create for the benefit of any such Subcontractor, Supplier or other person or organization any contractual relationship between OWNER and any such Subcontractor, Supplier or other person or organization, nor shall it create any obligation on the part of OWNER or E/A to pay or to see to the payment of any moneys due any such Subcontractor, Supplier or other person or organization except as may otherwise be required by laws and regulations.

6.4.5 CONTRACTOR shall be solely responsible for efficiently scheduling and coordinating the Work of Subcontractors, Suppliers and other persons and organizations performing or furnishing any of the Work under a direct or indirect contract with CONTRACTOR in order to avoid any delays or inefficiencies in the prosecution of the Work. CONTRACTOR shall require all Subcontractors, Suppliers and such other persons and organizations performing or furnishing any of the Work to communicate with Owner's Representative through CONTRACTOR.

6.4.6 The divisions and sections of the Specifications and the identifications of any Drawings shall not control CONTRACTOR in dividing or delineating the Work to be performed by any specific trade.

6.4.7 CONTRACTOR shall pay each Subcontractor and Supplier their appropriate share of payments made to CONTRACTOR not later than ten (10) Calendar Days of CONTRACTOR's receipt of payment from OWNER. Upon request from Owner, the CONTRACTOR has two (2) Working Days to provide documentation verifying Payment to Subcontractor(s). The CONTRACTOR is required to notify the Subcontractor(s) in writing of rejection of Application for Payment within two (2) Working Days following notification by Owner. Failure of CONTRACTOR to make payments to Subcontractors or for labor, materials or equipment in accordance to this contract, may be cause to reject future Bids by the CONTRACTOR in accordance with Section 00100 9.B.4 and may be cause to reject payment in accordance with 00700 14.4.1.3.

6.4.8 To the extent allowed by Texas law, the OWNER shall be deemed to be a third party beneficiary to each subcontract and may, if OWNER elects, following a termination of the CONTRACTOR, require that the Subcontractor(s) perform all or a portion of

unperformed duties and obligations under its subcontract(s) for the benefit of the OWNER, rather than the CONTRACTOR; however, if the OWNER requires any such performance by a Subcontractor for the OWNER's direct benefit, then the OWNER shall be bound and obligated to pay such Subcontractor the reasonable value for all Work performed by such Subcontractor to the date of the termination of the CONTRACTOR, less previous payments, and for all Work performed thereafter. In the event that the OWNER elects to invoke its right under this section, OWNER will provide notice of such election to the CONTRACTOR and the affected Subcontractor(s).

6.5 Patent Fees and Royalties:

6.5.1 CONTRACTOR shall be responsible at all times for compliance with applicable patents or copyrights encompassing, in whole or in part, any design, device, material, or process utilized, directly or indirectly, in the performance of the Work or the formulation or presentation of its Bid.

6.5.2 CONTRACTOR shall pay all royalties and license fees and shall provide, prior to commencement of Work hereunder and at all times during the performance of same, for lawful use of any design, device, material or process covered by letters, patent or copyright by suitable legal agreement with the patentee, copyright holder, or their duly authorized representative whether or not a particular design, device, material, or process is specified by OWNER.

6.5.3 CONTRACTOR shall defend all suits or claims for infringement of any patent or copyright and shall save OWNER harmless from any loss or liability, direct or indirect, arising with respect to CONTRACTOR's process in the formulation of its Bid or the performance of the Work or otherwise arising in connection therewith. OWNER reserves the right to provide its own defense to any suit or claim of infringement of any patent or copyright in which event CONTRACTOR shall indemnify and save harmless OWNER from all costs and expenses of such defense as well as satisfaction of all judgments entered against OWNER.

6.5.4 OWNER shall have the right to stop the Work and/or terminate this Agreement at any time in the event CONTRACTOR fails to disclose to OWNER that CONTRACTOR's work methodology includes the use of any infringing design, device, material or process.

6.6 Permits, Fees: Unless otherwise provided in the Supplemental General Conditions, CONTRACTOR shall obtain and pay for all construction permits, licenses and fees required for prosecution of the Work.

6.7 Laws and Regulations:

6.7.1 CONTRACTOR shall give all notices and comply with all laws and regulations applicable to furnishing and performing the Work, including arranging for and obtaining any required inspections, tests, approvals or certifications from any public body having jurisdiction over the Work or any part thereof. Except where otherwise expressly required by applicable laws and regulations, neither OWNER nor E/A shall be responsible for monitoring CONTRACTOR's compliance with any laws and regulations.

6.7.2 Maintaining clean water, air and earth or improving thereon shall be regarded as of prime importance. CONTRACTOR shall plan and execute its operations in compliance with all applicable Federal, State and local laws and regulations concerning control and abatement of water pollution and prevention and control of air pollution.

6.7.3 If CONTRACTOR performs any Work knowing or having reason to know that it is contrary to laws or regulations, CONTRACTOR shall bear all claims, costs, losses and damages arising therefrom; however, it shall not be CONTRACTOR's primary

responsibility to make certain that the Specifications and Drawings are in accordance with laws and regulations, but this does not relieve CONTRACTOR of CONTRACTOR's obligations under Article 3.

6.8 Taxes:

6.8.1 CONTRACTOR shall pay only those sales, consumer, use and other similar taxes required to be paid by CONTRACTOR in accordance with the laws and regulations of the State of Texas in the performance of this public works contract.

6.8.2 OWNER is an exempt organization as defined by Chapter 11 of the Property Tax Code of Texas and is thereby exempt from payment of Sales Tax under Chapter 151, Limited Use Sales, Excise and Use Tax, Texas Tax Code, and Article 1066 (C), Local Sales and Use Tax Act, Revised Civil Statutes of Texas.

6.9 Use of Premises:

6.9.1 CONTRACTOR shall confine construction equipment, the storage of materials and equipment and the operations of workers to the site and land and areas identified in and permitted by the Contract Documents and other land and areas permitted by laws and regulations, right-of-way, permits and easements, and shall not unreasonably encumber the premises with construction equipment or other materials or equipment. CONTRACTOR shall assume full responsibility for any damage to any such land or area, or to the owner or occupant thereof or of any adjacent land or areas, resulting from the performance of the Work. Should any claim be made by any such owner or occupant because of or in connection with the performance of the Work, CONTRACTOR shall promptly settle with such other party by negotiation or otherwise resolve the claim by arbitration or other dispute resolution proceeding or at law. CONTRACTOR shall indemnify, defend and hold harmless OWNER, E/A, E/A'S Consultants and anyone directly or indirectly employed by any of them from and against all claims, costs, losses and damages (including court costs and reasonable attorney's fees) arising out of or resulting from any claim or action, legal or equitable, brought by any such owner or occupant against OWNER, E/A or any other party indemnified hereunder to the extent caused by or based upon performance of the work or failure to perform the Work.

6.9.2 During the progress of the Work and on a daily basis, CONTRACTOR shall keep the premises free from accumulations of waste materials, rubbish and other debris resulting from the Work. At the completion of the Work, CONTRACTOR shall remove all waste materials, rubbish and debris from and about the premises as well as all tools, appliances, construction equipment and machinery and surplus materials. CONTRACTOR shall leave the site clean and ready for occupancy by OWNER at Substantial Completion of the Work. CONTRACTOR shall, at a minimum, restore to original condition all property not designated for alteration by the Contact Documents. If the CONTRACTOR fails to clean up at the completion of the Work, OWNER may do so and the cost thereof will be charged against the CONTRACTOR.

6.9.3 CONTRACTOR shall not load nor permit any part of any structure to be loaded in any manner that will endanger the structure, nor shall CONTRACTOR subject any part of the Work or adjacent property to stresses or pressures that will endanger it.

6.10 Record Documents: CONTRACTOR shall maintain in a safe place at the site, or other location acceptable to OWNER, one (1) record copy of all Drawings, Specifications, Addenda, Change Orders, Change Directives, Field Orders and written interpretations and clarifications (issued pursuant to paragraph 9.5) in good order and annotated to show all changes made during construction. These record documents together with all final samples and all final Shop Drawings will be available to OWNER and E/A for reference during performance of the Work. Upon Substantial Completion of the Work, these record documents, samples and Shop Drawings shall be promptly delivered to Owner's Representative.

6.11 Safety and Protection:

6.11.1 CONTRACTOR shall be responsible for initiating, maintaining and supervising all safety precautions and programs in connection with the Work. Upon request, and prior to installation of measures, CONTRACTOR shall submit a site security plan for approval by OWNER. By reviewing the plan or making recommendations or comments, OWNER will not assume liability nor will CONTRACTOR be relieved of liability for damage, injury or loss. CONTRACTOR shall take all necessary precautions for the safety of and shall provide the necessary protection to prevent damage, injury or loss to:

.1 all persons on the Work site or who may be affected by the Work;

.2 all the Work and materials and equipment to be incorporated therein, whether in storage on or off the site; and

.3 other property at the site or adjacent thereto, including, but not limited to, trees, shrubs, lawns, walks, pavements, roadways, structures, utilities and underground facilities not designated for removal, relocation or replacement in the course of construction.

6.11.2 CONTRACTOR shall comply with all applicable laws and regulations of any public body having jurisdiction for safety of persons or property or to protect them from damage, injury or loss; and shall erect and maintain all necessary safeguards for such safety and protection. CONTRACTOR shall notify owners of adjacent property and of underground facilities, and utility owners when prosecution of the Work may affect them, and shall cooperate with them in the protection, removal, relocation and replacement of their property. All damage, injury or loss to any property referred to in paragraph 6.11.1.2 and 6.11.1.3 caused, directly or indirectly, in whole or in part, by CONTRACTOR, Subcontractor, Supplier or any person or organization directly or indirectly employed by any of them to perform or furnish any of the Work or anyone for whose acts any of them may be liable, shall be remedied by CONTRACTOR (except damage or loss attributable to the fault of Drawings or Specifications or to the acts or omissions of OWNER, or E/A, or E/A's consultant or anyone employed by any of them or anyone for whose acts any of them may be liable, and not attributable, directly or indirectly, in whole or in part, to the faults or negligence of CONTRACTOR or any Subcontractor, Supplier or other person or organization directly or indirectly employed by any of them). CONTRACTOR's duties and responsibilities for safety and protection of the Work shall continue until such time as all the Work is completed and Owner's Representative has issued a notice to OWNER and CONTRACTOR in accordance with Article 14 that the Work is acceptable (except as otherwise expressly provided in connection with Substantial Completion). Without limitation, CONTRACTOR shall comply with the following specific provisions:

It shall be the duty and responsibility of CONTRACTOR and all of its subcontractors to be familiar with and comply with 29 USC Section 651, et seq., the Occupational Safety and Health Act of 1970, as amended ("OSHA") and to enforce and comply with all provisions of this Act.

The CONTRACTOR and all of its subcontractors shall comply with all applicable requirements of Subpart P of Part 1926 of 29 C.F.R, OSHA Safety and Health Standards, Texas Health and Safety Code Section 756.023, as amended, and shall submit a unit price for the particular excavation safety systems to be utilized by the Contractor for all excavations which exceed a depth of five feet (5').

Before commencing any excavation which will exceed a depth of five feet (5'), the CONTRACTOR shall provide the Owner with detailed plans and specifications regarding the safety systems to be utilized. Said plans and specifications shall

include a certification from a Texas licensed professional engineer indicating full compliance with the OSHA provisions cited above.

6.11.3 Safety Representative: CONTRACTOR shall designate in writing a qualified and experienced safety representative (the "Safety Representative") at the site whose duties and responsibilities shall include safety training; identifying and mitigating hazardous conditions and unsafe work practices; and developing, maintaining and supervising the implementation of safe work practices and safety programs as deemed necessary and appropriate for the Project. The term "Safety Representative" includes any designated Safety Supervisor, Superintendent or Safety Manager. The Safety Representative shall exercise due diligence in the execution of all Project related safety duties. The Safety Representative shall report directly to a company executive, not an on site project manager. Upon request of OWNER, CONTRACTOR shall provide certifications or other acceptable documentation of the Safety Representative's qualifications. The following requirements will be effective as of September 1, 2010:

.1 The Safety Representative shall present certification of completion of the OSHA 30-hour Construction Industry Training Outreach Program described at: http://www.osha.gov/dte/outreach/construction_generalindustry/construction.html

.2 The Safety Representative shall verify that all construction workers (defined as persons covered by a prevailing wage determination) on the job site, whether employed by the CONTRACTOR or subcontractors, have completed the OSHA 10-hour Construction Industry Training Outreach Program described at: http://www.osha.gov/dte/outreach/construction_generalindustry/construction.html. The Safety Representative must receive a certificate of training completion before allowing a worker on site and shall have all such certificates available for inspection by the OWNER.

.3 The Safety Representative shall ensure that workers, including designated competent persons, have completed all applicable OSHA specific or other training needed to perform their job assignments. Training topics applicable to the scope of the current Project may include, but are not limited to, scaffolds, fall protection, cranes, excavations, electrical safety, tools, concrete and masonry construction, steel erection, operation of motor vehicles and mechanized equipment.

.4 The Safety Representative shall post notice on the site of the Work stating that all workers shall have completed OSHA Construction Industry Training. The Owner may require, and the Safety Representative should consider providing a means of readily identifying workers who have completed the required training to monitor compliance with these requirements.

.5 The Safety Representative shall ensure that all required OSHA and Workers Compensation notices to workers are posted in English and Spanish at one or more conspicuous locations on the work site.

6.11.4 Hazard Communication Programs: CONTRACTOR shall be responsible for coordinating any exchange of material safety data sheets or other hazard communication information required to be made available to or exchanged between or among employers at the site in accordance with laws and regulations.

6.11.5 Emergencies:

.1 In emergencies affecting the safety or protection of persons or the Work at the site or adjacent thereto, CONTRACTOR, without special instruction or authorization from OWNER or E/A, is obligated to act reasonably to prevent threatened damage, injury or loss and to mitigate damage or loss to the Work.

CONTRACTOR shall give Owner's Representative telephone notification as soon as reasonably practical and a prompt written notice if CONTRACTOR believes that any significant changes in the Work or variations from the Contract Documents have been caused thereby. If Owner's Representative determines that a change in the Contract Documents is required because of the action taken by CONTRACTOR in response to such an emergency, a Change Directive or Change Order will be issued to document the consequences of such action; otherwise OWNER will not be responsible for CONTRACTOR's emergency action.

.2 Authorized agents of CONTRACTOR shall respond immediately to call-out at any time of any day or night when circumstances warrant the presence on Project site of CONTRACTOR or his agent to protect the Work or adjacent property from damage, restriction or limitation or to take such action or measures pertaining to the Work as may be necessary to provide for the safety of the public. Should CONTRACTOR and/or their agent fail to respond and take action to alleviate such an emergency situation, OWNER may direct other forces to take action as necessary to remedy the emergency condition, and OWNER will deduct any cost of such remedial action from the funds due CONTRACTOR under this Contract.

.3 In the event there is an accident involving injury to any individual or damage to any property on or near the Work, CONTRACTOR shall provide to Owner's Representative verbal notification within one (1) hour and written notification within twenty-four (24) hours of the event and shall be responsible for recording the location of the event and the circumstances surrounding the event through photographs, interviewing witnesses, obtaining medical reports, police accident reports and other documentation that describes the event. Copies of such documentation shall be provided to Owner's Representative, for OWNER's and E/A's records, within forty-eight (48) hours of the event. Contractor shall cooperate with OWNER on any OWNER investigation of any such incident.

6.11.6 Rest Breaks:

.1 Except as provided in subsection 6.11.6.2 below, an employee performing construction activity at a construction site is entitled to a rest break of not less than ten (10) minutes for every four (4) hours worked. No employee may be required to work more than 3.5 hours without a rest break. A rest break means a break from work within working hours, excluding meal breaks, during which an employee may not work. A rest break shall be scheduled as near as possible to the midpoint of the work period.

.2 An employee is not entitled to a rest break under subsection 6.11.6.1 on any day the employee works less than 3.5 hours or spends more than half of his or her work time engaged in non-strenuous labor in a climate controlled environment.

.3 A sign describing the requirements of this Section 6.11.6 in English and Spanish shall be posted by the employer in each establishment subject to the requirement of a rest break in a conspicuous place or places where notices to employees are customarily posted, in accordance with the OWNER's then current rules for size, content, and location of such signage.

.4 The violation of Ordinance No. 20100729-047, enacted July 29, 2010, which establishes the rest break requirements set forth above, may be enforced with criminal penalties and civil remedies, as set forth in the Ordinance.

6.11.7 If the Contractor fails to carry out the Work in accordance with the Contract Documents so that a safety violation has occurred, the Owner may order the Contractor to stop the Work or any portion thereof, until the cause for such order has been eliminated. However, the right of the Owner to stop the Work under this paragraph shall not give rise to a duty on the part of the Owner to supervise the Contractor's Work or to control the Contractor's means and methods or to exercise this right for the benefit of the Contractor or any other person or entity. All time lost due to Project shut down will be the Contractor's sole responsibility, will be charged against the Contract Time, and the Contractor will be responsible for any and all expenses incurred. This provision is in addition to and supplemental to the applicable provisions of the Project's ROCIP Safety Manual.

6.11.8 Confined Space Program

.1 Contractor acknowledges and agrees that the Owner is temporarily transferring management and control of the site of the Work to the Contractor for the purpose of constructing the Project. The Contractor's responsibilities to manage the Work includes the responsibility to manage the property for purposes of compliance with 29 CFR 1926 subpart AA. To the best of Owner's knowledge and belief, Owner has provided the following information in the plans and specifications and other Contract Documents: (i) the location of each known permit space, (ii) the hazards or potential hazards in each space or the reason it is a permit space; and (iii) any precautions that the Owner or any previous contractor has implemented for the protection of employees in the permit space. This transfer will result in the Contractor being both the host employer and the controlling contractor for this portion of the Work.

6.12 Continuing the Work: CONTRACTOR shall carry on the Work and adhere to the Progress Schedule during all disputes or disagreements with OWNER. No Work shall be delayed or postponed pending resolution of any disputes or disagreements, except as OWNER and CONTRACTOR may otherwise agree in writing.

6.13 CONTRACTOR's General Warranty and Guarantee:

6.13.1 CONTRACTOR warrants and guarantees to OWNER that all Work will conform to the plans and specifications, be performed in a good and workmanlike manner in accordance with the Contract Documents and will not be defective. This warranty will survive the termination or expiration of the Contract. CONTRACTOR's warranty and guarantee hereunder excludes defects or damage caused by:

.1 abuse, modification or improper maintenance or operation by persons other than CONTRACTOR, Subcontractors or Suppliers; or

.2 normal wear and tear under normal usage.

6.13.2 CONTRACTOR's obligation to perform and complete the Work in a good and workmanlike manner in accordance with the Contract Documents shall be absolute. None of the following will constitute an acceptance of Work that is not in accordance with the Contract Documents or a release of CONTRACTOR's obligation to perform the Work in accordance with the Contract Documents:

.1 observations by Owner's Representative and/or E/A;

.2 recommendation of any progress or final payment by Owner's Representative;

.3 the issuance of a certificate of Substantial Completion or any payment by OWNER to CONTRACTOR under the Contract Documents;

.4 use or occupancy of the Work or any part thereof by OWNER;

.5 any acceptance by OWNER or any failure to do so;

.6 any review of a Shop Drawing or sample submittal;

.7 any inspection, test or approval by others; or

.8 any correction of defective Work by OWNER.

6.14 INDEMNIFICATION:

6.14.1 CONTRACTOR shall defend, indemnify and hold harmless OWNER, E/A, E/A'S Consultants and Sub consultants and their respective officers, directors, partners, employees, agents and other Consultants and any of them (the "INDEMNIFIED PARTIES") from and against all claims, costs, losses and damages (including but not limited to all fees and charges of engineers, architects, attorneys and other professionals and all court or arbitration or other dispute resolution costs) arising out of or resulting from the performance of the Work, provided that any such claim, cost, loss or damage:

.1 Is attributable to bodily injury, sickness, disease or death, or to injury to or destruction of tangible property (other than the work itself), including the loss of use resulting therefrom, and

.2 Is caused in whole or in part by any negligent act or omission of CONTRACTOR, any Subcontractor, any Supplier, any person or organization directly or indirectly employed by any of them to perform or furnish any of the work or anyone for whose acts any of them may be liable, regardless of whether or not caused in part by any negligence or omission of the INDEMNIFIED PARTIES hereunder or whether liability is imposed upon such INDEMNIFIED PARTY by laws and regulations regardless of the negligence of any such person or entity.

In the event that indemnification of the INDEMNIFIED PARTIES is prohibited by law, CONTRACTOR shall nonetheless be solely responsible for any liability arising out of or resulting from the performance of the Work, subject to the limitations set forth above, and shall indemnify and hold harmless the remaining INDEMNIFIED PARTIES, who may be legally indemnified, from such liability of the CONTRACTOR and the associated costs described above.

6.14.2 The indemnification obligation under paragraph 6.14.1 shall not be limited in any way by any limitation on the amount or type of damages, or compensation or benefits payable by or for CONTRACTOR or any such Subcontractor, Supplier or other person or organization under workers' compensation acts, disability benefit acts or other employee benefit acts.

6.14.3 The obligations of CONTRACTOR under paragraph 6.14.1 shall not extend to the liability of OWNER, E/A, E/A's consultants, and their officers, directors, partners, employees or agents caused primarily by negligent preparation of maps, drawings, surveys, designs or specifications upon which is placed the applicable state-authorized design professional seal of OWNER's, E/A's or E/A's consultant's officers, directors, partners, employees or agents.

6.14.4 In the event CONTRACTOR fails to follow OWNER's directives concerning use of the site, scheduling or course of construction, or engages in other conduct which proximately causes damage to property based on inverse condemnation or otherwise, then and in that event, CONTRACTOR shall indemnify OWNER against all costs resulting from such claims.

6.14.5 In the event CONTRACTOR unreasonably delays progress of the work being done by others on the site so as to cause loss for

which OWNER becomes liable, then CONTRACTOR shall indemnify OWNER from and reimburse OWNER for such loss.

6.15 Survival of Obligations: All representations, indemnifications, warranties and guarantees made in, required by or given in accordance with the Contract Documents, as well as all continuing obligations indicated in the Contract Documents, will survive final payment, completion and acceptance of the Work and termination or completion of the Agreement.

6.16 Losses from Natural Causes: Unless otherwise specified, all loss or damage to CONTRACTOR arising out of the nature of the Work to be done or from action of the elements, floods or from unforeseeable circumstances in prosecution of the Work or from unusual obstructions or difficulties which may be encountered in prosecution of the Work, shall be sustained and borne by CONTRACTOR at its own cost and expense.

6.17 Notice of Claim: Should CONTRACTOR suffer injury or damage to person or property because of any error, omission or act of OWNER or of any of OWNER's employees or agents or others for whose acts OWNER is liable, a Claim must be made to the other party within thirty (30) calendar days of the event giving rise to such injury or damage. The provisions of this paragraph 6.17 shall not be construed as a substitute for or a waiver of the provisions of any applicable statute of limitations or statute of repose.

6.18 Liquidated Damages: CONTRACTOR or its Surety shall be liable for liquidated damages for the failure of the CONTRACTOR to timely complete the Work or any portion thereof within the Contract Time.

ARTICLE 7 - OTHER WORK

7.1 OWNER may perform other work related to the Project at the site by OWNER's own forces, or let other contracts therefor, or have other work performed by utility owners. CONTRACTOR and OWNER agree to and shall use best efforts to cooperate and coordinate the Work with others performing work and other work related to the Project in order to avoid conflicts and delays in the Work. If CONTRACTOR believes that delay or additional cost is involved because of such action by OWNER, CONTRACTOR may make a Claim as provided in Article 11 or 12.

7.2 CONTRACTOR shall afford other contractors who are in a contract with OWNER and each utility owner (and OWNER, if OWNER is performing the additional work with OWNER's employees) proper and safe access to the site and a reasonable opportunity for the introduction and storage of materials and equipment and the execution of such other work and shall properly connect and coordinate the Work with theirs. Unless otherwise provided in the Contract Documents, CONTRACTOR shall do all cutting, fitting and patching of the Work that may be required to make its several parts come together properly and integrate with such other work. CONTRACTOR shall not endanger any work of others by cutting, excavating or otherwise altering their work and will only cut or alter their work with the written consent of Owner's Representative and the other contractors whose work will be affected. CONTRACTOR shall promptly remedy damage wrongfully caused by CONTRACTOR to completed or partially completed construction or to property of the OWNER or separate contractors.

7.3 If the proper execution or results of any part of CONTRACTOR's Work depends upon work performed by others under this Article 7, CONTRACTOR shall inspect such other work and promptly report to Owner's Representative in writing any delays, defects or deficiencies in such other work that render it unavailable or unsuitable for the proper execution and results of CONTRACTOR's Work. CONTRACTOR's failure to report will constitute an acceptance of such other work as fit and proper for integration with CONTRACTOR's Work except for latent or non-apparent defects and deficiencies in such other work.

7.4 OWNER shall provide for coordination of the activities of the OWNER's own forces and of each separate contractor with the Work of CONTRACTOR, who shall cooperate with them. CONTRACTOR shall participate with other separate contractors and Owner's Representative in reviewing their construction Progress Schedules when directed to do so. On the basis of such review, CONTRACTOR shall make any revisions to the construction Progress Schedule deemed necessary after a joint review and mutual agreement. The agreed upon construction Progress Schedules shall then constitute the Progress Schedules to be used by CONTRACTOR, separate contractors and OWNER until subsequently revised.

7.5 Costs caused by delays or by improperly timed activities or defective construction shall be borne by the party responsible therefor.

ARTICLE 8 - OWNER'S RESPONSIBILITIES

8.1 Prior to the start of construction, OWNER will designate in writing a person or entity to act as Owner's Representative during construction. Except as otherwise provided in these General Conditions, OWNER shall issue all communications to CONTRACTOR through Owner's Representative.

8.2 OWNER will not supervise, direct, control or have authority over or be responsible for CONTRACTOR's means, methods, techniques, sequences or procedures of construction or the safety precautions and programs incident thereto. OWNER is not responsible for any failure of CONTRACTOR to comply with laws and regulations applicable to furnishing or performing the Work. OWNER is not responsible for CONTRACTOR's failure to perform or furnish the Work in accordance with the Contract Documents. Failure or omission of OWNER to discover, or object to or condemn any defective Work or material shall not release CONTRACTOR from the obligation to properly and fully perform the Contract.

8.3 OWNER is not responsible for the acts or omissions of CONTRACTOR, or of any Subcontractor, any Supplier, or of any other person or organization performing or furnishing any of the Work. CONTRACTOR acknowledges and agrees that OWNER'S direction to perform Work in accordance with the approved Progress Schedule is not a demand for acceleration or a dictation of CONTRACTOR'S means or methods.

8.4 Information or services under the OWNER's control shall be furnished by the OWNER with reasonable promptness to avoid delay in orderly progress of the Work. The OWNER shall have a reasonable amount of time to investigate site conditions, review submittals, analyze requests for changes, and to make other decisions in the orderly administration of the Contract. CONTRACTOR must notify the OWNER in writing, if the time for the investigation, review, analysis of any submittals, required for changes or otherwise required for OWNER'S decision, impacts in any way the Critical Path of the approved Progress Schedule.

8.5 The foregoing are in addition to other duties and responsibilities of the OWNER enumerated herein and especially those in respect to Article 4 (Availability of Lands; Subsurface and Physical Conditions; Reference Points), Article 7 (Other Work) and Article 14 (Payments to CONTRACTOR and Completion).

8.6 **Notice of Claim:** Should OWNER suffer injury or damage to person or property because of any error, omission or act of CONTRACTOR or of any of CONTRACTOR's employees or agents or others for whose acts CONTRACTOR is liable, a Claim will be made to the other party within thirty (30) calendar days of receipt of actual or constructive notice of the event giving rise to such injury or damage. The provisions of this paragraph 8.6 shall not be construed as a substitute for or a waiver of the provisions of any applicable statute of limitations or statute of repose.

ARTICLE 9 - ENGINEER/ARCHITECT'S STATUS DURING CONSTRUCTION

9.1 E/A's Authority and Responsibilities:

9.1.1 The duties and responsibilities and the limitations of authority of E/A during construction, as set forth in the Contract Documents, may be assigned or assumed by the OWNER, but shall not be extended without written consent of OWNER and/or E/A. The assignment of any authority, duties or responsibilities to E/A under the Contract Documents, or under any agreement between OWNER and E/A, or any undertaking, exercise or performance thereof by E/A, is intended to be for the sole and exclusive benefit of OWNER and not for the benefit of CONTRACTOR, Subcontractor, Supplier, or any other person or organization, or for any surety or employee or agent of any of them.

9.1.2 E/A will not supervise, direct, control or have authority over or be responsible for CONTRACTOR's means, methods, techniques, sequences or procedures of construction, or the safety precautions and programs incident thereto. E/A is not responsible for any failure of CONTRACTOR to comply with laws and regulations applicable to the furnishing or performing the Work. E/A is not responsible for CONTRACTOR's failure to perform or furnish the Work in accordance with the Contract Documents. Failure or omission of E/A to discover, or object to or condemn any defective Work or material shall not release CONTRACTOR from the obligation to properly and fully perform the Contract.

9.1.3 E/A is not responsible for the acts or omissions of CONTRACTOR, or of any Subcontractor, any Supplier, or of any other person or organization performing or furnishing any of the Work.

9.1.4 If OWNER and E/A agree, E/A will review the final Application for Payment and accompanying documentation and all maintenance and operating instructions, schedules, guarantees, bonds and certificates of inspection, tests and approvals and other documentation required to be delivered by Article 14, but only to determine generally that their content complies with the requirements of, and in the case of certificates of inspections, tests and approvals that the results certified indicate compliance with, the Contract Documents.

9.1.5 The limitations upon authority and responsibility set forth in this paragraph 9.1 shall also apply to E/A's Consultants, Resident Project Representative and assistants.

9.2 E/A as Owner's Representative: E/A may be designated as the Owner's Representative under paragraph 8.1.

9.3 Visits to Site: If OWNER and E/A agree, E/A will make visits to the site at intervals appropriate to the various stages of construction as E/A deems necessary in order to observe as an experienced and qualified design professional the progress that has been made and the quality of the various aspects of CONTRACTOR's executed Work. Based on information obtained during such visits and observations, E/A will endeavor for the benefit of OWNER to determine, in general, if the Work is proceeding in accordance with the Contract Documents. E/A will not be required to make exhaustive or continuous on-site inspections to check the quality or quantity of the Work. E/A's efforts will be directed toward providing for OWNER a greater degree of confidence that the completed Work will conform generally to the Contract Documents. On the basis of such visits and on-site observations, E/A will keep OWNER informed of the progress of the Work and will endeavor to guard OWNER against defective Work. E/A's visits and on-site observations are subject to all the limitations on E/A's authority and responsibility set forth in paragraph 9.1.

9.4 Resident Project Representative: If OWNER and E/A agree, E/A will furnish a Resident Project Representative to assist E/A in providing more continuous observation of the Work. The responsibilities and authority and limitations of any such Resident Project Representative and assistants will be as provided in paragraph 9.1 and in the Supplemental General Conditions. OWNER may designate another representative or agent to represent OWNER at the site who is not E/A, E/A's consultant, agent or employee.

9.5 Clarifications and Interpretations: E/A may determine that written clarifications or interpretations of the requirements of the Contract Documents (in the form of drawings or otherwise) are necessary. Such written clarifications or interpretations will be consistent with the intent of and reasonably inferable from the Contract Documents, will be issued with reasonable promptness by Owner's Representative and will be binding on OWNER and CONTRACTOR. If OWNER or CONTRACTOR believes that a written clarification or interpretation justifies an adjustment in the Contract Amount or the Contract Times, OWNER or CONTRACTOR may make a Claim therefor as provided in Article 11 or 12.

9.6 Rejecting Defective Work: E/A will recommend that OWNER disapprove or reject Work which E/A believes to be defective, or believes will not produce a completed Project that conforms to the Contract Documents or will prejudice the integrity of the design concept of the completed Project as a functioning whole as indicated by the Contract Documents.

9.7 Shop Drawings: Refer to Division 1 for E/A's authority concerning Shop Drawings.

ARTICLE 10 - CHANGES IN THE WORK

10.1 Changes:

10.1.1 Without invalidating the Contract and without notice to any surety, OWNER may, at any time or from time to time, order additions, deletions or revisions in the Work. Such changes in the Work will be authorized by Change Order, Change Directive or Field Order. In the event that the OWNER and the CONRACTOR are unable to negotiate the terms of a Change Order for the performance of additional Work, the OWNER may, at its election, perform such additional Work with its own forces or with another contractor and such work will be considered "Other Work" in accordance with Article 7.

10.1.2 Changes in the Work shall be performed under applicable provisions of the Contract Documents, and CONTRACTOR shall proceed promptly, unless otherwise provided in the Change Order, Change Directive or Field Order. CONTRACTOR's proposals for changes in the Contract Amount and/or Contract Time shall be submitted within ten (10) Calendar Days of request by Owner's Representative, including impacts to the approved Progress Schedule, unless Owner's Representative grants an extension. OWNER will review each proposal and respond to CONTRACTOR within ten (10) Calendar Days. After review by OWNER, CONTRACTOR shall provide any supporting data requested by Owner's Representative within seven (7) Calendar Days, unless Owner's Representative grants an extension. OWNER will determine within seven (7) Calendar Days whether to pursue the change in Work.

10.1.3 CONTRACTOR shall not be entitled to an increase in the Contract Amount or an extension of the Contract Times with respect to any Work performed that is not required by the Contract Documents as amended, modified and supplemented as provided in paragraphs 3.3.1 and 3.3.2, except in the case of an emergency as provided in paragraph 6.11.5 or in the case of uncovering Work as provided in paragraph 13.4.

10.1.4 Except in the case of an emergency as provided in paragraph 6.11.5, a Change Order or Change Directive is required before CONTRACTOR commences any activities associated with a change in the Work which, in CONTRACTOR 's opinion, will result in a change in the Contract Amount and/or Contract Times.

10.1.5 If notice of any change affecting the general scope of the Work or the provisions of the Contract Documents (including, but not limited to, Contract Amount or Contract Times) is required by the provisions of any Bond to be given to a surety, the giving of any such notice will be CONTRACTOR's responsibility, and the amount of each applicable Bond will be adjusted accordingly.

10.2 Change Orders:

10.2.1 OWNER and CONTRACTOR shall execute appropriate written Change Orders covering:

.1 a change in the Work;

.2 the amount of the adjustment in the Contract Amount, if any; and

.3 the extent of the adjustment in the Contract Time, if any.

10.2.2 An executed Change Order shall represent the complete, equitable, and final amount of adjustment in the Contract Amount and/or Contract Time owed to CONTRACTOR or OWNER as a result of the occurrence or event causing the change in the Work encompassed by the Change Order.

10.3 Change Directives:

10.3.1 Without invalidating the Contract, OWNER may, by written Change Directive, using the Force Account method, order changes in the Work within the general scope of the Contract consisting of additions, deletions or other revisions, the Contract Amount and Contract Time being adjusted as necessary. “Force Account” means a basis of payment for the direct performance of Work with payment based on the actual cost of the labor, equipment and materials furnished and consideration for overhead and profit as set forth in Section 11.5, below. A Change Directive shall be used in the absence of complete and prompt agreement on the terms of a Change Order. Where practicable, any items of Work that may be agreed upon, prior to the performance of Work under this Section, will be included in a separate Change Order. For example, the cost of the installation of additional asphalt may be agreed upon based on the unit prices in the Bid.

10.3.2 If the Change Directive provides for an adjustment to the Contract Amount, the adjustment shall be based on the method provided in paragraph 11.5.

10.3.3 A Change Directive shall be effective immediately and shall be recorded later by preparation and execution of an appropriate Change Order.

10.3.4 Upon receipt of a Change Directive, CONTRACTOR shall promptly proceed with the change in the Work involved, provided, prior to the commencement of any Work under this section, the CONTRACTOR must submit its proposed Work plan, anticipated schedule, and a list of its work force and equipment proposed to be used in the Work for OWNER’S approval. Upon such approval, CONTRACTOR must promptly commence and make continuous progress in the Work. The OWNER reserves the right to withhold payment for low production or lack of progress.

10.4 Field Order:

10.4.1 Owner's Representative may authorize minor variations in the Work from the requirements of the Contract Documents which do not involve an adjustment in the Contract Amount or the Contract Times and are compatible with the design concept of the completed Project as a functioning whole as indicated by the

Contract Documents. These shall be accomplished by written Field Order and shall be binding on OWNER and on CONTRACTOR who shall perform the Work involved promptly.

10.4.2 If CONTRACTOR believes that a Field Order would require an adjustment in the Contract Amount and/or Contract Times, CONTRACTOR shall make a prompt written request to Owner's Representative for a Change Order. Any request by CONTRACTOR for an adjustment in Contract Amount and/or Contract Times must be made in writing prior to beginning the work covered by the Field Order.

10.5 **No Damages for Delay:** CONTRACTOR shall receive no compensation for delays or hindrances to the Work, except when direct and unavoidable extra cost to CONTRACTOR is caused by failure of OWNER to provide information or material, if any, which is to be furnished by OWNER or access to the Work and only to the extent that such acts continue after the CONTRACTOR furnishes OWNER with written notice of such failure. When such extra compensation is claimed a written statement thereof shall be presented by CONTRACTOR to OWNER and if by OWNER found correct shall be approved. If delay is caused by specific orders given by OWNER to stop work or by performance of extra Work or by failure of OWNER to provide material or necessary instructions for carrying on the Work, then such delay will entitle CONTRACTOR to an equivalent extension of time, CONTRACTOR's application for which shall, however, be subject to approval of OWNER. No such extension of time shall release CONTRACTOR or surety on its performance bond from all CONTRACTOR's obligations hereunder which shall remain in full force until discharge of the Contract. In no event shall the CONTRACTOR be entitled to any compensation or recovery of any special damages in connection with any delays, including without limitation: consequential damages, lost opportunity costs, impact damages, or other similar damages. The OWNER'S exercise of any of its rights or remedies under the Contract Documents (including without limitation ordering changes in the Work, or directing suspension, rescheduling, or correction of the Work), regardless of the extent or frequency of the OWNER'S exercise of such rights or remedies, shall not be construed as active interference in the CONTRACTOR'S performance of the Work. Except as otherwise provided herein, an extension of Contract Time, to the extent permitted under Article 12, shall be the sole remedy of the CONTRACTOR for any acknowledged delays.

ARTICLE 11 - CHANGE OF CONTRACT AMOUNT

11.1 The Contract Amount is stated in the Agreement and, including authorized adjustments, is the total amount payable by OWNER to CONTRACTOR for performance of the Work under the Contract Documents.

11.2 The original Contract Amount may not be increased by more than twenty-five percent (25%) and it may not be decreased more than twenty-five percent (25%) without the consent of the CONTRACTOR to such decrease, except in the event of a termination for convenience under paragraph 15.2 or the failure of the City Council to appropriate sufficient funding for the Project, in which events it is agreed that the consent of the CONTRACTOR will not be required.

11.3 The Contract Amount shall only be changed by a Change Order. Any claim for an adjustment in the Contract Amount shall be made by Written Notice delivered by the party making the Claim to the other party promptly (but in no event later than thirty (30) calendar days) after the start of the occurrence or event giving rise to the Claim and stating the general nature of the Claim. Notice of the amount of the Claim with supporting data shall be delivered within thirty (30) calendar days after Written Notice of Claim is delivered by claimant, and shall represent that the adjustment claimed covers all known amounts to which claimant is entitled as a result of said occurrence or event. If OWNER and

CONTRACTOR cannot otherwise agree, all Claims for adjustment in the Contract Amount shall be determined as set out in Article 16.

11.4 Determination of Value of Work:

11.4.1 The value of any Work covered by a Change Order for an adjustment in the Contract Amount will be determined by one or more of the following methods:

.1 by application of unit prices contained in the Contract Documents to the quantities of the items involved.

.2 by a mutually agreed lump sum properly itemized and supported by sufficient substantiating data, including documentation by subcontractors performing the work, to permit evaluation.

.3 by cost of Work plus CONTRACTOR's fee for all overhead costs and profit (determined as provided in paragraph 11.5).

.4 No cost will be included in the change order for time spent preparing the change order, nor will costs be included for an estimate of time to negotiate the change order costs for machinery, tools, or equipment as described in subparagraph 11.5.3

11.4.2 Before using the method described in paragraph 11.4.1.3, OWNER and CONTRACTOR agree to negotiate a Change Order using the methods identified in paragraphs 11.4.1.1 and 11.4.1.2, as appropriate, to determine the adjustment in the Contract Amount.

11.5 Cost of Work: If neither of the methods defined in paragraphs 11.4.1.1 nor 11.4.1.2 can be agreed upon before a change in the Work is commenced which will result in an adjustment in the Contract Amount, then the change in the Work will be performed by Change Directive, using the Force Account method, and payment will be made as follows:

11.5.1 For all personnel, CONTRACTOR will receive actual field cost wage rates for each hour that said personnel are actually engaged in such Work, as substantiated by its certified payroll, to which will be added an amount equal to twenty-five percent (25%) of the sum thereof as compensation for CONTRACTOR's and any effected Subcontractor's total overhead and profit. No separate charge will be made by CONTRACTOR or its Subcontractor(s) for organization or overhead expenses. In no case will the rate of wage be less than the minimum shown in the Contract for a particular category. CONTRACTOR will also receive an amount equal to 55% of the wages paid personnel, excluding the 25% compensation provided above, for CONTRACTOR’s and any effected Subcontractor’s cost of premiums on public liability insurance, workers' compensation insurance, social security and unemployment insurance. The actual cost of CONTRACTOR's bond(s) on the extra Work will be paid based on invoices from surety. No charge for superintendence will be made unless considered necessary and ordered by OWNER.

11.5.2 CONTRACTOR will receive the actual cost, including freight charges, of the materials used and installed on such Work, to which costs will be added a sum equal to twenty-five percent (25%) thereof as compensation for CONTRACTOR's and any effected Subcontractor's total overhead and profit. In case material invoices indicate a discount may be taken, the actual cost will be the invoice price minus the discount.

11.5.3 For machinery, trucks, power tools, or other similar equipment (the “equipment”) agreed to be necessary by OWNER and CONTRACTOR, OWNER will allow CONTRACTOR the Regional and Model Year adjusted Monthly Ownership Cost divided by 176 plus the Hourly Estimated Operating Costs as given in the latest edition of the "Rental Rate Blue Book" as published by EquipmentWatch (1-800-

669-3282) for each hour that said equipment is in use on such work. The established equipment rates will be paid for each hour that the equipment is utilized in the Work. In the event that the equipment is used intermittently during the Work, full payment for an eight-hour day will be made if the equipment is not idle more than four (4) hours of the day. If the equipment is idle more than four (4) hours in a day, then payment will be made only for the actual hours worked. No additional compensation will be allowed on the equipment for CONTRACTOR's or any affected Subcontractor's overhead and profit. OWNER may accept an actual rental invoice in lieu of the method of calculation set forth in paragraph 11.5.3 for equipment rented exclusively for Force Account Work or for equipment not included in the Rental Rate Blue Book.

11.5.4 The compensation, as herein provided for, shall be received by CONTRACTOR and any affected Subcontractor as payment in full for work done by Change Directive and will include use of small tools, and total overhead expense and profit. CONTRACTOR and Owner's Representative shall compare records of work done by Change Directive at the end of each day. Copies of these records will be made upon forms provided for this purpose by OWNER and signed by both Owner's Representative and CONTRACTOR, with one copy being retained by OWNER and one by CONTRACTOR. Refusal by CONTRACTOR to sign these records within two (2) working days of presentation does not invalidate the accuracy of the record.

11.6 Unit Price Work:

11.6.1 Where the Contract Documents provide that all or part of the Work is to be unit price Work, initially the Contract Amount will be deemed to include for all unit price work an amount equal to the sum of the established unit price for each separately identified item of unit price work times the estimated quantity of each item as indicated in the Bid. The estimated quantities of items of unit price work are not guaranteed and are solely for the purpose of comparison of Bids and determining an initial Contract Amount. Determinations of the actual quantities and classifications of unit price work performed by CONTRACTOR will be made by Owner's Representative. Owner's Representative will review with CONTRACTOR the preliminary determinations on such matters before rendering a written decision thereon (by recommendation of an Application for Payment or otherwise).

11.6.2 When "plan quantity" is indicated for a Bid item, CONTRACTOR shall be paid amount specified in the Contract Documents without any measurements.

11.6.3 Each unit price will be deemed to include an amount considered by CONTRACTOR to be adequate to cover CONTRACTOR's overhead and profit for each separately identified item.

11.6.4 A Major Item is any individual Bid item in the Bid that has a total cost equal to or greater than five percent (5%) of the original Contract Amount or $50,000, whichever is greater, computed on the basis of Bid quantities and Contract unit prices.

11.6.5 OWNER or CONTRACTOR may make a Claim for an adjustment in the Contract Amount in accordance with Article 11 if:

.1 the actual quantity of any Major Item should become as much as twenty percent (20%) more than or twenty percent (20%) less than that in the Bid; or

.2 CONTRACTOR presents documentation contesting accuracy of "plan quantity" and Owner's Representative verifies quantity and determines original value is in error by five percent (5%) or more;

Provided, however, in the event a Major Item is reduced by twenty percent (20%) or more of the amount in the Bid, no additional Article 11 profit or overhead will be added, if, due to other additions in the Work, the net value of the Contract Amount is not reduced.

ARTICLE 12 - CHANGE OF CONTRACT TIMES

12.1 Working Day and Calendar Day Contracts:

12.1.1 The Contract Times (or Milestones) may only be changed by Change Order or Time Extension Request duly executed by both CONTRACTOR and Owner's Representative. Any claim for an adjustment of the Contract Times (or Milestones) shall be made by Written Notice delivered by the party making the Claim to the other party promptly (but in no event later than thirty (30) calendar days after the start of the occurrence or event giving rise to the delay) and stating the general nature of the delay. Notice of the extent of the delay with supporting data shall be delivered within thirty (30) calendar days after Written Notice of Claim is delivered by claimant, and shall represent that the adjustment claimed is the entire adjustment to which claimant is entitled as a result of said occurrence or event. If OWNER and CONTRACTOR cannot otherwise agree, all Claims for adjustment in the Contract Times (or Milestones) shall be determined as set out in Article 16. No Claim for an adjustment in the Contract Times (or Milestones) will be valid if not submitted in accordance with the requirements of this paragraph.

12.1.2 When CONTRACTOR is at fault and OWNER stops the Work, so that corrections in the Work can be made by CONTRACTOR, no extension in time will be allowed.

12.1.3 When CONTRACTOR is prevented from completing any part of the Work within the Contract Times (or Milestones) due to delay beyond the control of both OWNER and CONTRACTOR, an extension of the Contract Times (or Milestones) in an amount equal to the time lost due to such delay shall be CONTRACTOR's sole and exclusive remedy for such delay. If performance by the CONTRACTOR or OWNER is interrupted by any occurrence not occasioned by its own conduct, whether such occurrence be an act of god or the result of war, riot, civil commotion, sovereign conduct, or the conduct of a third party, then such performance will be excused for a period of time necessary to remedy its effects, provided, however, in such an event, a conference will be held within three (3) business days to establish a proposed new Progress Schedule for the Project.

12.1.4 OWNER will consider time extension requests and may grant CONTRACTOR an extension of time because of:

.1 Changes ordered in the work which justify additional time.

.2 Failure of materials or products being at the Project site due to delays in transportation or failures of Suppliers, which are not the result of CONTRACTOR's, Subcontractor's or Supplier's negligence. The request for an extension of time shall be supported by a citation of acts demonstrating that the delays are beyond CONTRACTOR's control, including, but not limited to, CONTRACTOR's efforts to overcome such delays documented as follows:

a) Copy of purchase order for delayed item(s) indicating date ordered by CONTRACTOR/ Subcontractor and date purchase order received by Supplier.

b) If item(s) require Shop Drawings or other submittal information in accordance with the Contract Documents, provide record of date

submittal(s) forwarded to Owner's Representative, date submittal(s) returned to CONTRACTOR, and date submittal(s) forwarded to Supplier.

c) Copy of document(s) from Supplier, on Supplier's letterhead, indicating date(s) item(s) would be ready for shipment and/or actual shipment date(s).

d) Copies of all correspondence between CONTRACTOR / Subcontractor and Supplier indicating CONTRACTOR / Subcontractor's efforts to expedite item(s).

e) If item(s) are being purchased by a Subcontractor, provide correspondence, meeting notes, etc., that reflect CONTRACTOR's efforts with the Subcontractor to expedite delivery of the item(s).

.3 When acts of OWNER, E/A, utility owners or other contractors employed by OWNER delay progress of work through no fault of CONTRACTOR. The CONTRACTOR will only be entitled to an extension of time for delays that affect the Critical Path of the Work and that are not caused by the CONTRACTOR.

.4 When CONTRACTOR is delayed by strikes, lockouts, fires, losses from natural causes, or other unavoidable cause or causes beyond CONTRACTOR's control.

12.2 Calendar Day Contracts:

12.2.1 Under a Calendar Day Contract, CONTRACTOR may be granted an extension of time because of unusual inclement weather, including but not limited to unusual rainfall events, which are beyond the normal rainfall recorded and expected for Austin, Texas. However, the CONTRACTOR will not be granted an extension of time for “normal rainfall”, as described below.

12.2.2 "Unusual Inclement Weather" is defined as a rain event or other weather related event which occurs at the site and is of sufficient magnitude to prevent CONTRACTOR from performing units of Work critical to maintaining the Progress Schedule.

12.2.3 Baseline Rain Day Determination. “Normal rainfall” compiled by the State climatologist, based on U.S. Weather Bureau Records for Austin, Texas, is considered a part of the Calendar Day Contract, and is not a justification for an extension of time. Listed below are the number of days in each month for which no compensatory days for rainfall events (“Rain Days”) in such months may be claimed:

January..... 8 days

February..... 8 days

March..... 7 days

April..... 7 days

May..... 9 days

June..... 6 days

July..... 5 days

August..... 5 days

September..... 7 days

October..... 7 days

November..... 7 days

December..... 7 days

Rain Days in addition to the baseline Rain Day determination described above will be measured with the Owner's Representative's approval at the nearest operational public weather data collection facility to the site, including but not limited to the OWNER's early warning flood gauge system.

12.2.4 CONTRACTOR may receive credit in any month for Unusual Inclement Weather, and specifically for any Rain Days in that month which exceed the number of Rain Days allocated to that month, if a Claim is made in accordance with paragraph 12.1.1 and the weather event meets the definition for "Unusual Inclement Weather", and as applicable, "Rain Day" and such claimed day is a day on which Work critical to maintaining the Progress Schedule is scheduled to be performed and is otherwise capable of being performed.

ARTICLE 13 - TESTS AND INSPECTIONS; CORRECTION, REMOVAL OR ACCEPTANCE OF DEFECTIVE WORK

13.1 Notice of Defects: Prompt notice of all defective Work of which OWNER or E/A has actual knowledge will be given to CONTRACTOR. All defective Work may be rejected, corrected or accepted as provided in Article 13. CONTRACTOR must give OWNER and E/A prompt notice of any defective Work of which CONTRACTOR has actual knowledge.

13.2 Access to Work: OWNER, E/A, E/A's Consultants, other representatives and personnel of OWNER, independent testing laboratories and governmental agencies having jurisdiction will have access to the Work at reasonable times for observing, inspecting and testing. CONTRACTOR shall provide them proper and safe conditions for such access, and advise them of CONTRACTOR's site safety procedures and programs so that they may comply therewith as applicable.

13.3 Tests and Inspections:

13.3.1 CONTRACTOR shall give timely notice of readiness of the Work for all required inspections, tests or approvals, and shall cooperate with inspection and testing personnel to facilitate required inspections or tests.

13.3.2 OWNER shall employ and pay for services of an independent testing laboratory to perform all inspections, tests or approvals required by the Contract Documents except:

.1 for inspections, tests or approvals covered by paragraphs 13.3.3 and 13.3.4 below;

.2 that costs incurred for tests or inspections conducted pursuant to paragraph 13.4.3 shall be paid as provided in paragraph 13.4.3;

.3 for reinspecting or retesting defective Work, including any associated costs incurred by the testing laboratory for cancelled tests or standby time; and

.4 as otherwise specifically provided in the Contract Documents.

13.3.3 If laws or regulations of any public body having jurisdiction require any Work (or part thereof) specifically to be inspected, tested or approved by an employee or other representative of such public body, CONTRACTOR shall assume full responsibility for arranging and obtaining such inspections, tests or approvals, pay

all costs in connection therewith and furnish Owner's Representative the required certificates of inspection or approval.

13.3.4 CONTRACTOR shall also be responsible for arranging and obtaining and shall pay all costs in connection with any inspections, tests or approvals required for OWNER's and E/A's review of submittals covering materials, equipment, and mix designs to be incorporated in the Work.

13.3.5 All testing laboratories shall meet the requirements of ASTM E-329.

13.4 Uncovering Work:

13.4.1 If any Work (or the work of others) that is to be inspected, tested or approved is covered by CONTRACTOR without written concurrence of Owner's Representative, or if any Work is covered contrary to the written request of Owner's Representative, it must, if requested by Owner's Representative, be uncovered and recovered at CONTRACTOR's expense.

13.4.2 Uncovering Work as provided in paragraph 13.4.1 shall be at CONTRACTOR's expense unless CONTRACTOR has given Owner's Representative timely notice of CONTRACTOR's intention to cover the same and Owner's Representative has not acted within five (5) working days to such notice.

13.4.3 If Owner's Representative considers it necessary or advisable that covered Work be observed, inspected or tested, CONTRACTOR shall uncover, expose or otherwise make available for observation, inspection or testing that portion of the Work in question, furnishing all necessary labor, material and equipment. If it is found that such Work is defective, CONTRACTOR shall pay all claims, costs, losses and damages caused by, arising out of or resulting from such uncovering, exposure, observation, inspection and testing and of satisfactory replacement or reconstruction (including but not limited to all costs of repair or replacement of work of others); and OWNER shall be entitled to an appropriate decrease in the Contract Amount, and may make a Claim therefor as provided in Article 11. If, however, such Work is not found to be defective, CONTRACTOR shall be allowed an increase in the Contract Amount or an extension of the Contract Times (or Milestones), or both, directly attributable to such uncovering, exposure, observation, inspection, testing, replacement and reconstruction; and CONTRACTOR may make a Claim therefor as provided in Articles 11 and 12.

13.5 OWNER May Stop the Work:

13.5.1 If the Work is defective, or CONTRACTOR fails to supply sufficient skilled workers, suitable materials, and/or equipment; or fails to furnish or perform the Work in such a way that the Work in progress or the completed Work will conform to the Contract Documents, OWNER may order CONTRACTOR to stop the Work, or any portion thereof, until the cause for such order has been eliminated; however, this right of OWNER to stop the Work shall not give rise to any duty on the part of OWNER to exercise this right for the benefit of CONTRACTOR or any surety or other party.

13.5.2 If CONTRACTOR fails to correct defective Work or submit a satisfactory plan to take corrective action, with procedure and time schedule, OWNER may order CONTRACTOR to stop the Work, or any portion thereof, until cause for such order has been eliminated, or take any other action permitted by this Contract. A notice to stop the Work, based on defects, shall not stop calendar or working days charged to the Project.

13.6 Correction or Removal of Defective Work: If required by OWNER, CONTRACTOR shall promptly, as directed, either correct all defective Work, whether or not fabricated, installed or completed, or, if the Work has been rejected by Owner's Representative, remove it from the site and replace it with Work that is not defective. CONTRACTOR shall correct or remove and replace defective Work, or submit a plan of action detailing how the deficiency will be corrected, within the time frame identified in the notice of defective Work. CONTRACTOR shall pay all claims, costs, losses and damages caused by or resulting from such correction or removal (including but not limited to all costs of repair or replacement of work of others).

13.7 Warranty period:

13.7.1 If within one year after the date of Substantial Completion or such longer period of time as may be prescribed by laws or regulations or by the terms of any applicable special guarantee required by the Contract Documents or by any specific provision of the Contract Documents (e.g. paragraph 14.11.2), any Work, including work performed after the Substantial Completion date, is found to be defective, CONTRACTOR shall promptly, without cost to OWNER and in accordance with OWNER's written instructions:

(i) correct such defective Work, or, if it has been rejected by OWNER, remove it from the site and replace it with Work that is not defective, and

(ii) satisfactorily correct or remove and replace any damage to other Work or the work of others resulting therefrom.

If CONTRACTOR does not promptly comply with the terms of such instructions, or in an emergency where delay would cause serious risk of loss or damage, OWNER may have the defective Work corrected or the rejected Work removed and replaced, and all claims, costs, losses and damages caused by or resulting from such removal and replacement (including but not limited to all costs of repair or replacement of work of others) will be paid by CONTRACTOR. The warranty period will be deemed to be renewed and recommenced in connection with the completed items of Work requiring correction.

13.7.2 In special circumstances where a particular item of equipment is placed in continuous service before Substantial Completion of all the Work, the warranty period for that item may start to run from an earlier date if so provided in the Contract Documents.

13.7.3 If correction of defective Work will affect the function or use of the facility CONTRACTOR shall not proceed with correction of defective Work without prior coordination and approval of OWNER.

13.7.4 The obligations of the CONTRACTOR to perform warranty work will survive the acceptance of the Work and any termination of the Contract.

13.8 Acceptance of Defective Work: If, instead of requiring correction or removal and replacement of defective Work, OWNER decides to accept it, OWNER may do so. CONTRACTOR shall pay all claims, costs, losses and damages attributable to OWNER's evaluation of and determination to accept such defective Work. If any such acceptance occurs prior to recommendation of final payment, a Change Order will be issued incorporating the necessary revisions in the Contract Documents and compensating OWNER for the diminished value of the defective Work. If the acceptance occurs after such recommendation, an appropriate amount will be paid by CONTRACTOR to OWNER after a calculation by OWNER of the diminution in value of the defective Work.

13.9 OWNER May Correct Defective Work: If CONTRACTOR fails within a reasonable time after Written Notice of OWNER to correct defective Work, or to remove and replace rejected Work, or if CONTRACTOR fails to perform the Work in accordance with the Contract Documents, or if CONTRACTOR fails to comply with any other provision of the Contract

Documents, OWNER may, after seven (7) calendar days' Written Notice to CONTRACTOR, correct and remedy any such deficiency. If, in the opinion of the Owner's Representative, significant progress has not been made during this seven (7) calendar day period to correct the deficiency, the OWNER may exercise any actions necessary to remedy the deficiency. In exercising the rights and remedies under this paragraph, OWNER shall proceed expeditiously. In connection with such corrective and remedial action, OWNER may exclude CONTRACTOR from all or part of the site, take possession of all or part of the Work, and suspend CONTRACTOR's services related thereto, and incorporate in the Work all materials and equipment stored at the site or for which OWNER has paid CONTRACTOR but which are stored elsewhere. CONTRACTOR shall allow OWNER, its agents and employees, OWNER's other contractors, E/A and E/A's consultants access to the site to enable OWNER to exercise the rights and remedies under this paragraph. All claims, costs, losses and damages incurred or sustained by OWNER in exercising such rights and remedies will be charged against CONTRACTOR and a Change Order will be issued incorporating the necessary revisions in the Contract Documents with respect to the Work. Such claims, costs, losses and damages will include but not be limited to all costs of repair or replacement of work of others destroyed or damaged by correction, removal or replacement of CONTRACTOR's defective Work. CONTRACTOR shall not be allowed an extension of the Contract Times (or Milestones), or claims of damage because of any delay in the performance of the Work attributable to the exercise by OWNER of OWNER's rights and remedies hereunder.

ARTICLE 14 - PAYMENTS TO CONTRACTOR AND COMPLETION

14.1 Application for Progress Payment:

14.1.1 No more often than once a month, CONTRACTOR shall submit to Owner's Representative for review an Application for Payment, in a form acceptable to OWNER, filled out and signed by CONTRACTOR covering the Work completed as of the date of the Application and accompanied by such supporting documentation as is required by the Contract Documents.

14.1.2 Such applications shall not include requests for payment on account of changes in the Work which have been properly authorized by Change Directives but not yet included in Change Orders.

14.1.3 Such applications shall not include requests for payment of amounts the CONTRACTOR does not intend to pay to a Subcontractor or Supplier because of a dispute or other reason.

14.1.4 If payment is requested on the basis of materials or equipment not incorporated in the Work but delivered and suitably stored at the site or at another location agreed to in writing, the Application for Payment shall be accompanied by such bills of sale, data and other procedures satisfactory to OWNER substantiating OWNER's title to such materials or equipment or otherwise protecting OWNER's interest. Payment on account of such materials or equipment will not include any amount for CONTRACTOR's overhead or profit or relieve CONTRACTOR of its obligation to protect and install such materials or equipment in accordance with the requirements of the Contract and to restore damaged or defective Work. If materials or equipment are stored at another location, at the direction of the OWNER they shall be stored in a bonded and insured facility, accessible to E/A and OWNER, and shall be clearly marked as property of OWNER. Title to materials delivered to the site of the Work or a staging area will pass to OWNER upon payment by OWNER without the necessity for further documentation. Risk of loss will not pass to OWNER until acceptance.

14.1.5 Where the original Contract Amount is less than $400,000, OWNER will pay CONTRACTOR total amount of approved Application for Payment, less ten percent (10%) of amount thereof, which ten percent (10%) will be retained until final payment, less all previous payments and less all other sums that may be retained by OWNER under the terms of this Agreement. Where the original Contract Amount is $400,000 or more, OWNER will pay CONTRACTOR total amount of approved Application for Payment, less five percent (5%) of amount thereof, which five percent (5%) will be retained until final payment, less all previous payments and less all other sums that may be retained by OWNER under the terms of this Agreement. In either case, if the Work is near completion and delay occurs due to no fault or neglect of CONTRACTOR, OWNER may pay a portion of the retained amount to CONTRACTOR. CONTRACTOR, at OWNER's option, may be relieved of the obligation to complete the Work and, thereupon, CONTRACTOR shall receive payment of the balance due under the Contract subject to the conditions stated under paragraph 15.2. A Subcontractor may submit a written request to the CONTRACTOR and Project Manager requesting release of retainage for work by the Subcontractor that has been completed and approved. The Project Manager will evaluate the request and if it is approved, the Project Manager will request the CONTRACTOR to include the request for release of an appropriate amount of retainage in the next Pay Application.

14.1.6 Applications for Payment shall include the following documentation:

.1 updated Progress Schedule;

.2 monthly subcontractor report;

.3 any other documentation required under the Supplemental General Conditions.

14.2 CONTRACTOR's Warranty of Title: CONTRACTOR warrants and guarantees that title to all Work, materials and equipment covered by any Application for Payment, whether incorporated in the Project or not, will pass to OWNER free and clear of all Liens no later than the time of payment to CONTRACTOR.

14.3 Review of Applications for Progress Payment:

14.3.1 Owner's Representative will, within seven (7) calendar days after receipt of each Application for Payment, either indicate a recommendation for payment and forward the Application for processing by OWNER, or return the Application to CONTRACTOR indicating Owner's Representative's reasons for refusing to recommend payment. In the latter case, CONTRACTOR shall make the necessary corrections and resubmit the Application.

14.3.2 Owner's Representative's recommendation of any payment requested in an Application for Payment will constitute a representation by Owner's Representative, based upon Owner's Representative's on-site observations of the executed Work and on Owner's Representative's review of the Application for Payment and the accompanying data and schedules, that to the best of Owner's Representative's knowledge, information and belief:

.1 the Work has progressed to the point indicated; and

.2 the quality of the Work is generally in accordance with the Contract Documents (subject to an evaluation of the Work as a functioning whole prior to or upon Substantial Completion, to the results of any subsequent tests called for in the Contract Documents, to a final determination of quantities and classifications for unit price Work, and to any other qualifications stated in the recommendation).

14.3.3 By recommending any such payment, Owner's Representative will not thereby be deemed to have represented that:

.1 exhaustive or continuous on-site inspections have been made to check the quality or the quantity of the Work;

.2 examination has been made to ascertain how or for what purpose CONTRACTOR has used money previously paid on account of the Contract Amount;

.3 CONTRACTOR's construction means, methods, techniques, sequences or procedures have been reviewed; or

.4 that there may not be other matters or issues between the parties that might entitle CONTRACTOR to be paid additionally by OWNER or entitle OWNER to withhold payment to CONTRACTOR.

14.4 Decisions to Withhold Payment:

14.4.1 OWNER may withhold or nullify the whole or part of any payment to such extent as may be necessary on account of:

.1 defective Work not remedied;

.2 third party Claims filed or reasonable evidence indicating probable filing of such Claims;

.3 failure of CONTRACTOR to make payments properly to Subcontractors for labor, materials or equipment;

.4 reasonable evidence that the Work cannot be completed for the unpaid balance of the Contract Amount;

.5 damage to OWNER or another contractor;

.6 reasonable evidence that the Work will not be completed within the Contract Time, and that the unpaid balance would not be adequate to cover actual or liquidated damages for the anticipated delay;

.7 failure of CONTRACTOR to submit a schedule of values in accordance with the Contract Documents;

.8 failure of CONTRACTOR to submit a submittal schedule in accordance with the Contract Documents;

.9 failure of CONTRACTOR to submit and update a construction Progress Schedule in accordance with the Contract Documents;

.10 failure of CONTRACTOR to maintain a record of changes on drawings and documents;

.11 failure of CONTRACTOR to maintain weekly payroll reports and, as applicable, provide copies of reports in a timely manner upon request of OWNER;

.12 failure of CONTRACTOR to submit monthly subcontractor reports;

.13 CONTRACTOR's neglect or unsatisfactory prosecution of the Work, including failure to clean up;

.14 failure of CONTRACTOR to comply with the Austin City Code, Chapter 2-9-A, as amended, “Minority-Owned and Women-Owned Business Enterprise Procurement Program;” or

.15 failure of CONTRACTOR to comply with any provision of the Contract Documents.

14.4.2 When the above reasons for withholding payment are removed, CONTRACTOR shall resubmit a statement for the value of Work performed. Payment will be made within thirty (30) calendar days of receipt of approved Application for Payment.

14.4.3 Subcontractors may request Partial Payment when the OWNER withholds payment of an invoice to the CONTRACTOR for any reason listed in Section 14.4.1. If payment is withheld by the OWNER, the CONTRACTOR shall notify all affected Subcontractors within two (2) working days of notice that payment is being withheld. Upon notification, Subcontractors may submit a formal written request for Partial Payment to the CONTRACTOR and OWNER. If directed by the OWNER, the CONTRACTOR shall within three (3) working days resubmit to the OWNER an invoice for the same period that includes only the work performed by the requesting Subcontractors during this period. The OWNER will review this resubmitted invoice in accordance with Section 14.3.1. Upon receipt of payment for the resubmitted invoice, CONTRACTOR shall pay the subcontractor within ten (10) Calendar Days in accordance with Section 6.4.7.

14.5 Delayed Payments: Should OWNER fail to make payment to CONTRACTOR of sum named in any Application for Payment within thirty (30) calendar days after the day on which OWNER received the mutually acceptable Application for Payment, then OWNER will pay to CONTRACTOR, in addition to sum shown as due by such Application for Payment, interest thereon at the rate specified in Government Code, Section 2251.025(b) from date due until fully paid, which shall fully liquidate any injury to CONTRACTOR growing out of such delay in payment.

14.6 Arrears: No money shall be paid by OWNER upon any claim, debt, demand or account whatsoever, to any person, firm or corporation who is in arrears to City for taxes; and City shall be entitled to counterclaim and automatically offset against any such debt, claim, demand or account in the amount of taxes so in arrears and no assignment or transfer of such debt, claim, demand or account after said taxes are due, shall affect the right of OWNER to so offset said taxes, and associated penalties and interest if applicable, against the same.

14.7 Substantial Completion:

14.7.1 When the CONTRACTOR considers that the Work, or a portion thereof which the OWNER agrees to accept separately, is substantially complete, the CONTRACTOR shall notify Owner's Representative and request a determination as to whether the Work or designated portion thereof is substantially complete. If Owner's Representative does not consider the Work substantially complete, Owner's Representative will notify CONTRACTOR giving reasons therefor. After performing any required Work, CONTRACTOR shall then submit another request for Owner's Representative to determine Substantial Completion. If Owner's Representative considers the Work substantially complete, Owner's Representative will prepare and deliver a certificate of Substantial Completion which shall establish the date of Substantial Completion, shall include a punch list of items to be completed or corrected before final payment, shall establish the time within which CONTRACTOR shall finish the punch list, and shall establish responsibilities of the OWNER and CONTRACTOR for security, maintenance, heat, utilities, damage to the Work, warranty and insurance. Failure to include an item on the punch list does not alter the responsibility of CONTRACTOR to complete all Work in accordance with the Contract Documents. If a Certificate of Occupancy is required by public authorities having jurisdiction over the Work, said certificate shall be issued before the Work or any portion thereof is considered substantially complete. The certificate of Substantial Completion shall be signed by OWNER and CONTRACTOR to evidence acceptance of the responsibilities assigned to them in such certificate.

14.7.2 OWNER shall have the right to exclude CONTRACTOR from the Work after the date of Substantial Completion, but OWNER will allow CONTRACTOR reasonable access to complete or correct items on the punch list and complete warranty work.

14.8 Partial Utilization: Use by OWNER, at OWNER's option, of any substantially completed part of the Work which: (i) has specifically been identified in the Contract Documents, or (ii) OWNER and CONTRACTOR agree constitutes a separately functioning and usable part of the Work that can be used by OWNER for its intended purpose without significant interference with CONTRACTOR's performance of the remainder of the Work, may be accomplished prior to Substantial Completion of all the Work in accordance with the following:

14.8.1 OWNER at any time may request CONTRACTOR to permit OWNER to use any such part of the Work which OWNER believes to be ready for its intended use and substantially complete. If CONTRACTOR agrees that such part of the Work is substantially complete, CONTRACTOR shall certify to Owner's Representative that such part of the Work is substantially complete and request Owner's Representative to issue a certificate of substantial Completion for that part of the Work. CONTRACTOR at any time may notify Owner's Representative that CONTRACTOR considers any such part of the Work ready for its intended use and substantially complete and request Owner's Representative to issue a certificate of Substantial Completion for that part of the Work. The provisions of paragraphs 14.7.1 and 14.7.2 will apply with respect to certification of Substantial Completion of that part of the Work and the division of responsibility in respect thereof and access thereto.

14.8.2 Such partial utilization is authorized by public authorities having jurisdiction over the Work.

14.9 Final Inspection: Upon Written Notice from CONTRACTOR that the entire Work or an agreed portion thereof is complete, Owner's Representative will make a final inspection with CONTRACTOR and provide Written Notice of all particulars in which this inspection reveals that the Work is incomplete or defective. CONTRACTOR shall immediately take such measures as are necessary to complete such Work or remedy such deficiencies.

14.10 Final Application for Payment: CONTRACTOR may make application for final payment following the procedure for progress payments after CONTRACTOR has completed all such corrections to the satisfaction of Owner's Representative and delivered the following documents:

14.10.1 Affidavit by CONTRACTOR certifying the payment of all debts and claims;

14.10.2 Three (3) complete operating and maintenance manuals, each containing maintenance and operating instructions, schedules, guarantees, and other documentation required by the Contract Documents;

14.10.3 Record documents (as provided in paragraph 6.10);

14.10.4 Consent of surety, if any, to final payment. If surety is not provided, complete and legally effective releases or waivers (satisfactory to OWNER) of all claims arising out of or filed in connection with the Work;

14.10.5 Certificate evidencing that insurance required by the Supplemental General Conditions will remain in force after final payment and through the warranty period;

14.10.6 Non-Use of Asbestos Affidavit (After Construction);

14.10.7 Subcontractor report and all other documentation necessary for evaluation of CONTRACTOR's fulfillment of the Contract MBE/WBE or DBE goals;

14.10.8 Documentation of notice to claimants, to the extent applicable and subject to subparagraph 14.11.4; and

14.10.9 Any other documentation called for in the Contract Documents.

14.11 Final Payment and Acceptance:

14.11.1 If, on the basis of observation of the Work during construction, final inspection, and review of the final Application for Payment and accompanying documentation as required by the Contract Documents, Owner's Representative is satisfied that the Work has been completed and CONTRACTOR's other obligations under the Contract Documents have been fulfilled and there are no outstanding claims, Owner's Representative will recommend the final Application for Payment and thereby notify the OWNER, who will pay to CONTRACTOR the balance due CONTRACTOR under the terms of the Contract. If the sole remaining unfinished item to complete the Work is the reestablishment of vegetation, CONTRACTOR may execute a revegetation letter with fiscal posted (letter of credit) to ensure completion of this item. This Work must be accomplished within one hundred twenty (120) Calendar Days of the date of Final Completion of the Work. When the permanent erosion control has been established, OWNER will initiate an inspection for final acceptance of the erosion controls. If the revegetation is not completed within the one hundred twenty (120) Calendar Days, OWNER, at its option, may complete the Work using the posted fiscal.

14.11.2 If the Contract measures Contract Time to Final Completion, rather than Substantial Completion, Owner's Representative will issue a letter of final acceptance to CONTRACTOR which establishes the Final Completion date and initiates the one-year warranty period. If the sole remaining unfinished item to complete the Work is the reestablishment of vegetation and CONTRACTOR has executed a revegetation letter with fiscal posted (letter of credit) to ensure completion of this item, the Owner’s Representative will issue a letter of conditional acceptance to CONTRACTOR which established the Final Completion date and initiates the one-year warranty period.

14.11.3 Final payment is considered to have taken place when CONTRACTOR or any of its representatives negotiates OWNER's final payment check, whether labeled final or not, for cash or deposits check in any financial institution for its monetary return.

14.11.4 The OWNER will withhold funds sufficient to cover the amount of any unresolved contract claims from final payment for six months under the following limited conditions:

.1 CONTRACTOR must provide written notice to the claimant (via certified mail or hand delivery) that (i) OWNER will hold funds in the amount of the disputed claim for six (6) months from the date of the receipt of the notice and (ii) CONTRACTOR and the claimant have certain alternative dispute resolution rights; and

.2 CONTRACTOR must provide OWNER with a copy of the receipted notice.

Provided the claimant has received notice under this section, OWNER will release the withheld funds, if the CONTRACTOR provides a bond in substantial compliance with the provisions of Section 52.231 of the Texas Property Code; when the OWNER receives a settlement or release of the claim with accompanying instructions regarding payment; upon resolution of the claim in litigation, if suit is filed within such six (6) month period and the OWNER receives written notice of such filing; or when such six (6) month period has passed, if no such bond, settlement, release, or notice of filing of suit have been received. The above provisions notwithstanding, if efforts to timely resolve a disputed claim are not

being made to OWNER'S reasonable satisfaction, OWNER may, in its complete discretion, file an interpleader action and deposit the withheld funds in the registry of a court of competent jurisdiction. In addition, CONTRACTOR must include a provision in each of its subcontracts that the prevailing party in any litigation arising thereunder will be entitled to recover its costs of court and reasonable attorney's fees.

14.12 Waiver of Claims: The making and acceptance of final payment will constitute:

14.12.1 a waiver of claims by OWNER against CONTRACTOR, except claims arising from unsettled claims, from defective Work appearing after final inspection, from failure to comply with the Contract Documents or the terms of any warranty specified therein, or from CONTRACTOR's continuing obligations under the Contract Documents; and

14.12.2 a waiver of all claims by CONTRACTOR against OWNER other than those previously made in writing and still unsettled.

ARTICLE 15 - SUSPENSION OF WORK AND TERMINATION

15.1 OWNER May Suspend Work Without Cause: At any time and without cause, OWNER may suspend the Work or any portion thereof for a period of not more than ninety (90) calendar days by Written Notice to CONTRACTOR which will fix the date on which the Work will be resumed. CONTRACTOR shall resume the Work on the date so fixed. CONTRACTOR shall be allowed an adjustment in the Contract Amount or an extension of the Contract Times, or both, directly attributable to any such suspension if CONTRACTOR makes an approved Claim therefor as provided in Articles 11 and 12.

15.2 OWNER May Terminate Without Cause: Upon seven (7) calendar days' Written Notice to CONTRACTOR, OWNER may, without cause and without prejudice to any right or remedy of OWNER, elect to terminate the Agreement. In such case, CONTRACTOR shall be paid (without duplication of any items):

15.2.1 for completed and acceptable Work executed in accordance with the Contract Documents prior to the effective date of termination;

15.2.2 for reasonable demobilization costs;

15.2.3 for anticipated profits on completed and accepted Work not previously paid and not included in separate pay items calculated to date of termination but not for anticipated profit on the entire Contract not previously paid, unabsorbed overhead, or lost opportunity; and

15.2.4 for all claims incurred in settlement of terminated contracts with Subcontractors, Suppliers and others, including for anticipated profits on completed and accepted Work not previously paid and not included in separate pay items calculated to date of termination but not for anticipated profit on the entire Contract not previously paid, unabsorbed overhead, or lost opportunity. CONTRACTOR agrees to negotiate in good faith with Subcontractors, Suppliers and others to mitigate OWNER's cost.

15.3 OWNER May Terminate With Cause:

15.3.1 Upon the occurrence of any one or more of the following events:

.1 if CONTRACTOR persistently fails to perform the Work in accordance with the Contract Documents;

.2 if CONTRACTOR disregards laws or regulations of any public body having jurisdiction;

.3 if CONTRACTOR disregards the authority of Owner's Representative;

.4 if CONTRACTOR makes fraudulent statements;

.5 if CONTRACTOR fails to maintain a work force adequate to accomplish the Work within the Contract Time;

.6 if CONTRACTOR fails to make adequate progress and endangers successful completion of the Contract; or

.7 if CONTRACTOR otherwise violates in any substantial way any provisions of the Contract Documents;

OWNER may, after giving CONTRACTOR (and the surety, if any) seven (7) calendar days Written Notice terminate the services of CONTRACTOR. OWNER, at its option, may proceed with negotiation with surety for completion of the Work. Alternatively, OWNER may under these circumstances exclude CONTRACTOR from the site and take possession of the Work (without liability to CONTRACTOR for trespass or conversion), incorporate in the Work all materials and equipment stored at the site or for which OWNER has paid CONTRACTOR but which are stored elsewhere, and finish the Work as OWNER may deem expedient. In such case CONTRACTOR shall not be entitled to receive any further payment until the Work is finished. If the unpaid balance of the Contract Amount exceeds all claims, costs, losses and damages sustained by OWNER arising out of or resulting from completing the Work, such excess will be paid to CONTRACTOR. If such claims, costs, losses and damage exceed such unpaid balance, CONTRACTOR or surety shall pay the difference to OWNER. In the event that a termination for cause is found to be wrongful, the termination shall be converted to a termination without cause as set forth in Section 15.2 and CONTRACTOR'S remedy for wrongful termination is limited to the recovery of the payments permitted for termination without cause as set forth in Section 15.2.

15.3.2 Where CONTRACTOR's services have been so terminated by OWNER, the termination will not affect any rights or remedies of OWNER against CONTRACTOR and surety then existing or which may thereafter accrue. Any retention or payment of moneys due CONTRACTOR by OWNER will not release CONTRACTOR from liability. In the event OWNER terminates Contract with cause, OWNER may reject any and all Bids submitted by CONTRACTOR for up to three (3) years after the date of such termination. These Progressive Sanctions will be administered in accordance with the City of Austin Purchasing Office Probation, Suspension, and Debarment Procedures for Vendors, which include notice and an opportunity for a hearing.

15.4 CONTRACTOR May Stop Work or Terminate: If through no act or fault of CONTRACTOR, the Work is suspended for a period of more than ninety (90) calendar days by OWNER or under an order of court or other public authority, or (except during disputes) Owner's Representative fails to forward for processing any mutually acceptable Application for Payment within thirty (30) calendar days after it is submitted, or (except during disputes) OWNER fails for sixty (60) calendar days after it is submitted to pay CONTRACTOR any sum finally determined by OWNER to be due, then CONTRACTOR may, upon seven (7) calendar days' Written Notice to OWNER, and provided OWNER does not remedy such suspension or failure within that time, terminate the Agreement and recover from OWNER payment on the same terms as provided in paragraph 15.2. In lieu of terminating the Agreement and without prejudice to any other right or remedy, if (except during disputes) Owner's Representative has failed to forward for processing any mutually acceptable Application for Payment within thirty (30) calendar days after it is submitted, or (except during disputes)

OWNER has failed for sixty (60) calendar days after it is submitted to pay CONTRACTOR any sum finally determined by OWNER to be due, CONTRACTOR may upon seven (7) calendar days' Written Notice to OWNER stop the Work until payment of all such amounts due CONTRACTOR, including interest thereon. The provisions of this paragraph 15.4 are not intended to preclude CONTRACTOR from making a Claim under Articles 11 and 12 for an increase in Contract Amount or Contract Times or otherwise for expenses or damage directly attributable to CONTRACTOR's stopping Work as permitted by this paragraph.

15.5 Discretionary Notice to Cure: In its complete discretion, OWNER may, but is not required to, provide a Notice to Cure to CONTRACTOR and its surety to cure an event of default described above and/or an anticipatory breach of contract and, if required by OWNER, to attend a meeting with OWNER, regarding the Notice to Cure, the event of default, and/or the anticipatory breach of contract. The Notice to Cure will set forth the time limit in which the cure is to be completed or commenced and diligently prosecuted. Upon receipt of any Notice to Cure, CONTRACTOR shall prepare a report describing its program and measures to affect the cure of the event of default and/or anticipatory breach of contract within the time required by the Notice to Cure. The CONTRACTOR'S report must be delivered to OWNER at least three (3) days prior to any requested meeting with the OWNER and surety.

15.6 Bankruptcy: If CONTRACTOR declares bankruptcy or is adjudged bankrupt or makes an assignment for the benefit of creditors or if a receiver is appointed for the benefit of creditors or if a receiver is appointed by reason of CONTRACTOR'S insolvency, CONTRACTOR may be unable to perform this Contract in accordance with the Contract requirements. In such an event, OWNER may demand CONTRACTOR or its successor in interest provide OWNER with adequate assurance of CONTRACTOR'S future performance in accordance with the terms and conditions of the Contract. If CONTRACTOR fails to provide adequate assurance of future performance to OWNER'S reasonable satisfaction within ten (10) days of such a request, OWNER may terminate the CONTRACTOR'S services for cause or without cause, as set forth above. If CONTRACTOR fails to provide timely adequate assurance of its performance and actual performance, OWNER may prosecute the Work with its own forces or with other contractors on a time and material or other appropriate basis and the cost of which will be charged against the Contract balance.

15.7 Duty to Mitigate: In the event of any termination or suspension under this Contract, the CONTRACTOR agrees to and shall take all reasonable actions to mitigate its damages and any and all claims which may be asserted against the OWNER.

15.8 Responsibility during Demobilization: While demobilizing, the CONTRACTOR will take all necessary and reasonable actions to preserve and protect the Work, the site and other property of the OWNER or others at the site.

ARTICLE 16 - DISPUTE RESOLUTION

16.1 Filing of Claims:

16.1.1 Claims arising from the circumstances identified in paragraphs 3.2, 4.1, 4.2.2, 4.2.4, 6.4.2, 6.11.5.2, 6.17, 7.5, 8.6, 9.5, 10.4.2, 13.4.3, 13.8, 13.9, 15.1, 15.2, 15.3, or 15.4, or other occurrences or events, shall be made by Written Notice delivered by the party making the Claim to the other party within thirty (30) calendar days after the start of the occurrence or event giving rise to the Claim and stating the general nature of the Claim. Notice of the amount of the Claim with supporting data shall be delivered in writing within thirty (30) calendar days after Written Notice of Claim is delivered by claimant and shall represent that the adjustment claimed covers all known amounts and/or extensions of time to which claimant is entitled.

16.1.2 Within thirty (30) calendar days of receipt of notice of the amount of the Claim with supporting data, Owner's Representative and CONTRACTOR shall meet to discuss the Claim, after which an offer of settlement or notification of no settlement offer will be made to claimant. If claimant is not satisfied with the proposal presented, claimant shall have thirty (30) calendar days in which to: (i) submit additional supporting data requested by the other party; (ii) modify the initial Claim; or (iii) request Alternative Dispute Resolution.

16.2 Alternative Dispute Resolution:

16.2.1 If a dispute exists concerning a Claim, the parties agree to use the following procedure prior to pursuing any other available remedies. OWNER reserves the right to include the E/A as a party.

16.2.2 Negotiating with Previously Uninvolved Personnel: Either party may make a written request for a meeting to be held between representatives of each party within fourteen (14) Calendar Days of the request or such later period that the parties may agree to. Each party shall endeavor to include, at a minimum, one (1) previously uninvolved senior level decision maker (an owner, officer, or employee of each organization) empowered to negotiate on behalf of their organization. If a previously uninvolved senior level decision maker is unavailable due to the size of the CONTRACTOR'S organization or any other reason, the CONTRACTOR shall nonetheless provide an appropriate senior level decision maker for the meeting. The purpose of this and any subsequent meetings will be good faith negotiations of the matters constituting the dispute. Negotiations shall be concluded within thirty (30) Calendar Days of the first meeting, unless mutually agreed otherwise. This step may be waived by a written agreement signed by both parties, in which event the parties may proceed directly to mediation as described below.

16.2.3 Mediation:

.1 If the procedure described in 16.2.2 proves unsuccessful or is waived pursuant to its terms, the parties shall initiate the mediation process. OWNER and CONTRACTOR agree to select within thirty (30) calendar days a mediator trained in mediation skills, to assist with resolution of the dispute. OWNER and CONTRACTOR agree to act in good faith in the selection of the mediator and to give consideration to qualified individuals nominated to act as mediator. Nothing in this agreement prevents the parties from relying on the skills of a person who also is trained in the subject matter of the dispute and/or a contract interpretation expert. Should the parties fail to agree on a mediator within thirty (30) calendar days of initiation of the mediation process, the parties agree to ask the Travis County Dispute Resolution Center to select a qualified individual, which selection shall be binding on the parties.

.2 Mediation is a forum in which an impartial person, the mediator, facilitates communication between parties to promote reconciliation, settlement, or understanding among them. The parties hereby agree that mediation, at a minimum, shall provide for (i) conducting an on-site investigation, if appropriate, by the mediator for fact gathering purposes, (ii) a meeting of all parties for the exchange of points of view and (iii) separate meetings between the mediator and each party to the dispute for the formulation of resolution alternatives. The parties agree to participate in mediation in good faith for up to thirty (30) calendar days from the date of the first mediation session, unless mutually agreed otherwise. Should the parties fail to reach a resolution of the dispute through mediation, then each party is released to pursue other remedies available to them.

16.3 Resolution of Disputes between Contractor and Subcontractor or Supplier: If a dispute exists concerning a claim between a CONTRACTOR and a Subcontractor or Supplier, the CONTRACTOR agrees to participate with such Subcontractor and/or Supplier in a process substantially paralleling the steps set out in paragraphs 16.1 and 16.2 above, including the delivery of written notices, submission of supporting data, negotiation with previously uninvolved personnel, and, if such alternative dispute resolution process is unsuccessful, mediation between the parties to the claim. If the CONTRACTOR and Subcontractor or Supplier agreement provides an alternative dispute resolution process, which provides substantially equivalent rights to those set forth herein, it may be followed, unless the CONTRACTOR and affected Subcontractor or Supplier agree to follow the process outlined above. The OWNER is not a party to the alternative dispute resolution process between the CONTRACTOR and Subcontractor or Supplier and will not pay any costs incurred in the process. Each party will be responsible for its own expenses incurred in the process, which will include an equal share of the mediation expenses, unless otherwise determined by the mediator. NOTICE: THE PROCESS SET FORTH HEREIN IS NOT A SUBSTITUTE FOR THE STATUTORY PAYMENT BOND CLAIM PROCESS.

16.4 Claim Calculation:

16.4.1 Delay Claims: The intent of paying for delay damages is to reimburse the CONTRACTOR for actual expense arising out of a compensable delay. No profit or force account markups, other than labor burden, will be allowed for delay claims by the CONTRACTOR seeking reimbursement for expenses arising out of an alleged event of delay. No consequential damages will be allowed to the CONTRACTOR in connection with any claimed delays. If the CONTRACTOR requests compensation for delay damages and the delay is determined to be compensable, then standby equipment costs and project overhead compensation will be based on the duration of the compensable delay and the following:

.1 Standby equipment costs will not be allowed during periods when the equipment would have otherwise been idle. Standby equipment time will not exceed more than eight (8) hours per twenty-four (24) hour day, forty (40) hours per week, and one hundred seventy-six (176) hours per month. Standby equipment costs will be paid at 50 percent (50%) of the applicable Rental Rate Blue Book rates and calculated by dividing the monthly rate by one hundred seventy-six (176), multiplying the result by the number of standby hours and multiplying that number by the regional adjustment factor and the rate adjustment factor contained in the Blue Book. Operating costs will not be allowed.

.2 Project overhead will be determined from actual costs that the CONTRACTOR will be required to document. Project overhead is defined as the administrative and supervisory expenses incurred at the work site and will not include home office overhead.

16.4.2 General: Except as limited with respect to delay claims, as set forth above, the criteria set forth in Section 11.4.1 may be used as a basis to calculate an adjustment in the Contract Amount in the resolution of a claim, provided that there will be no compensation for home office overhead.

16.5 MBE/WBE Program Progressive Sanctions: CONTRACTOR is subject to progressive sanctions for failure of CONTRACTOR to comply with Austin City Code, Chapter 2-9A, as amended: “Minority-owned and Women-owned Business Enterprise Procurement Program.” Available sanctions for Program violations are set forth in Program rules adopted by the Small and Minority Business Resources Department (SMBR), as amended, and may include the following progressive sanctions for Program violations within a rolling 24-month period: (i) a period of probation for up to six (6) months for the first violation (ii) a period of suspension from bidding for up to 24 months for the second violation, and (iii) a period of

debarment for up to five (5) years for the third violation. If the CONTRACTOR engages in more than one of the violations listed below at any given time, OWNER has the discretion to determine whether such actions should be counted as multiple violations of the MBE/WBE Ordinance. Program violations include:

.1 providing false or misleading information to the OWNER in connection with the submission of a Bid, responses to request for qualifications or Proposals, Good Faith Efforts documentation, post award compliance or other Program operations;

.2 substituting M/WBE Subcontractors without first receiving approval for such substitutions;

.3 failure to comply with the approved Compliance Plan without an approved request for a change, an approved Change Order or other approved change to the Contract;

.4 violation of any other provision of the "Minority-owned and Women-owned Business Enterprise Procurement Program";

.5 providing false or misleading information to the OWNER in connection with an application for or challenge to certification, recertification or decertification as a MBE/WBE; and

.6 bid shopping.

The Progressive Sanctions will be administered in accordance with the City of Austin Purchasing Office Probation, Suspension, and Debarment Procedures for Vendors, which includes notice and an opportunity for a hearing.

ARTICLE 17 – MISCELLANEOUS

17.1 Venue: In the event of any suit at law or in equity involving the Contract, venue shall be exclusively in Travis County, Texas and the laws of the State of Texas shall apply to the interpretation and enforcement of the Contract.

17.2 Extent of Agreement: This Contract represents the entire and integrated agreement between the OWNER and CONTRACTOR with respect to the subject matter hereof and supersedes all prior negotiations, representations or agreements, either written or oral.

17.3 Cumulative Remedies: The rights and remedies available to the parties are not to be construed in any way as a limitation of any rights and remedies available to any or all of them which are otherwise imposed or available by laws or regulations, by special warranty or guarantees or by other provisions of the Contract Documents, and the provisions of this paragraph will be as effective as if repeated specifically in the Contract Documents in connection with each particular duty, obligation, right and remedy to which they apply. Specifically, the OWNER is not required to only assess liquidated damages, and OWNER may elect to pursue its actual damages resulting from the failure of the CONTRACTOR to complete the Work in accordance with the requirements of the Contract Documents.

17.4 Severability: If any word, phrase, clause, sentence or provision of the Contract, or the application of same to any person or set of circumstances is for any reason held to be unconstitutional, invalid or unenforceable, that finding shall only effect such word, phrase, clause, sentence or provision, and such finding shall not affect the remaining portions of this Contract; this being the intent of the parties in entering into the Contract; and all provisions of the Contract are declared to be severable for this purpose.

17.5 Independent Contractor: The Contract shall not be construed as creating an employer/employee relationship, a partnership, or a joint venture. CONTRACTOR is an independent contractor and CONTRACTOR's services shall be those of an independent contractor. CONTRACTOR agrees and understands that the Contract does not grant any rights or privileges established for employees of OWNER.

17.6 Prohibition of Gratuities: OWNER may, by Written Notice to CONTRACTOR, terminate the Contract without liability if is determined by OWNER that gratuities were offered or given by CONTRACTOR or any agent or representative of CONTRACTOR to any officer or employee of OWNER with a view toward securing the Contract or securing favorable treatment with respect to the awarding or amending or the making of any determinations with respect to the performing of such Contract. In the event the Contract is terminated by OWNER pursuant to this provision, OWNER shall be entitled, in addition to any other rights and remedies, to recover or withhold the amount of the cost incurred by CONTRACTOR in providing such gratuities.

17.7 Prohibition Against Personal Interest in Contracts: No officer, employee, independent consultant, or elected official of OWNER who is involved in the development, evaluation, or decision-making process of the performance of any solicitation shall have a financial interest, direct or indirect, in the Contract resulting from that solicitation. Any violation of this provision, with the knowledge, expressed or implied, of CONTRACTOR shall render the Contract voidable by OWNER.

17.8 OWNER'S Right to Audit:

17.8.1 Records means all records generated by or on behalf of CONTRACTOR and each Subcontractor and Supplier of CONTRACTOR, whether paper, electronic, or other media, which are in any way related to performance of or compliance with this Contract, including, without limitation:

.1 accounting records;

.2 written policies and procedures;

.3 subcontract files (including proposals of successful and unsuccessful Bidders, Bid recaps, etc.);

.4 original estimates and estimating work sheets;

.5 correspondence;

.6 Change Order files (including documentation covering negotiated settlements);

.7 back charge logs and supporting documentation;

.8 general ledger entries detailing cash and trade discounts earned, insurance rebates and dividends;

.9 lump sum agreements between CONTRACTOR and any Subcontractor or Supplier;

.10 records necessary to evaluate: Contract compliance, Change Order pricing, and any Claim submitted by CONTRACTOR or any of its payees; and

.11 any other CONTRACTOR record that may substantiate any charge related to this Contract.

17.8.2 CONTRACTOR shall allow OWNER'S agent or its authorized representative to inspect, audit, and/or reproduce, or all three, all Records generated by or on behalf of CONTRACTOR and each Subcontractor and Supplier, upon OWNER'S written request. Further, CONTRACTOR shall allow OWNER'S agent or authorized

representative to interview any of CONTRACTOR'S employees, all Subcontractors and all Suppliers, and all their respective employees.

17.8.3 CONTRACTOR shall retain all its Records, and require all its Subcontractors and Suppliers to retain their respective Records, during this Contract and for three (3) years after final payment, until all audit and litigation matters that OWNER has brought to the attention of CONTRACTOR are resolved, or as otherwise required by law, whichever is longer. OWNER'S right to inspect, audit, or reproduce Records, or interview employees of CONTRACTOR or its respective Subcontractors or Suppliers exists during this Contract, and for three (3) years after final payment, until all audit and litigation matters that OWNER has brought to CONTRACTOR'S attention are resolved, or as otherwise required by law, whichever is longer, and at no cost to OWNER, either from CONTRACTOR or any of its Subcontractors or Suppliers that may furnish Records or make employees available for interviewing.

17.8.4 CONTRACTOR must provide sufficient and accessible facilities during its normal business hours for OWNER to inspect, audit, or reproduce Records, or all three, and to interview any person about the Records.

17.8.5 CONTRACTOR shall insert these requirements in each written contract between CONTRACTOR and any Subcontractor or Supplier and require each Subcontractor and Supplier to comply with these provisions.

17.9 Survival: The terms and conditions of this Contract, which contemplate a period of time beyond completion or termination will survive such completion or termination and not be merged therein or otherwise terminated.

17.10 No Waiver: The waiver of any provision of this Contract will not be deemed to be a waiver of any other provision of this Contract. No waiver of any provision of this Contract will be deemed to constitute a continuing waiver unless expressly provided in writing, nor will a waiver of any default be deemed a waiver of any subsequent defaults of the same type. The failure at any time to enforce this Contract, whether the default is known or not, shall not constitute a waiver or estoppel of the right to do so.

17.11 Conditions Precedent to Right to Sue: Notwithstanding anything herein to the contrary, the CONTRACTOR will have at least 90 days to give notice of a claim for damages as a condition precedent to the right to sue on the Contract, subject to the contractual claim and alternative dispute resolution processes set forth herein.

17.12 Waiver of Trial by Jury: OWNER and CONTRACTOR agree that they have knowingly waived the right to trial by jury and have instead agreed that, in the event of any litigation arising out of or connected to this Contract, to proceed with a trial before the court, unless both parties subsequently agree otherwise in writing.

17.13 Contractor Evaluation: The Owner will review and evaluate the Contractor's Work and performance on the Project and provide the Contractor with a written Contractor Evaluation Report in accordance with City of Austin Administrative Rule R161-13.37. Rule R161-13.37 provides an appeal process.

http://www.austintexas.gov/department/contract-management

End

The Supplemental General Conditions contained herein amend or supplement the General Conditions, Section 00700.

ARTICLE 1 - DEFINITIONS

Add the following definition:

"1.20 Engineer/Architect (E/A): Add the following:

Name: Byron Chavez, PE

Address: 8140 North MoPac Expy, Building 2, Suite 100, Austin, Texas 78759"

ARTICLE 2 - PRELIMINARY MATTERS

2.4 Before Starting Construction:

Add the following:

"**.1** Baseline Schedule shall include the following Milestones:

- Shop Drawings
- Approval of Shop Drawings
- Fabrication
- Delivery
- Construction Activity must end (Final Completion) before or begin after SXSW (March 10-17, 2017). These dates do not preclude Contractor from performing other activities such as shop drawings and fabrication.;"

Delete 2.4.2.6 and replace with the following (changes to the original text are identified by underlining):

"**.6** a preliminary schedule of values for all of the Work, subdivided into component parts in sufficient detail to serve as the basis for progress payments during construction. At a minimum, the schedule of values shall be broken out by trade and split between materials and labor. Prices will include an appropriate amount of overhead and profit applicable to each item of Work;"

ARTICLE 5 - BONDS AND INSURANCE

"5.3 Insurance:

5.3.1 CONTRACTOR Provided Insurance

5.3.1.1 General Requirements.

.1 CONTRACTOR shall carry insurance in the types and amounts indicated below for the duration of the Contract, which shall include items owned by OWNER in the care, custody and control of CONTRACTOR prior to and during construction and warranty period.

.2 CONTRACTOR must complete and forward the Certificate of Insurance, Section 00650, to OWNER before the Contract is executed as verification of coverage required below. CONTRACTOR shall not commence Work until the required insurance is obtained and until such insurance has been reviewed by OWNER. Approval of insurance by OWNER shall not relieve or decrease the liability of CONTRACTOR hereunder and shall not be construed to be a limitation of liability on the part of CONTRACTOR. CONTRACTOR must also complete and forward the Certificate of Insurance, Section 00650, to OWNER whenever a previously identified policy period has expired as verification of continuing coverage.

.3 CONTRACTOR's insurance coverage is to be written by companies licensed to do business in the State of Texas at the time the policies are issued and shall be written by companies with A.M. Best ratings of B+VII or better, except for hazardous material insurance which shall be written by companies with A.M. Best ratings of A- or better.

.4 All endorsements naming the OWNER as additional insured, waivers, and notices of cancellation endorsements as well as the Certificate of Insurance shall indicate: City of Austin, Capital Contracting Office, P.O. Box 1088, Austin, Texas 78767.

.5 The "other" insurance clause shall not apply to the OWNER where the OWNER is an additional insured shown on any policy. It is intended that policies required in the Contract, covering both OWNER and CONTRACTOR, shall be considered primary coverage as applicable.

.6 If insurance policies are not written for amounts specified below, CONTRACTOR shall carry Umbrella or Excess Liability Insurance for any differences in amounts specified. If Excess Liability Insurance is provided, it shall follow the form of the primary coverage.

.7 OWNER shall be entitled, upon request and without expense, to receive certified copies of policies and endorsements thereto and may make any reasonable requests for deletion or revision or modification of particular policy terms, conditions, limitations, or exclusions except where policy provisions are established by law or regulations binding upon either of the parties hereto or the underwriter on any such policies.

.8 OWNER reserves the right to review the insurance requirements set forth during the effective period of this Contract and to make reasonable adjustments to insurance coverage, limits, and exclusions when deemed necessary and prudent by OWNER based upon changes in statutory law, court decisions, the claims history of the industry or financial condition of the insurance company as well as CONTRACTOR.

.9 CONTRACTOR shall not cause any insurance to be canceled nor permit any insurance to lapse during the term of the Contract or as required in the Contract.

.10 CONTRACTOR shall be responsible for premiums, deductibles and self-insured retentions, if any, stated in policies. All deductibles or self-insured retentions shall be disclosed on the Certificate of Insurance.

.11 CONTRACTOR shall provide OWNER thirty (30) days written notice of erosion of the aggregate limits below occurrence limits for all applicable coverages indicated within the Contract.

.12 If OWNER owned property is being transported or stored off-site by CONTRACTOR, then the appropriate property policy will be endorsed for transit and storage in an amount sufficient to protect OWNER's property.

.13 The insurance coverages required under this contract are required minimums and are not intended to limit the responsibility or liability of CONTRACTOR.

5.3.1.2 Business Automobile Liability Insurance. Provide coverage for all owned, non-owned and hired vehicles. The policy shall contain the following endorsements in favor of OWNER:

a) Waiver of Subrogation endorsement CA 0444;

b) 30 day Notice of Cancellation endorsement CA 0244; and

c) Additional Insured endorsement CA 2048.

Provide coverage in the following types and amounts:

.1 A minimum combined single limit of $500,000 per occurrence for bodily injury and property damage. Alternate acceptable limits are $250,000 bodily injury per person, $500,000 bodily injury per occurrence and at least $100,000 property damage liability each accident.

5.3.1.3 Workers' Compensation And Employers' Liability Insurance. Coverage shall be consistent with statutory benefits outlined in the Texas Workers' Compensation Act (Section 401). CONTRACTOR shall assure compliance with this Statute by submitting two (2) copies of a standard certificate of coverage (e.g. ACCORD form) to Owner's Representative for every person providing services on the Project as acceptable proof of coverage. The Certificate of Insurance, Section 00650, must be presented as evidence of coverage for CONTRACTOR. CONTRACTOR's policy shall apply to the State of Texas and include these endorsements in favor of OWNER:

a) Waiver of Subrogation, form WC 420304; and

b) 30 day Notice of Cancellation, form WC 420601.

The minimum policy limits for Employers' Liability Insurance coverage shall be as follows:

.1 $100,000 bodily injury per accident, $500,000 bodily injury by disease policy limit and $100,000 bodily injury by disease each employee.

5.3.1.4 Commercial General Liability Insurance. The Policy shall contain the following provisions:

a) Contractual liability coverage for liability assumed under the Contract and all contracts relative to this Project.

b) Completed Operations/Products Liability for the duration of the warranty period.

c) Explosion, Collapse and Underground (X, C & U) coverage.

d) Independent Contractors coverage (Contractors/ Subcontractors work).

e) Aggregate limits of insurance per project, endorsement CG 2503.

f) OWNER listed as an additional insured, endorsement CG 2010 and CG 2037 or equivalent.

g) 30 day notice of cancellation in favor of OWNER, endorsement CG 0205.

h) Waiver of Transfer of Recovery Against Others in favor of OWNER, endorsement CG 2404.

Provide coverages A&B with minimum limits as follows:

.1 A combined bodily injury and property damage limit of $500,000 per occurrence.

5.3.1.7 Professional Liability Insurance. For Work which requires professional engineering or professional survey services to meet the requirements of the Contract, including but not limited to excavation safety systems, traffic control plans, and construction surveying, the CONTRACTOR or Subcontractors, responsible for performing the professional services shall provide Professional Liability Insurance with a minimum limit of $500,000 per claim and in the aggregate to pay on behalf of the assured all sums which the assured shall become legally obligated to pay as damages by reason of any negligent act, error, or omission committed with respect to all professional services provided in due course of the Work of this Contract.

ARTICLE 6 - CONTRACTOR'S RESPONSIBILITIES

6.6 Permits, Fees: Add the following:

"OWNER will obtain and pay for the following permits, licenses and/or fees:

.1 Site Development Permit.

.2 Building Permit(s). OWNER's responsibility for obtaining and paying for the Building Permit(s) shall be limited to the following where applicable: the required Electrical Service (Aid of Construction) Fee, Water and Wastewater Tap Fees, Water and Wastewater Capital Recovery Fees, and Septic Permit Fee. The OWNER's responsibility for obtaining and paying for the Building Permit(s) excludes securing and paying for the following where applicable: Driveway Permit (Concrete) Fee, Electrical Permit, Mechanical Permit, Plumbing Permit, Water Engineering Inspection Fee, Temporary Use of Right-of Way Permit, the gas company's Gas Yard Line

ARTICLE 13 - TESTS AND INSPECTIONS; CORRECTION, REMOVAL OR ACCEPTANCE OF DEFECTIVE WORK

13.7 Warranty Period: Add the following:

"**13.7.5** OWNER will utilize a "Warranty Item Form" (attached at the end of this Section) for the purpose of providing Written Notice of warranty defects to CONTRACTOR. CONTRACTOR shall date, sign, complete and return the form to OWNER when the defect is corrected, including such information on or attached to the form to describe the nature of the repairs or corrections that were made. If the defect cannot be corrected in seven (7) Calendar Days, CONTRACTOR shall provide a written explanation to the Owner's Representative describing the repairs needed and the time required to complete the repairs."

WARRANTY ITEM NO. _____ (PROJECT NAME)

The General Conditions of the Contract require that Warranty Defects be corrected within 7 days after written notice is received.

TO: _____
contractor name address / telephone / fax / email

ATTENTION OF: _____

FROM: _____
project manager name / address / telephone / fax / email

PROJECT: _____
name / location / CIP ID number

END OF ONE YEAR WARRANTY:_____

SUBJECT:_____

[ ] If checked, the damage requires immediate attention. The Contractor has been called.
[ ] If checked, the Consultant has been asked to consult with the Contractor on the problem.

PLEASE CORRECT OR REPAIR THE FOLLOWING ITEM(S):

DATE OF REQUEST_____ **SIGNATURE** _____
Project Manager

xc:
[ ] _____Phone No._____
[ ] _____Phone No._____
[ ] _____Phone No._____
[ ] _____Phone No._____

RESPONSE FROM CONTRACTOR: DATE CORRECTION WAS MADE:_____

The Contractor must endeavor to correct the defect within 7 calendar days after written notice is given. If the defect cannot be corrected in that time, Contractor shall provide a written explanation to the Owner's Representative describing the repairs needed and the time required to complete the repairs.

Description of corrections made:

DATE OF REPLY_____SIGNATURE_____

When the repair is complete, the contractor should return a copy to each of the following:

[ ] _____Phone No._____
[ ] _____Phone No._____
[ ] _____Phone No._____
[ ] _____Phone No._____

END

SECTION 00100 – INSTRUCTIONS TO BIDDERS

Delete Paragraph7(e), Paragraph 9.B (13), and Paragraph 11.1 as Section 00400 (Bidders Experience) is not required for this project.

Delete Paragraph 13, Partnering, and replace with the following:

"**13. Partnering**

To complete this Work most beneficially for all parties, OWNER desires to form a Partnering Team among OWNER, E/A, CONTRACTOR, and Subcontractor(s). This relationship will draw on the strength of all parties to identify and achieve mutual goals. The objectives are effective and efficient Contract performance, intended to achieve completion within budget, on schedule, and in accordance with the Drawings and Specifications. The partnering relationship will be multilateral in makeup and participation will be totally voluntary. Refer to Section 01100, Special Project Procedures, and/or Section 01200, Project Meetings, for clarification of the intents and responsibilities of the persons and entities entering into the partnering charter."

END

I. Payment

A. Classification Definitions, Building and Heavy and Highway

Definitions for Building Construction and Heavy and Highway classifications shall conform to the current "Dictionary of Occupational Titles" as published by the U.S. Department of Labor.

B. Minimum Wages

Workers on Project shall be paid not less than wage rates, including fringe benefits, as published by the Department of Labor (DOL) or the $13.03 minimum wage required by City of Austin Ordinance No. 20160324-015, whichever is higher. The Total Minimum Wage required can be met using any combination of cash and non-cash qualified fringe benefits provided the cash component meets or exceeds the $13.03 minimum wage required.

Such wage rates shall be used throughout the Contract. If a classification is to be used, which is not listed in the attached wage rates, CONTRACTOR shall submit to OWNER rates and classification proposed for use, for approval, **prior** to performance of the Work.

All laborers and mechanics working upon the Work for this Project shall be paid unconditionally and without subsequent deduction or rebate on any account (except such payroll deductions as are permitted by regulations issued by Secretary of Labor under the Copeland Act, Title 29 CFR, Part 3) full wages accrued and when due, computed at rates not less than wage rates bound herein pertaining to type of Work being performed. When Work is of such a nature that both Building and Heavy and Highway wage scales are incorporated into contract, CONTRACTOR shall pay wage rates to mechanics or laborers performing Work in more than one classification at the rate indicated for each classification for time actually worked as determined by area practice applicable to type (Site Construction Crafts or Building Construction Crafts) of Work being performed without regards to skill. Salaried specialists (project superintendent and administrative personnel only) in the permanent employment of CONTRACTOR do not fall under any Wage Classification. A supervisor/foreman who is not exempt under 29CFR Part 541 and who spends more than a substantial amount of time (20 percent) in a given workweek as a laborer or mechanic must be paid the applicable Wage Rate for the classification of work performed for all hours engaged in such work as a laborer or mechanic.

Wage rates shall be posted by CONTRACTOR at site(s) of Work in prominent, easily accessible places where they can be seen by all workers. The following shall also be posted by the CONTRACTOR: City of Austin wage contact posters (English and Spanish), City of Austin Equal Employment Opportunity posters (English and Spanish), Workers' Compensation Notice (English and Spanish), Texas Payday Law (English and Spanish), City Rest Break Ordinance (English

and Spanish), City of Austin Non-Discrimination Statement (related to Title VI of the Civil Rights Act), and Federal Notices, as appropriate.

C. Overtime Requirements

No CONTRACTOR, Subcontractor, or Sub-subcontractor contracting for any part of contract Work which may require or involve the employment of laborers or mechanics shall require or permit any laborer or mechanic in any workweek in which he is employed on such Work, to work in excess of forty hours in such workweek unless such laborer or mechanic receives compensation at a rate not less than one and one-half times their basic rate of pay for all hours in excess of forty hours in such workweek.

Overtime wages must be calculated using the Adjusted Wage Rate specified in the Wage Rate Determination or the actual basic rate of pay, whichever is higher.

II. Apprentices

Locally & Federally Funded Projects

The terms journeyman and apprentice apply to both union and independent workers, and are not intended to imply that these positions are union workers only.

Apprentices and Trainees will be permitted to work as such only when they are registered, individually, under a bonafide Apprenticeship or Trainee program registered with the Bureau of Apprenticeship and Training, United States Department of Labor. The allowable ratio of Apprentices or Trainees to journeymen in any craft classification shall not be greater than the ratio permitted to CONTRACTOR as stated in the registered apprenticeship program standards. Any employee listed on a payroll at an Apprentice or Trainee wage rate, who is not registered as above, shall be paid the wage rate provided in Contract for Work employee actually performed. CONTRACTOR, Subcontractor, or Sub-subcontractor shall furnish to OWNER written evidence of registration of his program for Apprentices and Trainees as well as of the appropriate ratios and wage rates, for the area of construction **prior** to using any Apprentices or Trainees on this Contract.

III. Withholding of Payments

OWNER may withhold or cause to be withheld from CONTRACTOR as much of the accrued payments as necessary to pay laborers and mechanics employed by CONTRACTOR, Subcontractors, or Sub-subcontractors the amount of wages required to comply with the Contract. In the event of nonpayment of wages to laborers or mechanics working on the site of the Work of this Contract, OWNER may, after Written Notice to CONTRACTOR, take such action as may be necessary to cause suspension of any further payments or advance of funds to CONTRACTOR until such violations have ceased and until restitution has been made. Payments may also be withheld if CONTRACTOR fails to maintain weekly payroll reports or fails to provide copies in a timely manner upon request of Owner.

IV. Payrolls

A. CONTRACTOR shall keep records showing:

1. the name, address and occupation of each worker employed by the CONTRACTOR or subcontractor(s) in the construction of the public work.

2. the actual per diem wages paid to each worker.

3. Employee Certification. CONTRACTOR, all levels of Subcontractors shall identify in writing, the classification agreed to by all laborers and mechanics employed by them in the execution of the Contract, and pay not less than rates specified in the attached Wage Rate Determination(s). Contractor shall prepare a completed form for the signature of Employee and a witness shall sign the form in the presence of Employee. If work performed by worker is different than the trade classification agreed upon, the worker shall be paid for that work no less than the minimum prevailing wage for that specified trade.

4. Payroll Deduction Authorization Form. CONTRACTOR, Subcontractor, and Subsubcontractor shall prepare for employee signature a payroll deduction authorization form to identify all payroll deductions excluding those required by statute, such as federal income taxes, medicare and social security.

B. The record shall be open at all reasonable hours to inspection by the officers and agents of the Owner as requested. CONTRACTOR will be responsible to provide copies of records as requested by the Owner within two (2) working days. Payrolls relating to this Work shall be maintained during term of Contract and preserved for a period of three (3) years thereafter by CONTRACTOR for all laborers and mechanics working on the Work.

C. A Statement of Compliance, a letter signed and dated by party responsible for supervising the payment of persons employed by CONTRACTOR or subcontractor shall accompany payrolls required by Owner. The Statement of Compliance letter shall identify but is not limited to:

1. name of signatory party and title,
2. name of project, payroll period and
3. name of CONTRACTOR or Subcontractor.

The signed letter attests that the payroll complies with 29CFR issued by the Secretary of Labor.

D. Federal Funding

In the event that federal funding is used:

1. Contractor and all levels of Subcontractors shall submit weekly certified payroll reports and signed wage compliance statements to the Owner's designated office no later than seven (7) calendar days after the scheduled payday.

2. Contractors and all levels of Subcontractors shall pay all "mechanics and laborers" not less often than once per week, for work performed the previous week.

3. Submit to the Owner's designated office Standard Form 1413, Statement and Acknowledgement, from each subcontractor prior to the subcontractor performing work on the project.

V. Noncompliance

According to Chapter 2258 Texas Government Code Title 10A, a CONTRACTOR or subcontractor(s) who violates this section shall pay to the political subdivision on whose behalf the contract is made, $60 for each worker employed for each calendar day or part of the day that the worker is paid less than the wage rates stipulated in the contract. A public body shall use any money collected under this section to offset the costs incurred in the administration of this chapter.

Confirmed Disciplinary action taken by CONTRACTOR against employees who provide information during an interview or investigation by the Owner on wages received, may result in suspension or debarment from consideration of award of City contracts.

VI. Area Practice

A. Heavy and Highway Construction Rates shall be used on this Project, unless the Project consists primarily of Building Construction and Building Construction Rates are to be used.

1. Building Construction consists generally of all aspects of construction of buildings, which are sheltered enclosures with walk-in access for the purpose of housing persons, machinery, equipment or supplies, including without limitation the installation of utilities and equipment, both above and below grade level, as well as incidental demolition, grading, utilities, paving and other site work. Buildings need not be "habitable" to be classified as Building Construction and the installation of heavy machinery and/or equipment will not generally change a Building Construction project's classification.

2. The determination of Building Construction Wage Rates includes all construction trades and work necessary to complete a building, regardless of the number of contracts involved, so long as all such contracts are closely related in purpose, time and place.

B. For projects that involve both Building Construction and Heavy and Highway trades, the following classifications shall be used:

1. A multiple classification shall be used if Building Construction items are more than 20% of the Heavy and Highway project cost.

2. A multiple classification shall be used if Heavy and Highway Construction items are more than 20% of the Building Construction Project cost.

C. Split classifications/multiple wage rate schedules: When construction work requires that an employee perform work under multiple classifications or multiple wage scales, the employer must pay that worker (at least) the

highest prevailing wage or the employer payroll records must accurately set forth the times spent performing the work of each classification and under each scale. For those projects that involve both Building Construction and Heavy and Highway trades, the Heavy and Highway wage rates may only be applied to workers when engaged in site work at least five (5) feet beyond the building.

VII. Texas Open Records Act

Unless covered by an exception to mandatory disclosure under the Texas Public Information Act, Chapter 552, Texas Government Code, any and all documents submitted to the City of Austin become Public Records and are, therefore, subject to public disclosure.

Wage Rates For This Project Are Attached

End

WAGE RATE DETERMINATION

BUILDING CONSTRUCTION TYPE

COUNTY NAME : TRAVIS

Wages based on DOL Prevailing Wage Rate General Decision:TX160323 5/27/2016 TX323 and City of Austin Ordinance #20160324-015

DOL Rate column is for information only. The Total Minimum Wage Rate is derived from the Adjusted Wage Rate Required pursuant to City Ordinance plus the DOL Fringes and can be met using any combination of cash and non-cash qualified fringe benefits, provided the cash component is at least $13.03/hour.

CLASSIFICATION	DOL RATE for info only	ADJUSTED WAGE RATE REQUIRED pursuant to City Ordinance	DOL FRINGES	TOTAL MINIMUM WAGE RATE REQUIRED
Asbestos Worker/Heat & Frost Insulator (Duct, Pipe, and Mechanical System Insulation)	$ 21.57	$ 21.57	$ 10.02	$ 31.59
Boilermaker	$ 23.14	$ 23.14	$ 21.55	$ 44.69
Bricklayer	$ 20.07	$ 20.07	$ -	$ 20.07
Carpenter	$ 20.75	$ 20.75	$ 7.30	$ 28.05
Carpenter (Acoustical Ceiling Installation only)	$ 14.00	$ 14.00	$ -	$ 14.00
Carpenter (Form Work Only)	$ 15.62	$ 15.62	$ 0.05	$ 15.67
Cement Mason/Concrete Finisher	$ 15.71	$ 15.71	$ -	$ 15.71
Drywall Finisher/Taper	$ 17.06	$ 17.06	$ 4.43	$ 21.49
Drywall Hanger and Metal Stud Installer	$ 17.47	$ 17.47	$ 3.45	$ 20.92
Electrical Installer (Sound and Communication Systems, Excluding Wiring)	$ 18.00	$ 18.00	$ 2.30	$ 20.30
Electrician (Excludes Installation of Sound and Communication Systems)	$ 27.15	$ 27.15	$ 7.88	$ 35.03
Elevator Mechanic <5 years experience	$ 37.76	$ 37.76	$ 32.25	$ 70.01
Elevator Mechanic >5 years experience	$ 37.76	$ 37.76	$ 33.01	$ 70.77
Floor Layer (Carpet)	$ 21.88	$ 21.88	$ -	$ 21.88
Glazier	$ 12.83	$ 13.03	$ -	$ 13.03
HVAC Mechanic (HVAC Unit Installation Only)	$ 23.78	$ 23.78	$ 6.89	$ 30.67
Ironworker, Ornamental	$ 23.02	$ 23.02	$ 6.35	$ 29.37
Ironworker, Reinforcing	$ 12.27	$ 13.03	$ -	$ 13.03
Ironworker, Structural	$ 20.73	$ 20.73	$ 5.24	$ 25.97
*Lead Paint or Asbestos Abatement Worker	*	$ 13.03	$ -	$ 13.03
Laborer, Common or General	$ 11.44	$ 13.03	$ -	$ 13.03
Laborer, Mason Tender - Brick	$ 12.22	$ 13.03	$ -	$ 13.03
Laborer, Mason Tender - Cement/Concrete	$ 11.85	$ 13.03	$ -	$ 13.03
Laborer, Pipelayer	$ 12.45	$ 13.03	$ -	$ 13.03
Laborer, Roof Tearoff	$ 11.28	$ 13.03	$ -	$ 13.03

Operator, Backhoe/Excavator/Trackhoe	$ 19.43	$ 19.43	$ 3.49	$ 22.92
Operator, Bobcat/Skid Steer/Skid Loader	$ 13.00	$ 13.03	$ -	$ 13.03
Operator, Bulldozer	$ 14.00	$ 14.00	$ -	$ 14.00
Operator, Crane	$ 34.85	$ 34.85	$ 9.85	$ 44.70
Operator, Drill	$ 14.50	$ 14.50	$ -	$ 14.50
Operator, Forklift	$ 16.64	$ 16.64	$ 6.26	$ 22.90
Operator, Grader/Blade	$ 19.30	$ 19.30	$ -	$ 19.30
Operator, Loader	$ 14.00	$ 14.00	$ -	$ 14.00
Operator, Mechanic	$ 18.75	$ 18.75	$ 5.12	$ 23.87
Operator, Paver (Asphalt, Aggregate, and Concrete)	$ 16.03	$ 16.03	$ -	$ 16.03
Operator, Roller	$ 11.25	$ 13.03	$ -	$ 13.03
Painter (Brush, Roller, and Spray, Excludes Drywall Finishing/Taping)	$ 18.76	$ 18.76	$ 6.35	$ 25.11
Pipefitter (Including HVAC Pipe Installation)	$ 28.03	$ 28.03	$ 12.43	$ 40.46
Plumber, Excludes HVAC Pipe Installation	$ 23.57	$ 23.57	$ 6.37	$ 29.94
Roofer	$ 12.00	$ 13.03	$ -	$ 13.03
*Roofer, Metal	$ 14.05	$ 14.05	$ -	$ 14.05
Sheet Metal Worker (Including HVAC Duct Installation)	$ 24.38	$ 24.38	$ 13.74	$ 38.12
Sprinkler Fitter (Fire Sprinklers)	$ 27.43	$ 27.43	$ 22.52	$ 49.95
Tile Finisher	$ 11.32	$ 13.03	$ -	$ 13.03
Tile Setter	$ 16.35	$ 16.35	$ -	$ 16.35
Truck Driver, Dump Truck	$ 12.39	$ 13.03	$ 1.18	$ 14.21
Truck Driver, Flatbed Truck	$ 19.65	$ 19.65	$ 8.57	$ 28.22
Truck Driver, Semi-Trailer Truck	$ 12.50	$ 13.03	$ -	$ 13.03
Truck Driver, Water Truck	$ 12.00	$ 13.03	$ 4.11	$ 17.14
Waterproofer	$ 16.30	$ 16.30	$ 0.06	$ 16.36

http://www.wdol.gov/wdol/scafiles/davisbacon/tx.html

See below for Additional Wage Information.

Note: *Lead Paint & Asbestos Abatement and Roofer, Metal Classifications have been added to this Prevailing Wage Rate Determination pursuant to a City of Austin Prevailing Wage Survey (trades absent from DOL).

The Wage Compliance information detailed below was excerpted from DOL General Decision TX160323 or other sources.

1. **Additional Trade information:**

Electricians** - Including low voltage wiring for computers, fire/smoke alarms.
Elevator Mechanics*** - also must be paid for 7 holidays - New Years Day, Memorial Day, Independence Day, Labor Day, Thanksgiving Day, the Friday after Thanksgiving Day, Christmas Day, and Veterans Day.
Welders - Receive rate prescribed for craft performing operation to which welding is incidental.

Unlisted classifications needed for work not included within the scope of the classifications listed may be added upon the advance approval of City of Austin Contract Administration. CONTRACTOR shall submit to City of Austin Contract Administration for review the classification, a bona fide definition of work to be performed and a proposed wage with sample payrolls conforming to area practice **prior** to the start of the job for that type of work.

2. **Wages**

The Total Wage may be met by any combination of cash wages and credible "bona fide" fringe benefits paid for by the employer. Overtime wages must be calculated using the Adjusted Wage Rate specified in the Wage Rate Determination or the actual basic rate of pay, whichever is higher.

City of Austin Ordinance No. 20160324-015 requires that construction workers are paid a Minimum Wage of at least $13.03/hour. The cash portion of their compensation must meet or exceed this amount.

3. **Crediting fringe benefit contributions to meet DBA/DBRA and City of Austin requirements:**

The Davis-Bacon Act (and 29 CFR 5.23), list fringe benefits to be considered. Examples are:

> Life Insurance
> Health Insurance
> Pension
> Vacation
> Holidays
> Sick Leave

Note: The use of a truck is not a fringe benefit; a Thanksgiving turkey or Christmas bonus is not a fringe benefit. No credit may be taken for any benefit required by federal, state, or local law such as: workers compensation, unemployment compensation; or social security contributions.

Contributions to fringe benefit plans must be made regularly, e.g. daily, weekly, etc. They must be more frequent than quarterly. (see 29 CFR 5.5 (a)(1)(I)) A periodic bonus may not be counted as a fringe benefit.

4. Annualization of Benefit Costs

If a firm provides an electrician with $200 per month medical insurance, to calculate allowable fringe benefit credit contributions per hour, the formula ([$200 x 12 months] divided by 2080 hours = $1.15 per hour) should be used.

5. Proper Designation of Trade

A work classification on the wage decision for each worker must be made based on the actual type of work he/she performed and each worker must be paid no less than the wage rate on the wage decision for that classification **regardless** of his or her level of skill.

6. Split Classification

If a firm has employees that perform work in more than one classification, it can pay the wage rates specified for each classification ONLY if it maintains accurate time records showing the amount of time spent in each classification. If accurate time records are not maintained, these employees must be paid the highest wage rate of all the classifications of work performed by each worker. Accurate time records tracking how many hours a worker performed the work of one trade and then switched to another trade must be accounted for on a daily basis and reflected on Employer Certified Payroll accordingly.

WELDERS - Receive rate prescribed for craft performing operation to which welding is incidental.

==========

Unlisted classifications needed for work not included within the scope of the classifications listed may be added after award only as provided in the labor standards contract clauses (29CFR 5.5 (a) (1) (ii)).

In the listing above, the "SU" designation means that rates listed under the identifier do not reflect collectively bargained wage and fringe benefit rates. Other designations indicate unions whose rates have been determined to be prevailing.

WAGE DETERMINATION APPEALS PROCESS

1.) Has there been an initial decision in the matter? This can be:

* an existing published wage determination
* a survey underlying a wage determination
* a Wage and Hour Division letter setting forth a position on a wage determination matter
* a conformance (additional classification and rate) ruling

On survey related matters, initial contact, including requests for summaries of surveys, should be with the Wage and Hour Regional Office for the area in which the survey was conducted because those Regional Offices have responsibility for the Davis-Bacon survey program. If the response from this initial

contact is not satisfactory, then the process described in 2.) and 3.) should be followed.

With regard to any other matter not yet ripe for the formal process described here, initial contact should be with the Branch of Construction Wage Determinations. Write to:

Branch of Construction Wage Determinations
Wage and Hour Division
U.S. Department of Labor
200 Constitution Avenue, N.W.
Washington, DC 20210

2.) If the answer to the question in 1.) is yes, then an interested party (those affected by the action) can request review and reconsideration from the Wage and Hour Administrator (See 29 CFR Part 1.8 and 29 CFR Part 7). Write to:

Wage and Hour Administrator
U.S. Department of Labor
200 Constitution Avenue, N.W.
Washington, DC 20210

The request should be accompanied by a full statement of the interested party's position and by any information (wage payment data, project description, area practice material, etc.) that the requestor considers relevant to the issue.

3.) If the decision of the Administrator is not favorable, an interested party may appeal directly to the Administrative Review Board (formerly the Wage Appeals Board). Write to:

Administrative Review Board
U.S. Department of Labor
200 Constitution Avenue, N.W.
Washington, DC 20210

4.) All decisions by the Administrative Review Board are final.

==========

Notice to Bidders: This form, Addendum – Section 00900, is included for your information only. If an actual Addendum is issued for this project, the format shown below will be used.

ADDENDUM No. _____

Date _____, _____

City of Austin

Project Name Bus Shelter Improvements_____

C.I.P. No. 6001.107_____ IFB No.: CLMC 622_____

This Addendum forms a part of the Contract and corrects or modifies original Bid Documents, dated _(*first advertisement date should go here)*_, _____. Acknowledge receipt of this addendum in space provided on bid form. Failure to do so may subject bidder to disqualification.

A. Project Manual Revisions:

B. Drawing Revisions:

This addendum consists of _____ page(s)/sheet(s).

_____

Approved by OWNER

_____

Approved by ENGINEER/ARCHITECT

END

SAMPLE

PART 1 - GENERAL

1.1 RELATED DOCUMENTS:

Drawings and general provisions of Contract, including General Conditions, Section 00700, and Supplemental General Conditions, Section 00810, and Division 1 requirements.

1.2 DESCRIPTION OF WORK:

The Work of this Contract includes sustainability requirements as shown in the Division 1 Section 01352 and/or 01505 and all other applicable specification sections. It is the intent of the Owner to work in partnership with the Contractor in implementing sustainable construction practices to the greatest extent possible.

The work of this contract comprises of erecting a steel structure to serve as a bus shelter. Specific work elements include, but are not limited to the following: removal of existing sidewalk pavement, construction of drilled pier and spread footings, installation of acrylic panels, installation of conduit runs for electrical and communication cables, installation of LED lighting on the structure, installation of a touch screen monitor, installation of electrical outlets, installation of lighting communication, installation of benches and lean bars.

Contract documents indicate the Work of the contract and related requirements and conditions.

The Work includes, briefly and without force and effect upon the documents, construction of curb ramps, meeting all ADA requirements, removing and relocating utilities as shown in construction drawings.

1.3 SUBMITTALS

Provide shop drawings and other information as required by Section 01300 for coordination of the work.

1.4 CONTRACTOR'S USE OF CONSTRUCTION SITE

The construction site will be in use by public throughout the duration of contract. The CONTRACTOR shall refer to Section 01041, Coordination Requirements for Airport Construction Work for coordination required to minimize disturbance and hazards to pedestrian as well as automobile traffic. CONTRACTOR shall not unreasonably encumber the construction site with materials or equipment. CONTRACTOR shall assume reasonable responsibility for protection of construction site.

PART 2 - PRODUCTS

NOT USED

PART 3 - EXECUTION

NOT USED

End

PART 1 - GENERAL

1.1 RELATED DOCUMENTS

A. Drawings and general provisions of the Contract, including General and Supplementary Conditions and other Division 01 Specification Sections, apply to this Section.

1.2 SUMMARY

A. Section includes administrative and procedural requirements necessary to prepare and process Applications for Payment.

B. Related Requirements:

1. Section 01300 "Submittals" for submittal requirements
2. Section 01505 "Construction and Demolition Waste Management" for administrative requirements governing waste management construction requirements.

1.3 DEFINITIONS

A. Schedule of Values: A statement furnished by Contractor allocating portions of the Contract Sum to various portions of the Work and used as the basis for reviewing Contractor's Applications for Payment.

1.4 MEASUREMENT AND PAYMENT

A. There will be no separate measurement or payment to perform all work required for construction of the Project in accordance with the Project Manual, Drawings and Addenda, but shall be measured and paid for as a lump sum bid price for the project. This includes all labor, permits, material, machinery, tools, supplies and equipment, and incidentals necessary to complete the project.

1.5 SCHEDULE OF VALUES

A. Coordination: Coordinate preparation of the schedule of values with preparation of items in Section 00700 "General Conditions", 2.4.2.

1. Coordinate line items in the schedule of values with other required administrative forms and schedules, including the following, but not limited to:

   a. Application for Payment forms with continuation sheets.
   b. Submittal schedule.
   c. Items required to be indicated as separate activities in Contractor's

construction schedule.

2. Submit the schedule of values to E/A at earliest possible date, but no later than five (5) working days before the date scheduled for the preconstruction conference.

3. Subschedules for Phased Work: Where the Work is separated into phases requiring separately phased payments, provide subschedules showing values coordinated with each phase of payment.

B. Format and Content: Use Project Manual table of contents as a guide to establish line items for the schedule of values. Provide at least one line item for each Specification Section.

1. Identification: Include the following Project identification on the schedule of values:

   a. Project name and location.

   b. Name of E/A.

   c. Name of Owner

   d. Owner’s project number.

   e. Contractor's name and address.

   f. Date of submittal.

2. Arrange schedule of values consistent with format of AIA Document G703.

3. Provide a breakdown of the Contract Sum in enough detail to facilitate continued evaluation of Applications for Payment and progress reports. Coordinate with Project Manual table of contents. Provide multiple line items for principal subcontract amounts in excess of five percent of the Contract Sum.

4. Provide a separate line item in the schedule of values for each part of the Work where Applications for Payment may include materials or equipment purchased or fabricated and stored, but not yet installed.

   a. Differentiate between items stored on-site and items stored off-site. If required, include evidence of insurance.

5. Provide separate line items in the schedule of values for initial cost of materials, for each subsequent stage of completion, and for total installed value of that part of the Work.

6. Each item in the schedule of values and Applications for Payment shall be complete. Include total cost and proportionate share of general overhead and profit for each item.

   a. Temporary facilities and other major cost items that are not direct cost of actual work-in-place may be shown either as separate line items in the schedule of values or distributed as general overhead expense, at Contractor's option.

7. Schedule Updating: Update and resubmit the schedule of values before the next Applications for Payment when Change Orders or Construction Change Directives result in a change in the Contract Sum.

1.6 APPLICATIONS FOR PROGRESS PAYMENT

A. Each Application for Payment following the initial Application for Payment shall be

consistent with previous applications and payments as certified by E/A and paid for by Owner.

1. Initial Application for Payment, and final Application for Payment involve additional requirements.

B. Payment Application Times: Refer to Section 00700 “General Conditions”, 14.1.1.

C. Application for Payment Forms: Use AIA Document G702 and AIA Document G703 as form for Applications for Payment.

D. Application Preparation: Complete every entry on form. Notarize and execute by a person authorized to sign legal documents on behalf of Contractor. E/A will return incomplete applications without action.

1. Entries shall match data on the schedule of values and Contractor's construction schedule. Use updated schedules if revisions were made.

2. Include amounts for work completed following previous Application for Payment, whether or not payment has been received. Include only amounts for work completed at time of Application for Payment.

3. Indicate separate amounts for work being carried out under Owner-requested project acceleration.

E. Stored Materials: Refer to Section 00700 “General Conditions”, 14.1.4.

F. Transmittal: Submit three signed and notarized original copies of each Application for Payment to E/A by a method ensuring receipt within 24 hours. One copy shall include waivers of lien and similar attachments if required.

1. Transmit each copy with a transmittal form listing attachments and recording appropriate information about application.

G. Initial Application for Payment: Administrative actions and submittals that must precede or coincide with submittal of first Application for Payment include, but not limited, to the following:

1. List of subcontractors.

2. Schedule of values.

3. Contractor's construction schedule.

4. Submittal schedule.

5. List of Contractor's staff assignments.

6. List of Contractor's principal consultants.

7. Copies of building permits.

8. Copies of authorizations and licenses from authorities having jurisdiction for performance of the Work.

H. Final Application for Payment: After completing Project closeout requirements, submit final Application for Payment with releases and supporting documentation not previously submitted and accepted, including, but not limited, to the following:

1. Evidence of completion of Project closeout requirements.

2. AIA Document G706, "Contractor's Affidavit of Payment of Debts and Claims."

3. AIA Document G706A, "Contractor's Affidavit of Release of Liens."
4. AIA Document G707, "Consent of Surety to Final Payment."

PART 2 - PRODUCTS (NOT USED)

PART 3 - EXECUTION (NOT USED)

END OF SECTION 01025

PART 1 - GENERAL

1.1 SUMMARY

A. This specification section includes City of Austin Aviation Department requirements for coordinating project installation and construction work at Austin-Bergstrom International Airport, including but not limited to, the following:

1. Project installation or construction work coordination
2. Construction work restrictions

B. Work provisions noted in this specification are applicable to both City and Tenant contractors doing work at ABIA.

C. Contractors shall provide the specified work in a manner to minimize disruptions to airport operations, occupants, tenants and DoA staff, as well as protect airport facilities and environment.

D. There are many specified terms in City of Austin construction contracts through which the Owner can seek compensation or direct work changes to achieve requirements noted above, including but not limited to, the following Specification Section 00700, General Conditions provisions:

ARTICLE 6 -CONTRACTOR'S RESPONSIBILITIES
Paragraph 6.1 - Supervision and Superintendent
Paragraph 6.2 - Labor material and Equipment
Paragraph 6.4 - Concerning Sub-Contractors, Suppliers and Others
Paragraph 6.9 - Use of Premises

ARTICLE 7 -OTHER WORK
Paragraphs 7.2 and 7.5

ARTICLE 8 -OWNER'S RESPONSIBILITIES
Paragraph 8.6 - Notice of Claim

ARTICLE 13 -TESTS AND INSPECTIONS; CORRECTION, REMOVAL OR ACCEPTANCE OF DEFECTIVE WORK
Paragraph 13.6 - Correction or Removal of Defective Work

ARTICLE 14 -PAYMENTS TO CONTRACTOR AND COMPLETION
Paragraph 14.4 - Decision to Withhold Payment

1.2 DEFINITIONS AND REFERENCES

A. General: In this specification, the DoA is defined as the City of Austin Aviation Department Project Representative. ABIA and/or the Airport are defined as the Austin-Bergstrom International Airport. Owner is defined as the City of Austin Department of Aviation. Terminal is defined as the ABIA Passenger Terminal Facility.

B. FAA Advisory Circulars: FAA NCs referenced in this specification can be found at www.faa.gov web page, as required.

C. Barricade: A portable barricade, temporarily placed, constructed of materials which are sturdy and effective at preventing the public from accidentally entering the construction or storage site location, typically constructed in a sawhorse configuration.

D. Temporary Partition Walls: As approved by the Owner, temporary partition walls shall be installed as specified or where needed to isolate work areas from the public in accordance with the following:

1. Partition walls shall be sturdy and not easily moved by the public. Walls shall be weighted as necessary so as not to require attachment to floors for stability.

2. Partition walls shall be constructed of timber studs with Masonite or plywood sheathing. Sheathing exposed to the public shall be painted as follows:

a. Interior concourse level: flat white.

b. Interior baggage level: flat gray.

c. Exterior: dark green.

d. Color(s) shall be submitted to and approved by the Owner.

3. Doors in partition walls, as required to access construction areas, shall be sturdy, lockable and painted to match partition walls.

4. The Owner may install, or require the contractor to install, signage and/or artwork on the temporary partition walls as deemed appropriate. If directed, the contractor shall install as directed by the Owner.

5. Refer to Attachment 02, Temporary Partition Walls, for details not indicated herein.

E. Fit/Form: Bearing a visual and aesthetic resemblance to adjacent surfaces, in order to maintain a uniform look.

F. Tele-Communication (Tcom) Rooms: Rooms requiring special secured access containing airport telephone-communications-data equipment.

1.3 PROJECT COORDINATION REQUIREMENTS

A. General: Contractor shall coordinate installation of the specified work to ensure an efficient and orderly installation in a manner acceptable to the DoA.

B. Security: Contractor installation work and site access shall adhere to requirements of project Specification Section 01555 - Airport Security Program and shall be as approved by the DoA. Contractor shall also abide by requirements noted in Attachments 03 – Contractor Parking Program for Work at ABIA and 04 – Contractor Tool Management and Delivery Program at ABIA.

C. Occupied Spaces: Unless specified otherwise, DoA will occupy any work site building and site during construction. Contractor shall allow for occupancy of site and use by the public.

D. Airport Operation: Contractor shall coordinate the work with the DoA to minimize disruption to airport operations. Work shall be provided in a manner acceptable to the DoA to allow the airport to operate.

E. Airport Disruptions: Contractor shall identify any known airport areas and/or operations that work activities may affect, including but not limited to: baggage handling, ticket counters, checkpoints, tenants, vendors, access, movement, utilities, HVAC, etc.

F. PDF File Requirements: All project submittals, transmittals and/or close-out documents shall be provided as specified and shall additionally be provided to the DoA in PDF file format and in a manner acceptable to the DoA. This includes but is not limited to: Submittals, Request for Information, Pay Requests, O&M Manuals, Project Schedules, Proposed Change Orders, etc.

1.4 GENERAL WORK COORDINATION AND RESTRICTIONS

A. Airport Construction Work: Project construction work shall adhere to requirements noted in FAA Advisory Circular 150/5370, latest edition.

B. Work Site: Confine work to area(s) specified and/or shown on drawings. Do not disturb portions of airport facilities beyond specified work areas. Contractor access to work site shall be as specified and approved by the DoA. If Contractor seeks alternate access, proposed route(s) shall be submitted for DoA approval at least three working days prior to proposed access.

C. Structural Limitations: As required by the DoA, there may be a need for submittal of an evaluation by a Professional Engineer as a quality assurance measure to avoid any structural damage to DoA facilities due to exceeding existing structural limitations.

D. Floor Structure: Much of the Terminal Concourse Level floor is terrazzo on concrete metal pan floor is designed to support 100 psf with maximum concentrated load of 2000 Ibs. Terminal Baggage Level is slab on grade and should be able to support greater loads than the Concourse Level.

E. Construction Equipment: Any proposed use of cranes, lifts, vehicles, equipment or material deliveries or similar processes that will transport loads within DoA facilities shall require submittal of Work Plan information for DoA review and approval.
- As approved by the Owner, contractors shall utilize carts and/or vehicles with rubber wheels whenever there is a possibility of damaging existing floors or floor surfaces in City facilities.
- Equipment height and weight shall be compliant with limitations for use in existing conditions

F. Equipment Storage: Construction equipment shall be properly stored when not in use in a manner approved by the DoA. Equipment shall have floor protection measures when not in use, such as drip pans, absorbent pads and/or masonite panels.

G. Equipment Use: Construction equipment shall not be fueled inside airport buildings including the Terminal Building Tug Road. Combustion engine equipment discharges planned for use in and/or around ABIA buildings shall be equipped with scrubber devices adequate to control emissions of harmful or noxious fumes into occupied areas, as approved by the Owner. Contractor shall be responsible for environmental monitoring of equipment emissions to insure acceptable air quality at work site, as required by the DoA.

H. Lighting: Contractor shall provide temporary lighting with local switching for needed illumination of work site and/or as needed for traffic control.

1.5 WORK PLANNING REQUIREMENTS

A. Contacts: Contractor shall submit names of all Contractors representatives and/or sub-Contractor personnel involved in the work and contact phone number of work supervisor, superintendent and/or personnel in-charge for DoA information and files.

B. Existing Conditions: Prior to start of any Contractor work activities, Contractor and DoA representatives shall visit work sites and create a photographic journal of existing conditions to avoid later claims that Contractor activities damaged work sites or existing conditions.

C. Existing Facilities: Any existing mechanical doors, motors and/or other equipment in work site shall also be verified to be working properly prior to start of the work. As directed by the DoA, existing work site mechanical air filters or similar items shall be changed or maintained by the Contractor to protect DoA equipment during construction work.

D. Work Schedule: Contractor shall submit a Work Schedule as specified and acceptable to the DoA, along with specified updates. Work Schedule shall include a description of work items, work hours and work START/STOP dates, as acceptable to the DoA.

E. Look Ahead Schedule: Contractor shall submit a two-week Look Ahead Work Schedule at project meetings or as required by the DoA. Submittal shall be in a format acceptable to the DoA and shall note the date & time work activities will be started and completed, including cleanup, waste haul and/or other details required by the DoA to understand planned activities and impact to airport operations.

F. Work Plans: As required by the DoA, Contractor shall submit Work Plans for each distinct project activity for DoA review and approval.

- Work Plans shall be submitted a minimum of three working days in advance of the proposed work activities or the work may be stopped or delayed by the DoA at contractor expense for failure to allow time for the work to be coordinated with airport activities.
- Work Plan shall include provisions for maintaining space air conditioning necessary for proper operations of electronic devises and/or to insure comfortable conditions in spaces that may be affected by the planned work.
- Contractor shall provide a description and/or sketch of the location where the work will occur.

- Work sketches shall include, but are not limited to pedestrian and vehicular traffic flow plans, delivery and staging area and barricade plans.

G. Work Coordination: Project trade and/or building systems work shall be coordinated with the DoA to avoid conflicts and to ensure orderly and coordinated progress of the Work. This will also help insure accessibility into secure or restricted work areas.

H. Restricted Access Spaces: Any planned work in airport Tcom Rooms and/or other restricted access areas shall require a work escort. Access and escort shall be coordinated with DoA at least three working days prior to needed access.

I. Tcom Rooms: Unless specifically noted otherwise, contractor access to airport Tcom Rooms shall require escort by DoA staff. Contractor shall submit specified Work Plan information for any proposed site visit or work in Tcom Rooms at least three working days prior to requested access. Work Plan shall include provisions for maintaining space air conditioning necessary for proper operations of electronic devises in Tcom Rooms.

J. Mech-Elect Rooms: Proposed work dates and times in Mechanical and/or Electrical rooms shall be submitted for approval by the DoA at least three working days prior to requested access. Contractor access to these rooms without an escort shall be as permitted by the DoA.

1.6 WORK SITE PROTECTION AND DAMAGE REPAIRS

A. Facility Protection: Contractor shall provide means to protect existing building finishes, materials, grounds, structures and/or systems, as required and acceptable to the DoA.
- Contractor shall maintain existing building in a watertight condition throughout construction period and protect the building and its occupants for work duration.
- Contractor shall be responsible for cost of correction of damages to airport property due to actions of work site personnel.
- Contractor shall make arrangements acceptable to the DoA for scope, schedule and costs of repairs needed to repair contractor damages.

B. Barricades and Walls: DoA requires submittal any plans for barricades or temporary walls to coordinate with airport activities. Barricades and/or temporary walled partitions shall be provided as specified and/or required by the DoA.
- At least three working days prior to proposed installation, contractor shall submit a barricade plan which clearly indicates type, placement and construction method of barricades and/or temporary walled partitions proposed to be erected, including paint colors. Barricade plan shall include directional and informational signage as required by the DoA.
- Signs, barricades, and warning devices informing site occupants of construction will be placed and maintained by the Contractor. Unless approved otherwise, road cones and caution tape are not acceptable barricading methods for construction work at ABIA facilities.
- Contractor shall submit and provide weekly updates to work schedule indicating installation and removal dates of any temporary walls and/or barricades.
- Barricades and temporary walled partitions within and adjacent to the ABIA Terminal shall be Fit/Form.
- Contractor shall be responsible for maintaining barricades and temporary walled partitions in tidy, clean and good condition, as determined by the DoA.

- Barricades constructed with 2x4 wood studs shall be as shown on barricade drawing attached at the end of this section and placed, as a minimum, as specified or shown on Drawings.
- Proposed barricade areas within the ABIA Terminal shall be as submitted and approved by the DoA.
- Unless specified otherwise, barricades shall be set-up prior to beginning of the daily work and then taken down at the finish of the daily work.
- Contractor shall remove barricades and temporary walled partitions promptly when their' service has ended and no later than Substantial Completion.

C. Work Confinement: Work areas shall be properly sealed-off or isolated in a pro-active manner to confine construction dust and debris to the workspace. Contractor shall exercise precautions necessary to prevent dust from work site from entering DoA buildings, HVAC systems and/or aircraft. As approved or required by the DoA, contractor shall provide dust control measures. Noise levels near public areas shall be kept below 70 db and/or at a level acceptable to the Owner

D. Order and Protection: Contractor shall not encumber the work site with materials or equipment. Contractor shall be responsible for protection of work site storage of equipment and materials.
- Contractor is responsible for providing necessary provisions to address contractor work area or temporary facilities life safety and security needs, as approved by the DoA.
- Any work site provisions needed during construction shall adhere to requirements of the Airport Security Program, as determined by the Owner.

E. Entry Area Protection: For work in the ABIA Terminal, Contractor shall protect entry vestibules from damage during delivery of materials or equipment by removing existing floor cover grating and temporarily replacing with 3/4" plywood, as approved by the DoA.

F. Floor Protection: Whenever equipment is brought into the ABIA buildings, Contractor shall provide appropriate protective measures, such as use of masonite or other materials, to protect entry vestibules and/or building floors. As approved by the Owner, contractors shall utilize carts and/or vehicles with rubber wheels whenever there is a possibility of damaging existing floors or floor surfaces in DoA facilities.

1.7 EXTERIOR WORK SITE PROTECTION AND REQUIREMENTS

A. Driveways and Entrances: Keep driveways and entrances serving premises clear and available to DoA, building occupants and emergency vehicles at all times. Do not use these areas for parking or storage.

B. Traffic: As approved by the DoA, Contractor shall employ measures noted in the latest edition of the "Texas Manual on Uniform Traffic Control Devices" for work in and around the airport roadway systems. Latest TMUTCD document can be obtained at www.txdot.gov web page.

C. Facility Protection: Contractor shall protect, shore, brace, support and/or maintain all underground pipes conduits, drains, structural features and other concealed construction uncovered or otherwise affected by the Contractor's operations.
- Pavement, surfacing, driveways, curbs, walks, buildings, utility poles, guy wires, fences, and other surface structures affected by construction operations, together

with all sod and shrubs in landscaped areas, shall be restored to their original condition. All replacements shall be made with new materials.

D. Site/Grounds Work: Proposed road obstructions shall be submitted for approval of the DoA.
- All open trenches and other excavations shall have suitable barricades, signs, and lights to provide adequate protection to the public, tenants, and City employees.
- Obstructions, such as material piles and equipment shall be provided with similar warning signs and lights.
- Exterior barricades/obstructions shall be illuminated with warning lights from sunset to sunrise.
- Material storage/work in or near roadways shall minimally obstruct or inconvenience to the public, whether vehicular or pedestrian, as approved by the DoA.
- All ground protection measures will be securely fastened to avoid becoming trash, flying object debris hazards or projectiles.

E. Landscape Work: No trees shall be removed by the Contractor except as specified and/or authorized by the DoA.
- Tree and vegetation shall be removed and properly disposed of by the Contractor. Trees and plants not removed shall be protected against injury from construction operations.
- Hand excavations shall be employed as necessary to prevent injury to trees. Care shall be taken with exposed roots, unearthed during construction, so that roots do not de-hydrate causing tree damage.
- Contractor shall take measures to protect trees designated to be preserved.

F. Storm Water Quality: Contractor shall observe the requirements and regulations of authorities having jurisdiction prohibiting the pollution of any lake, stream, river, or wetland by the dumping of any refuse, rubbish, dredge material, or debris therein.

1.8 WORK TIME COORDINATION AND RESTRICTIONS

A. Work Days: Unless specified or approved otherwise by the DoA, project work days shall be MONDAY thru FRIDAY.

B. Work Hours: Unless specified or approved otherwise by the DoA, project work hours shall be between 10pm and 5am in and around the Terminal.

C. Access: Unless approved otherwise by the DoA, work which will impair public access to and/or within the ABIA Terminal shall be performed between the hours of 10pm and 5am.

D. Disturbances: Unless approved otherwise by the DoA, high level noise, equipment exhaust, and dust associated with construction work such as, but not limited to, concrete slab saw cutting, pier drilling and demolition shall be performed between 10pm and 5am.

E. Special Events/Holiday Shut-Down Period: Unless specified or approved otherwise by the DoA, contractor shall not be permitted to work during the following significant special events/holiday periods, as specifically identified by the DoA:

MARCH: 15 Calendar Days around Spring Break holidays
NOVEMBER: 15 Calendar Days around Thanksgiving holidays
DECEMBER-JANUARY: 15 Calendar Days around Christmas and New Year holidays

F. Emergency Shut-Down by DoA: In the event of an emergency, the DoA may prohibit Contractor's use of the site, either partially or completely.
   - Under such circumstances, the Contractor shall follow the DoA's instructions and immediately cease operations and immediately evacuate personnel as required and instructed by the DoA but not prior to ensuring that the Contractor's operations cease and do not pose a hazard if the Work area is left unattended for an extended period of time.

1.9 MISCELLANEOUS WORK RESTRICTIONS AND REQUIREMENTS

A. Fumes: No hazardous or foul odors shall be emitted from the construction site as a result of the Contractor's operations.

B. Work in Elevated Areas: When working over occupied spaces, Contractor shall provide netting, tethering, lanyards, and/or other provisions necessary to prevent items from falling/injuring occupants or damaging the facility. As required, Contractor shall submit proposed safety provisions for DoA review.

C. Material Safety Data Sheets: As specified or required by the DoA, Contractor shall provide material safety data sheets (MSDSs) for hazardous materials stored at the ABIA at least three working days prior to proposed material storage.

D. Baggage Handling System (BHS) Work Area Training: As determined by the DoA, personnel that will be working in and around the ABIA Terminal BHS shall attend 1 hour of BHS Safety Training prior to being granted access to work areas.
   - As determined by the DoA, BHS work area training shall be in groups appropriate to the total number of workers requiring the training.
   - Training shall occur at date and time acceptable to the DoA to reduce possibility of BHS disruptions and/or work site accidents.

E. Owner Signs: DoA may provide informational or directional signs for Contractor use during construction. DoA may mount signs or posters on temporary walled partitions walls for informational or aesthetic purposes.

F. Power Cords: If power/utility cords are required to be placed on a publicly accessible floor location, runs shall be securely fastened with sturdy tape a minimum of 2-1/2" in width and shall be continually monitored to avoid become a tripping hazard.
   - Cord shall be immediately removed at end of shift or when now longer in use.
   - Provide waterproof connectors to connect separate lengths of electrical power cords if single lengths will not reach areas where construction activities are in progress.
   - Do not exceed safe length-voltage ratios.

G. Hazards: Contractor shall NOT be permitted to leave extension cords, access planks or other items in work areas during the Contractor's non-work hours, unless approved otherwise by the DoA.

H. Electrical Spikes: Re-start or switchover to/from emergency power to normal power can cause damaging spikes in electrical circuits, so work of this type shall be coordinated with the DoA.

1.10 CONTRACTOR PARKING AND STAGING PROVISIONS

A. Coordination: Contractor staging/employee parking areas shall be as specified or as approved by the DoA.
- If Contractor proposes a staging/parking at other than specified locations, proposed location(s) shall be submitted for DoA approval at least five working days prior to proposed staging.

B. Staging: Contractor is responsible to ensure that work material and equipment is adequately and properly isolated to protect site occupants.
- Contractor is responsible for the security of material and equipment storage.
- Any proposed temporary fence at airport staging areas shall be submitted for DoA approval.
- Stored materials and equipment shall not be accessible to the public and shall be marked to clearly identify its owner and the project name.

C. Access: Contractor shall provide the airport security personnel a means to access work sites and/or staging areas for emergency purposes.

D. Work Site Office: As specified, Contractor shall provide office at or near the site of the Work which shall be the headquarters of the Project Superintendent.
- Any communication given to the superintendent or delivered to Contractor's work site office in the absence of Project Superintendent shall be deemed to have been delivered to Contractor.
- As required, Contractor shall make necessary arrangements and pay installation charges for electrical/telephone service and lines at work site office and shall provide all electrical/telephone instruments.

E. Restrooms: Contractor use of existing sanitary facilities (restrooms) shall be as specified and approved by the DoA. Contractor personnel shall maintain a reasonable level of cleanliness in DoA facilities or risk loss of access to DoA restrooms and/or facilities.

F. Interaction with Occupants: Contractor personnel interaction with work site occupants shall be reasonable and respectful. Violations or unacceptable behavior shall require the Contractor to remove non-compliant work personnel from the project.

G. Parking: Contractor shall not park a vehicle or allow a vehicle to remain stopped within the Airport site except in such areas and for such periods of time as approved by DoA.
- Contractor shall not park a vehicle or allow a vehicle to remain stopped within the airport contrary to authorized signs, pavement markings or other traffic control devices.
- Contractor shall not park or allow a vehicle to remain stopped within the airport site on any shoulder (unless disabled) or in front of any driveway.
- Vehicles also cannot park on any roadway or within a bus stop or taxicab zone (unless authorized to use such areas by the DoA).

- Vehicles cannot park within fifteen(15) feet of a fire hydrant or ten (10) feet of any airport perimeter security fence.
- Failure to comply with any of noted or specified parking requirements may cause Contractor's vehicular access to the airport to be restricted or revoked.

H. Terminal Area Parking: Parking by the Contractor at and around ABIA Terminal is not permitted unless authorized in writing by the DoA.
- Parking at or around the ABIA Terminal shall adhere to requirements of the ABIA Security Program.
- Parked vehicles shall have the Contractor's logo affixed to the side of the vehicle or placed on the dash of the vehicle, as approved by the DoA.
- Contractor shall notify the on-duty Transportation Security representative to indicate arrival at approved parking location at or around the ABIA Terminal.
- Transportation Security representative shall inspect the vehicle and apply a distinctive sticker to the vehicle window for the parked vehicle to indicate that the vehicle has been inspected and authorized to be parked at that location.
- Contractor vehicle operator shall not leave the vehicle prior to security inspection.
- If a security representative discovers a Contractor vehicle parked curbside at the ABIA Terminal without an operator at the vehicle, they may issue a parking citation and have the vehicle towed at the Contractor's expense, without notice.

1.11 DELIVERIES

A. Deliveries: All project deliveries shall be coordinated and approved by the DoA. Material or equipment drop-off at and around the ABIA Terminal shall adhere to requirements of the ABIA Security Program, including but not limited to, the following.
- Contractor shall coordinate project deliveries with the DoA, including obtaining DoA approval of delivery sequencing and contractor responsibilities.
- Requests to park curbside for deliveries shall be submitted for DoA approval at least three working days prior to planned delivery. Failure to comply with required notification will subject delivery to be prohibited by the DoA.
- Deliveries shall minimize space and time requirements for storage of materials and equipment at work site or delivery areas.
- Curbside parking for deliveries to the ABIA Terminal shall be for a maximum of one hour unless approved otherwise, in writing by the DoA.
- Materials and equipment to be off-loaded shall be timed to arrive not more than 30 minutes after the scheduled time. If delivery has not occurred within allowed time, DoA approval of delivery will be subject to being cancelled with delivery re-scheduled for another date.

1.12 UTILITIES

A. Utility Disruptions: All planned or required project utility disruptions shall be as approved by the DoA.
- Contractor shall submit Work Plan for utility disruptions a minimum of five working days prior to planned disruptions. Unless specified or approved otherwise in writing by the DoA, Contractor shall not disrupt any utilities from 5am to 10pm.
- When applicable, contractor shall coordinate utility disruptions with the DoA and utility company/provider.

B. Water: Use of available work site water shall be as specified and/or approved by the DoA. In general, Contractor may use water at Terminal building work sites, unless specified otherwise.

C. Electrical: Use of work site electrical power shall be as specified and/or approved by the DoA. Contractor use of existing electrical power at Terminal Building shall be as specified and/or approved by the DoA.

1.13 FIRE PROTECTION WORK

A. Existing Conditions: Renovation work shall be coordinated and integrated with the existing building fire alarm systems and fire sprinkler systems, as specified and/or required. SimplexGrinnell fire protection system is in place at the ABIA Terminal Building.

B. Hot Work and Fire Alarm-Sprinkler Impairment Permits: To help avoid nuisance trips of the airport fire protection systems due to Contractor work activities, contractor shall abide by requirements the DoA Hot Work and Fire Alarm-Sprinkler Impairment programs, as specified.

C. Approved Shop Drawings: If project work requires approval of fire protection system shop drawings, contractor shall provide the DoA a minimum of three copies of approved Shop Drawings approved by authorities having jurisdiction for as-built record purposes.

D. Shop Drawings: If the magnitude of fire protection work or changes do not require submittal and/or approval of Shop Drawings by authorities having jurisdiction, Shop Drawings indicating fire protection installation work or changes shall still be prepared and submitted to the DoA for as-built record purposes.

E. Past Fire Protection Work: Past work on the existing ABIA Terminal SimplexGrinnell fire protection and fire sprinkler systems has been provided by SimplexGrinnell, Western States Fire Protection and ACE Fire Equipment.

1.14 SECURITY SYSTEM WORK

A. General: DoA security system drawings are security sensitive documents and shall be treated as such by the Contractor.
- Any ABIA security system work shall be coordinated with the Owner.
- Systems shall only be modified by a firm certified to do work on BOTH the existing ABIA "Hirsch-Identive Velocity" access control system and the "Genetec Omnicast 4.2" video management system.
- A minimum of 14 working days before starting work in the field, Contractor shall submit documentation of certification credentials for security system work for DoA review and approval.
- Past work on existing ABIA security systems has been provided by EO Integrated Systems, Convergint Technologies and Fisk Electric, who have all been known to be certified to work on BOTH systems.

.

B. Separate Raceway: Contractor shall install all access control wiring in separate conduit (not shared).

C. As-Built Record Drawings: Contractor shall submit as-built record drawings mark-ups of existing DoA security system drawings provided by the Owner. Mark-ups shall indicate systems changes for Owner review, approval and files.

1.15 HVAC CONTROLS WORK

Work at airport facilities shall be coordinated and integrated with the existing HVAC control systems, as specified and/or required.

1.16 PHONE-DATA-COMMUNICATION SYSTEMS WORK

General: Work shall be coordinated and integrated with the existing building phone, data and communications systems, as specified and/or required by the DoA.

- Unless specified otherwise, Contractor shall install raceways with pull strings for any required phone, data or communications lines in the ABIA Terminal and DoA Information Systems staff or approved sub-contractor shall install system cabling anf termination work at Contractor's expense.
- Past work on existing airport phone-data-communications system has been provided by NEC.

1.17 TERMINAL PUBLIC ADDRESS INTERCOM SYSTEM

ABIA Terminal renovation work shall be coordinated and integrated with the existing building public address/intercom system, as specified and/or required by the DoA.

1.18 ROOF WORK REQUIREMENTS

Any revisions to existing DoA building roofs shall be as coordinated with the DoA. Unless specifically directed otherwise, contractor shall provide the roofing work contractor credentials to the DoA confirming that the firm is certified to work on the specific type of DoA building roof to be repaired, penetrated or otherwise modified. The DoA shall also be provided Shop Drawings of the roof modification work for Owner review and approval.

1.19 SALVAGE ITEMS

Unless specified otherwise, work salvage items are the property of the DoA. The DoA may choose to have the Contractor properly dispose of any project salvage items or materials at Contractor expense. Unless approved otherwise by the DoA, salvage items or materials removed during the work shall not be re-used in the project.

1.20 BUY AMERICAN

Contractor procurements shall adhere to latest Federal government requirements to "Buy American" for projects that are funded in part or totally with Federal funds. As required, contact the Owner to confirm if project is federally funded.

1.21 CLEAN-UP

General: Work areas shall be safely and properly secured and cleaned at the end of each work period to the satisfaction of the DoA.

- Contractor is responsible for maintaining a clean work site, providing his own cleaning materials and equipment and for cleaning any dirt, dust and/or debris that is tracked

across the floor or other surfaces in areas around the work site that is a result of the Contractor operations.

- As approved by the DoA, Contractor may be provided access to janitorial closet for water. If Contractor uses janitorial closet for water, he is responsible for returning the closet to its original clean condition when finished with it each day.
- Contractor shall not utilize the public restroom facilities for cleaning operations.

1.22 WASTE MANAGEMENT

General: As specified, project work waste materials should be salvaged, reused, or recycled in order to minimize the impact of construction and demolition waste on landfills, and to minimize the expenditure of energy and cost in fabricating new materials.

- As much of the waste materials as economically feasible shall be reused, salvaged or recycled.
- Waste disposal in landfills or incinerators shall be minimized.
- As approved by the Owner, methods of waste material diversion include the following: (1) Donation to nonprofit organizations, (2) Removal from jobsite by staff or sub-contractors for use (not disposal), (3) Return to supplier, (4) Sale or donation to organizations or individuals, or (5) Recycling.
- Construction waste material shall not be introduced or comingled with normal airport day-to-day waste stream.

1.23 TRAINING

General: DoA staff shall be provided O&M training for installed equipment, building systems, materials and/or other installed work items that need to be operated or maintained.

- All training sessions shall be as specified and shall be as coordinated and acceptable to the DoA.
- Contractor shall videotape all training sessions in a manner acceptable to the DoA and provide training video file in a format and manner acceptable to the DoA.
- Contractor shall provide all specified project work training labor and materials.
- Contractor shall provide a video file of any site, class or equipment supplier training for use by the DoA to help train DoA personnel after construction work completion.
- Training video files type and format shall be as approved by the DoA and shall be provided as part of work Close-Out documentation required prior to release of Final Payment.

PART 2 - PRODUCTS (Not Used)

PART 3 - EXECUTION (Not Used)

Attachments:
01 - Barricade Drawings
02 - Temporary Partition Wall Drawing
03 – Contractor Parking Program for Work at ABIA
04 – Contractor Tool Management and Deliveries Program at ABIA

END OF SECTION 01041

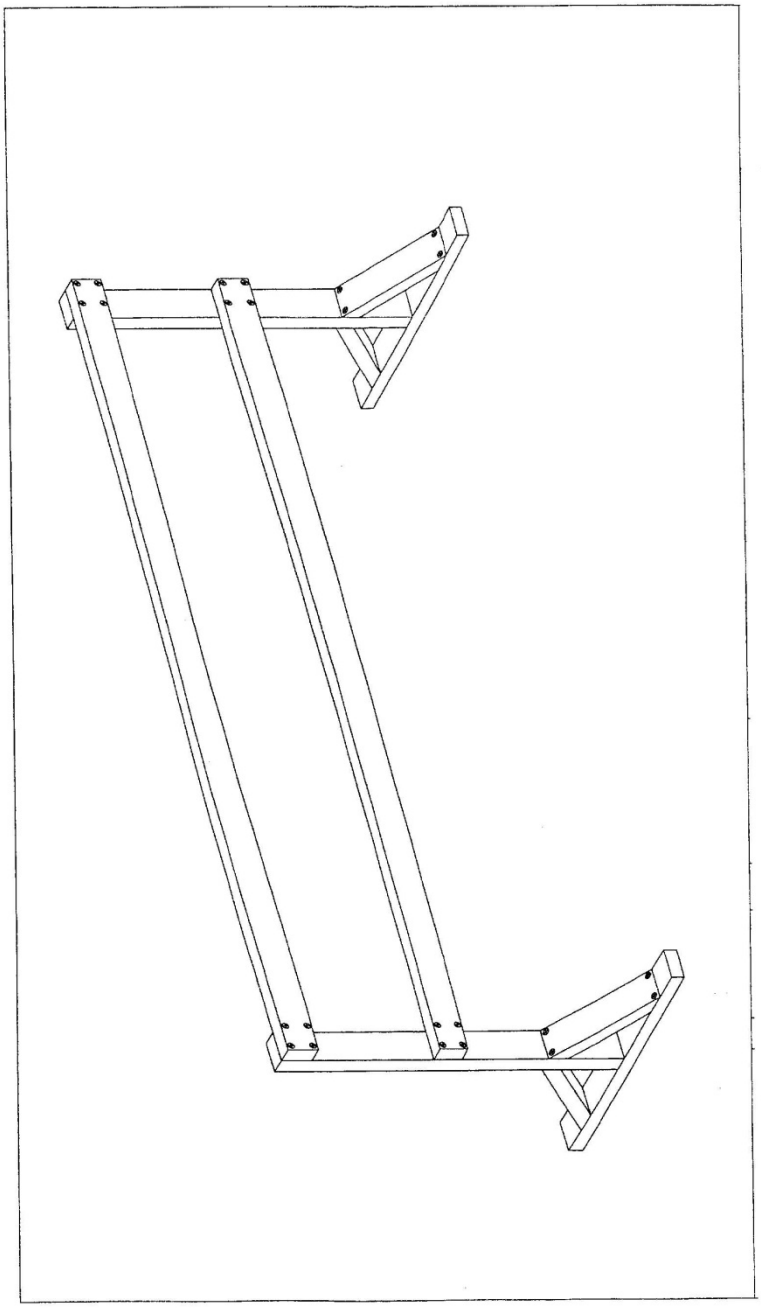

Attachment 01 – Page 01

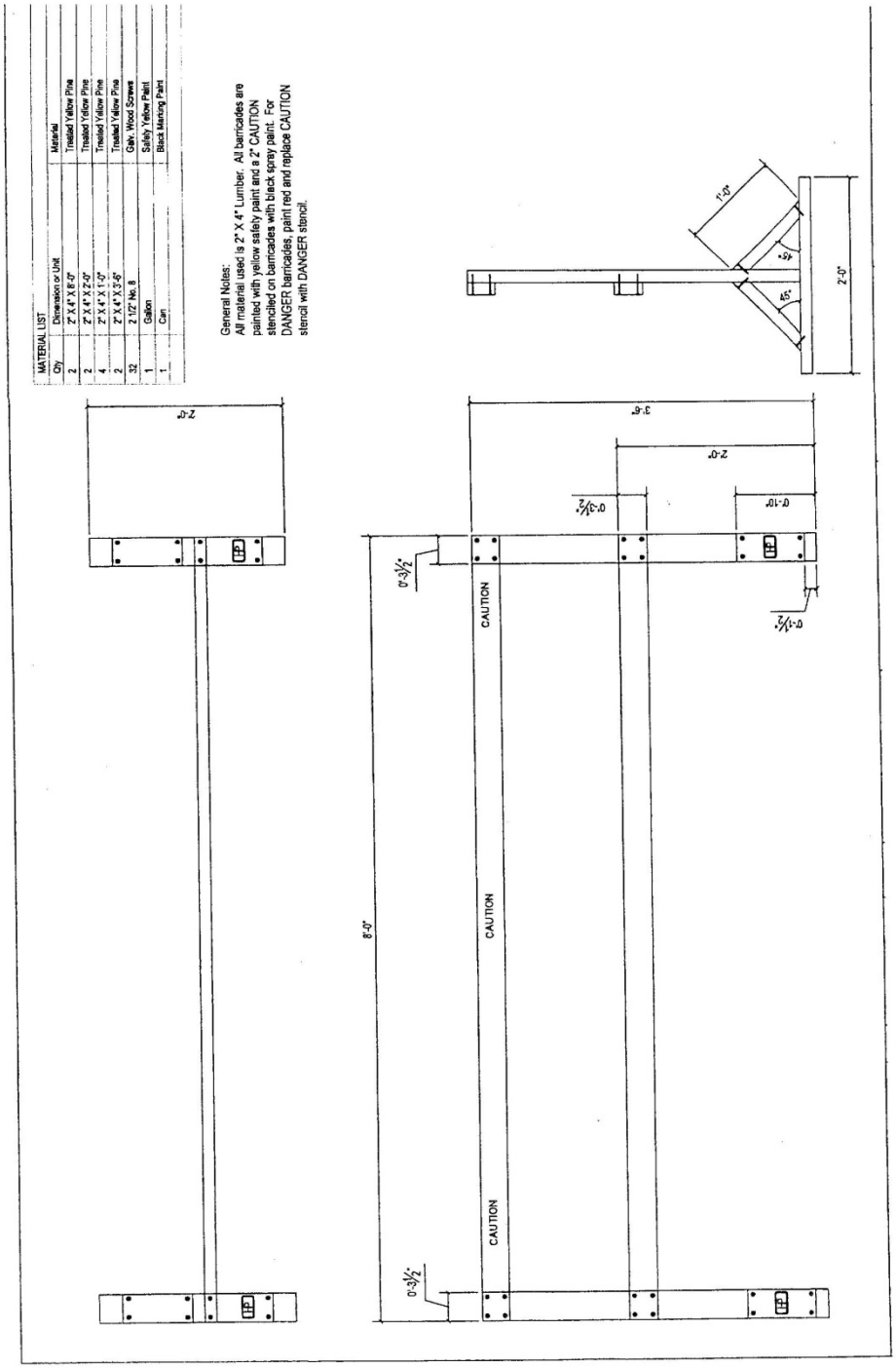

END OF SECTION

Attachment 01 – Page 02

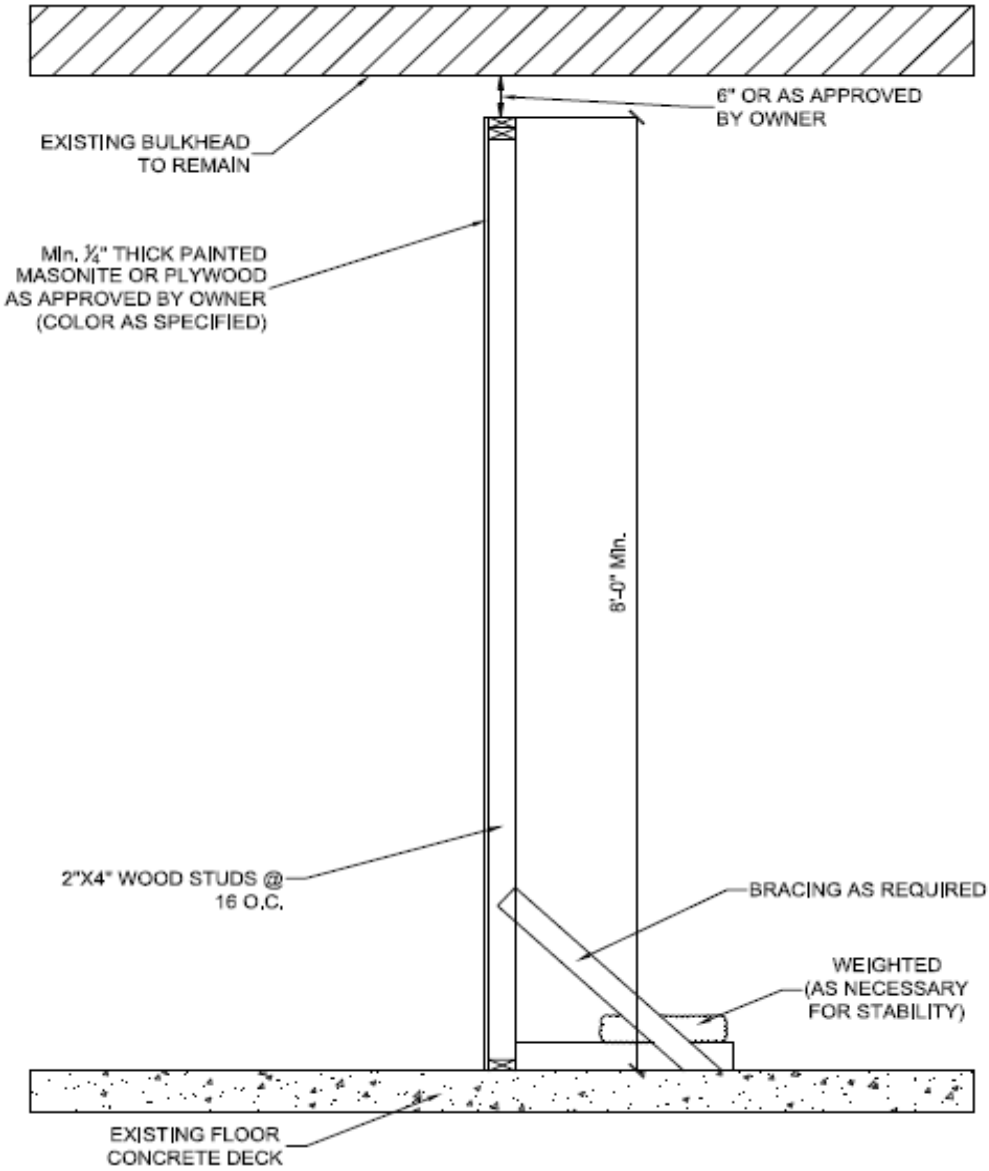

02 TEMPORARY PARTITION WALL DETAIL

1/2"=1'-0"

N:\MISC\11Nov14 Temporary Barricade Wall Detail.dwg, 8.5x11

City of Austin
Aviation Department

Contractor Parking Program for Work at ABIA

Issued: November 13, 2014

1.0 Contractor Parking

1.1 Parking Approval and Vehicle Identification

Parking for contractors at Austin-Bergstrom International Airport (ABIA) shall be as specified and/or approved by the Owner. Parking at or around the ABIA Terminal Building is limited and subject to availability. **Parking within 10 feet of the airport fence line is PROHIBITED.**

Only contractor personnel authorized by the DoA Project Manager or Designated Project Representative (PM/DPR) shall be allowed parking privileges in designated areas near the Terminal.

Parking administration for the contractor parking is a collaborative exercise between the ABIA Project Manager/Designated Representative (PM/DPR) and the contractor.

Vehicles allowed to park in designated areas near the Terminal shall be required to be identified as contractor vehicles by one of the following approved methods:

- Use of a ABIA Airport Parking Authorization Placard (See Attachments 1&2)
- Use of PM/DPR approved contractor mirror hang tag

Parking on the Terminal Apron will require the addition of the company logo affixed to two sides of the vehicle.

Parking contractor vehicles near Terminal without proper identification is prohibited and shall subject vehicle drivers and Owners to DoA Security program protocol, up to and including towing of vehicles, assessment of fines and/or other applicable law enforcement measures.

As needed, the PM/DPR shall provide the contractor with a block of numbers to assign to their allotment of ABIA Airport Parking Authorization Placards or contractor mirror hang tags. In addition, contractor shall provide the initial ABIA Parking Administration Log to the PM/DPR (See Attachment 3) for review and submittal to DoA Security.

Contractor will administer the parking authorization for their personnel as approved by the PM/DPR and is responsible for control and updating of which ever parking media is approved by the PM/DPR. Contractor will maintain a current ABIA Parking Administration Log at all times and shall provide updates to the PM/DPR when there are proposed changes.

1.2 Identification of Parking Areas and Parking Protocol near ABIA Terminal

Gate 1 Ramp Area Parking (G1R), (See Attachment 4): G1R contractor parking area is controlled by the airport's Security Division. Access to this lot is via New Hotel Drive with entry through AOA Gate E110. Contractor vehicles parked in this area are required to have proper identification as noted in para. 1.1. Vehicle inspections are not required when parking in this area.

Apron Area/Tug Tunnel Parking: Terminal Apron Area/Tug Tunnel parking is available on a strictly authorized and extremely limited basis. Anyone wishing to utilize this area must have ABIA Ramp Driving Privileges or be under authorized escort. When authorized, parking shall be limited to the immediate work site. **PARKING WITHIN 10 FEET OF THE AIRPORT FENCE IS PROHIBITED.**

Access to this area is via AOA Gate W 175, West Service Road, and Check Point Charlie. At Check Point Charlie, the vehicle driver will render their vehicle for inspection to the ABIA Security Officer.

The Security Officer will inspect the vehicle and its contents and all materials, supplies, and equipment. Should tools be proposed to enter the airport secured area the procedures detailed in the 'Contractor Tool Management and Deliveries Program for Work at ABIA' will be followed.

1.3 Contractor Access to Secured Areas of the Terminal

General: To access airport secured areas, contractor personnel are required to apply for and be issued an ABIA Security & Identification Display Area badge (Category - Green, Class - Construction Group 1) or be under escort as approved by the PM/DPR.

Normal Gate 1 Ramp Access: G1R access area is controlled by the Airport's Security Division. G1R is a pedestrian only access entry control point into the airport secured areas. The following are the G1R current hours of operation.

	Open	Closed
Monday thru Friday	0430	1430
Saturday thru Sunday	0900	1100

After Hours Gate 1 Ramp Access: To utilize G1R entry control point after business hours, Airport Communications shall be contacted at 512.530.2242. A Security Officer will be dispatched (when available) to the location to secure access for the requestor.

Check Point Charlie: Check Point Charlie is open 24 hours a day, 7 days a week and is for vehicular traffic entry only. Contractor personnel must have West Service Road access through AOA Gate W 175 in order to access Checkpoint Charlie.

Utilization of this entry control point is either under authorized escort or by vehicles and drivers who have satisfied the vehicle ramp driving requirements and have their vehicles officially registered with the Airport Operations Project Coordinator.

END

Attachment 1 – ABIA Airport Construction Parking Authorization
Attachment 2 – ABIA Airport Construction Parking Authorization
Attachment 3 – ABIA Airport Construction Parking Authorization Log

Attachment 1

ABIA AIRPORT CONSTRUCTION PARKING AUTHORIZATION

PARKING WITHIN 10 FEET OF THE AIRPORT FENCE LINE IS PROHIBITED.

(PROJECT NAME)

(GENERAL CONTRACTOR NAME)

(SUB CONTRACTOR NAME)

ISSUE DATE _____/_____/_____

EXPIRATION DATE _____/_____/_____

CONTACT NUMBER _____/_____/_____

_____

PLACARD NUMBER

ABIA Designated Representative _____ Contact# 512.530._____

Attachment 2

ABIA AIRPORT CONSTRUCTION PARKING AUTHORIZATION

PARKING WITHIN 10 FEET OF THE AIRPORT FENCE LINE IS PROHIBITED.

AIRPORT AIR COLOR

jdw CONSTRUCTION

BLUE SKYS INC.

ISSUE DATE	10	/	16	/	14	
EXPIRATION DATE	05	/	05	/	15	008
CONTACT NUMBER	512	/	530	/	5539	PLACARD NUMBER

Attachment 3

ABIA AIRPORT CONSTRUCTION PARKING AUTHORIZATION LOG

PLACARD/HANG TAG NUMBER	NAME			COMPANY	
	LAST, FIRST				
ISSUE DATE EXPIRATION DATE	MAKE	MODEL	COLOR	TELEPHONE NUMBER	LIC. NUMBER
	LAST, FIRST				
ISSUE DATE EXPIRATION DATE	MAKE	MODEL	COLOR	TELEPHONE NUMBER	LIC. NUMBER
ISSUE DATE EXPIRATION DATE	MAKE	MODEL	COLOR	TELEPHONE NUMBER	LIC. NUMBER
	LAST, FIRST				
ISSUE DATE EXPIRATION DATE	MAKE	MODEL	COLOR	TELEPHONE NUMBER	LIC. NUMBER

City of Austin
Aviation Department

Contractor Tool Management and Deliveries Program for Work at ABIA

Issued: November 13, 2014

1.0 Contractor Tool Control Procedures

This program is in place for the administration, storage, and control of all tools within the secure side of the Austin-Bergstrom International Airport (ABIA) Terminal area to maintain safety and security. The procedures apply to all tools utilized by contractor personnel who are working and/or who stage tools in the secured areas of the airport.

1.1 Tool Entry Points

Unless specifically approved otherwise by the DoA Project Manager or Designated Project Representative (PM/DPR), tools may only enter the Terminal secure area at two locations: Gate 1 Ramp area and/or through Check Point Charlie.

1.2 Hours of Operations

Checkpoint Charlie is operated 24/7. Normal operation times for Gate 1 Ramp access point are as noted below. Tool entry through Gate 1 Ramp on other than the hours specified should be pre-arranged with the DoA Project Manager/Designated Project Representative (PM/DPR).

	Open	Closed
Monday thru Friday	0430	1430
Saturday thru Sunday	0900	1100

1.3 Tool Management Procedures

The contractor is responsible for insuring control of their tools at all times.

Tool Inventory and Check - Contractor shall prepare (in duplicate) a tool inventory sheet (See Attachment 1) to present to the Security Officer for authentication and signature.

Tools to be utilized by a contractor shall undergo a documented inspection. These inspections should take place at one of two locations, the Gate 1 Ramp or at Check Point Charlie, with some restrictions on what tools may enter the Gate 1 Ramp location.

Tools introduced into the Terminal at the Gate 1 Ramp location will be inventoried by an ABIA Security Officer. Gang boxes **shall not** be permitted into the Terminal through this location.

The Security Officer (SO) should authenticate the tool inventory presented by the contractor categorizing the tools detailed on the list as either Class A or Class B tools.

The SO should affix a ABIA “TOOL BOX BADGE NUMBER” sticker to a major tool item or tool box that is being in-checked into the Terminal complex and shall retain a

copy of the inventory on file in the guard shack. This form should be re-authenticated by the SO when the contractor completes their task and removes the tools from the Terminal.

Missing/Lost Tools - If the contractor discovers a missing/lost tool and the end of the shift they should contact a OPSEC Officer, **512.530.7580** and Airport Communication, **512.530.2242**, notifying them of the incident.

Contractor shall assist the OPSEC Officer in their investigation of any missing or lost tools and determine the actions necessary to insure the safety of the traveling public.

If the ABIA Security Officer (SO) discovers that a tool(s) is lost/missing during the out check, OPSEC shall be contacted to report the problem.

The OPSEC Officer responding should accompany the contractor to the last known location of the tool to conduct a search for the tool with the contractor assistance.

Circumstances of the tool being lost shall be investigated and incident report shall be prepared. Should the lost tool be in the Class A category, procedures shall be implemented to insure the safe travel of the public, as needed.

2.0 Contractor Deliveries into Airport Secured Areas

Contractor shall coordinate with PM/DPR on required escorts for project deliveries into the Airport Operations Area (AOA) or airport secured areas. Contractor deliveries requiring access to the Airport Operations Area (AOA) shall meet the requirements for vehicle driving in the AOA or be under an approved ABIA escort.

Access for contractor deliveries into secured areas of the airport shall be through Gate W-175 Checkpoint Charlie, unless other arrangements have been specifically approved by the PM/DPR.

Deliveries through Checkpoint Charlie: Delivery personnel identification will be verified and registration of their ingress to the AOA recorded by the Airport Security representative on duty.

Delivery vehicle(s) and contents will undergo a search prior to admission being granted. Once access has been granted, deliveries shall proceed directly to the designated delivery location.

Contractor Escorted Deliveries through Checkpoint Charlie: Delivery vehicles may be escorted by AOA authorized contractor vehicles or by ABIA escort authorities e.g., Airport Operations, Airport Security, Airport Building Maintenance and/or Airport Police.

Contractor and escort vehicle(s) will report to Check Point Charlie where they will have their identification verified and registration of their ingress to the AOA recorded by the Airport Transportation Security representative on duty.

Contractor vehicle(s) and escorted delivery vehicle contents will undergo a search prior to admission being granted. Once access has been granted they should proceed to the designated delivery location.

Once at the location the items will be delivered in an expeditious manner and the delivery vehicle will be escorted out of the AOA via Check Point Charlie by the authorized escort. Contractor is responsible for insuring the escorted vehicle(s) are out of the AOA.

ABIA Escorted Deliveries through Checkpoint Charlie: Contractor shall thoroughly coordinate Owner escorted deliveries with the PM/DPR.

Once authorized, contractor shall notify the authorized ABIA escort when they are ready to make a delivery into the AOA. Contractor shall meet the escort authority at a designated location.

At the designated location, contractor shall provide proper identification and have registration of their entry into the AOA recorded by the Airport Security representative on duty.

Delivery vehicle(s) and vehicle contents will undergo a search prior to admission being granted. Once access has been granted, the delivery vehicle will be escorted to the designated parking location.

Once at the location the items will be delivered in an expeditious manner and the delivery vehicle will be escorted out of the AOA by a route deemed appropriate by the escort authority.

General: Escorted contractor vehicles are not authorized to remain in the secured areas of the airport. Vehicle drivers are required to remain under escort authority control at all times and may only leave the vehicle to make the delivery.

ABIA **is not** responsible for any logistical support for deliveries or pickups, including vehicle off-loading, on-loading or final placement of delivery items.

END

Attachment 1 – ABIA Tool Inventory List

Attachment 1

ABIA TOOL INVENTORY LIST

PROJECT NAME: _____

CONTRACTOR NAME: _____

DATE	TIME		TOOL DESCRIPTION	CLASS		QTY	
	IN	OUT		A	B	IN	OUT

DEFINITIONS

General: Basic Contract definitions are included in the General Conditions, Section 00700 included herein.

Approved: The term approved, when used in conjunction with the Owner's Representative's action on the CONTRACTOR'S submittals, applications, and requests, is limited to the Owner's Representative's duties and responsibilities as stated in the Conditions of the Contract. A stamp reading "No Exceptions Taken" shall have the same intent as "Approved".

Furnish: The term furnish means supply and deliver to the Project site, ready for unloading, unpacking, assembly, installation, and similar operations.

Indicated: The term indicated refers to graphic representations, notes, or schedules on the Drawings, or other paragraphs or schedules in the Specifications, and similar requirements in the Contract Documents. Terms such as shown, noted, scheduled, and specified are used to help the reader locate the reference. There is no limitation on location.

Install: The term install describes operations at the Project site including the actual unloading, unpacking, assembly, erecting, placing, anchoring, applying, working to dimension, finishing, curing, protecting, cleaning, and similar operations.

Installer: An Installer is the CONTRACTOR or another entity engaged by the CONTRACTOR, either as an employee, subcontractor, or contractor of lower tier, to perform a particular construction activity, including installation, erection, application, and similar operations. Installers are required to be experienced in operations they are engaged to perform.

Project Site: The space available to the CONTRACTOR for performing construction activities either exclusively or in conjunction with others performing other work as part of the Project. The extent of the Project site is shown on the Drawings and may or may not be identical with the description of the land on which the Project is to be built.

Provide: The term provide means to furnish and install, complete and ready for the intended use.

Regulations: The term regulations includes laws, ordinances, statutes, and lawful orders issued by authorities having jurisdiction, as well as rules, conventions, and agreements within the construction industry that control performance of the Work.

Trades: Using terms such as carpentry is not intended to imply that certain construction activities must be performed by accredited or unionized individuals of a corresponding generic name, such as carpenter. It also does not imply that requirements specified apply exclusively to trades persons of the corresponding generic name.

INDUSTRY STANDARDS

Applicability of Standards: Except where the Contract Documents include more stringent requirements, applicable construction industry standards have the same force and effect as if bound or copied directly into the Contract Documents to the extent referenced. Such standards are made a part of the Contract Documents by reference.

Publication Dates: Comply with the standards in effect as of the date of the Contract Documents.

Conflicting Requirements: Where compliance with two or more standards is specified and where the standards may establish different or conflicting requirements for minimum quantities or quality levels, refer to the Owner's Representative for a decision before proceeding.

Copies of Standards: Each entity engaged in construction on the Project is required to be familiar with industry standards applicable to its construction activity. Copies of applicable standards are not bound with the Contract Documents.

Abbreviations and Names: Trade association names, titles of general standards, and names and titles of government agencies are frequently abbreviated. Where such acronyms or abbreviations are used in the Specifications or other Contract Documents, they mean the recognized name of the trade association, standards-generating organization, authority having jurisdiction, or other entity applicable to the context of the text provision. Refer to the "Encyclopedia of Associations," published by Gale Research Co., available in most libraries.

AA	Aluminum Association
AABC	Associated Air Balance Council
AAMA	American Architectural Manufacturer's Association
AAN	American Association of Nurserymen.
AASHTO	American Association of State Highway and Transportation Officials.
AATCC	American Association of Textile Chemists and Colorists
ACI	American Concrete Institute
ACIL	American Council of Independent Laboratories
ACPA	American Concrete Pipe Association
ADC	Air Diffusion Council
AFBMA	Anti-Friction Bearing Manufacturers Association
AGA	American Gas Association
AGC	Associated General Contractors of America
AGMA	American Gear Manufacturers Association
AHA	American Hardboard Association
AHAM	Association of Home Appliance Manufacturers
AI	Asphalt Institute
AIA	American Institute of Architects
AIHA	American Industrial Hygiene Association
AISC	American Institute of Steel Construction
AISI	American Iron and Steel Institute
AITC	American Institute of Timber Construction.
ALCA	Associated Landscape Contractors of America
ALI	Associated Laboratories, Inc.
ALSC	American Lumber Standards Committee
AMCA	Air Movement and Control Association
ANSI	American National Standards Institute.

AOAC	Association of Official Analytical Chemists
AOSA	Association of Official Seed Analysts
APA	American Plywood Association
API	American Petroleum Institute.
AREA	American Railroad Engineers Association
ARI	Air Conditioning and Refrigeration Institute
ARMA	Asphalt Roofing Manufacturers Association
ASA	Acoustical Society of America
ASA	American Standards Association.
ASC	Adhesive and Sealant Council
ASCE	American Society of Civil Engineers
ASHRAE	American Society of Heating, Refrigerating & Air Conditioning Engineers
ASME	American Society of Mechanical Engineers
ASPE	American Society of Plumbing Engineers
ASSE	American Society of Sanitary Engineering
ASTM	American Society for Testing and Materials.
AWCMA	American Window Covering Manufacturers Association
AWG	American Wire Gage
AWI	Architectural Woodwork Institute
AWPA	American Wood Preservers Association
AWPB	American Wood Preservers Bureau
AWPI	American Wood Preservers Institute
AWS	American Welding Society
AWWA	American Water Works Association
BHMA	Builders Hardware Manufacturers Association
BIA	Brick Institute of America
BIFMA	Business and Institutional Furniture Manufacturers Association
CAGI	Compressed Air and Gas Institute
CAUS	Color Association of the United States
CBM	Certified Ballast Manufacturers

CCC	Carpet Cushion Council
CDA	Copper Development Association
CE	Corps of Engineers
CFR	Code of Federal Regulations
CGA	Compressed Gas Association
CISCA	Ceiling and Interior Systems Construction Association
CISPI	Cast Iron Soil Pipe Institute
CPSC	Consumer Product Safety Commission
CRI	Carpet and Rug Institute
CRSI	Concrete Reinforcing Steel Institute
CS	Commercial Standard of NBS (U.S. Dept. of Commerce)
CTI	Ceramic Tile Institute
DFPA	Douglas Fir Plywood Association
DHI	Door and Hardware Institute
DLPA	Decorative Laminate Products Association
DOC	U.S. Department of Commerce
DOT	Department of Transportation
ECSA	Exchange Carriers Standards Association
EIA	Electronic Industries Association
EIMA	Exterior Insulation Manufacturers Association
EJMA	Expansion Joint Manufacturers Association
EPA	Environmental Protection Agency
FAA	Federal Aviation Administration
FCC	Federal Communications Commission
FGMA	Flat Glass Marketing Association
FHA	Federal Housing Administration
FM	Factory Mutual Research Organization
FS	Federal Specifications
FSC	Forest Stewardship Council
FTI	Facing Tile Institute
GA	Gypsum Association

GSA	General Services Administration
HEI	Heat Exchange Institute
HI	Hydronics Institute
H.I.	Hydraulic Institute
HMA	Hardwood Manufacturers Association
HPMA	Hardwood Plywood Manufacturers Association
IBD	Institute of Business Designers
ICEA	Insulated Cable Engineers Association, Inc.
IEEE	Institute of Electrical and Electronic Engineers, Inc.
IESNA	Illuminating Engineering Society of North American
IGCC	Insulating Glass Certification Council
ILI	Indiana Limestone Institute of America
IMSA	International Municipal Signal Association
IRI	Industrial Risk Insurers
ISA	Instrument Society of America
ITE	Institute of Transportation Engineers
LEED™	Leadership in Energy and Environmental Design
LIA	Lead Industries Association, Inc.
LPI	Lightning Protection Institute
MBMA	Metal Building Manufacturer's Association
MCAA	Mechanical Contractors Association of America
MFMA	Maple Flooring Manufacturers' Association
MIA	Marble Institute of America
ML/SFA	Metal Lath/Steel Framing Association
MSS	Manufacturers Standardization Society of the Valve and Fittings Industry
MUTCD	Texas Department of Transportation Manual on Uniform Traffic Control Devices
NAAMM	National Association of Architectural Metal Manufacturers
NAIMA	North American Insulation Manufacturers Association
NAPA	National Asphalt Pavement Association

NBFU	National Board of Fire Underwriters
NBGQA	National Building Granite Quarries Association
NBS	National Bureau of Standards (U.S. Dept. of Commerce)
NCMA	National Concrete Masonry Association
NCRPM	National Council on Radiation Protection and Measurements
NCSPA	National Corrugated Steel Pipe Association
NEC	National Electrical Code (Published by NFPA)
NECA	National Electrical Contractors Association
NEII	National Elevator Industry, Inc.
NEMA	National Electrical Manufacturers Association
NETA	International Electrical Testing Association
N.F.P.A.	National Forest Products Association
NFPA	National Fire Protection Association
NHLA	National Hardwood Lumber Association
NIST	National Institute of Standards and Technology
NLGA	National Lumber Grades Authority
NOFMA	National Oak Flooring Manufacturers Association
NPA	National Particleboard Association
NPCA	National Paint and Coatings Association
NRCA	National Roofing Contractors Association
NWMA	National Woodwork Manufacturers Association
OSHA	Occupational Safety and Health Administration
PCA	Portland Cement Association
PCI	Precast/Prestressed Concrete Institute
PDI	Plumbing and Drainage Institute
PE	Professional Engineer
REA	Rural Electrification Administration
RFCI	Resilient Floor Covering Institute
RMA	Rubber Manufacturing Association
RPLS	Registered Professional Land Surveyor
SDI	Steel Deck Institute

S.D.I.	Steel Door Institute
SFPA	Southern Forest Products Association
SGCC	Safety Glazing Certification Council
SIGMA	Sealed Insulating Glass Manufacturers Association
SJI	Steel Joist Institute
SMACNA	Sheet Metal and Air Conditioning Contractors National Association
SPIB	Southern Pine Inspection Bureau
SPRI	Single Ply Roofing Institute
SSPC	Steel Structures Painting Council
SSPMA	Sump and Sewage Pump Manufacturers Association
SWI	Steel Window Institute
SWPA	Submersible Wastewater Pump Association
TCA	Tile Council of America
TEX TEST	TxDOT Laboratory Test
TIMA	Thermal Insulation Manufacturers Association
TPI	Truss Plate Institute
TxDOT	Texas Department of Transportation
UL	Underwriters Laboratory, Inc.
USDA	U. S. Department of Agriculture
USGBC	U. S. Green Building Council
USPS	U. S. Postal Service
WCLIB	West Coast Lumber Inspection Bureau
WCMA	Wallcovering Manufacturers Association
WIC	Woodwork Institute of California
WLPDIA	Western Lath, Plaster, Drywall Industries Association
WRI	Wire Reinforcement Institute
WSC	Water Systems Council
WSFI	Wood and Synthetic Flooring Institute
WWPA	Western Wood Products Association
W.W.P.A.	Woven Wire Products Association

END

PART 1 - GENERAL

1.1 RELATED DOCUMENTS

Documents related to this section will include the construction drawings and general provisions of the Contract, including the General Conditions, Section 00700, Supplemental General Conditions, Section 00810, and other Division 1 requirements.

1.2 SUMMARY

A. This section describes the preconstruction conference and other Project related meetings which may be held on a routine schedule throughout the duration of the Project.

B. The CONTRACTOR, or his authorized representative(s), shall attend all Project related meetings as indicated herein. The CONTRACTOR's representatives, as a minimum, shall include his Project Manager and Superintendent. Other CONTRACTOR's representatives may attend Project related meetings; however, there shall be a maximum of four (4) CONTRACTOR's representatives at any one meeting unless the ENGINEER/ARCHITECT approves a larger number.

C. The CONTRACTOR shall provide all pertinent reports, copies of reports, etc., for each meeting as may be required by this or other sections of the Contract.

1.3 PARTNERING WORKSHOP

A. To complete this work most beneficially for all parties, the Owner desires to form a Partnering Team among the Owner, Engineer/Architect, Contractor, and Subcontractor(s). This relationship will draw on the strength of all parties to identify and achieve mutual goals. The objectives are effective and efficient contract performance, intended to achieve completion within budget, on schedule, and in accordance with the drawings and specifications.

B. The Owner will schedule a Partnering Workshop independent of or in conjunction with the Preconstruction Conference, to facilitate the project objectives. The partnering relationship will be multilateral in makeup and participation will be totally voluntary.

1.4 PRECONSTRUCTION CONFERENCE

A. Attendees

A preconstruction conference shall be held as soon after the award and execution of the Contract as possible and before any Work at the site is started. The conference will be held at a location selected by the Owner's Project Manager. The Owner's Project Manager shall prepare and distribute the meeting agenda, preside over the conference, and may distribute meeting minutes. The conference shall be attended by:

1. CONTRACTOR's Project Manager.
2. CONTRACTOR's Superintendent.
3. Any Subcontractors' and/or Suppliers' representatives whom the CONTRACTOR may desire to invite or whom the ENGINEER/ARCHITECT or OWNER may request to attend.
4. ENGINEER/ARCHITECT's representative.
5. OWNER's Project Manager.
6. OWNER's REPRESENTATIVE
7. OWNER's Sponsor Department Representative.

8. Representative from the City of Austin, Transportation Department if a traffic management plan is required.
9. Representative from the City of Austin, Watershed Protection and Development Review Department, Environmental Inspection Division, if site erosion / sedimentation controls are required.
10. Representative from the City of Austin, Transportation Department if utility coordination has occurred through the Austin Utility Location and Coordination Committee.
11. Representative from the City of Austin, Contract Management Department, Contract Administration Division, to discuss wage.
12. Representative from the City of Austin, Small and Minority Business Resources Department to discuss M/WBE compliance.

B. Meeting topics

The topics to be discussed may include, but will not be limited to, the following items:

1. Introduction of persons attending the meeting.
2. General project description, including length of contract and liquidated damages.
3. Key personnel associated with the construction (may include, but is not limited to the following):
   - CONTRACTOR's Project Manager
   - CONTRACTOR's Superintendent
   - OWNER's Project Manager
   - ENGINEER/ARCHITECT's representative
   - OWNER's Sponsor Department Representative.
   - Representatives of the various utilities.
4. Lines of communication and chains of command.
5. Wage and personnel records and reporting requirements.
6. Subcontractors and suppliers.
7. Submittal review and approval procedure. Submittals may include, but are not limited to the following:
   - Letter stating the name and qualifications of the CONTRACTOR's Superintendent
   - Letter(s) from the Subcontractor(s) listing their salaried specialists
   - If applicable, a letter designating the Registered Professional Land Surveyor
   - If applicable, a letter designating the Safety Representative (for general project safety) and the "Competent Person" for excavation safety
   - Excavation Safety Systems Plan
   - Schedule of Values
   - Schedule for submittals
   - Shop drawings
   - Construction schedule (The schedule shall indicate the phases of work in which subcontractors will be participating. Subcontractors shall be indicated by name.)
   - Payroll reports
   - Substitution of subcontractors
   - Non-use of asbestos materials affidavit
   - Appropriate safety training certificates for workers that will initially be on site

- Documentation for all workers initially on site who are governed by a prevailing wage classification as described in Section 00830.
- Construction Equipment Emissions Reduction Plan

8. Job and traffic safety.
9. Permits.
10. Utility coordination report.
11. Notification of property owners and other affected by the project
12. Job meetings.
13. Use of the site for construction, storage, staging, etc., and interrelationship with other contracts.
14. Equal opportunity requirements.
15. Laboratory testing of material requirements.
16. Inventory of materials stored on site provisions.
17. Progress estimate and payment procedure.
18. Posting of signs.
19. Project safety.
20. Prompt payment procedure.
21. Review of contract - addenda, supplementary general conditions, special provisions, special specifications, and other unique project items.
22. Other

1.5 JOB MEETINGS

A. General

Job meetings shall be held as deemed necessary by the ENGINEER/ARCHITECT or OWNER or as requested by the CONTRACTOR throughout the duration of the Project. The meetings shall be held at a location selected by or approved by the Owner's Representative. The OWNER's REPRESENTATIVE or CONTRACTOR, as agreed to, shall preside over the meeting and issue meeting minutes.

B. Attendees

Job meetings will be attended by the following:

1. CONTRACTOR's Project Manager, when requested to attend.
2. CONTRACTOR's Construction Superintendent.
3. Any subcontractors' and/or suppliers' representatives whom the CONTRACTOR may desire to invite or whom the ENGINEER/ARCHITECT or OWNER requests to attend.
4. OWNER's REPRESENTATIVE
5. ENGINEER/ARCHITECT's representative(s), if needed or required.
6. OWNER's PROJECT MANAGER, if needed or required
7. OWNER's Sponsor Department representative(s), if needed or required.

C. Meeting topics

The topics will include, but not necessarily be limited to, the following subjects:

1. Review of previous meetings' notes and update of pertinent information and Project status.
2. Identification and discussion of new job related construction problems. Such discussion will be toward resolving identified problems.
3. Review work accomplished to date and establish proposed construction activities for the upcoming week(s).
4. Discuss the status of or need for change orders.
5. Check of required bonds and insurance certificates (including Workers' Compensation Insurance verification for CONTRACTOR's, Subcontractor's, and Sub-Subcontractor's employees as stated in Section 00700, General Conditions, 5.2 Workers' Compensation).
6. Status of pay requests.
7. Work in progress.
8. Review and update construction schedule.
9. Review of submittals schedule and status of submittals.
10. Status of SMBR Compliance Plan.
11. Status of Safety Training certificates for all new workers on project.
12. Other.

1.6 OTHER MEETINGS

Other meetings shall be held from time to time as may be requested by the CONTRACTOR, the ENGINEER/ARCHITECT, or the OWNER. The time and place of the meetings shall be as mutually agreed upon. The attendance at the meetings shall be as requested by the party requesting the meeting.

END

PART 1 - GENERAL

1.1 RELATED DOCUMENTS:

The Contractor prepares submittals. Drawings and general provisions of Contract, including Section 00700, “General Conditions”; Section 00810, “Supplemental General Conditions”; Division 1 requirements and City of Austin Technical Specifications and Special Provisions thereto, should be used as the related documents for this requirement. Attachment 1 lists the submittals that have been identified for this project.

1.2 SUMMARY

A. This Section includes administrative and procedural requirements for submittals required for performance of the Work, including the following:

1. Security plan.
2. Contractor's construction schedule.
3. Submittal schedule.
4. Shop drawings.
5. Product data.
6. Samples.
7. Quality assurance and quality control submittals, including calculations, mix designs and substantiating test results.

B. Administrative Submittals: Refer to other Division 1 Sections and other Contract Documents for requirements for administrative submittals. Such submittals include, but are not limited to, the following:

1. Permits.
2. Applications for Payment.
3. Performance and Payment bonds.
4. Insurance certificates.
5. Monthly Subcontractors expense report.
6. Non-use of asbestos affidavits

C. Related Sections: The following Sections contain requirements that relate to this Section:

1. Section 00700, “General Conditions”; Section 00810, “Supplemental General Conditions”; and/or Division 1, Section 01025, "Measurement and Payment" specifies requirements for submittal of the Schedule of Values.

2. Division 1, Section 01200, "Project Meetings" specifies requirements for submittal and distribution of meeting and conference minutes.

3. Section 00700, “General Conditions”; Section 00810, “Supplemental General Conditions”; and/or Division 1, Section 01700, "Contract Close-out" specifies requirements for submittal of Project Record Documents and warranties at project close-out.

4. Section 00700, “General Conditions” Article 6.2.4 specifies requirements for Substitutes and “Approved Equal” Items.

PART 2 - PRODUCTS - not used

PART 3 - EXECUTION

3.1 SUBMITTAL PROCEDURES

Contractor shall be responsible for the following:

A. Coordination: Coordinate preparation and processing of submittals with performance of construction activities. Transmit each submittal sufficiently in advance of performance of related construction activities to avoid delay.

1. Coordinate each submittal with fabrication, purchasing, testing, delivery, other submittals, and related activities that require sequential activity.

2. Coordinate transmittal of different types of submittals for related elements of the Work so processing will not be delayed by the need to review submittals or resubmittals concurrently.

   a. The E/A reserves the right to withhold action on a submittal requiring coordination with other submittals until all related submittals are received.

3. Processing: To avoid the need to delay installation as a result of the time required to process submittals, allow sufficient time for submittal review, including time for resubmittals.

   a. Allow fourteen (14) calendar days for initial review. Allow additional time if the Engineer must delay processing to permit coordination with subsequent submittals.

   b. If an intermediate submittal is necessary, process the same as the initial submittal.

   c. Allow fourteen (14) calendar days for processing each resubmittal.

   d. No extension of Contract Time will be authorized because of failure to transmit submittals to the E/A sufficiently in advance of the Work to permit processing.

B. Submittal Preparation: Place a permanent label or title block on each submittal for identification. Indicate the name of the entity that prepared each submittal on the label or title block.

1. Provide a space approximately 4 inches by 5 inches (100 by 125 mm) on the label or beside the title block on Shop Drawings to record the Contractor's review and approval markings and the action taken.

2. Include the following information on the label for processing and recording action taken.

   a. Project name.
   b. Date.
   c. Name and address of the Contractor’s Engineer.
   d. Name and address of the Contractor.
   e. Name and address of the subcontractor.
   f. Name and address of the supplier.
   g. Name of the manufacturer.
   h. Number and title of appropriate Specification Section.
   i. Drawing number and detail references, as appropriate.

C. Number of Copies:

1. Two (2) copies of the proposed Construction schedule and subsequent revision are required.

2. Two (2) copies of the proposed Submittal schedule and subsequent revision are required.

3. Nine (9) copies of Shop Drawings, Product, Product Samples, Quality Assurance and Quality Control submittals are required.

D. Submittal Transmittal: Package each submittal appropriately for transmittal and handling. Transmit each submittal from the Contractor to the E/A through the Owner's Representative using a transmittal form (An example Transmittal Form is provided at the end of this section). The E/A will not accept submittals received from sources other than the Contractor.

1. On the transmittal, record relevant information and requests for data. On the form, or separate sheet, record deviations from Contract Document requirements, including variations and limitations. Include Contractor's certification that information complies with Contract Document requirements.

2. Number transmittals in sequence for each Series of the Specifications thus: x-xxx. The number after the dash indicates the Section of the Specifications, and the number before the dash is the sequence number of the transmittal. For example, the first item submitted related to Specification Item No. 506, "Manholes" would be labeled **1-506**, the second item submitted would be labeled **2-506**, etc. If the submittal item relates to a Special Provision or Special Specification, use **SP506** or **SS5061**, for example, to indicate the applicable Specification Section. Identify resubmittals with a letter of the alphabet following the original sequence number, using "A" for the first resubmittal, "B" for the second resubmittal, etc. For example, the first resubmittal of the second item submitted for Specification SP506 would be labeled **2A-SP506**.

3.2 CONTRACTOR'S CONSTRUCTION SCHEDULE

A. Construction Schedule: As described in Section 2.4.2 of Section 00700 "General Conditions", prepare a fully developed Contractor's construction schedule ("Baseline Schedule") using Microsoft Project© software unless otherwise approved by Owner's Representative. Submit Baseline Schedule prior to or at the preconstruction conference, and submit updated schedules as specified by the E/A, usually at each regularly scheduled Project Meeting and with each pay application.

1. Detail each significant construction activity and use a weekly timeframe for the schedule. Use the same breakdown of units of the Work as indicated in the "Schedule of Values."

2. With each update, revise task completion percentage and mark completed tasks.

3. Prepare the schedule on a sheet, or series of sheets, of stable transparency, or other reproducible media, of sufficient width to show data for the entire construction period.

4. Secure time commitments for performing critical elements of the Work from parties involved. Coordinate each element on the schedule with other construction activities; include minor elements involved in the sequence of the Work. Show each activity in proper sequence. Indicate graphically the critical path items and the sequences necessary for completion of related portions of the Work.

5. Indicate the phases of work in which subcontractors will be participating. Subcontractors shall be indicated by name.

6. Coordinate the Contractor's Construction Schedule with the Schedule of Values, list of subcontracts, Submittal Schedule, progress reports, payment requests, and other schedules.

7. Indicate substantial completion in advance of the date established for Final Completion to allow time for the E/A's procedures necessary for certification of Substantial and Final Completion.

B. Work Stages: Indicate important stages of construction for each major portion of the Work, including submittal review, testing, and installation.

C. Cost Correlation: Within the Baseline Schedule, provide cost information indicating planned and actual costs. On the appropriate task line(s), show dollar volume of Work performed as of the dates used for preparation of applications for payment. Refer to Section 00700, "General Conditions", Article 14 Payment to Contractor and Completion for cost reporting and payment procedures.

D. Distribution: Following response to the Baseline Schedule submittal, distribute electronic copies to the E/A, subcontractors, suppliers, and other parties required to comply with scheduled dates. Keep a copy at the Project Site at all times.

1. When revisions are made, distribute to the same parties and post in the same locations. Delete parties from distribution when they have completed their assigned portion of the Work and are no longer involved in construction activities.

E. Schedule Updating: Revise the schedule after each meeting, event, or activity where revisions have been recognized or made and as requested by the E/A. Issue the updated schedule concurrently with the report of each meeting, or as requested by the E/A.

3.3 SUBMITTAL SCHEDULE

A. Concurrently with the development of the Contractor's Construction Schedule, prepare a complete schedule of submittals. Submit the initial Submittal Schedule along with the Construction Schedule, at, or prior to, the Pre-construction Conference.

1. Coordinate Submittal Schedule with the list of subcontractors, Schedule of Values, and the list of products as well as the Contractor's Construction Schedule.

2. Prepare the schedule in chronological order. Provide the following information:

a. Scheduled date for the first submittal.
b. Related Section number or Specification number.
c. Submittal category (Shop Drawings, Product Data, Calculations, Test Results, or Samples).
d. Name of the subcontractor.
e. Description of the part of the Work covered.
f. Scheduled date for resubmittal.
g. Scheduled date for completion of the E/A's review.

B. Distribution: Following Owner's response to the initial submittal, print and distribute copies to the Owner's Representative, E/A, Owner, subcontractors, suppliers, and other parties required to comply with submittal dates indicated. Keep copies at the Project Site at all times.

1. When revisions are made, distribute to the same parties and post in the same locations. Delete parties from distribution when they have completed their assigned portion of the Work and are no longer involved in construction activities.

C. Schedule Updating: Revise the schedule after each meeting or activity where revisions have been recognized or made. Issue the updated schedule concurrently with the report of each meeting, or as requested by the E/A.

3.4 CONSTRUCTION SEQUENCE PLANS

The Contractor is required to submit construction sequence plans to the City at, or prior to, the pre-construction conference for approval. The Project shall be divided into phases according to the sequence of construction given in the Drawings and traffic control plans. The Contractor shall arrange his/her work schedule to complete all Work on each phase, including street repair, any valve casting or manhole adjustments, and street overlay before moving on to the next work area.

3.5 SHOP DRAWINGS

A. Submit newly prepared information drawn accurately to scale. Highlight, circle, or otherwise indicate deviations from the Contract Documents. Do not reproduce Contract Documents or copy standard information as the basis of Shop Drawings. Standard information prepared without specific reference to the Project is not a Shop Drawing.

B. Shop Drawings include fabrication and installation Drawings, setting diagrams, schedules, patterns, templates and similar Drawings. Include the following information:

1. Dimensions;
2. Identification of products and materials included by sheet and detail number;
3. Compliance with specified standards;
4. Notation of coordination requirements; and
5. Notation of dimensions established by field measurement.
6. Sheet Size: Except for templates, patterns and similar full-size Drawings, submit Shop Drawings on sheets at least 8-1/2 inches by 11 inches but no larger than 24 inches by 36 inches.
7. Do not use Shop Drawings without an appropriate stamp indicating action taken.

3.6 PRODUCT DATA

A. Collect Product Data into a single submittal for each element of construction or system. Product Data includes printed information, such as manufacturer's installation instructions, catalog cuts, standard color charts, roughing-in diagrams and templates, standard wiring diagrams, applicable certifications and performance curves.

1. Mark each copy to show applicable choices and options. Where printed Product Data includes information on several products that are not required, mark copies to indicate the applicable information. Include the following information:

   a. Manufacturer's printed recommendations;
   b. Compliance with trade association standards;
   c. Compliance with recognized testing agency standards;
   d. Application of testing agency labels and seals;
   e. Notation of dimensions verified by field measurement; and
   f. Notation of coordination requirements.

2. Do not submit Product Data until compliance with requirements of the Contract Documents has been confirmed.

3. Distribution: Furnish copies of final submittal to installers, subcontractors, suppliers, manufacturers, fabricators, and others required for performance of construction activities. Show distribution on transmittal forms.

   a. Do not proceed with installation until a copy of the final submission of Product Data is in the Installer's possession.

   b. Do not permit use of unmarked copies of Product Data in connection with construction.

4. Potable Water, Reclaimed Water, and Wastewater Items or Projects: The Contractor shall submit descriptive information and evidence that the materials and equipment the Contractor proposes for incorporation into the Work is of the kind and quality that satisfies the specified functions and quality. **Austin Water Utility Standard Products Lists (SPL)** are a part of the Specifications. Contractors shall use products specified in the Contract Documents, listed on the SPLs, or approved by AWU through the process in Section 2.4.0 of the Utilities Criteria Manual. Products contained in the SPL cannot be substituted for items shown on the Drawings, or called for in the specifications, unless approved by the E/A in conjunction with the Austin Water Utility Standards Committee. **Unless otherwise**

specified, products current at the time of solicitation shall be installed except where an updated List has been issued to remove a product because of quality or performance issues.

3.7 SAMPLES

A. Submit full-size, fully fabricated Samples cured and finished when specified and physically identical with the material or product proposed. Samples include partial sections of manufactured or fabricated components, cuts or containers of materials, color range sets, and swatches showing color, texture, and pattern.

1. Mount or display Samples in the manner to facilitate review of qualities indicated. Include the following:

   a. Specification Section number and reference;
   b. Generic description of the Sample;
   c. Sample source;
   d. Product name or name of the manufacturer;
   e. Compliance with recognized standards; and
   f. Availability and delivery time.

2. Submit Samples for review of size, kind, color, pattern, and texture. Submit Samples for a final check of these characteristics with other elements and a comparison of these characteristics between the final submittal and the actual component as delivered and installed.

   a. Where variation in color, pattern, texture, or other characteristic is inherent in the material or product represented, submit at least 3 multiple units that show approximate limits of the variations.

   b. Refer to other Specification Sections for requirements of Samples that illustrate workmanship, fabrication techniques, details of assembly, connections, operation, and similar construction characteristics.

   c. Refer to other Sections for Samples to be returned to the Contractor for incorporation in the Work. Such Samples must be undamaged at time of use. On the transmittal, indicate special requests regarding disposition of Sample submittals.

   d. Samples not incorporated into the Work, or otherwise designated as the Owner's property, are the property of the Contractor and shall be removed from the site prior to Substantial Completion.

3. Maintain sets of Samples, as returned, at the Project Site, for quality comparisons throughout the course of construction.

   a. Unless noncompliance with Contract Document provisions is observed, the submittal may serve as the final submittal.

   b. Sample sets may be used by Owner for final acceptance of the construction associated with each set.

B. Distribution of Samples: Prepare and distribute additional sets to subcontractors, manufacturers, fabricators, suppliers, installers, and others as required for performance of the Work. Show distribution on transmittal forms.

3.8 QUALITY ASSURANCE AND QUALITY CONTROL SUBMITTALS

A. Submit quality assurance and quality control submittals, including design data, certifications, manufacturer's instructions, manufacturer's field reports, materials test results, field testing and inspection reports, and other quality-control submittals as required under other Sections of the Specifications.

B. Certifications: Where other Sections of the Specifications require certification that a product, material, or installation complies with specified requirements, submit a certification from the manufacturer or responsible Engineer certifying compliance with specified requirements.

1. Signature: Certification shall be signed by an officer of the corporation or other individual authorized to sign documents on behalf of the company.

C. Calculations: When required in the technical specification, calculations shall be prepared and stamped by a Professional Engineer registered in the State of Texas.

D. Concrete, Controlled Low Strength Material, Asphalt Stabilized Base and Hot Mix Asphaltic Concrete Mix Designs and Substantiating Test Data: Requirements for submittal of mix designs and substantiating test data are specified in the applicable Technical Specification Section. Each separate batch plant supplying ASB, HMAC and/or concrete shall submit mix designs to the Owner's Representative for review.

3.9 TECHNICAL SUBMITTALS REQUIRED

A. Technical submittals required include, but are not limited to, the following list. This list is provided as an aid to the Contractor, but is not intended to be all inclusive. The Contractor shall refer to the Technical Specifications for additional requirements.

Specification	Type of Submittal
02466 – Drilled Piers	Product Data, Design Mixtures, Shop Drawings
03301 – Miscellaneous Cast-In-Place Concrete	Product Data, Design Mixtures
05120 – Structural Steel	Product Data, Shop Drawings
05121 – Architecturally Exposed Structural Steel Framing	Shop Drawings, Samples
09911 – Exterior Painting	Product Data, Samples, Product List
09960 – High-Performance Coatings	Product Data, Samples, Product List
057500 – Decorative Formed Metal	Product Data, Sustainable Design Submittals, Shop Drawings, Samples, Delegated-Design Submittal
060660 – Acrylic Panel Translucent Resin Panel System	Product List, Product Data, Product Test Reports, Shop Drawings, Samples, Mockups
079200 – Joint Sealants	Product Data, Sustainable Design Submittals, Samples, Joint Sealant Schedule,
129343 - Benches	Product Data, Shop Drawings, Samples, Warranty
16051 – Common Work Results for Electrical	Shop Drawings, Product Data
16510 - Lighting	Product Data, Shop Drawings, Field Quality Control Reports.

3.10 ENGINEER/ARCHITECT'S ACTION

A. Except for submittals, for the record, or for information where action and return is not required, the E/A will review each submittal, mark to indicate action taken, and return within the time frame specified in Paragraph 3.1.A.3.

1. Compliance with specified characteristics is the Contractor's responsibility.

B. Action Stamp: The E/A will stamp each submittal with a uniform, action stamp. The E/A will mark the stamp appropriately to indicate the action taken, as follows:

1. “Reviewed”: the Work covered by the submittal may proceed provided it complies with requirements of the Contract Documents. Final payment depends on that compliance.
2. "Reviewed with Comments”: the Work covered by the submittal may proceed provided it complies with notations or corrections on the submittal and requirements of the Contract Documents. Final payment depends on that compliance.
3. "Revise and Resubmit” or “Rejected": do not proceed with Work covered by the submittal, including purchasing, fabrication, delivery, or other activity. Revise or prepare a new submittal according to the notations and resubmit without delay. Repeat if necessary to obtain different action mark.
   a. Do not use, or allow others to use, submittals marked "Revise and Resubmit" or “Rejected” at the Project Site or elsewhere where Work is in progress.
4. Other Action: Where a submittal is for information, or for record purposes, or for special processing, or for other activity, the E/A will return the submittal marked “Record Copy”, “Action Not Required” or “No Action Taken."

C. Unsolicited Submittals: The E/A will return unsolicited submittals to the sender without action.

3.11 PREPARATION AND SUBMITTAL OF CONSTRUCTION RECORD DRAWINGS

The Owner’s Representative and the Contractor’s Superintendent will each maintain a set of bluelines noting any changes in ink during construction of the Project. The Owner’s Representative and the Contractor’s Superintendent will compare bluelines at least weekly (at a time mutually acceptable to both) to exchange information and compare notes to ensure all items installed and changes are documented. The following is a recommended minimum of items to be noted:

GENERAL

1. Notes should be sufficiently clear to allow a draftsperson to easily make the necessary changes without the need for field checks and interpretation.
2. One complete set of Construction Record bluelines will be submitted prior to the final pay request and forwarded to the Owner.

STREET RECONSTRUCTION AND OVERLAY PROJECTS

1. Location, type, and quantity of all work added or deleted from the Project including repair areas, milled areas, sidewalk, ramps, curb and gutter, etc.
2. Deviations in street, sidewalk, curb and gutter location and grades from Drawings.

WATER/WASTEWATER PROJECTS

1. Type, name and model numbers of all valves (with # of turns to open/close), air release valves, drain and fire hydrants noted at locations installed.
2. Installed locations of all assignments, appurtenances and elevations which differ from those indicated on the Drawings.
3. Pipe manufacturer type and classification noted in sufficient detail to determine location and extent of each type or classification installed.
4. Modification to any standard or special details noted.
5. Location and description of pipe closures.
6. Thrust blocking locations and restrained pipe lengths, approximate dimensions and quantities noted.
7. Location, type and quantity of all addition and deletions.
8. Changes in grade.

The above list is not intended to be complete. Any information noted which could be used for future maintenance, location and construction projects is encouraged to be noted on the bluelines.

3.12 CONSTRUCTION DIARIES

The Contractor shall prepare a daily construction diary recording as a minimum the following information concerning events at the site and submit duplicate copies to the Owner's Representative at weekly intervals. The copies are to be signed by the project Superintendent as defined in Section 00700, Article 6.1.2.

1. Work performed;
2. Approximate count of Contractor's personnel, by classification, on the site;
3. List by classification, of all Subcontractors, personnel and any professionals on the site that day;
4. List of all equipment on the site by make and model;
5. High and low temperatures together with general weather conditions;
6. Start time and finish time of day's work;
7. Accidents and / or unusual events;
8. Meetings and significant decisions made;
9. Stoppages, delays, shortages and / or losses;
10. Meter readings and / or similar recordings;
11. Emergencies procedures that may have been needed;
12. Orders and requests of governing authorities;
13. Change Orders received and implemented;
14. Services connected and / or disconnected;
15. Installed equipment and / or system tests and / or startups and results;
16. Partial completions and / or occupancies; and
17. Date of substantial completion certified.

Shop Drawing Transmittal

Month XX, 2008

Transmittal No. _____
Previous Transmittal No. _____
Previous Submittal Date _____

City of Austin
Construction Inspection Division
Public Works Department
P.O. Box 1088
Austin, Texas 78767

Project Name: Austin Lakeside Drive

Attention: Owner's Representative

Enclosed are nine (9) copies of the following items for your review:

Item No.	Description	Submittal Type	Specification Section	Subcontractor/Supplier
1.	6" DI Pipe	Produce Data	510	ABC Company
2.	8" Resilient Seat Gate Valve	Product Data	511	DEF Company

NOTE: Item 1 above contains a deviation from the Specifications as indicated on the item

Submitted by: _____

XYZ Company
101 Ranch Road 2974
Austin, Texas 78759

Example

END

Division 1 General Requirements

SUSTAINABLE CONSTRUCTION REQUIREMENTS

Section 01352

SECTION 01352.4

Non-Building Project – Aviation

PART 1 - GENERAL

1.1 RELATED DOCUMENTS

Drawings and general provisions of the Contract, including General and Supplementary Conditions and other Division 1 Specification Sections, apply to this Section. The requirements may or may not include reference to sustainability.

Related Sections include the following Division 1 Sections:

1. The contents of this Section are related to all Sections of these Specifications.
2. Section 01300 Submittals.
3. Section 01505 Construction and Demolition Waste Management and Disposal.

1.2 SUMMARY

A. This Section includes requirements and procedures for compliance with certain Sustainable Construction requirements.

1. Some Sustainability requirements are dependent on material selections and may not be specifically identified as sustainability requirements. Compliance with requirements may be used as one criterion to evaluate substitution requests.

2. Additional Sustainability Construction requirements are dependent on design and other aspects of the Project that are not part of the Work of the Contract.

1.3 DEFINITIONS

A. **Regionally Manufactured Materials:** Materials that are manufactured within a radius of 500 miles (800 km) from the Project location. Manufacturing refers to the final assembly of components into the product that is installed at the Project site.

B. **Regionally Extracted, Harvested, or Recovered Materials**: Materials that are extracted, harvested or recovered and manufactured within a radius of 500 miles (800 km) from the Project site.

C. **Recycled Content:** The percentage by weight of constituents that have been recovered or otherwise diverted from the solid waste stream, either during the manufacturing process (pre-consumer), or after consumer use (post-consumer).

D. **Post-consumer recycled content:** The percentage (by weight) of a reclaimed waste material contained in a product. A reclaimed waste material (e.g., newspaper, magazines, beverage containers, etc.) has already served a purpose to a consumer and has been diverted or separated from waste stream for recycling.

E. **Pre-Consumer Recycled Content:** (or Post-industrial recycled content). The percentage (by weight) of a waste material obtained from industrial processes that is contained in a product. Discarded materials from one manufacturing process that are used in another manufacturing process are pre-consumer recycled materials. Wastes from the original manufacturing process used in the same product after minimal reprocessing are <u>not</u> recycled material.

F. Recycled material: A material that would otherwise be destined for landfill disposal but is diverted or separated from the waste stream, reintroduced as material feedstock, and processed into marketed end products.

G. Reused Material: Any item that is salvaged or reused without significant reprocessing as in a recycling process.

H. Source reduction: Minimization of waste at the start of a process or activity so that there is a reduced amount of waste to recycle or dispose. Also called precycling.

I. Xeriscape: Quality landscaping that conserves water and protects the environment through its employment of seven principles: planning and design; soil analysis; appropriate plant selection; practical turf areas; efficient irrigation; use of mulches; and appropriate maintenance.

1.4 SUSTAINABILITY OBJECTIVES/GOALS

The City of Austin is committed to sustainability and expects the Project to reflect this commitment. The specific Sustainable (Design & Construction) goals for this project include:

1. Protection of the environment.
2. Limiting construction site area and disturbance of natural habitat and protection of trees and vegetation.
3. Reduction of waste created by construction activity through Source Reduction.
4. Increasing the use of materials and products with recycled content.
5. Chemically safe construction materials and pest management.
6. Construction materials that use less energy and create less pollution in manufacture, delivery, installation, renovation, and demolition.

1.5 SUBMITTALS

A. *Sustainability submittals:* If required submitted item is identical to that submitted for another requirement, submit duplicate copies for each separate submittal.

B. *Sustainable Construction Action Plans*: Provide preliminary submittals within 14 calendar days of date established for the Notice of Award indicating how the following requirements will be met.

1. Construction & Demolition Waste Management Plan complying with Division 1 Section 01505 "Construction Waste Management."
2. List of proposed materials with recycled content, indicating cost, post consumer recycled content, and pre-consumer recycled content for each product having recycled content.
3. List of proposed regionally manufactured materials and regionally extracted, harvested, or recovered materials, identifying each regionally manufactured material and its source.

C. *Sustainability Contract Closeout Documentation*:

1. Comply with Division 1 Section 01505 "Construction Waste Management."
2. Provide manufacturer's product Data indicating percentages by weight of post-consumer and pre-consumer recycled content for products having recycled content. Include statement indicating costs for each product having recycled content.
3. Provide manufacturer's and or supplier's product Data indicating location of material manufacturer for regionally manufactured, harvested, recovered and extracted materials.

1.6 QUALITY ASSURANCE

A. Sustainability Coordinator: Engage a responsible person on the construction team who is familiar with Sustainable practices and procedures. The Coordinator may also serve as the Waste Management coordinator.

PART 2 – PRODUCTS

Provide and maximize to the greatest extent economically feasible, a combination of salvaged, refurbished, recycled, regional materials within the scope of the project.

PART 3 - EXECUTION

A. SITE DISTURBANCE - Special Site Practices:

1. Construction Activity Pollution Prevention: Comply with City of Austin standard requirements.
2. Protect and restore natural vegetation per division 1 Sections and plans.
3. Replace any removed or destroyed vegetation with equivalent species that are within City guidelines for native and adaptive plants.
4. Restrict construction activity only to defined site limits per plans and avoid activity and practices that would adversely affect environment, property, soils, vegetation and water courses.

END SECTION 01352.4

CONSTRUCTION EQUIPMENT EMISSIONS REDUCTION PLAN
Section 01353

1. GENERAL

1.1. RELATED DOCUMENTS

A. This Section applies to Drawings and all provisions of Contract.

1.2. SUMMARY – CONSTRUCTION EQUIPMENT EMISSIONS PLAN

A. The OWNER, as part of the Council Resolution No. 20100211-019, has decided to take steps to reduce emissions associated with construction process including Nitrogen Oxides (NOx), particulate matter and greenhouse gas. Construction activity is a source of large quantities of particulate matter and ozone forming Nitrogen Oxides that adversely affect the health of our community and the natural environment.

B. The CONTRACTOR shall employ practices and take actions that reduce emissions from NOx, particulate matter (black soot) and greenhouse gases resulting from activities associated with new construction and demolition Projects.

C. The CONTRACTOR shall maximize the use of equipment and vehicles with advanced emission controls in support of the City's goals, utilizing equipment that meets defined EPA emissions standards.

1.3. DEFINITIONS

A. "Construction Equipment" means equipment powered by an internal combustion engine and used for performing or otherwise advancing the Work on the Project, other than motor vehicles intended for use on public highways and registered pursuant to Section 502.002 of the Texas Transportation Code.

B. The list of applicable Construction Equipment includes, but is not limited to excavators, backhoes, loaders, bulldozers, graders, rock saws, generators, and other similar equipment.

C. "EPA" means the United States Environmental Protection Agency.

D. "Low-Use Equipment" means any piece of construction equipment which is used for less than ten (10) hours per week on site for a single construction contract.

E. "Greenhouse Gases" are emissions that absorb and emit radiation within the atmosphere. Greenhouse Gases can be one or a combination of, these gases: carbon dioxide, methane, nitrous oxide and three groups of fluorinated gases (sulfur hexafluoride, hydro fluorocarbons, and perfluorocarbons)

1.4. REQUIREMENTS – Not Used

1.5. SUBMITTALS

A. CONSTRUCTION EQUIPMENT EMISSIONS REDUCTION PLAN:

1. The CONTRACTOR agrees to prepare a draft Emissions Reduction Plan (referred to as PLAN) prior to start of construction. This PLAN shall include an inventory report

containing identifying data for each piece of equipment to be used on the worksite and shall include the following:

- Vehicle/Equipment: Make & Model Year
- Vehicle/Equipment: Engine Make & Model Year
- Vehicle/Equipment: Fuel Type
- Vehicle/Equipment: Expected gallons or hours used for project duration

a) The OWNER will provide Emissions Reduction Toolkit to help the CONTRACTOR in preparation of the PLAN and inventory.

2. The CONTRACTOR shall develop a list of strategies to be used in this Project in order to reduce emissions from NOx, particulate matter and greenhouse gas (CO_2 equivalent). Once prepared, the agreed upon strategies shall be incorporated into the PLAN. The PLAN will then be signed by the CONTRACTOR and made ready for implementation. Implementation progress will be reviewed once a month in regularly scheduled project progress meetings. The PLAN may be modified during construction if changes are made to the Project, but adjustments shall be approved by the OWNER prior to implementation.

3. This PLAN may be used by the Owner's Representative or Inspector to conduct site inspections and/or verify compliance with specification elements.

4. If additional equipment is brought on-site after construction begins, the Contractor shall provide this same inventory information to the Owner's Representative for the new equipment on or before the day it begins work on-site. All additional equipment shall conform to the PLAN.

5. Reports shall be provided for all equipment used on-site.

B. EQUIPMENT EMISSIONS CLOSEOUT DOCUMENTATION:

1. Submit the following prior to final payment:

a) Record of changes made to the original PLAN and reasons.

b) Provide a summary and documentation of strategies used and estimated reductions in fuel & emissions.

c) Provide documentation of amount and % of alternative fuel used.

2. PRODUCTS

Not used

3. EXECUTION

3.1. GENERAL

A. Implement the submitted PLAN. Provide personnel, documentation, equipment, signage, transportation, and other items as required to implement the PLAN during the entire duration of the Contract.

3.2. EQUIPMENT EMISSIONS PLAN IMPLEMENTATION

A. Plan Coordinator (Could be same as superintendent): Designate an on-site person responsible for instructing workers on the Owner's intent to reduce emissions, overseeing implementation and documenting results of the PLAN for the Project.

B. Plan Review: Review the PLAN in monthly progress meeting and include comments in the meeting notes.

C. Instruction: Provide on-site instructions to all subcontractors of emissions reduction methods to be used by all parties for the appropriate activities of the Project.

D. Discuss Owner's goals and requirements at the following meetings:

1. Pre-bid conference.

2. Pre-construction conference.

3. Progress meetings (monthly).

3.3 EQUIPMENT EMISSIONS REDUCTION TOOLKIT

A. Equipment Emissions Reduction Toolkit available at:

1. Website: (http://austintexas.gov/department/capital-improvement-program)

2. City of Austin Public Works Department, Project Management Division, One Texas Center, Suite 900

3. Construction Job Site Office (after contract award)

B. Equipment Emissions Reduction Toolkit consists of:

1. A list of Construction Equipment Emissions Reduction Strategies

2. EPA fuel savings calculator by idling reductions

3. Posting of Anti-idling signs

4. Memorandum of Agreement by Local Area Governments

5. Equipment Inventory Form

3.4 A LIST OF EQUIPMENT EMISSIONS REDUCTION STRATEGIES

The following are suggested emissions reduction strategies and references. As per the specification section 01353, 1.5 Submittals, the CONTRACTOR shall develop a list of strategies to be used in this Project at the start of construction.

C-1 Anti-Idling Strategies:

1. Implement and enforce anti-idling practices for all equipment and vehicles on and adjacent to the site and associated with the project. City will provide a construction site sign and stickers for vehicles and equipment. (http://www.engineoff.org/)

2. Limit all idling of project associated vehicles and equipment operations to five (5) minutes unless the idling is applicable to one or more of the following exceptions:

a) Idling is being used for emergency response purposes;

b) Idling is necessary for component of mechanical operation, maintenance, or diagnostic purposes; or

c) Idling is for the health or safety of the equipment operator.

3. Provide education to all staff, vendors and subcontractors about emissions hazards and anti-idling practices and encourage use of EPA calculator for fuel savings.

4. To the extent possible, do not stop or idle haulage trucks directly under tree limbs and foliage overhanging the street along the haul route. Further avoid such damage from truck exhaust by means of exhaust diversion devices to redirect or diffuse exhaust from being directed in a concentrated manner to tree limbs and foliage.

5. Avoid vehicle loitering or queuing outside or inside the gates of the work area to minimize degradation of localized air quality.

   (http://data.capcog.org/air-quality/engineoff/AntiIdlingBrochure(2).pdf)

   (http://data.capcog.org/air-quality/engineoff/template-1/HowtoOrderSign.html)

   (http://data.capcog.org/air-quality/engineoff/smartwaycalculator.xls)

   (http://austintexas.gov/airquality/)

C-2 Alternative Fuels:

6. Utilize **alternative fuels** including, Texas LED Compliant B20 (or higher) biodiesel, Compressed Natural Gas (CNG), propane and electric. (Refer to EPA Energy Policy Act for full list).

7. Avoid unnecessary fuel use by providing on-site fuelling for alternate fuels.

   (http://www.tceq.texas.gov/airquality/mobilesource/txled/cleandiesel.html)

   (http://www.eere.energy.gov/cleancities)

   (http://lonestarcfa.org)

C-3 Vehicle/Equipment Improvements:

8. Eliminate use of vehicles in tier 0 and 1 categories per EPA and rent or purchase tier 2 and 3 or (4) compliant vehicles.

9. It is recommended that CONTRACTOR takes advantage of the **Texas Emission Reduction Plan (TERP)** grant incentives to upgrade (replace or repower) vehicles with retrofitted emission reduction technologies. (http://www.tceq.texas.gov/airquality/terp/index.html) or (www.terpgrants.com)

10. Utilize **battery powered and/or solar powered equipment** where available. This strategy can be combined with anti-idling strategies by using this technology for sign boards. (evtransportal.org/dieselengineidlereduction.pdf)

C-4 Maintenance Program:

11. Establish a preventative **maintenance program** addressing issues including but not limited to, fuel use, air emissions, tire pressure, smoke from exhaust and noise.

12. Make all efforts to **prevent oil/fuel spillage** on to site surfaces.

C-5 Resource Management:

13. Utilize equipment companies that are located closest to the construction site.

14. Store equipment on site during construction use or arrange for closest overnight storage including **temporary use of the Right of Way** if possible.

15. To the extent possible, CONTRACTOR shall maximize use of **local and regional materials** to reduce transportation emissions.

16. CONTRACTOR shall maximize **salvage and reuse** of appropriate on-site materials. (http://www.usgbc.org/ShowFile.aspx?DocumentID=1095)

17. To the greatest extent possible, stage equipment and vehicles away from, and minimize operation near, sensitive receptors including, but not limited to, operable windows, fresh air intakes, hospitals, schools, licensed day care facilities, residences and areas where people congregate.

END

PART 1 - GENERAL

1.1 Related Documents:

Drawings and general provisions of Contract, including General Conditions, Section 00700,and Supplemental General Conditions, Section 00810, and Division 1 requirements.

PART 2 - PRODUCTS (NOT USED)

PART 3 - EXECUTION

3.1 Office at the Work Site (Job Shack)

During the performance of this Contract, CONTRACTOR shall maintain a suitable office at or near the site of the Work which shall be the headquarters of his superintendent. Any communication given to the superintendent or delivered to CONTRACTOR's office at the site of the Work in his absence shall be deemed to have been delivered to CONTRACTOR.

3.2 Water for Construction

All water required for and in connection with the Work to be performed shall be furnished by and at the expense of the CONTRACTOR through meters installed on hydrants, except for water used in the "disinfection of potable water lines" process per Specification 510.3(29). All water used in the disinfection process shall not be metered, but rather shall be measured by calculation. Such water use does not require a meter, but a double-check valve assembly is required when connecting to a fire hydrant or a City main. CONTRACTOR shall submit a written plan for the disinfection process for review and approval by OWNER prior to commencing Work. The written plan shall include the CONTRACTOR's plan for final flushing and discharge of chlorinated water, and shall specify the quantities of potable water that will be required for the procedure and dosage plan proposed by the CONTRACTOR. Water used in the disinfection process shall be supplied by the OWNER through hydrants or connection through a City main at no charge to the CONTRACTOR for the initial disinfection procedure up to the quantities agreed to in the written plan for the disinfection process. Should the initial disinfection procedure fail to produce acceptable bacteriological sample test results, the cost of water at standard rates used for subsequent disinfection procedures shall be the responsibility of the CONTRACTOR with quantities determined through calculations.

For all water required for and in connection with the Work to be performed other than for the disinfection process, water and meters will be available from OWNER at standard rates. All costs for obtaining a water meter shall be the responsibility of the CONTRACTOR. The CONTRACTOR shall contact the Austin Water Utility and arrange to pick up the meter. CONTRACTOR shall install a double-check valve assembly on the fire hydrant between the hydrant and the meter, to prevent backflow in the event of pressure failure. CONTRACTOR shall supply all necessary tools, hose and pipe, and shall make necessary arrangements for securing and transporting such water and shall take water in such a manner, and at such times, that will not produce a harmful drain or decrease of pressure in the OWNER's water system. It shall be the CONTRACTOR's responsibility to make arrangements with the Austin Water Utility for the metering and reporting of the amount of water used. Water shall not be used in a wasteful manner. Standard hydrant wrenches shall be used for opening and closing of fire hydrants. In no case shall pipe wrenches be used for this purpose. Temporary lines shall be removed when no longer required.

"If applicable, after the installation of the City of Austin's water meter(s) for the Project, the CONTRACTOR has the option to utilize the water available from this service at the

CONTRACTOR's expense. An adjustment to the Contract amount will be made by Change Order at the end of the Project for the costs incurred by the City of Austin for the water."

3.3 Telephone Service

CONTRACTOR shall make all necessary arrangements and pay all installation charges for telephone lines in his offices at the site and shall provide all telephone instruments. The telephone service shall be available to the Owner's Representative for toll free calls.

3.4 Sanitary Facilities

CONTRACTOR shall furnish temporary sanitary facilities at the site, as provided herein, for the needs of all construction workers and others performing Work or furnishing services on the Project.

Sanitary facilities shall be of reasonable capacity, properly maintained throughout the construction period, and obscured from public view to the greatest practical extent. If toilets of the chemically treated type are used, at least one toilet shall be furnished for each 20 employees. CONTRACTOR shall enforce the use of such sanitary facilities by all personnel at the site.

3.5 Protection of Public and Private Property

CONTRACTOR shall protect, shore, brace, support and maintain all underground pipes, conduits, drains, and other underground construction uncovered or otherwise affected by the CONTRACTOR's operations. All pavement, surfacing, driveways, curbs, walks, buildings, utility poles, guy wires, fences, and other surface structures affected by construction operations, together with all sod and shrubs in yards, parkways, and medians, shall be restored to their original condition, whether within or outside the easement/right-of-way. All replacements shall be made with new materials.

CONTRACTOR shall be responsible for all damage to streets, roads, curbs, sidewalks, highways, shoulders, ditches, embankments, culverts, bridges, or other public or private property, which may be caused by transporting equipment, materials, or men to or from the Work, whether by him or his Subcontractors. CONTRACTOR shall make satisfactory and acceptable arrangements with the owner of, or the agency having jurisdiction over, the damaged property concerning its repair or replacement or payment of costs incurred in connection with the damage.

All fire hydrants and water control valves shall be kept free from obstruction and available for use at all times.

3.6 Tree and Plant Protection

All trees and other vegetation which must be removed to perform the Work shall be removed and disposed of by the CONTRACTOR; however, no trees or cultured plants shall be unnecessarily removed unless their removal is indicated on the Drawings. All trees and plants not removed shall be protected against injury from construction operations.

No tree shall be removed outside of permanent easement(s), except where authorized by the E/A. Whenever practicable, CONTRACTOR shall tunnel beneath trees in yards and parking lots when on or near the line of trenching operations. Hand excavations shall be employed as necessary to prevent injury to trees. Care shall be taken with exposed roots, unearthed during construction, so that roots do not dehydrate causing tree damage.

Trees considered by the E/A to have any significant effect on construction operations are indicated on the Drawings and those which are to be preserved are so indicated.

CONTRACTOR shall take extra measures to protect trees designated to be preserved, using methods shown on the Drawings and as specified in Standard Specification Item No. 610S "Preservation of Trees and other Vegetation".

3.7 Security

CONTRACTOR shall be responsible for protection of the site, and all Work, materials, equipment, and existing facilities hereon, against vandals and other unauthorized persons.

No claim shall be made against OWNER by reason of any act of an employee or trespasser, and CONTRACTOR shall make good all damage to the OWNER's property resulting from CONTRACTOR's failure to provide security measures as specified.

Security measures shall be at least equal to those usually provided by OWNER to protect existing facilities during normal operations, and shall also include such additional security fencing, barricades, lighting, and other measures as required to protect the site. When required, the CONTRACTOR shall provide a security plan to the OWNER for review as to appropriateness of the security measures proposed.

3.8 Access Roads

CONTRACTOR shall establish and maintain temporary access roads to various parts of the site as required to complete the Project. Such roads shall be available for the use of all others performing Work or furnishing services in connection with the Project.

3.9 Parking

CONTRACTOR shall provide and maintain suitable parking areas for the use of all construction workers and others performing Work or furnishing services in connection with the Project, as required, to avoid any need for parking personal vehicles where they may interfere with public traffic, the OWNER's operations, or construction activities.

3.10 Dust Control

Dust Control during construction of this Project shall conform to Standard Specifications Item No. 220S, “Sprinkling for Dust Control". No direct payment will be made for dust control. Dust Control shall be considered subsidiary work relating to various Bid items of the Contract.

3.11 Temporary Drainage Provisions

CONTRACTOR shall be responsible for providing for the drainage of stormwater and such water as may be applied or discharged on the site in performance of the Work. CONTRACTOR shall obtain E/A approval for temporary drainage facilities which will handle, carry through, or divert around his Work all drainage flow, including storm flow and flows created by construction activity, to prevent silting of waterways or flooding damage to the property and adjacent property.

3.12 Erosion Control

CONTRACTOR shall prevent erosion of soil on the site and adjacent property resulting from his construction activities. Effective measures shall be initiated prior to the commencement of clearing, grading, excavation, or other operations which will disturb the natural protection.

CONTRACTOR shall use controls found in "Environmental Criteria Manual" or developed from successful techniques elsewhere as approved by E/A. Siltation and/or sedimentation controls shall include dams, berms, and dikes as recommended in the "Environmental Criteria Manual".

3.13 Pollution Control

CONTRACTOR shall prevent the pollution of drains and watercourses by sanitary wastes, sediment, debris and the substances resulting from construction activities. No sanitary wastes will be permitted to enter any drain or watercourse. No sediment, debris or other substance will be permitted to enter sanitary sewers and reasonable measures shall be taken by CONTRACTOR to prevent such materials from entering any drain or watercourse.

CONTRACTOR shall observe the rules and regulations of the State of Texas and agencies of the U.S. Government prohibiting the pollution of any lake, stream, river, or wetland by the dumping of any refuse, rubbish, dredge material, or debris therein.

CONTRACTOR is specifically cautioned that disposal of materials into any water of the State must conform to the requirements of the Texas Commission on Environmental Quality (TCEQ), and any applicable permit from the U.S. Army Corps of Engineers.

3.14 Noise Control

CONTRACTOR shall comply with the City of Austin's Noise Ordinance. CONTRACTOR shall take reasonable measures to avoid unnecessary noise. Such measures shall be appropriate for the normal ambient sound level in the area during working hours. All construction machinery and vehicles shall be equipped with practical sound-muffling devices, and operated in a manner to cause the least noise consistent with efficient performance of the Work.

3.15 CIP Sign

CONTRACTOR shall erect install and maintain CIP signs as specified. Signs shall be constructed in accordance with City Standard Specification Item No. 802S "Project Signs," as indicated on the Drawings.

3.16 Fences

All existing fences affected by the Work shall be maintained by the CONTRACTOR until completion of the Work. Fences which interfere with construction operations shall not be relocated or dismantled until written permission is obtained from the owner of the fence, and the period the fence may be left relocated or dismantled has been agreed upon. Where fences must be maintained across any construction easement, adequate gates shall be installed. Gates shall be kept closed and locked at all times when not in use.

Upon completion of the Work across any tract of land, CONTRACTOR shall restore all fences to preconstruction, or to a better, condition and to their preconstruction location.

3.17 Mail Boxes

CONTRACTOR shall remove, reset temporarily, and relocate permanently all mail boxes that are within construction site limits conforming to requirements of United States Postal Service. Mailboxes shall not be laid on the ground, but shall be temporarily reset the same day as removed. Payment for removing and resetting of mail boxes will not be paid for directly, but will be considered subsidiary to the various Bid items. Any damage to mail boxes or posts shall be the responsibility of the CONTRACTOR.

3.18 Emergency Facilities

Free access shall be maintained at all times to fire lanes and emergency and utility control facilities such as fire hydrants, fire alarm boxes, police call boxes, and utility valves, manholes, junction boxes, etc. In the event that it is necessary to make one of these facilities temporarily inaccessible, CONTRACTOR shall obtain approval of such action and schedule of Work from the OWNER. CONTRACTOR shall also provide at least 24 hours prior notice to the Fire Department, Police Department, and City Department governing the affected utility. The same Department(s) shall be promptly notified by the CONTRACTOR when such facilities are placed back in unobstructed service.

3.19 Notification of Owners

Unless otherwise indicated, the OWNER will notify property owners abutting the right-of-way of impending construction. The CONTRACTOR shall exercise diplomacy and tact with individual property owners.

3.20 Maintenance of Traffic

CONTRACTOR shall conduct his Work to interfere as little as possible with public travel, whether vehicular or pedestrian. Whenever it is necessary to cross, obstruct, or close roads, driveways, and walks whether public or private, the CONTRACTOR shall provide and maintain suitable safe bridges, detours or other temporary measures to accommodate public and private travel, and shall provide reasonable notice to owners of private drives before interfering with them. Such maintenance of traffic will not be required when CONTRACTOR has obtained written permission from the owner and the tenant of the private property, or from the authority having jurisdiction over public property involved, to obstruct traffic at the designated point. A copy of the initial written permission shall be provided to the Owner's Representative.

Safety and conveyance of traffic shall be regarded as prime importance. Unless otherwise directed, all portions of streets associated with this Project shall be kept open and provided a dust free, smooth and comfortable ride to traffic. It shall be the responsibility of the CONTRACTOR to ensure that two-way traffic may safely bypass the construction site and that access is provided to abutting private property. In making open cut street crossings, the CONTRACTOR shall not block more than one-half of the street at one time without approval of the OWNER. Whenever possible, CONTRACTOR shall widen the shoulder on the opposite side to facilitate traffic control. Temporary surfacing shall be provided as necessary on shoulders.

Prior to beginning Work, CONTRACTOR shall designate, in writing, a competent person who will be responsible and available on the Project site, or in the immediate area, to ensure compliance with the traffic control plan. CONTRACTOR shall provide documentation to demonstrate the sufficient training in Traffic Control for his competent person. Owner will designate a qualified person to observe implementation and who will have authority to assure compliance with the traffic control plan.

The CONTRACTOR shall perform the necessary cleanup and finishing immediately after all or a portion of the Work is completed. When the Work includes paving operations, the entire site shall be kept clean to facilitate placement of required traffic control devices. Temporary and permanent striping lay-out shall be approved by the Transportation Department prior to placement, when included in the Work.

1. Detours

Where indicated on the traffic control plan CONTRACTOR shall erect and maintain detours around construction activities. Should CONTRACTOR desire to propose a detour, not already included in the traffic control plan, it shall be his responsibility to prepare a revised traffic control plan showing the detour, and obtain approval of the revised traffic control plan from the Transportation Department, prior to implementation of the detour. The Transportation Department has final authority as to the acceptability of any proposed revisions to the traffic control plan. The CONTRACTOR shall bear all costs for revising the traffic control plan and for maintaining the proposed detour.

2. Barricades and lights

CONTRACTOR shall place and maintain in good condition, standard barricades at each end of the Project and at other locations where traffic is rerouted or blocked from using regular traffic lanes. Barricades and warning signs shall be in accordance with the Texas Manual on Uniform Traffic Control Devices (MUTCD) and City of Austin Standard Specification Item No. 803S, "Barricades, Signs and Traffic Handling". Signs, barricades, and warning devices informing the public of construction features will be placed and maintained by the CONTRACTOR, who shall be solely responsible for their maintenance. The decision to use a particular device at a particular location as indicated in the traffic control plan or as determined by the CONTRACTOR, shall be the sole responsibility of the CONTRACTOR.

All open trenches and other excavations shall have suitable barricades, signs, and lights to provide adequate protection to the public. Obstructions, such as material piles and equipment shall be provided with similar warning signs and lights.

All barricades and obstructions shall be illuminated with warning lights from sunset to sunrise. Material storage and conduct of the Work on, or along side, public streets and highways shall cause a minimum obstruction and inconvenience of the traveling public.

3.21 Required Job Site Postings and Notices

CONTRACTOR shall post the following postings and notices in English and Spanish at one or more conspicuous locations on the job site. In the case of Projects with multiple sites, the notices and postings must be displayed at each site. In the case of Projects that do not have a job shack or other temporary facility on the site, CONTRACTOR shall post all notices on a temporary bulletin board. Other special conditions are noted below.

Required for all Projects	
Poster	Available at:
Baseline Schedule for Project identifying when all subcontractors will be used	N/A (as required under Section 00700, paragraph 2.4.2.1.)
Wage Rates as required under Section 00830.	Section 00830BC and/or Section 008300HH
City of Austin Wage Contact posters	Provided at Pre-Construction meeting (English and Spanish)
City of Austin Equal Employment Opportunity posters	http://austintexas.gov/department/wage-compliance (English and Spanish)
Texas Commission on Environmental Quality "Construction Site Notice" form, if applicable, as required or the required TPDES information	http://www.tceq.state.tx.us/assets/public/permitting/waterquality/attachments/stormwater/txr152d2.pdf (Option 1 – as required under Section 00810, 6.7.4.2 N/A (Option 2 – as required under Section 00810, 2.6.7.4.3)
OSHA poster "Job Safety and Health: It's the Law"	http://www.osha.gov/Publications/osha3165.pdf (English) http://www.osha.gov/Publications/osha3167.pdf (Spanish)
City of Austin Rest Break Ordinance Signs	http://austintexas.gov/department/wage-compliance (English and Spanish) As required to be posted in English and Spanish under Ordinance No. 20100729-047
Texas Payday Law Poster	http://www.twc.state.tx.us/ui/lablaw/ll10.pdf (English) http://www.twc.state.tx.us/ui/lablaw/ll10s.pdf (Spanish)
Texas Workers Compensation notice that the employer does or does not carry Workers Compensation insurance	Does not carry Workers Compensation Insurance: http://www.tdi.state.tx.us/forms/dwc/notice5.pdf (English) http://www.tdi.state.tx.us/forms/dwc/notice5s.pdf (Spanish) Does carry Workers Compensation Insurance: http://www.tdi.state.tx.us/forms/dwc/notice6.pdf (English) http://www.tdi.state.tx.us/forms/dwc/notice6s.pdf (Spanish)
TWC Employer's Notification of the Ombudsman Program to Employees	http://www.oiec.state.tx.us/documents/Employer_Notice_of_O.pdf (both versions)
DOL – The Uniformed Services Employment and	http://www.dol.gov/vets/programs/userra/USERRA_Private.pdf

Reemployment Rights Act (USERRA)	
EEOC Equal Employment Act and the Americans with Disabilities Act (ADA)	http://www.dol.gov/ofccp/regs/compliance/posters/pdf/eeopost.pdf (English) http://www.dol.gov/ofccp/regs/compliance/posters/pdf/eeosp.pdf (Spanish)
Fair Labor Standards Act (FLSA) Minimum Wage Poster	http://www.dol.gov/whd/regs/compliance/posters/flsa.htm (English) http://www.dol.gov/whd/regs/compliance/posters/flsaspan.htm (Spanish)
If applicable: Employee Rights for Workers with Disabilities/Special Minimum Wage Poster – Employment Standards	http://www.dol.gov/whd/regs/compliance/posters/disabc.pdf http://www.dol.gov/whd/regs/compliance/posters/disabspanc3p.pdf
"Your Rights Under the Family and Medical Leave Act (FLMA)"	http://www.dol.gov/whd/regs/compliance/posters/fmlaen.pdf (English) http://www.dol.gov/whd/regs/compliance/posters/fmlasp.pdf (Spanish)
Title VI Rights Poster	http://austintexas.gov/department/wage-compliance
Additional Postings Required for Federally Funded Projects	
"Employee Rights Under the Davis-Bacon Act"	http://www.dol.gov/whd/regs/compliance/posters/fedprojc.pdf (English) http://www.dol.gov/whd/regs/compliance/posters/davispan.pdf (Spanish)
Applies to USDOT/FHWA funded projects: "Notice of False Statements Concerning Highway Projects"	http://www.mdt.mt.gov/publications/docs/forms/dbe/eeo_board/false_statements.pdf (as required in Section 00810A Standard Federal-Aid Assurances)
Applies to USDOT/FHWA funded projects; "Contractors EEO Policy"	N/A (as required in Section 00810A Standard Federal-Aid Assurances)

END

SECTION 01505.2

Non-Building Projects using Non-Building Baseline Sustainability Criteria (Minimal Waste)

PART 1 – GENERAL

1.1 Related Documents

1. Division 01 Section 01200 "Project Meetings"
2. Division 01 Section 01352 “Sustainable Construction Requirements”
3. Division 01 Section 01353 “Construction Equipment Emissions Reduction Plan”
4. Division 01 Section 01500 “Temporary Facilities”

1.2 SUMMARY

A. The Owner has established that the Project shall minimize the creation of construction and demolition waste on the Project site and shall recycle and/or salvage non-hazardous construction, demolition, and land clearing debris to divert waste from Landfills.

1. Contractor shall minimize factors that contribute to waste such as over packaging, improper storage, ordering error, poor planning, breakage, mishandling, and contamination.
2. Contractor shall reuse, salvage, or recycle as many of the non-hazardous waste materials as economically feasible.
3. All profits resulting from salvaging and recycling shall go to the Contractor.
4. Where there is little to no cost difference between recycling/salvaging and land-filling of items, the Contractor is directed to recycle/salvage.

B. Hazardous materials are an exception to this Section. Comply with applicable requirements of Local, State and Federal regulations.

C. This Section includes administrative and procedural requirements for recycling, salvaging and disposing of non-hazardous demolition and construction waste

1.3 REFERENCES

A. The standards listed below form a part of this Section to extent referenced. Standards are referred to in the text by basic reference only.

1. Sustainable Building Sourcebook – Austin Energy Green Building:www.austinenergy.com/Energy%20Efficiency/Programs/Green%20Building/Sourcebook/constructionWasteManagement.htm

2. Resource Exchange Network for Eliminating Waste (RENEW), TCEQ (MC-112), Biannual catalog lists materials available and wanted; serves Texas and surrounding states; lists are posted on the Internet: http://www.tceq.state.tx.us/assistance/P2Recycle/renew/renew.html

3. Recycle Texas Online, A service of the Texas Commission on Environmental Quality. Contains information on about 1000 businesses and local governments handling materials from Texas. Organizations' information is self-reported and listings are free of charge. www.tceq.state.tx.us/assistance/P2Recycle/rtol/rtol.html

4. "WasteSpec", Triangle J Council of Governments, Research Triangle Park, NC 27709, (919) 549-9390.

1.4 DEFINITIONS

A. Chemical Waste: Includes petroleum products, bituminous materials, salts, acids, alkalis, herbicides, pesticides, organic chemicals, and inorganic wastes.

B. Clean: Untreated, unpainted, not contaminated with oils, solvents, caulk, or other materials.

C. Disposal: Acceptance of solid wastes at legally permitted and operating facility for the purposes of land-filling.

D. Diversion: Avoidance of demolition and construction waste sent for disposal to landfill or incineration. Diversion does not include using materials for landfill, alternate daily cover on landfills, or materials used as fuel in waste-to-energy processes.

E. Hazardous Waste: Byproducts of society that can pose a substantial or potential hazard to human health or the environment when improperly managed, and possessing at least 1 of 4 of the following characteristics, or appearing on a special Environmental Protection Agency (EPA) list.

1. Ignitability.
2. Corrosivity.
3. Reactivity.
4. Toxicity.

F. Landfill: Authorized land waste disposal site that is located to minimize waste pollution from runoff and leaching.

G. Recycling: The process of sorting, cleansing, treating, and reconstituting solid waste and other discarded materials for the purpose of using the altered form. Recycling does not include burning, incinerating, or thermally destroying waste.

H. Return: To give back reusable items or unused products to vendors for credit.

I. Reuse: A strategy to return materials to active use in the same or a related capacity.

J. Salvage: To remove a waste material from the Project site to another site for resale or reuse by others.

K. Source Separation: The act of keeping different types of waste materials separate beginning from the first time they become a waste.

L. Toxic: Poisonous to living beings either immediately or after a long period of exposure.

M. Trash: Any product or material unable to be reused, returned, recycled, or salvaged.

N. Waste: Extra material or material that has reached the end of its useful life in its intended use. Waste includes all materials removed from the Project site to be land-filled, recycled, or salvaged for reuse. Pallets, containers, packaging and packing materials in which construction products are delivered to the Project site are considered waste materials.

1.5 WASTE MANAGEMENT GOALS

A. The Owner has established that at least 50% of the "waste" materials produced as a result of the Work, shall be employed, salvaged, reused, or recycled in order to minimize the impact of construction and demolition waste on landfills and reducing disposal costs.

B. Contractor shall employ and encourage practices that ensure the generation of as little waste as possible due to error, poor planning, breakage, mishandling, contamination, or other factors.

C. Contractor is responsible for knowing and complying with regulatory requirements, including but not limited to Federal, State and local laws and regulations, pertaining to legal disposal of all construction waste materials.

D. Contractor shall recycle and divert materials for secondary uses whenever economically feasible.

E. Acceptable methods of diversion include:
Recycling, reuse and salvage
Donation to nonprofit organizations
Removal from jobsite by staff or subcontractors for use (not disposal)
Return to supplier
Sale to organizations or individuals

F. The Contractor shall develop a Construction and Demolition Waste Management Plan that results in end-of-Project rates for recycle and/or salvage of at least 50% of non-hazardous construction and demolition waste. The plan shall identify the materials to be diverted from disposal and define the materials to be separated on-site or off-site. Calculations can be done by weight or volume, but must be consistent throughout.

1.6 SUBMITTALS

A. ***Waste Management Plan:*** A Project-specific plan for the collection, transportation, and disposal of the waste generated at the construction site, shall be submitted for approval within 14 calendar days after date of the Notice to Proceed, or prior to any waste removal, whichever occurs first. The approved Plan shall be distributed to all subcontractors and the owner and will not relieve the Contractor's responsibility for compliance with applicable environmental regulations.

An example template is included as "Appendix A" to this section.

1. The Waste Management Plan shall include the following:

a. Identify each type of waste material produced as a result of the Work on the Project Site.

b. Identify each type and quantity of demolished and waste material intended to be recycled, salvaged or reused.

c. Identify material separation requirements.

e. Identify location of temporary on-Site storage for recycled and reused materials.

f. Identify final destination means of transportation for each recycled and reused material.

h. Identify the name/phone number of the Contractor's on-site coordinator of the Waste Management Plan.

i. Indicate permit or license and the location of the municipal solid waste landfills and other disposal area(s) to be used.

j. List of materials that cannot be recycled or reused.

B. ***CWM Closeout Documentation:*** Submit the following upon the completion of The Work and prior to final payment:

a. A Summary of Solid Waste Disposal and Diversion (refer example template "Appendix B") prepared and maintained through Project duration, demonstrating that 100% of all non-hazardous construction wastes were recycled, salvaged or disposed of properly and includes as a minimum the following information:

1. Dates
2. Materials Description
3. Materials Quantity
4. Indicate whether recycled, salvaged, reused or sent to landfill for disposal.
5. Name and location of accepting facility.
6. Destination

b. Copies of all receipts, manifests, weight tickets, and other documentation that identify all materials recycled, salvaged, land-filled or incinerated.

PART 2 - PRODUCTS

Not used

PART 3 – EXECUTION

3.1 GENERAL

A. Implement the Waste Management Plan as approved by the City of Austin Project Manager. Provide handling, containers, storage, signage, transportation, and other items as required to implement Waste Management Plan during the entire duration of the Contract.

B. Satisfy the requirements outlined in Subsection 1.5, Waste Management Goals.

3.2 WASTE MANAGEMENT PLAN IMPLEMENTATION

A. Plan Coordinator: Designate an on-site party (or parties) responsible for instructing workers, overseeing implementation and documenting results of the Waste Management Plan for the Project.

B. Plan Distribution: Provide copies of the Waste Management Plan to the Contractor's superintendent, each Subcontractor, the Owner, and the Engineer.

C. Meetings: Include Construction Waste Management in progress meetings to maintain the Plan for achieving the owners waste management goals:

D. Carefully order materials to avoid over supply.

E. Protect materials from contamination during handling, storage and transport to meet the requirements of the accepting facilities.

F. The Contractor shall assign and label a specific area to facilitate separation of materials for potential recycling, salvage, reuse, return and disposal. This area shall be kept neat and clean and clearly marked in order to avoid contamination of materials.

3.3 RECYCLING REQUIREMENTS

A. Materials: In general, the following types of construction waste materials generated during the course of this project that are not salvaged shall be recycled:

a. Asphalt concrete pavement.

b. Concrete materials.

c. Metals, including the following.

i. Banding straps.
ii. Reinforcing steel.
iii. Iron.
iv. Brass and bronze.
v. Lead.
vi. Extruded aluminum.
vii. Aluminum sheet.
viii. Stainless steel sheet.
ix. Steel studs.
x. Copper pipe.
xi. Steel pipe.
xii. Galvanized steel pipe.

d. Clean dimensional lumber.

e. Wood crates and pallets.

f. Glass and glass containers.

g. Plastics.

h. Plumbing fixtures.

i. Electrical conduit.

j. Electrical wiring.

k. Cardboard, paper, and packaging.

l. Beverage containers.

B. Methods: The following recycling methods, or a combination of, may be used.

1. On-site separation: Each material to be recycled shall be separated at the Project site and delivered to the recycling markets or directly from the Project site.

   a. If on-site separation method is used, designate a specific area or areas to facilitate separation of materials for potential reuse, salvage, recycling, and return.

   b. Maintain recycling and waste bin areas neat and clean and clearly marked, both in Spanish and in English, in order to avoid co-mingling of materials.

   c. Protect materials from contamination.

2. Off-site separation: Materials to be recycled are delivered unsorted from the Project site to a materials recovery facility or transfer station where recyclable materials are separated from other waste.

   a. Contractor shall verify that the entity responsible for the off-site separation has a market for all materials required to be recycled from the Project site.

   b. The same Submittals procedures shall apply.

c. Protect materials from contamination.

3.4 REUSE

A. Contractor is encouraged to reuse as many demolished and waste materials as possible.

B. Reuse of waste materials includes the following:

a. Salvaging materials scheduled for disposal.

b. Off-Site storage of waste materials for future reuse by Contractor on other projects.

c. Returning unused and reusable materials, packaging and pallets, to vendor.

e. Assemble designated reuse items in a single location safe from damage, for review and approval by the owner's representative.

3.5 SALVAGE

A. Salvage materials as identified on the Engineering Plans.

B. Salvage Guidelines:

1. The contractor shall salvage as many items as deemed economically possible, considering reduction of land filling fees and possible use by others.
2. Assemble potentially salvageable items in one area and donate or sell to the public after review by the City of Austin Project Manager.
3. All proceeds from the sale of salvaged items shall go to the contractor.

Appendix A. Sample Construction Waste Management Plan

Construction Waste Management Plan

Project:
Contractor:
Date:
Contact:
Phone:
Prepared by:

Diversion Goal: Recycle, reuse and/or salvage at least 50% *(by weight or volume) of land-clearing and construction waste*

I. Coordination and Training

a. Name of Contractor's representative responsible for CWM implementation & coordination.

b. Describe method(s) of waste recycling management – on-site and/or off-site.

c. Describe how Contractor's staff and subcontractors will be informed regarding proper recycling and separation procedures

d. Describe and/or show on an attached site map where the temporary waste material storage area(s) will be located, and how will contamination of separated waste materials will be prevented?

II. Waste Minimization

a. What waste minimization techniques will be employed during the construction phase?

_____
_____
_____
_____

b. Which employees and / or subcontractors will be involved with each technique?

_____
_____
_____
_____

III. Construction Waste Analysis (including site / land-clearing materials, as applicable)

a. ***Diverted Materials***: For each material anticipated to be reused or recycled (diverted from the landfill) to meet the minimum 50% diversion goal, provide information to complete the table below. (Note: Whenever possible, attempt to use or donate construction waste materials rather than recycling.)

Material or Item	Storage Method (roll-off, bin, area, on pallet, etc.)	Quantity estimate (no., linear ft., square ft., etc.)	Proposed Recipient

Add rows (or paper pages) as required

b. ***Landfill***: For construction phase trash and materials / items that will not be diverted, complete the following table:

Quantity estimate (weight or volume)	Number and size of roll offs anticipated	Proposed landfill site

Appendix B. Summary of Solid Waste Disposal and Diversion

Project name _____ Project Number _____
Contractor Name _____ License Number_____
Contractor Address_____

Solid Waste Material	**Recycled, Reused, salvaged or disposed**	**Date Material Disposed** or diverted	**Amount Disposed/ Diverted** (Ton or cubic yd.)	**Municipal Solid Waste Facility** (Name, address, Phone)	**Recycling/Reuse Facility** Name Address Phone	**Comment** (If disposed state why not diverted)
Vegetation						
Soil						
Trench spoils						
Rock						
Asphalt						
Concrete						
Metal						
Wood						
Debris						
Glass						
Trash						
Other						

Signature _____ Date _____

Page / of / total pages

END SECTION 01505.2

PART 1 - GENERAL

1.1 Related Documents:

Drawings and general provisions of Contract, including General Conditions, Section 00700, and Supplemental General Conditions, Section 00810, and Division 1 requirements.

PART 2 - PRODUCTS (NOT USED)

PART 3 - EXECUTION

3.1 General

CONTRACTOR shall maintain reasonable local vehicular and pedestrian dust free traffic, including use of driveways, to proceed safely with minimum inconvenience, except during actual construction operations. CONTRACTOR provided flaggers shall assist traffic when a street is operating under a single lane. Two-way traffic shall be maintained at all other times unless otherwise authorized by Owner.

CONTRACTOR shall provide, at the work zone location during temporary traffic control installation, a designated Competent Traffic Control Person to ensure compliance with the traffic control plans and the provisions of the Contract. Training Certificates for the designated Competent Person shall be provided with submittals at the Precon. Training certificates for competent persons shall be good for four (4) years from the date of training. After such time the competent person must show that additional training or re-certification has been completed to maintain competent person status.

CONTRACTOR shall maintain a smooth and safe ride for traffic by placing steel plates with Asphaltic concrete berms, temporary fill or bridging and temporary surfacing with cold or hot-mix Asphaltic concrete paving in accordance with applicable City Standards.

Sidewalks shall not be obstructed, except by special permission of Owner or E/A. Access to private dwelling and to commercial establishments shall be provided at all times.

CONTRACTOR shall plan and execute his operations in a manner that will cause a minimum interference with traffic. The CONTRACTOR shall place and maintain in good condition, standard barricades at each end of the Project and at other locations where traffic is rerouted or blocked from using regular traffic lanes. Barricades and warning signs shall be in accordance with Texas Manual on Uniform Traffic Control Devices (MUTCD) and the City of Austin Transportation Criteria Manual.

Signs, barricades and warning devices informing public of construction features shall be placed and maintained by the CONTRACTOR who shall be solely responsible for their maintenance.

Unless otherwise specified elsewhere in Division 1, neither explosives nor blasting shall be permitted on this Project.

3.2 Traffic Control

3.2.1 It shall be the sole responsibility of the CONTRACTOR to furnish, install, maintain and remove barricades, detour signs, warning signs, lights and all regulatory traffic control devices of the size and type specified, at locations indicated, or as directed or approved by the OWNER in accordance with the Texas Manual on Uniform Traffic Control Devices, (MUTCD), Part VI, Traffic Control for Street and Highway Construction and Maintenance Operations and the City of Austin Transportation Criteria Manual. Upon phase completion, the Contractor shall immediately revise the

temporary traffic devices to reflect the next phase or if the project is complete remove them from the public right of way.

3.2.2 Throughout the life of the Contract, all existing roads and Traffic Control devices included in the Work shall be maintained by the CONTRACTOR to a condition, in the opinion of the OWNER, which is equal to or better than that which existed when Work commenced. Maintenance of existing roads and devices shall take priority over all other Work items and shall be subject to a seven-day-a-week, 24-hours-per-day time frame. The CONTRACTOR shall provide a smooth and safe riding surface for all vehicles along the route of this Project. This could include, but not be limited to, small cars, motorcycles, mopeds and bicycles. If the condition of the street surface deteriorates, for any reason, CONTRACTOR shall take necessary steps to insure immediate restoration.

3.2.3 During construction of streets, drainage, and utility projects, if conditions of existing street surface require maintenance to upgrade from their state when the Work began, a separate pay item may be included in Bid. Otherwise, maintenance work will not be paid for directly but will be considered subsidiary to various Bid items of this Contract.

3.2.4 In the event that CONTRACTOR fails, in opinion of OWNER, to maintain a smooth surface for public comfort, fails to provide ingress and egress to private property, and/or does not provide and maintain proper traffic control devices, OWNER may provide these services and deduct any cost thereof, including overtime and administrative expenses, from all estimates thereafter due the CONTRACTOR. Such action by the OWNER shall not relieve the CONTRACTOR of his liability to protect the public at construction site. Owner may also assess an investigation fee, as established by separate Fee Ordinance, for violations resulting in more than one deficiency report issued to Contractor.

3.2.5 A permit must be obtained from Texas Department of Transportation (TxDOT), prior to Work being performed on state highway routes passing through the City.

3.2.6 CONTRACTOR shall notify the Owner's Representative, Police Department, Fire Department, EMS, and Right of Way Management Division at least seven Calendar Days in advance of beginning proposed Work, with intention to close or partially block any street or any part thereof, or of any construction affecting free flow of traffic. The CONTRACTOR shall plan and adequately provide barricades and warning devices. The same parties shall be notified when normal traffic flow is restored.

3.2.7 Should the CONTRACTOR, in his operations, reduce an existing two-way roadway to less than 20 feet in width, CONTRACTOR shall provide a route through or around the narrowed area as approved by Owner or E/A.

3.2.8 The CONTRACTOR's Flaggers shall be required any time it is necessary for the CONTRACTOR's equipment to move into or across an open traffic lane, or at other such times as directed by the Owner's Representative. A flagger shall be utilized to aid exit of hauling equipment from open traffic lanes to the Work area, and entry of hauling equipment from Work area to open traffic lanes. Flaggers shall be dressed and conduct operations in accordance with Texas Manual on Uniform Traffic Control Devices and the Transportation Criteria Manual. Flagging operations shall be the sole responsibility of the CONTRACTOR.

3.2.9 The CONTRACTOR and Subcontractors shall confine their activities to the immediate area of the construction site and provide the following:

a. Appropriate temporary fences, barricades, and/or Metal Beam Guard Fence if required, for site work involving excavation, utility extensions, remote construction work or other circumstances involving safety of public or protection of the work in progress.

b. Warning lights at open trenches, excavations, etc., during hours from dusk to dawn each day. Protection of structures, utilities, sidewalks, pavements, and other facilities immediately adjacent to excavations, from damages caused by settlement, lateral movement, undermining, washout and other hazards.

3.3 Spoil Disposal

CONTRACTOR may make other arrangements for spoil disposal subject to E/A evaluation of the CONTRACTOR-supplied proof that the Owner(s) of the proposed site(s) has a valid fill permit issued by the appropriate governmental agency. Finally, the CONTRACTOR shall submit a haul route plan including a map of the proposed route(s) for the E/A and Owner's approval.

3.4 Restoration

WATER AND WASTEWATER CONSTRUCTION REQUIREMENTS

3.4.1 In order to minimize environmental and potential flood impacts, the sum of the amount of trench opened in advance of the completed line and the amount of trench left unfilled at any time shall be restricted to one (1) full block or 300 linear feet, whichever is less.

3.4.2 Restoration shall be an on-going process during construction operations and shall immediately precede completion of construction of each successive section of the line, which shall not exceed 1,200 linear feet without approval of the E/A.

3.5 Street Markers and Traffic Control Signs

It shall be responsibility of the CONTRACTOR to remove, preserve and reset, as required, Street Marker and Traffic Control Signs that are within construction limits to the line and heights as described in Texas Manual on Uniform Traffic Control Devices before any sidewalks or street excavation is begun. Signs shall not be laid on the ground. No payment will be made for this work but shall be considered subsidiary to the various Bid items. Traffic Sign Activity Section of the Transportation Department (457-4850) shall be notified a minimum of five Working Days prior to completion of the Project so that signs may be checked for damage. Any damage to signs or posts shall be paid for by the CONTRACTOR.

3.6 Burning Permit

Open burning within City limits will not be allowed. Trench burning shall require a permit from the Fire Marshal. Burning permits outside City limits shall be obtained from the appropriate authority.

The CONTRACTOR shall secure and pay for all burning permits.

3.7 Driveways

Unless otherwise indicated, the approach grade of existing driveways shall be modified as indicated and as directed by the Owner's Representative. The OWNER will contact property owners whose driveways require grade modification beyond street right-of-way and the OWNER will obtain their concurrence for approach grade modification. Within the right-of-way, all driveways shall be replaced with concrete driveways. Outside the right-of-way, when approach grade modifications are required, flexible base shall be placed by the CONTRACTOR to resurface existing dirt or gravel driveways; asphalt and concrete drives shall be replaced in kind by the CONTRACTOR. Excavation, Flexible Base, Portland Cement Concrete and Asphaltic Concrete, used for driveways as prescribed above shall not be measured for payment but shall be considered subsidiary to various Bid items in the Contract unless payment is included as a separate Contract pay item.

3.8 Removal or Relocation of Fences and Sprinkler Systems

Removal or relocation of privately owned fences and sprinkler systems not specified in Bid, and within public right-of-way is the primary responsibility of the property owner. OWNER will cause property owners to be aware of any known conflicts and encourage them to make desired adjustments in advance of construction. In the event the property owner does not, or will not, make adjustments necessary for construction of improvements to be made under this Contract, CONTRACTOR, after receiving written approval from the OWNER, shall remove those portions that interfere with the Work, as follows:

3.8.1 Fences shall be disassembled, by hand, into hand manageable sizes and placed on the private property.

3.8.2 For sprinkler systems, the CONTRACTOR, after assuring that electrical and/or mechanical controls are disconnected, shall remove sprinkler heads, valves, controls, and any other miscellaneous items, including distribution pipe, or wire, saw cut from the system. The CONTRACTOR shall present these materials to the property owner. Where piping is cut, the pipe shall be permanently capped or plugged, unless otherwise directed by the OWNER.

Work for removal or relocation of fences and sprinkler systems shall not be paid for directly but shall be subsidiary to the various Bid items.

End

AIRPORT SECURITY REQUIREMENTS

PART 1 – GENERAL

1.1 RELATED DOCUMENTS

A. Drawings and General Provisions of the Contract, including General Conditions and Supplemental General Conditions and Division 1 Specification Sections, apply to work of this Section.

1.2 SUMMARY

A. This section outlines security responsibilities for Contractors and Subcontractors at Austin-Bergstrom International Airport (ABIA).

B. In this document, Project Manager is defined as designated Owner Representative.

C. Due to the ever changing environment of Airport security, requirements may change at any time.

1.3 RESTRICTED AREAS ACCESS POLICIES

Unescorted Access: Individuals with an operational need for unescorted access into restricted areas (Sterile Area, Secured Area and/or Air Operations Area) of the airport shall submit to a fingerprint-based ten-year criminal history records check (CHRC) and Security Threat Assessment (STA). If the process confirms no disqualifying criminal offenses, the Department of Aviation (DOA) Security and ID Office may issue a security access badge. **Applicant fees to request an ABIA Security Identification Badge are $78 each, which is typically waived for contractors or personnel providing work or services under a contract agreement with the City of Austin.**

Escorted Access: Each person acting as an escort must inform all individual(s) being escorted that they are in a security area of the airport and all security rules and regulations must be followed. The escort is required to be able to, at all times until the escorted individual has left the security area, physically control the escorted individual(s)' movement when escorted in the Secured Area and visually control the escorted individual(s) movement when escorted in the AOA and Sterile Area. Only individuals with current unescorted access authority are permitted to escort. Those who have authority to escort will have the designated silver background with (AUS) Sticker which gives them the authority to escort. The maximum number of individuals who can be escorted is three (3). ABIA escort procedures are described in **"Escort Procedures and Authorization Form"**. (Attachment 1)

An un-badged person can be escorted no more than three (3) working days total, unless noted otherwise herein. The three (3) working days can be consecutive or cumulative. If an un-badged person begins the badging process, they can be escorted as long as it takes to receive badge authorization. If a badge is denied, they can no longer be escorted. If an un-badged person needs to be escorted more than three (3) working days because it is a short-term work assignment, the badged person doing the escort must request an exception from the Security Office, a minimum of three (3) working days in advance. If approved, the unbadged person can be escorted up to ten (10) working days total, consecutive or cumulative. If an un-badged person decides to get badged within the four-to-ten (4-10) working day time frame, they can be escorted as long as they are in the badging process. If a badge is denied, they can no longer be escorted. Under special circumstances, it may be prudent to allow escorting more than ten (10) working days. In those cases, the badged person doing the escort may request an exception from the Airport Security Coordinator (ASC), a minimum of three (3) working days in advance. It is at the discretion of the ASC or ASC's designee whether the limited use of this exception is warranted.

A ***"Special Escort Notification"*** (Attachment 2) may be utilized in instances where more than 3 people will be escorted. Special events or circumstances will be evaluated on a case by case basis and must be requested and discussed with the Project Manager at the Weekly Coordination Meeting. Completion and submission of the form and ***prior approval*** from the Airport Security Coordinator (ASC) or ASC's designee must be received before conducting the escort. To ensure prompt approval requests must be submitted at least three (3) working days in advance to allow for this exemption. In an emergency situation when less than three (3) working days notice is available; submit the fax to Airport Communications at (530) 530-7676. Approval shall be obtained before conducting the escort.

Sterile and Secured Area Access: A Subcontractor or Supplier may be exempted from the airport security badge requirements provided they will be on the work site no more than three (3) consecutive days and are under authorized escort. Exceptions must be submitted by the Project Manager and approved by the Airport Security Coordinator.

Air Operations Area (AOA) Access: A Subcontractor or Supplier may be exempted from the airport security badge requirements provided they will be on the work site no more than fourteen (14) consecutive days and under authorized escort. Exceptions must be submitted by the Project Manager and approved by the Airport Security Coordinator.

Telecommunication / Electrical / Maintenance Room Access: The DOA Information Systems Division shall approve access into DOA telecommunication rooms. The DOA Building Maintenance Division shall approve access into electrical and/or maintenance rooms. A DOA employee shall accompany and escort individuals needing access to these areas. Requests for escorts must be made at least three (3) working days in advance of the event through the Project Manager and/or at the Work Coordination Meetings.

As approved by the Project Manager, Contractor shall contact the DOA Business Development Section at (512) 530-7507 for escort fees, scheduling and additional information. Minimum hourly charge to contractors for required escort services shall be $40.

After-Hours Access: Should the Contractor require access to the Terminal's sterile side after Transportation Security Administration (TSA) operations at security checkpoints have terminated for the day, the Contractor shall contact Airport Communications at (512) 530-2242 (530-ABIA).

1. Prior approval for after hour access must be requested through the Project Manager during the Work Coordination Meetings.

2. The Contractor shall report to the Tool Inspection Checkpoint (Gate E110P) where identification will be verified and registration of his ingress to the Terminal recorded.

3. The Airport Security personnel will inspect and validate the Contractors' provided tool inventory and equipment that are to be brought into the Terminal.

4. Airport Security personnel will provide access into Gate E110P for all badged Contractors and un-badge Contractors with authorized escorts. Contractors will then access the Terminal sterile area via the approved Contractor entrance. The Contractor will never be provided airport badge access through the Tool Inventory Checkpoint.

5. Once admitted into the Terminal service corridor, the Contractor must utilize service elevators and doors as authorized by their airport badge to access their work site.

6. Contractor must exit the Terminal through the Tool Inspection Checkpoint in order for the tool inventory previously completed to be revalidated. Tools shall not be left unattended in the Sterile Area unless properly secured.

Unconventional Access; Unconventional access is defined as entering into the secure side of the Terminal structure or AOA in a fashion other than a card swipe door or gate activity; for example, a baggage conveyor belt. If Contractor requires unconventional access into the Secured Area or Airport Operations Area, the Contractor must make the request at least 24 hours prior to the proposed activity through the Project Manager at the Work Coordination Meetings so that a security validation check can be performed and approval received. The ABIA Airport Security Coordinator will notify the Project Manager, Austin Police Department, Airport Communications, TSA, and OPSEC/Airport Operations of the approved activity and authorized person(s). The Project Manager will notify the contractor.

Curbside Parking; Curbside parking for deliveries adjacent to the ABIA terminal shall be for a maximum of one hour unless approved in writing by the Project Manager. Requests to park curbside shall be submitted to the Project Manager at least three (3) working days prior to the planned delivery and/or the request shall be presented at the Work Coordination meetings. Failure to comply with required notification will subject delivery to be prohibited by the Project Manager.

The following procedures shall be followed for approved parking.

1. The Contractor will contact Airport Communications (512) 530-2242 to advise they are arriving, or have arrived at their approved parking location. An Airport Security Supervisor or designee will be dispatched to meet at the designated parking location.
2. The security representative will inspect the vehicle and apply a distinctive sticker to the vehicle window to indicate that the vehicle has been inspected and authorized to be parked at that location.

   Under no circumstances shall the Contractor's vehicle operator leave the vehicle prior to security inspection.

Key Access; The Airport Security and ID Office controls all locks and keys for access points. Locks and keys may be issued upon written request using ***Core Request*** (Attachment 3) or ***Key Request*** (Attachment 4) forms. The form(s) must be signed by an individual whose signature is on file with the Security and ID Office as authorized to request security items for that organization. Individuals issued a key must have a valid ID badge and be authorized to enter the respective area.

Only "Best Access Systems" keys and cores are approved for installation at ABIA. While the contractor may be permitted to install temporary construction cores in doors, the Security and ID Office shall install all final access door lock cores. If Contractor utilizes DOA provided cores or keys, there will be a replacement cost of $100 per cores and $50 per key for lost items to be deducted from the contract.

Some doors and gates have Intellikey locks installed. If the Contractor requires access to a door(s) or gate(s) with an Intellikey lock, an Intellikey may be issued upon written request using ***Intellikey Acknowledgement – Contractor*** (Attachment 5). The request must be approved and signed by the Project Manager. Failure to return or loss of an Intellikey will result in a $100 replacement cost per key to be deducted from the contract.

1.4 SECURITY IDENTIFICATION BADGE APPLICATION PROCEDURES

Except as noted above, construction workers that are required to work in ABIA Secured Area, Sterile Area or Airport Operations Area shall obtain and prominently display ABIA-issued security ID badges on their person at all times. The DOA Security and ID office is the single point of service for processing security ID badge applications. Contractor should allow 7-10 days for completion of badge processing. Please contact Security and ID at (512) 530-6943 (530-MYID) for all badging inquiries.

The following procedures shall be followed to obtain security ID badges:

1. Project Manager will complete an **Unescorted Access Authorization** form (Attachment 6) for the Contractor Representative(s) who is/are approved for Signatory Authority for the specified project. Project Manager will verify the approved Signatory Authority identification documents are acceptable as listed in the **Personal Information** form (Attachment 8) and advise DOA Security via e-mail of the names. Contractor representative(s) must complete badge application paperwork previously mentioned in this section and successfully complete the Criminal History Records Check (CHRC) and Security Threat Assessment process prior to taking the TSA required Signatory Authority training. Upon successful completion of the training, Contractor representative(s) will complete an **Authorized Signatures** form (Attachment 7). Signatory Authority must verify badge applicants have acceptable identification documents as listed in the **Personal Information** form (Attachment 8) before signing the **Unescorted Authorization** form (Attachment 6).

   Sub-contractors who are active participants in the ABIA Experienced Contractor Program, have signatory authority, and their employees already possess security ID badges but seek to do work for another ABIA project, will not need to rebadge employees under the sponsorship of the added prime project contractor.

2. Badge applicant shall complete, sign the ***Personal Information Form*** (Attachment 8), and present two forms of identification. Acceptable forms of identification are listed on the second page of the form. After completion of badge processing, badge must be obtained within 30 days of fingerprinting.

3. Badge applicant shall read and sign the ***Criminal History Records Check/Disqualifying Criminal Offenses*** (Attachment 9) statement/form.

4. Badge applicant shall submit to an FBI fingerprint-based criminal history records check and a TSA Security Threat Assessment (STA).

5. Non-U.S. citizen contractors shall provide governmental proof of work authorization and an ABIA ***Documentation Verification Form*** (Attachment 10) reviewed and stamped by Immigration and Customs Enforcement personnel located on the ground level of the terminal building.

6. If escort authority is required, Contractor shall read and sign the ***ABIA Escort Procedures Authorization*** (Attachment 1) form.

7. Contractor shall attend the ABIA Security Identification Display Area (SIDA) training if accessing the Secured Area or Airport Operations Area. Training is computer based and is approximately 60 minutes in length with an examination at the conclusion which must be passed. Training is available at the Security and ID office during business hours. A Spanish version of SIDA testing is available; Spanish translators during SIDA testing are prohibited. Any training requiring translation in another language must be preapproved by the Airport Security Manager or designee.

8. All contractors and subcontractors who apply for Unescorted Access have thirty (30) business days from the date of completion of the background check to retrieve their badges. If the contractor and/or subcontractor fails to retrieve their badge within thirty (30) business days, the contractor and/or subcontractor must pay all applicable fees in order to conduct a subsequent background check. Payment must be remitted to the Security and ID office prior to conducting the subsequent background check.

9. Prior to badge issuance, the Contractor with signature authority shall coordinate with the Airport Project Manager or designee to determine badge expiration date (one year or less) and the appropriate access profile.

10. Sub-contractor personnel doing work for two or more prime contractors at ABIA must obtain a security ID badge for each sub-contract. The employee shall wear **only** the appropriate badge for each contractor when working. Steps 1-8 listed above shall be accomplished for each additional badge required for the employee. **Exception: Employees of sub-contractors that are active participants in the ABIA Experienced Contractor Program are not required to possess multiple badges for each sponsoring prime contractor.**

11. Contractor shall promptly respond to any badge audit information requests. Also, access and/or distribution of active contractor badges during project construction and/or warranty period shall be limited and restricted to personnel approved by the Project Manager and DOA Security.

1.5 OTHER POLICIES

Tools, Materials, and Equipment: Contractor shall abide by Airport Security Program, including tool security requirements noted in the ***Acknowledgement of Responsibility, Prohibited Items and Tools in Terminal Concourses and Sterile Areas*** (Attachment 13) form. All tools to be used in the Sterile Area must be processed through the loading dock. Contractor shall keep tools and other items not in use in a lockable toolbox (gang box) or in a secured area not accessible to the public. Tools shall not be left unattended in the Sterile Area. An inventory of all tools using ***ABIA Tool Inventory List*** (Attachment 14) form will be conducted before entering the restricted area and upon exiting.

Contractor must utilize ***ABIA Daily Tool Inventory List*** (Attachment 15) for any tools that are to be left in the terminal complex overnight. This inventory must remain at the job site, up to date, and readily available for inspection by ABIA/TSA security personnel.

At any time a tool is discovered missing, Airport Communications must be contacted immediately at (512) 530-2242. Airport OPSEC and the Contractor must conduct a search of the last known location and nearby area. The Contractor must complete an incident report regarding the missing tool(s).

Introduction of tools, materials, and equipment into the Secured / Sterile Areas, AOA, and SIDA must be coordinated through the Project Manager.

Vehicle Registration and Driver's Training: If the work requires un-escorted vehicular access in the Secured Area or Airport Operations Area (AOA), Contractor shall complete and submit ***ABIA Vehicle Registration LOGO Form*** (Attachment 16) for each vehicle, present proof of required insurance, and submit a picture of the company vehicle logo in a .jpeg format to the Project Manager. Proposed vehicle drivers must attend airport driver's training. Training is computer based and may be taken in conjunction with the SIDA training previously mentioned. Airport Driver's training is approximately one hour in length with an examination at the conclusion which must be passed. Training is available at the Security and ID office during business hours. Contact Airport Operations (512) 530-7550 for more information regarding driver's training.

Security at Construction Site: Contractors, or any other non-Airport personnel, having authorized Secured Area/AOA access and having been assigned a Secured Area/AOA access point for their temporary use shall maintain positive control of the access point by the use of off-duty ABIA Security personnel or employees of a private security firm approved by the Director, designee, or Transportation Security Administration (TSA). As approved by the Project Manager, Contractor shall contact the DOA Business Development Section (512) 530-7507 for escort fees, scheduling and additional information. Minimum hourly charge to contractors for required access control services shall be $40 per hour.

Contractor will conduct a security briefing with personnel assigned to the access point each day with signatures by the Contractor and security personnel signifying a clear understanding of security procedures required. Contents of the briefing will be determined during the construction project meeting and copies of the previous week's daily briefing will be provided to the Project Manager.

Required Reporting of Work Site Incidents: Contractors shall immediately call Airport Communications at (512) 530-2242 whenever there is a work site incident that includes, but is not limited to, the following:

- Causes any personnel to be hurt
- Puts the public or airport occupants at risk
- Increases fire risk or creates hazardous conditions
- Causes any damage to airport property
- Causes spillage of contaminants
- Causes reductions in facility indoor air quality
- Disrupts airport operation or utilities
- Any other incident or condition that the Airport needs to be aware of for operations, security, and/or safety reasons

Temporary Wall/Door/Lock/Fence/Gate: If temporary modification to current access control methods are required to the Sterile Area, Secured Area and/or Air Operations Area, the Contractor shall comply with the following procedures as stated in Title 49 CFR Part 1542.105: *"The request for an amendment must be filed with the designated official at least 45 days before the date it proposes for the amendment to become effective, unless a shorter period is allowed by the designated official. Within 30 days after receiving a proposed amendment, the designated official, in writing, either approves or denies the request to amend."* For purposes of this section, the request shall be made to the Project Manager who will forward it to the Security and ID office. An example may be the installation of a temporary gate somewhere along the AOA fence line.

Security ID Badge Control: Contractor must conduct a monthly badge audit with Owner to ensure all active badge holders are still employed. Security and ID Office will provide an Active Badge List upon request. Any requests for badge audit information must be submitted to the Airport Security Coordinator when requested.

Contractor must return badges of Subcontractors to the DOA Security and ID office within three (3) working days of the subcontractors work completion. Contractor shall immediately notify Airport Communications (512) 530-2242 when aware an individual's access authority has been revoked or limited for adverse reasons or termination of employment.

Loss of security items: Loss of any security-related item is a serious incident. All losses will be reported immediately to Airport Communications (512) 530-2242. The Airport Security Coordinator or representative must approve replacement of any lost security item. Loss or failure to return a security access badge will result in a fee of $500.00 per badge to be deducted from the contract. Contractor is responsible for replacement costs and any other fees associated with lost security items.

Federal Aviation Administration (FAA)/ Transportation Security Administration (TSA) Imposed Penalties

FAA or the Department of Homeland Security may impose civil penalties to individuals, companies, and the airport for safety or security violations. Maximum penalties assessed against an individual can be $50,000 and companies $400,000. Pursuant with City contract provisions and City of Austin ordinances, Contractor shall be responsible for payment of any civil penalties assessed against the Contractor or Owner due to safety/security program violations committed by the Contractor.

PART 2 – PRODUCTS (Not Used)

PART 3 – EXECUTION (Not Used)

END OF SECTION 01555

ATTACHMENTS:

#1 ABIA Escort Procedures and Authorization
#2 Special Escort Notification form
#3 Core Request form
#4 Key Request form
#5 Intellikey Acknowledgement Form - Contractor
#6 Unescorted Access Authorization form
#7 Authorized Signatures
#8 Personal Information form
#9 Criminal History Records Check/Disqualifying Criminal Offenses statement/form
#10 Document Verification form
#11 Privacy Act Notice
#12 Terms and Conditions
#13 Acknowledgement of Responsibility, Prohibited Items and Tools in Terminal Concourses and Sterile Areas form
14 ABIA Tool Inventory List
15 ABIA Daily Tool Inventory List
16 ABIA Vehicle Registration LOGO form

Austin-Bergstrom International Airport

ABIA ESCORT PROCEDURES AUTHORIZATION FORM

Escort Procedures

SD 1542-06-01D Compliance and Procedures for authorized escorts; please read carefully as you will be ultimately responsible for the following procedures conducted as per TSA (Transportation Security Administration) CFR 1542. Failure to comply could result in Criminal and/or Civil penalties for non-compliance, as well as denial or revocations of access media (badge).

Escort

To accompany or monitor the activities of an individual who does not have unescorted access authority into or within a Sterile, Secured Area or SIDA, and/or Air Operations Area (AOA).

While in the SIDA, each person, unless under escort, is required to continuously display an AUS approved identification media. Identification must be displayed above the waist on the outermost garment at all times. All employees are required to challenge individuals who are not in compliance with the display requirements.

A. Escort Procedures:

1. Each person acting as an escort must inform all individual(s) being escorted that they are in a security area of the airport and all security rules and regulations must be followed. The escort is required to be able to, at all times until the escorted individual has left the security area, physically control the escorted individual(s)' movement when escorted in the Secured Area and visually control the escorted individual(s) movement when escorted in the AOA and Sterile Area. Only individuals with current unescorted access authority are permitted to escort. Those who have authority to escort will have the designated silver background with (AUS) Sticker which gives them the authority to escort. Unless otherwise exempt the maximum number of individuals who can be escorted is three (3).

2. Any escorted persons engaged in activities other than those for which the escorted access was granted shall be challenged to the validity of the action. When necessary, the person shall be removed from the escorted area. When deemed necessary to have assistance to remove escorted persons from the area, ***Law Enforcement Personnel (LEP) will be contacted through Airport Communications at (512) 530-ABIA (2242).***

3. Individuals escorted into a sterile area, who have not been cleared at the screening checkpoint, must remain under escort until they exit the area. The escort will remain within a distance of individual(s) under escort so that positive control over the individual(s) actions is maintained.

4. No individual who has been issued an active AUS identification media/ID may be escorted; i.e., left badge at home, or is not in possession of media/id. An individual whose badge is suspended or expired may not be escorted.

5. Unless otherwise exempt from this process, ***before conducting an escort you must contact (by fax [(512)530-7676] or telephone) Airport Communications (512) 530-2242*** who will verify your authority to escort. Airport Communications will record the date and time of contact. Failure to do so could result in the revocation of escorting privileges. You will provide Airport Communications with the following information:

    a. The names and date of birth of all individuals being escorted (3 maximum).
    b. Estimated length of time the escort will be conducted.
    c. Approximate location of the escort.
    d. Reason for the escort.

You may also check-in with the Security Officer located at the following locations in lieu of contacting Communications when these posts are manned by Security Officers. These locations are the loading dock, E110 and Check Point Charlie W-123). If the loading dock or E110 are closed you will need to contact Communications.

Exemptions:

A ***"Special Event Notification Form"*** may be utilized in instances where more than 3 people will be escorted. Special events or circumstances will be evaluated on a case by case basis. Completion and submission of the form and ***prior approval*** from the ASC or ASC's designee must be received before conducting the escort. To ensure prompt approval completed forms should be faxed to (512) 530-7530 at least 72 hours in advance to allow for this exemption. In an emergency situation when less than 72 hours notice is available; submit the fax to Airport Communications at (512) 530-7676. Approval ***must*** be obtained before conducting the escort.

Cargo and Belly Freight Operators, while providing escorts in their facilities and their adjoining fenced in areas at Gates W125 /W130 (Belly Freight), are ***only exempt*** from the notification process. Proper escorts must be conducted at all times while in the SIDA. Belly freight and fuel farm operators may make notification of an escort through the Security Officer Booth located near W123.

Fuel Farm Operators, while providing escorts in their facilities and their adjoining fenced in areas, are ***only exempt*** from the notification process. Proper escorts must be conducted at all times while in the SIDA. Fuel Farm Operators may make notification through the Security Officer Booth located near W123.

EMS, ARFF, AFD, Security Officers, Airside Operations, OPSEC, TSA and Law Enforcement Personnel are exempt from notification process and 3 person limitations.

ID Display:

All persons within, or attempting to gain access to the SIDA of the Airport, who are not under escort, shall display on their person, at all times while in the SIDA, an identification badge issued or approved by the Airport. The identification badge must be displayed with the photo visible to the front, readily visible between the neck and waist on the outermost garment.

Challenge

The act of attempting to ascertain the authority or purpose of an unescorted person, not wearing or properly displaying airport issued/approved identification, to access or remain in the SIDA of the airport, by directly requesting such person to display airport issued/approved identification.

Secured Area

A portion of an airport, specified in the ***Airport Security Program***, in which certain security measures specified in Part 1542 of 49 CFR Chapter XII are carried out. This area is where aircraft operators and foreign air carriers that have a security program under Part 1544 or 1546 of 49 CFR Chapter XII enplane and deplane passengers and sort and load baggage and any adjacent areas that are not separated by adequate security measures.

Security Identification Display Area (SIDA)

A portion of an airport, specified in the ***Airport Security Program***, in which security measures specified in Part 1542 are carried out. This area includes the Secured Area and may include other areas of the airport.

Sterile Area

A portion of an airport defined in the ***Airport Security Program*** that provides passengers access to boarding aircraft and to which the access generally is controlled by TSA, or by an aircraft operator under Part 1544 of 49 CFR Chapter XII or a foreign air carrier under Part 1546 of 49 CFR Chapter XII, through the screening of persons and property.

I have read and understand the Approved Escort Procedures for AUS:

Company :_____

Employee Information
Printed Name :_____
Badge Number: :_____
Signature: :_____
Date: :_____

Signatory Authority Information
Printed Name :_____
Badge Number :_____
Signature :_____

As Signatory Authority you are verifying the above person who is being granted SIDA or sterile area escort authority has a legitimate business need for such authority to conduct their duties at Austin-Bergstrom International Airport.

The Airport Operator via the Airport Security Coordinator or designee has the ultimate right to refuse escort authority to anyone who is found to abuse such authority or is found not in compliance.

Special Event Notification Form

A ***"Special Event Notification Form"*** may be utilized in instances where more than 3 people will be escorted. Special events or circumstances will be evaluated on a case by case basis. Completion and submission of the form and ***prior approval*** from the ASC or ASC's designee must be received before conducting the escort. To ensure prompt approval completed forms should be faxed to (512) 530-7530 at least 72 hours in advance to allow for this exemption. In an emergency situation with less than 72 hours notice is available; submit the fax to Airport Communications at (512) 530-7676. Approval ***must*** be obtained before conducting the escort.

- Names and date of birth of all individuals being escorted.
- Estimated length of time the escort will be conducted.
- Approximate location of the escort.
- Reason for the escort.

Authorized Escort Name, Badge Number and Employer:

Name: _____
Badge Number: _____
Employer: _____

Full name of person being escorted	**Date of Birth**

Austin-Bergstrom International Airport
Cores

TO: Security and ID Office Aviation Department	FROM: (Sponsor)

A. Request the following person to be issued an airport security key indicated.

1. Name: (Last) _____ (First)_____ (Middle)_____
   Badge #_____ Expires:_____

2. Key (check as appropriate)
   [ ] Building Doors _____
   [ ] Perimeter Fence Gates_____
   [ ] Other_____

3. Method of Payment:
   [ ] User Fee [ ] Cash/ Check [ ] Charge [ ] N/A

I am authorized to request issue of security items (signature on file with the Security and ID office.

Signature:_____ Badge #:_____ Date:_____

B. Verification: [ ] Requestor's Signature [ ] Recipient's Badge Number

Signature:_____ Badge #:_____ Date:_____

C. Received items listed in A-2 as follows:
Core ID:_____ Amount:_____
_____ _____
_____ _____
_____ _____
_____ _____

Signature:_____ Badge # _____ Date:_____

D. Core Revocation:
Core(s) [ ] Lost [ ] Returned
Penalty deducted from contract for lost or damaged core $_____

Signature:_____ Badge #:_____ Date:_____

Austin-Bergstrom International Airport
Key Issue

TO: Security and ID Office Aviation Department	FROM: (Sponsor)

A. Request the following person to be issued an airport security key indicated.

1. Name: (Last) _____ (First)_____ (Middle)_____
   Badge #_____ Expires:_____

2. Key (check as appropriate)
   [ ] Building Doors _____
   [ ] Perimeter Fence Gates_____
   [ ] Other_____

3. Method of Payment:
   [ ] User Fee [ ] Cash/ Check [ ] Charge [ ] N/A

I am authorized to request issue of AOA/SIDA items (signature on file with the Security and ID office) and I certify that necessary procedures have been established to control the items.

Signature:_____ Badge #:_____ Date:_____

B. Verification: [ ] Requestor's Signature [ ] Recipient's Badge Number

Signature:_____ Badge #:_____ Date:_____

C. Received items listed in A-3 as follows:

Key ID:	Amount:	Serial Number:
_____	_____	_____
_____	_____	_____
_____	_____	_____
_____	_____	_____

Signature:_____ Badge # _____ Date:_____

D. Key Revocation:
Key(s) [ ] Lost [ ] Returned [ ] Destroyed

Signature:_____ Badge #:_____ Date:_____

E. Penalty Deducted from Contract:
Received Total of $ _____

Signature: _____ Badge #:_____ Date:_____

Intellikey Acceptance Acknowledgement

I, _____, ABIA SIDA badge #_____ acknowledge receipt of an INTELLIKEY. I understand the security system of ABIA will be compromised if the key is lost and agree to the following terms as conditions for acceptance:

- Control of the Intellikey must be maintained at all times.
- Intellikey will be kept in a secure location while not on ABIA property.
- Intellikey will be used for the performance of contracted job responsibilities and will not be used for any other purpose.
- The Security and ID Office (Airport Communications, after hours) must be notified immediately if an Intellikey is lost or stolen. Failure to immediately make the proper notifications of a lost Intellikey can result in a suspension of Airport ID/Access privileges.
- If an Intellikey is lost, the replacement cost will be $100.00. Any subsequent losses will result in an additional deposit and possible non-issuance of an Intellikey.
- Intellikey must be "refreshed" within the established ABIA timeline to remain valid.

I have read the above requirements and understand the contents.

_____ _____

Signature Date

The above individual is approved for issuance of an Intellikey.

_____

Project Manager- P & E
Austin Bergstrom International Airport

Austin-Bergstrom International Airport

UNESCORTED ACCESS AUTHORIZATION FORM

Print legibly or type. Incomplete or illegible forms will not be processed
MUST BE COMPLETED IN BLUE INK.

Employee's **Last** Name ↑	**First** Name ↑	**Full Middle** Name↑

I request the following items/services for the above listed employee:

□ New Employee Badge
□ Renewal of Employee Badge
□ Replacement of Lost/Stolen Badge
□ Replacement of Expired Badge
□ Fingerprints
□ Security Threat Assessment

The items/services will be paid for in the manner indicated below (check one):

□ Employee will pay (American Express,VISA or MasterCard)
□ Company will pay (American Express,VISA or MasterCard)
□ Bill this company (limited to select tenants)
□ No Charge (Government Employees)

This employee will need the following type of badge (check all that apply):

□ **(Green)** Sterile Area + AOA + Secured Area (Ramp)
□ **(Orange)** Sterile and Restricted Area within Terminal
□ **(Yellow)** Cargo Ramp and Maintenance Ramp only
□ **(Blue)** T-Hangers Access Only
□ **(White)** ID only – No Access

Other employee requirements:

PLEASE INITIAL: Ramp Driving _____ Escort _____ Runway/Taxiway _____ LEP _____

By signing below I indicate that my signature is on file with the Security and ID Office and I am authorized to request security items as required by Transportation Security Administration Regulation 49 CFR 1542.209 or 49 CFR 1544.229.

I certify that I have inspected the identification documents of the person named above and they are acceptable forms of identification as listed on the second page of the Security and ID Personnel Information Form. I understand my Signatory Authority may be revoked for failure to inspect and verify the required identification documents.

ID's Checked: #1 _____Exp Date: _____ #2: _____Exp Date: _____

PRINT AUTHORIZER'S NAME	**AUTHORIZER'S SIGNATURE**
COMPANY NAME	**AUTHORIZER'S PHONE**
SPONSOR COMPANY	**DATE (IN MM/DD/YYYY FORMAT)**

LIST OF ACCEPTABLE DOCUMENTS

ONE OF WHICH MUST BE A PHOTO ID

ONE FORM OF ID FROM LIST A & B, OR ONE FROM LIST A & C, OR ONE FROM LIST B & C

All documents must be UNEXPIRED

LIST A	LIST B	LIST C
1. U.S. Passport or U.S. Passport Card 2. Permanent Resident Card or Alien Registration Receipt Card (Form I-551) 3. Foreign passport that contains a temporary I-551 stamp or temporary I-551 printed notation on a machine-readable immigrant visa 4. Employment Authorization Document that contains a photograph (Form I-766) 5. For a nonimmigrant alien authorized to work for a specific employer because of his or her status: a. Foreign passport; and b. Form I-94 or Form I 94-A that has the following: 1) The same name as the passport; and 2) An endorsement of the alien's nonimmigrant status as long as that period of endorsement has not yet expired and the proposed employment is not in conflict with any restrictions or limitations identified on the form. 6. Passport from the Federated States of Micronesia (FSM) or the Republic of the Marshall Islands (RMI) with Form I-94 or Form I-94A indicating nonimmigrant admission under the Compact of Free Association Between the United States and the FSM or RMI.	1. Driver's license or ID card issued by a state or outlying possession of the United States provided it contains a photograph or information such as name, date of birth, gender, height, eye color, and address 2. ID card issued by federal, state, or local government agencies or entities, provided it contains a photograph or information such as name, date of birth, gender, height, eye color, and address 3. School ID card with a photograph 4. Voter's registration card 5. U.S. Military card or draft record 6. Military dependent's ID card 7. U.S. Coast Guard Merchant Mariner Card 8. Native American tribal document 9. Driver's license issued by a Canadian government authority **For persons under age 18 who are unable to present a document listed above:** 10. School record or report card 11. Clinic, doctor, or hospital record 12. Day-care or nursery school record	1. A Social Security Account Number card unless the card includes one of the following restrictions 1) NOT VALID FOR EMPLOYMENT 2) VALID FOR WORK ONLY WITH INS AUTHORIZATION 3) VALID FOR WORK ONLY WITH DHS AUTHORIZTION 2. Certification of Birth Abroad issued by the Department of State (Form FS-545) 3. Certification of Report of Birth issued by the Department of State (Form DS-1350) 4. Original or certified copy of birth certificate issued by a State, county, municipal authority, or territory of the United States bearing an official seal 5. Native American tribal document 6. U.S. Citizen ID Card (Form I-197) 7. Identification Card for Use of Resident Citizen in the United States (Form I-179) 8. Employment authorization document issued by the Department of Homeland Security

ADDITIONAL DOCUMENT REQUIREMENTS

A. Individuals who are not U.S. citizens must provide:

1. Alien Registration Number; **or**
2. I-94 Arrival/Departure Number

B. Individuals who hold a non-immigrant Visa must provide it.

C. Individuals who are U.S. citizens born abroad or naturalized U.S. citizens must provide:

1. U.S. passport (List A); **or**
2. Certificate of Naturalization ; **or**
3. Certification of Birth Abroad, Form DS-1350 (List C)

Austin-Bergstrom International Airport

AUTHORIZED SIGNATURES

Blue ink only

Austin-Bergstrom International Airport	**Dept/Company Name ➔**	

DEPARTMENT HEAD YES_____ NO_____

As the owner, manager, chief executive officer, or person otherwise in charge and in accordance with the Austin Bergstrom International Airport Security Program, I authorize the following persons besides myself, employees of my company/organization, to sign requests for AOA, SIDA and other restricted area access authorizations and related security items. This form invalidates and replaces all previous authorization forms for my company/organization. All contact phone numbers are correct as of the date of this form. I am the only individual with my company/organization that is authorized to add or remove names on this authorization form.

SIGNATORY AUTHORITY

PRINT NAME **BADGE NUMBER**

BUSINESS TELEPHONE **ALTERNATE TELEPHONE** **E-MAIL ADDRESS**

I CERTIFY THAT I HAVE RECEIVED TRAINING IN AND UNDERSTAND THE DUTIES AND RESPONSIBILTIES OF AN AUTHORIZED SIGNER

SIGNATURE **DATE**

COPY

SECURITY AND ID PERSONAL INFORMATION FORM

**********Please Print Clearly********** Badge # _____

EMPLOYER INFORMATION

_____/_____
Sponsor Company Contract Company

PERSONAL INFORMATION

_____/_____/_____
Last Name First Name (Full) Middle Name (Full)

Alias/Maiden/Other names used_____/_____/_____
Last Name First Name Middle Name

_____/_____/_____/_____
Home Address City State Zip

GENDER: (circle one) Male Female ETHNICITY: White Black Hispanic Asian Other: _____

EYE COLOR: Black Blue Brown Gray Green Hazel Other: _____

HAIR COLOR: Black Blonde Brown Gray Red White Bald Other: _____

DATE OF BIRTH: _____ HEIGHT: _____ WEIGHT: _____

STATE OF BIRTH (or Foreign Country): _____ COUNTRY OF CITIZENSHIP: _____

SOCIAL SECURITY # _____DRIVERS LICENSE or ID # _____STATE_____

PASSPORT # _____ PASSPORT COUNTRY: _____

ALIEN REGISTRATION # (if applicable) _____

NON IMMIGRANT VISA # (if applicable) _____

WORK PHONE # _____ HOME PHONE # _____ ALT PHONE # _____

E-MAIL ADDRESS _____

The information I have provided is true and correct to the best of my knowledge and belief and is provided in good faith. I understand that a knowing and willful false statement can be punishable by fine or imprisonment or both. (See Section 1001 of Title 18 of the United States Code)

Signature: _____ Date:_____

I authorize the Social Security Administration to release my Social Security Number and full name to the Transportation Security Administration, Office of Transportation Threat Assessment and Credentialing (TTAC), Attention: Aviation Programs (TSA-19)/Aviation Worker Program, 601 South 12th Street, Arlington, Va. 20598.

I am the individual to whom the information applies and want this information released to verify that my SSN is correct. I know if I make any representation that I know is false to obtain information from Social Security records, I could be punished by a fine or imprisonment or both.

Signature: _____ DOB: _____

SSN and Printed Full Name: _____

SECURITY AND ID PERSONAL INFORMATION FORM

Badge Applicant's Name Last _____ First_____ Middle_____

LIST OF ACCEPTABLE DOCUMENTS ---ONE OF WHICH MUST BE A PHOTO ID
ONE FORM OF ID FROM LIST A & B, OR ONE FROM LIST A & C, OR ONE FROM LIST B & C
All documents must be UNEXPIRED

LIST A	LIST B	LIST C
1. U.S. Passport or U.S. Passport Card 2. Permanent Resident Card or Alien Registration Receipt Card (Form I-551) 3. Foreign passport that contains a temporary I-551 stamp or temporary I-551 printed notation on a machine-readable immigrant visa 4. Employment Authorization Document that contains a photograph (Form I-766) 5. For a nonimmigrant alien authorized to work for a specific employer because of his or her status: a. Foreign passport; and b. Form I-94 or Form I 94-A that has the following: 1) The same name as the passport; and 2) An endorsement of the alien's nonimmigrant status as long as that period of endorsement has not yet expired and the proposed employment is not in conflict with any restrictions or limitations identified on the form. 6. Passport from the Federated States of Micronesia (FSM) or the Republic of the Marshall Islands (RMI) with Form I-94 or Form I-94A indicating nonimmigrant admission under the Compact of Free Association Between the United States and the FSM or RMI.	1. Driver's license or ID card issued by a state or outlying possession of the United States provided it contains a photograph or information such as name, date of birth, gender, height, eye color, and address 2. ID card issued by federal, state, or local government agencies or entities, provided it contains a photograph or information such as name, date of birth, gender, height, eye color, and address 3. School ID card with a photograph 4. Voter's registration card 5. U.S. Military card or draft record 6. Military dependent's ID card 7. U.S. Coast Guard Merchant Mariner Card 8. Native American tribal document 9. Driver's license issued by a Canadian government authority **For persons under age 18 who are unable to present a document listed above:** 10. School record or report card 11. Clinic, doctor, or hospital record 12. Day-care or nursery school record	1. A Social Security Account Number card unless the card includes one of the following restrictions 1) NOT VALID FOR EMPLOYMENT 2) VALID FOR WORK ONLY WITH INS AUTHORIZATION 3) VALID FOR WORK ONLY WITH DHS AUTHORIZTION 2. Certification of Birth Abroad issued by the Department of State (Form FS-545) 3. Certification of Report of Birth issued by the Department of State (Form DS-1350) 4. Original or certified copy of birth certificate issued by a State, county, municipal authority, or territory of the United States bearing an official seal 5. Native American tribal document 6. U.S. Citizen ID Card (Form I-197) 7. Identification Card for Use of Resident Citizen in the United States (Form I-179) 8. Employment authorization document issued by the Department of Homeland Security

ADDITIONAL DOCUMENT REQUIREMENTS

A. Individuals who are not U.S. citizens must provide:
1. Alien Registration Number; **or**
2. I-94 Arrival/Departure Number

B. Individuals who hold a non-immigrant Visa must provide it.

C. Individuals who are U.S. citizens born abroad or naturalized U.S. citizens must provide:

1. U.S. passport (List A); **or**
2. Certificate of Naturalization ; **or**
3. Certification of Birth Abroad, Form DS-1350 (List C)

*****SECTION BELOW TO BE COMPLETED BY SECURITY AND ID OFFICE PERSONNEL USE ONLY*****

_____/_____
Documents verified by (Signature of Trusted Agent) Date

_____/_____
Badge issued by (Signature of Trusted Agent) Date

Austin-Bergstrom International Airport

Criminal History Records Check Disqualifying Criminal Offenses

An individual has a disqualifying offense if the individual has been convicted of, or found not guilty of by reason of insanity, any of the disqualifying crimes listed in this paragraph in any jurisdiction a minimum of 10 years before the date of the individual's application for unescorted access authority, or while the individual has unescorted access authority. The disqualifying criminal offenses are as follows:

		Yes	No
1	Forgery of certificates, false marking of aircraft, and other aircraft registration violations in violation of 49 U.S.C. 46306.	☐	☐
2	Interference with air navigation in violation of 49 U.S.C. 46308.	☐	☐
3	Improper transportation of hazardous material in violation of 49 U.S.C. 46312.	☐	☐
4	Aircraft piracy in violation of 49 U.S.C. 46502.	☐	☐
5	Interference with flight crew member or flight attendants in violation of 49 U.S.C. 46504	☐	☐
6	Commission of certain crimes aboard aircraft in flight in violation of 49 U.S.C. 46506.	☐	☐
7	Carrying a weapon or explosive aboard aircraft in violation of 49 U.S.C. 46505.	☐	☐
8	Conveying false information and threats in violation of 49 U.S.C. 46507.	☐	☐
9	Aircraft piracy outside the special aircraft jurisdiction of the United States in violation of 49 U.S.C. 46502(b).	☐	☐
10	Lighting violations involving transporting controlled substances in violation of 49 U.S.C. 46315.	☐	☐
11	Unlawful entry into an aircraft or airport area that serves air carriers or foreign air carriers contrary to established security requirements in violation of 49 U.S.C. 46314.	☐	☐
12	Destruction of an aircraft facility in violation of 18 U.S.C. 32.	☐	☐
13	Murder.	☐	☐
14	Assault with intent to murder.	☐	☐
15	Espionage.	☐	☐
16	Sedition.	☐	☐
17	Kidnapping or hostage taking.	☐	☐
18	Treason.	☐	☐

		Yes	No
19	Rape or aggravated sexual abuse.	☐	☐
20	Unlawful possession, use, sale, distribution, manufacture of an explosive or weapon.	☐	☐
21	Extortion.	☐	☐
22	Armed or felony unarmed robbery.	☐	☐
23	Distribution of, or intent to distribute, a controlled substance.	☐	☐
24	Felony arson.	☐	☐
25	Felony involving a threat.	☐	☐
26	Felony involving willful destruction of property.	☐	☐
27	Felony involving importation or manufacture of a controlled substance.	☐	☐
28	Felony involving burglary.	☐	☐
29	Felony involving theft.	☐	☐
30	Felony involving dishonesty, fraud, or misrepresentation.	☐	☐
31	Felony involving possession or distribution of stolen property.	☐	☐
32	Felony involving aggravated assault.	☐	☐
33	Felony involving bribery.	☐	☐
34	Felony involving illegal possession of a controlled substance punishable by a maximum term of imprisonment of more than 1 year.	☐	☐
35	Felony involving violence at international airports in violation of 18 U.S.C. 37.	☐	☐
36	Conspiracy or attempt to commit any of the criminal acts listed on this page.	☐	☐

By signing below I certify that I do not have any of the above listed disqualifying criminal offenses.

Also signing below indicates my understanding that I have a continuing obligation under Title 49, CFR, Parts 1542.209 and 1544.229 to disclose to the airport operator within 24 hours if I plead guilty or nolo contendere ("no contest") to, have an adjudication withheld, have been convicted or found not guilty by reason of insanity to any of the disqualifying crimes listed on this application or the federal security regulations.

Also signing below indicates the information I have provided on this application is true, complete, and correct to the best of my knowledge and belief and is provided in good faith. I understand that a knowing and willful false statement on this application can be punished by fine or imprisonment or both. (See section 1001 of Title 18 United States Code.)

PRINT NAME	SIGNATURE	DATE

CHRC-DCO FORM (JEB SID 10 2/05)

Austin-Bergstrom International Airport

ABIA INS DOCUMENTATION VERIFICATION FORM

Verification of U.S. Department of Justice – Immigration and Naturalization Service Issued Resident Alien – Permanent Resident – Work Authorization – Photo Identification

Last Name ↑	First Name ↑	Middle Name ↑
Citizenship ↑	Date of Birth ↑	
Social Security Number ↑		

SECTION BELOW TO BE COMPLETED BY US CUSTOMS & BORDER PROTECTION PERSONNEL

Verified By ↑	Agency Name ↑	Date ↑

Privacy Act Statement

Authority: 6 U.S.C. § 1140, 46 U.S.C. § 70105; 49 U.S.C. §§ 106, 114, 5103a, 40103(b)(3), 40113, 44903, 44935-44936, 44939, and 46105; the Implementing Recommendations of the 9/11 Commission Act of 2007, § 1520 (121 Stat. 444, Public Law 110-52, August 3, 2007); and Executive Order 9397, as amended.

Purpose: The Department of Homeland Security (DHS) will use the biographic information to conduct a security threat assessment. Your fingerprints and associated information will be provided to the Federal Bureau of Investigation (FBI) for the purpose of comparing your fingerprints to other fingerprints in the FBI's Next Generation Identification (NGI) system or its successor systems including civil, criminal, and latent fingerprint repositories. The FBI may retain your fingerprints and associated information in NGI after the completion of this application and, while retained, your fingerprints may continue to be compared against other fingerprints submitted to or retained by NGI. DHS will also transmit your fingerprints for enrollment into US-VISIT Automated Biometrics Identification System (IDENT). If you provide your Social Security Number (SSN), DHS may provide your name and SSN to the Social Security Administration (SSA) to compare that information against SSA records to ensure the validity of the information.

Routine Uses: In addition to those disclosures generally permitted under 5 U.S.C. 522a(b) of the Privacy Act, all or a portion of the records or information contained in this system may be disclosed outside DHS as a routine use pursuant to 5 U.S.C. 522a(b)(3) including with third parties during the course of a security threat assessment, employment investigation, or adjudication of a waiver or appeal request to the extent necessary to obtain information pertinent to the assessment, investigation, or adjudication of your application or in accordance with the routine uses identified in the TSA system of records notice (SORN) DHS/TSA 002, Transportation Security Threat Assessment System. For as long as your fingerprints and associated information are retained in NGI, your information may be disclosed pursuant to your consent or without your consent as permitted by the Privacy Act of 1974 and all applicable Routine Uses as may be published at any time in the Federal Register, including the Routine Uses for the NGI system and the FBI's Blanket Routine Uses.

Disclosure: Furnishing this information (including your SSN) is voluntary; however, if you do not provide your SSN or any other information requested, DHS may be unable to complete your application for identification media.

I have read and understand the Privacy Act Notice above.

_____ _____

SIGNATURE **Date**

AUSTIN BERGSTROM INTERNATIONAL AIRPORT UNESCORTED ACCESS TERMS AND CONDITIONS

CHECK ALL BOXES AS YOU READ THEM

☐ **This Airport Access Identification Badge is issued for my Individual Use Only and I will not under any conditions allow another individual to use it.** ***(City Ordinance 13-1-81)***

☐ **This Airport Access Identification Badge remains the property of Austin Bergstrom International Airport (ABIA) and Must Be Returned to the Airport Security Coordinator or their designee upon demand, resignation, termination or at any time it is no longer required.** ***(City Ordinance 13-1-81)***

☐ **If this Airport Access Identification Badge is lost or stolen, I will immediately notify Airport Communications at (512) 530-2242.** ***(City Ordinance 13-1-81)***

☐ **I understand that any violation of the ABIA operations or security rules and regulations, Transportation Security Administration (TSA) Security Regulations, Federal, State, and Local Laws, may result in the suspension, revocation, and/or denial of this Unescorted Access Identification Badge.**

☐ **I understand and agree to properly display this Airport Access Identification Badge while in a secured or restricted area.** ***(City Ordinance 13-1-82)***

☐ **I agree to challenge all suspicious persons or any person not displaying proper identification while in the secured and restricted areas of the airport and agree to submit for inspection my Airport Access Identification Badge to any properly badged individual upon request.**

☐ **I will remain at all Airport Operations Area (AOA) gates until they are fully closed.** ***(City Ordinance 13-1-84)***

☐ **I agree that I will not "piggyback" through any designated door or gate and will not allow anyone else to "piggyback" behind me.** ***(City Ordinance13-1-81)***

☐ **I understand that replacement of any lost or stolen badge will result in a non-refundable payment of $25.00 before an additional badge will be issued; the second lost badge will result in a non-refundable payment of $50.00 and the third lost badge results in a non-refundable payment of $75.00. There is also a $15 non-refundable badge fee for all non-government employees and a $25 deposit (refundable if badge is found and turned into the badging office). A fourth lost badge could result in my inability to be issued an Airport Access Identification Badge.**

☐ **I agree to report any suspicious activity observed on ABIA property to Airport Security or local law enforcement.**

☐ **I agree to comply with all ABIA Escort Procedures.** ***(City Ordinance 13-1-82)***

☐ **I agree to secure my Airport Access Identification Badge in a safe location when I am not on duty in order to prevent theft. (Do not leave in vehicle; do not hang on rear view mirror)**

☐ **I agree to and understand that failure to return this Airport Access Identification Badge upon expiration, resignation, termination, or at anytime that the Identification is no longer needed may result in my arrest and/or criminal and civil fines.** ***(City Ordinance 13-1-81)(CFR 49 Part 1542.211)***

☐ **I agree that if I travel as a passenger I must access the sterile area through a TSA screening checkpoint with any property that I intend to carry onboard the aircraft and remain in the sterile area after entering.**

☐ **I have successfully completed and understand all training required to receive this Airport Access Identification Badge. I also agree to and understand all of the above terms and conditions associated with its issuance.**

I HAVE READ THE ABOVE AND UNDERSTAND THE CONTENTS.

NAME (PRINTED) _____ WITNESS NAME_____

SIGNATURE _____ SIGNATURE _____

DATE _____ DATE _____

AUSTIN BERGSTROM INTERNATIONAL AIRPORT

Acknowledgement of Responsibility
Prohibited items and Tools in Terminal Concourses and Sterile Areas

Due to heightened security, the Transportation Security Administration (TSA) has required that no items identified in the TSA "Prohibited items List" be allowed in the terminal concourses and sterile areas of the airport. This prohibition includes all pocketknives, carpet knives, and other folding or retractable blades, regardless of blade length or composition. The prohibition also includes sabers, swords, hunting knives, martial arts devices, ice picks, straight razors, and elongated scissors, or any tool with a sharp blade that could be utilized as a weapon or cutting tool. This list is not comprehensive, and common sense should always prevail. A current copy of the TSA "Prohibited items" may be obtained at www.TSA.gov or by calling the Security Badging office at (512) 530-6943.

The TSA acknowledges the need to allow for maintenance in the concourse areas, and therefore some exceptions have been made. Personnel requiring the use of tools and other prohibited items to perform essential job functions may do so if the following conditions are met.

- The individual accepts responsibility to keep all tools and prohibited items within his/her immediate span or control so that no unauthorized person is able to access them.
- All tools are to be transported in a secure bag or toolbox so they are inaccessible to passengers at all times (no tool belts).
- Tools will be used discretely, stored immediately, and secured and locked whenever possible.
- Unbadged personnel requiring the use of tools in the sterile areas must be under continuous escort of a badged employee. **The badged employee providing the escort will be held fully responsible for ensuring compliance with these rules.**

All unattended tools found in the Sterile Area will be confiscated by the Department of Aviation, and the employee's badge may be suspended or revoked. Personnel not complying with these procedures may be issued an Airport Security Warning, Citation, and/or be subject to TSA sanctions.

Your signature below indicates that you fully understand and accept the responsibilities outlined in this acknowledgment of responsibility.

---	---	---	---
SIGNATURE	**PRINT NAME**	**COMPANY**	**DATE**

ABIA TOOL INVENTORY LIST

PROJECT NAME: _____

CONTRACTOR NAME: _____

DATE	TIME IN	TIME OUT	TOOL DESCRIPTION	CLASS A	CLASS B	QTY IN	QTY OUT

Inventory Prepared By: _____

SGTO In Checker _____/DATE SGTO Out Checker _____/DATE

ABIA DAILY INVENTORY LIST

PROJECT NAME: _____

CONTRACTOR NAME: _____

Date	Time	Remarks	OPSEC Notified	Initials
		☐ – All tools accounted for. ☐ – Tool(s) missing:	Y N	
		☐ – All tools accounted for. ☐ – Tool(s) missing:	Y N	
		☐ – All tools accounted for. ☐ – Tool(s) missing:	Y N	
		☐ – All tools accounted for. ☐ – Tool(s) missing:	Y N	
		☐ – All tools accounted for. ☐ – Tool(s) missing:	Y N	
		☐ – All tools accounted for. ☐ – Tool(s) missing:	Y N	
		☐ – All tools accounted for. ☐ – Tool(s) missing:	Y N	
		☐ – All tools accounted for. ☐ – Tool(s) missing:	Y N	
		☐ – All tools accounted for. ☐ – Tool(s) missing:	Y N	
		☐ – All tools accounted for. ☐ – Tool(s) missing:	Y N	
		☐ – All tools accounted for. ☐ – Tool(s) missing:	Y N	
		☐ – All tools accounted for. ☐ – Tool(s) missing:	Y N	
		☐ – All tools accounted for. ☐ – Tool(s) missing:	Y N	
		☐ – All tools accounted for. ☐ – Tool(s) missing:	Y N	
		☐ – All tools accounted for. ☐ – Tool(s) missing:	Y N	
		☐ – All tools accounted for. ☐ – Tool(s) missing:	Y N	
		☐ – All tools accounted for. ☐ – Tool(s) missing:	Y N	
		☐ – All tools accounted for. ☐ – Tool(s) missing:	Y N	

AIRPORT COMMUNICATIONS # (512) 530-2242

Austin-Bergstrom International Airport
Vehicle Registration LOGO

TO: Security and ID Office Aviation Department	FROM: (Sponsor)

A. Request AOA access authorization and registration for the following vehicle:

1. Name: (Last) _____ (First)_____ (Middle)_____
   Badge #_____ Expires:_____ Insurance Company:_____
2. Vehicle: _____ Model:_____ Color:_____ Year:_____
   License Plate:_____ State:_____
3. Required AOA/SIDA Clearance:
   [ ] Main Terminal Ramp [ ] RCCF [ ] Fuel Facility [ ] Runways and Taxiways
   [ ] Maintenance Ramp [ ] Cargo Ramp
4. Vehicle Identified by: [ ] Company Logo

I am authorized to request AOA/SIDA and restricted area access issuance of security related items (signature on file with the Security and ID office and certify that the operation of this vehicle on the AOA/SIDA is necessary and in conjunction with official business. The persons who will be operating this vehicle have been briefed on the Airport Security Program and operating procedures for the AOA/SIDA.

Signature:_____ Badge #:_____ Date:_____
DOA Project Manager
Signature:_____ Badge #:_____ Date:_____

B. Verification: [ ] Requestor's Signature [ ] Recipient's Badge Number [ ] Proof of Insurance

Signature:_____ Badge #:_____ Date:_____
DOA Security

C. I understand the security requirements and my responsibilities under the Airport Security Program relating to Authorization for my access and operating procedures on the AOA/SIDA. I accept these responsibilities and agree to comply with requirements of the Airport Security Program and safeguard my TOPCAP/LOGO to prevent unauthorized use.

Signature:_____ Badge # _____ Date:_____

D. LOGO Revocation::
Signature:_____ Badge #:_____ Date:_____
Department of Aviation

ARTICLE 1 - GENERAL

1.1 RELATED DOCUMENTS

The following documents are a part of this section:

All documents in Bidding Requirements, Contract Forms and Conditions of the Contract.

Other sections of Division 1 - General Requirements apply to this section.

1.2 DESCRIPTION AND INTENT OF THE WORK

No asbestos containing material (ACM) shall be brought onto the Project site, and/or incorporated into the Project construction without the written consent of the OWNER. Any asbestos containing material found at any time including after contract completion, to have been brought onto the site or incorporated into the Project construction by the CONTRACTOR, or any Subcontractors, Sub-Subcontractors or Suppliers, shall be removed and disposed of in accordance with the then current governmental regulatory standards.

All costs associated with the inspection, sampling, testing, removal and disposal of ACM as described above shall be paid by the CONTRACTOR.

1.3 DEFINITIONS

ASBESTOS: The asbestiform varieties of serpentine (chrysotile), riebeckite (crocidolite) cummingtonite-grunerite (amosite), anthophyllite, actinolite and tremolite.

ASBESTOS CONTAINING MATERIAL (ACM): Any material containing more than one percent (1%) by weight of asbestos of any type or mixture of types.

ASBESTOS CONTAINING BUILDING MATERIAL (ACBM): Any material used in the construction of, or incorporated into the construction of, any building that contains more than one percent (1%) by weight of asbestos of any type or mixture of types.

MSDS: A material safety data sheet (MSDS) is a form containing data regarding the properties of component substances that comprise a manufactured product. They are a basic hazard communication tool that gives details on chemical and physical dangers, safety procedures, and emergency responses for chemicals.

1.4 QUALITY ASSURANCE

PROHIBITION OF ASBESTOS CONTAINING MATERIALS

The E/A has been instructed to not permit any asbestos containing materials to be specified, requested or approved for use in conjunction with this Project.

The E/A has signed the following:

A. 01900A Statement of Non-Inclusion of Asbestos Containing Material (E/A, Prior to Design): stating that the Engineer/Architect shall not specify, request or approve any ACM in this Project without prior written approval of OWNER.

B. 01900B Statement of Non-Inclusion of Asbestos Containing Material (E/A, After Design): stating that the Engineer/Architect has not specified, requested or approved any ACM in this Project without the prior written approval of the OWNER, and that any ACM allowed in this Project is identified in the Statements.

These Statements are included in the Construction Documents.

ASBESTOS CONTAINING MATERIALS PROHIBITED FROM SITE

No asbestos containing materials will be permitted as part of the Project construction. The following list is intended to be used as a general guide to show which types of materials are suspected to contain asbestos:

- Cement Pipes
- Cement Wallboard
- Cement Siding
- Asphalt Floor Tile
- Vinyl Floor Tile
- Vinyl Sheet Flooring/vinyl wall coverings
- Flooring Backing
- Construction Mastics (floor tile, carpet, ceiling tile, etc.)
- Acoustical Plaster
- Decorative Plaster / stucco
- Textured Paintings/Coatings
- Ceiling Tiles and Lay-in Panels
- Spray-Applied Insulation
- Blown-in Insulation
- Fireproofing Materials
- Taping Compounds (thermal)
- Packing Materials (for wall/floor penetrations)
- High Temperature Gaskets
- Laboratory Gloves
- Fire Blankets
- Fire Curtains
- Elevator Equipment Panels
- Elevator Brake Shoes
- HVAC Duct Insulation
- Boiler Insulation
- Breeching Insulation
- Ductwork Flexible Fabric Connections
- Cooling Towers
- Pipe Insulation (corrugated air-cell, block, etc.)
- Heating and Electrical Ducts
- Electrical Panel Partitions
- Electric Cloth
- Electric Wiring Insulation
- Chalkboards
- Roofing Shingles / tiles / membranes
- Roofing Felt
- Roof Coatings
- Base Flashing
- Thermal Paper Products
- Fire Doors
- Caulking/Putties
- Adhesives / mastics
- Wallboard
- Joint Compounds
- Spackling Compounds
- Laboratory hoods/tabletops
- CMU block fill materials

If any of these suspect materials are specified for use on the Project, and if they do not have specific labelling identifying them as asbestos free, then the CONTRACTOR shall notify the OWNER immediately. Laboratory analysis of the material by an OWNER-approved laboratory shall be performed at CONTRACTOR's expense in order to warrant that the material does not contain asbestos. A copy of the package labelling or results of laboratory testing must be provided to the OWNER prior to inclusion of the specified material during construction. Contractor's construction submittals must include MSDSs for all new materials used in construction of buildings, facilties and infrastructure.

1.5 SUBMITTALS

NON-USE OF ASBESTOS AFFIDAVITS

At the time that the CONTRACTOR signs the Agreement, they shall sign a Non-Use of Asbestos Affidavit (Contractor Prior to Construction), Contract Document 00680. This Affidavit certifies that the CONTRACTOR agrees that they will not allow any asbestos containing materials to be incorporated into the construction of the Project or allow any asbestos containing building materials on the site for which the OWNER has not given prior written approval.

Prior to final payment, the CONTRACTOR will provide to the OWNER a Non-Use of Asbestos Affidavit (Contractor After Construction), Contract Document 00681. This Affidavit certifies that the CONTRACTOR did not allow asbestos containing materials to be incorporated into the construction or

allowed any asbestos containing building materials on the site for which the OWNER of the Project did not give prior written approval.

ASBESTOS CONTAINING MATERIALS: When any asbestos containing materials are used on the Project, provide the following information:

A detailed description of the material containing the asbestos.

The type and percent of asbestos contained in the material.

The quantity of the materials used, including the square footage, or in the case of pipe insulation, the size and linear footage.

A drawing showing the exact location of any asbestos containing materials.

Final payment shall be withheld until the above described Affidavits, submittals and/or information are received and approved.

END

CITY OF AUSTIN

STATEMENT OF NON-INCLUSION OF ASBESTOS CONTAINING MATERIAL

STATE OF TEXAS
COUNTY OF TRAVIS

ENGINEER/ARCHITECT PRIOR TO DESIGN

"My name is Byron Chavez, hereinafter known as Authorized Representative.

"I am over the age of 18 years and I have never been convicted of a crime. I am the Project Engineer of RS&H, Inc. hereinafter known as ENGINEER/ARCHITECT.

"I am fully competent to make this statement. I have personal knowledge of the facts set forth below and they are all true and correct.

"WHEREAS ENGINEER/ARCHITECT has been selected to provide designs, to prepare the bid and construction documents, and to assist the City of Austin, Texas, hereinafter known as OWNER, during the construction of Bus Shelter Improvements, located at 3600 Presidential Blvd., Austin-Bergstrom International Airport, Austin, Texas, hereinafter known as Project, and

"WHEREAS asbestos in a dust form is a recognized health hazard, and
"WHEREAS the OWNER desires not to have any asbestos containing materials used or incorporated into the construction of the Project;
"THEREFORE the ENGINEER/ARCHITECT affirms that to the best of its knowledge and belief:

1. The ENGINEER/ARCHITECT, any person, firm or organization representing or represented by the ENGINEER/ARCHITECT, shall not knowingly specify, request, or approve for use in conjunction with the Project, any asbestos containing materials or any other materials defined as containing asbestos by any laws, rules or regulations promulgated by the United States Government, the State of Texas or any governmental organization or agency operating under the authority of either of those entities.
2. Realizing that there might be materials required in which a satisfactory non-asbestos containing material cannot be obtained, the ENGINEER/ARCHITECT will do the following before specifying any asbestos containing material:
   A. Inform the OWNER's Project Manager for this Project, in writing, of any intent to specify asbestos containing materials.
   B. Receive written approval from the City of Austin Project Manager for the specifying of any asbestos containing materials.
   C. At the completion of the design phase, and before the OWNER receives any bids for this Project, provide to the Project Manager, in writing, the proposed location of any asbestos containing materials, the type of asbestos they contain, and the percent of asbestos by types.
3. The ENGINEER/ARCHITECT states its understanding that if any asbestos containing materials not approved by the OWNER for inclusion into the Project, are determined, as a result of any inspection and sample analysis performed by an individual(s) and/or firm(s) certified and/or licensed to perform such inspection by the United States Government and/or the State of Texas, to have been knowingly specified, requested and/or approved by the ENGINEER/ARCHITECT for inclusion in the Project, the OWNER shall look to the ENGINEER/ARCHITECT for reimbursement of any and all costs incurred in the removal and/or other abatement of said asbestos containing materials.
4. ENGINEER/ARCHITECT further understands that OWNER shall also look to the ENGINEER/ARCHITECT for any and all damages to OWNER which result from the inability of the OWNER to use any portion or all of the Project due to the incorporation of asbestos containing materials that have been knowingly specified, requested and/or approved by the ENGINEER/ARCHITECT.
5. ENGINEER/ARCHITECT further understands that OWNER will pursue reimbursement of any said cost and compensation for any said damages from the ENGINEER/ARCHITECT by any and every means within OWNER's right and power.

Signature of Authorized Representative: Byron Chavez

STATE OF TEXAS
COUNTY OF TRAVIS

ON May 27, 2016 personally appeared Byron Chavez and been duly sworn by me, subscribed to the foregoing statement and has stated that the facts stated therein are true and correct.

TRISTAN DAVIDSON
Notary Public, State of Texas
My Commission Expires
September 15, 2018

Notary Public, State of Texas: Tristan Davidson

Printed Name of Notary: Tristan Davidson

My Commission Expires: September 15, 2018

01605A.00/110392

CITY OF AUSTIN

STATEMENT OF NON-INCLUSION OF ASBESTOS CONTAINING MATERIAL

ENGINEER/ARCHITECT AFTER DESIGN

STATE OF TEXAS
COUNTY OF TRAVIS

"My name is Byron Chavez, hereinafter known as Authorized Representative.

"I am over the age of 18 years and I have never been convicted of a crime. I am the Project Engineer of RS&H, Inc. hereinafter known as ENGINEER/ARCHITECT.

"I am fully competent to make this statement. I have personal knowledge of the facts set forth below and they are all true and correct.

"WHEREAS ENGINEER/ARCHITECT has been selected to provide designs, to prepare the bid and construction documents, and to assist the City of Austin, Texas, hereinafter known as OWNER, during the construction of Bus Shelter Improvements, located at 3600 Presidential Blvd. Austin-Bergstrom International Airport Austin, Texas, hereinafter known as Project, and

"WHEREAS asbestos in a dust form is a recognized health hazard, and
"WHEREAS the OWNER desires not to have any asbestos containing materials used or incorporated into the construction of the Project;
"THEREFORE the ENGINEER/ARCHITECT affirms that to the best of its knowledge and belief:

1. The ENGINEER/ARCHITECT, any person, firm or organization representing or represented by the ENGINEER/ARCHITECT, shall not knowingly specify, request, or approve for use in conjunction with the Project, any asbestos containing materials or any other materials defined as containing asbestos by any laws, rules or regulations promulgated by the United States Government, the State of Texas or any governmental organization or agency operating under the authority of either of those entities.
2. The only exceptions to the above statement are the following materials that are required because a satisfactory non-asbestos containing material cannot be obtained. The inclusion of these materials has been approved by the OWNER's Project Manager for this Project.

   _____

   _____

   _____

   _____

3. The ENGINEER/ARCHITECT states its understanding that if any asbestos containing materials not approved by the OWNER for inclusion into the Project, are determined, as a result of any inspection and sample analysis performed by an individual(s) and/or firm(s) certified and/or licensed to perform such inspection by the United States Government and/or the State of Texas, to have been knowingly specified, requested and/or approved by the ENGINEER/ARCHITECT for inclusion in the Project, the OWNER shall look to the ENGINEER/ARCHITECT for reimbursement of any and all costs incurred in the removal and/or other abatement of said asbestos containing materials.
4. ENGINEER/ARCHITECT further understands that OWNER shall also look to the ENGINEER/ARCHITECT for any and all damages to OWNER which result from the inability of the OWNER to use any portion or all of the Project due to the incorporation of asbestos containing materials that have been knowingly specified, requested and/or approved by the ENGINEER/ARCHITECT.
5. ENGINEER/ARCHITECT further understands that OWNER will pursue reimbursement of any said cost and compensation for any said damages from the ENGINEER/ARCHITECT by any and every means within OWNER's right and power.

Signature of Authorized Representative: Byron Chavez

STATE OF TEXAS
COUNTY OF TRAVIS

ON May 27, 2016 personally appeared Byron Chavez and been duly sworn by me, subscribed to the foregoing statement and has stated that the facts stated therein are true and correct.

TRISTAN DAVIDSON
Notary Public, State of Texas
My Commission Expires
September 15, 2018

Notary Public, State of Texas Tristan Davidson

Printed Name of Notary Tristan Davidson

My Commission Expires: September 15, 2018

01605B/110392

Item No. 104S
Removing Portland Cement Concrete

104S.1 Description

This item shall govern the demolition, removal and satisfactory disposal of existing Portland cement concrete, as classified, at locations indicated on the Drawings or as directed by the Engineer or designated representative.

This specification is applicable for projects or work involving either inch-pound or SI units. Within the text inch-pound units are given preference followed by SI units shown within parentheses.

104S.2 Submittals

The submittal requirements of this specification item may include:

A. A permit when utility adjustments are made in the right-of-way, and

B. A plan for removal and deposition of all 'broken up' existing Portland cement (p.c.) concrete materials and debris.

104S.3 Classification

Existing Portland cement concrete, when removed under this section, will be classified as follows:

1. Concrete Curb will include curb, curb and gutter and combinations thereof,
2. Concrete Slabs will include, but not be limited to, house slabs, patio slabs, porch slabs, concrete riprap and concrete pavement,
3. Sidewalks and Driveways will include concrete sidewalks and driveways,
4. Concrete Walls will include all walls, regardless of height, and wall footings,
5. Concrete Steps will include all steps and combinations of walls and steps,
6. Abandoned Foundations will include abandoned utility foundations,
7. Miscellaneous Concrete shall include all other concrete items, which are not identified in items 1 through 6 above.

104S.4 Materials

Mortar shall conform to mortar specified in Standard Specification Item No. 403S, “Concrete for Structures”.

104S.5 Construction Methods

Prior to commencement of this work, all required erosion control and tree protection measures shall be in place. The existing utilities shall be located and protected as specified in the Standard Contract Documents, Section 00700, "General Conditions". A permit shall be required when utility adjustments are to be made in preparation for

highway construction, as specified in Section 5.2.0 of the City of Austin Utilities Criteria Manual.

The existing Portland cement concrete shall be broken up, removed in accordance with Item No. 101S, "Preparing Right of Way" and disposed of by the Contractor and deposited at a permitted disposal site.

When it is specified that only a portion of the existing Portland cement (p.c.) concrete is to be removed and that the remaining p.c. concrete will continue to serve its purpose, special care shall be exercised to avoid damage to that portion which will remain in place. Unless otherwise established by the Engineer or designated representative, existing p.c. concrete shall be cut to the neat lines, that are indicated on the Drawings, by sawing with an appropriate type circular type circular concrete saw to a minimum depth of 1/2 inch (12.5 mm). Any reinforcing steel encountered shall be cut off 1 inch (25 mm) inside of p.c. concrete sawed line. Any existing p.c. concrete, which is damaged or destroyed beyond the neat lines so established, shall be replaced at the Contractor's expense. Remaining p.c. concrete shall be mortared to protect the reinforcing steel and provide a neat clean appearance.

When reinforcement is encountered during the removal of portions of existing structures to be modified, a minimum of 1 foot (300 mm) of steel length shall be cleaned of all old p.c. concrete and left in place to tie into the new construction where applicable. All unsuitable material shall be removed and replaced with approved material. All foundations, walls or other objectionable material shall be removed to a minimum depth of 18 inches (450 mm) below all structures and 12 inches (300 mm) below areas to be vegetated.

104S.6 Measurement

When included in the contract as a separate pay item, the removal of p.c. concrete curb and p.c. concrete wall as prescribed above will be measured by the lineal foot (meter: 1 meter is equal to 3.281 feet) in its original position regardless of the dimensions or size. The removal of p.c. concrete slabs, p.c. concrete sidewalks and driveways, as prescribed above, will be measured by the square foot (square meter: 1 square meter is equal to 10.764 square feet) in original position, regardless of the thickness and existence of reinforcing steel. Portland cement concrete steps removed will be measured per lineal foot (meter: 1 meter is equal to 3.281 feet) of each individual step tread including the bottom step. The removal of p.c. concrete foundations will be measured per each individual foundation. The removal of miscellaneous concrete will be measured per lump sum.

104S.7 Payment

The work and materials presented herein will generally not be paid for directly, but shall be included in the unit price bid for the item of construction in which this item is used.

When specified in the contract bid form as a separate pay item, the item will be paid for at the contract unit bid price(s) for "Remove P.C. Concrete Curb", "Remove P.C. Concrete Slab", "Remove P.C. Concrete Sidewalks and Driveways", "Remove P.C. Concrete Walls", "Remove P.C. Concrete Steps", "Remove P.C. Concrete Foundations" and "Remove Miscellaneous P.C. Concrete". The bid prices shall include full compensation for all Work herein specified, including the disposal of all material not required in the

Work, the furnishing of all materials, equipment, tools, labor and incidentals necessary to complete the Work.

Payment will be made under one of the following:

Pay Item No.	**104S-A:**	Remove P.C. Concrete Curb	Per Lineal foot.
Pay Item No.	**104S-B:**	Remove P.C. Concrete Slab	Per Square foot.
Pay Item No.	**104S-C:**	Remove P.C. Concrete Sidewalks and Driveways	Per Square foot
Pay Item No.	**104S-D:**	Remove P.C. Concrete Wall	Per Lineal foot.
Pay Item No.	**104S-E:**	Remove P.C. Concrete Steps	Per Lineal foot.
Pay Item No.	**104S-F:**	Remove P.C. Concrete Foundations	Per Each.
Pay Item No.	**104S-G:**	Remove Miscellaneous P.C. Concrete	Per Lump Sum.

End

SPECIFIC CROSS REFERENCE MATERIALS
Specification Item 104S, "REMOVING CONCRETE"

City of Austin Standard Contract Documents

Designation	Description
00700	General Conditions

City of Austin Utilities Criteria Manual

Designation	Description
Section 5.2.0	Permit for Excavation in the Public Right-of-Way

City of Austin Standard Specifications

Designation	Description
Item No. 101S	Preparing Right of Way
Item No. 110S	Street Excavation
Item No. 111S	Excavation
Item No. 120S	Channel Excavation
Item No. 132S	Embankment
Item No. 403S	Concrete for Structures
Item No. 610S	Preservation of Trees and Other Vegetation

RELATED CROSS REFERENCE MATERIALS

City of Austin Standard Contract Documents

Designation	Description
01500	Temporary Facilities
01550	Public Safety and Convenience

The Code of the City of Austin, Code of Ordinances, Volume 1

Designation	Description
Article 14-11-181	Permit Required
Article 14-11-189	Conditions for Permit Issuance
Article 14-11-190	Excavation Sequence and Permit Term

City of Austin Standard Specifications

Designation	Description
Item No. 201S	Subgrade Preparation
Item No. 602S	Sodding for Erosion Control
Item No. 604S	Seeding for Erosion Control

Item No. 622S	Diversion Dike
Item No. 628S	Sediment Containment Dikes
Item No. 642S	Silt Fence

RELATED CROSS REFERENCE MATERIALS - Continued
Specification Item 104S, "REMOVING CONCRETE"

City of Austin Standard Details

Designation	Description
610S-1	Tree Protection Fence Locations
610S-2	Tree Protection Fence, Type B Chainlink
610S-3	Tree Protection Fence, Type B Wood
610S-4	Tree Protection Fence, Modified Type A
610S-5	Tree Protection Fence, Modified Type B
621S-1	Diversion
622S-1	Diversion Dike
624S-1	Earth Outlet Sediment Trap
625S-1	Grade Stabilization Structure
627S-1	Grass Lined Swale
627S-2	Grass Lined Swale With Stone Center
628S	Triangular Sediment Filter Dike
628S-1	Hay Bale Dike
629S-1	Brush Berm
630S-1	Interceptor Dike
631S-1	Interceptor Swale
632S-1	Storm Inlet Sediment Trap
633S-1	Landgrading
634S-1	Level Spreader
635S-1	Perimeter Dike
636S-1	Perimeter Swale
637S-1	Pipe Slope Drain (Flexible)
637S-2	Pipe Slope Drain (Flexible)
638S-1	Pipe Outlet Sediment Trap
639S-1	Rock Berm
641S-1	Stabilized Construction Entrance
642S-1	Silt Fence
643S-1	Stone Outlet Structure
644S-1	Stone Outlet Sediment Trap

Texas Department of Transportation: Standard Specifications for Construction and Maintenance of Highways, Streets, and Bridges

Designation	Description
Item No. 100	Preparing Right of Way
Item No. 104	Removing Concrete
Item No. 110	Excavation
Item No. 112	Subgrade Widening
Item No. 132	Embankment
Item No. 158	Specialized Excavation Work
Item No. 420	Concrete Structures

Item No. 111S
Excavation

111S.1 Description

This item shall govern: (1) the excavation and proper utilization or satisfactory disposal of all excavated materials, of whatever character, within the limits of the Work and (2) construction, compaction, shaping and finishing of all designated earthwork areas in accordance with the specification requirements outlined herein and in conformity with the required lines, grades and typical cross sections indicated on the Drawings or as directed by the Engineer or designated representative. When not otherwise included in the Contract Documents, this item shall include the work described in Specification Item Nos. 101S, "Preparing Right of Way", No. 102S, "Clearing and Grubbing", No. 104S, "Removing Portland Cement Concrete", No. 132S "Embankment" and No. 201S, "Subgrade Preparation".

This specification is applicable for projects or work involving either inch-pound or SI units. Within the text inch-pound units are given preference followed by SI units shown within parentheses.

111S.2 Submittals

The submittal requirements of this specification item may include:

A. A permit when utility adjustments are made in the right-of-way,

B. A plan for removal and deposition of all 'Waste' materials, and

C. A Blasting Permit if blasting is required and allowed on the project.

111S.3 Classification

All excavation shall be unclassified and shall include all materials encountered regardless of their nature or the manner in which they are removed.

111S.4 Construction Methods

Prior to commencement of this work, all required erosion control and tree protection measures shall be in place. The existing utilities shall be located and shall be protected as specified in the Standard Contracts Document Section 00700, "General Conditions" and/or indicated on the Drawings. A permit shall be required when utility adjustments are to be made in preparation for construction in the right-of-way, as specified in Section 5.2.0 of the City of Austin Utilities Criteria Manual.

Construction equipment shall not be operated nor construction materials stockpiled under the canopies of trees, unless otherwise indicated on the Drawings. Excavation or embankment materials shall not be placed within the drip line of trees until tree wells are constructed, that conform to Specification Item No. 610S, “Preservation of Trees and Other Vegetation”.

All excavation shall be performed as specified herein and shall conform to the established alignment, grades and cross sections indicated on the Drawings. Suitable excavated

materials shall be utilized, insofar as practical, in constructing required embankments. The construction of all embankments shall conform to Specification Item No. 132S, "Embankment". No material shall be stockpiled within the banks of a waterway.

Unsuitable excavated materials or excavation in excess of that needed for construction shall be known as "Waste" and shall become the property of the Contractor. Unsuitable material encountered below the subgrade elevation in roadway cuts, when declared “Waste” by the Engineer or designated representative, shall be replaced with material from the roadway excavation or with other suitable material as approved by the Engineer. It shall become the Contractor’s responsibility to dispose of this material off the limits of the right of way in an environmentally sound manner at a permitted disposal site.

All blasting shall conform to the Provisions of the Standard Contract Document Section 01550, "Public Safety and Convenience". In all cases, a Blasting Permit must be obtained in advance from the City of Austin, Department of Public Works and Transportation.

Adequate dewatering and drainage of excavation shall be maintained throughout the time required to complete the excavation work.

111S.5 Measurement

All accepted excavation will be measured by either Method A or B as follows:

(1) Method A

Measurement of the volume of excavation in cubic yards (cubic meters: 1 square meter is equal to 1.306 square yards) by the average end area methods. Cross-sectional areas shall be computed from the existing ground surface to the established line of the subgrade, as shown on typical sections in the Drawings, over the limits of the right of way or other work limits, including parkway slopes and sidewalk areas.

(2) Method B

Measurement of the volume of excavation in cubic yards (cubic meters: 1 square meter is equal to 1.306 square yards), based upon the average end area method taken from pre-construction cross sections and planned grades. The planned quantities for excavation will be used as the measurement for payment for this item.

111S.6 Payment

This item will be paid for at the contract unit bid price for "Excavation", as provided under measurement Method A or B as included in the bid. The bid price shall include full compensation for all work herein specified including dewatering, drainage, subgrade preparation, unless otherwise indicated, and the furnishing of all materials, equipment, tools, labor and incidentals necessary to complete the work.

Payment will be made under one of the following:

Pay Item No. 111S-A:	Excavation	Per Cubic Yard.
Pay Item No. 111S-B:	Excavation, Plan Quantity	Per Cubic Yard.

End

SPECIFIC CROSS REFERENCE MATERIALS
Specification Item 111S, "EXCAVATION"

City of Austin Standard Contract Documents

Designation	Description
00700	General Conditions
01550	Public Safety and Convenience

City of Austin Utilities Criteria Manual

Designation	Description
Section 5.2.0	Permit for Excavation in the Public Right-of-Way

City of Austin Technical Specifications

Designation	Description
Item No. 101S	Preparing Right of Way
Item No. 102S	Clearing and Grubbing-
Item No. 104S	Removing Portland Cement Concrete
Item No. 132S	Embankment
Item No. 201S	Subgrade Preparation
Item No. 236S	Proof Rolling
Item No. 610S	Preservation of Trees and Other Vegetation

RELATED CROSS REFERENCE MATERIALS
Specification Item 111S, "EXCAVATION"

City of Austin Standard Contract Documents

Designation	Description
01500	Temporary Facilities

City of Austin Standard Specifications

Designation	Description
Item No. 120S	Channel Excavation
Item No. 203	Lime Treatment for Materials In Place
Item No. 204S	Portland Cement Treatment for Materials In Place
Item No. 230S	Rolling (Flat Wheel)
Item No. 232S	Rolling (Pneumatic Tire)
Item No. 234S	Rolling (Tamping)
Item No. 602S	Sodding for Erosion Control
Item No. 604S	Seeding for Erosion Control
Item No. 622S	Diversion Dike
Item No. 628S	Sediment Containment Dikes
Item No. 642S	Silt Fence

City of Austin Standard Details

Designation	Description
No. 610S-1	Tree Protection Fence Locations
No. 610S-2	Tree Protection Fence, Type B Chainlink
No. 610S-3	Tree Protection Fence, Type B Wood
No. 610S-4	Tree Protection Fence, Modified Type A

No. 610S-5	Tree Protection Fence, Modified Type B
No. 621S-1	Diversion
No. 622S-1	Diversion Dike
No. 624S-1	Earth Outlet Sediment Trap
No. 625S-1	Grade Stabilization Structure
No. 627S-1	Grass Lined Swale
No. 627S-2	Grass Lined Swale With Stone Center
No. 628S	Triangular Sediment Filter Dike

City of Austin Standard Details

Designation	Description
No. 628S-1	Hay Bale Dike
No. 629S-1	Brush Berm
No. 630S-1	Interceptor Dike
No. 631S-1	Interceptor Swale
No. 632S-1	Storm Inlet Sediment Trap
No. 633S-1	Landgrading
No. 634S-1	Level Spreader
No. 635S-1	Perimeter Dike
No. 636S-1	Perimeter Swale
No. 637S-1	Pipe Slope Drain (Flexible)
No. 637S-2	Pipe Slope Drain (Flexible)
No. 638S-1	Pipe Outlet Sediment Trap
No. 639S-1	Rock Berm
No. 641S-1	Stabilized Construction Entrance
No. 642S-1	Silt Fence
No. 643S-1	Stone Outlet Structure
No. 644S-1	Stone Outlet Sediment Trap

The Code of the City of Austin, Code of Ordinances, Volume 1

Designation	Description
Article 14-11-181	Permit Required
Article 14-11-189	Conditions for Permit Issuance
Article 14-11-190	Excavation Sequence and Permit Term

Texas Department of Transportation: Standard Specifications for Construction and Maintenance of Highways, Streets, and Bridges

Designation	Description
Item No. 100	Preparing Right of Way
Item No. 110	Excavation
Item No. 112	Subgrade Widening
Item No. 132	Embankment
Item No. 150	Blading
Item No. 158	Specialized Excavation Work
Item No. 160	Furnishing and Placing Topsoil
Item No. 164	Seeding for Erosion Control
Item No. 204	Sprinkling
Item No. 210	Rolling (Flat Wheel)
Item No. 211	Rolling (Tamping)
Item No. 213	Rolling (Pneumatic Tire)
Item No. 260	Lime Treatment for Materials Used as Subgrade (Road Mixed)
Item No. 265	Lime-Fly Ash (LFA) Treatment for Materials Used as Subgrade

Texas Department of Transportation: Manual of Testing Procedures

Designation	Description
Tex-103-E	Determination of Moisture Content of Soil Materials
Tex-104-E	Determination of Liquid Limit of Soils
Tex-105-E	Determination of Plastic Limit of Soils
Tex-106-E	Method of Calculating the Plasticity Index of Soils
Tex-114-E	Laboratory Compaction Characteristics and Moisture-Density Relationship of Subgrade & Embankment Soil
Tex-115-E	Field Method for Determination of In-Place Density of Soils and Base Materials

Item No. 201S
Subgrade Preparation

201S.1 Description

This item shall govern scarifying; blading and rolling the subgrade to obtain a uniform texture and provide as nearly as practicable a uniform density for the top 6 inches (150 mm) of the subgrade.

This specification is applicable for projects or work involving either inch-pound or SI units. Within the text and accompanying tables, the inch-pound units are given preference followed by SI units shown within parentheses.

201S.2 Submittals

The submittal requirements of this specification item may include:

A. A plan identifying classification and characteristics (P.I., optimum moisture-density, etc.) of insitu subgrade soils, as well as the source, classification and characteristics of any proposed borrow material,
B. Type and size of equipment proposed to produce the required compaction, and
C. Compaction (moisture-density, etc) test results for in-situ subgrade soils and/or borrow materials.

201S.3 Construction Methods

Prior to initiation of subgrade preparation activities, all operations involving Standard Specification Item No. 101S," Preparing Right of Way" and/or Standard Specification Item No. 102S, "Clearing and Grubbing" shall be completed. The surface of the subgrade shall be scarified and shaped in conformity with the typical sections and the lines and grades indicated on the Drawings; by the removal of existing material or addition of approved material as established by the Engineer or designated representative. Any deviation in the subgrade cross section which exceeds 1/2 inch in a length of 10 feet (12 mm in a length of 3 meters), measured longitudinally, shall be corrected by loosening, adding or removing material, and then reshaping and compacting by sprinkling and rolling.

All unsuitable material shall be removed and replaced with approved material. All foundations, walls or other objectionable material shall be removed in accordance with Standard Specification Item No. 104S, "Removing Portland Cement Concrete" to a minimum depth of 18 inches (450 mm) under all structures and 12 inches (300 mm) under areas to be vegetated. All holes, ruts and depressions shall be filled with approved material and compacted by approved methods.

The subgrade shall be prepared sufficiently in advance to insure satisfactory prosecution of the Work. The Contractor will be required to set blue tops for the subgrade on the centerline, at the quarter points and along the curb lines or edge of pavement at maximum intervals of 50 feet (15 meters). The subgrade shall be tested by proof rolling

in conformity with Standard Specification Item No. 236S, "Proof Rolling" prior to placement of the first course of base material. Any unstable or spongy subgrade areas identified by proof rolling shall be corrected either by additional re-working, drying and compaction, or by removal and replacement of unsuitable materials. When specifically directed by the Engineer or designated representative, the Contractor shall re-work the subgrade* as follows:

A. Remove the unstable subgrade to the full depth of the unstable insitu material or to a minimum depth of 6 inches (150 mm), whichever is greater;
B. Spread the material over a sufficient area to allow reworking of the excavated material;
C. Disc, scarify or otherwise breakup the excavated material and allow to dry (Note: If approved by the Engineer or designated representative, the addition of lime or other additive may be used to aid in the drying process or to stabilize the unstable material);
D. Fill the excavated area with the re-worked material and compact to specified densities; and
E. Proof roll the re-worked area.

* The Rework process will not be allowed for unstable organic subgrade soils. These type soils will be permanently removed and replaced with materials approved by the Engineer or designated representative.

All suitable material removed in accordance with Standard Specification Item No, 111S, "Excavation", may be utilized in the subgrade with the approval of the Engineer or designated representative. All other material required for completion of the Subgrade, including those defined in accordance with Specification Item No. 130S, "Borrow", shall also be subject to approval by the Engineer or designated representative.

It is the intent of this specification to provide the required density and moisture control for the subgrade based on the plasticity characteristics of the approved materials. The subgrade materials shall be sprinkled as required and compacted to the extent necessary to provide the density specified below, unless otherwise indicated on the Drawings. The Plasticity Index (P.I.) will be established in accordance with TxDOT Test Methods Tex-104-E, Tex-105-E and Tex-106-E. The density determination will be made in accordance with TxDOT Test Method Tex-114-E and field density measurements will be made in accordance with TxDOT Test Method Tex-115-E.

Description	Density, Percent	Moisture
Non-swelling Soils (P.I. less than 20)	Not less than 95	
Swelling Soils (P.I. between 20 and 35)	Not less than 95 nor more than 102	Not less than optimum
Swelling Soils (P.I. greater than 35)	Not less than 95 nor more than 100	Not less than optimum

Subgrade materials on which planting or turf will be established shall be compacted to a minimum of 85 percent of the density as determined in accordance with TxDOT Test

Method Tex-114-E. Field tests for density in accordance with TxDOT Test Method Tex-115-E will be made as soon as possible after compaction operations are completed. If the material fails to meet the density specified, it shall be reworked as necessary to obtain the density required.

Prior to placement of any base materials, the in-place density and moisture content of the top 6 inches (150 mm) of compacted subgrade shall be checked. If the tests indicate that the relative density and moisture do not meet the limits specified in the table above, the subgrade shall be reworked as necessary to obtain the specified compaction and moisture content. All initial testing will be paid for by the City of Austin. All retesting shall be paid for by the Contractor.

201S.4 Measurement

All acceptable subgrade preparation when included in the contract as a separate pay item, will be measured by the square yard (square meter: 1 square meter equals 1.196 Square yards). The measured area includes the entire width of the roadway for the entire length as indicated on the Drawings.

201S.5 Payment

The work and materials presented herein will generally not be paid for directly, but shall be included in the unit price bid for the item of construction in which this item is used when specified as a separate pay item in the contract bid form, subgrade preparation shall be measured as specified above and paid for at the contract unit bid price for "Subgrade Preparation". The bid price shall include full compensation for all work herein specified, including the furnishing of all materials, equipment, tools and labor and incidentals necessary to complete the work.

Payment, when included as a contract pay item, will be made under:

Pay Item No. 201S: Subgrade Preparation Per Square Yard.

End

SPECIFIC CROSS REFERENCE MATERIALS
Specification Item 201S, "SUBGRADE PREPARATION"

City of Austin Standard Specification Items

Designation	Description
Item No. 101S	Preparing Right of Way
Item No. 102S	Clearing and Grubbing
Item No. 104S	Removing Portland Cement Concrete
Item No. 110S	Street Excavation
Item No. 111S	Excavation
Item No. 130S	Borrow
Item No. 236S	Proof Rolling

Texas Department of Transportation: Manual of Testing Procedures

Designation	Description
Tex-103-E	Determination of Moisture Content of Soil Materials
Tex-104-E	Determination of Liquid Limit of Soils
Tex-105-E	Determination of Plastic limit of Soils
Tex-106-E	Method of Calculating the Plasticity Index of Soils
Tex-114-E	Laboratory Compaction Characteristics & Moisture Density Relationship of Subgrade & Embankment Soil
Tex-115-E	Field Method for Determination of In-Place Density of Soils & Base Materials

RELATED CROSS REFERENCE MATERIALS

City of Austin Standard Specifications

Designation	Description
Item No.132S	Embankment

Texas Department of Transportation: Standard Specifications for Construction and Maintenance of Highways, Streets, and Bridges

Designation	Description
Item No. 100	Preparing Right of Way
Item No. 110	Excavation
Item No. 112	Subgrade Widening
Item No. 132	Embankment
Item No. 150	Blading
Item No. 158	Specialized Excavation Work
Item No. 204	Sprinkling
Item No. 210	Rolling (Flat Wheel)
Item No. 211	Rolling (Tamping)
Item No. 213	Rolling (Pneumatic Tire)

Texas Department of Transportation: Manual of Testing Procedures

Designation	Description
Tex-103-E	Determination of Moisture Content of Soil Materials

Item No. 403S
Concrete for Structures

403S.1 Description

This item shall govern quality, storage, handling, proportioning and mixing of materials for hydraulic cement concrete construction of buildings, bridges, culverts, slabs, prestressed concrete and incidental appurtenances.

This specification is applicable for projects or work involving either inch-pound or SI units. Within the text, the inch-pound units are given preference followed by SI units shown within parentheses.

403S.2 Submittals

The submittal requirements of this specification item may include:

Mix design option(s) of the class of concrete required on the project,

The supplier of the concrete mix design(s) and type of mixing equipment, and

Type of admixtures to be used with the concrete mixes.

403S.3 Materials

Concrete shall be composed of hydraulic cement or hydraulic cement and supplementary cementing materials, water, aggregates (fine and coarse), and admixtures proportioned and mixed as hereinafter provided to achieve specified results.

A. Cementitious Materials

Hydraulic cement shall conform to ASTM C 150, Type I (General Purpose), Type II (General Purpose with Moderate Sulfate Resistance) and Type III (High Early Strength). Type I shall be used when none is specified or indicated on the drawings. Type I and Type III cements shall not be used when a Type II cement is specified or indicated on the drawings. Type III cement may be used in lieu of a Type I cement, when the anticipated air temperature for the succeeding 12 hours will not exceed 60oF (15.6oC). A Type III cement shall only be used in precast concrete or when otherwise specified or allowed. All cement shall be of the same type and from the same source for a monolithic placement.

Unless otherwise specified the cementitious material content shall be limited to no more than 700 lbs. per cubic yard (417 kg per cubic meter). When supplementary cementing materials are used, cement is defined as “cement plus supplementary cementing material.” Supplementary cementing materials include fly ash (DMS 4610), ultra-fine fly ash (DMS-4610), ground granulated blast furnace slag grade 100 or 120 (DMS-4620), silica fume (DMS-4630) and metakaolin (DMS-4635).

Supplementary cementing materials shall not be used when white hydraulic cement is specified.

Class C flyash shall not be used in sulfate-resistant concrete.

Hydraulic cement manufactured in a cement kiln fueled by hazardous waste shall be considered as an approved product if the production facility is authorized to operate under regulation of the Texas Commission on Environmental Quality (TCEQ) and the U. S. Environmental Protection Agency (EPA). Supplier shall provide current TNRCC and EPA authorizations to operate the facility.

When sulfate-resistant concrete is required for a project, mix design options 1, 2, 3 or 4 presented in Section 403S.8, "Mix Design Options" shall be used to develop appropriate mix design utilizing Type I/II, II, V, IP or IS cement.

B. Mixing Water

Water for use in concrete and for curing shall be potable water free of oils, acids, organic matter or other deleterious substances and shall not contain more than 1,000 parts per million of chlorides as Cl or sulfates as SO4.

Water from the City of Austin will not require testing. Contractor may request approval of water from other sources. Contractor shall arrange for samples to be taken from the source and tested at the Contractor's expense. When water from other sources is proposed, test reports shall be provided that indicates compliance with Table 1 before use.

Table 1: Chemical Limits for Mix Water		
Contaminant	Test Method	Maximum Concentration (ppm)
Chloride (CL) Prestressed concrete Bridge decks & superstructure All other concrete	ASTM D-512	 500 500 1,000
Sulfate (SO4)	ASTM D-516	1,000
Alkalies (NA2O + 0.658 K2O)	ASTM D-4191 & D-4192	600
Total Solids	AASHTO T-26	50,000

Water that has an adverse effect on the air-entraining agent or any other chemical admixture or on strength or time of set of the concrete shall not be used. Water used in white Portland cement concrete shall be free from iron and other impurities, which may cause staining, or discoloration.

C. Coarse Aggregate

Coarse aggregate shall consist of durable particles of crushed or uncrushed gravel, crushed blast furnace slag, crushed stone or combinations thereof; free from frozen material or injurious amounts of salt, alkali, vegetable matter or other objectionable material either free or as an adherent coating. When white hydraulic

cement is specified, the coarse aggregates used in the concrete shall be light colored. Quality shall be reasonably uniform throughout.

The coarse aggregate from each source shall not contain more than 0.25 percent by weight of clay lumps, nor more than 1.0 percent by weight of shale nor more than 5 percent by weight of laminated and/or friable particles when tested in accordance with TXDOT Test Method TEX-413-A. The coarse aggregate from each source shall have a wear of not more than 40 percent when tested in accordance with TXDOT Test Method TEX-410-A.

Unless otherwise indicated on the drawings, the coarse aggregate from each source shall be subjected to 5 cycles of the soundness test conforming to TXDOT Test Method TEX-411-A. The loss shall not be greater than 12 percent when sodium sulfate is used or 18 percent when magnesium sulfate is used.

Coarse aggregate shall be washed. The Loss by Decantation (TXDOT Test Method TEX-406-A), plus allowable weight of clay lumps, shall not exceed 1 percent or the value indicated on the drawings or in the project manual, whichever is less. If material finer than the # 200 (75 micrometer) sieve is definitely established to be dust of fracture of aggregates made primarily from crushing of stone, essentially free from clay or shale as established by Part III of TXDOT Test Method TEX-406-A, the percent may be increased to 1.5. When crushed limestone coarse aggregate is used in concrete pavements, the decant may exceed 1% but not more than 3% if the material finer than the # 200 (75 micrometer) sieve is determined to be at least 67% calcium carbonate in accordance with TxDoT Test Method Tex-406-A, Part III.

The coarse aggregate factor may not be more than 0.82; however, when voids in the coarse aggregate exceed 48 percent of the total rodded volume, the coarse aggregate factor shall not exceed 0.85. The coarse aggregate factor may not be less than 0.68 except for a Class I machine extruded mix that shall not have a coarse aggregate factor lower than 0.61.

When exposed aggregate surfaces are required, the coarse aggregate shall consist of particles with at least 40 percent crushed faces. Uncrushed gravel, polished aggregates and clear resilient coatings are not acceptable for exposed aggregate finishes.

When tested by approved methods, the coarse aggregate including combinations of aggregates when used, shall conform to the grading requirements shown in Table 2.

Table 2: Coarse Aggregate Gradation Chart (Percent Passing)

Grade	Nom. Size	2-1/2" (62.5 mm)	2" (50 mm)	1 ½" (37.5 mm)	1" (25 mm)	3/4" (19 mm)	1/2" (12.5 mm)	3/8" (9.5 mm)	No. 4 (4.75 mm)	No. 8 (2.36 mm)
1	2" (50 mm)	100	80-100	50-85		20-40			0-5	
2 (467)*	1 1/2" (37.5 mm)		100	95-100		35-70		10-30	0-5	
3	1" (50 mm)		100	95-100		60-90	25-60		0-5	

4 (57)*	1” (50 mm)			100	95-100		25-60		0-10	0-5
5 (67)*	3/4” (19 mm)				100	90-100		20-55	0-10	0-5
6 (7)*	½" (12.5 mm)					100	90-100	40-70	0-15	0-5
7	3/8" (9.5 mm)						100	70-95	0-25	
8	3/8" (9.5 mm)						100	95-100	20-65	0-10

Notes:

1. Recycled crushed concrete fine aggregate shall be limited to a maximum of 20% of the fine aggregate.

2. The use of recycled crushed hydraulic cement concrete as a coarse aggregate shall be limited to Concrete Classes A, B and D (see Table 5).

D. Fine Aggregate

Fine aggregate shall be washed and consist of clean, hard, durable and uncoated particles of natural or manufactured sand or a combination thereof, with or without a mineral filler. When white hydraulic cement is specified, the fine aggregates used in the concrete shall be light colored. Quality shall be reasonably uniform throughout It shall be free from frozen material or injurious amounts of salt, alkali, vegetable matter or other objectionable material and it shall not contain more than 0.5 percent by weight of clay lumps in accordance with TEX-413-A. When subjected to color test for organic impurities per TXDOT Test Method TEX-408-A, it shall not show a color darker than standard.

Unless indicated otherwise on the drawings the acid insoluble residue of fine aggregate used in slab concrete subject to direct traffic shall not be less than 60 percent by weight (mass) when tested conforming to TXDOT Test Method TEX-612-J.

Unless indicated otherwise on the Drawings, fine aggregate shall be blended, when necessary, to meet the acid insoluble residue requirement.

When blending the following equation shall be used:

Acid Insoluble (%) = {(A1)(P1)+(A2)(P2)}/100

Where:

A1 = acid insoluble (%) of aggregate 1,

A2 = acid insoluble (%) of aggregate 2,

P1 = % by weight of A1 of the fine aggregate blend, and

P2 = % by weight of A2 of the fine aggregate blend.

When tested in accordance with TxDoT Test Method Tex-401-A, the fine aggregate, including mineral filler and combinations of aggregates, when used, shall conform to the grading requirements shown in Table 3.

Table 3: Fine Aggregate Gradation Chart1 (Grade 1 - Percent Passing)

3/8 (9.5 mm)	No. 4 (4.75 mm)	No. 8 (2.36 mm)	No. 16 (1.18 mm)	No. 30 (600 µm)	No. 50 (300 µm)	No. 100 (150 µm)	No. 200 (75 µm)
100	95-100	80-100	50-85	25-65	10-351	0-10	0-32

Notes:

1. Recycled crushed concrete fine aggregate shall be limited to a maximum of 20% of the fine aggregate.

2. The use of recycled crushed hydraulic cement concrete as a fine aggregate shall be limited to Concrete Classes A, B and D (see Table 5).

3. 6 to 35 when sand equivalent value is greater than 85.

4. 0 to 6 for manufactured sand.

   Sand equivalent per TXDOT Test Method TEX-203-F shall not be less than 80 nor less than otherwise indicated on the drawings, whichever is greater.

   The fineness modulus will be determined by adding the percentages by weight retained on sieve Nos. 4, 8, 16, 30, 50 and 100 (4.75 mm, 2.36 mm, 1.18mm, 600 µm, 300 µm, and 150 µm) and dividing the sum of the six sieves by 100. For all classes of concrete except K (see Table 5), the fineness modulus shall be between 2.30 and 3.10. For Class K concrete, the fineness modulus shall be between 2.40 and 2.90, unless indicated otherwise on the Drawings.

E. Mineral Filler

Mineral filler shall consist of stone dust, clean crushed sand or other approved inert material. When tested in accordance with TxDoT Test Method Tex-401-A, it shall conform to the following gradation:

Passing the No. 30 (600 µm) Sieve 100 percent

Passing the No. 200 (75 µm) Sieve 65 to 100 percent

F. Mortar and Grout

Unless otherwise specified, indicated on the drawings or approved by the Engineer or designated representative mortar and grout shall consist of 1 part hydraulic cement, 2 parts finely graded sand and enough water to make the mixture plastic. When required to prevent color difference, white cement shall be added to produce color required. When required by the Engineer or designated representative, approved latex adhesive may be added to the mortar. Mortar shall be provided with a consistency such that the mortar can be easily handled and spread by trowel.

Grout shall be provided of a consistency that will flow into and completely fill all voids.

G. Admixtures

All chemical admixtures including water reducing, placticizers and air entrainment shall conform to TxDoT DMS-4640, “Chemical Admixtures for Concrete”. Calcium chloride-based admixtures shall not be approved. Admixtures shall be included in the prequalified concrete admixtures list maintained by TxDot’s Construction Division. High-range water-reducing admixtures (TxDoT Type F or G) and accelerating admixtures (TxDoT Type C or E) shall not be used in bridge deck concrete.

H. Air Entrainment

Unless indicated otherwise on the drawings, all concrete classes with the exception of Class B shall be air;entained in accordance with Table 8. If the air content is more than 1-1/2 percentage points below or 3 percentage points above the required air, the load of concrete will be rejected. If the air content is more than 1-1/2 but less than 3 percentage points above the required air, the concrete may be accepted based on strength test results.

403S.4 Storage of Materials

A. Cement, Supplementary Cementing Materials and Mineral Filler

All cement, supplementary cementing materials and mineral filler shall be stored in separate and well ventilated, weatherproof buildings or approved bins, which will protect the material from dampness or absorption of moisture. Storage facilities shall be easily accessible and each shipment of packaged cement shall be kept separated to provide for identification and inspection. The Engineer or designated representative may permit small quantities of sacked cement to be stored in the open for a maximum of 48 hours on a raised platform and under waterproof covering.

B. Aggregates

The method of handling and storing concrete aggregates shall prevent contamination with foreign materials. If the aggregates are stored on the ground, the sites for the stockpiles shall be clear of all vegetation and shall be level. Aggregates shall be stockpiled in sizes to facilitate blending. If the aggregate is not stockpiled on a hard, non-contaminant base, the bottom 6-inch (150 mm) layer of the stockpile shall not be used without recleaning the aggregate.

When conditions require the use of 2 or more grades of coarse aggregates, separate stockpiles shall be maintained to prevent intermixing. Where space is limited, stockpiles shall be separated by walls or other appropriate barriers.

Aggregate shall be stockpiled and protected from the weather a minimum of 24 hours prior to use to minimize free moisture content. When stockpiles are too large to protect from the weather, accurate and continuous means acceptable to the Engineer or designated representative shall be provided to monitor aggregate

temperature and moisture. Aggregates shall be stockpiled and handled such that segregation and contamination are minimized.

The stockpiles shall be sprinkled to control moisture and temperature as necessary. A reasonably uniform moisture content shall be maintained in aggregate stockpiles.

C. Admixtures

Admixtures shall be stored in accordance with manufacturer's recommendations and shall be protected against freezing.

D. Hot Weather Concrete Mixes

Ice may be used during hot weather concrete placement (Section 13 of Standard Specification Item No. 410S, "Concrete Structures") to lower the concrete temperature; however, the Contractor shall furnish a mix design acceptable to the Engineer or designated representative for class of concrete specified. The addition of ice shall not exceed 50% of the total mix water weight.

403S.5 Measurement of Materials

Water shall be accurately metered. Fine and coarse aggregates, mineral filler, bulk cement and fly ash shall be weighed separately. Allowances shall be made in the water volume and aggregate weights during batching for moisture content of aggregates and admixtures. Volumetric and weight measuring devices shall be acceptable to the Engineer or designated representative. Measurement of materials in non-volumetric and volumetric mixers shall conform to Section 421.4.D of TxDot Specification Item 421, "Hydraulic Cement Concrete".

Batch weighing of sacked cement is not required; however, bags, individually and entire shipments, may not vary by more than 3 percent from the specified weight of 94 pounds (42.6 kilograms) per bag. The average bag weight of a shipment shall be determined by weighing 50 bags taken at random.

403S.6 Mix Design

The Contractor shall furnish a mix design acceptable to the Engineer or designated representative for the class of concrete required in accordance with Table 5. The mix shall be designed by a qualified commercial laboratory and signed/sealed by a registered Professional Engineer, licensed in the state of Texas to conform with requirements contained herein, to ACI 211.1 or TXDOT Bulletin C-11 (and supplements thereto). The maximum water-to-cementitious material ratio identified in Table 5 for specific classes of concrete shall not be exceeded.

A higher-strength class of concrete with equal or lower water-to-cementituous-material ratio may be substituted for the specified class of concrete.

The mix design shall be over-designed in accordance with Table 5 in order to account for production variability and to ensure minimum compressive strength requirements are met.

Allowable mix design options are presented in Section 403S.8.

The Contractor shall perform, at the Contractor's expense, the work required to substantiate the design, including testing of strength specimens. Complete concrete design data shall be submitted to the Engineer or designated representative for approval. The mix design will be valid for a period of one (1) year provided that there are no changes to the component materials.

When there are changes in aggregates or in type, brand or source of cement, supplementary cementing material or chemical admixtures, the mix shall be evaluated as n new mix design. A change in vendor does not necessarily constitute a change in materials or source. When only the brand or source of cement is changed and there is a prior record of satisfactory performance of the cement with the ingredients, the submittal of new trial batches may be waived by the Engineer or designated representative.

At the end of one (1) year, a previously approved mix may be resubmitted for approval if it can be shown that no substantial change in the component materials has occurred and that test results confirming the adequacy of the mix designs have been acquired during the previous year. The resubmittal analysis must be reviewed, signed and sealed by a registered Professional Engineer, licensed in the state of Texas. This resubmittal shall include a reanalysis of specific gravity, absorption, fineness modulus, sand equivalent, soundness, wear and unit weights of the aggregates. Provided that the fineness modulus did not deviate by more than 0.20 or that the re-proportioned total mixing water, aggregate and cement (or cement plus fly ash) are within 1, 2, and 3 percent, respectively, of pre-approved quantities, a one-year extension on the approval of the mix may be granted by the Engineer or designated representative. Updated cement, fly ash, and admixture certifications shall accompany the resubmittal.

Approved admixtures that are included in the prequalified concrete admixtures list maintained by TxDot's Construction Division may be used with all classes of concrete at the option of the Contractor provided that specific requirements of the governing concrete structure specification are met. Water reducing and retarding agents shall be required for hot weather, large mass, and continuous slab placements. Air entraining agents may be used in all mixes but must be used in the classes indicated on Table 5. Unless approved by the Engineer or designated representative, mix designs shall not exceed air contents for extreme exposure conditions as recommended by ACI 211.1 for the various aggregate grades.

403S.7 Consistency and Quality of Concrete

Concrete shall be workable, cohesive, possess satisfactory finishing qualities and of stiffest consistency that can be placed and vibrated into a homogeneous mass within slump requirements specified in Table 4 without the development of segregation or honeycombing. No concrete will be permitted with a slump in excess of the maximums

shown unless water-reducing admixtures have been previously approved. Concrete that exceeds the maximum acceptable placement slump at time of delivery will be rejected. Slump values shall be conducted in accordance with TXDOT Test Method TEX-415-A.

Consistency and quality of concrete should allow efficient placement and completion of finishing operations before initial set. Re-tempering (i.e. addition of water and reworking concrete after initial set) shall not be allowed. When field conditions are such that additional moisture is needed for final concrete surface finishing operation, the required water shall be applied to surface by fog spray only and shall be held to a minimum. Excessive bleeding shall be avoided and in no case will it be permissible to expedite finishing and drying by sprinkling the surface with cement powder.

Table 4: Slump Requirements

	Slump1, inches (mm)	
Type of Construction	Maximum	Minimum
Cased Drilled Shafts	4 (100)	3 (75)
Reinforced Foundation Caissons and Footings	3 (75)	1 (25)
Reinforced Footings and Substructure Walls	3 (75)	1 (25)
Uncased Drilled Shafts	6 (150)	5 (125)
Thin-walled Sections; 9 inches (225 mm) or less	6 ½ (165)	4 (100)
Prestressed Concrete Members1	6 ½ (165)	4 (100)
Precast Drainage Structures	6 (150)	4 (100)
Wall Sections over 9 inches (225 mm)	5 (125)	3 (75)
Reinforced Building Slabs, Beams, Columns and Walls	4 (100)	1 (25)
Bridge Decks	4 (100)	2 (50)
Pavements, Fixed-form	6 ½ (165)	4 (100)
Pavements, Slip-form	3 (75)	1-½ (37.5)
Sidewalks, Driveways and Slabs on Ground	4 (100)	2 (50)
Curb & Gutter, Hand-vibrated	3 (75)	1 (25)
Curb & Gutter, Hand-tamped or spaded	4 (100)	2 (50)
Curb & Gutter, Slip-form/extrusion machine	2 (50)	½ (12.5)
Heavy Mass Construction	2 (50)	1 (25)
High Strength Concrete	4 (100)	3 (75)
Riprap and Other Miscellaneous Concrete	6 (150)	1 (25)
Under Water or Seal Concrete	8 ½ (213)	6 (150)

1. Slump values when a high range water reducer (HRWR) is not used.

2. When a high range water reducer (HRWR) is used, maximum acceptable placement slump will be 9 in (225 mm)

During progress of the work, the Engineer or designated representative shall cast test cylinders as a check on compressive strength of concrete actually placed. The Engineer or designated representative may also perform slump tests, entrained air tests and temperature checks to ensure compliance with specifications.

Proportioning of all material components shall be checked prior to discharging. Excluding mortar material for pre-coating of the mixer drum [see section 403S.8.B and adjustment for moisture content of admixtures and aggregates, material components shall fall within the range of + 1% for water, + 2% for aggregates, + 3% for cement, +2% for fly ash and within manufacturer recommended dosage rates for admixtures except that air entrainment shall be within + 1-1/2 percentage points of the mix design requirements.

Unless otherwise specified or indicated on the drawings, concrete mix temperature shall not exceed 90°F (32oC) except in mixes with high range water reducers where a maximum mix temperature of 100°F (38oC) will be allowed. Cooling an otherwise acceptable mix by addition of water or ice during agitation will not be allowed.

Test cylinders will be required for small placements such as manholes, inlets, culverts, wing walls, etc. The Engineer or designated representative may vary the number of tests to a minimum of 1 for each 25 cubic yards (1 for each 19 cubic meters) placed over a several day period.

Test cylinders shall be required for each monolithic placement of bridge decks or superstructures, top slabs of direct traffic culverts, cased drilled shafts, structural beams and as otherwise directed by Engineer or designated representative for design strength confirmation or early form removal. Test cylinders made for early form removal or for consideration of use of structure will be at Contractor's expense, except when required by Engineer or designated representative.

A strength test shall be defined as the average breaking strength of 2 cylinders. A minimum of four test cylinders shall be prepared; two each to be tested at 7 and 28 days. Specimens will be tested conforming to TXDOT Test Method TEX-418-A. If required strength or consistency of class of concrete being produced cannot be secured with minimum cementitious material specified or without exceeding maximum water/cementitious material ratio, Contractor will be required to furnish different aggregates, use a water reducing agent, an air entraining agent or increase the cement content in order to provide concrete meeting these specifications.

Slump tests will be performed in accordance with TxDoT Test Method Tex-415-A. Entrained air tests will be performed in accordance with TxDoT Test Method Tex-416-A.

Test specimens shall be cured using the same methods and under the same conditions as the concrete represented. Design strength cylinders shall be cured conforming to TXDOT Bulletin C-11 (and supplements thereto).

When control of concrete quality is by 28-day compressive tests, job control testing will be by 7-day compressive strength tests. The minimum strength requirement for seven (7) day test will be 70 percent of the specified minimum 28-day compressive strength. If the required 7-day strength is not secured with the quantity of cement specified in Table 4, changes in the mix design shall be made and resubmitted for approval. For an occasional failure of the seven-day compressive test, the concrete may be tested at 28 days for final evaluation.

Table 5: Classes of Concrete

Class	Cement Sks Per CY	Minimum Strength, psi (MPa)		Maximum W/C Ratio1	Coarse Aggr. Grade 2,3,4	Air Entrain.
		28 Days	7 Days			
A	5.0 (280 kg/m3)	3000 (20.6)	2100 (14.5)	0.6	1,2,3,4, 8	Yes
B	4.0 (225 kg/m^3)	2000 (13.8)	1400 (9.7)	0.6	2,3,4,5,6,7	No
C5	6.0 (335 kg/m^3)	3600(24.8)	2520 (17.4)	0.45	1,2,3,4,5,6	Yes
D	4.5 (252 kg/m^3)	2500 (17.2)	1750 (12.1)	0.6	2,3,4,5,6,7	No
H5	6.0 (335 kg/m^3)	As indicated	As Indicated	0.45	3,4,5,6	Yes
I	5.5 (308 kg/m^3)	3500 (24.1)	2450 (16.9)	0.45	2,3,4,5	Yes
J	2.0 (112 kg/m^3)	800 (5.5)	560 (3.9)	N/A	2,3,4,5	No
S5	6.0 (335 kg/m^3)	4000 (27.6)	2800 (19.3)	0.45	2,3,4,5	Yes

Notes:

1. Maximum water-cement or water-cementitious ratio by weight

2 Unless otherwise allowed, Grade 1 coarse aggregate shall only be used in massive foundations with 4-in (100-mm) minimum clear spacing between reinforcing steel bars.

3. Grade 1 coarse aggregate grading shall not be used in drilled shafts.

4. Unless otherwise allowed, Grade 8 coarse aggregate shall be used in extruded curbs.

5. Structural concrete classes.

6. When Type II cement is used in Class C, S or A concrete, the 7-day compressive strength requirement will be 2310 psi (15.9 MPa) for Class C, 2570 psi (17.7 MPa) for Class S and 1925 psi (13.3 MPa) for Class A minimum.

Table 6: Over Design Required to Meet Compressive Strength Requirements$_1$

Number Of Tests $_{2,3}$	Standard Deviation, psi (MPa)				
	300 (2.06)	400 (2.75)	500 (3.44)	600 (4.13)	700 (4.82)
15	470 (3.24)	620 (4.27)	850 (5.85)	1,120	1,390

				(7.71)	(9.57)
20	430 (2.96)	580 (3.99)	760 (5.23)	1,010 (6.95)	1,260 (8.67)
30 or more	400 (2.75)	530 (3.65)	670 (4.61)	900 (6.20)	1,130 (7.78)

Notes:

1. When designing the mix, add the tabulated amounts to the minimum design strength in Table 5.Maximum water-cement or water-cementitious ratio by weight

2. Number of tests of a concrete mixture used to estimate the standard deviation of a concrete production facility. Test of another mix within 1,000 psi (6.88 MPa) of the specified strength may be used.

3. If less than 15 prior tests are available, the overdesign should be 1,000 psi (6.88 MPa) for specified strength less than 3,000 psi (20.65 MPa), 1,200 psi (8.26 MPa) for specified strengths from 3,000 to 5,000 psi (20.65 to 34.42 MPa) and 1,400 psi (9.64 MPa) for specified strengths greater than 5,000 psi (34.42 MPa).

Table 7: Expected Usage of Concrete Classes

Class	General Usage
A	Inlets, manholes, curb, gutter, curb & gutter, concrete retards, sidewalks, driveways, backup walls and anchors
B	Riprap, small roadside signs and anchors
C5	Drilled shafts, bridge substructure, bridge railing, culverts except top slab of direct traffic culverts, headwalls, wing walls, approach slabs, and cast-in-place concrete traffic barrier
D	Riprap
H5	Prestressed concrete beams, boxes, piling and precast concrete traffic barrier
J	Utility trench repair
S5	Bridge slabs and top slabs of direct traffic culverts

Table 8: Air Entrainment[1]

Nominal Maximum Aggregate Size In (mm)	% Air Entrainment	
	Moderate Exposure	Severe Exposure
3/8 (9.5)- Grades 7 & 8	6	7-1/2
1/2 (12.5)- Grades 6	5-1/2	7
3/4 (19)- Grades 5	5	6
1 (25)- Grades 4	4-1/2	6
1-1/2 (37.5)- Grades 2 & 3	4-1/2	5-1/2
2 (50)- Grades 2	4	5

1. For specified concrete strengths above 5,000 psi (34.42 MPa) a reduction of 1 percentage point is allowed.

403S.8 Mix Design Options

For the structural concretes identified in Table 5 (Classes C, H and S) and any other class of concrete designed using more than 520 lbs. of cementitious material per cubic yard (310 kgs per cubic meter), one of the mix design options presented below shall be used.

For the non-structural concretes identified in Table 5 (Classes A, B, D and I) and any other class of concrete designed using less than 520 lbs. of cementitious material per cubic yard (310 kgs per cubic meter), one of the mix design options presented below will be used, except that Class C fly ash may be used instead of Class F fly ash for Options 1, 3 and 4 unless a sulfate-resistant concrete is required.

A. Option 1: Twenty (20) to thirty-five (35) percent of the cement may be replaced with Class F fly ash.

B. Option 2: Thirty-five (35) to fifty (50) percent of the cement may be replaced with ground granulated blast-furnace slag.

C. Option 3: Thirty-five (35) to fifty (50) percent of the cement may be replaced with a combination of Class F fly ash, ground granulated blast-furnace slag or silica fume. The combination may not include more than thirty-five (35) percent fly ash and no more than ten (10) percent silica fume.

D. Option 4: Type IP or Type IS will be used and up to ten (10) percent of the cement may be replaced with Class F fly ash, ground granulated blast-furnace slag or silica fume.

E. Option 5: Thirty-five (35) to fifty (50) percent of the cement may be replaced with a combination of Class C fly ash and at least six (6) percent of silica fume, ultra fine fly ash or metakaolin. The combination may not include more than thirty-five (35) percent fly ash and no more than ten (10) percent silica fume.

F. Option 6: A lithium nitrate admixture will be added at a minimum dosage of 0.55 gal. Of thirty (30) percent lithium nitrate solution per pound of alkalis present in the hydraulic cement.

G. Option 7: When hydraulic cement only is used in the design, the total alkali contribution from the cement in the concrete does not exceed 4.0 lbs. Per cubic yard, when calculated as follows:

alkali (lbs. per CY) = .01 (lbs cement/CY) (% Na_2O equivalent in cement)

where (% Na_2O equivalent in cement) is assumed to be the maximum cement alkali content reported on the cement mill certificate.

H. Option 8: When there are deviations from Options 1 through 7, the following shall be performed:

1. Conduct tests on both coarse and fine aggregate separately in accordance with ASTM C-1260, using 440 g of the proposed cementitious in the same proportions of hydraulic cement to supplementary cementing material to be used in the mix.

2. Prior to use of the mix, a certified test report signed and sealed by a Professional Engineer, licensed in the state of Texas shall be submitted that demonstrates that ASTM C 1260 test results for each aggregate do not exceed 0.10 percent expansion.

403S.9 Mixing and Mixing Equipment

All equipment, tools and machinery used for hauling materials and performing any part of the work shall be maintained in such condition to insure completion of the work without excessive delays for repairs and replacement. Mixing shall be done in a mixer of approved type and size that will produce uniform distribution of material throughout the mass and shall be capable of producing concrete meeting requirements of ASTM C 94, Ready-mixed Concrete and these specifications. Mixing equipment shall be capable of producing sufficient concrete to provide required quantities. Entire contents of the drum shall be discharged before any materials are placed therein for a succeeding batch. Improperly mixed concrete shall not be placed in a structure. For all mixers an adequate water supply and an accurate method of measuring the water shall be provided.

The mixer may be batched by either volumetric or weight sensing equipment and shall be equipped with a suitable timing device that will lock the discharging mechanism and signal when specified time of mixing has elapsed.

A. Proportioning and Mixing Equipment

For all miscellaneous concrete placements, a mobile, continuous, volumetric mixer or a volumetric or weight batch mixer of the rotating paddle type may be used.

When approved by Engineer or designated representative in writing or when specified for use in other items, these mixers may be used for other types of concrete construction, including structural concrete, if the number of mixers furnished will supply the amount of concrete required for the particular operation in question.

These mixers shall be designed to receive all the concrete ingredients, including admixtures, required by the mix design in a continuous uniform rate and mix them to the required consistency before discharging.

For continuous volumetric mixers, the materials delivered during a revolution of the driving mechanism or in a selected interval, will be considered a batch and the proportion of each ingredient will be calculated in the same manner as for a batch type plant.

Mixing time shall conform to recommendations of manufacturer of mixer unless otherwise directed by Engineer or designated representative.

B. Ready-mixed Concrete

Use of ready-mixed concrete will be permitted provided the batching plant and mixer trucks meet quality requirements specified herein. When ready-mixed concrete is used, additional mortar (1 sack cement, 3 parts sand and sufficient water) shall be added to each batch to coat the mixer drum. Ready-mixed concrete, batching plant and mixer truck operation shall include the following:

1. A ticket system will be used that includes a copy for the Inspector. Ticket will have machine stamped time/date of concrete batch, a mix design designation, weight of cement, fly ash, sand and aggregates; exact nomenclature and written quantities of admixtures and water. Any item missing or incomplete on ticket may be cause for rejection of concrete.

2. Sufficient trucks will be available to support continuous placements. The Contractor will satisfy the Engineer or designated representative that adequate standby trucks are available to support monolithic concrete placement requirements.

3. A portion of mixing water required by the mix design to produce the specified slump may be withheld and added at the job site, but only with permission of the Engineer or designated representative and under the Inspector's observation. When water is added under these conditions, the concrete batch will be thoroughly mixed before any slump or strength samples are taken. Additional cement shall not be added at the job site to otherwise unacceptable mixes.

4. A metal plate(s) shall be attached in a prominent place on each truck mixer plainly showing the various uses for which it was designed. The data shall include the drum's speed of rotation for mixing and for agitating and the capacity for complete mixing and/or agitating only. A copy of the manufacturer's design, showing dimensions of blades, shall be available for inspection at the plant at all times. Accumulations of hardened concrete shall be removed to the satisfaction of the Engineer or designated representative.

5. The loading of the transit mixers shall not exceed capacity as shown on the manufacturer's plate attached to the mixer or 63 percent of the drum volume, whichever is the lesser volume. The loading of transit mixers to the extent of causing spill-out enroute to delivery will not be acceptable. Consistent spillage will be cause for disqualification of a supplier.

6. Excess concrete remaining in the drum after delivery and wash water after delivery shall not be dumped on the project site unless approval of the dump location is first secured from the Engineer or designated representative.

C. Volumetric Batching

Use of volumetric batched concrete will be permitted provided the batching and continuous mixing operations conform to ASTM C 685, “Concrete Made By Volumetric Batching and Continuous Mixing”. This type concrete shall be made from materials continuously batched by volume, mixed in a continuous mixer and delivered to the site in a freshly mixed and unhardened state. Tests and criteria for batching accuracy and mixing efficiency shall be as specified in ASTM C 685.

A ticket system will be used that includes a copy for the Inspector. The ticket will have machine stamped time/date of concrete batch, a mix design designation, weight of cement, fly ash, sand and aggregates; exact nomenclature and written quantities of admixtures and water. Any item missing or incomplete on ticket may be cause for rejection of concrete.

Each batching or mixing unit, or both, shall carry in a prominent place a metal plate or plates on which are plainly marked the gross volume of the unit in terms of mixed concrete, discharge speed and the weight-calibrated constant of the machine in terms of a revolution counter or other output indicator. The mixer shall produce a thoroughly mixed and uniform concrete.

The batcher-mixer unit shall contain in separate compartments all the necessary ingredients needed for the manufacture of concrete. The unit shall be equipped with calibrated proportioning devices to vary the mix proportions and it shall produce concrete as required by the Work and ASTM C 685.

D. Truck-mixed Concrete

The concrete shall be mixed in a truck mixer from 70 to 100 revolutions at the mixing speed designated by the manufacturer that will produce a uniform concrete mix. The concrete shall be delivered to the project in a thoroughly mixed and uniform mass and shall be discharged with a satisfactory degree of uniformity. Additional mixing at the job site, at the mixing speed designated by the manufacturer, may be allowed by the Engineer or designated representative as long as the concrete is discharged before the drum has revolved a total of 300 revolutions after the introduction of the mixing water to the cement and the aggregates.

Re-tempering or adding concrete chemical admixtures is only permitted at the job site when concrete is delivered in a truck mixer. Water shall not be added after introduction of mixing water at the batch plant except on arrival at the job site with approval of the Engineer or designated representative, in order to adjust the slump of the concrete. When this water is added, the mix design water-cementitious-material ratio shall not be exceeded. The drum or blades shall be turned at least 30 additional revolutions at mixing speed to ensure thorough and uniform mixing of the concrete. Water or chemical admixtures shall not be added to the batch after any concrete has been discharged.

When the concrete contains silica fume, mixing times and batching operations shall be adjusted as necessary to ensure that the material is completely and uniformly dispersed in the mix. The dispersion of the silica fume within the mix shall be verified in trial batches.

E. Hand-mixed Concrete

Hand mixing of concrete may be permitted for small placements or in case of an emergency and then only on authorization of the Engineer or designated representative. Hand-mixed batches shall not exceed a 4 cubic foot (0.113 cubic meters) batch in volume. Material volume ratios shall not be leaner than 1 part cement, 2 parts large aggregate, 1 part fine aggregate and enough water to produce a consistent mix with a slump not to exceed 4 inches (100 mm). Admixtures shall not be used unless specifically approved by the Engineer or designated representative.

403S.10 Excavation, Placing of Concrete, Finishing, Curing and Backfill

Excavation, placing of concrete, finishing, curing and backfill shall conform to Standard Specification Item No. 401S, "Structural Excavation and Backfill", Standard Specification Item No. 410S, "Concrete Structures" and Standard Specification Item No. 411S, "Surface Finishes for Concrete".

403S.11 Measurement

Where measurement of concrete for a structure is not provided by another governing pay item, measurement shall be made under this specification in accordance with the following.

The quantities of concrete of the various classifications which constitute the completed and accepted structure or structures in place will be measured by the cubic yard (cubic meters:1 cubic meter is equal to 1.308 cubic yards), each, square yard (square meter: 1 square yard equals 0.836 square meters) or linear foot as indicated in the Contract Documents. Measurement will be as follows:

A. General

1. Measurement based on dimensions shall be for the completed structure as measured in place. However, field-measured dimensions shall not exceed those indicated on the drawings or as may have been directed by the Engineer or designated representative in writing.

2. No deductions shall be made for chamfers less than 2 inches (50 mm) in depth, embedded portions of structural steel, reinforcing steel, nuts, bolts, conduits less than 5 inches (125 mm) in diameter, pre/post tensioning tendons, keys, water stops, weep holes and expansion joints 2 inches (50 mm) or less in width.

3. No measurement shall be made for concrete keys between adjoining beams or prestressed concrete planks.

4. No measurement shall be made for fill concrete between the ends or adjoining prestressed concrete planks/box beams at bent caps or between the ends of prestressed concrete planks/box beams and abutment end walls.

5. No measurement shall be made for inlet and junction box invert concrete.

6. No measurement shall be made for any additional concrete required above the normal slab thickness for camber or crown.

B. Plan Quantity. For those items measured for plan quantity payment, adequate calculations have been made. If no adjustment is required by Article 403S.12, additional measurements or calculations will not be required or made.

C. Measured in Place. For those items not measured for Plan Quantity payment, measurement will be made in place, subject to the requirements of Article 403S.10.A.1 above.

403S.12 Payment

The work performed and materials furnished as prescribed by this item and measured in accordance with the applicable provisions of "Measurement" above will be paid for as follows.

The quantity to be paid for will be that quantity indicated in the contract documents and/or shown on the drawings, regardless of errors in calculations, except as may be modified by the following.

Plan Quantities will be adjusted:

A. When a complete structure element has been erroneously included or omitted from the drawings, the quantity shown on the drawings for that element will be added to or deducted from the plan quantity and included for payment. A complete structure element will be the smallest portion of a total structure for which a quantity is included on the drawings. Quantities revised in this manner will not be subject to the provisions of the "General Conditions", Article 11.

B. When the plan quantity for a complete structure element is in error by 5 percent or more, a recalculation will be made and the corrected quantity included for payment. Quantities revised in this manner will not be subject to the provisions of the "General Conditions", Article 11

C. When quantities are revised by a change in design, the "plan quantity" will be increased or decreased by the amount involved in the design change. Quantities revised in this manner will be subject to the provisions of the "General Conditions", Article 11.

The party to the contract requesting the adjustment shall present to the other, a copy of the description and location, together with calculations of the quantity for the structure element involved. When this quantity is certified correct by the Engineer or designated representative, it will become the revised plan quantity.

Payment for increased or decreased costs due to a change in design on those items measured as "Cubic Yard", "Each", "Square Foot", "Square Yard" or "Linear

Foot" will be determined by Change Order. Quantities revised in this manner will be subject to the provisions of the "General Conditions", Article 11.

The unit prices bid for the various classes of concrete shown shall include full compensation for furnishing, hauling, and mixing all concrete material; placing, finishing and curing all concrete; all grouting, pointing and finishing; furnishing and placing drains; furnishing and placing metal flashing strips; furnishing and placing expansion joint material required by this item; and for all forms and false work, labor, tools, equipment and incidentals necessary to complete the work.

Pay Item No. 403S-CY:	(Structure or Structural Component) -	Per Cubic Yard.
Pay Item No. 403S-EA:	(Structure or Structural Component) -	Per Each.
Pay Item No. 403S-SY:	(Structure or Structural Component) -	Per Square Yard.
Pay Item No. 403S-LF:	(Structure or Structural Component) -	Per Lineal Foot.

End

SPECIFIC CROSS REFERENCE MATERIALS
Standard Specification Item 403S, "Concrete For Structures"

City of Austin Standard Specification Items

Designation	Description
Item No. 401S	Structural Excavation and Backfill
Item No. 410S	Concrete Structures
Item No. 411S	Surface Finishes for Concrete

Texas Department of Transportation: Departmental Material Specifications

Designation	Description
DMS-4640	Chemical Admixtures for Concrete
DMS-4610	Fly Ash
DMS-4620	Ground Granulated Blast-Furnace Slag
DMS-4630	Silica Fume
DMS-4635	Metakaolin

American Association of State Highway & Transportation Officials,
AASHTO Standard Method of Test for

Designation	Description
Method T 26	Quality of Water to be Used in Concrete

American Concrete Institute, ACI

Designation	Description
ACI 211.1	Standard Practice for Selecting Proportions for Normal, Heavyweight, and Mass Concrete

American Society for Testing and Materials, ASTM

Designation	Description
ASTM C 94	Specification For Ready-Mixed Concrete
ASTM C 150	Specification For Portland Cement
ASTM C 685	Concrete Made By Volumetric Batching and Continuous Mixing
ASTM C-1260	Standard Test Method for Potential Alkali Reactivity of Aggregates
ASTM D-512	Test Methods for Chloride Ion in Water
ASTM D-516	Test Methods for Sulfate Ion in Water
ASTM D-4191	Test Method for Sodium in Water by Atomic Absorption
ASTM D-4192	Test Method for Potassium Water by Atomic Absorption

Texas Department of Transportation: Manual of Testing Procedures

Designation	Description
TEX-203-F	Sand Equivalent Test
TEX-401-A	Sieve Analysis of Fine and Coarse Aggregate
TEX-406-A	Mineral Finer than 75 µm (No. 200) Sieve in Mineral Aggregates (Decantation Test for Concrete Aggregates)
TEX-408-A	Organic Impurities in Fine Aggregate for Concrete
TEX-410-A	Abrasion of Coarse Aggregate Using The Los Angeles Machine

TEX-411-A	Soundness of Aggregate by Use of Sodium Sulfate or Magnesium Sulfate
TEX-413-A	Determination of Deleterious Materials in Mineral Aggregate
TEX-415-A	Slump of Portland Cement Concrete
TEX-416-A	Air Content of Freshly-Mixed Concrete by the Pressure Method
TEX-418-A	Compressive Strength of Cylindrical Concrete Specimens
TEX-612-J	Acid Insoluble Residue

SPECIFIC CROSS REFERENCE MATERIALS (Continued)
Standard Specification Item 403S, "Concrete For Structures"

Texas Department of Transportation: Publications

Designation	Description
Bulletin C-11	Construction Bulletin

RELATED CROSS REFERENCE MATERIALS
Standard Specification Item 403S, "Concrete For Structures"

Texas Department of Transportation: Standard Specifications for Construction and Maintenance of Highways, Streets, and Bridges

Designation	Description
Item 360	Concrete Pavement
Item 420	Concrete Structures
Item 421	Hydraulic Cement Concrete
Item 427	Surface Finishes for Concrete
Item 431	Pneumatically Placed Concrete

Item 520 Weighing and Measuring Equipment

Texas Department of Transportation: Departmental Material Specifications

Designation	Description
DMS-4650	Hydraulic Cement Concrete Curing Materials and Evaporation Retardants”
DMS-6100	Epoxy and Adhesives
DMS 8900	Fly Ash

Item No. 406S
Reinforcing Steel

406S.1 Description

This item shall govern furnishing and placement of reinforcing steel, deformed and smooth, of the size and quantity indicated on the drawings and in accordance with these specifications.

This specification is applicable for projects or work involving either inch-pound or SI units. Within the text and accompanying tables, the inch-pound units are given preference followed by SI units shown within parentheses.

406S.2 Submittals

The submittal requirements of this specification item may include:

A. Evidence that the steel reinforcement producer is included on the TxDoT list of approved producing mills

B. Listing of the size, grade, type and quantity of reinforcing steel proposed for the project.

C. If welding of reinforcing steel is proposed, evidence that carbon equivalent (C.E.) of the proposed steel is at least 0.55% with a report of chemical analysis showing the percentages of elements necessary to establish C.E.

D. If epoxy coated steel is proposed, evidence that the steel reinforcement producer is included on the TxDoT list of approved epoxy coating applicators

E. If epoxy coated steel is proposed, written certification that the epoxy-coated reinforcing steel meets the requirements of this Item with a copy of the manufacturer's control tests.

F. When mechanical splices are proposed, the types of couplers proposed for use.

406S.3 Materials

A. Approved Mills

Prior to furnishing reinforcing steel, the producing mills must be included on the list of approved producing mills that is maintained by the Construction Division of the State of Texas Department of Transportation

B. Deformed Bars and Wire Reinforcement

Unless indicated otherwise on the drawings, Bar reinforcement shall be Grade 60 and deformed. Reinforcing steel must conform to one of the following:

ASTM A615/ 615M, Grades 40 or 60 (300 or 420)

ASTM A996/ 996M, Type A, Grades 40 or 60 (300 or 420)

ASTM A996/996M, Type R, Grade 60 (420), permitted in concrete pavement only (furnished as straight bars only without bends. Bend tests are not required)

ASTM A706/706M

In cases where the provisions of this item are in conflict with the provisions of the ASTM Designation to which reference is made, the provisions of this item shall govern.

The nominal size, area and weight (mass) of reinforcing steel bars covered by these specifications are as follows:

Bar Size Number 1/8th ins (mm)	Nominal Diameter, inches (mm)	Nominal Area, Sq. ins. (mm2)	Weight/Linear Foot Lbs. (kg)
2 (6)	0.250 (6.6)	0.05 (32)	0.167 (.075)
3 (10)	0.375 (9.5)	0.11 (71)	0.376 (.171)
4 (13)	0.500 (12.5)	0.20 (127)	0.668 (.303)
5 (16)	0.625 (15.5)	0.31 (198)	1.043 (.473)
6 (19)	0.750 (19.0)	0.44 (285)	1.502 (.681)
7 (22)	0.875 (22.0)	0.60 (388)	2.044 (.927)
8 (25)	1.000 (25.5)	0.79 (507)	2.670 (2.211)
9 (29)	1.128 (28.5)	1.00 (641)	3.400 (1.542)
10 (32)	1.270 (32.0)	1.27 (792)	4.303 (1.952)
11 (36)	1.410 (36.0)	1.56 (958)	5.313 (2.410)
14 (43)	1.693 (43.0)	2.25 (1552)	7.65 (3.470)

18 (57)	2.257 (57.5)	4.00 (2565)	13.60 (6.169)

Smooth, round bars shall be designated by size number through a No. 4. Smooth bars above No. 4 shall be designated by diameter in inches.

C. Smooth Bar and Spiral Reinforcement

Smooth bars and dowels for concrete pavement must have a minimum yield strength of 60 ksi (414 MPa) and meet ASTM A615/615M. Smooth bars that are greater in diameter than a No. 3 (10 mm) designation shall conform to ASTM A615 or meet the physical requirements of ASTM A36.

Spiral reinforcement shall be either smooth or deformed bars or wire of the minimum size or gauge indicated on the drawings. Bars for spiral reinforcement shall comply with ASTM A615 Grade 40(300), ASTM A996, Type A, Grade 40 (300); or ASTM A675, Grade 80(550), meeting dimensional requirements of ASTM A615. Smooth wire shall comply with ASTM A82, and deformed wire shall comply with ASTM A496.

D. Weldable Reinforcing Steel

Reinforcing steel to be welded must comply with ASTM A706 or have a carbon equivalent (C.E.) of at most 0.55%. A report of chemical analysis showing the percentages of elements necessary to establish C.E. is required for reinforcing steel that does not meet ASTM A706 to be structurally welded. No tack welding will be allowed. All welding shall conform to the requirements of AWS D1.1/D1.1M.

The requirements above do not apply to the following miscellaneous welding applications:

Splicing reinforcing steel to extend bars in the bottom of a drilled shaft;

Attaching chairs to the reinforcing steel cage of a drilled shaft;

Armor joints and their supports;

Screed rail and form hanger supports where permitted on steel units;

Reinforcing steel to R-bars for lateral stability between prestressed beams, spirals, or bands of reinforcing bars in drilled shaft cages;

Permanent bridge deck forms;

Steel added in railing when slip-form construction is used; and

Other similar miscellaneous members that have no load carrying capacity in the completed structure.

E. Welded Wire Fabric

Wire shall conform to the requirements of the Standard Specifications for Cold-Drawn Steel Wire for Concrete Reinforcement, ASTM A 82 or A 496. Wire fabric, when used as reinforcement, shall conform to ASTM A 185 or A 497.

When wire is ordered by size numbers, the following relation between size number, diameter in inches and area shall apply unless otherwise indicated on the drawings:

Size, W Number 1/100 in^2 (mm2)	Nominal Diameter inch (mm)	Nominal Area, sq. inches (mm^2)
31 (200)	0.628 (16.0)	0.310 (200)
30 (194)	0.618 (15.7)	0.300 (194)
28 (181)	0.597 (15.2)	0.280 (181)
26 (168)	0.575 (14.6)	0.260 (168)
24 (155)	0.553 (14.0)	0.240 (155)
22 (142)	0.529 (13.4)	0.220 (142)
20 (129)	0.505 (12.8)	0.200 (129)
18 (116)	0.479 (12.2)	0.180 (116)
16 (103)	0.451 (11.5)	0.160 (103)
14 (90)	0.422 (10.7)	0.140 (90)
12 (77)	0.391 (9.9)	0.120 (77)
10 (65)	0.357 (9.1)	0.100 (65)
8 (52)	0.319 (8.1)	0.080 (52)
7 (45)	0.299 (7.6)	0.070 (45)
6 (39)	0.276 (7.0)	0.060 (39)
5.5 (35)	0.265 (6.7)	0.055 (35)
5 (32)	0.252 (6.4)	0.050 (32)
4.5 (29)	0.239 (6.1)	0.045 (29)

4 (26)	0.226 (5.7)	0.040 (26)
3.5 (23)	0.211 (5.4)	0.035 (23)
3 (19)	0.195 (5.0)	0.030 (19)
2.5 (16)	0.178 (4.5)	0.025 (16)
2 (13)	0.160 (4.1)	0.020 (13)
1.5 (9)	0.138 (3.5)	0.015 (9.7)
1.2 (8)	0.124 (3.1)	0.012 (7.7)
1 (6)	0.113 (2.9)	0.010 (6.5)
0.5 (3)	0.080 (2.0)	0.005 (3.2)

Where deformed wire is required, the size number shall be preceded by D and for smooth wire the prefix W shall be shown.

Welded wire fabric shall be designated as follows: 6 x 12 – W16 x W8, which indicates a 6 in. (150 mm) longitudinal wire spacing and 12-in (300 mm) transverse wire spacing with smooth No. 16 (103) wire longitudinally and smooth no. 8 (52) wire transversely.

F. Epoxy Coating

Epoxy coating shall be required as indicated on the drawings. Prior to furnishing epoxy-coated reinforcing steel, the epoxy applicator must be included on the list of approved applicators that is maintained by the Construction Division of the State of Texas Department of Transportation.

The reinforcing steel shall be epoxy coated in accordance with the following.

Epoxy Coating Requirements for Reinforcing Steel

Material	Specification
Bar	ASTM A775 or A934
Wire or Fabric	ASTM A884 Class A or B
Mechanical Coupler	As indicated on the drawings

Hardware	As indicated on the drawings

The epoxy coating material and coating repair material shall comply with TxDoT's DMS-8130, "Epoxy Powder Coating for Reinforcing Steel". The applicator shall not patch more than ¼ inch total length in any foot (20 mm total length in any meter) at the applicator's plant.

The epoxy-coated reinforcing steel shall be sampled and tested in accordance with TxDoT Test Method Tex-739-I, "Sampling and Testing Epoxy Coated Reinforcing Steel".

The identification of all reinforcing steel shall be maintained throughout the epoxy coating and fabrication and until delivery to the project site.

Written certification that the epoxy-coated reinforcing steel meets the requirements of this Item shall be provided along with a copy of the manufacturer's control tests.

G. Mechanical Couplers

When mechanical splices in reinforcing steel bars are indicated on the drawings, the following types of couplers may be used:

Sleeve-filler

Sleeve-threaded

Sleeve-swaged, or

Sleeve-wedge.

H. Chairs and Supports

Chairs and Supports shall be steel, precast mortar or concrete blocks cast in molds meeting the approval of the Engineer or designated representative of sufficient strength to position the reinforcement as indicated on the drawings when supporting the dead load of the reinforcement, the weight of the workers placing concrete and the weight of the concrete bearing on the steel. Chairs shall be plastic coated when indicated on the drawings.

Chair Types and Applicable Uses	
Structural or Architectural Elements (columns, beams, walls, slabs) exposed to weather, not subjected to sand blasting, water blasting or grinding.	Galvanized steel or steel chairs with plastic coated feet.

Structural or Architectural Elements exposed to weather and subject to sand blasting, water blasting or grinding.	Stainless steel chairs.
Structural or Architectural Elements not exposed to weather or corrosive conditions.	Uncoated steel chairs
Slabs and grade beams cast on grade.	Steel chairs with a base with 9 inch² (58 cm^2) minimum area or sufficient area to prevent the chair from sinking into fill or subgrade. Precast mortar or concrete blocks meeting the requirements of this item may be used.

406S.4 Bending

The reinforcement shall be bent cold, true to the shapes indicated on the drawings. Bending shall preferably be done in the shop. Irregularities in bending shall be cause for rejection. Improperly fabricated, damaged or broken bars shall be replaced at no additional expense to the City. Damaged or broken bars embedded in a previous concrete placement shall be repaired using a method approved by the Engineer or designated representative.

Unless otherwise indicated on the drawings, the inside diameter of bar bends, in terms of the nominal bar diameter (d), shall be as follows:

Bends of 90 degrees and greater in stirrups, ties and other secondary bars that enclose another bar in the bend.

Bar Number in 1/8th inches (mm)	Diameter
3, 4, 5 (10, 13, 16)	4d
6, 7, 8	6d

All bends in main bars and in secondary bars not covered above.

Bar Number in 1/8th inches (mm)	Diameter
3 thru 8 (10 thru 25)	6d
9, 10, 11 (29, 32, 36)	8d
14, 18 (43, 57)	10d

406S.5 Tolerances

Fabricating tolerances for bars shall not be greater than shown on Standard (Detail) 406S-1.

406S.6 Storing

Steel reinforcement shall be stored above the surface of the ground upon platforms, skids or other supports and shall be protected as far as practicable from mechanical injury and surface deterioration caused by exposure to conditions producing rust. When placed in the work, reinforcement shall be free from dirt, paint, grease, oil or other foreign materials. Reinforcement shall be free from injurious defects such as cracks and laminations. Rust, surface seams, surface irregularities or mill scale will not be cause for rejection, provided the minimum dimensions, cross sectional area and tensile properties of a hand wire brushed specimen meets the physical requirements for the size and grade of steel indicated on the drawings.

406S.7 Splices

Splicing of bars, except when indicated on the drawings or specified herein, will not be permitted without written approval of the Engineer or designated representative. No substitution of bars will be allowed without the approval of the Engineer or designated representative. Any splicing of substituted bars shall conform to the requirements in the Table below.

Splices not indicated on the drawings will be permitted in slabs not more than 15 inches (380 mm) in thickness, columns, walls and parapets.

Splices will not be permitted in bars 30 feet (9.1 meters) or less in plan length unless otherwise approved. For bars exceeding 30 feet (9.1 meters) in plan length, the distance center to center of splices shall not be less than 30 feet (9.1 meters) minus 1 splice length, with no more than 1 individual bar length less than 10 feet (3 meters). Splices not indicated on the drawings, but permitted hereby, shall conform to the Table

below. The specified concrete cover shall be maintained at such splices and the bars placed in contact and securely tied together.

Minimum Lap Requirements		
Bar Number in 1/8th inches (mm)	Uncoated Lap Length	Coated Lap Length
3 (10)	1 foot 4 inches (0.4 meters)	2 foot 0 inches (0.610 meters)
4 (13)	1 foot 9 inches (0.533 meters)	2 foot 8 inches (0.813 meters)
5 (16)	2 foot 2 inches (0.660 meters)	3 feet 3 inches (0.991meters)
6 (19)	2 foot 7 inches (0.787 meters)	3 feet 11 inches (1.194 meters)
7 (22)	3 feet 5 inches (1.041 meters)	5 feet 2 inches (1.575 meters)
No. 8 (25)	4 feet 6 inches (1.372 meters)	6 feet 9 inches (2.057 meters)
No. 9 (29)	5 feet 8 inches (1.727 meters)	8 feet 6 inches (2.591 meters)
No. 10 (32)	7 feet 3 inches (2.210 meters)	10 feet 11 inches (3.327 meters)
No. 11 (36)	8 feet 11 inches (2.718 meters)	13 feet 5 inches (4.089 meters)

Spiral steel shall be lapped a minimum of 1 turn. Bar No. 14 and No. 18 may not be lapped.

Welded wire fabric shall be spliced using a lap length that includes an overlap of at least 2 cross wires plus 2 inches (50 mm) on each sheet or roll.

Splices using bars that develop equivalent strength and are lapped in accordance with the table above are permitted.

Welding of reinforcing bars may be used only where indicated on the drawings or as permitted herein. All welding operations, processes, equipment, materials, quality of work and inspection shall conform to the requirements indicated on the drawings. All

splices shall be of such dimension and character as to develop the full strength of the bar being spliced.

End preparation for butt-welding reinforcing bars shall be done in the field, except Bar No. 6 and larger shall be done in the shop. Delivered bars shall be of sufficient length to permit this practice.

For box culvert extensions with less than 1 foot (0.3 meters) of fill, the existing longitudinal bars shall have a lap with the new bars as shown in the table above. For box culvert extensions with more than 1 foot (0.3 meters) of fill, a minimum lap of 12 inches (300 mm) will be required.

Unless otherwise indicated on the drawings, dowel bars transferring tensile stresses shall have a minimum embedment equal to the minimum lap requirements shown in the table above. Shear transfer dowels shall have a minimum embedment of 12 inches (300 mm).

406S.8 Placement

Reinforcement shall be placed as near as possible in the position indicated on the drawings. Unless otherwise indicated on the drawings, dimensions shown for reinforcement are to the centers of the bars. In the plane of the steel parallel to the nearest surface of concrete, bars shall not vary from plan placement by more than 1/12 of the spacing between bars. In the plane of the steel perpendicular to the nearest surface of concrete, bars shall not vary from plan placement by more than 1/4 inch (6 mm). Cover of concrete to the nearest surface of steel shall be as follows:

	Minimum Cover, Inches (mm)
(a) Concrete cast against and permanently exposed to earth	3 (76 mm)
(b) Concrete exposed to earth or weather:	
Bar No. 6 (19) through No. 18 bars (57)	2 (51 mm)
Bar No. 5 (16), W31 (W200) or D31 (D200) wire and smaller	1 ½ (38 mm)
(c) Concrete not exposed to weather or in contact with ground:	

Slabs, walls, joists:	
Bar No. 14 (43) and 18 (57)	1 ½ (38mm)
Bar No. 11 (36) and smaller	1 (25 mm)
Beams, columns:	
Primary reinforcement, ties, stirrups, spirals	1 ½ (38 mm)
Shells, folded plate members:	
Bar No. 6 (19) and larger	1 (25 mm)
Bar No. 5 (16), W31 (W200) or D31 (D200) wire, and smaller	1 (25 mm)

Vertical stirrups shall always pass around the main tension members and be attached securely thereto.

The reinforcing steel shall be located accurately in the forms and held firmly in place before and during concrete placement by means of bar supports that are adequate in strength and number to prevent displacement and to keep the steel at the required distance from the form surface. Bars shall be supported by means of approved galvanized metal spacers, metal spacers with plastic coated tips, stainless steel spacers, plastic spacers or approved precast mortar or concrete blocks when supports are in contact with removable or stay-in-place forms. Bright basic bar supports shall be used to support reinforcing steel placed in slab overlays on concrete panels or on existing concrete slabs. Bar supports in contact with soil or subgrade shall be approved.

For bar supports with plastic tips, the plastic protection must be at least 3/32 in. (2.4 mm) thick and extend upward on the wire to a point at least ½ in. (12.5 mm) above the formwork.

For approval of plastic spacers on a project, representative samples of the plastic shall show no visible indications of deterioration after immersion in a 5 percent solution of sodium hydroxide for 120 hours.

All accessories such as tie wires, bar chairs, supports, or clips used with epoxy-coated reinforcement shall be of steel, fully coated with epoxy or plastic. When approved by the Engineer or designated representative, plastic supports may also be used with epoxy-coated reinforcement.

All reinforcing steel shall be tied at all intersections, except that where spacing is less than 1 foot (300 mm) in each direction, alternate intersections only need be tied. For reinforcing steel cages for other structural members, the steel shall be tied at enough intersections to provide a rigid cage of steel. Mats of wire fabric shall overlap each other 1 full space as a minimum to maintain a uniform strength and shall be tied at the ends and edges.

Where prefabricated deformed wire mats are specified or if the Contractor requests, welded wire fabric may be substituted for a comparable area of steel reinforcing bar plan, subject to the approval of the Engineer or designated representative.

Mortar or concrete blocks shall be cast to uniform dimensions with adequate bearing area. A suitable tie wire shall be provided in each block, to be used for anchoring to the steel. Except in unusual cases and when specifically authorized by the Engineer, the size of the surface to be placed adjacent to the forms shall not exceed 2 1/2 inches (63.5 mm) square or the equivalent thereof in cases where circular or rectangular areas are provided. Blocks shall be cast accurately to the thickness required and the surface to be placed adjacent to the forms shall be a true plane, free of surface imperfections. The blocks shall be cured by covering them with wet burlap or mats for a period of 72 hours. Mortar for blocks should contain approximately 1 part hydraulic cement to three parts sand. Concrete for blocks should contain 850 pounds of hydraulic cement per cubic yard (500 kilograms per cubic meter) of concrete

Individual bar supports shall be placed in rows at 4-ft (1.22 meters) maximum spacing in each direction. Continuous type bar supports shall be placed at 4-ft (1.22 meters) maximum spacing. Continuous bar supports shall be used with permanent metal deck forms.

The exposure of the ends of longitudinals, stirrups and spacers used to position the reinforcement in concrete pipe and in precast box culverts or storm drains is not a cause for rejection.

Reinforcing steel for bridge slabs, top slabs of direct traffic culverts, and top slabs of prestressed box beams at all intersections, except tie only alternate intersections where spacing is less than 1 ft. (300 mm) in each direction.

For steel reinforcing cages for other structural members, reinforcement shall be supported and tied in such a manner that a sufficiently rigid cage of steel is provided. Fasten mats of wire fabric securely at the ends and edges. If the cage is not adequately supported to resist settlement or floating upward of the steel, overturning of truss bars or movement in any direction during concrete placement, permission to continue concrete placement will be withheld until corrective measures are taken. Sufficient measurements shall be made during concrete placement to insure compliance with the above.

No concrete shall be deposited until the Engineer or designated representative has reviewed the placement of the reinforcing steel and all mortar, mud, dirt, etc, shall be cleaned from the reinforcement, forms, workers' boots and tools. Do not place concrete until authorized by the Engineer or designated representative

406S.9 Handling, Placement and Repair of Epoxy-coated Reinforcement Steel

A. Handling

Systems for handling coated-reinforcement with padded contact areas shall be provided. Handling bands shall be padded to prevent damage to the coating. Bundles of coated reinforcement shall be lifted with a strongback, spreader bar, multiple supports or a platform bridge. The bundled reinforcement shall be carefully transported and stored on protective cribbing. The coated reinforcement should not be dropped or drug during handling.

B. Construction Methods

Coated reinforcement shall not be flame-cut but shall be sawn or shear-cut only when approved. Cut ends shall be coated as specified in Section C, “Repair of Coating”.

Coated reinforcement steel shall not be welded or mechanically coupled except where specifically indicated on the drawings. When welding or coupling is indicated on the drawing, the epoxy coating shall be removed at least 6 in. (150 mm) beyond the weld limits before welding and 2 in. (50 mm) beyond the limits of the mechanical coupler before assembly. After the welding or coupling operation is completed the steel shall be cleaned of oil, grease, moisture, dirt, welding contamination (slag or acid residue) and rust to a near-white finish. The existing epoxy coating shall be examined for damage and any damaged or loose epoxy shall be removed to expose sound epoxy coating.

After cleaning the coated-steel, the splice area shall be coated with epoxy repair material to a thickness of 7 to 17 mils (0.18 to 0.43 mm) after curing. A second application of the repair material shall be applied to the bar and coupler interface to ensure complete sealing of the joint.

C. Repair of Coating

The material used for coating repair shall comply with the requirements of this Item and ASTM D3963/D3963M, “Specification for Fabrication and Jobsite Handling of Epoxy-coated Reinforcing Steel Bars”. Repairs shall be made in accordance with procedures recommended by the manufacturer of the epoxy coating powder. For areas to be patched, a minimum coating thickness as required for the original coating shall be applied. All visible damage to the coating shall be repaired.

Sawed and sheared ends, cuts, breaks and other damage shall be promptly repaired before additional oxidation occurs. The areas to be repaired shall be cleaned to ensure that they free from surface contaminants. Repairs shall be made in the shop or in the field as required.

406S.10 Measurement

The measurement of quantities of reinforcement furnished and placed will be based on the calculated weight of the steel actually placed as indicated on the drawings, with no allowance made for added bar lengths for splices requested by the Contractor nor for

extra steel used when bars larger than those indicated on the drawings are used or for a higher grade of steel that is substituted with the permission of the Engineer or designated representative. Tie wires and supporting devices will not be included in the calculated weights. The calculated weight of bar reinforcement will be determined using the theoretical bar weight set forth in this item.

Measurement required by a change in design will be computed as described above for the actual steel required to complete the work.

406S.11 Payment

Reinforcing steel will generally not be paid for directly, but shall be included in the unit price bid for the items of construction in which the reinforcing steel is used.

When specified in the contract bid form as a separate pay item, this item shall be paid for at the contract unit price bid per pound of "Reinforcing Steel". The unit bid price shall include full compensation for all work specified herein including furnishing, bending, fabricating, welding and placing reinforcement, for all clips, blocks, metal spacers, ties, chairs, wire or other materials used for fastening reinforcement in place and for all tools, labor, equipment and incidentals necessary to complete the work.

Payment, when included as a contract pay item, will be made under:

Pay Item No. 406S-RC:	Reinforcing Steel -	Per Pound.
Pay Item No. 406S-ERC:	Epoxy-Coated Reinforcing Steel -	Per Pound.

END

SPECIFIC CROSS REFERENCE MATERIALS
Standard Specification Item 406S, "Reinforcing Steel"

American Society for Testing and Materials, ASTM

Designation	Description
ASTM A 36/A 36M	Carbon Structural Steel
ASTM A 82	Steel Wire, Plain, for Concrete Reinforcement
ASTM A 185	Steel Welded Wire Fabric, Plain, for Concrete Reinforcement
ASTM A 496	Steel Wire, Deformed, for Concrete Reinforcement
ASTM A 497	Steel Welded Wire Fabric, Deformed, for Concrete Reinforcement
ASTM A 615/A 615M	Deformed and Plain Billet-steel Bars for Concrete Reinforcement
ASTM A 675/A 675M	Steel Bars, Carbon, Hot-Wrought, Special Quality, Mechanical Properties
ASTM A 706/A 706M	Low- Alloy Steel Deformed and Plain Bars for Concrete Reinforcement
ASTM A 775/A 775M	Epoxy-Coated Reinforcing Steel Bars
ASTM A 884/A 884M	Epoxy-Coated Steel Wire and Welded Wire Fabric For Reinforcement
ASTM A 934/A 934M	Epoxy-Coated Prefabricated Reinforcing Steel Bars
ASTM A 996/A 996M	Rail-Steel and Axle-Steel Deformed Bars for Concrete Reinforcement
ASTM D3963/D3963M	Fabrication and Jobsite Handling of Epoxy-coated Reinforcing Steel Bars

Texas Department of Transportation: Manual of Testing Procedures

Designation	Description
Tex-739-I	Sampling and Testing Epoxy Coated Reinforcing Steel

City of Austin Standard (Details)

Designation	Description
Standard 406S-1	Reinforced Steel Tolerances

Texas Department of Transportation: Departmental Material Specifications

Designation	Description
DMS 8130	Epoxy Powder Coating for Reinforcing Steel

American Welding Society

Designation	Description
AWS D1.1/D1.1M	Structural Welding Code

RELATED CROSS REFERENCE MATERIALS
Standard Specification Item 406S, "Reinforcing Steel"

City of Austin Standard Specification Items

Designation	Description
Item No. 360	Concrete Pavement
Item No. 403S	Concrete for Structures
Item No. 410S	Concrete Structures
Item No. 414S	Concrete Retaining Walls

Item No. 420S	Drilled Shaft Foundations
Item No. 830S	Traffic Signal Controller Foundation
Item No. 831S	Traffic Signal Drilled Shaft Foundation

Texas Department of Transportation: Standard Specifications for Construction and Maintenance of Highways, Streets, and Bridges

Designation	Description
Item No. 360	Concrete Pavement
Item No. 420	Concrete Structures
Item No. 421	Hydraulic Cement Concrete
Item No. 422	Reinforced Concrete Slab
Item No. 423	Retaining Walls
Item No. 440	Reinforcing Steel

803S.1 Description

This item shall govern for providing, installing, moving, replacing, maintaining, cleaning and removing upon completion of the work, all temporary or permanent street closure barricades, signs, cones, lights or other devices required to handle the traffic in conformance with the current edition of the Texas Manual of Uniform Traffic Control Devices for Street and Highways and as indicated on the Drawings or directed by the Engineer or designated representative.

Constructing A Detour, if required, shall conform to Standard Specification Item No. 801S, " Constructing A Detour". Capital Improvement Project Signs shall conform to Standard Specification Item No. 802S, " Project Signs".

This item shall also include the installation of all required safety fencing as described in the latest adopted version of Standard Detail 804S-4.

This specification is applicable for projects or work involving either inch-pound or SI units. Within the text, the inch-pound units are given preference followed by SI units shown within parentheses.

803S.2 Submittals

The submittal requirements of this specification item include:

A. Type of Barricade and proposed materials and Construction of the barricade,

B. Test results for Retro-Reflective sheeting.

803S.3 Materials

All barricades, signs, cones, lights and other types of devices to handle traffic, as indicated on the Drawings or directed by the Engineer or designated representative, shall conform to details shown on the Drawings or those indicated in the Texas Manual on Uniform Traffic Control Devices (TMUTCD).

803S.4 Construction Methods

Prior to commencement of construction, suitable "Barricades, Signs and Traffic Handling" devices shall be installed to protect the workers and the public.

The Contractor shall be responsible for the installation of all markers, signs and barricades in accordance with the Drawings and in conformance with the Texas Manual on Uniform Traffic Control Devices (TMUTCD) and/or as indicated on the Drawings or directed by the Engineer or designated representative. If, in the opinion of the Engineer or designated representative, additional markers, signs or barricades are needed in the interest of safety, the Contractor will install such as are required or as directed by the Engineer or designated representative. All changes and/or revisions to the detour/traffic control plan shall be approved by the Engineer or designated representative.

Lumber shall be painted with 2 coats of paint as indicated on the Drawings.

803S.5 Maintenance

It shall be the Contractor's responsibility to maintain, clean, move and replace if necessary, barricades, signs and traffic handling devices during the time required for construction of the project. Permanent barricades shall be constructed as required after the completion of the street by drilling holes to place the posts and concrete foundations. Foundation concrete shall be cured before the rails are attached. When no longer needed, all temporary Barricades, Signs and Traffic Handling Devices shall be removed and the area restored to its original condition or as directed by the Engineer or designated representative.

803S.6 Measurement

The work performed and material furnished as prescribed by this item, City of Austin Standard Details, details included on the Drawings or indicated in the TMUTCD shall be measured as follows:

A. Pavement Markings.

   All pavement marking required for proper installation of the designated Traffic Control Plans and Details, as well as required removal of existing pavement marking, shall be measured and paid for under Standard Specification Item No. 870S, “Work Zone Pavement Markings” and Standard Specification Item No. 874S, “Eliminating Existing Pavement Markings”.

B. Barricades, Signs and Traffic Handling.

   All work performed and material furnished as prescribed by this item, City of Austin Standard Details, details shown on the Drawings or indicated in the TMUTCD, that are not included in the above paragraph, shall be measured by the number of calendar days, working days or months of actual service.

   Traffic control for the project will be measured and paid for once per contract defined time period, i.e. either per Calendar Day, Working day or Month at the contract rate, regardless of the number of set-ups, locations or streets under construction.

C. Safety Fencing

   Safety fencing will be measured by the lineal foot.

803S.7 Payment

The work performed and materials furnished as prescribed by this item, measured as provided under section “803S.6 Measurement” shall be paid for at the contract unit price for barricades, signs and traffic handling. This unit price shall include full compensation for furnishing, placement and removal of all materials and for all labor, tools, equipment, and incidentals necessary to complete the work.

Payment will be made under:

Pay Item No. 803S -CD:	Barricades, Signs, and Traffic Handling	Per Calendar Day.
Pay Item No. 803S-WD:	Barricades, Signs, and Traffic Handling	Per Working Day.
Pay Item No. 803S-MO:	Barricades, Signs, and Traffic Handling	Per Month.
Pay Item No. 803S-SF:	Safety Fence	Per Lineal Foot.

End

SPECIFIC CROSS REFERENCE MATERIALS
Specification Item No. 803S, "Barricades, Signs and Traffic Handling"

City of Austin Standard Specifications

Designation	Description
Item No. 801S	Constructing A Detour
Item No. 802S	Project Signs
Item No. 870S	Work Zone Pavement Markings
Item No. 874S	Eliminating Existing Pavement Markings and Markers

Texas Technical Documents:

Designation	Description
(TMUTCD)	Texas Manual on Uniform Traffic Control Devices

RELATED CROSS REFERENCE MATERIALS
Specification Item No. 803S, "Barricades, Signs and Traffic Handling"

City of Austin Standard Specifications

Designation	Description
Item No. 403S	Concrete for Structures
Item No. 860S	Pavement Marking Paint (Reflectorized)
Item No. 863S	Reflectorized Pavement Markers
Item No. 864S	Abbreviated Pavement Markings
Item No. 867S	Epoxy Adhesive
Item No. 871S	Reflectorized Pavement Markings
Item No. 875S	Pavement Surface Preparation For Markings

City of Austin Standard Details

Designation	Description
803S-1	Street-End Barricades

Texas Department of Transportation: Standard Specifications for Construction and Maintenance of Highways, Streets, and Bridges

Designation	Description
Item No. 502	Barricades, Signs and Traffic Handling
Item No. 508	Constructing Detours
Item No. 510	One-Way Traffic Control
Item No. 512	Portable Concrete Traffic Barrier
Item No. 514	Permanent Concrete Traffic Barrier
Item No. 662	Work Zone Pavement Markings
Item No. 666	Reflectorized Pavement Markings
Item No. 667	Prefabricated Pavement Markings
Item No. 672	Raised Pavement Markers
Item No. 677	Eliminating Existing Pavement Markings and Markers
Item No. 678	Pavement Surface Preparation For Markings

SPECIAL PROVISION
To the Measurement and Payment Section of the City of Austin Standard Technical Specifications

For this Project all adopted and/or referenced City of Austin Standard Technical Specification Items are hereby amended with respect to the clauses cited below. No other clauses or requirements of these Items are waived or changed hereby.

In all adopted and/or referenced City of Austin Standard Specifications, in the Sections titled "Measurement and Payment", delete all text in its entirety and replace with the following paragraph:

"All work items installed, provided, constructed, etc. under this specification shall not be paid for separately but shall be considered subsidiary to the lump sum bid price for the project. No separate pay will be provided for any work governed by this specification. The cost of all work materials, labor, overhead, insurance, equipment, etc. necessary to finish the work complete in place shall be included in the lump sum bid price for the project."

End

PART 1 - **GENERAL**

1.1 RELATED DOCUMENTS

A. Drawings and general provisions of the Contract, including General and Supplementary Conditions and Division 01 Specification Sections, apply to this Section.

1.2 SUMMARY

A. Section Includes:
   1. Dry-installed or slurry displacement-installed drilled piers at Contractor's choice.

B. Related Sections:
   1. Section 403S Concrete for Structures.

1.3 UNIT PRICES

A. Drilled Piers: Actual net volume of drilled piers in place and approved. Actual length, shaft diameter, and bell diameter if applicable, may vary, to coincide with elevations where satisfactory bearing strata are encountered. These dimensions may also vary with actual bearing value of bearing strata determined by an independent testing and inspecting agency. Adjustments are made on net variation of total quantities, based on design dimensions for shafts and bells.

   1. Base bids on indicated number of drilled piers and, for each pier, the design length from top elevation to bottom of shaft, extended through the bell, if applicable, and the diameter of shaft and bell.
   2. Unit prices include labor, materials, tools, equipment, and incidentals required for excavation, trimming, shoring, casings, dewatering, reinforcement, concrete fill, testing and inspecting, and other items for complete drilled-pier installation.

B. Rock Measurement: Volume of rock actually removed, measured in original position, but not to exceed outside dimensions of drilled piers cast against rock. Unit prices for rock excavation include replacement with approved materials.

1.4 PREINSTALLATION MEETINGS

A. Pre-installation Conference: Conduct conference at Project site

   1. Review methods and procedures related to drilled piers including, but not limited to, the following:

      a. Review geotechnical report.
      b. Discuss existing utilities and subsurface conditions.
      c. Review coordination with temporary controls and protections.
      d. Review measurement and payment of unit prices.

1.5 ACTION SUBMITTALS

A. Product Data: For each type of product.

B. Design Mixtures: For each concrete mixture. Submit alternative design mixtures when characteristics of materials, Project conditions, weather, test results, or other circumstances warrant adjustments.

1. Indicate amounts of mixing water to be withheld for later addition at Project site.

C. Shop Drawings: For concrete reinforcement, detailing fabricating, bending, supporting, and placing.

1.6 INFORMATIONAL SUBMITTALS

A. Qualification Data: For Installer land surveyor testing agency.

B. Material Certificates: From manufacturer, for the following:

1. Cementitious materials.
2. Admixtures.
3. Steel reinforcement and accessories.

C. Material Test Reports: For each material below, by a qualified testing agency:

1. Aggregates**.**

D. Field quality-control reports.

1.7 CLOSEOUT SUBMITTALS

A. Record drawings.

1.8 QUALITY ASSURANCE

A. Installer Qualifications: An experienced installer that has specialized in drilled-pier work.

B. Testing Agency Qualifications: Qualified according to ASTM C 1077, ASTM D 3740, and ASTM E 329 for testing indicated.

1.9 FIELD CONDITIONS

A. Existing Utilities: Locate existing underground utilities before excavating drilled piers. If utilities are to remain in place, provide protection from damage during drilled-pier operations.

1. Should uncharted or incorrectly charted piping or other utilities be encountered during excavation, adapt drilling procedure if necessary to prevent damage to utilities.

Cooperate with Owner and utility companies in keeping services and facilities in operation without interruption. Repair damaged utilities to satisfaction of utility owner.

B. Interruption of Existing Utilities: Do not interrupt any utility to facilities occupied by Owner or others unless permitted under the following conditions and then only after arranging to provide temporary utility according to requirements indicated:

1. Notify Architect no fewer than two days in advance of proposed interruption of utility.
2. Do not proceed with interruption of utility without Architect's written permission.

C. Project-Site Information: A geotechnical report has been prepared for this Project and is available for information only. The opinions expressed in this report are those of geotechnical engineer and represent interpretations of subsoil conditions, tests, and results of analyses conducted by geotechnical engineer. Owner is not responsible for interpretations or conclusions drawn from this data.

1. Make additional test borings and conduct other exploratory operations necessary for drilled piers.
2. The geotechnical report is included elsewhere in the Project Manual.

D. Survey Work: Engage a qualified land surveyor or professional engineer to perform surveys, layouts, and measurements for drilled piers. Before excavating, lay out each drilled pier to lines and levels required. Record actual measurements of each drilled pier's location, shaft diameter, bottom and top elevations, deviations from specified tolerances, and other specified data.

1. Record and maintain information pertinent to each drilled pier and indicate on record Drawings. Cooperate with Owner's testing and inspecting agency to provide data for required reports.

PART 2 - PRODUCTS

2.1 PERFORMANCE REQUIREMENTS

A. Drilled-Pier Standard: Comply with ACI 336.1 except as modified in this Section.

2.2 STEEL REINFORCEMENT

2.3 CONCRETE MATERIALS

A. See Section 403S Concrete for Structures.

2.4 STEEL CASINGS

A. Steel Pipe Casings: ASTM A 283/A 283M, Grade C, or ASTM A 36/A 36M, carbon-steel plate, with joints full-penetration welded according to AWS D1.1/D1.1M.

B. Corrugated-Steel Pipe Casings: ASTM A 929/A 929M, steel sheet, zinc coated.

C. Liners: Comply with ACI 336.1.

2.5 SLURRY

A. Slurry: Pulverized bentonitemixed with water to form stable colloidal suspension; complying with ACI 336.1 for density, viscosity, sand content, and pH.

2.6 CONCRETE MIXTURES

A. Prepare design mixtures for each type and strength of concrete, proportioned on the basis of laboratory trial mixture or field test data, or both, according to ACI 301 (ACI 301M).

B. Cementitious Materials: Limit percentage, by weight, of cementitious materials other than portland cement according to ACI 301 (ACI 301M) limits as if concrete were exposed to deicing chemicals.

C. Proportion normal-weight concrete mixture as follows:

1. Compressive Strength (28 Days**4000 psi (27.6 MPa)**).
2. Maximum Water-Cementitious Materials Ratio: 0.45
3. Minimum Slump: Capable of maintaining the following slump until completion of placement:
   a. 6 inches (150 mm) for temporary-casing drilling method.

4. Air Content: Do not air entrain concrete.

5. Concrete Class S5 as modified above.

2.7 REINFORCEMENT FABRICATION

A. Fabricate steel reinforcement according to CRSI's "Manual of Standard Practice."

2.8 CONCRETE MIXING

A. Ready-Mixed Concrete: Measure, batch, mix, and deliver concrete according to ASTM C 94/C 94M, and furnish batch ticket information.

1. When air temperature is between 85 and 90 deg F (30 and 32 deg C), reduce mixing and delivery time from 1-1/2 hours to 75 minutes; when air temperature is above 90 deg F (32 deg C), reduce mixing and delivery time to 60 minutes.

PART 3 - EXECUTION

3.1 PREPARATION

A. Protect structures, utilities, sidewalks, pavements, and other facilities from damage caused by settlement, lateral movement, vibration, and other hazards created by drilled-pier operations.

3.2 EXCAVATION

A. Unclassified Excavation: Excavate to bearing elevations regardless of character of surface and subsurface conditions encountered. Unclassified excavated materials may include rock, soil materials, and obstructions.

1. Obstructions: Unclassified excavation may include removal of unanticipated boulders, concrete, masonry, or other subsurface obstructions. No changes in the Contract Sum or the Contract Time are authorized for removal of obstructions.

B. Classified Excavation: Excavation is classified as standard excavation, special excavation, and obstruction removal and includes excavation to bearing elevations as follows:

1. Standard excavation includes excavation accomplished with conventional augers fitted with soil or rock teeth, drilling buckets, or underreaming tools attached to drilling equipment of size, power, torque, and downthrust necessary for the Work.
2. Special excavation includes excavation that requires special equipment or procedures where drilled-pier excavation equipment used in standard excavation, operating at maximum power, torque, and downthrust, cannot advance the shaft.

    a. Special excavation requires use of special rock augers, core barrels, air tools, blasting, or other methods of hand excavation.
    b. Earth seams, rock fragments, and voids included in rock excavation area are considered rock for full volume of shaft from initial contact with rock.

3. Obstructions: Payment for removing unanticipated boulders, concrete, masonry, or other subsurface obstructions that cannot be removed by conventional augers fitted with soil or rock teeth, drilling buckets, or underreaming tools attached to drilling equipment of size, power, torque, and downthrust necessary for the Work is according to Contract provisions for changes in the Work.

C. Prevent surface water from entering excavated shafts. Conduct water to site drainage facilities.

D. Excavate shafts for drilled piers to indicated elevations. Remove loose material from bottom of excavation.

1. Excavate bottom of drilled piers to level plane within 1:12 tolerance.
2. Remove water from excavated shafts before concreting.Retain first subparagraph below if socketing drilled pier into rock.

E. Notify and allow testing and inspecting agency to test and inspect bottom of excavation. If unsuitable bearing stratum is encountered, make adjustments to drilled piers as determined by Architect.

1. Do not excavate shafts deeper than elevations indicated unless approved by Architect.
2. Payment for additional authorized excavation is according to Contract provisions for changes in the Work.

F. Slurry Displacement Method: Stabilize excavation with slurry maintained a minimum of 60 inches (1500 mm) above ground-water level and above unstable soil strata to prevent caving or sloughing of shaft. Maintain slurry properties before concreting.

1. Excavate and complete concreting of drilled pier on same day, or redrill, clean, and test slurry in excavation before concreting.

G. Temporary Casings: Install watertight steel casings of sufficient length and thickness to prevent water seepage into shaft; to withstand compressive, displacement, and withdrawal stresses; and to maintain stability of shaft walls.

1. Remove temporary casings, maintained in plumb position, during concrete placement and before initial set of concrete.

H. Tolerances: Construct drilled piers to remain within ACI 336.1 tolerances.

1. If location or out-of-plumb tolerances are exceeded, provide corrective construction. Submit corrective construction proposals to Architect for review before proceeding.

3.3 STEEL REINFORCEMENT INSTALLATION

A. Comply with recommendations in CRSI's "Manual of Standard Practice" for fabricating, placing, and supporting reinforcement.

B. Clean reinforcement of loose rust and mill scale, earth, and other materials that reduce or destroy bond with concrete.

C. Fabricate and install reinforcing cages symmetrically about axis of shafts in a single unit.

D. Accurately position, support, and secure reinforcement against displacement during concreting. Maintain minimum cover over reinforcement.

E. Use templates to set embed plates, and other accessories furnished in work of other Sections. Provide blocking and holding devices to maintain required position during final concrete placement.

F. Protect exposed ends of extended reinforcement, dowels, or anchor bolts from mechanical damage and exposure to weather.

3.4 CONCRETE PLACEMENT

A. Place concrete in continuous operation and without segregation immediately after inspection and approval of shaft by a qualified Special Inspector

1. Construct a construction joint if concrete placement is delayed more than one hour. Level top surface of concrete and insert joint dowel bars. Before placing remainder of concrete,

clean surface laitance, roughen, and slush concrete with commercial bonding agent or with sand-cement grout mixed at ratio of 1:1.

B. Dry Method: Place concrete to fall vertically down the center of drilled pier without striking sides of shaft or steel reinforcement.

1. Where concrete cannot be directed down shaft without striking reinforcement, place concrete with chutes, tremies, or pumps.
2. Vibrate top 60 inches (1500 mm) of concrete.

C. Slurry Displacement Method: Place concrete in slurry-filled shafts by tremie methods or pumping. Control placement operations to ensure that tremie or pump pipe is embedded no less than 60 inches (1500 mm) into concrete and that flow of concrete is continuous from bottom to top of drilled pier.

D. Coordinate withdrawal of temporary casings with concrete placement to maintain at least a 60-inch (1500-mm) head of concrete above bottom of casing.

1. Vibrate top 60 inches (1500 mm) of concrete after withdrawal of temporary casing.

E. Screed concrete at cutoff elevation level and apply scoured, rough finish. Where cutoff elevation is above the ground elevation, form top section above grade and extend shaft to required elevation.

F. Protect concrete work, according to ACI 301 (ACI 301M), from frost, freezing, or low temperatures that could cause physical damage or reduced strength.

1. Do not use frozen materials or materials containing ice or snow. Do not place concrete on frozen subgrade or on subgrade containing frozen materials.
2. Do not use calcium chloride, salt, or other mineral-containing antifreeze agents or chemical accelerators.

G. If hot-weather conditions exist that would seriously impair quality and strength of concrete, place concrete according to ACI 301 (ACI 301M) to maintain delivered temperature of concrete at no more than 90 deg F (32 deg C).

1. Place concrete immediately on delivery. Keep exposed concrete surfaces and formed shaft extensions moist by fog sprays, wet burlap, or other effective means for a minimum of seven days.

3.5 FIELD QUALITY CONTROL

A. Special Inspections: Engage a qualified special inspector to perform the following special inspections:

1. Drilled piers.
2. Excavation.
3. Concrete.

B. Testing Agency: Engage a qualified testing agency to perform tests and inspections.

C. Drilled-Pier Tests and Inspections: For each drilled pier, before concrete placement.

1. Soil Testing: Bottom elevations, bearing capacities, and lengths of drilled piers indicated have been estimated from available soil data. Actual elevations and drilled-pier lengths and bearing capacities are determined by testing and inspecting agency. Final evaluations and approval of data are determined by Architect.

D. Concrete Tests and Inspections: ASTM C 172/C 172M except modified for slump to comply with ASTM C 94/C 94M.

1. Slump: ASTM C 143/C 143M; one test at point of placement for each compressive-strength test but no fewer than one test for each concrete load.
2. Concrete Temperature: ASTM C 1064/C 1064M; one test hourly when air temperature is 40 deg F (4.4 deg C) and below and 80 deg F (27 deg C) and above, and one test for each set of compressive-strength specimens.
3. Compression Test Specimens: ASTM C 31/C 31M; one set of four standard cylinders for each compressive-strength test unless otherwise indicated. Mold and store cylinders for laboratory-cured test specimens unless field-cured test specimens are required.
4. Compressive-Strength Tests: ASTM C 39/C 39M; one set for each drilled pier but not more than one set for each truck load. Test one specimen at seven days, test two specimens at 28 days, and retain one specimen in reserve for later testing if required.
5. If frequency of testing provides fewer than five strength tests for a given class of concrete, conduct tests from at least five randomly selected batches or from each batch if fewer than five are used.
6. If strength of field-cured cylinders is less than 85 percent of companion laboratory-cured cylinders, Contractor shall evaluate operations and provide corrective procedures for protecting and curing in-place concrete.
7. Strength of each concrete mixture is satisfactory if every average of any three consecutive compressive-strength tests equals or exceeds specified compressive strength and no compressive-strength test value falls below specified compressive strength by more than 500 psi (3.4 MPa).
8. Report test results in writing to Architect, concrete manufacturer, and Contractor within 48 hours of testing. List Project identification name and number, date of concrete placement, name of concrete testing and inspecting agency, location of concrete batch in Work, design compressive strength at 28 days, concrete mixture proportions and materials, compressive breaking strength, and type of break for both 7- and 28-day tests in reports of compressive-strength tests.
9. Nondestructive Testing: Impact hammer, sonoscope, or other nondestructive device may be permitted by Architect but not be used as sole basis for approval or rejection of concrete.
10. Additional Tests: Testing and inspecting agency to make additional tests of concrete if test results indicate that slump, compressive strengths, or other requirements have not been met, as directed by Architect.

    a. Continuous coring of drilled piers may be required, at Contractor's expense, if temporary casings have not been withdrawn within specified time limits or if observations of placement operations indicate deficient concrete quality, presence of voids, segregation, or other possible defects.

11. Perform additional testing and inspecting, at Contractor's expense, to determine compliance of replaced or additional work with specified requirements.
12. Correct deficiencies in the Work that test reports and inspections indicate do not comply with the Contract Documents.

E. An excavation, concrete, or a drilled pier will be considered defective if it does not pass tests and inspections.

F. Prepare test and inspection reports for each drilled pier as follows:

1. Actual top and bottom elevations.
2. Actual drilled-pier diameter at top, bottom, and bell.
3. Description of soil materials.
4. Description, location, and dimensions of obstructions.
5. Final top centerline location and deviations from requirements.
6. Variation of shaft from plumb.
7. Shaft excavating method.
8. Levelness of bottom and adequacy of cleanout.
9. Properties of slurry and slurry test results at time of slurry placement and at time of concrete placement.
10. Ground-water conditions and water-infiltration rate, depth, and pumping.
11. Description, purpose, length, wall thickness, diameter, tip, and top and bottom elevations of temporary or permanent casings. Include anchorage and sealing methods used and condition and weather tightness of splices if any.
12. Description of soil or water movement, sidewall stability, loss of ground, and means of control.
13. Date and time of starting and completing excavation.
14. Inspection report.
15. Condition of reinforcing steel and splices.
16. Position of reinforcing steel.
17. Concrete placing method, including elevation of consolidation and delays.
18. Elevation of concrete during removal of casings.
19. Locations of construction joints.
20. Concrete volume.
21. Concrete testing results.
22. Remarks, unusual conditions encountered, and deviations from requirements.

3.6 DISPOSAL OF SURPLUS AND WASTE MATERIALS

A. Disposal: Remove surplus satisfactory soil and waste material, including unsatisfactory soil, trash, and debris, and legally dispose of it off Owner's property.

END OF SECTION 02466

PART 1 - GENERAL

1.1 RELATED DOCUMENTS

A. Drawings and general provisions of the Contract, including General and Supplementary Conditions and Division 01 Specification Sections, apply to this Section.

1.2 SUMMARY

A. Section Includes:

1. Structural steel.

B. Related Requirements:
1. Section 09911 "Exterior Painting" and Section 09912 "Interior Painting" and Section 09960 "High-Performance Coatings" for surface-preparation and priming requirements.

1.3 DEFINITIONS

A. Structural Steel: Elements of the structural frame indicated on Drawings and as described in AISC 303, "Code of Standard Practice for Steel Buildings and Bridges."

1.4 COORDINATION

A. Coordinate selection of shop primers with topcoats to be applied over them. Comply with paint and coating manufacturers' written recommendations to ensure that shop primers and topcoats are compatible with one another.

B. Coordinate installation of anchorage items to be embedded in or attached to other construction without delaying the Work. Provide setting diagrams, sheet metal templates, instructions, and directions for installation.

1.5 PREINSTALLATION MEETINGS

A. Pre-installation Conference: Conduct conference at Project site.

1.6 ACTION SUBMITTALS

A. Product Data: For each type of product.

B. Shop Drawings: Show fabrication of structural-steel components.

1. Include details of cuts, connections, splices, camber, holes, and other pertinent data.
2. Include embedment Drawings.

3. Indicate welds by standard AWS symbols, distinguishing between shop and field welds, and show size, length, and type of each weld. Show backing bars that are to be removed and supplemental fillet welds where backing bars are to remain.
4. Indicate type, size, and length of bolts, distinguishing between shop and field bolts. Identify pre-tensioned and slip-critical, high-strength bolted connections.

1.7 INFORMATIONAL SUBMITTALS

A. Qualification Data: For Installer fabricator.

B. Welding certificates.

C. Paint Compatibility Certificates: From manufacturers of topcoats applied over shop primers, certifying that shop primers are compatible with topcoats.

D. Mill test reports for structural steel, including chemical and physical properties.

E. Product Test Reports: For the following:

1. Bolts, nuts, and washers including mechanical properties and chemical analysis.
2. Shop primers.

F. Survey of existing conditions.

G. Source quality-control reports.

H. Field quality-control reports.

1.8 QUALITY ASSURANCE

A. Fabricator Qualifications: A qualified fabricator that has prior experience working on a project of this complexity and size with 3 positive references from projects of a similar size or larger utilizing Architecturally Exposed Steel.

B. Installer Qualifications: A qualified installer that has prior experience working on a project of this complexity and size with 3 positive references from projects of a similar size or larger utilizing Architecturally Exposed Steel.

C. Welding Qualifications: Qualify procedures and personnel according to AWS D1.1/D1.1M, "Structural Welding Code - Steel."

D. Comply with applicable provisions of the following specifications and documents:

1. AISC 303.
2. AISC 360.

1.9 DELIVERY, STORAGE, AND HANDLING

A. Store materials to permit easy access for inspection and identification. Keep steel members off ground and spaced by using pallets, dunnage, or other supports and spacers. Protect steel members and packaged materials from corrosion and deterioration.

1. Do not store materials on structure in a manner that might cause distortion, damage, or overload to members or supporting structures. Repair or replace damaged materials or structures as directed.

B. Store fasteners in a protected place in sealed containers with manufacturer's labels intact.

1. Fasteners may be repackaged provided Owner's testing and inspecting agency observes repackaging and seals containers.
2. Clean and re-lubricate bolts and nuts that become dry or rusty before use.
3. Comply with manufacturers' written recommendations for cleaning and lubricating ASTM F 1852 fasteners and for retesting fasteners after lubrication.

PART 2 - PRODUCTS

2.1 STRUCTURAL-STEEL MATERIALS

A. Plate and Bar: ASTM A 36/A 36M.

B. Corrosion-Resisting Structural-Steel Shapes, Plates, and Bars: ASTM A 588/A 588M, Grade 50 (345).

C. Cold-Formed Hollow Structural Sections: ASTM A 500/A 500M, Grade C, structural tubing.

D. Welding Electrodes: Comply with AWS requirements.

E. -stud type, cold-finished

2.2 PRIMER

A. Primer: Comply with Section 09911 "Exterior Painting" Section 09960 "High-Performance Coatings.

2.3 FABRICATION

A. Structural Steel: Fabricate and assemble in shop to greatest extent possible. Fabricate according to AISC 303, "Code of Standard Practice for Steel Buildings and Bridges," and to AISC 360.

1. Camber structural-steel members where indicated.
2. Fabricate beams with rolling camber up.
3. Identify high-strength structural steel according to ASTM A 6/A 6M and maintain markings until structural steel has been erected.
4. Mark and match-mark materials for field assembly.
5. Complete structural-steel assemblies, including welding of units, before starting shop-priming operations.

B. Thermal Cutting: Perform thermal cutting by machine to greatest extent possible.

1. Plane thermally cut edges to be welded to comply with requirements in AWS D1.1/D1.1M.

C. Bolt Holes: Cut, drill, or punch standard bolt holes perpendicular to metal surfaces.

D. Finishing: Accurately finish ends of columns and other members transmitting bearing loads.

E. Cleaning: Clean and prepare steel surfaces that are to remain unpainted according to **SSPC-SP 3, "Power Tool Cleaning."**

F. Holes: Provide holes required for securing other work to structural steel and for other work to pass through steel members.

1. Cut, drill, or punch holes perpendicular to steel surfaces. Do not thermally cut bolt holes or enlarge holes by burning.
2. Weld threaded nuts to framing and other specialty items indicated to receive other work.

2.4 SHOP CONNECTIONS

A. Weld Connections: Comply with AWS D1.1/D1.1M for tolerances, appearances, welding procedure specifications, weld quality, and methods used in correcting welding work.

1. Assemble and weld built-up sections by methods that maintain true alignment of axes without exceeding tolerances in AISC 303 for mill material.

2.5 SHOP PRIMING

A. Shop prime steel surfaces except the following:

1. Surfaces to be field welded.
2. Galvanized surfaces.

B. Surface Preparation: Clean surfaces to be painted. Remove loose rust and mill scale and spatter, slag, or flux deposits. Prepare surfaces according to the following specifications and standards:
1. SSPC-SP 6/NACE No. 3, "Commercial Blast Cleaning."

C. Priming: Immediately after surface preparation, apply primer according to manufacturer's written instructions and at rate recommended by SSPC to provide a minimum dry film thickness of 1.5 mils (0.038 mm). Use priming methods that result in full coverage of joints, corners, edges, and exposed surfaces.

1. Stripe paint corners, crevices, bolts, welds, and sharp edges.
2. Apply two coats of shop paint to surfaces that are inaccessible after assembly or erection. Change color of second coat to distinguish it from first.

2.6 GALVANIZING

A. Hot-Dip Galvanized Finish: Apply zinc coating by the hot-dip process to structural steel according to ASTM A 123/A 123M.

1. Fill vent and drain holes that are exposed in the finished Work unless they function as weep holes, by plugging with zinc solder and filing off smooth.
2. Galvanize **welded embed plates and other items shown in the drawings**.

2.7 SOURCE QUALITY CONTROL

A. Ensure all steel of the same size is sourced from the same mill so there is no variance in size amongst similar members.

PART 3 - EXECUTION

3.1 EXAMINATION

A. Verify, with certified steel erector present, elevations of concrete- and masonry-bearing surfaces and locations of anchor rods, bearing plates, and other embedment's for compliance with requirements.

1. Prepare a certified survey of existing conditions. Include bearing surfaces, anchor rods, bearing plates, and other embedment's showing dimensions, locations, angles, and elevations.

B. Proceed with installation only after unsatisfactory conditions have been corrected.

3.2 ERECTION

A. Set structural steel accurately in locations and to elevations indicated and according to AISC 303 and AISC 360.

B. Maintain erection tolerances of structural steel within AISC 303, "Code of Standard Practice for Steel Buildings and Bridges."

C. Align and adjust various members that form part of complete frame or structure before permanently fastening. Before assembly, clean bearing surfaces and other surfaces that are in permanent contact with members. Perform necessary adjustments to compensate for discrepancies in elevations and alignment.

1. Level and plumb individual members of structure.
2. Make allowances for difference between temperature at time of erection and mean temperature when structure is completed and in service.

D. Splice members only where indicated.

E. Do not use thermal cutting during erection.

F. Do not enlarge unfair holes in members by burning or using drift pins. Ream holes that must be enlarged to admit bolts.

3.3 FIELD CONNECTIONS

A. Weld Connections: Comply with AWS D1.1/D1.1Mfor tolerances, appearances, welding procedure specifications, weld quality, and methods used in correcting welding work.

1. Comply with AISC 303 and AISC 360 for bearing, alignment, adequacy of temporary connections, and removal of paint on surfaces adjacent to field welds.
2. Remove backing bars or runoff tabs, back gouge, and grind steel smooth.

3. Assemble and weld built-up sections by methods that maintain true alignment of axes without exceeding tolerances in AISC 303, "Code of Standard Practice for Steel Buildings and Bridges," for mill material.

3.4 FIELD QUALITY CONTROL

A. Special Inspections: Owner will engage a qualified special inspector to perform the following special inspections:

1. Verify structural-steel materials and inspect steel frame joint details.
2. Verify weld materials and inspect welds.
3.

B. Testing Agency: Owner will engage a qualified testing agency to perform tests and inspections.

C. Welded Connections: Visually inspect field welds according to AWS D1.1/D1.1M.

1. In addition to visual inspection, test and inspect field welds according to AWS D1.1/D1.1M and the following inspection procedures, at testing agency's option:

a. Liquid Penetrant Inspection: ASTM E 165.
b. Magnetic Particle Inspection: ASTM E 709; performed on root pass and on finished weld. Cracks or zones of incomplete fusion or penetration are not accepted.
c. Ultrasonic Inspection: ASTM E 164.
d. Radiographic Inspection: ASTM E 94.

3.5 REPAIRS AND PROTECTION

A. Galvanized Surfaces: Clean areas where galvanizing is damaged or missing and repair galvanizing to comply with ASTM A 780/A 780M.

B. Touchup Priming: Cleaning and touchup priming are specified in Section 09960 "High-Performance Coatings."

END OF SECTION 05120

PART 1 - GENERAL

1.1 RELATED DOCUMENTS

A. Drawings and general provisions of the Contract, including General and Supplementary Conditions and Division 01 Specification Sections, apply to this Section.

1.2 SUMMARY

A. Section includes architecturally exposed structural-steel (AESS).

1. Requirements in Section 05120 "Structural Steel" also apply to AESS.

B. Related Requirements:

1. Section 05120 "Structural Steel" for additional requirements applicable to AESS.
2. Section 09911 "Exterior Painting" and Section 09960 "High-Performance Coatings**"** for surface preparation and priming requirements.

1.3 DEFINITIONS

A. AESS: Structural steel designated as "architecturally exposed structural steel" or "AESS" in the Contract Documents.

B. Category 1 AESS: AESS that is within 96 inches (2400 mm) vertically and 36 inches (900 mm) horizontally of a walking surface and that is visible to a person standing on that walking surface or is designated as "Category 1 architecturally exposed structural steel" or "AESS-1" in the Contract Documents.

C. Category 2 AESS: AESS that is within 20 feet (6 m) vertically and horizontally of a walking surface and that is visible to a person standing on that walking surface or is designated as "Category 2 architecturally exposed structural steel" or "AESS-2" in the Contract Documents.

1.4 COORDINATION

A. Coordinate selection of shop primers with topcoats to be applied over them. Comply with paint and coating manufacturers' written recommendations to ensure that shop primers and topcoats are compatible with one another.

1.5 PREINSTALLATION MEETINGS

A. Pre-installation Conference: Conduct conference at Project site.

1.6 ACTION SUBMITTALS

A. Shop Drawings: Show fabrication of AESS components. Shop Drawings for structural steel may be used for AESS provided items of AESS are specifically identified and requirements below are met for AESS.

1. Include details of cuts, connections, splices, camber, holes, and other pertinent data.
2. Include embedment Drawings.
3. Indicate welds by standard AWS symbols, distinguishing between shop and field welds, and show size, length, and type of each weld. Show backing bars that are to be removed and supplemental fillet welds where backing bars are to remain. Indicate grinding, finish, and profile of welds.
4. Indicate exposed surfaces and edges and surface preparation being used.
5. Indicate special tolerances and erection requirements.

B. Samples: Submit Samples of AESS to set quality standards for exposed welds **for** Category 1 AESS.

1. Round steel tube or pipe, minimum 4 inches (200 mm) in diameter, with end of another round steel tube or pipe, approximately 2 inches (100 mm) in diameter, welded to its side at a 45-degree angle with a continuous fillet weld and with weld ground smooth and blended.

1.7 INFORMATIONAL SUBMITTALS

A. Qualification Data: For Installer fabricator.

B. Paint Compatibility Certificates: From manufacturers of topcoats applied over shop primers, certifying that shop primers are compatible with topcoats.

1.8 QUALITY ASSURANCE

A. Fabricator Qualifications: A qualified fabricator that has prior experience working on a project of this complexity and size with 3 positive references from projects of a similar size or larger utilizing Architecturally Exposed Steel.

B. Installer Qualifications: A qualified installer that has prior experience working on a project of this complexity and size with 3 positive references from projects of a similar size or larger utilizing Architecturally Exposed Steel.

C. Mockups: Build mockups of AESS to set quality standards for fabrication and installation.

1. Build mockup of typical portion of AESS as shown on Drawings.
2. Coordinate painting requirements with Section 09911 "Exterior Painting".
3. Coordinate high-performance coatings requirements with Section 09960 "High-Performance Coatings."

1.9 DELIVERY, STORAGE, AND HANDLING

A. Use special care in handling to prevent twisting, warping, nicking, and other damage. Store materials to permit easy access for inspection and identification. Keep steel members off

ground and spaced by using pallets, dunnage, or other supports and spacers. Protect steel members and packaged materials from corrosion and deterioration.

1. Do not store materials on structure in a manner that might cause distortion, damage, or overload to members or supporting structures. Repair or replace damaged materials or structures as directed.

1.10 FIELD CONDITIONS

A. Field Measurements: Where AESS is indicated to fit against other construction, verify actual dimensions by field measurements before fabrication.

PART 2 - PRODUCTS

2.1 FILLER

A. Filler: Polyester filler intended for use in repairing dents in automobile bodies.

2.2 PRIMER

A. Primer: Comply with Section 09911 "Exterior Painting," and Section 09960 "High-Performance Coatings."

2.3 FABRICATION

A. Shop fabricate and assemble AESS to the maximum extent possible. Locate field joints at concealed locations if possible. Detail assemblies to minimize handling and to expedite erection.

B. In addition to special care used to handle and fabricate AESS, comply with the following:

1. Fabricate with exposed surfaces smooth, square, and free of surface blemishes including pitting, rust, scale, and roughness.
2. Grind sheared, punched, and flame-cut edges of Category 1 AESS to remove burrs and provide smooth surfaces and edges.
3. Fabricate Category 1 AESS with exposed surfaces free of mill marks, including rolled trade names and stamped or raised identification.
4. Fabricate Category 1 and Category 2 AESS with exposed surfaces free of seams to maximum extent possible.
5. Remove blemishes by filling or grinding or by welding and grinding, before cleaning, treating, and shop priming.
6. Fabricate with piece marks fully hidden in the completed structure or made with media that permits full removal after erection.
7. Fabricate Category 1 AESS to the tolerances specified in AISC 303 for steel that is designated AESS.
8. Fabricate Category 2 AESS to the tolerances specified in AISC 303 for steel that is not designated AESS.
9. Seal-weld open ends of hollow structural sections with 3/8-inch (9.5-mm) closure plates for Category 1 and Category 2 AESS.

C. Curved Members: Fabricate indicated members to curved shape by rolling to final shape in fabrication shop.

1. Distortion of webs, stems, outstanding flanges, and legs of angles shall not be visible from a distance of 20 feet (6 m) under any lighting conditions.
2. Tolerances for walls of hollow steel sections after rolling shall be approximately 1/2 inch (13 mm).

D. Coping, Blocking, and Joint Gaps: Maintain uniform gaps of 1/8 inch (3.2 mm) with a tolerance of 1/32 inch (0.8 mm) for Category 1 AESS.

E. Bolt Holes: Cut, drill, or punch standard bolt holes perpendicular to metal surfaces.

F. Holes: Provide holes required for securing other work to structural steel and for other work to pass through steel members.

1. Cut, drill, or punch holes perpendicular to steel surfaces. Do not thermally cut bolt holes or enlarge holes by burning.
2. Weld threaded nuts to framing and other specialty items indicated to receive other work.

2.4 SHOP CONNECTIONS

A. Weld Connections: Comply with AWS D1.1/D1.1M for tolerances, appearances, welding procedure specifications, weld quality, and methods used in correcting welding work, and comply with the following:

1. Assemble and weld built-up sections by methods that will maintain true alignment of axes without exceeding specified tolerances.
2. Use weld sizes, fabrication sequence, and equipment for AESS that limit distortions to allowable tolerances.
3. Provide continuous welds of uniform size and profile where Category 1 AESS is welded.
4. Grind butt and groove welds flush to adjacent surfaces within tolerance of plus 1/16 inch, minus zero inch (plus 1.5 mm, minus zero mm) for Category 1 and Category 2 AESS.
5. Remove backing bars or runoff tabs; back-gouge and grind steel smooth for Category 1 and Category 2 AESS.
6. At locations where welding on the far side of an exposed connection of Category 1 and Category 2 AESS occurs, grind distortions and marking of the steel to a smooth profile aligned with adjacent material.
7. Make fillet welds for Category 1 and Category 2, AESS oversize and grind to uniform profile with smooth face and transition.

2.5 SHOP PRIMING

A. Shop prime steel surfaces except the following:

1. Surfaces embedded in concrete or mortar. Extend priming of partially embedded members to a depth of 2 inches (50 mm).
2. Surfaces to be field welded.

B. Surface Preparation **Clean** surfaces to be painted. Remove loose rust and mill scale and spatter, slag, or flux deposits. Prepare surfaces according to the following specifications and standards:
1. SSPC-SP 6/NACE No. 3, "Commercial Blast Cleaning."

C. Priming: Immediately after surface preparation, apply primer according to manufacturer's written instructions and at rate recommended by SSPC to provide a minimum dry film thickness of 1.5 mils (0.038 mm). Use priming methods that result in full coverage of joints, corners, edges, and exposed surfaces.

1. Stripe paint corners, crevices, bolts, welds, and sharp edges.
2. Apply two coats of shop paint to surfaces that are inaccessible after assembly or erection. Change color of second coat to distinguish it from first.

PART 3 - EXECUTION

3.1 EXAMINATION

A. Verify, with steel erector present, elevations of concrete- and masonry-bearing surfaces and locations of anchor rods, bearing plates, and other embedment's for compliance with requirements.

1. Prepare a certified survey of bearing surfaces, anchor rods, bearing plates, and other embedment's showing dimensions, locations, angles, and elevations.

B. Examine AESS for twists, kinks, warping, gouges, and other imperfections before erecting.

C. Proceed with installation only after unsatisfactory conditions have been corrected.

3.2 ERECTION

A. Set AESS accurately in locations and to elevations indicated and according to AISC 303 and AISC 360.

1. Erect Category 1 and Category 2**,** AESS to the tolerances specified in AISC 303 for steel that is designated AESS.

B. Do not use thermal cutting during erection by Architect. Finish thermally.

3.3 FIELD CONNECTIONS

A. Weld Connections: Comply with requirements in "Weld Connections" Paragraph in "Shop Connections" Article.

1. Remove backing bars or runoff tabs; back-gouge and grind steel smooth for Category 1 and Category 2, AESS.
2. Remove erection bolts in Category 1 and Category 2, AESS, fill holes, and grind smooth.
3. Fill weld access holes in Category 1 and Category 2, AESS and grind smooth.

3.4 FIELD QUALITY CONTROL

A. Testing Agency: Owner will engage a qualified independent testing and inspecting agency to inspect AESS as specified in Section 05120 "Structural Steel." The testing agency is not responsible for enforcing requirements relating to aesthetic effect.

B. Architect will observe AESS in place to determine acceptability relating to aesthetic effect.

3.5 REPAIRS AND PROTECTION

A. Remove welded tabs that were used for attaching temporary bracing and safety cabling and that are exposed to view in the completed Work. Grind steel smooth.

B. Touchup Painting: Immediately after erection, clean field welds, bolted connections, and abraded areas of shop paint, and paint exposed areas with the same material as used for shop painting to comply with SSPC-PA 1 for touching up shop-painted surfaces.

1. Clean and prepare surfaces by SSPC-SP 2 hand-tool cleaning or SSPC-SP 3 power-tool cleaning.

C. Touchup Priming: Cleaning and touchup priming are specified in Section 09960 "High-Performance Coatings."

END OF SECTION 05121

PART 1 - GENERAL

1.1 RELATED DOCUMENTS

A. Drawings and general provisions of the Contract, including General and Supplementary Conditions and Division 01 Specification Sections, apply to this Section.

1.2 SUMMARY

A. Section Includes:

1. Beam wraps.
2. Closures and trim.
3. Decorative-metal-clad, hollow-metal doors and frames.
4. Escalator enclosures.
5. Filler panels
6. Lighting coves.
7. Metal base.
8. Mullion cladding.
9. Pipe system covers.
10. Pockets for window treatment.
11. Window stools.
12. Exterior fins.
13. Exterior formed-metal-shaped panels.
14. Exterior sunshades.
15. Exterior trellises.
16. Exterior window covers.
17. Metal shapes as part of roof construction.

1.3 COORDINATION

A. Coordinate installation of anchorages for decorative formed metal items. Furnish setting drawings, templates, and directions for installing anchorages, including sleeves, concrete inserts, anchor bolts, and items with integral anchors, that are to be embedded in concrete or masonry. Deliver items to Project site in time for installation.

B. Coordinate installation of decorative formed metal with adjacent construction to ensure that wall assemblies, flashings, trim, and joint sealants, are protected against damage from the effects of weather, age, corrosion, and other causes of deterioration.

1.4 PREINSTALLATION MEETINGS

A. Preinstallation Conference: Conduct conference at Project site.

1.5 ACTION SUBMITTALS

A. Product Data: For each type of product, including finishing materials.

B. Shop Drawings: Show fabrication and installation details for decorative formed metal.

1. Include plans, elevations, component details, and attachment details.
2. Indicate materials and profiles of each decorative formed metal member, fittings, joinery, finishes, fasteners, anchorages, and accessory items.

C. Samples for Initial Selection: For products involving selection of color, texture, or design, including mechanical finishes.

D. Samples for Verification: For each type of exposed finish required, prepared on 6-inch- (150-mm-) square Samples of metal of same thickness and material indicated for the Work.

E. Delegated-Design Submittal: For installed products indicated to comply with performance requirements and design criteria, including analysis data signed and sealed by the qualified professional engineer responsible for their preparation.

1.6 INFORMATIONAL SUBMITTALS

A. Coordination Drawings: For decorative formed metal elements that house items specified in other Sections. Show dimensions of housed items, including locations of housing penetrations and attachments, and necessary clearances.

B. Qualification Data: For Installer fabricator organic-coating applicator and professional engineer.

C. Mill Certificates: Signed by stainless-steel manufacturers certifying that products furnished comply with requirements.

D. Evaluation Reports: For post-installed anchors, from ICC-ES.

1.7 CLOSEOUT SUBMITTALS

A. Maintenance Data: For mirrorlike stainless-steel finish to include in maintenance manuals.

1.8 QUALITY ASSURANCE

A. Fabricator Qualifications: A firm experienced in producing decorative formed metal similar to that indicated for this Project and with a record of successful in-service performance as well as sufficient production capacity to produce required units.

B. Organic-Coating Applicator Qualifications: A firm experienced in successfully applying organic coatings of type indicated to metals of types indicated and that employs competent control personnel to conduct continuing, effective quality-control program to ensure compliance with requirements.

C. Anodic Finisher Qualifications: A firm experienced in successfully applying anodic finishes of type indicated and that employs competent control personnel to conduct continuing, effective quality-control program to ensure compliance with requirements.

D. Powder-Coating Applicator Qualifications: A firm experienced in successfully applying powder coatings of type indicated to metals of types indicated and that employs competent control personnel to conduct continuing, effective quality-control program to ensure compliance with requirements.

E. Installer Qualifications: Fabricator of products.

F. Mockups: Build mockups to verify selections made under Sample submittals, to demonstrate aesthetic effects, and to set quality standards for fabrication and installation.

1. Subject to compliance with requirements, approved mockups may become part of the completed Work if undisturbed at time of Substantial Completion.

1.9 DELIVERY, STORAGE, AND HANDLING

A. Deliver decorative formed metal products wrapped in protective coverings and strapped together in suitable packs or in heavy-duty cartons. Remove protective coverings before they stain or bond to finished surfaces.

B. Store products on elevated platforms in a dry location.

1.10 FIELD CONDITIONS

A. Field Measurements: Verify actual locations of walls, columns, beams, and other construction contiguous with decorative formed metal by field measurements before fabrication and indicate measurements on Shop Drawings.

PART 2 - PRODUCTS

2.1 PERFORMANCE REQUIREMENTS

A. Delegated Design: Engage a qualified professional engineer, as defined in Section 01400"Quality Requirements," to design decorative formed metal, including attachment to building construction.

B. Structural Performance: Decorative formed metal items, including anchors and connections, shall withstand the effects of gravity loads and the following loads and stresses without exceeding the allowable design working stress of materials involved and without exhibiting permanent deformation in any components:

1. Wind Loads on Exterior Items: As indicated on Drawings.

C. Seismic Performance: Exterior decorative formed metal items, including anchors and connections, shall withstand the effects of earthquake motions determined according to ASCE/SEI 7.

1. Component Importance Factor: 1.0.

D. Thermal Movements: Allow for thermal movements from ambient and surface temperature changes acting on exterior metal fabrications by preventing buckling, opening of joints, overstressing of components, failure of connections, and other detrimental effects.

1. Temperature Change: 120 deg F (67 deg C), ambient; 180 deg F (100 deg C), material surfaces.

2.2 SHEET METAL

A. General: Fabricate products from sheet metal without pitting, seam marks, roller marks, stains, discolorations, or other imperfections where exposed to view on finished units.

B. Recycled Content of Steel Products: Postconsumer recycled content plus one-half of preconsumer recycled content not less than 25 percent.

C. Aluminum Sheet: Flat sheet complying with ASTM B 209 (ASTM B 209M), alloy and temper recommended by aluminum producer and finisher for type of use and finish indicated, and with strength and durability properties of not less than Alloy 5005-H32.

D. Galvanized-Steel Sheet: ASTM A 653/A 653M, G90 (Z275) coating, either commercial steel or forming steel.

E. Steel Sheet: Uncoated, cold-rolled, ASTM A 1008/A 1008M, commercial steel, exposed.

F. Stainless-Steel Sheet: ASTM A 240/A 240M or ASTM A 666, Type 304, stretcher-leveled standard of flatness.

G. Bronze Sheet: ASTM B 36/B 36M, Alloy UNS C28000 (muntz metal, 60 percent copper) or Alloy UNS C23000 (red brass, 85 percent copper).

H. Brass Sheet: ASTM B 36/B 36M, Alloy UNS C26000 (cartridge brass, 70 percent copper).

I. Copper Sheet: ASTM B 370, cold-rolled copper sheet, H00 temper.

J. Titanium Sheet: ASTM B 265, Grade 1.

2.3 MISCELLANEOUS MATERIALS

A. Gaskets: As required to seal joints in decorative formed metal and remain weathertight; as recommended in writing by decorative formed metal manufacturer.

1. ASTM D 1056, Type 1, Class A, grade as recommended by gasket manufacturer to obtain seal for application indicated.
2. Closed-cell polyurethane foam, adhesive on two sides, release paper protected.

B. Sealants, Exterior: ASTM C 920; elastomeric silicone sealant; of type, grade, class, and use classifications required to seal joints in decorative formed metal and remain weathertight; and as recommended in writing by decorative formed metal manufacturer.

C. Sealants, Interior: Nonsag, paintable, nonstaining, latex sealant complying with ASTM C 834; of type and grade required to seal joints in decorative formed metal; and as recommended in writing by decorative formed metal manufacturer.

1. Sealants shall have a VOC content of not more than 250 g/L when calculated according to 40 CFR 59, Subpart D (EPA Method 24).
2. Sealants shall comply with the testing and product requirements of the California Department of Public Health's (formerly, the California Department of Health Services') "Standard Method for the Testing and Evaluation of Volatile Organic Chemical Emissions from Indoor Sources Using Environmental Chambers."

D. Filler Metal and Electrodes: Provide type and alloy of filler metal and electrodes as recommended by producer of metal to be welded or brazed and as necessary for strength, corrosion resistance, and compatibility in fabricated items.

1. Use filler metals that will match the color of metal being joined and will not cause discoloration.

E. Fasteners: Fabricated from same basic metal and alloy as fastened metal unless otherwise indicated. Do not use metals that are incompatible with materials joined.

1. Provide concealed fasteners for interconnecting decorative formed metal items and for attaching them to other work unless otherwise indicated.
2. Provide tamper-resistant flat-head machine screws for exposed fasteners unless otherwise indicated.

F. Structural Anchors: For applications indicated to comply with certain design loads, provide fastener systems with working capacity greater than or equal to the design load, according to an evaluation report acceptable to authorities having jurisdiction, based on ICC-ES AC193.

G. Nonstructural Anchors: For applications not indicated to comply with design loads, provide fastener systems with an evaluation report acceptable to authorities having jurisdiction, based on ICC-ES AC193.

H. Anchor Materials:

1. Material for Interior Locations: Carbon-steel components zinc plated to comply with ASTM B 633 or ASTM F 1941 (ASTM F 1941M), Class Fe/Zn 5, unless otherwise indicated.
2. Material for Exterior Locations and Where Stainless Steel Is Indicated: Alloy [Group 1 (A1)] [Group 2 (A4)] stainless-steel bolts, ASTM F 593 (ASTM F 738M), and nuts, ASTM F 594 (ASTM F 836M).

I. Sound-Deadening Materials:

1. Insulation: Unfaced, mineral-fiber blanket insulation complying with ASTM C 665, Type I, and passing ASTM E 136 test.

2. Mastic: Cold-applied asphalt emulsion complying with ASTM D 1187/D 1187M.

J. Backing Materials: Provided or recommended by decorative formed metal manufacturer.

K. Laminating Adhesive: Adhesive recommended by metal fabricator that will fully bond metal to metal, will prevent telegraphing and oil-canning, and is compatible with substrate and noncombustible after curing.

1. Contact Adhesive: VOC content of not more than 80 g/L when calculated according to 40 CFR 59, Subpart D (EPA Method 24).
2. Metal-to-Metal Adhesive: VOC content of not more than 30 g/L when calculated according to 40 CFR 59, Subpart D (EPA Method 24).
3. Multipurpose Construction Adhesive: VOC content of not more than 70 g/L when calculated according to 40 CFR 59, Subpart D (EPA Method 24).
4. Special-Purpose Contact Adhesive: (Contact adhesive used to bond melamine-covered board, metal, unsupported vinyl, ultrahigh molecular weight polyethylene, and rubber or wood veneer, 1/16 inch thick or less, to any surface): 250 g/L.
5. Adhesive shall comply with the testing and product requirements of the California Department of Public Health's (formerly, the California Department of Health Services') "Standard Method for the Testing and Evaluation of Volatile Organic Chemical Emissions from Indoor Sources Using Environmental Chambers."

L. Isolation Coating: Manufacturer's standard alkali-resistant coating.

1. Coating shall comply with the testing and product requirements of the California Department of Public Health's (formerly, the California Department of Health Services') "Standard Method for the Testing and Evaluation of Volatile Organic Chemical Emissions from Indoor Sources Using Environmental Chambers."

2.4 PAINTS AND COATINGS

A. Low-Emitting Materials: Paints and coatings applied to interior decorative formed metal items shall comply with the testing and product requirements of the California Department of Public Health's (formerly, the California Department of Health Services') "Standard Method for the Testing and Evaluation of Volatile Organic Chemical Emissions from Indoor Sources Using Environmental Chambers."

B. Etching Cleaner for Galvanized Metal: Complying with MPI#25.

C. Galvanizing Repair Paint: High-zinc-dust-content paint complying with SSPC-Paint 20 and compatible with paints specified to be used over it.

D. Lacquer for Copper Alloys: Clear, acrylic lacquer specially developed for coating copper-alloy products.

E. Shop Primers: Comply with Section 09911 "Exterior Painting." and Section 09960 "High-Performance Coatings."

F. Universal Shop Primer for Ferrous Metal: Fast-curing, lead- and chromate-free, universal modified-alkyd primer complying with MPI#79 and compatible with topcoat.

1. Use primer containing pigments that make it easily distinguishable from zinc-rich primer.

G. Epoxy Zinc-Rich Primer: Complying with MPI#20 and compatible with topcoat.

H. Bituminous Paint: Cold-applied asphalt emulsion complying with ASTM D 1187/D 1187M.

2.5 FABRICATION, GENERAL

A. Shop Assembly: Preassemble decorative formed metal items in shop to greatest extent possible to minimize field splicing and assembly. Disassemble units only as necessary for shipping and handling limitations. Clearly mark units for reassembly and coordinated installation.

B. Coordinate dimensions and attachment methods of decorative formed metal items with those of adjoining construction to produce integrated assemblies with closely fitting joints and with edges and surfaces aligned unless otherwise indicated.

C. Form metal to profiles indicated, in maximum lengths to minimize joints. Produce flat, flush surfaces without cracking or grain separation at bends. Fold back exposed edges of unsupported sheet metal to form a 1/2-inch- (12-mm-) wide hem on the concealed side, or ease edges to a radius of approximately 1/32 inch (1 mm) and support with concealed stiffeners.

D. Increase metal thickness or reinforce with concealed stiffeners, backing materials, or both, as needed to provide surface flatness equivalent to stretcher-leveled standard of flatness and sufficient strength for indicated use.

1. Support joints with concealed stiffeners as needed to hold exposed faces of adjoining sheets in flush alignment.

E. Build in straps, plates, and brackets as needed to support and anchor fabricated items to adjoining construction. Reinforce decorative formed metal items as needed to attach and support other construction.

F. Provide support framing, mounting and attachment clips, splice sleeves, fasteners, and accessories needed to install decorative formed metal items.

G. Where welding or brazing is indicated, weld or braze joints and seams continuously. Grind, fill, and dress to produce smooth, flush, exposed surfaces in which joints are not visible after finishing is completed.

1. Use welding and brazing procedures that will blend with and not cause discoloration of metal being joined.

2.6 CLOSURES AND TRIM

A. Form closures and trim from metal of type and thickness indicated below. Fabricate to fit tightly to adjoining construction, with weathertight joints at exterior installations.

1. Aluminum Sheet: Thickness required to comply with performance requirements.

a. Finish: High-performance organic coating.

2. Galvanized-Steel Sheet: Thickness required to comply with performance requirements.

a. Finish: High-performance organic coating.

3. Steel Sheet: Thickness required to comply with performance requirements.

a. Finish: Powder coat.

4. Closures and trim may be fabricated from prefinished metal sheet in lieu of finishing after fabrication provided unfinished edges are concealed from view and not exposed to weather.

B. Conceal fasteners where possible; otherwise, locate where they are as inconspicuous as possible. Size fasteners to support closures and trim, with fasteners spaced to prevent buckling or waviness in finished surfaces.

C. Drill and tap holes needed for securing closures and trim to other surfaces.

D. Incorporate gaskets where indicated or needed for concealed, continuous seal at abutting surfaces.

E. Miter or cope trim members at corners and reinforce with bent metal splice plates to form tight joints.

2.7 GENERAL FINISH REQUIREMENTS

A. Complete mechanical finishes of flat sheet metal surfaces before fabrication where possible. After fabrication, finish all joints, bends, abrasions, and other surface blemishes to match sheet finish.

B. Protect mechanical finishes on exposed surfaces from damage by applying a strippable, temporary protective covering before shipping.

C. Apply organic and anodic finishes to formed metal after fabrication unless otherwise indicated.

D. Finish items indicated on Drawings after assembly.

E. Appearance of Finished Work: Variations in appearance of abutting or adjacent pieces are acceptable if they are within one-half of the range of approved Samples. Noticeable variations in the same piece are not acceptable. Variations in appearance of other components are acceptable if they are within the range of approved Samples and are assembled or installed to minimize contrast.

2.8 ALUMINUM FINISHES

A. Clear Anodic Finish: AAMA 611, AA-M12C22A41, Class I, 0.018 mm or thicker.

B. Color Anodic Finish: AAMA 611, AA-M12C22A42/A44, Class I, 0.018 mm or thicker.

1. Color: As selected by Architect from full range of industry colors and color densities.

C. Baked-Enamel or Powder-Coat Finish: AAMA 2603 except with a minimum dry film thickness of 1.5 mils (0.04 mm). Comply with coating manufacturer's written instructions for cleaning, conversion coating, and applying and baking finish.

1. Color and Gloss: As selected by Architect from manufacturer's full range.

D. Siliconized Polyester Finish: Epoxy primer and silicone-modified, polyester-enamel topcoat; with a dry film thickness of not less than 0.2 mil (0.005 mm) for primer and 0.8 mil (0.02 mm) for topcoat.

1. Color and Gloss: As selected by Architect from manufacturer's full range.

E. High-Performance Organic Finish: Two-coat fluoropolymer finish complying with AAMA 2604 and containing not less than 50 percent PVDF resin by weight in color coat. Prepare, pretreat, and apply coating to exposed metal surfaces to comply with coating and resin manufacturers' written instructions.

1. Color and Gloss: As selected by Architect from manufacturer's full range.

F. High-Performance Organic Finish: Four-coat fluoropolymer finish complying with AAMA 2605 and containing not less than 50 percent PVDF resin by weight in both color coat and clear topcoat. Prepare, pretreat, and apply coating to exposed metal surfaces to comply with coating and resin manufacturers' written instructions.

1. Color and Gloss: As selected by Architect from manufacturer's full range.

2.9 GALVANIZED-STEEL SHEET FINISHES

A. Preparing Galvanized Items for Factory Priming: Thoroughly clean galvanized decorative formed metal of grease, dirt, oil, flux, and other foreign matter, and treat with etching cleaner.

B. Preparing Galvanized Items for Factory Finishing: Clean surfaces with nonpetroleum solvent so surfaces are free of oil and other contaminants. After cleaning, apply a conversion coating suited to the organic coating to be applied over it.

C. Repairing Galvanized Surfaces: Clean welds and abraded areas and repair galvanizing to comply with ASTM A 780/A 780M.

D. Factory Priming for Field-Painted Finish: Where field painting after installation is indicated, apply shop primer to prepared surfaces of items unless otherwise indicated. Comply with requirements in SSPC-PA 1, "Paint Application Specification No. 1: Shop, Field, and Maintenance Painting of Steel," for shop painting.

E. Baked-Enamel Finish: Immediately after cleaning and pretreating, apply manufacturer's standard two-coat, baked-enamel finish consisting of prime coat and thermosetting topcoat, with a minimum dry film thickness of 1 mil (0.025 mm) for topcoat. Comply with paint manufacturer's written instructions for applying and baking to achieve a minimum dry film thickness of 2 mils (0.05 mm).

1. Color and Gloss: As selected by Architect from manufacturer's full range.

F. Powder-Coat Finish: Immediately after cleaning and pretreating, apply manufacturer's standard thermosetting polyester or acrylic urethane powder coating with cured-film thickness not less than 1.5 mils (0.04 mm). Prepare, treat, and coat metal to comply with resin manufacturer's written instructions.

1. Color and Gloss: As selected by Architect from manufacturer's full range.

G. Siliconized-Polyester Coating: Immediately after cleaning and pretreating, apply manufacturer's standard epoxy primer and silicone-modified, polyester-enamel topcoat; with a dry film thickness of not less than 0.2 mil (0.005 mm) for primer and 0.8 mil (0.02 mm) for topcoat.

1. Color and Gloss: As selected by Architect from manufacturer's full range.

H. High-Performance Organic Finish: Two-coat fluoropolymer finish complying with AAMA 2604 and containing not less than 50 percent PVDF resin by weight in color coat. Prepare, pretreat, and apply coating to exposed metal surfaces to comply with coating and resin manufacturers' written instructions.

1. Color and Gloss: As selected by Architect from manufacturer's full range.

I. High-Performance Organic Finish: Four-coat fluoropolymer finish complying with AAMA 2605 and containing not less than 50 percent PVDF resin by weight in both color coat and clear topcoat. Prepare, pretreat, and apply coating to exposed metal surfaces to comply with coating and resin manufacturers' written instructions.

1. Color and Gloss: As selected by Architect from manufacturer's full range.

2.10 STEEL SHEET FINISHES

A. Surface Preparation: Clean surfaces to comply with SSPC-SP 1, "Solvent Cleaning," to remove dirt, oil, grease, or other contaminants that could impair paint bond. Remove mill scale and rust, if present, from uncoated steel, complying with SSPC-SP 5/NACE No. 1, "White Metal Blast Cleaning," or with SSPC-SP 8, "Pickling."

B. Pretreatment: Immediately after cleaning, apply a conversion coating of type suited to organic coating.

C. Factory Priming for Field-Painted Finish: Where field painting after installation is indicated, apply shop primer to prepared surfaces of items unless otherwise indicated. Comply with requirements in SSPC-PA 1, "Paint Application Specification No. 1: Shop, Field, and Maintenance Painting of Steel," for shop painting.

D. Baked-Enamel Finish: Immediately after cleaning and pretreating, apply manufacturer's standard two-coat, baked-enamel finish consisting of prime coat and thermosetting topcoat. Comply with coating manufacturer's written instructions for applying and baking to achieve a minimum dry film thickness of 2 mils (0.05 mm).

1. Color and Gloss: As selected by Architect from manufacturer's full range.

E. Powder-Coat Finish: Immediately after cleaning and pretreating, apply manufacturer's standard thermosetting polyester or acrylic urethane powder coating with cured-film thickness not less than 1.5 mils (0.04 mm). Prepare, treat, and coat metal to comply with resin manufacturer's written instructions.

1. Color and Gloss: As indicated by manufacturer's designations.

2.11 STAINLESS-STEEL FINISHES

A. Surface Preparation: Remove tool and die marks and stretch lines, or blend into finish.

B. Polished Finishes: Grind and polish surfaces to produce uniform finish, free of cross scratches.

1. Run grain of directional finishes with long dimension of each piece.

C. Bright, Cold-Rolled, Unpolished Finish: No. 2B.

D. Directional Satin Finish: No. 4.

E. Dull Satin Finish: No. 6.

F. Satin, Reflective, Directional Polish: No. 7.

G. Mirrorlike Reflective, Nondirectional Polish: No. 8 finish.

H. When polishing is completed, passivate and rinse surfaces. Remove embedded foreign matter and leave surfaces chemically clean.

2.12 COPPER-ALLOY FINISHES

A. Buffed Finish, Lacquered: M21-O6x (Mechanical Finish: buffed, smooth specular; Coating: clear, organic, air dried, as specified below).

1. Clear, Organic Coating: Lacquer specified for copper alloys, applied by air spray in two coats per manufacturer's written instructions, with interim drying, to a total thickness of 1 mil (0.025 mm).

B. Hand-Rubbed Finish, Lacquered: M31-M34-O6x (Mechanical Finish: directionally textured, fine satin; Mechanical Finish: directionally textured, hand rubbed; Coating: clear, organic, air dried, as specified below).

1. Clear, Organic Coating: Lacquer specified for copper alloys, applied by air spray in two coats per manufacturer's written instructions, with interim drying, to a total thickness of 1 mil (0.025 mm).

C. Medium-Satin Finish, Lacquered: M32-O6x (Mechanical Finish: directionally textured, medium satin; Coating: clear, organic, air dried, as specified below).

1. Clear, Organic Coating: Lacquer specified for copper alloys, applied by air spray in two coats per manufacturer's written instructions, with interim drying, to a total thickness of 1 mil (0.025 mm).

D. Fine-Matte Finish, Lacquered: M42-O6x (Mechanical Finish: nondirectional finish, fine matte; Coating: clear, organic, air dried, as specified below).

1. Clear, Organic Coating: Lacquer specified for copper alloys, applied by air spray in two coats per manufacturer's written instructions, with interim drying, to a total thickness of 1 mil (0.025 mm).

E. Statuary Conversion Coating over Satin Finish: M31-C55 (Mechanical Finish: directionally textured, fine satin; Chemical Finish: conversion coating, sulfide), with color matching Architect's sample.

F. Statuary Conversion Coating over Satin Finish, Lacquered: M31-C55-O6x (Mechanical Finish: directionally textured, fine satin; Chemical Finish: conversion coating, sulfide; Coating: clear, organic, air dried, as specified below), with color matching Architect's sample:

1. Clear, Organic Coating: Lacquer specified for copper alloys, applied by air spray in two coats per manufacturer's written instructions, with interim drying, to a total thickness of 1 mil (0.025 mm).

2.13 TITANIUM FINISHES

A. General: Fabricate items from finished titanium sheet, taking care not to damage finish during fabrication. Protect finish as needed during fabrication by applying a strippable, temporary protective covering.

B. Dull Matte Finish: Pickled and annealed.

C. Bright Matte Finish: Vacuum annealed.

PART 3 - EXECUTION

3.1 EXAMINATION

A. Examine substrates, areas, and conditions, with Installer present, for compliance with requirements for installation tolerances and other conditions affecting performance of decorative formed metal.

B. Proceed with installation only after unsatisfactory conditions have been corrected.

3.2 INSTALLATION

A. Locate and place decorative formed metal items level and plumb and in alignment with adjacent construction. Perform cutting, drilling, and fitting required to install decorative formed metal.

1. Do not cut or abrade finishes that cannot be completely restored in the field. Return items with such finishes to the shop for required alterations, followed by complete refinishing, or provide new units as required.

B. Use concealed anchorages where possible. Provide brass or lead washers fitted to screws where needed to protect metal surfaces and to make a weathertight connection.

C. Form tight joints with exposed connections accurately fitted together. Provide reveals and openings for sealants and joint fillers as indicated.

D. Install concealed gaskets, joint fillers, insulation, sealants, and flashings, as the Work progresses, to make exterior decorative formed metal items weatherproof.

E. Install concealed gaskets, joint fillers, sealants, and insulation, as the Work progresses, to make interior decorative formed metal items soundproof or lightproof as applicable to type of fabrication indicated.

F. Corrosion Protection: Apply bituminous paint or other permanent separation materials on concealed surfaces where metals would otherwise be in direct contact with substrate materials that are incompatible or could result in corrosion or deterioration of either material or finish.

G. Install decorative-formed-metal-clad doors and frames to comply with requirements specified in Section 08110 "Steel Doors and Frames."

3.3 ADJUSTING AND CLEANING

A. Unless otherwise indicated, clean metals by washing thoroughly with water and soap, rinsing with clean water, and drying with soft cloths.

B. Clean copper alloys according to metal finisher's written instructions in a manner that leaves an undamaged and uniform finish matching approved Sample.

C. Touchup Painting: Immediately after erection, clean field welds, bolted connections, and abraded areas of shop paint and paint exposed areas with the same material as used for shop painting to comply with SSPC-PA 1 for touching up shop-painted surfaces.

1. Apply by brush or spray to provide a minimum 2.0-mil (0.05-mm) dry film thickness.

D. Touchup Painting: Cleaning and touchup painting of field welds, bolted connections, and abraded areas of shop paint are specified in Section 09911 "Exterior Painting" and Section 09960 "High-Performance Coatings”.

E. Restore finishes damaged during installation and construction period so no evidence remains of correction work. Return items that cannot be refinished in the field to the shop; make required alterations and refinish entire unit or provide new units.

3.4 PROTECTION

A. Protect finishes of decorative formed metal items from damage during construction period. Remove temporary protective coverings at time of Substantial Completion.

END OF SECTION 05730

PART 1 - GENERAL

1.1 RELATED DOCUMENTS

A. Drawings and general provisions of the Contract, including General and Supplementary Conditions and other Division 1 Specification sections, apply to this Section.

1.2 SUMMARY

A. This Section includes the Plastic Fabrication as shown and specified in the described system(s):

1. Bus Shelters

B. The extent of Solid Polymer Fabrication is shown on the drawings.

1. Additional fabrication and installation details can be found on the Acrylic Panel Partner Preliminary Project Review, if applicable

C. Related Sections include the following:

1. Section 05121 Architecturally Exposed Structural Steel Framing
2. Section 05730 Ornamental Formed Metal
3. Section 07920 Joint Sealants

1.3 ADMINISTRATIVE REQUIREMENTS

A. Project Pre-installation Meeting

1. Owner, Architect, Contractor, Installer to meet at project site within one week of scheduled installation.
2. Review mounting conditions, installation and storage instructions, fabrication requirements, seaming and protection measures.

1.4 SUBMITTALS

A. General: Submit the following in accordance with conditions of contact and Division 1 specification section 01300 “Submittals”.

B. Product List: Minimum of 3 completed Acrylic Panel Chroma installations or 3 installations of similar materials and complexity. Include contact name and email address for each product.

C. Product Data: Submit manufacturer’s product data; include product description, fabrication information, and compliance with specified performance requirements.

D. Submit product test reports from a qualified independent 3rd party testing agency indicating each type and class of panel system complies with the project performance requirements, based on comprehensive testing of current products. Previously completed test reports will be acceptable if for current manufacturer and indicative of products used on this project.

1. Test reports required are:
   a. Rate of Burning (ASTM D 635)
   b. Self-Ignition Temperature (ASTM D 1929)
   c. Density of Smoke (ASTM D 2843)

E. Shop Drawings: Include plans, elevations, sections, panel dimensions, details, and attachments to other work.

F. Samples for Initial Selection:

1. Submit minimum 2-inch by 2-inch samples. Indicate full color, texture and pattern variation.

G. Samples for Verification:

1. Submit minimum 4-inch by 4-inch sample for each type, texture, pattern and color of solid plastic fabrication.

H. Mockups:

1. Build mockups to verify selections made under sample Submittals and to demonstrate aesthetic effects.
2. Build mockup of [**each type of**] Plastic Fabrication.
3. Approved mockups may become part of the completed Work if undisturbed at time of Substantial Completion.

I. Maintenance Data: Submit manufacturer's care and maintenance data, including care, repair and cleaning instructions. Include in Project closeout documents.

1.5 QUALITY ASSURANCE

A. Manufacturers Qualifications

1. Materials and systems shall be manufactured by a company continuously and regularly employed in the manufacture of specified materials for a period of at least three (3) consecutive years and which can show evidence of those materials being satisfactorily used on at least three (3) projects of similar size, scope and location. At least one (1) of the projects shall have been successful for use one year or longer.
2. Manufacturer must offer a documented reclaim process that will take back, at the manufacturers cost, panels that are at their end-of life cycle. Return process is preceded by following requirements highlighted in Section 01505 Construction and Demolition Waste Management.
3. Manufacturer must have documented training and qualification program for fabrication and installation of plastic fabrications.

1.6 DELIVERY, STORAGE, AND HANDLING

A. Deliver Plastic Fabrications, systems and specified items in manufacturer's standard protective packaging.

B. Do not deliver Plastic Fabrications, system, components and accessories to Project site until areas are ready for installation.

C. Store materials in a flat orientation in a dry place that is not exposed to exterior elements. Materials are to be protected against damage from moisture and direct sunlight.

D. Store Acrylic Panel Chroma in area of installation minimum of 24 hours prior to installation.

E. Handle materials to prevent damage to finished surfaces. Provide protective coverings to prevent damage or staining following installation for duration of project.

F. Before installing Plastic Fabrications, permit them to reach room temperature.

1.7 PROJECT CONDITIONS

A. Environmental Limitations: Do not install Solid Polymer Fabrications until spaces are enclosed and weatherproof, and ambient temperatures and humidity conditions are maintained at the levels indicated for Project when occupied for its intended use.

1.8 WARRANTY

A. Manufacturer's Special Warranty on Plastic Fabrications: Manufacturer's standard form agreeing to repair or replace units that fail in material or workmanship within the specified warranty period.

B. Warranty Period: 1 year after ship date.

PART 2 - PRODUCTS

2.1 MANUFACTURER

A. 3form, Inc., Salt Lake City, Utah, USA / telephone 801-649-2500: Basis of Design

B. Lumicor, Renton, Washington, USA / telephone 425-255-4000: To be approved by Architect

C. Equal: To be approved by Architect

2.2 MATERIALS

A. 3form Chroma: Basis of Design

1. Engineered acrylic resin
2. Sheet Size: Maximum 4' x 10'
3. Thickness: Minimum 1/2"
4. Basis of Design Product: The design of Plastic Fabrications is based on Chroma as provided by Acrylic Panel, Inc. Products from other manufacturers must be approved by the Architect or Designer. Acrylic Panel designs are protected by registered copyrights and patents, and may not be duplicated. Copied designs will be considered a violation of intellectual property rights and will be pursued.

B. Sheet minimum performance attributes:

1. Rate of Burning (ASTM D 635). Material must attain CC2 Rating for a nominal thickness of 1.5 mm (0.060 in.) and greater.
2. Self-Ignition Temperature (ASTM D 1929). Material must have a Self-ignition temperature greater than 850°F.
3. Density of Smoke (ASTM D 2843). Material must have a smoke density less than 10%.
4. Color infusion must use water soluble dyes and penetrate at least 150 microns into material.
5. Applied coatings must be low-VOC, contain non-toxic pigments, not contain any heavy metals and be approved for exterior use.
6. Matte surface should be completely renewable onsite.

C. Alternatives to be approved by Architect

2.3 FABRICATION

A. General: Fabricate Plastic Fabrications to designs, sizes and thicknesses indicated and to comply with indicated standards. Sizes, profiles and other characteristics are indicated on the

drawings, additional fabrication and installation details can be found on the Acrylic Panel Partner Preliminary Project Review, if applicable.

B. Comply with manufacturer's written recommendations for fabrication.

C. Machining: Acceptable means of machining are listed below. Ensure that material is not chipped or warped by machining operations.

1. Sawing: Select equipment and blades suitable for type of cut required.
2. Drilling: Drills specifically designed for use with plastic products.
3. Routing
4. Tapping

D. Forming: Form products to shapes indicated using the appropriate method listed below. Comply with manufacturer's written instructions.

1. Cold Bending
2. Hot Bending
3. Thermoforming: Acceptable only on uncoated material.
4. Drape Forming
5. Matched Mold Forming
6. Mechanical Forming

E. Laminating: Laminate to substrates indicated using adhesives and techniques recommended by manufacturer.

2.4 MISCELLANEOUS MATERIALS

A. General: Provide products of material, size, and shape required for application indicated, and with a proven record of compatibility with surfaces contacted in installation.

B. Cleaner: Type recommended by manufacturer.

C. Fasteners: Use screws designed specifically for plastics. Provide threaded metal inserts for applications requiring frequent disassembly such as light fixtures.

D. Bonding Cements: May be achieved with solvents or adhesives, suitable for use with product and application.

PART 3 - EXECUTION

3.1 EXAMINATION

A. Examine substrates, areas, and conditions where installation of Plastic Fabrications will occur, with Installer present, for compliance with manufacturer's requirements. Verify that substrates and conditions are satisfactory for installation and comply with requirements specified.

3.2 INSTALLATION

A. General: Comply with manufacturer's written instructions for the installation of Plastic Fabrications. Sizes, profiles and other characteristics are indicated on the drawings, additional installation details can be found on the Acrylic Panel Partner Preliminary Project Review, if applicable.

B. Manufacturer's shop to fabricate items to the greatest degree possible.

C. Installation should be performed by manufacturer approved installer.

D. Utilize fasteners, adhesives and bonding agents recommended by manufacturer for type of installation indicated. Material that is chipped, warped, hazed or discolored as a result of installation or fabrication methods will be rejected.

E. Install components plumb, level and rigid, scribed to adjacent finishes, in accordance with approved shop drawings and product data.

F. Form field joints using manufacturer's recommended procedures. Locate seams in panels so that they are not directly in line with seams in substrates.

3.3 CLEANING AND PROTECTION

A. Protect surfaces from damage until date of substantial completion. Repair work or replace damaged work, which cannot be repaired to Architect's satisfaction.

End of Section 06066

PART 1 - GENERAL

1.1 RELATED DOCUMENTS

A. Drawings and general provisions of the Contract, including General and Supplementary Conditions and Division 01 Specification Sections, apply to this Section.

1.2 SUMMARY

A. Section Includes:

1. Silicone joint sealants.
2. Nonstaining silicone joint sealants.
3. Urethane joint sealants.
4. Immersible joint sealants.
5. Silyl-terminated polyether joint sealants.
6. Mildew-resistant joint sealants.
7. Polysulfide joint sealants.
8. Butyl joint sealants.
9. Latex joint sealants.

1.3 PREINSTALLATION MEETINGS

A. Preinstallation Conference: Conduct conference at Project site.

1.4 ACTION SUBMITTALS

A. Product Data: For each joint-sealant product.

B. LEED Submittals:

1. Product Data for Credit IEQ 4.1: For sealants and sealant primers used inside the weatherproofing system, documentation including printed statement of VOC content.
2. Laboratory Test Reports for Credit IEQ 4.1: For sealants and sealant primers used inside the weatherproofing system, documentation indicating that products comply with the testing and product requirements of the California Department of Public Health's (formerly, the California Department of Health Services') "Standard Method for the Testing and Evaluation of Volatile Organic Chemical Emissions from Indoor Sources Using Environmental Chambers."

C. Samples for Initial Selection: Manufacturer's color charts consisting of strips of cured sealants showing the full range of colors available for each product exposed to view.

D. Samples for Verification: For each kind and color of joint sealant required, provide Samples with joint sealants in 1/2-inch- (13-mm-) wide joints formed between two 6-inch- (150-mm-) long strips of material matching the appearance of exposed surfaces adjacent to joint sealants.

E. Joint-Sealant Schedule: Include the following information:

1. Joint-sealant application, joint location, and designation.
2. Joint-sealant manufacturer and product name.
3. Joint-sealant formulation.
4. Joint-sealant color.

1.5 INFORMATIONAL SUBMITTALS

A. Qualification Data: For qualified testing agency.

B. Product Test Reports: For each kind of joint sealant, for tests performed by manufacturer and witnessed by a qualified testing agency.

C. Preconstruction Laboratory Test Schedule: Include the following information for each joint sealant and substrate material to be tested:

1. Joint-sealant location and designation.
2. Manufacturer and product name.
3. Type of substrate material.
4. Proposed test.
5. Number of samples required.

D. Preconstruction Laboratory Test Reports: From sealant manufacturer, indicating the following:

1. Materials forming joint substrates and joint-sealant backings have been tested for compatibility and adhesion with joint sealants.
2. Interpretation of test results and written recommendations for primers and substrate preparation are needed for adhesion.

E. Preconstruction Field-Adhesion-Test Reports: Indicate which sealants and joint preparation methods resulted in optimum adhesion to joint substrates based on testing specified in "Preconstruction Testing" Article.

F. Field-Adhesion-Test Reports: For each sealant application tested.

G. Sample Warranties: For special warranties.

1.6 QUALITY ASSURANCE

A. Installer Qualifications: An authorized representative who is trained and approved by manufacturer.

B. Product Testing: Test joint sealants using a qualified testing agency.

1. Testing Agency Qualifications: Qualified according to ASTM C 1021 to conduct the testing indicated.

C. Mockups: Install sealant in mockups of assemblies specified in other Sections that are indicated to receive joint sealants specified in this Section. Use materials and installation methods specified in this Section.

1.7 PRECONSTRUCTION TESTING

A. Preconstruction Laboratory Testing: Submit to joint-sealant manufacturers, for testing indicated below, samples of materials that will contact or affect joint sealants.

1. Adhesion Testing: Use ASTM C 794 to determine whether priming and other specific joint preparation techniques are required to obtain rapid, optimum adhesion of joint sealants to joint substrates.
2. Compatibility Testing: Use ASTM C 1087 to determine sealant compatibility when in contact with glazing and gasket materials.
3. Submit manufacturer's recommended number of pieces of each type of material, including joint substrates, joint-sealant backings, and miscellaneous materials.
4. Schedule sufficient time for testing and analyzing results to prevent delaying the Work.
5. For materials failing tests, obtain joint-sealant manufacturer's written instructions for corrective measures, including use of specially formulated primers.
6. Testing will not be required if joint-sealant manufacturers submit data that are based on previous testing, not older than 24 months, of sealant products for adhesion to, staining of, and compatibility with joint substrates and other materials matching those submitted.

B. Preconstruction Field-Adhesion Testing: Before installing sealants, field test their adhesion to Project joint substrates as follows:

1. Locate test joints where indicated on Project or, if not indicated, as directed by Architect.
2. Conduct field tests for each kind of sealant and joint substrate.
3. Notify Architect seven days in advance of dates and times when test joints will be erected.
4. Arrange for tests to take place with joint-sealant manufacturer's technical representative present.

    a. Test Method: Test joint sealants according to Method A, Field-Applied Sealant Joint Hand Pull Tab, in Appendix X1.1 in ASTM C 1193 or Method A, Tail Procedure, in ASTM C 1521.

        1) For joints with dissimilar substrates, verify adhesion to each substrate separately; extend cut along one side, verifying adhesion to opposite side. Repeat procedure for opposite side.

5. Report whether sealant failed to adhere to joint substrates or tore cohesively. Include data on pull distance used to test each kind of product and joint substrate. For sealants that fail adhesively, retest until satisfactory adhesion is obtained.
6. Evaluation of Preconstruction Field-Adhesion-Test Results: Sealants not evidencing adhesive failure from testing, in absence of other indications of noncompliance with requirements, will be considered satisfactory. Do not use sealants that fail to adhere to joint substrates during testing.

1.8 FIELD CONDITIONS

A. Do not proceed with installation of joint sealants under the following conditions:

1. When ambient and substrate temperature conditions are outside limits permitted by joint-sealant manufacturer or are below 40 deg F (5 deg C).
2. When joint substrates are wet.
3. Where joint widths are less than those allowed by joint-sealant manufacturer for applications indicated.
4. Where contaminants capable of interfering with adhesion have not yet been removed from joint substrates.

1.9 WARRANTY

A. Special Installer's Warranty: Installer agrees to repair or replace joint sealants that do not comply with performance and other requirements specified in this Section within specified warranty period.

1. Warranty Period: Two years from date of Substantial Completion.

B. Special Manufacturer's Warranty: Manufacturer agrees to furnish joint sealants to repair or replace those joint sealants that do not comply with performance and other requirements specified in this Section within specified warranty period.

1. Warranty Period: Five years from date of Substantial Completion.

C. Special warranties specified in this article exclude deterioration or failure of joint sealants from the following:

1. Movement of the structure caused by stresses on the sealant exceeding sealant manufacturer's written specifications for sealant elongation and compression.
2. Disintegration of joint substrates from causes exceeding design specifications.
3. Mechanical damage caused by individuals, tools, or other outside agents.
4. Changes in sealant appearance caused by accumulation of dirt or other atmospheric contaminants.

PART 2 - PRODUCTS

2.1 JOINT SEALANTS, GENERAL

A. Compatibility: Provide joint sealants, backings, and other related materials that are compatible with one another and with joint substrates under conditions of service and application, as demonstrated by joint-sealant manufacturer, based on testing and field experience.

B. VOC Content of Interior Sealants: Sealants and sealant primers used inside the weatherproofing system shall comply with the following:

1. Architectural sealants shall have a VOC content of 250 g/L or less.

2. Sealants and sealant primers for nonporous substrates shall have a VOC content of 250 g/L or less.
3. Sealants and sealant primers for nonporous substrates shall have a VOC content of 775 g/L or less.

C. Low-Emitting Interior Sealants: Sealants and sealant primers shall comply with the testing and product requirements of the California Department of Health's (formerly, the California Department of Health Services') "Standard Method for the Testing and Evaluation of Volatile Organic Chemical Emissions from Indoor Sources Using Environmental Chambers."

D. Colors of Exposed Joint Sealants: As selected by Architect from manufacturer's full range.

2.2 SILICONE JOINT SEALANTS

A. Silicone, S, NS, 100/50, NT: Single-component, nonsag, plus 100 percent and minus 50 percent movement capability, nontraffic-use, neutral-curing silicone joint sealant; ASTM C 920, Type S, Grade NS, Class 100/50, Use NT.

B. Silicone, S, NS, 50, NT: Single-component, nonsag, plus 50 percent and minus 50 percent movement capability, nontraffic-use, neutral-curing silicone joint sealant; ASTM C 920, Type S, Grade NS, Class 50, Use NT.

C. Silicone, S, NS, 35, NT: Single-component, nonsag, plus 35 percent and minus 35 percent movement capability. nontraffic-use, neutral-curing silicone joint sealant; ASTM C 920, Type S, Grade NS, Class 35, Use NT.

D. Silicone, S, NS, 25, NT: Single-component, nonsag, plus 25 percent and minus 25 percent movement capability, nontraffic-use, neutral-curing silicone joint sealant; ASTM C 920, Type S, Grade NS, Class 25, Use NT.

E. Silicone, Acid Curing, S, NS, 25, NT: Single-component, nonsag, plus 25 percent and minus 25 percent movement capability, nontraffic-use, acid-curing silicone joint sealant: ASTM C 920, Type S, Grade NS, Class 25, Use NT.

F. Silicone, S, NS, 100/50, T, NT: Single-component, nonsag, plus 100 percent and minus 50 percent movement capability, traffic- and nontraffic-use, neutral-curing silicone joint sealant; ASTM C 920, Type S, Grade NS, Class 100/50, Uses T and NT.

G. Silicone, S, NS, 50, T, NT: Single-component, nonsag, plus 50 percent and minus 50 percent movement capability, traffic- and nontraffic-use, neutral-curing silicone joint sealant; ASTM C 920, Type S, Grade NS, Class 50, Uses T and NT.

H. Silicone, S, NS, 25, T, NT: Single-component, nonsag, plus 25 percent and minus 25 percent movement capability, traffic- and nontraffic-use, neutral-curing silicone joint sealant; ASTM C 920, Type S, Grade NS, Class 25, Uses T and NT.

I. Silicone, S, P, 100/50, T, NT: Single-component, pourable, plus 100 percent and minus 50 percent movement capability traffic- and nontraffic-use, neutral-curing silicone joint sealant; ASTM C 920, Type S, Grade P, Class 100/50, Uses T and NT.

J. Silicone, S, P, 25, T, NT: Single-component, pourable, plus 25 percent and minus 25 percent movement capability, traffic- and nontraffic-use, neutral-curing silicone joint sealant; ASTM C 920, Type S, Grade P, Class 25, Uses T and NT.

K. Silicone, M, P, 100/50, T, NT: Multicomponent, pourable, plus 100 percent and minus 50 percent movement capability, traffic- and nontraffic-use, neutral-curing silicone joint sealant; ASTM C 920, Type M, Grade P, Class 100/50, Uses T and NT.

2.3 NONSTAINING SILICONE JOINT SEALANTS

A. Nonstaining Joint Sealants: No staining of substrates when tested according to ASTM C 1248.

B. Silicone, Nonstaining, S, NS, 100/50, NT: Nonstaining, single-component, nonsag, plus 100 percent and minus 50 percent movement capability, nontraffic-use, neutral-curing silicone joint sealant; ASTM C 920, Type S, Grade NS, Class 100/50, Use NT.

C. Silicone, Nonstaining, S, NS, 50, NT: Nonstaining, single-component, nonsag, plus 50 percent and minus 50 percent movement capability, nontraffic-use, neutral-curing silicone joint sealant; ASTM C 920, Type S, Grade NS, Class 50, Use NT.

D. Silicone, Nonstaining, S, NS, 100/50, T, NT: Nonstaining, single-component, nonsag, plus 100 percent and minus 50 percent movement capability, traffic- and nontraffic-use, neutral-curing silicone joint sealant; ASTM C 920, Type S, Grade NS, Class 100/50, Uses T and NT.

E. Silicone, Nonstaining, M, NS, 50, NT: Nonstaining, multicomponent, nonsag, plus 50 percent and minus 50 percent movement capability, nontraffic-use, neutral-curing silicone joint sealant; ASTM C 920, Type M, Grade NS, Class 50, Use NT.

2.4 URETHANE JOINT SEALANTS

A. Urethane, S, NS, 25, NT: Single-component, nonsag, nontraffic-use, plus 25 percent and minus 25 percent movement capability, urethane joint sealant; ASTM C 920, Type S, Grade NS, Class 25, Use NT.

B. Urethane, S, NS, 100/50, T, NT: Single-component, nonsag, plus 100 percent and minus 50 percent movement capability, traffic- and nontraffic-use, urethane joint sealant; ASTM C 920, Type S, Grade NS, Class 100/50, Uses T and NT.

C. Urethane, S, NS, 25, T, NT: Single-component, nonsag, plus 25 percent and minus 25 percent movement capability, traffic- and nontraffic-use, urethane joint sealant; ASTM C 920, Type S, Grade NS, Class 25, Uses T and NT.

D. Urethane, S, P, 35, T, NT: Single-component, pourable, plus 35 percent and minus 35 percent movement capability, traffic- and nontraffic-use, urethane joint sealant; ASTM C 920, Type S, Grade P, Class 35, Uses T and NT.

E. Urethane, S, P, 25, T, NT: Single-component, pourable, plus 25 percent and minus 25 percent movement capability, traffic- and nontraffic-use, urethane joint sealant; ASTM C 920, Type S, Grade P, Class 25, Uses T and NT.

F. Urethane, M, NS, 50, NT: Multicomponent, nonsag, plus 50 percent and minus 50 percent movement capability nontraffic-use, urethane joint sealant; ASTM C 920, Type M, Grade NS, Class 50, Use NT.

G. Urethane, M, NS, 25, NT: Multicomponent, nonsag, plus 25 percent and minus 25 percent movement capability, nontraffic-use, urethane joint sealant; ASTM C 920, Type M, Grade NS, Class 25, Use NT.

H. Urethane, M, NS, 50, T, NT: Multicomponent, nonsag, plus 50 percent and minus 50 percent movement capability, traffic- and nontraffic-use, urethane joint sealant; ASTM C 920, Type M, Grade NS, Class 50, Uses T and NT.

I. Urethane, M, NS, 25, T, NT: Multicomponent, nonsag, plus 25 percent and minus 25 percent movement capability, traffic- and nontraffic-use, urethane joint sealant; ASTM C 920, Type M, Grade NS, Class 25, Uses T and NT.

J. Urethane, M, P, 50, T, NT: Multicomponent, pourable, plus 50 percent and minus 50 percent movement capability, traffic- and nontraffic-use, urethane joint sealant; ASTM C 920, Type M, Grade P, Class 50, Uses T and NT.

K. Urethane, M, P, 25, T, NT: Multicomponent, pourable, plus 25 percent and minus 25 percent movement capability, traffic- and nontraffic-use, urethane joint sealant; ASTM C 920, Type M, Grade P, Class 25, Uses T and NT.

2.5 IMMERSIBLE JOINT SEALANTS

A. Immersible Joint Sealants. Suitable for immersion in liquids; ASTM C 1247, [Class 1] [Class 2]; tested in deionized water unless otherwise indicated

B. Urethane, Immersible, S, NS, 100/50, NT, I: Immersible, single-component, nonsag, plus 100 percent and minus 50 percent movement capability, nontraffic-use, urethane joint sealant; ASTM C 920, Type S, Grade NS, Class 100/50, Uses NT, and I.

C. Urethane, Immersible, S, NS, 35, NT, I: Immersible, single-component, nonsag, plus 35 percent and minus 35 percent movement capability, nontraffic-use, urethane joint sealant; ASTM C 920, Type S, Grade NS, Class 35, Use NT and I.

D. Urethane, Immersible, S, NS, 50, T, NT, I: Immersible, single-component, nonsag, plus 50 percent and minus 50 percent movement capability, traffic- and nontraffic-use, urethane joint sealant; ASTM C 920, Type S, Grade NS, Class 50, Uses T, NT, and I.

E. Urethane, Immersible, S, NS, 35, T, NT, I: Immersible, single-component, nonsag, plus 35 percent and minus 35 percent movement capability, traffic- and nontraffic-use, urethane joint sealant; ASTM C 920, Type S, Grade NS, Class 35, Uses T, NT, and I.

F. Urethane, Immersible, S, NS, 25, T, NT, I: Immersible, single-component, nonsag, plus 25 percent and minus 25 percent movement capability, traffic- and nontraffic-use, urethane joint sealant; ASTM C 920, Type S, Grade NS, Class 25, Uses T, NT, and I.

G. Urethane, Immersible, S, P, 50, T, NT, I: Immersible, single-component, pourable, plus 50 percent and minus 50 percent movement capability, traffic- and nontraffic-use, urethane joint sealant; ASTM C 920, Type S, Grade P, Class 50, Uses T, NT, and I.

H. Urethane, Immersible, S, P, 25, T, NT, I: Immersible, single-component, pourable, plus 25 percent and minus 25 percent movement capability, traffic- and nontraffic-use, urethane joint sealant; ASTM C 920, Type S, Grade P, Class 25, Uses T, NT, and I.

I. Polysulfide, Immersible, M, NS, 25, NT, I: Immersible, multicomponent, nonsag, plus 25 percent and minus 25 percent movement capability, nontraffic-use, polysulfide joint sealant; ASTM C 920, Type M, Grade NS, Class 25, Uses NT and I.

J. Urethane, Immersible, M, NS, 50, T, NT, I: Immersible, multicomponent, nonsag, plus 50 percent and minus 50 percent movement capability, traffic- and nontraffic-use, urethane joint sealant; ASTM C 920, Type M, Grade NS, Class 50, Uses T, NT, and I.

K. Urethane, Immersible, M, NS, 25, T, NT, I: Immersible, multicomponent, nonsag, plus 25 percent and minus 25 percent movement capability, traffic- and nontraffic-use, urethane joint sealant; ASTM C 920, Type M, Grade NS, Class 25, Uses T, NT, and I.

L. Polysulfide, Immersible, M, NS, 25, T, NT, I: Immersible, multicomponent, nonsag, plus 25 percent and minus 25 percent movement capability, traffic- and nontraffic-use, polysulfide joint sealant; ASTM C 920, Type M, Grade NS, Class 25, Uses T, NT, and I.

M. Urethane, Immersible, M, P, 25, T, NT, I: Immersible, multicomponent, nonsag, plus 25 percent and minus 25 percent movement capability, traffic- and nontraffic-use, urethane joint sealant; ASTM C 920, Type M, Grade P, Class 25, Uses T, NT, and I.

2.6 SILYL-TERMINATED POLYETHER (STPE) JOINT SEALANTS

A. STPE, S, NS, 50, NT: Single-component, nonsag, plus 50 percent and minus 50 percent movement capability, nontraffic-use, silyl-terminated polyether joint sealant; ASTM C 920, Type S, Grade NS, Class 50, Use NT.

B. STPE, S, NS, 35, NT: Single-component, nonsag, plus 35 percent and minus 35 percent movement capability, nontraffic-use, silyl-terminated polyether joint sealant; ASTM C 920, Type S, Grade NS, Class 35, Use NT.

C. STPE, S, NS, 25, NT: Single-component, nonsag, plus 25 percent and minus 25 percent movement capability, nontraffic-use, silyl-terminated polyether joint sealant; ASTM C 920, Type S, Grade NS, Class 25, Use NT.

D. STPE, S, NS, 100/50, T, NT: Single-component, nonsag, plus 100 percent and minus 50 percent movement capability, traffic- and nontraffic-use, silyl-terminated polyether joint sealant; ASTM C 920, Type S, Grade NS, Class 100, Uses T and NT.

E. STPE, S, NS, 50, T, NT: Single-component, nonsag, plus 50 percent and minus 50 percent movement capability, traffic- and nontraffic-use, silyl-terminated polyether joint sealant; ASTM C 920, Type S, Grade NS, Class 50, Uses T and NT.

F. STPE, S, NS, 35, T, NT: Single-component, nonsag, plus 35 percent and minus 35 percent movement capability, traffic- and nontraffic-use, silyl-terminated polyether joint sealant; ASTM C 920, Type S, Grade NS, Class 35, Uses T and NT.

G. STPE, S, NS, 25, T, NT: Single-component, nonsag, plus 25 percent and minus 25 percent movement capability, traffic- and nontraffic-use, silyl-terminated polyether joint sealant; ASTM C 920, Type S, Grade NS, Class 25, Uses T and NT.

H. STPE, S, P, 25, T, NT: Single-component, pourable, plus 25 percent and minus 25 percent movement capability, traffic- and nontraffic-use, silyl-terminated polyether joint sealant; ASTM C 920, Type S, Grade P, Class 25, Uses T and NT.

2.7 MILDEW-RESISTANT JOINT SEALANTS

A. Mildew-Resistant Joint Sealants: Formulated for prolonged exposure to humidity with fungicide to prevent mold and mildew growth.

B. Silicone, Mildew Resistant, Acid Curing, S, NS, 25, NT: Mildew-resistant, single-component, nonsag, plus 25 percent and minus 25 percent movement capability, nontraffic-use, acid-curing silicone joint sealant; ASTM C 920, Type S, Grade NS, Class 25, Use NT.

C. STPE, Mildew Resistant, S, NS, 50, NT: Mildew-resistant, single-component, nonsag, plus 50 percent and minus 50 percent movement capability, nontraffic-use, silyl-terminated polyether joint sealant; ASTM C 920, Type S, Grade NS, Class 50, Use NT.

2.8 POLYSULFIDE JOINT SEALANTS

A. Polysulfide, S, NS, 25, NT: Single-component, nonsag, plus 25 percent and minus 25 percent movement capability, nontraffic-use, polysulfide joint sealant; ASTM C 920, Type S, Grade NS, Class 25, Use NT.

B. Polysulfide, M, NS, 25, T, NT: Multicomponent, nonsag, plus 25 percent and minus 25 percent movement capability, nontraffic-use, polysulfide joint sealant; ASTM C 920, Type M, Grade NS, Class 25, Use NT.

C. Polysulfide, M, P, 25, T, NT: Multicomponent, pourable, plus 25 percent and minus 25 percent movement capability, traffic- and nontraffic-use, polysulfide joint sealant; ASTM C 920, Type M, Grade P, Class 25, Uses T and NT.

2.9 BUTYL JOINT SEALANTS

A. Butyl-Rubber-Based Joint Sealants: ASTM C 1311.

2.10 LATEX JOINT SEALANTS

A. Acrylic Latex: Acrylic latex or siliconized acrylic latex, ASTM C 834, Type OP, Grade NF.

2.11 JOINT-SEALANT BACKING

A. Sealant Backing Material, General: Nonstaining; compatible with joint substrates, sealants, primers, and other joint fillers; and approved for applications indicated by sealant manufacturer based on field experience and laboratory testing.

B. Cylindrical Sealant Backings: ASTM C 1330, Type C (closed-cell material with a surface skin), Type O (open-cell material), Type B (bicellular material with a surface skin) or any of the preceding types, as approved in writing by joint-sealant manufacturer for joint application indicated, and of size and density to control sealant depth and otherwise contribute to producing optimum sealant performance.

C. Bond-Breaker Tape: Polyethylene tape or other plastic tape recommended by sealant manufacturer for preventing sealant from adhering to rigid, inflexible joint-filler materials or joint surfaces at back of joint. Provide self-adhesive tape where applicable.

2.12 MISCELLANEOUS MATERIALS

A. Primer: Material recommended by joint-sealant manufacturer where required for adhesion of sealant to joint substrates indicated, as determined from preconstruction joint-sealant-substrate tests and field tests.

B. Cleaners for Nonporous Surfaces: Chemical cleaners acceptable to manufacturers of sealants and sealant backing materials, free of oily residues or other substances capable of staining or harming joint substrates and adjacent nonporous surfaces in any way, and formulated to promote optimum adhesion of sealants to joint substrates.

C. Masking Tape: Nonstaining, nonabsorbent material compatible with joint sealants and surfaces adjacent to joints.

PART 3 - EXECUTION

3.1 EXAMINATION

A. Examine joints indicated to receive joint sealants, with Installer present, for compliance with requirements for joint configuration, installation tolerances, and other conditions affecting performance of the Work.

B. Proceed with installation only after unsatisfactory conditions have been corrected.

3.2 PREPARATION

A. Surface Cleaning of Joints: Clean out joints immediately before installing joint sealants to comply with joint-sealant manufacturer's written instructions and the following requirements:

1. Remove all foreign material from joint substrates that could interfere with adhesion of joint sealant, including dust, paints (except for permanent, protective coatings tested and

approved for sealant adhesion and compatibility by sealant manufacturer), old joint sealants, oil, grease, waterproofing, water repellents, water, surface dirt, and frost.

2. Clean porous joint substrate surfaces by brushing, grinding, mechanical abrading, or a combination of these methods to produce a clean, sound substrate capable of developing optimum bond with joint sealants. Remove loose particles remaining after cleaning operations above by vacuuming or blowing out joints with oil-free compressed air. Porous joint substrates include the following:

    a. Concrete.
    b. Masonry.
    c. Unglazed surfaces of ceramic tile.
    d. Exterior insulation and finish systems.

3. Remove laitance and form-release agents from concrete.
4. Clean nonporous joint substrate surfaces with chemical cleaners or other means that do not stain, harm substrates, or leave residues capable of interfering with adhesion of joint sealants. Nonporous joint substrates include the following:

    a. Metal.
    b. Glass.
    c. Porcelain enamel.
    d. Glazed surfaces of ceramic tile.

B. Joint Priming: Prime joint substrates where recommended by joint-sealant manufacturer or as indicated by preconstruction joint-sealant-substrate tests or prior experience. Apply primer to comply with joint-sealant manufacturer's written instructions. Confine primers to areas of joint-sealant bond; do not allow spillage or migration onto adjoining surfaces.

C. Masking Tape: Use masking tape where required to prevent contact of sealant or primer with adjoining surfaces that otherwise would be permanently stained or damaged by such contact or by cleaning methods required to remove sealant smears. Remove tape immediately after tooling without disturbing joint seal.

3.3 INSTALLATION OF JOINT SEALANTS

A. General: Comply with joint-sealant manufacturer's written installation instructions for products and applications indicated, unless more stringent requirements apply.

B. Sealant Installation Standard: Comply with recommendations in ASTM C 1193 for use of joint sealants as applicable to materials, applications, and conditions indicated.

C. Install sealant backings of kind indicated to support sealants during application and at position required to produce cross-sectional shapes and depths of installed sealants relative to joint widths that allow optimum sealant movement capability.

1. Do not leave gaps between ends of sealant backings.
2. Do not stretch, twist, puncture, or tear sealant backings.
3. Remove absorbent sealant backings that have become wet before sealant application, and replace them with dry materials.

D. Install bond-breaker tape behind sealants where sealant backings are not used between sealants and backs of joints.

E. Install sealants using proven techniques that comply with the following and at the same time backings are installed:

1. Place sealants so they directly contact and fully wet joint substrates.
2. Completely fill recesses in each joint configuration.
3. Produce uniform, cross-sectional shapes and depths relative to joint widths that allow optimum sealant movement capability.

F. Tooling of Nonsag Sealants: Immediately after sealant application and before skinning or curing begins, tool sealants according to requirements specified in subparagraphs below to form smooth, uniform beads of configuration indicated; to eliminate air pockets; and to ensure contact and adhesion of sealant with sides of joint.

1. Remove excess sealant from surfaces adjacent to joints.
2. Use tooling agents that are approved in writing by sealant manufacturer and that do not discolor sealants or adjacent surfaces.
3. Provide concave joint profile per Figure 8A in ASTM C 1193 unless otherwise indicated.
4. Provide flush joint profile at locations indicated on Drawings according to Figure 8B in ASTM C 1193.
5. Provide recessed joint configuration of recess depth and at locations indicated on Drawings according to Figure 8C in ASTM C 1193.

    a. Use masking tape to protect surfaces adjacent to recessed tooled joints.

3.4 FIELD QUALITY CONTROL

A. Field-Adhesion Testing: Field test joint-sealant adhesion to joint substrates as follows:

1. Extent of Testing: Test completed and cured sealant joints as follows:

    a. Perform 10 tests for the first 1000 feet (300 m) of joint length for each kind of sealant and joint substrate.
    b. Perform one test for each 1000 feet (300 m) of joint length thereafter or one test per each floor per elevation.

2. Test Method: Test joint sealants according to Method A, Field-Applied Sealant Joint Hand Pull Tab, in Appendix X1 in ASTM C 1193 or Method A, Tail Procedure, in ASTM C 1521.

    a. For joints with dissimilar substrates, verify adhesion to each substrate separately; extend cut along one side, verifying adhesion to opposite side. Repeat procedure for opposite side.

3. Inspect tested joints and report on the following:

    a. Whether sealants filled joint cavities and are free of voids.

b. Whether sealant dimensions and configurations comply with specified requirements.
c. Whether sealants in joints connected to pulled-out portion failed to adhere to joint substrates or tore cohesively. Include data on pull distance used to test each kind of product and joint substrate. Compare these results to determine if adhesion complies with sealant manufacturer's field-adhesion hand-pull test criteria.

4. Record test results in a field-adhesion-test log. Include dates when sealants were installed, names of persons who installed sealants, test dates, test locations, whether joints were primed, adhesion results and percent elongations, sealant material, sealant configuration, and sealant dimensions.
5. Repair sealants pulled from test area by applying new sealants following same procedures used originally to seal joints. Ensure that original sealant surfaces are clean and that new sealant contacts original sealant.

B. Evaluation of Field-Adhesion-Test Results: Sealants not evidencing adhesive failure from testing or noncompliance with other indicated requirements will be considered satisfactory. Remove sealants that fail to adhere to joint substrates during testing or to comply with other requirements. Retest failed applications until test results prove sealants comply with indicated requirements.

3.5 CLEANING

A. Clean off excess sealant or sealant smears adjacent to joints as the Work progresses by methods and with cleaning materials approved in writing by manufacturers of joint sealants and of products in which joints occur.

3.6 PROTECTION

A. Protect joint sealants during and after curing period from contact with contaminating substances and from damage resulting from construction operations or other causes so sealants are without deterioration or damage at time of Substantial Completion. If, despite such protection, damage or deterioration occurs, cut out, remove, and repair damaged or deteriorated joint sealants immediately so installations with repaired areas are indistinguishable from original work.

3.7 JOINT-SEALANT SCHEDULE

A. Joint-Sealant Application: Exterior joints in horizontal traffic surfaces.

1. Joint Locations:

a. Control and expansion joints in brick pavers.
b. Isolation and contraction joints in cast-in-place concrete slabs.
c. Joints between plant-precast architectural concrete paving units.
d. Tile control and expansion joints.
e. Joints between different materials listed above.
f. Other joints as indicated on Drawings.

2. Joint Sealant: Urethane, M, P, 50, T, NT.
3. Joint-Sealant Color: As selected by Architect from manufacturer's full range of colors.

B. Joint-Sealant Application: Exterior joints in horizontal traffic surfaces subject to water immersion.

1. Joint Locations:

   a. Joints in pedestrian plazas.
   b. Joints in swimming pool decks.
   c. Other joints as indicated on Drawings.

2. Joint Sealant: Urethane, immersible, S, P, 25, T, NT, I.
3. Joint-Sealant Color: As selected by Architect from manufacturer's full range of colors.

C. Joint-Sealant Application: Exterior joints in vertical surfaces and horizontal nontraffic surfaces.

1. Joint Locations:

   a. Construction joints in cast-in-place concrete.
   b. Joints between plant-precast architectural concrete units.
   c. Control and expansion joints in unit masonry.
   d. Joints in dimension stone cladding.
   e. Joints in glass unit masonry assemblies.
   f. Joints in exterior insulation and finish systems.
   g. Joints between metal panels.
   h. Joints between different materials listed above.
   i. Other joints as indicated on Drawings.

2. Joint Sealant: Silicone, nonstaining, S, NS, 50, NT.
3. Joint-Sealant Color: As selected by Architect from manufacturer's full range of colors.

D. Joint-Sealant Application: Interior joints in horizontal traffic surfaces.

1. Joint Locations:

   a. Isolation joints in cast-in-place concrete slabs.
   b. Control and expansion joints in stone flooring.
   c. Control and expansion joints in brick flooring.
   d. Control and expansion joints in tile flooring.
   e. Other joints as indicated on Drawings.

2. Joint Sealant: Urethane, S, P, 25, T, NT.
3. Joint-Sealant Color: As selected by Architect from manufacturer's full range of colors.

E. Joint-Sealant Application: Interior joints in vertical surfaces and horizontal nontraffic surfaces.

1. Joint Locations:

   a. Control and expansion joints on exposed interior surfaces of exterior walls.
   b. Tile control and expansion joints.

c. Vertical joints on exposed surfaces of concrete.
d. Other joints as indicated on Drawings.

2. Joint Sealant: Urethane, S, NS, 25, NT.
3. Joint-Sealant Color: As selected by Architect from manufacturer's full range of colors.

F. Joint-Sealant Application: Interior joints in vertical surfaces and horizontal nontraffic surfaces not subject to significant movement.

1. Joint Locations:

a. Control joints on exposed interior surfaces of exterior walls.
b. Other joints as indicated on Drawings.

2. Joint Sealant: Acrylic latex.
3. Joint-Sealant Color: As selected by Architect from manufacturer's full range of colors.

G. Joint-Sealant Application: Mildew-resistant interior joints in vertical surfaces and horizontal nontraffic surfaces.

1. Joint Locations:

a. Joints between plumbing fixtures and adjoining walls, floors, and counters.
b. Tile control and expansion joints where indicated.
c. Other joints as indicated on Drawings.

2. Joint Sealant: Silicone, mildew resistant, acid curing, S, NS, 25, NT
3. Joint-Sealant Color: As selected by Architect from manufacturer's full range of colors.

H. Joint-Sealant Application: Concealed mastics.

1. Joint Locations:

a. Aluminum thresholds.
b. Sill plates.
c. Other joints as indicated on Drawings.

2. Joint Sealant: Butyl-rubber based.
3. Joint-Sealant Color: As selected by Architect from manufacturer's full range of colors.

END OF SECTION 07920

PART 1 - GENERAL

1.1 RELATED DOCUMENTS

A. Drawings and general provisions of the Contract, including General and Supplementary Conditions and Division 01 Specification Sections, apply to this Section.

1.2 SUMMARY

A. Section includes surface preparation and the application of paint systems on exterior substrates.

B. Related Requirements:

1. Section 05120 "Structural Steel" for shop priming of metal substrates with primers specified in this Section.
2. Section 09960 "High-Performance Coatings" for special-use coatings.

1.3 DEFINITIONS

A. Gloss Level 1: Not more than 5 units at 60 degrees and 10 units at 85 degrees, according to ASTM D 523.

B. Gloss Level 3: 10 to 25 units at 60 degrees and 10 to 35 units at 85 degrees, according to ASTM D 523.

C. Gloss Level 4: 20 to 35 units at 60 degrees and not less than 35 units at 85 degrees, according to ASTM D 523.

D. Gloss Level 5: 35 to 70 units at 60 degrees, according to ASTM D 523.

E. Gloss Level 6: 70 to 85 units at 60 degrees, according to ASTM D 523.

F. Gloss Level 7: More than 85 units at 60 degrees, according to ASTM D 523.

1.4 ACTION SUBMITTALS

A. Product Data: For each type of product. Include preparation requirements and application instructions.

B. Samples for Initial Selection: For each type of topcoat product.

C. Samples for Verification: For each type of paint system and each color and gloss of topcoat.

1. Submit Samples on rigid backing, 8 inches (200 mm) square.
2. Step coats on Samples to show each coat required for system.
3. Label each coat of each Sample.

4. Label each Sample for location and application area.

D. Product List: For each product indicated, include the following:

1. Cross-reference to paint system and locations of application areas. Use same designations indicated on Drawings and in schedules.
2. Printout of current "MPI Approved Products List" for each product category specified, with the proposed product highlighted.
3. VOC content.

1.5 MAINTENANCE MATERIAL SUBMITTALS

A. Furnish extra materials, from the same product run, that match products installed and that are packaged with protective covering for storage and identified with labels describing contents.

1. Paint: 5 percent, but not less than 1 gal. (3.8 L) of each material and color applied.

1.6 QUALITY ASSURANCE

A. Mockups: Apply mockups of each paint system indicated and each color and finish selected to verify preliminary selections made under Sample submittals and to demonstrate aesthetic effects and set quality standards for materials and execution.

1. Architect will select one surface to represent surfaces and conditions for application of each paint system specified in Part 3.

a. Vertical and Horizontal Surfaces: Provide samples of at least 100 sq. ft. (9 sq. m).
b. Other Items: Architect will designate items or areas required.

2. Final approval of color selections will be based on mockups.

a. If preliminary color selections are not approved, apply additional mockups of additional colors selected by Architect at no added cost to Owner.

3. Approval of mockups does not constitute approval of deviations from the Contract Documents contained in mockups unless Architect specifically approves such deviations in writing.
4. Subject to compliance with requirements, approved mockups may become part of the completed Work if undisturbed at time of Substantial Completion.

1.7 DELIVERY, STORAGE, AND HANDLING

A. Store materials not in use in tightly covered containers in well-ventilated areas with ambient temperatures continuously maintained at not less than 45 deg F (7 deg C).

1. Maintain containers in clean condition, free of foreign materials and residue.
2. Remove rags and waste from storage areas daily.

1.8 FIELD CONDITIONS

A. Apply paints only when temperature of surfaces to be painted and ambient air temperatures are between 50 and 95 deg F (10 and 35 deg C).

B. Do not apply paints in snow, rain, fog, or mist; when relative humidity exceeds 85 percent; at temperatures less than 5 deg F (3 deg C) above the dew point; or to damp or wet surfaces.

PART 2 - PRODUCTS

2.1 MANUFACTURERS

A. Benjamin Moore & Co.

B. The Sherwin-Williams Company

C. Glidden Professional

2.2 PAINT, GENERAL

A. MPI Standards: Provide products that comply with MPI standards indicated and that are listed in its "MPI Approved Products List."

B. Material Compatibility:

1. Provide materials for use within each paint system that are compatible with one another and substrates indicated, under conditions of service and application as demonstrated by manufacturer, based on testing and field experience.
2. For each coat in a paint system, provide products recommended in writing by manufacturers of topcoat for use in paint system and on substrate indicated.

C. VOC Content: Provide materials that comply with VOC limits of authorities having jurisdiction.

D. Colors: As selected by Architect from manufacturer's full range.

2.3 WATER-BASED PAINTS

A. Latex, Exterior Semi-Gloss (Gloss Level 5):

1. Benjamin Moore & Co. HP29 or equal

2. Sherwin-Williams Pro Industrial DTM Acrylic

3. Glidden Professional Devflex 4216HP

2.4 SOURCE QUALITY CONTROL

A. Testing of Paint Materials: Owner reserves the right to invoke the following procedure:

1. Owner will engage the services of a qualified testing agency to sample paint materials. Contractor will be notified in advance and may be present when samples are taken. If paint materials have already been delivered to Project site, samples may be taken at Project site. Samples will be identified, sealed, and certified by testing agency.
2. Testing agency will perform tests for compliance with product requirements.
3. Owner may direct Contractor to stop applying paints if test results show materials being used do not comply with product requirements. Contractor shall remove noncomplying paint materials from Project site, pay for testing, and repaint surfaces painted with rejected materials. Contractor will be required to remove rejected materials from previously painted surfaces if, on repainting with complying materials, the two paints are incompatible.

PART 3 - EXECUTION

3.1 EXAMINATION

A. Examine substrates and conditions, with Applicator present, for compliance with requirements for maximum moisture content and other conditions affecting performance of the Work.

B. Maximum Moisture Content of Substrates: When measured with an electronic moisture meter as follows:

1. Concrete: 12 percent.
2. Masonry (Clay and CMU): 12 percent.
3. Wood: 15 percent.
4. Portland Cement Plaster: 12 percent.
5. Gypsum Board: 12 percent.

C. Portland Cement Plaster Substrates: Verify that plaster is fully cured.

D. Exterior Gypsum Board Substrates: Verify that finishing compound is sanded smooth.

E. Verify suitability of substrates, including surface conditions and compatibility with existing finishes and primers.

F. Proceed with coating application only after unsatisfactory conditions have been corrected.

1. Application of coating indicates acceptance of surfaces and conditions.

3.2 PREPARATION

A. Comply with manufacturer's written instructions and recommendations in "MPI Manual" applicable to substrates and paint systems indicated.

B. Remove hardware, covers, plates, and similar items already in place that are removable and are not to be painted. If removal is impractical or impossible because of size or weight of item, provide surface-applied protection before surface preparation and painting.

1. After completing painting operations, use workers skilled in the trades involved to reinstall items that were removed. Remove surface-applied protection.

C. Clean substrates of substances that could impair bond of paints, including dust, dirt, oil, grease, and incompatible paints and encapsulants.

1. Remove incompatible primers and reprime substrate with compatible primers or apply tie coat as required to produce paint systems indicated.

D. Concrete Substrates: Remove release agents, curing compounds, efflorescence, and chalk. Do not paint surfaces if moisture content or alkalinity of surfaces to be painted exceeds that permitted in manufacturer's written instructions.

E. Masonry Substrates: Remove efflorescence and chalk. Do not paint surfaces if moisture content or alkalinity of surfaces or mortar joints exceeds that permitted in manufacturer's written instructions.

F. Steel Substrates: Remove rust, loose mill scale, and shop primer if any. Clean using methods recommended in writing by paint manufacturer.

G. Shop-Primed Steel Substrates: Clean field welds, bolted connections, and abraded areas of shop paint, and paint exposed areas with the same material as used for shop priming to comply with SSPC-PA 1 for touching up shop-primed surfaces.

H. Galvanized-Metal Substrates: Remove grease and oil residue from galvanized sheet metal by mechanical methods to produce clean, lightly etched surfaces that promote adhesion of subsequently applied paints.

I. Aluminum Substrates: Remove loose surface oxidation.

J. Wood Substrates:

1. Scrape and clean knots. Before applying primer, apply coat of knot sealer recommended in writing by topcoat manufacturer for exterior use in paint system indicated.
2. Sand surfaces that will be exposed to view, and dust off.
3. Prime edges, ends, faces, undersides, and backsides of wood.
4. After priming, fill holes and imperfections in the finish surfaces with putty or plastic wood filler. Sand smooth when dried.

K. Plastic Trim Fabrication Substrates: Remove dust, dirt, and other foreign material that might impair bond of paints to substrates.

3.3 APPLICATION

A. Apply paints according to manufacturer's written instructions and recommendations in "MPI Manual."

1. Use applicators and techniques suited for paint and substrate indicated.
2. Paint surfaces behind movable items same as similar exposed surfaces. Before final installation, paint surfaces behind permanently fixed items with prime coat only.
3. Paint both sides and edges of exterior doors and entire exposed surface of exterior door frames.
4. Paint entire exposed surface of window frames and sashes.
5. Do not paint over labels of independent testing agencies or equipment name, identification, performance rating, or nomenclature plates.
6. Primers specified in painting schedules may be omitted on items that are factory primed or factory finished if acceptable to topcoat manufacturers.

B. Tint undercoats same color as topcoat, but tint each undercoat a lighter shade to facilitate identification of each coat if multiple coats of same material are to be applied. Provide sufficient difference in shade of undercoats to distinguish each separate coat.

C. If undercoats or other conditions show through topcoat, apply additional coats until cured film has a uniform paint finish, color, and appearance.

D. Apply paints to produce surface films without cloudiness, spotting, holidays, laps, brush marks, roller tracking, runs, sags, ropiness, or other surface imperfections. Cut in sharp lines and color breaks.

E. Painting Fire Suppression, Plumbing, HVAC, Electrical, Communication, and Electronic Safety and Security Work:

1. Paint the following work where exposed to view:

a. Equipment, including panelboards.
b. Uninsulated metal piping.
c. Uninsulated plastic piping.
d. Pipe hangers and supports.
e. Metal conduit.
f. Plastic conduit.
g. Tanks that do not have factory-applied final finishes.

3.4 FIELD QUALITY CONTROL

A. Dry Film Thickness Testing: Owner may engage the services of a qualified testing and inspecting agency to inspect and test paint for dry film thickness.

1. Contractor shall touch up and restore painted surfaces damaged by testing.
2. If test results show that dry film thickness of applied paint does not comply with paint manufacturer's written recommendations, Contractor shall pay for testing and apply additional coats as needed to provide dry film thickness that complies with paint manufacturer's written recommendations.

3.5 CLEANING AND PROTECTION

A. At end of each workday, remove rubbish, empty cans, rags, and other discarded materials from Project site.

B. After completing paint application, clean spattered surfaces. Remove spattered paints by washing, scraping, or other methods. Do not scratch or damage adjacent finished surfaces.

C. Protect work of other trades against damage from paint application. Correct damage to work of other trades by cleaning, repairing, replacing, and refinishing, as approved by Architect, and leave in an undamaged condition.

D. At completion of construction activities of other trades, touch up and restore damaged or defaced painted surfaces.

3.6 EXTERIOR PAINTING SCHEDULE

A. Concrete Substrates, Nontraffic Surfaces:

1. Latex System:

   a. Prime Coat: Latex, exterior, matching topcoat.
   b. Prime Coat: Primer, alkali resistant, water based, MPI #3.
   c. Intermediate Coat: Latex, exterior, matching topcoat.
   d. Topcoat: Latex, exterior flat (Gloss Level 1), MPI #10.
   e. Topcoat: Latex, exterior, low sheen (Gloss Level 3-4), MPI #15.
   f. Topcoat: Latex, exterior semi-gloss (Gloss Level 5), MPI #11.
   g. Topcoat: Latex, exterior gloss (Gloss Level 6), MPI #119.

2. Latex Aggregate/Latex System:

   a. Prime Coat: Textured coating, latex, flat, MPI #42.
   b. Intermediate Coat: Latex, exterior, matching topcoat.
   c. Topcoat: Latex, exterior flat (Gloss Level 1), MPI #10.
   d. Topcoat: Latex, exterior, low sheen (Gloss Level 3-4), MPI #15.
   e. Topcoat: Latex, exterior semi-gloss (Gloss Level 5), MPI #11.
   f. Topcoat: Latex, exterior gloss (Gloss Level 6), MPI #119.

3. High-Build Latex System: Dry film thickness not less than 10 mils (0.25 mm).

   a. Prime Coat: As recommended in writing by topcoat manufacturer.
   b. Intermediate Coat: As recommended in writing by topcoat manufacturer.
   c. Topcoat: Latex, exterior, high build, MPI #40.

4. Latex Aggregate System:

   a. Prime Coat: As recommended in writing by topcoat manufacturer.
   b. Intermediate Coat: As recommended in writing by topcoat manufacturer.
   c. Topcoat: Textured coating, latex, flat, MPI #42.

B. Concrete Substrates, Traffic Surfaces:

1. Latex Floor Paint System:

   a. Prime Coat: Floor paint, latex, low gloss (maximum Gloss Level 3), MPI #60.
   b. Intermediate Coat: Floor paint, latex, low gloss (maximum Gloss Level 3), MPI #60.
   c. Topcoat: Floor paint, latex, low gloss (maximum Gloss Level 3), MPI #60.

2. Alkyd Floor Enamel System:

   a. Prime Coat: Floor enamel, alkyd, gloss (Gloss Level 6), MPI #27.
   b. Intermediate Coat: Floor enamel, alkyd, gloss (Gloss Level 6), MPI #27.
   c. Topcoat: Floor enamel, alkyd, gloss (Gloss Level 6), MPI #27.
   d. Additive: Manufacturer's standard additive to increase skid resistance of painted surface.

3. Water-Based Clear Sealer System:

   a. Prime Coat: Sealer, water based, for concrete floors, MPI #99.
   b. Intermediate Coat: Sealer, water based, for concrete floors, MPI #99.
   c. Topcoat: Sealer, water based, for concrete floors, MPI #99.

4. Solvent-Based Clear Sealer System:

   a. Prime Coat: Sealer, solvent based, for concrete floors, MPI #104.
   b. Intermediate Coat: Sealer, solvent based, for concrete floors, MPI #104.
   c. Topcoat: Sealer, solvent based, for concrete floors, MPI #104.

C. Clay-Masonry Substrates:

1. Latex System:

   a. Prime Coat: Latex, exterior, matching topcoat.
   b. Intermediate Coat: Latex, exterior, matching topcoat.
   c. Topcoat: Latex, exterior flat (Gloss Level 1), MPI #10.
   d. Topcoat: Latex, exterior, low sheen (Gloss Level 3-4), MPI #15.
   e. Topcoat: Latex, exterior semi-gloss (Gloss Level 5), MPI #11.
   f. Topcoat: Latex, exterior gloss (Gloss Level 6), MPI #119.

2. High-Build Latex System: Dry film thickness not less than 10 mils (0.25 mm).

   a. Prime Coat: As recommended in writing by topcoat manufacturer.
   b. Intermediate Coat: As recommended in writing by topcoat manufacturer.
   c. Topcoat: Latex, exterior, high build, MPI #40.

3. Latex Aggregate System:

   a. Prime Coat: As recommended in writing by topcoat manufacturer.
   b. Intermediate Coat: As recommended in writing by topcoat manufacturer.
   c. Topcoat: Textured coating, latex, flat, MPI #42.

D. Steel Substrates:

1. Water-Based Light Industrial Coating System:

   a. Prime Coat: Primer, alkyd, anti-corrosive for metal, MPI #79.
   b. Prime Coat: Shop primer specified in Section where substrate is specified.
   c. Intermediate Coat: Light industrial coating, exterior, water based, matching topcoat.
   d. Topcoat: Light industrial coating, exterior, water based (Gloss Level 3), MPI #161.
   e. Topcoat: Light industrial coating, exterior, water based, semi-gloss (Gloss Level 5), MPI #163.
   f. Topcoat: Light industrial coating, exterior, water based, gloss (Gloss Level 6), MPI #164.

2. Alkyd System:

   a. Prime Coat: Primer, alkyd, anticorrosive for metal, MPI #79.
   b. Prime Coat: Shop primer specified in Section where substrate is specified.
   c. Intermediate Coat: Exterior alkyd enamel matching topcoat.
   d. Topcoat: Alkyd, exterior, flat (Gloss Level 1), MPI #8.
   e. Topcoat: Alkyd, exterior, semi-gloss (Gloss Level 5), MPI #94.
   f. Topcoat: Alkyd, exterior, gloss (Gloss Level 6), MPI #9.

3. Quick-Drying Enamel System:

   a. Prime Coat: Primer, alkyd, quick dry, for metal, MPI #76.
   b. Intermediate Coat: Alkyd, quick dry, matching topcoat.
   c. Topcoat: Alkyd, quick dry, semi-gloss (Gloss Level 5), MPI #81.
   d. Topcoat: Alkyd, quick dry, gloss (Gloss Level 7), MPI #96.

4. Aluminum Paint System:

   a. Prime Coat: Primer, alkyd, anti-corrosive for metal, MPI #79.
   b. Prime Coat: Shop primer specified in Section where substrate is specified.
   c. Intermediate Coat: Aluminum paint, MPI #1.
   d. Topcoat: Aluminum paint, MPI #1.

E. Galvanized-Metal Substrates:

1. Latex System:

   a. Prime Coat: Primer, galvanized, water based, MPI #134.
   b. Prime Coat: Primer, galvanized metal, as recommended in writing by topcoat manufacturer for exterior use on galvanized-metal substrates with topcoat indicated.
   c. Intermediate Coat: Latex, exterior, matching topcoat.
   d. Topcoat: Latex, exterior flat (Gloss Level 1), MPI #10.
   e. Topcoat: Latex, exterior, low sheen (Gloss Level 3-4), MPI #15.
   f. Topcoat: Latex, exterior semi-gloss (Gloss Level 5), MPI #11.
   g. Topcoat: Latex, exterior gloss (Gloss Level 6), MPI #119.

2. Water-Based Light Industrial Coating System:

    a. Prime Coat: Primer, galvanized, water based, MPI #134.
    b. Prime Coat: Primer, galvanized metal, as recommended in writing by topcoat manufacturer for exterior use on galvanized-metal substrates with topcoat indicated.
    c. Intermediate Coat: Light industrial coating, exterior, water based, matching topcoat.
    d. Topcoat: Light industrial coating, exterior, water based (Gloss Level 3), MPI #161.
    e. Topcoat: Light industrial coating, exterior, water based, semi-gloss (Gloss Level 5), MPI #163.
    f. Topcoat: Light industrial coating, exterior, water based, gloss (Gloss Level 6), MPI #164.

3. Alkyd System:

    a. Prime Coat: Primer, galvanized metal, as recommended in writing by topcoat manufacturer for exterior use on galvanized-metal substrates with topcoat indicated.
    b. Intermediate Coat: Exterior alkyd enamel matching topcoat.
    c. Topcoat: Alkyd, exterior, flat (Gloss Level 5), MPI #8.
    d. Topcoat: Alkyd, exterior, semi-gloss (Gloss Level 5), MPI #94.
    e. Topcoat: Alkyd, exterior, gloss (Gloss Level 5), MPI #9.

F. Aluminum Substrates:

1. Latex System:

    a. Prime Coat: Primer, quick dry, for aluminum, MPI #95.
    b. Intermediate Coat: Latex, exterior, matching topcoat.
    c. Topcoat: Latex, exterior flat (Gloss Level 1), MPI #10.
    d. Topcoat: Latex, exterior, low sheen (Gloss Level 3-4), MPI #15.
    e. Topcoat: Latex, exterior semi-gloss (Gloss Level 5), MPI #11.
    f. Topcoat: Latex, exterior gloss (Gloss Level 6), MPI #119.

2. Water-Based Light Industrial Coating System:

    a. Prime Coat: Primer, quick dry, for aluminum, MPI #95.
    b. Intermediate Coat: Light industrial coating, exterior, water based, matching topcoat.
    c. Topcoat: Light industrial coating, exterior, water based (Gloss Level 3), MPI #161.
    d. Topcoat: Light industrial coating, exterior, water based, semi-gloss (Gloss Level 5), MPI #163.
    e. Topcoat: Light industrial coating, exterior, water based, gloss (Gloss Level 6), MPI #164.

3. Alkyd System:

    a. Prime Coat: Primer, quick dry, for aluminum, MPI #95.
    b. Intermediate Coat: Exterior alkyd enamel matching topcoat.
    c. Topcoat: Alkyd, exterior, flat (Gloss Level 5), MPI #8.

d. Topcoat: Alkyd, exterior, semi-gloss (Gloss Level 5), MPI #94.
e. Topcoat: Alkyd, exterior, gloss (Gloss Level 5), MPI #9.

G. Stainless-Steel Substrates:

1. Latex System:

a. Prime Coat: Primer, bonding, solvent based, MPI #69.
b. Intermediate Coat: Latex, exterior, matching topcoat.
c. Topcoat: Latex, exterior flat (Gloss Level 1), MPI #10.
d. Topcoat: Latex, exterior, low sheen (Gloss Level 3-4), MPI #15.
e. Topcoat: Latex, exterior semi-gloss (Gloss Level 5), MPI #11.
f. Topcoat: Latex, exterior gloss (Gloss Level 6), MPI #119.

2. Water-Based Light Industrial Coating System:

a. Prime Coat: Primer, quick dry, for aluminum, MPI #95.
b. Intermediate Coat: Light industrial coating, exterior, water based, matching topcoat.
c. Topcoat: Light industrial coating, exterior, water based (Gloss Level 3), MPI #161.
d. Topcoat: Light industrial coating, exterior, water based, semi-gloss (Gloss Level 5), MPI #163.
e. Topcoat: Light industrial coating, exterior, water based, gloss (Gloss Level 6), MPI #164.

H. Plastic Trim Fabrication Substrates:

1. Latex System:

a. Prime Coat: Primer, bonding, water based, MPI #17.
b. Prime Coat: Primer, bonding, solvent based, MPI #69.
c. Intermediate Coat: Latex, exterior, matching topcoat.
d. Topcoat: Latex, exterior flat (Gloss Level 1), MPI #10.
e. Topcoat: Latex, exterior, low sheen (Gloss Level 3-4), MPI #15.
f. Topcoat: Latex, exterior semi-gloss (Gloss Level 5), MPI #11.
g. Topcoat: Latex, exterior gloss (Gloss Level 6), MPI #119.

2. Alkyd System:

a. Prime Coat: Primer, bonding, water based, MPI #17.
b. Prime Coat: Primer, bonding, solvent based, MPI #69.
c. Intermediate Coat: Exterior alkyd enamel matching topcoat.
d. Topcoat: Alkyd, exterior, flat (Gloss Level 5), MPI #8.
e. Topcoat: Alkyd, exterior, semi-gloss (Gloss Level 5), MPI #94.
f. Topcoat: Alkyd, exterior, gloss (Gloss Level 5), MPI #9.

I. Portland Cement Plaster Substrates:

1. Latex System:

a. Prime Coat: Latex, exterior, matching topcoat.

b. Intermediate Coat: Latex, exterior, matching topcoat.
c. Topcoat: Latex, exterior flat (Gloss Level 1), MPI #10.
d. Topcoat: Latex, exterior, low sheen (Gloss Level 3-4), MPI #15.
e. Topcoat: Latex, exterior semi-gloss (Gloss Level 5), MPI #11.
f. Topcoat: Latex, exterior gloss (Gloss Level 6), MPI #119.

2. Latex over Alkali-Resistant Primer System:

a. Prime Coat: Primer, alkali resistant, water based, MPI #3.
b. Intermediate Coat: Latex, exterior, matching topcoat.
c. Topcoat: Latex, exterior flat (Gloss Level 1), MPI #10.
d. Topcoat: Latex, exterior, low sheen (Gloss Level 3-4), MPI #15.
e. Topcoat: Latex, exterior semi-gloss (Gloss Level 5), MPI #11.
f. Topcoat: Latex, exterior gloss (Gloss Level 6), MPI #119.

3. High-Build Latex System: Dry film thickness not less than 10 mils (0.25 mm).

a. Prime Coat: As recommended in writing by topcoat manufacturer.
b. Intermediate Coat: As recommended in writing by topcoat manufacturer.
c. Topcoat: Latex, exterior, high build, MPI #40.

END OF SECTION 09911

PART 1 - GENERAL

1.1 RELATED DOCUMENTS

A. Drawings and general provisions of the Contract, including General and Supplementary Conditions and Division 01 Specification Sections, apply to this Section.

1.2 SUMMARY

A. Section includes surface preparation and application of high-performance coating systems**.** on the following substrates:

1. Exterior Substrates:
   a. Steel.

B. Related Requirements:

1. Section 05120 "Structural Steel" for shop priming of metal substrates with primers specified in this Section.
2. Section 09911 "Exterior Painting" for special-use coatings and general field painting.

1.3 DEFINITIONS

A. Gloss Level 6: 70 to 85 units at 60 degrees, according to ASTM D 523.

B. Gloss Level 7: More than 85 units at 60 degrees, according to ASTM D 523.

1.4 ACTION SUBMITTALS

A. Product Data: For each type of product indicated. Include preparation requirements and application instructions.

B. Samples for Initial Selection: For each type of topcoat product indicated.

C. Samples for Verification: For each type of coating system and in each color and gloss of topcoat indicated.

1. Submit Samples on rigid backing, 8 inches (200 mm) square.
2. Step coats on Samples to show each coat required for system.
3. Label each coat of each Sample.
4. Label each Sample for location and application area.

D. Product List: For each product indicated, include the following:

1. Cross-reference to paint system and locations of application areas. Use same designations indicated on Drawings and in schedules.
2. Printout of current "MPI Approved Products List" for each product category specified in Part 2, with the proposed product highlighted.
   .

1.5 MAINTENANCE MATERIAL SUBMITTALS

A. Furnish extra materials, from the same product run, that match products installed and that are packaged with protective covering for storage and identified with labels describing contents.

1. Coatings: 5 percent, but not less than 1 gal. (3.8 L) of each material and color applied.

1.6 QUALITY ASSURANCE

A. Mockups: Apply mockups of each coating system indicated to verify preliminary selections made under sample submittals and to demonstrate aesthetic effects and set quality standards for materials and execution.

1. Architect will select one surface to represent surfaces and conditions for application of each coating system specified in Part 3.

a. Wall and Ceiling Surfaces: Provide samples of at least 100 sq. ft. (9 sq. m).
b. Other Items: Architect will designate items or areas required.

2. Final approval of color selections will be based on mockups.

a. If preliminary color selections are not approved, apply additional mockups of additional colors selected by Architect at no added cost to Owner.

3. Approval of mockups does not constitute approval of deviations from the Contract Documents contained in mockups unless Architect specifically approves such deviations in writing.
4. Subject to compliance with requirements, approved mockups may become part of the completed Work if undisturbed at time of Substantial Completion.

1.7 DELIVERY, STORAGE, AND HANDLING

A. Store materials not in use in tightly covered containers in well-ventilated areas with ambient temperatures continuously maintained at not less than 45 deg F (7 deg C).

1. Maintain containers in clean condition, free of foreign materials and residue.
2. Remove rags and waste from storage areas daily.

1.8 FIELD CONDITIONS

A. Apply coatings only when temperature of surfaces to be coated and surrounding air temperatures are between 50 and 95 deg F (10 and 35 deg C).

B. Do not apply coatings when relative humidity exceeds 85 percent; at temperatures less than 5 deg F (3 deg C) above the dew point; or to damp or wet surfaces.

C. Do not apply exterior coatings in snow, rain, fog, or mist.

PART 2 - PRODUCTS

2.1 MANUFACTURERS

A. <Double click here to find, evaluate, and insert list of manufacturers and products.>

2.2 HIGH-PERFORMANCE COATINGS, GENERAL

A. MPI Standards: Provide products that comply with MPI standards indicated and are listed in "MPI Approved Products List."

B. Material Compatibility:

1. Provide materials for use within each coating system that are compatible with one another and substrates indicated, under conditions of service and application as demonstrated by manufacturer, based on testing and field experience.
2. For each coat in a coating system, provide products recommended in writing by manufacturers of topcoat for use in coating system and on substrate indicated.
3. Provide products of same manufacturer for each coat in a coating system.

C. Colors: As selected by Architect from manufacturer's full range.

2.3 METAL PRIMERS

A. Primer, Zinc-Rich, Inorganic: MPI #19.

1. METALHIDE One-Pac inorganic Zinc Rich Primer 97-676

2. Or Equal

2.4 SOURCE QUALITY CONTROL

A. Testing of Coating Materials: Owner reserves the right to invoke the following procedure:

1. Owner will engage the services of a qualified testing agency to sample coating materials. Contractor will be notified in advance and may be present when samples are taken. If coating materials have already been delivered to Project site, samples may be taken at Project site. Samples will be identified, sealed, and certified by testing agency.
2. Testing agency will perform tests for compliance with product requirements.
3. Owner may direct Contractor to stop applying paints if test results show materials being used do not comply with product requirements. Contractor shall remove noncomplying coating materials from Project site, pay for testing, and recoat surfaces coated with rejected materials. Contractor will be required to remove rejected materials from previously coated surfaces if, on recoating with complying materials, the two coatings are incompatible.

PART 3 - EXECUTION

3.1 EXAMINATION

A. Examine substrates and conditions, with Applicator present, for compliance with requirements for maximum moisture content and other conditions affecting performance of the Work.

1. Maximum Moisture Content of Substrates: When measured with an electronic moisture meter as follows:

a. Concrete: 12 percent.
b. Masonry (Clay and CMU): 12 percent.
c. Wood: 15 percent.
d. Gypsum Board: 12 percent.

B. Verify suitability of substrates, including surface conditions and compatibility with existing finishes and primers.

C. Proceed with coating application only after unsatisfactory conditions have been corrected.

1. Beginning coating application constitutes Contractor's acceptance of substrates and conditions.

3.2 PREPARATION

A. Comply with manufacturer's written instructions and recommendations in "MPI Architectural Painting Specification Manual" applicable to substrates indicated.

B. Remove hardware, covers, plates, and similar items already in place that are removable and are not to be painted. If removal is impractical or impossible because of size or weight of item, provide surface-applied protection before surface preparation and painting.

1. After completing painting operations, use workers skilled in the trades involved to reinstall items that were removed. Remove surface-applied protection.

C. Clean substrates of substances that could impair bond of coatings, including dust, dirt, oil, grease, and incompatible paints and encapsulants.

1. Remove incompatible primers and reprime substrate with compatible primers or apply tie coat as required to produce coating systems indicated.

D. .

1. Clean surfaces with pressurized water. Use pressure range of 100 to 600 psi (690 to 4140 kPa) at 6 to 12 inches (150 to 300 mm).

E. Shop-Primed Steel Substrates: Clean field welds, bolted connections, and abraded areas of shop paint, and paint exposed areas with the same material as used for shop priming to comply with SSPC-PA 1 for touching up shop-primed surfaces.

3.3 APPLICATION

A. Apply high-performance coatings according to manufacturer's written instructions and recommendations in "MPI Architectural Painting Specification Manual."

1. Use applicators and techniques suited for coating and substrate indicated.
2. Coat surfaces behind movable equipment and furniture same as similar exposed surfaces. Before final installation, coat surfaces behind permanently fixed equipment or furniture with prime coat only.
3. Coat back sides of access panels, removable or hinged covers, and similar hinged items to match exposed surfaces.
4. Do not apply coatings over labels of independent testing agencies or equipment name, identification, performance rating, or nomenclature plates.

B. Tint each undercoat a lighter shade to facilitate identification of each coat if multiple coats of the same material are to be applied. Tint undercoats to match color of finish coat, but provide sufficient difference in shade of undercoats to distinguish each separate coat.

C. If undercoats or other conditions show through final coat, apply additional coats until cured film has a uniform coating finish, color, and appearance.

D. Apply coatings to produce surface films without cloudiness, spotting, holidays, laps, brush marks, runs, sags, ropiness, or other surface imperfections. Produce sharp glass lines and color breaks.

3.4 FIELD QUALITY CONTROL

A. Dry Film Thickness Testing: Owner will engage the services of a qualified testing and inspecting agency to inspect and test coatings for dry film thickness.

1. Contractor shall touch up and restore coated surfaces damaged by testing.
2. If test results show that dry film thickness of applied coating does not comply with coating manufacturer's written recommendations, Contractor shall pay for testing and apply additional coats as needed to provide dry film thickness that complies with coating manufacturer's written recommendations.

3.5 CLEANING AND PROTECTION

A. At end of each workday, remove rubbish, empty cans, rags, and other discarded materials from Project site.

B. After completing coating application, clean spattered surfaces. Remove spattered coatings by washing, scraping, or other methods. Do not scratch or damage adjacent finished surfaces.

C. Protect work of other trades against damage from coating operation. Correct damage by cleaning, repairing, replacing, and recoating, as approved by Architect, and leave in an undamaged condition.

D. At completion of construction activities of other trades, touch up and restore damaged or defaced coated surfaces.

3.6 EXTERIOR HIGH-PERFORMANCE COATING SCHEDULE

A. Steel Substrates: Contractor to provide recommendation. To be approved by architect.

1. Pigmented Polyurethane over Inorganic Zinc-Rich Primer and High-Build Epoxy System:

a. Prime Coat: Primer, zinc-rich, inorganic[, MPI #19].
b. Intermediate Coat: Epoxy, high-build, low gloss[, MPI #108].
c. Topcoat: Polyurethane, two-component, pigmented, gloss (Gloss Level 6)[, MPI #72].

END OF SECTION 09960

PART 1 - GENERAL

1.1 RELATED DOCUMENTS

A. Drawings and general provisions of the Contract, including General and Supplementary Conditions and Division 01 Specification Sections, apply to this Section.

1.2 SUMMARY

A. Section includes seating preparation and installation requirements.

B. Related Requirements:

1. Section 03301 "Miscellanous Cast-in-Place Concrete" for cast-in-place concrete, including reinforcement, concrete materials, mixture design, placement procedures, and finishes.

1.3 REFERENCES

A. ASTM Testing Standards:

1. ASTM B 117 – Standard Practice for Operating Salt Spray (Fog) Apparatus.
2. ASTM D 522 – Standard Test Methods for Mandrel Bend Test of Attached Organic Coatings.
3. ASTM D 523 – Standard Test Method for Specular Gloss.
4. ASTM D 2247 – Standard Practice for Testing Water Resistance of Coatings in 100% Relative Humidity.
5. ASTM D 2794 – Standard Test Method for Resistance of Organic Coatings to the Effects of Rapid Deformation (Impact).
6. ASTM D 3359 – Standard Test Methods for Measuring Adhesion by Tape Test.
7. ASTM D 3363 – Standard Test Method for Film Hardness by Pencil Test.
8. ASTM G 155 – Standard Practice for Operating Xenon Arc Light Apparatus for Exposure of Non-Metallic Materials.

B. ISO Testing Standards

1. ISO 1520 – Paints and Varnishes – Cupping Test.
2. ISO 2815 – Paints and Varnishes – Buchholz Indentation Test.'

C. ANSI/BIFMA Testing Standards:

1. ANSI/BIFMA X5.4-2005 – Standard Test for Lounge Seating.

1.4 COORDINATION

A. Coordinate layout and installation of electrical wiring and devices with seating layout to ensure that junction boxes for electrical devices are accurately located to allow connection without exposed conduit.

B. Coordinate anchoring method with structural drawings to ensure proper adherence.

1.5 SUBMITTALS

A. Product Data: Submit manufacturer's product data, storage and handling requirements and recommendations, installation methods and available colors, styles, patterns and textures.

B. Shop Drawings: Submit manufacturer's shop drawings, including plans and elevations, indicating overall dimensions

C. Samples: Submit manufacturer's samples of materials, finishes, and colors.

D. Warranty: Manufacturer's standard warranty.

1.6 QUALITY ASSURANCE

A. Installer Qualifications: An authorized representative who is trained an approved by manufacturer.

1.7 DELIVERY, STORAGE, AND HANDLING

A. Delivery: Deliver materials to site in manufacturer's original, unopened containers and packaging, with labels clearly identifying product name and manufacturer.

B. Storage: Store materials in clean, dry area in accordance with manufacturer's instructions. Keep materials in manufacturer's original, unopened containers and packaging until installation.

C. Handling: Protect materials and finish during handling and installation to prevent damage.

1.8 FIELD CONDITIONS

A. Apply paints only when temperature of surfaces to be painted and ambient air temperatures are between 50 and 95 deg F (10 and 35 deg C).

B. Do not apply paints in snow, rain, fog, or mist; when relative humidity exceeds 85 percent; at temperatures less than 5 deg F (3 deg C) above the dew point; or to damp or wet surfaces.

PART 2 - PRODUCTS

2.1 MANUFACTURERS

A. Basis of Design
1. Landscape Forms, Inc., 7800 E. Michigan Ave, Kalamazoo, Michigan 49048.
Phone: (800) 521-2546. Fax (269) 381-3455.
Website www.landscapeforms.com
E-mail: specify@landscapeforms.com

B. Equal to be verified and approved by Architect.

2.2 BENCHES

A. Style: Austin
1. Backed:
a. Depth: 24 inches
b. Overall Height: 33 inches
c. Arm Height: 25.5 inches
d. Length: 72 inches
2. Mounting:
a. Cantilevered: Surface mount only
3. Option:
a. No arms

B. Style: Equal (To be approved by Architect)
1. Backed:
a. Depth: 24 inches
b. Overall Height: 33 inches
c. Arm Height: 25.5 inches
d. Length: 72 inches
2. Mounting:
a. Cantilevered: Surface mount only
3. Option:
a. No arms

C. Colors: As selected by Architect from manufacturer's full range.

2.3 MATERIALS

A. Seat and back panels
1. Aluminum: Extruded aluminum boards for the face and interior seats are clear anodized (202-R1) and powder coated

B. Frame, Legs, and Arms
1. Supports: Cast ductile iron
2. End caps, back straps and arm rests: 319 cast aluminum

2.4 ACCESSORIES

A. Anchor Bolts: ½ DIA. Titen HD with 3 ¼" minimum embedment or per manufacturer's recommendation.

2.5 RECYCLED CONTENT

A. Recycled Material Content: Minimum 48 percent.

B. Post-Consumer Material Content: Minimum 26 percent

C. Pre-Consumer Material Content: Minimum 22 percent

D. Recyclable: 100 percent

2.6 Fabrication

A. Assembly: Shop assembled benches.

2.7 FINISHES

A. Landscape Forms, Inc. "Pangard II" or Equal
   1. Primer: Rust inhibitor on ferrous supports.
   2. Topcoat: Thermosetting TGIC polyester powder coat.
      a. UV, chip,, and flake resistant

PART 3 - EXECUTION

3.1 EXAMINATION

A. Site Examinations: Examine areas to receive benches
   1. Verify that substrates are stable and capable of supporting the weight of items covered under this section.
   2. Verify that substrates have been adequately prepared to securely anchor those items that will be surface mounted.
   3. Notify Architect of conditions that would adversely affect installation or subsequent use.
   4. Do not begin installation until unacceptable conditions are corrected.

3.2 INSTALLATION

A. Install benches in accordance with manufacturer's instructions at locations indicated on the Drawings.

B. Install benches level.

3.3 ADJUSTING

A. Finish Damage: repair minor damages to finish in accordance with manufacturer's instructions and as approved by architect.

B. Component Damage: Remove and replace damaged components that cannot be successfully repaired as determined by Architect.

3.4 CLEANING

A. Clean benches promptly after installation in accordance with manufacturer's instructions and as approved by architect.

B. Do not use harsh cleaning materials or methods that could damage finish.

3.5 PROTECTION

A. Protect installed benches to ensure that, except for normal weathering, benches will be without damage or deterioration at time of Substantial Completion.

END OF SECTION 129343

PART 1 - GENERAL

1.1 RELATED DOCUMENTS

A. Drawings and general provisions of Contract, including General Conditions, Coordination and Meetings, Submittals, Quality Control, Starting of Systems, Contract Close-out.

1.2 SUMMARY

A. The work covered by the electrical specifications shall include the furnishing of all materials, labor, transportation, tools, permits, fees, utilities, and incidentals necessary for the complete installation of all electrical work required in the contract documents and specified herein. The intent of the contract documents is to provide an installation complete in every respect. In the event that additional details of special construction may be required for the work indicated or specified in this section or work specified in other sections. It shall be the responsibility of the Contractor to provide all material and equipment which is usually furnished with such systems in order to complete the installation, whether mentioned or not.

B. The Contractor shall be responsible for the coordination and proper relation of his work to the structures and to the exact location of all utilities work of all trades. The Contractor shall visit the site and thoroughly familiarize himself with the existing site conditions, and all details of the work and the working conditions and to verify all dimensions in the field. The Contractor shall advise the Architect of any discrepancy prior to bidding. The submission of bids shall be deemed evidence of the Contractors site visit, the coordination of all existing conditions, and the inclusion of all consideration for existing conditions.

1.3 DRAWINGS AND SPECIFICATIONS

A. These specifications are accompanied by the contract drawings and details of the installations indicating the locations of equipment, piping, outlets, light fixtures, controls, receptacles, circuits, lines, etc. The contract drawings and these specifications are complementary to each other, and what is required by one shall be as binding as if required by both.

B. If any departures from the construction contract documents are deemed necessary by the Contractor, details of such departures and the reasons therefore shall be submitted in writing to the Architect for review and approval. No departures shall be made without prior written approval of the Architect.

C. Should the contract documents disagree in themselves, or with the specifications, the better quality or greater quantity of work shall be estimated upon, and unless otherwise directed by the Architect in writing, shall be performed or furnished. Figures indicated on drawings govern scale measurements and large scale details govern small scale drawings. In case of disagreement between specifications and drawings, see DIVISION 1 of these specifications for clarification.

D. Items specifically mentioned in the specifications but not shown on the contract drawings and/or items shown on the contract drawings but not specifically mentioned in the specifications shall be installed by the Contractor under the appropriate section of work as if they were both specified and shown.

1.4 CODE REQUIREMENTS

A. All work shall comply with the applicable rules and regulations of the National Electrical Code, the National Electrical Safety Code, the National Fire Codes (published by National Fire Protection Association), the City of Austin Electrical Codes and Ordinances, American Disabilities Act, and the terms and conditions of services of the electrical utility, as well as any other authorities that may have lawful jurisdiction pertaining to the work specified. None of the terms or provisions of this specification shall be construed as waiving any of the rules, regulations, or requirements of these authorities.

B. The Contractor shall resolve any code violation discovered in the contract documents with the Architect prior to award of the contract.

1.5 PERMITS

A. Contractor shall obtain all permits and inspections applicable to the trade. Refer to Division 1 for further information regarding payment.

1.6 CONTRACTOR QUALIFICATIONS

A. An acceptable contractor for the work under this division shall be a specialist in this field and have the personal experience, training, skill and the organization to provide a practical working system. If required, he shall be able to furnish acceptable evidence of having contracted for and installed not less than three systems of comparable size and type to this one, that have served their owners satisfactorily for not less than three years.

B. The foreman for this work shall have had experience in installing not less than three such systems and shall be approved before the work is begun. Adequate and competent supervision shall be provided to ensure first class workmanship and installation.

C. Work shall be executed and all materials installed in accordance with the best practice of the trades in a thorough, substantial, workmanlike manner by competent workmen, presenting a neat appearance when completed. Work shall be performed by workmen skilled in the trade.

D. The Contractor shall be responsible for all construction techniques required for all electrical systems specified and shown on the drawings.

1.7 SHOP DRAWINGS AND PRODUCT DATA

A. This section includes general administrative and procedural requirements for electrical installations. The following administrative and procedural requirements are included in this section to expand the requirements specified in Series 0.
1. Submittals.
2. Coordination drawings.
3. Record documents.
4. Maintenance manuals.

B. Data Required. Submit shop drawings and product data as specified in Series 0 General Requirements. Submittal data must show manufacturer's name, published ratings or capacity data, detailed equipment drawings for fabricated items, panel diagrams, wiring diagrams, installation instructions and other pertinent data. Where literature is submitted covering a group or series of similar items, the applicable items must be clearly indicated. All shop drawings shall be clearly marked highlighting all proposed equipment and devices to be used in this project. Shop drawing submittals that do not comply with this

requirement will be returned without review. All shop drawings and product data submitted for approval that have not been checked and signed by the Contractor will be returned for checking before being considered. Shop drawings shall note all deviations from contract documents.

C. Shop drawing review is only for general conformance with design concept of project and general compliance with the contract documents. The Contractor is responsible for conforming and correlating equipment dimensions at job site; for information which pertains to fabrication processes or construction techniques; and for coordination of work of all trades. Review of shop drawings shall not relieve the Contractor, any Subcontractor, and/or material supplier of responsibility for deviation from requirements of contract documents nor errors of omissions in shop drawings.

D. Contractor's Check. Shop drawings will be submitted only by the Contractor. Indicate by signed stamp that the drawings have been checked, that the work shown on the drawings is in accordance with contract requirements and that dimensions and relationship with work of other trades have been checked. If drawings are submitted for approval that have not been checked and signed by the Contractor, they will be returned for checking before being considered by the Architect.

E. Engineer's approval of submitted material constitutes an acknowledgement only and in no way relieves the contractor of full responsibility for providing all systems complete in accordance with the intent of the drawings and specifications. Contractor is responsible for confirming and correlating dimensions at job site, for information which pertains to fabrication processes or construction techniques and for coordination of work with all other trades. Any materials or equipment provided by this contractor without approved shop drawings constitutes the contractor's agreement to comply with the engineer's intent whether specified, shown or implied.

F. Form of Submittal. Submit data for review before placing purchase orders. Organize data in a 3-ring binder indexed by specification reference. Show any revisions to equipment layouts required by use of selected equipment.

G. Submittal Items. Submittals are required for, but not limited to, the following items:
1. Shop Drawings.
   a. Lighting controls
2. Product Data.
   a. Boxes
   b. Grounding materials and equipment
   c. Lighting fixtures, including drivers
   d. Raceways
   e. Conductors
   f. Wiring devices
   g. Pullboxes

D. Manufacturer's Certification. Each manufacturer is required to review the system design as related to the proper operation of his equipment, including electrical requirements, automatic controls, equipment, locations and related items. With shop drawings submit a letter from the manufacturer stating that his equipment will operate satisfactorily under the design conditions. The manufacturer will also be required to review the final installation at the site and submit a second letter stating that the installation conforms to the design criteria and that the equipment will operate satisfactorily as installed.

1.8 SUBSTITUTIONS

A. Products List. Within 30 days after contract date, submit to Architect a complete list of major products proposed to be used, with the name of the manufacturer and the installing subcontractor.

B. Contractor's Options.
1. For products specified only by reference standard, select any product meeting that standard.
2. For products specified by naming several products or manufacturers, select any one of the products or manufacturers named, which complies with the specifications.
3. For products specified by naming one or more products or manufacturers and "or equal," Contractor must submit a request for substitutions for any product or manufacturer not specifically named.
4. For products specified by naming only one product and manufacturer, there is no option.

C. Substitution Standards. Manufacturers' names and catalog numbers specified under sections of Division 16 are used to establish standards of design, performance, quality and serviceability and not to limit competition, nor to discriminate against an "approved equal" product made by other manufacturer. Equipment of design equal to that specified will be acceptable upon approval by the Engineer. Provide itemized cost list for the proposed product substitutions indicating savings and/or additional cost. There will be no exceptions to this requirement. Submit complete design and performance data to the Architect.

D. The specified products have been used in preparing the drawings and specifications, and thus, establish the minimum qualities which substitutes must meet to be acceptable. The burden of proof of quality rests with the bidder.

E. Architect shall be the judge of the acceptability of the proposed substitution.

1.9 COORDINATION DRAWINGS

A. Prepare coordination drawings in accordance to a scale of 1/4"=1'-0" or larger; detailing major elements, components, and systems of electrical equipment and materials in relationship with other systems, installations, and building components. Indicate locations where space is limited for installation and access and where sequencing and coordination of installations are of importance to the efficient flow of the Work, including (but not necessarily limited to) the following:
1. Indicate the proposed locations of major raceway systems, equipment, and materials.
2. Indicate scheduling, sequencing, movement, and positioning of large equipment into place during construction.
3. Prepare plans, elevations, and details to indicate penetrations in slabs and walls, and their relationship to other penetrations and installations.

1.10 RECORD DOCUMENTS

A. Prepare record documents in accordance with the requirements in Series 0. In addition to the requirements specified in Series 0, indicate the following installed conditions:
1. Major raceway systems, size and location; locations of control devices, distribution and branch electrical circuitry, and fuse and circuit breaker size and arrangements.
2. Equipment locations dimensioned from prominent structural lines.
3. Approved substitutions, Contract Modifications, and actual equipment and materials installed.

B. Engage the services of a Land Surveyor or Professional Engineer registered in Texas and as specified herein to record the locations and elevations of underground installations.

C. The Contractor shall maintain a set of clearly marked black line record "AS-BUILT" prints on the job site on which he shall mark all work details, alterations to meet site conditions and changes made by "Change Order" notices. These shall be kept available for inspection by the Owner, Architect or Engineer at all times.

D. Refer to Series 0 for additional requirements concerning record drawings. If the Contractor does not keep an accurate set of as-built drawings, the pay request may be altered or delayed at the request of the Architect. Mark the drawings with a colored pencil. Delivery of as-built prints and reproducibles is a condition of final acceptance.

E. The record prints shall be updated on a daily basis and shall indicate accurate dimensions for all buried or concealed work, precise locations of all concealed conduit, duct banks, controls, Panelboards, transformers, switches and devices, and any deviations from the work shown on the Construction Documents which are required for coordination. All dimensions shall include at least two dimensions to permanent structure points.

F. At the Engineer's option, the Contractor shall transfer all data from the record "AS-BUILT" prints to an electronic media such as AutoCad in order to plot the reproducible media "AS-BUILT" drawings. Engineer shall furnish to the Contractor electronic media files of Contract Documents for the Contractor to use for inputting of the data from the record "AS-BUILT" prints and the Contractor shall return the revised electronic files to the Engineer and shall submit the plotted reproducible drawings and three (3) sets of prints to the Architect or Engineer for review prior to scheduling the final inspection at the completion of the work. The reproducible record "AS-BUILT" drawings shall have the Engineers Name and Seal removed or blanked out and shall be clearly marked and signed on each sheet as described in paragraph G. below.

G. When the option described in paragraph F., above is not exercised then upon completion of the work, the Contractor shall transfer all marks from the submit a set of reproducible record "AS-BUILT" drawings using and shall submit the reproducible drawings and three (3) sets of prints to the Architect or Engineer for review prior to scheduling the final inspection at the completion of the work. The reproducible record "AS-BUILT" drawings shall have the Engineers Name and Seal removed or blanked out and shall be clearly marked and signed on each sheet as follows:

CERTIFIED RECORD DRAWINGS

DATE:

(NAME OF GENERAL CONTRACTOR)

BY:_____
(SIGNATURE)

(NAME OF SUBCONTRACTOR)

BY:_____

(SIGNATURE)

PART 2 - PRODUCTS

2.1 CONSTRUCTION MATERIALS

A. All materials and equipment must be new, and shall conform to the National Electrical Code. All materials and equipment shall be listed, inspected, and approved by the Underwriters Laboratories and shall bear the U.L. label where labeling service is available. The label or listing of the Underwriters Laboratories, Inc., will be accepted as evidence that the materials or equipment conform to the applicable standards of that agency.

2.2 STANDARD PRODUCTS

A. Furnish new and unused materials and equipment of domestic manufacturers meeting the requirements of these specifications. All materials and equipment shall be standard catalog products of manufacturers regularly engaged in the manufacture of products conforming to these specifications. Materials and equipment shall have been in satisfactory use at least two years prior to bid opening. Where custom or special items are required, these shall be fully described by shop drawings, which fully describe in detail the item proposed for use on this project.

B. The Contractor is fully responsible for furnishing the proper electrical equipment and/or material and for seeing that it is installed as intended by the manufacturer written instructions. If needed for proper installation, operation, or startup, the Contractor shall request advice and supervisory assistance from the representative of the specific manufacturer. The manufacturers' published instructions shall be followed for preparing, assembling, installing, erecting, and cleaning manufactured materials or equipment, unless otherwise indicated. The Contractor shall promptly notify the Architect in writing of any conflict between the requirements of the contract documents and the manufacturer's directions and shall obtain the Architect's instructions before proceeding with the work. Should the Contractor perform any such work that does not comply with the manufacturer's directions or such instructions from the Architect, he shall bear all costs arising in connection with the deficiencies.

C. Space Limitations. Equipment selected must conform to the building features and must be coordinated with them. Do not provide equipment which will not suit arrangement and space limitations.

2.3 RUST PREVENTION

A. All metallic materials shall be protected against corrosion. Exposed metallic parts of outdoor apparatus shall be given a rust-inhibiting treatment and standard finish by the manufacturer. All parts such as boxes, bodies, fittings, guards, and miscellaneous parts shall be protected in accordance with the ASTM A123 or A153, except where other equivalent protective treatment is specifically approved in writing.

2.4 DELIVERY AND STORAGE

A. The Contractor shall not receive any equipment at the jobsite until ready for installation or until there is suitable space provided to properly protect equipment from rust, weather, humidity, dust, or physical damage.

B. All delivered equipment shall be protected in accordance with the manufacturer's recommendations and the requirements of NFPA 70B, Appendix I, titled "Equipment

Storage and Maintenance During Construction." The Contractor shall replace with new equipment all damaged or defective equipment.

C. All equipment injured or damaged in transit from factory, during delivery to premises, while in storage on premises, while being erected and installed, and while being tested, until time of final completion, shall be replaced by this Contractor without extra cost to Owner.

2.5 CAPACITIES

A. Capacities shall be not less than those indicated but shall be such that no component or system becomes inoperative or is damaged because of start-up or other overload conditions. Where approved equipment requires electrical power other than those used for design purposes, the Contractor shall be responsible to adjust protective devices, starter sizes, conductors, conduits, etc., to accommodate this approved device electrically.

PART 3 - EXECUTION

3.1 PROTECTION OF EQUIPMENT

A. Moisture. During construction, protect panelboards, control equipment, and other items from insulation moisture absorption and metallic component corrosion by appropriate use of strip heaters, lamps or other suitable means. Apply protection immediately on receiving the products and maintain continually.

B. Clean. Keep products clean by elevating above ground and by using suitable coverings.

C. Damage. Take such precautions as are necessary to protect apparatus and materials from damage. Failure to protect materials is sufficient cause for rejection of the apparatus or material in question.

D. Finish. Protect factory finish from damage during construction operations and until acceptance of the project. Satisfactorily restore any finishes that become stained or damaged.

3.2 INSTALLATION

A. Cooperation with trades of adjacent, related or affected materials or operations, and of trades performing continuations of this work under subsequent contracts, is considered a part of this work in order to effect timely and accurate placing of work and to bring together, in proper and correct sequence, the work of such trades.

B. Workmanship. Work must be completed by workmen skilled in their trade. The installation must be complete whether the work is concealed or exposed.

C. Existing Structural Components. Contractor shall take all means necessary so that work will not compromise integrity of existing structural components; specifically work in existing Parking Garage structure.

D. Setting of Equipment. Equipment must be leveled and set plumb. Sheet metal enclosures mounted against a wall must be separated from the wall not less than 1/4-inch by means of corrosion-resistant spacers or by 3 -inches of air for freestanding units. Use corrosion-resistant bolts, nuts and washers to anchor equipment. In sufficient time to be

coordinated with work of others, provide drawings and layout work showing exact size and location of sleeves, openings or inserts for electrical equipment in slabs and walls.

E. Supporting of Equipment. Contractor shall be responsible for the design and installation of racks and pads to sufficiently support electrical equipment provided in this Contract, and shall provide all necessary materials for a complete installation.

F. Sealing of Equipment. Permanently seal outdoor equipment at the base using concrete grout. Seal or screen openings into equipment to prevent entrance of animals, birds and insects. Use galvanized steel or copper mesh with openings not larger than 1/16-inch for screened openings. Seal small cracks and openings from the inside with silicon sealing compound.

3.3 OPERATION AND MAINTENANCE INSTRUCTIONS

A. Owner's Manual. Collect and submit in 3-ring binders 3 sets of product data, shop drawings, wiring diagrams, instructions and parts lists for operating and maintaining equipment and systems installed as electrical work. Include in the instructions a description of normal adjustments and a list of items to be lubricated. Specify the type and frequency of lubrication required. For the Owner's use, provide special servicing tools as required for this equipment. Deliver manuals and tools to the Architect as a condition of final acceptance. The Owner's manual shall include:
1. Complete electrical submittals as approved.
2. Manufacturer's installation instruction brochures.
3. Manufacturer's local representative and/or distributor's name and address.
4. Manufacturer's operating and maintenance brochures.
5. Manufacturer's internal wiring diagram.
6. Contractor's installation wiring diagram.
7. Control system installation drawings.
8. Replacement part number listings and/or descriptions.
9. Framed operating instructions when required.
10. A final electrical distribution one-line diagram with all pertinent information regarding work performed, including capacities, sizes, feeder sizes, etc.
11. Manufacturer's warranties and guarantees.

B. This manual shall include all of the fisted data bound into a permanent hard-back binder identified on the cover as "Operating and Maintenance Manual" with additional cover display of the names and location of Building, the Owner, the Architect, the Engineers, the General Contractor, and the Contractors installing equipment represented in the brochure.

C. Contents of the manual shall be grouped in sections according to the various sections of Division 16, and shall be listed in a Table of Contents, preceded by a copy of these pages of these Specifications. Sections shall be organized as follows:
1. Each "tab" in the brochure shall identify the grouping of all literature required for a single class of equipment, i.e., "lighting fixtures", "gear", etc., for all types of equipment on the job. In addition include specification section or drawing sheet number.
2. Contents under each "tab" shall be refer to a single class of equipment, and shall be arranged in the following sequence: First, the approved engineering submittals with complete performance and technical data; second, the manufacturer's installation brochure; third, the manufacturer's operating and maintenance brochure- fourth, the manufacturer's installation wiring diagram; fifth, the Contractor's field wiring diagram; if different, and sixth, the manufacturer's brochure listing replacement part numbers and description.

3. Provide final tab "Warranties and Guarantees" behind which all such items will be located.

D. Operation. Upon completion of the work and at a time designated by the Architect, instruct the Owner's operating personnel in operation and maintenance of electrical equipment and systems. Before proceeding with instruction, prepare a typed outline in triplicate listing the subjects that will be covered. Submit the outline for review by the Architect. At the conclusion of the instruction, obtain the signatures of the people instructed on each copy of the outline to signify that they have a proper understanding of the operation and maintenance of the system. Submit the signed outlines to the Architect as a condition of final acceptance. Provide a minimum of 8 hours of general instruction in addition to any time specified in other sections of Division 16.

3.4 HOISTING, SCAFFOLDING, AND TRANSPORTATION

A. The Contractor shall provide his own hoisting facilities to set his materials and equipment in place, as indicated on drawings.

B. The Contractor shall provide his own scaffolding, ladders, etc., to facilitate the installation of items which cannot otherwise be reached.

C. The Contractor shall provide necessary transportation to facilitate the delivery of all materials, equipment, tools, and labor to job, in accordance with intent of these documents.

3.5 CLEANING

A. The Contractor shall, at all times, keep the premises free from accumulations of waste material or rubbish caused by him, his employees, or his work. This debris shall be removed, not only from the building, but also from the site and from any street or alley adjacent to the site.

B. At completion of the project, the Contractor shall remove all of his tools, scaffolding, and surplus materials. He shall leave the area "broom clean." Before final acceptance, vacuum all panels, and other electrical devices. Wipe clean all fixture lens and reflectors, all panelboards interior and exterior surfaces, being careful to remove all stray paint and construction materials, dust and particles. Touch up all marred surfaces to restore existing conditions to those provided by the manufacturer.

3.6 COORDINATION WITH OTHER TRADES

A. Contractor shall coordinate with other divisions as required to verify all electrical requirements of those division(s). This is to include but not be limited to verification of power, voltage, phase and other characteristics as being compatible with that called for on the electrical drawings and Division 16 specifications, as well as that called for in other divisions requiring electrical connections. This shall be done prior to placing orders for equipment or material, and prior to any rough-in, etc.

3.7 TESTS

A. Tests to be completed by the Contractor shall be of two types. During construction, system testing shall be accomplished to determine whether systems are suitably wired, or if systems operated as prescribed. Later, demonstration testing shall be accomplished for the purpose of showing that the systems operated as designed.

1. Following each system test, a certified record of each test shall be made, giving the results of the test, and the persons conducting and/or witnessing the test to the Engineer for review.
2. When performing demonstration testing, the Contractor shall make a similar certificate of the test, but this test shall be witnessed by the Architect or his representative. These certificates will require being signed by the person conducting and witnessing the test. Demonstration tests will not be considered completed unless such a signed certificate is provided on each item here-in-after mentioned. Other items may be added by the Architect depending on the items being installed.
3. The Contractor shall provide all test equipment, temporary wiring, labor, etc., required to perform the test.

B. System Tests

I. After wires and cables are in place, but before being connected to devices and equipment, test the system for shorts, opens, intentional and unintentional grounds by means of an approved type of constant "Megger". Replace or clear all conductors or cables that are shorted or unintentionally grounded.

2. Any wiring device, lighting fixture or electrical apparatus in this contract, if grounded or shorted in an integral "line" part, shall be removed and the trouble corrected or device replaced.
3. System voltages shall be measured and recorded under maximum load conditions available during construction. Incoming service voltage, as well as transformer secondary voltages shall be checked and adjusted to be equal to the voltage rating, or not exceeding 2-1/2% above the voltage rating. Line-to-line voltages should be adjusted between 460 and 480 volts, or 208 and 213 volts. A record of each final test along with time of day, date, and conditions of loading should be recorded for each test location.
4. Test for load division between all conductors in parallel feeders. Division of currents shall not exceed 10% of feeder current. Record of test for each parallel feeder shall be made. Records shall be complete and amperage, voltage, and feeder identification. Where corrective measures are taken, before and after tests shall be provided. All tests shall be signed by the tester and the witness of the test.
5. Submit three copies of all tests, certified by the Contractor for approval. Test data shall include the name of the building, equipment driven, and nameplate data of all integral horsepower motors.
6. Do not subject Ground Fault Interrupter (GFI) type breakers or receptacles to Megger tests.
7. Special tests shall be made where called for in these drawings and specifications.

C. Demonstration Test of Completed Systems

1. Demonstrate the essential features of the following systems:
   a. Electrical systems controls and equipment
   b. Lighting fixtures: Fixtures, lamps, ballasts, and accessories.
   c. Panelboards
   d. Wiring Devices: Receptacles, coverplates, and switches
2. Each system shall be demonstrated once only, after completion of satisfactory testing and acceptance.
3. The demonstration shall be held upon completion and acceptance of all systems at a date to be agreed upon in writing by the Architect.
4. The demonstration shall be held by the appropriate Contractors in the presence of the Architect or his representative and the manufacturer's representative.
5. Demonstrate the functions and location (in the structure) of each system, and indicate its relationship to the riser diagrams and drawings.

6. Demonstrate by "start-stop operation" how to work the controls, how to reset protective devices, how to replace fuses, and what to do in case of emergency.
7. The Contractor shall test all receptacles for power polarity and ground to assure that all receptacles are operating properly, correctly wired and suitably grounded. Provide an affidavit to the effect that this work has been accomplished, when and by whom performed.

3.8 CONDITIONS OF EQUIPMENT AT FINAL ACCEPTANCE

A. At time of acceptance, the Contractor shall have inspected all installed systems to assure the following has been completed:
   1. Fixtures are operating; lenses and reflectors are free of dust, debris, and fingerprints.
   2. Panelboards have all conductors neatly formed, laced and made-up tight. Enclosures shall be vacuum cleaned; surfaces clean of stray paint, dust, grease and fingerprints. All circuit directories to be neatly typed and in place.
   3. Wall plates and switch and receptacle parts to be clean, free of paint, plaster, etc.
   4. Safety and disconnect switches to be vacuum cleaned of debris, dust and all surfaces free of stray paint, grease and fingerprints.
   5. Touch-up all scratched surfaces using paint matching the existing equipment paint. Where paint cannot be matched, the entire surface shall be repainted in a color and manner approved by the Architect.
   6. All electrical equipment shall have proper labeling as specified under this section.

3.9 GUARANTEE

The Contractor shall guarantee all materials and workmanship for a period of twelve (12) months after the final acceptance of work.

.

END OF SECTION

PART 1 - GENERAL

1.1 SCOPE

A. This section specifies the provision of grounding and bonding equipment for electrical systems.

1.2 REFERENCE STANDARDS

A. ANSI/IEEE Std 142 - Recommended Practice for Grounding of Industrial and Commercial Power Systems.

B. ANSI/UL 467 - Safety Standard for Grounding and Bonding Equipment.

1.3 APPLICABLE PROVISIONS

A. Refer to Section SS16051 – Common Work Results For Electrical

PART 2 - PRODUCTS

2.1 WIRING

A. Provide bare conductors for bonding jumpers. Provide 250-volt insulated conductors having a green-colored insulation for grounding electrode and equipment grounding conductors. Use solid conductors for No. 12 and No. 10 wire; stranded for No. 8 and larger.

PART 3 - EXECUTION

3.1 SYSTEM GROUND

A. System Neutral - Where a system neutral is used, ground the system neutral conductor as required by NEC Article 250. Ground the system neutral only at the point of service and isolate it from ground at all other points in the system.

3.2 EQUIPMENT GROUND

A. Raceway Systems and Equipment Enclosures.
   1. Ground cabinets, junction boxes, outlet boxes, motors, controllers, raceways, fittings, panelboards, generators, transfer switches, transformer enclosures, other equipment and metallic enclosures. Ground equipment and enclosures to the continuous-grounded metallic raceway system in addition to any other specific grounding shown.
   2. Provide bonding jumpers and ground wire throughout installation to ensure electrical continuity of the grounding system.
   3. Provide grounding-type insulated bushings for metal conduits terminating in equipment enclosures containing a ground bus and connect the bushing to the ground bus.
   4. Provide a green insulated equipment grounding conductor for each lighting branch circuit, each receptacle branch circuit, each power branch circuit and each feeder.
   5. Provide bonding jumper and bonding bushing on each metallic conduit entering or leaving the enclosure of the service equipment.

B. Size. When grounding and bonding conductors are not sized on drawings, size the grounding conductors in accordance with NEC Table 250-95. Size bonding jumper so that minimum cross-sectional area is greater than or equal to that of the equivalent grounding conductor as determined from NEC Table 250-95.

END OF SECTION

PART 1 - GENERAL

1.1 SCOPE

A. This section specifies the provision of insulated conductors.

1.2 REFERENCE STANDARDS

A. ANSI/UL 83 - Thermoplastic-insulated Wires.

B. ICEA S-61-402 (NEMA WC 5) - Thermoplastic-insulated Wire and Cable for the Transmission and Distribution of Electrical Energy.

1.3 APPLICABLE PROVISIONS

A. Refer to Section SS16051 – Common Work Results for Electrical.

PART 2 - PRODUCTS

2.1 IDENTIFICATION

A. Provide new insulated conductors marked according to NEC Article 310.

2.2 600-VOLT INSULATED CONDUCTORS

A. Size. As shown on drawings or as required by the N.E.C., whichever is larger.

B. Construction.
1. Conductor. Soft-drawn, annealed copper. Aluminum conductors are not acceptable.
2. Insulation. Unless otherwise noted on the drawings, use THHN/THWN for general wiring.
3. All conductors shall be permanently marked by the manufacturer. The conductor(s) marking shall be as dictated by N.E.C. (Article 310-11). Conductor(s) that do not carry the required marking are not acceptable.

C. Use. For general wiring use No. 12 minimum, with No. 12 and 10 solid conductors, and No. 8 and larger stranded conductors.

D. Listing. Single Conductor. UL 83.

E. Acceptable Manufacturers. Single Conductor. Anaconda, Brand-Rex, Houston Wire & Cable Co., Coleman, Collyer, Carol, Essex, General, ITT-Royal, Okonite, Phelps Dodge, Southwire/Senator, Triangle PWC.

PART 3 - EXECUTION

3.1 INSTALLATION

A. Protection. Unless otherwise indicated, mechanically protect conductors for systems by installing in N.E.C. compliant raceways. Do not install the conductors until raceway system is complete and properly cleaned. Use an approved wire-pulling compound when pulling large conductors. Wiring pulling compound shall be U.L. listed and as

recommended by wiring manufacturer. Do not bend any conductor either permanently or temporarily during installation to radii less than four times the outer diameter of 600-volt insulated conductors. Do not exceed manufacturer's recommended values for maximum pulling tension.

B. Splices and Terminations. Use crimp type connectors for splices of all stranded conductors. Mechanical type connectors for conductor splices are not acceptable. Splices shall be kept to a minimum. Splices shall be made in junction and/or pull boxes. Refer to Section SS16135 Boxes for junction and pull box sizing and installation requirements. Splices in conduit fittings (i.e., LB's conduit bodies), and in panelboards are not acceptable. Use ring-tongue type terminators on all control wiring. All connectors shall be of material recommended by conductor manufacturer(s) to prevent any corrosion or electrolysis between dissimilar conductor system(s).

C. Appearance. Neatly and securely bundle or cable conductors in an enclosure using nylon straps with a locking hub or head on one end and a taper on the other.

3.2 600-VOLT INSULATED CONDUCTORS

A. Size. Install conductor sizes as indicated. Provide No. 10 conductor for single-phase, 120-volt, 20-ampere circuits for which the distance from panelboard to the first outlet is more than 100 feet.

B. Home Runs. Except where specifically indicated, provide branch circuit home runs with not more than two different line conductors and three neutrals, or two shared neutrals, in a single raceway for 3-wire, single-phase systems, nor more than two different line conductors and a common neutral in a single raceway for 4-wire, 3-phase systems. Use home run circuit numbers as indicated for panelboard connections. Comply with ampacity adjustment factors as required by the NEC 310-16.

C. Color Code. Provide color scheme for conductors as required by City of Austin and matching the existing system at ABIA.

END OF SECTION

PART 1 - GENERAL

1.1 WORK INCLUDED

A. This section specifies the furnishing and installation of electrical raceway systems.

1.2 REFERENCE STANDARDS

A. The following industry standards shall apply:
1. ANSI/ANSI C80.1 - Specification for Zinc-Coated Rigid Steel Conduit.
2. ANSI/ANSI C80.3 - Specification for Zinc-Coated Electrical Metallic Tubing.
3. ANSI/ANSI C80.4 - Specification for Fittings for Rigid Metal Conduit and Electrical Metallic Tubing.
4. ANSI/UL I - Safety Standard for Flexible Metal Conduit.
5. ANSI/UL 5 - Safety Standard for Surface Metal Raceways and Fittings.
6. ANSI/UL 651 - Safety Standard for Rigid Nonmetallic Conduit.
7. ANSI/UL 797 - Electrical Metallic Tubing.
8. NEMA TC 3 - PVC Fittings for Use with Rigid PVC Conduit and Tubing.
9. UL 6 - Rigid Metal Electrical Conduit.
10. UL 360 - Liquid-tight Flexible Steel Conduit.
11. UL 467 - Electrical Grounding and Bonding Equipment.

1.3 APPLICABLE PROVISIONS

A. Refer to Section SS16051 – Common Work Results for Electrical.

PART 2 - PRODUCTS

2.1 CONDUIT AND FITTINGS

A. Rigid Metal Conduit (RGS)
1. Conduit. Hot-dipped galvanized rigid steel conduit (RGS with zinc-coated threads and an outer coating of zinc chromate.
2. Fittings. Threaded, malleable iron, either cadmium plated or hot-dipped galvanized.
3. Listing. UL 6.

B. Rigid Nonmetallic Conduit (PVC)
1. Conduit. Schedule 40 polyvinyl chloride.
2. Fittings. Solvent weld socket type.
3. Listing. UL 6.

C. Liquid-tight Flexible Metal Conduit.
1. Conduit. Spiral-wound, hot-dipped galvanized steel strip plus a bonded outer jacket of PVC.
2. Fittings. Compression type, malleable iron, with insulated throat, either cadmium plated or hot-dipped galvanized.
3. Listing. UL 3 for conduit and UL 467 for fittings.

PART 3 - EXECUTION

3.1 CONDUIT AND FITTINGS

A. Minimum Trade Size. 3/4-inch above grade, 1-inch below grade.

B. Types According to Use. Use rigid galvanized steel conduit (RGS) throughout the project except as specified below.
   1. Use rigid galvanized steel exposed to rain, condensation, moisture, or constant high humidity, in exposed areas and for main feeders.
   2. Use rigid nonmetallic conduit where installed below grade.
   3. Transitions for below-grade to above-grade locations using PVC to metal conduit, make the transition from PVC to metal conduit before turning up with the factory steel long radius 90 degree elbow.

C. Preparation. Place sleeves in the forms of walls and floor slabs for the free passage of conduits. Set sleeves in place a sufficient time ahead of concrete placement so as not to delay the work. Apply caulking for sleeves through floors and through exterior walls. Be sure that plugs or caps are installed before concrete placement begins.

D. Installation Requirements.
   1. Metallic conduits must be continuous between enclosures such as outlet, junction and pull boxes, panels, cabinets, etc. The conduit must enter and be secured to enclosures so that each system is electrically continuous throughout. Where knockouts are used, provide double locknuts, one on each side. At conduit terminations, provide insulated bushings for conductor protection. Where conduits terminate in equipment having a ground bus, such as in panelboards, provide conduit with an insulated grounding bushing and extend a suitable grounding wire to the ground bus.
   2. Have rigid nonmetallic conduit adequately solvent welded at joints to form a tight, waterproof connection.
   3. Run concealed conduit as directly and with the largest radius bends as possible. Run exposed conduit parallel or at right angles to building or other construction lines in a neat and orderly manner. Conceal conduit in finished areas. Unless otherwise shown, remaining conduit may be exposed.

E. Installation Methods.
   1. Install each entire conduit system complete before pulling in any conductors. Clean the interior of every run of conduit before pulling in conductors to guard against obstructions and omissions.
   2. Cut all joints square, then thread and ream smooth. Coat cuts, threads or scratches on steel conduit with an approved zinc chromate or with a 90 percent zinc paint. When dry, draw up tight.
   3. Make bends with standard ells or conduit bent in accordance with the NEC. Make field bends using equipment designed for the particular conduit material and size involved. Bends must be free from dents or flattening. Use no more than the equivalent of four 90-degree bends in any run between terminals and cabinets, or between outlets and junction boxes or pull boxes.
   4. Conduit bodies may be used in lieu of conduit ells where ease of installation and appearance warrants their use. Conduit bodies larger than 1-inch may be used only where approved.
   5. Provide a No. 30 nylon pulling line in conduits in which wiring is not installed under this work, such as communication and revenue control systems. Identify both ends of the line by means of labels or tags reading "Pulling Line".

6. Suitably cap conduit during construction to avoid water, dirt and trash entrance.
7. Use expansion-deflection fittings on conduit crossing structural expansion joints and on exposed conduit runs where necessary. Provide bonding jumpers across fittings in metal raceway systems.
8. With a coupling, terminate concealed conduit for future use at structural surfaces. Install a pipe plug flush with the surface.

END OF SECTION

PART 1 - GENERAL

1.1 SCOPE

A. This section specifies the furnishing and installation of outlet boxes, junction boxes and pull boxes.

1.2 REFERENCE STANDARDS

A. ANSI/NEMA, Publication No. OS 1 - Sheet-steel Outlet Boxes, Device Boxes, Covers and Box Supports, and Cast Aluminum Covers.

B. ANSI/UL 514 - Electrical Outlet Boxes and Fittings.

C. Comply with NFPA 70 – National Electrical Code.

1.3 APPLICABLE PROVISIONS

A. Refer to Section SS16051 – Common Work Results For Electrical.

PART 2 - PRODUCTS

2.1 OUTLET BOXES

A. Provide cast metal type FD outlet boxes. Provide gaskets to meet wet location label where outdoors. Provide boxes of sufficient size to accommodate wiring devices to be installed at outlet. Square or rectangular boxes may be supplied. Unless otherwise noted, provide 1-1/2-inch deep by 4-inch box.

B. Listing. UL 514 and NEMA FB 1.

C. Acceptable Manufacturers. Appleton, Bowers, Crouse-Hinds, Efcor, Midwest, OZ/Gedney/RACO, Steel City, T & B.

PART 3 - EXECUTION

3.1 OUTLET BOXES

A. Securely fasten outlet boxes in position.

B. Verify the final location of each outlet with Architect or Owner before rough-in. Remove and relocate any outlet box placed in an unsuitable location.

C. Box Openings. Provide only the conduit openings necessary to accommodate the conduits at the individual location.

3.2 JUNCTION AND PULL BOXES

A. Installation. Install boxes as required to facilitate cable installation in raceway systems. Junction and pull boxes shall be sized to accommodate conductor system splices and associated insulation. Generally provide boxes in conduit runs of more than 100-feet or as required in other Sections. Locate boxes strategically and make them of such shape to permit easy pulling of wire or cables.

B. Covers. Provide boxes so that covers are readily accessible and easily removable after completion of the installation

END OF SECTION

PART 1 - GENERAL

1.1 WORK INCLUDED

A. This section specifies the furnishing and installation of wiring devices and device plates.

1.2 REFERENCE STANDARDS

A. ANSI/UL 20 - General-Use Snap Switches.

B. ANSI/UL498 - Electrical Attachment Plugs and Receptacles.

C. NEMA WD I - General-Purpose Wiring Devices.

1.3 APPLICABLE PROVISIONS

A. Refer to Section SS16051 – Common Work Results For Electrical

PART 2 - PRODUCTS

2.1 RECEPTACLES

A. Type. Back and side wired receptacles, as scheduled.

B. Rating. NEMA 5-20R, unless indicated otherwise on drawings.

C. Listing. UL 498 and Federal Specification W-C-596.

D. Acceptable Manufacturers: Hubbell, Leviton

2.2 DEVICE PLATES

A. All cover plates shall be stainless steel, provided with captive screws.

2.3 DEVICE COLOR

A. Supply regular service items in white, unless noted otherwise. Coordinate color with Architect.

PART 3 - EXECUTION

3.1 DEVICE COORDINATION

A. Where items of equipment are provided under other Sections of this specification or by the Owner, such as IT equipment, provide a compatible receptacle for the cap or plug and cord of the equipment.

3.2 RECEPTACLES

A. Mount receptacles vertically in a suitable steel outlet box centered at the height of 15-inches from the ground, or as shown on the drawings. The Architect or Owner reserves the right to make reasonable changes in receptacle locations without change in the contract sum.

3.3 DEVICE PLATES

A. Type. Provide device plates for each outlet box of the type required for service and device involved.

B. Ganged Devices. Mount ganged devices under a single, one-piece, device plate.

END OF SECTION

PART 1 – GENERAL

1.1 WORK INCLUDED

A. This section specifies the provision of interior and exterior lighting fixtures, lamps, supports, and all accessories as required for complete operation of fixtures.

1.2 REFERENCE STANDARDS

A. NFPA 70E – Standard for Electrical Safety in the Workplace (National Electrical Safety Code)

B. NFPA 70 – National Electrical Code

C. UL 1598

D. ASTM A 123 for galvanized finish

1.3 SUBMITTALS

A. Product Data: For each type of lighting fixture, arranged in order of fixture designation. Include data on features, accessories, and finishes.

B. Shop Drawings: Show details of nonstandard or custom lighting fixtures. Indicate dimensions, weights, methods of field assembly, components, features, and accessories.

C. Field quality-control reports.

1.4 APPLICABLE PROVISIONS

A. Refer to Section SS16051 – Common Work Results for Electrical, General Provisions for submittals, quality assurance, substitutions, and other requirements.

PART 2 - PRODUCTS

2.1 GENERAL REQUIREMENTS FOR LUMINAIRES

A. Fixtures shall be UL listed and labeled for installation in wet locations,

B. Metal parts shall be free of burrs, sharp corners, and edges.

C. Sheet metal components shall be corrosion-resistant aluminum unless otherwise indicated. Form and support to prevent warping and sagging.

D. Housings shall be rigidly formed, weather-and light-tight enclosures that will not warp, sag, or deform in use. Provide filter for enclosed luminaires.

E. Exposed hardware material shall be stainless steel.

F. Manufacturer’s standard paint shall be applied to factory-assembled and tested luminaires before shipping. Where indicated, match fixture finish process and color of supporting materials.

2.2 LAMPS, DRIVERS AND ACCESSORIES

A. Provide lamps, drivers, and accessories as required for fixtures to be fully operational, and as scheduled on drawings.

PART 3 - EXECUTION

3.1 INSTALLATION

A. Set fixtures level, plumb, and square with existing building lines (canopies, walls, and ceilings).

B. Install lamps for each luminaire as scheduled.

C. Fasten luminaire to indicated supports using fastening methods and materials as recommended and approved by manufacturer. Align supports for optimum alignment of luminaires.

3.2 CORROSION PREVENTION

A. Do not use aluminum in contact with earth or concrete. When in direct contact with a dissimilar metal, protect aluminum by insulating fittings or treatment.

B. Wrap steel conduits in concrete with plastic tape.

3.3 GROUNDING

A. Ground metal portions of fixtures, drivers, and other components according to provisions in other Divisions of these specifications, per the drawings, and as required by NEC Article 250.

B. Install grounding conductor pigtail for connecting luminaire to grounding system.

END OF SECTION