ADDENDUM NO. 1

Date October 18, 2016

City of Austin

Project Name Four Points Elevated Reservoir Improvements

C.I.P. No. 2127.034 IFB No.: CLMC624

This Addendum forms a part of the Contract and corrects or modifies original Bid Documents, dated October 3, 2016. Acknowledge receipt of this addendum in space provided on bid form. Failure to do so may subject bidder to disqualification.

A. Project Manual Revisions:

TOC 10/03/16 Table of Contents

Delete and Replace with Attached:

Revised date:

Table of Contents

Section 00100

Section 00300U

Section 00700

Section 00830

Section 00830BC

Section 07720

Section 11550

Added:

Section SP701S

00100 10/03/16 Instructions to Bidders

Delete and Replace with Attached

1. Preparation of Bid:

e. Minimum Wages, changed from $13.03 to $13.50

i. Information. replace verbiage from "a copy of each Addendum will be provided to each person to whom a set of Bid Documents has been furnished" with "obtained through the City's Vendor Connection website, log on www.austintexas.gov/financeonline/vendor_connection/index.cfm."

00300U 10/03/16 Bid Form Unit Price

Delete and Replace with Attached

Changed the Minimum Wage requirement from $13.03 to $13.50, effective for FY17

00700 10/03/16 General Conditions

Delete and Replace with Attached

6.2 Labor, Materials and Equipment, 6.2.1

Changed the total minimum wage requirement from $13.03 to 13.50

00830 10/03/16 Wage Rates and Payroll Reporting

Delete and Replace with Attached

l. Payment, B. Changed the Minimum Wage requirement from $13.03 to $13.50, effective for FY17

00830BC 10/03/16 Wage Rates Building Construction

Delete and Replace with Attached

Changed the Minimum Wage requirement from $13.03 to $13.50, effective for FY17

SP701S 10/18/16 Fencing

Added special specification

07720 10/03/16 Roof Accessories

Replaced specification

11550 10/03/16 Fall Prevention and Safety System

Replaced specification

B. Drawing Revisions:

1. Replace the following sheets:

Replace Sheet	With Sheet	Summary of Change
G-2	G-2	Detail 1
G-3	G-3	Detail 1
S1.1	S1.1	'Concrete Notes', Note 14
S1.2	S1.2	'Concrete Grout Notes', Note 4
S2.1	S2.1	Section 1 and added Sheet Notes 1&2
S2.2	S2.2	Modifications to all three Sections
S2.3	S2.3	Modifications to Sections 3 & 4
S4.1	S4.1	Removed the Keyways for all 8" walls
S5.2	S5.2	Modified Sections 209, 213 and 214
S5.3	S5.3	Modified Sections 217, 218A, 219 & z

S6.1	S6.1	Modified Note for Section 303
S6.2	S6.2	Modified Drain Detail 310

2. Sheet G-6, add the following notes:

   "3. Contractor is to prepare and recoat existing pedestal roll-up door and man door on the interior and exterior of the pedestal. Abrasive blasting will not be allowed. Coat per coating system OD-06, color to be selected by Owner during construction. Provide epoxy mastic top coat on the bottom 4-inches of the doors."

3. Sheet C3, delete Fencing Note No. 3 and replace with the following:

   "3. Existing fence and gate fabric and components are PVC coated. All fence and gate materials are to be replaced with PVC coated components as specified. Proposed barbed wire is to be galvanized steel and not PVC coated. Prepare and coat existing fence posts per coating system OD-06. Color to be black."

This addendum consists of 122 page(s)/sheet(s).

10/18/16

Approved by OWNER

Approved by ENGINEER/ARCHITECT

STATE OF TEXAS
CHARLES A KUCHERKA
98388
LICENSED
PROFESSIONAL ENGINEER

10/18/16

FREESE AND NICHOLS, INC.
TEXAS REGISTERED
ENGINEERING FIRM
F-2144

END

Document Number		Title
VOLUME 1		
INTRODUCTORY INFORMATION		
	09/22/16	Title Page
	09/22/16	Seal Sheet
	10/03/16	Table of Contents
BIDDING REQUIREMENTS, CONTRACT FORMS, & CONDITIONS OF THE CONTRACT		
Pre-Bid Information		
00020	09/06/16	Invitation for Bids
Instructions to Bidders		
00100	10/03/16	Instructions to Bidders
Bid Forms		
00300U	10/03/16	Bid Form (Unit Price)
Supplements to Bid Forms		
00400	06/01/16	Statement of Bidder's Experience
00405	09/25/05	Certificate of Non-Suspension or Debarment
00410	01/15/16	Statement of Bidder's Safety Experience
00440	10/19/15	Affidavit - Prohibited Activities
00475	05/11/15	Nonresident Bidder Provisions
Agreement Form		
00500	1/15/16	Agreement
Bonds and Certificates		
00610	02/23/10	Performance Bond
00620	02/23/10	Payment Bond
00630	05/11/15	Nondiscrimination Certificate
00631	03/06/14	Title VI Assurances Appendix A
00650	06/01/16	Certificate of Insurance
00670	03/20/14	Texas Sales and Use Tax Exemption Certificate
00680	06/05/06	Non-Use of Asbestos Affidavit (Prior to Construction)
00681	06/05/06	Non-Use of Asbestos Affidavit (After Construction)
General Conditions		
00700	10/03/16	General Conditions of the Contract
Supplementary Conditions		
00810	09/06/16	Supplemental General Conditions
00819	06/10/05	Security Requirements & SP-1070 Facility Security Procedures for Contractors

Document Number		Title
00830	10/03/16	Wage Rates and Payroll Reporting
00830BC	10/03/16	Wage Rates and Payroll Reporting Building Construction

Addenda

00900	01/15/16	Addendum {If any addendum is issued, it will be bound in the front of Contract sets following contract execution.}

SPECIFICATIONS

Division 1 - General Requirements

01010	04/22/13	Summary of Work
01020	09/06/16	Allowances
01025	08/13/16	Measurement and Payment
01050	10/19/15	Grades Lines & Levels
01095	07/21/03	Reference Standards and Definitions
01096	05/06/11	Storm Water Pollution Prevention Plan (SWPPP)
01200	08/09/12	Project Meetings
01300	04/22/13	Submittals
01310	04/06/16	Schedules and Reports
01352	04/22/13	Sustainable Construction Requirements
01353	08/09/12	Construction Equipment Emissions Reduction Plan
01380	08/09/12	Construction Photography & Videos
01500	08/09/12	Temporary Facilities
01505	04/22/13	Construction and Demolition Waste Management
01550	08/09/12	Public Safety and Convenience
01650	03/25/13	Facility Startup/Commissioning
01656	07/27/15	Disinfection of Potable Water Facilities
01700	07/27/15	Contract Closeout
01710	07/27/15	Final Cleaning
01730	03/25/13	Operation and Maintenance Data
01900	03/12/12	Prohibition of Asbestos Containing Materials
01900a	06/05/06	Statement of Non-Inclusion of Asbestos Containing Material (E/A Prior to Design)
01900b	06/05/06	Statement of Non-Inclusion of Asbestos Containing Material (E/A After Design)

City Standard Technical Specifications

102S	08/20/07	Clearing and Grubbing
104S	09/26/12	Removing Portland Cement Concrete
111S	09/26/12	Excavation
130S	09/26/12	Borrow
132S	08/20/07	Embankment
201S	08/20/07	Subgrade Preparation
312S	09/26/12	Seal Coat
313S	02/24/10	Cleaning and/or Sealing Joints and Cracks (Asphaltic Concrete)
340S	09/26/12	Hot Mix Asphaltic Concrete Pavement

Document Number		Title
403S	09/26/12	Concrete for Structures
405S	11/13/07	Concrete Admixtures
406S	09/26/12	Reinforcing Steel
408S	11/13/07	Concrete Joint Materials
409S	11/13/07	Membrane Curing
410S	09/26/12	Concrete Structures
503S	02/17/00	Frames, Grates, Rings, and Covers
508S	02/24/10	Miscellaneous Structures and Appurtenances
509S	09/26/12	Excavation Safety Systems
510	10/03/13	Pipe
511S	09/26/12	Water Valves
591S	12/31/13	Riprap for Slope Protection
601S	09/01/11	Salvaging and Placing Topsoil
604S	12/30/14	Seeding for Erosion Control
610S	09/26/12	Preservation of Trees and Other Vegetation
633S	11/26/01	Landgrading
639S	08/18/10	Rock Berm
641S	06/21/07	Stabilized Construction Entrance
642S	09/01/11	Silt Fence
700S	09/26/12	Mobilization
701S	09/26/12	Fencing
702S	05/20/02	Removal and Relocation of Existing Fences
802S	09/26/12	Project Signs
803S	11/15/11	Barricades, Signs and Traffic Handling

Special Provisions to City Standard Technical Specifications

SP510	08/09/16	Pipe
SP511S	08/09/16	Water Valves
SP701S	10/17/16	Fencing

SPECIAL SPECIFICATIONS

Division 2 – Existing Conditions

02221	08/10/16	Structural Demolition

Division 5 – Metals

05120	08/10/16	Structural Steel
05121	08/10/16	Welding

Division 7 – Thermal and Moisture Protection

07720	10/17/16	Roof Accessories

Division 9 – Finishes

09871	08/15/16	Potable Water Tank Recoating

Document Number		Title
Division 11 – Equipment		
11550	10/17/16	Fall Prevention and Safety Systems
Division 15 – Mechanical		
15000	08/08/16	Pressure Relief/Surge Anticipator Control Valve
15778	09/22/16	Electrical Resistance Heat Tracing
Division 16 – Electrical		
16010	June 2016	Electrical General Provisions
16150	07/29/16	Raceways, Fittings and Supports
16200	07/29/16	Wiring (600 Volts and Below)
16250	07/29/16	Boxes and Cabinets
16300	07/29/16	Wiring Devices
16350	07/29/16	Lighting
16500	07/29/16	Panelboards
16540	07/29/16	Field Control Stations
16550	03/17/16	Grounding
16642	August 2016	Cathodic Protection System
16670	07/29/16	Lightning Protection
16800	07/29/16	Calibration, Testing and Settings
Division 17 – Instrumentation		
17380	07/29/16	Field Instrumentation and Sensing Devices
Appendix		
Appendix A	6/24/2016	Four Points Pump Station & Reservoirs Security Upgrade
VOL. 2	**10/03/16**	**MBE/WBE Procurement Program Package**

END

1. Preparation of Bid

a. **Bid Documents.** Each Bidder must prepare its Bid in ink on forms furnished by OWNER or as otherwise specified or permitted. Blank spaces for each item in Bid form must be filled. Bidder must submit a price for each item in Bid. In case of conflict between unit prices and extensions, unit prices shall govern. The Bid must be executed in the complete and correct legal name of individual, partnership, firm, corporation or other legal entity constituting the Bidder.

b. **Vendor Registration.** All CONTRACTORS must be registered to do business with OWNER prior to Contract Award. All Subcontractors must be registered with the OWNER prior to execution of a contract. Prime Contractors are responsible for ensuring that their Subcontractors are registered as vendors with the City of Austin. Registration can be done through the OWNER's on- line Vendor Registration system. Log onto https://www.ci.austin.tx.us/vss/Advantage and follow the directions.

c. **Pre-Bid Conference.** Unless otherwise notified, Bidders must attend the Pre-Bid Conference to ensure their understanding of OWNER's bidding and contracting requirements, particularly MBE/WBE Procurement Program requirements.

d. **Sales Tax Exemption.** The Owner is a tax-exempt organization as defined by Chapter 11 of the Property Tax Code of Texas. Bid prices shall not include sales tax on materials, supplies, or equipment that are incorporated into the real property interest of the OWNER or are otherwise completely used and consumed in the performance of the Contract. OWNER will furnish CONTRACTOR with a Sales Tax Exemption Certificate to be issued to Suppliers in lieu of the tax.

e. **Minimum Wages.** Workers on Project shall be paid not less than wage rates, including fringe benefits, as published by the Department of Labor (DOL) for Building Construction and Heavy and Highway Trades "AS APPLICABLE" and/or the $13.50 minimum wage required by City of Austin Ordinance No. 20160324-015, whichever is higher. The Total Minimum Wage required can be met using any combination of cash and non-cash qualified fringe benefits provided the cash component meets or exceeds the $13.50 minimum wage required.

f. **Addenda.** Bidder shall be knowledgeable of all Addenda issued and shall acknowledge all Addenda in spaces provided on Bid form. Further information regarding the Bid documents and the Project may be obtained from the Project Manager listed at the end of Section 00020, Invitation for Bids.

g. **Required Items.** Bids must include all specified items in this section and be submitted in accordance with paragraph No. 7 below. Any additional requirement to the bid submittal is specified in Section 00820. Any corrections to a Bid shall be initialed by the person signing the Bid.

h. **Professional Services.** Bidders must secure any required professional services that are defined as professional services under the Professional Services Procurement Act, Chapter 2254 of the Texas Government Code (for example: registered professional land surveyors and professional engineers) using the qualifications based selection process prescribed by that chapter. (Note: It is a violation of State Law to solicit Bids for professional services.)

i. **Further Information.** Prospective Bidders desiring further information or

interpretation of Project Manual or Drawings must make a written request for such information to OWNER addressed to the Authorized Contact Person listed in Section 00020 no later than seven (7) Working Days before Bid opening. Interpretation of Project Manual or Drawings will be made by Addendum only and obtained through the City's Vendor Connection website.
Log on www.austintexas.gov/financeonline/vendor_connection/index.cfm. Any verbal communications will not be binding on the OWNER.

j. **Anti-Lobbying and Procurement.** Article 6, Chapter 2-7, Austin City Code, prohibits lobbying activities or representations by the Bidder between the date that the Invitation for Bid (IFB) is issued and the date of contract execution. The text of the pertinent City Ordinance may be viewed at http://www.cityofaustin.org/edims/document.cfm?id=161145.

(1) Definitions

(A) "Agent" means a person authorized by a bidder to act for or in place of bidder, including a person acting at the request of bidder, a person acting with the knowledge and consent of a bidder, or a person acting with any arrangement, coordination, or direction between the person and the bidder.

(B) "Authorized Contact Person" means the Project Manager listed in Section 00020, IFB, or other persons specifically identified in the IFB as the contact regarding the solicitation, or the authorized contact person's designee during the course of the no-contact period.

(C) "City Employee" means a person employed by the City.

(D) "City Official" is defined in Section 2-7-2 of the City Code.

(E) "No-Contact Period" means the period of time from the date the IFB is issued until a contract is executed. If the City withdraws the IFB or rejects all bids with the stated intention to reissue the same or a similar IFB for the same or similar project, the no-contact period continues during the time period between the withdrawal and reissue.

(F) "Response" means a bid.

(G) "Respondent" means a bidder. The term "respondent" also includes:

(i) an owner, board member, officer, employee, contractor, subsidiary, joint enterprise, partnership, agent, lobbyist, or other representative of a bidder;

(ii) a person or representative of a person that is involved in a joint venture with the bidder, or a subcontractor in connection with the bidder's bid; and

(iii) a bidder who has withdrawn a bid or who has had a bid rejected or disqualified by the City.

(H) "Representation" means a communication related to a bid to a council member, official, employee, or City representative that is intended to or that is reasonably likely to:

(i) provide information about the bid;

(ii) advance the interests of the bidder;

(iii) discredit the bid of another bidder;

(iv) encourage the City to withdraw the IFB;

(v) encourage the City to reject all of the bids;

(vi) convey a complaint about a particular bid; or

(vii) directly or indirectly ask, influence, or persuade any City official, City employee, or body to favor or oppose, recommend or not

recommend, vote for or against, consider or not consider, or take action or refrain from taking action on any vote, decision, or agenda item regarding the solicitation.

(I) "Solicitation" means an opportunity to compete to conduct business with the City that requires City Council approval under City Charter Article VII Section 15 (Purchase Procedure).

(J) "City" means Owner.

(2) Restriction on Contacts.

(A) During a no-contact period, a bidder shall make a representation only through the authorized contact person.

(B) During the no-contact period, a bidder may not make a representation to a City official or to a City employee other than to the authorized contact person. This prohibition also applies to a vendor that makes a representation and then becomes a bidder.

(C) The prohibition of a representation during the no-contact period applies to a representation initiated by a bidder, and to a representation made in response to a communication initiated by a City official or a City employee other than the authorized contact person.

(D) If the City withdraws an IFB or rejects all bids with a stated intention to reissue the same or similar IFB for the same or similar project, the no-contact period shall expire after the ninetieth day after the date the IFB is withdrawn or all bids are rejected if the IFB has not been reissued during the ninety day period.

(E) The no-contact period shall expire when the first of the following occurs: contract is executed or solicitation is cancelled.

(F) The purchasing officer or the Capital Contracting Office Director may allow bidders to make representations to city employees or city representatives in addition to the authorized contact person for a solicitation that the purchasing officer or the Capital Contracting Office Director finds must be conducted in an expedited manner; an expedited solicitation is one
conducted for reasons of health or safety under the shortest schedule possible with no extensions. The purchasing officer's or Capital Contracting Office Director's finding and additional city employees or city representatives who may be contacted must be included in the solicitation documents.

(G) Representations to an independent contractor hired by the City to conduct or assist with a solicitation will be treated as representations to a City employee.

(H) A current employee, director, officer, or member of a bidder, or a person related within the first degree of consanguinity or affinity to a current employee, director, officer or member of a bidder, is presumed to be an agent of the bidder for purposes of making a representation. This presumption is rebuttable by a preponderance of the evidence as determined by the purchasing officer or Capital Contracting Office Director.

(I) A bidder's representative is a person or entity acting on a bidder's behalf with the bidder's request and consent. For example, a bidder may email their membership list and ask members to contact council members on the bidder's behalf. The members are then acting per bidder's request and with their consent, and the members have become bidder representatives.

(3) Permitted Representations

(A) If City seeks additional information from bidder, the bidder shall submit the representation in writing only to the authorized contact person. The authorized contact person will then distribute the written representation in accordance

with the terms of the IFB. A bidder cannot amend or add information to a bid after the bid deadline.

(B) If bidder wishes to send a complaint to the City, the bidder shall submit the complaint in writing only to the authorized contact person. The authorized contact person will then distribute a complaint regarding the process to members of the city council or members of the City board, to the Capital Contracting Office Director, and to all bidders on the IFB. However, the Capital Contracting Office Director or purchasing officer shall not permit distribution of any complaint that promotes or disparages the qualifications of a bidder, or that amends or adds information to a bid. A determination of what constitutes promoting or disparaging the qualifications of a bidder or constitutes amending or adding information is at the Capital Contracting Office Director's or purchasing officer's sole discretion. Bid protests are not subject to this subsection. Documents related to a bid protest may not be forwarded to council under this subsection.

(C) If a bidder submits a written inquiry regarding an IFB, the authorized contact person will provide a written answer and distribute both the inquiry and answer to all bidders on the IFB.

(D) If a bidder does not receive a response from the authorized contact person, the bidder may contact the Capital Contracting Office Director or purchasing officer as appropriate.

(E) A bidder may ask a purely procedural question, for example a question regarding the time or location of an event, or where information may be obtained, of a City employee other than the authorized contact person. This provision does not permit a bidder to make suggestions or complaints about the contract process that constitute a representation to a City employee other than the authorized contact person. Notwithstanding this provision, a bidder may not ask a procedural question of a councilmember, a councilmember's aide, or of a City board member except in a meeting held under the Texas Government Code, Chapter 551 (Open Meetings Act).

(F) Article 6 of the City Code allows representations:

- (i) made at a meeting convened by the authorized contact person, including meetings to evaluate bids or negotiate a contract;
- (ii) required by Financial Services Department protest procedures for vendors;
- (iii) made at a Financial Services Department protest hearing;
- (iv) provided to the Small & Minority Business Resources Department in order to obtain compliance with Chapter 2-9A-D (the Minority-Owned and Women-Owned Business Enterprise Procurement Program);
- (v) made to the City Risk Management coordinator about insurance requirements for a bid;
- (vi) made in public at a meeting held under the Texas Open Meetings Act; or
- (vii) made from a bidder's attorney to an attorney in the Law Department in compliance with Texas Disciplinary Rules of Professional Conduct.

(G) Communication regarding the solicitation is permitted between or among City officials or City employees acting in their official capacity.

(H) A contribution or expenditure as defined in Chapter 2-2 (Campaign Finance) is not a representation.

(4) Contract Voidable.

If a contract is awarded to a bidder who has violated these Anti- Lobbying & Procurement provisions, the contract is voidable by the Owner.

(5) Debarment.

If a bidder has been disqualified under these provisions more than two times in a sixty month period, the purchasing officer shall debar the bidder from bidding for a period not to exceed three years, provided the bidder is given written notice and a hearing in advance of the debarment.

k. **City's Minority-Owned and Women-Owned Business Enterprise / Disadvantaged Business Enterprise (MBE/WBE or DBE) Program Requirements. Good Faith Efforts.** When a bidder cannot achieve the MBE/WBE or DBE goals or subgoals established for the project, the bidder must document its Good Faith Efforts to meet the goals or subgoals. Good Faith Effort evaluations will consider, at a minimum, the bidder's efforts to do the following:

(1) Soliciting through at least two reasonable, available and verifiable means MBEs/WBEs within the Significant Local Business Presence boundaries at least seven (7) business days prior to the bid opening date to allow the MBEs/WBEs or DBEs to respond to the bid.

(2) Providing interested MBEs/WBEs or DBEs adequate information about the bid documents and requirements, including addenda, in a timely manner to assist them in responding to the bid.

(3) Negotiating in good faith with interested MBEs/WBEs DBEs that have submitted bids to the bidder.

(4) Publishing notice in a local publication such as a newspaper, trade association publication or via electronic/social media.

(5) Not rejecting MBEs/WBEs or DBEs as being unqualified without sound reasons based on a thorough investigation of their capabilities.

(6) Making economically feasible portions of the work available to MBE/WBE or DBE subcontractors and suppliers and to select those portions of the work or material needs consistent with the available MBE/WBE or DBE subcontractors and suppliers, so as to facilitate meeting the goals or subgoals.

(7) The ability or desire of the bidder to perform the project work with its own organization does not relieve the bidder of the responsibility to make Good Faith Efforts.

(8) Bidders are not required to accept higher quotes in order to meet the goals or subgoals.

(9) Effectively using the services of Minority Person/Women community organizations; Minority Person/Women Contractors groups; local, state and federal Minority Person/Women business assistance offices; and other organizations to provide assistance in solicitation and utilization of MBEs, WBEs and/or DBEs.

(10) In assessing minimum Good Faith Efforts, the OWNER may consider (1) whether the bidder sought guidance from the City of Austin Small and Minority Business Resources Department (SMBR) on any question regarding compliance with these requirements; and (2) the performance of other bidders in meeting the goals.

For additional information, refer to the MBE/WBE or DBE Compliance Program Requirements Volume of the Project Manual.

Bid shopping is not allowed in conjunction with this solicitation and may result in the disqualification of prospective bidders and subcontractors.

2. Estimates of Quantities (Unit Price Contracts Only)

Quantities listed in unit price Bid form are to be considered approximate quantities and will be used only for comparison of Bids. Payment to CONTRACTOR will be made only for actual quantities of Work performed or materials furnished in accordance with Contract and it is understood that quantities may be increased or decreased as provided in Section 00700, General Conditions, and as may be modified by Section 00810, Supplemental General Conditions.

3. Drawings, Project Manual and Site (s) of Work

Before submitting a Bid, the Bidder shall carefully examine the Bid Documents, site(s) of the proposed Work, soils, and other conditions that may affect the performance of the Work to satisfy the Bidder as to character, quality and quantities of Work to be performed and materials to be furnished. By submitting a Bid, the Bidder will be deemed to have certified that the Bidder has complied with these requirements. If, during preparation of the Bid, the Bidder discovers any suspected discrepancies or errors, the Bidder must immediately notify the Authorized Contact Person in writing of the suspected discrepancy or error. Failure to provide written notice of any suspected discrepancies or errors may be cause for rejection of the Bid.

4. Bid Guaranty

All Bids shall be accompanied by a Bid guaranty in an amount of not less than five percent (5%) of the total Bid. If the total Bid amount is $100,000 or less, Bidder has the option of providing a cashier's or certified check, made payable to City of Austin accompanied by a letter from a surety company indicating that Bidder can be bonded for the amount of the Project, or a Bid bond with Power of Attorney attached, issued by a solvent surety authorized under laws of the State of Texas and acceptable to OWNER. If the total Bid amount exceeds $100,000, the only acceptable Bid guaranty will be a Bid bond with Power of Attorney attached, issued by a solvent surety authorized under laws of the State of Texas and acceptable to OWNER.

The Bid guaranty accompanying the Bid of the three (3) apparent low Bidders will be retained until Contract is awarded and successful Bidder executes Contract and furnishes required bonds and insurance, after which Bid guaranty will be returned to the Bidders. All other Bid guaranties will be returned after Bid certification. In the event that the Bidder to whom the Contract is awarded fails to timely execute the Contract, the Bidder agrees that the OWNER in its discretion may rescind the initial award and award the Contract to the next lowest responsible Bidder.

5. Performance and Payment Bonds

When performance and/or payment bonds are required, each shall be issued in an amount equal to the Contract Amount as security for the faithful performance and/or payment of all Contractor's obligations under the Contract Documents. Performance and payment bonds shall be issued by a solvent corporate surety authorized to do business in the State of Texas, and shall meet any other requirements established by law or by OWNER pursuant to applicable law.

6. Consideration of Bid Amount

For purpose of award, after Bids are opened, read aloud, reviewed, and certified, the total amount of the Bid, including accepted Bid alternates, will be considered the amount of the Bid. Upon request, certified Bid tabulations will be made available to the public. OWNER

reserves the right to reject any or all Bids and to waive any minor informality in any Bid or solicitation procedure (a minor informality is one that does not affect the competitiveness of the Bids).

7. Submission of Bid

Each Bid must be completed and signed by person(s) authorized to bind individual, partnership, firm, corporation, or any other legal entity submitting the Bid, and, shall include the following in one envelope furnished by OWNER:

(a) One copy of Bid form (Section 00300L or 00300U) completed and signed.
(b) Acknowledgment of receipt of Addenda issued in spaces provided in Bid form.
(c) Required Bid guaranty.
(d) Copy of statement of legal entity status, as applicable, including but not limited to, as applicable, Statement of Sole Proprietorship, Articles of Partnership or Incorporation and resolution, or corporate board minutes, empowering signatory to bind Bidder, attested to by an officer of Bidder. The required information is set forth in Section 00100, Paragraph 15.
(e) One copy of the Insurance Cost Form (Section 00425A), completed and signed (ROCIP projects only).
(f) One copy of the Affidavit - Prohibited Activities (Section 00440), completed and signed.
(g) One copy of the Nonresident Bidder Provisions (Section 00475), completed and signed.
(h) One copy of the Nondiscrimination Certificate (Section 00630), completed and signed.
(i) Required information indicated in Drawings or Project Manual.

Bid must be accompanied by a MBE/WBE or DBE Compliance Plan, signed by the authorized representative described above. Compliance Plans should be submitted separately, in a second envelope, prior to the date and time set forth in Section 00020, Invitation for Bids. The Compliance Plan forms are included in the MBE/WBE Procurement Program Package or DBE Procurement Program Package (a separately bound volume).

Bid shall include all specified items in this section and be placed in a sealed envelope, clearly identified on outside as a Bid to OWNER, with Bidder's name and address, project name, bid due date/time, signed acknowledgement of the number of Addenda received and authorized signature. Failure to submit Bid appropriately may subject Bidder to disqualification. Bid may be mailed or delivered (in person or by Federal Express, Express Mail or other delivery service) to:

City of Austin
Capital Contracting Office
One Texas Center
505 Barton Springs Rd.
Suite 1045-C
Austin, Texas 78704

When sent by mail, Federal Express, Express Mail, or other delivery service, sealed Bid (marked as indicated above) shall be enclosed in an additional envelope, or other appropriate packaging, clearly identified on outside as a Bid to OWNER with Bidder's name and address, Project name, and Bid date and time. It is the sole responsibility of the Bidder to ensure timely delivery of Bid. OWNER will not be responsible for failure of service on the part of the U.S. Post Office, courier services, or any other form of delivery service chosen by the Bidder. (See Section 00820, Modifications to Bidding Requirements and Contract Forms, for modifications to solicitations without MBE/WBE or DBE goals.)

In submitting its Bid, Bidder certifies that it has not lobbied the City or its officials, managers, employees, consultants, or contractors in such a manner as to influence or to attempt to influence the bidding process. In the event it reasonably appears that the Bidder influenced or attempted to influence the bidding process, the City may, in its discretion, reject the Bid.

8. Withdrawal of Bid

A Bid may be withdrawn by a Bidder, provided an authorized individual of the Bidder submits a written request to withdraw the Bid prior to the time set for opening the Bids.

9. Rejection of Bids

A. The following **will** be cause to reject a Bid:

(1) Failure to submit Section 00300 (Bid Form) and signed by an individual empowered to bind the Bidder.

(2) Bids which are not accompanied by acceptable Bid guaranty, with Power of Attorney attached, or a letter certifying the Bidder's ability to be bonded, from a surety company, in accordance with Paragraph 4 above.

(3) More than one Bid for same Work from an individual, firm, partnership or corporation.

(4) Evidence of collusion among Bidders.

(5) Sworn testimony or discovery in pending litigation with OWNER which discloses misconduct or willful refusal by contractor to comply with subject contract or instructions of OWNER.

(6) Failure to submit MBE/WBE or DBE Compliance Plan in accordance with the separately bound volume titled MBE/WBE Procurement Program Package or DBE Procurement Program Package.

(7) Failure to have an authorized agent of the Bidder attend the mandatory Pre- Bid Conference, if applicable.

(8) Bids received from a Bidder who has been debarred or suspended by OWNER's Purchasing Officer.

(9) Bids received from a Bidder when Bidder or principals are currently debarred or suspended by Federal, State or City governmental agencies. (Applicable for Bid amounts equal to or in excess of $25,000.00).

(10) Failure to submit any of the items specified above in paragraph 7, "Submission of Bid".

B. The following **may** be cause to reject a Bid:

(1) Poor performance in execution of work under a previous City of Austin contract.

(2) Failure to achieve reasonable progress on an existing City of Austin contract.

(3) Default on previous contracts or failure to execute Contract after award.

(4) Evidence of failure to pay Subcontractors, Suppliers or employees in accordance with Contract requirements.

(5) Bids containing omissions, alterations of form, additions, qualifications or conditions not called for by OWNER, or incomplete Bids may be rejected. In any case of ambiguity or lack of clarity in the Bid, OWNER reserves right to determine most advantageous Bid or to reject the Bid.

(6) Failure to acknowledge receipt of Addenda.

(7) Failure to submit any of the items specified below in paragraph 11, "Submission of Post Bid Information".

(8) Failure to identify a dollar amount (price) of a unit price(s) in the 00300U including all Bid Alternates in the Bid Form 00300U or 00300L

(9) Failure to submit post-Bid information within the allotted time(s) (see paragraph 11 for post-Bid requirements)

(10) Failure to timely execute Contract after award.

(11) Previous environmental violations resulting in fines or citations by a governmental entity (i.e. U.S. Environmental Protection Agency, Texas Commission on Environmental Quality, etc.).

(12) Safety record as set forth in Section 00410, Statement of Bidder's Safety Experience.

(13) Failure of Bidder to demonstrate the minimum experience required as specified in Section 00400 if that Section is included in the bidding documents.

(14) Evidence of Bidder's lack of sufficient resources, workforce, equipment or supervision, if required by inclusion of appropriate attachments in Section 00400.

(15) Evidence of poor performance on previous Projects as documented in Owner's project performance evaluations.

(16) Unbalanced Unit Price Bid: "Unbalanced Bid" means a Bid, which includes a Bid that is based on unit prices which are significantly less than cost for some Bid items and significantly more than cost for others. This may be evidenced by submission of unit price Bid items where the cost are significantly higher/lower than the cost of the same Bid items submitted by other Bidders on the project.

10. Protest Procedures

The OWNER's Capital Contracting Office Director has the authority to settle or resolve any claim of an alleged deficiency or protest. The procedures for notifying OWNER of an alleged deficiency or filing a protest are listed below. If you fail to comply with any of these requirements, the Capital Contracting Office Director may dismiss your complaint or protest.

Prior to Bid opening: If you are a prospective Bidder and you become aware of the facts regarding what you believe is a deficiency in the solicitation process before the Bid is opened, you must notify OWNER in writing of the alleged deficiency before that date, giving OWNER an opportunity to resolve the situation prior to the Bid opening.

After Bid opening: If you submit a Bid to OWNER and (1) you have been found non-responsive, or
(2) you believe that there has been a deficiency in the solicitation process or the award, you have the opportunity to protest the solicitation process or the recommended award as follows:

1. You must file written notice of your intent to protest within four (4) calendar days of the date that you know or should have known of the facts relating to the protest. If you do not file a written notice of intent within this time, you have waived all rights to protest the solicitation process or the award.
2. You must file your written protest within fourteen (14) calendar days of the date that you know or should have known of the facts relating to the protest unless you know of the facts before the Bid has been opened. If you know of the facts before that date, you must notify OWNER as stated above.
3. You must submit your protest in writing and must include the following information:
    a. your name, address, telephone, and email address;
    b. the solicitation number and the CIP number, if applicable;
    c. a detailed statement of the factual grounds for the protest, including copies of any relevant documents.
4. Your protest must be concise and presented logically and factually to help with OWNER's review.
5. When OWNER receives a timely written protest, the Capital Contracting Office Director will determine whether the grounds for your protest are sufficient. If the Capital Contracting Office Director decides that the grounds are sufficient, the Capital Contracting Office will schedule a protest hearing, usually within five (5) working days. If the Capital Contracting Office Director determines that your grounds are insufficient, you will be notified of that decision in writing.
6. The protest hearing is informal and is not subject to the Open Meetings Act. The purpose of the hearing is to give you a chance to present your case; it is not an adversarial proceeding. Those who may attend from OWNER are: representatives from the department that requested the purchase, the Law Department, the Capital Contracting Office, and other appropriate City staff. You may bring a representative or anyone else that will present information to support the factual grounds for your protest with you to the hearing.
7. A decision will usually be made within fifteen (15) calendar days after the hearing.
8. The Capital Contracting Office Director will send you a copy of the hearing decision after the appropriate City staff has reviewed the decision.
9. When a protest is filed, OWNER usually will not make an award until a decision on the protest is made. However, OWNER will not delay an award if the City Manager or the Capital Contracting Office Director determines that:
    a. OWNER urgently requires the supplies or services to be purchased, or
    b. Failure to make an award promptly will unduly delay delivery or performance.

In those instances, the Capital Contracting Office will notify you and make every effort to resolve your protest before the award.

The protest or notice of intent and the protest shall be submitted in writing to the following address:

City of Austin
Capital Contracting Office
ATTN: Capital Contracting Officer
One Texas Center
505 Barton Springs Rd.

Suite 1045-A
Austin, Texas 78704
PHONE: 512/974-7141

11. Submission of Post Bid Information

Prior to determination of the certified low Bidder, the three (3) apparent low Bidders must submit to OWNER the following information within three (3) business days of receipt of notice of apparent low Bidder status by the OWNER:

1. One copy of Attachments A-I and any other specifically designated Attachments of the Statement of Bidder's Experience (Section 00400), completed and signed. (Unless provided to the contrary in Section 00820 Modifications to Bidding Requirements and Contract Forms).
2. One Copy of the Certificate of Non-Suspension or Debarment (Section 00405), completed and signed. (Applicable for Bid amounts equal to or in excess of $25,000.00.)
3. One copy of Section 00410, Statement of Bidder's Safety Experience, including required attachments, completed and signed.
4. One copy of the Title VI Assurances Appendix A (Section 00631), completed and signed.
5. One copy of Exhibit A Federal Provisions (Section 00810A, pages 1-9) completed and signed. (Federal projects only)
6. Such other information as is required to evaluate Bid or Bidder.

Upon notification of status as certified low Bidder, Bidder shall submit the following information to OWNER within three (3) business days:

1. Letter(s) of intent between Bidder and all subcontractor(s) and all supplier(s) identified in the MBE/WBE Compliance Plan.
2. Section 00425B, VII Subcontractor Affidavit of Receipt and Provision of ROCIP Information (for Subcontractor(s) of all tiers identified in the MBE/WBE Compliance Plan). For ROCIP projects.
3. Such other information as required. (Note: OWNER reserves the right to solely determine whether the comparable experience documentation provided by the Bidder is sufficient and relevant to the Work described in the Contract Documents for the Bidder to be considered a responsible Bidder. In addition, the Bidder acknowledges and agrees that the failure to timely provide the additional information required by this section will result in a determination that, for the purposes of this solicitation, the Bidder has not provided sufficient information for the OWNER to be able to determine that the Bidder is a responsible Bidder.)

12. Award and Execution of Contract

OWNER will process Bids expeditiously. Award of Contract will be to the lowest, responsible Bidder meeting all requirements of the Bid Documents. OWNER may not award Contract to a nonresident Bidder unless the nonresident underbids the lowest Bid submitted by a responsible resident Bidder by an amount that is not less than the amount by which a resident Bidder would be required to underbid the nonresident Bidder to obtain a comparable contract in the state in which the nonresident's principal place of business

is located.

Award of Contract will occur within the period identified on the Bid form, unless mutually agreed between the parties. Capital Contracting Office Director shall submit recommendation for award to the City Council for those project awards requiring City Council action. Contract will be signed by City Manager or his/her designee after award and submission of required documentation by Bidder. Contract will not be binding upon OWNER until it has been executed by both parties. OWNER will process the Contract expeditiously. However, OWNER will not be liable for any delays prior to the award or execution of Contract.

Upon contract award, the selected Bidder must submit either their existing or an updated personnel policy (on letterhead) documenting conformity with City Code, Chapter 5-4, § 5-4-2. If the company does not submit a copy of their personnel policy incorporating the non-discrimination policy, the City of Austin Nondiscrimination Policy (Section 00630) will be considered the Bidder's nondiscrimination policy.

In any case of ambiguity or lack of clarity in the Bid, OWNER reserves the right to determine the most advantageous Bid or to reject the Bid.

Notwithstanding anything in this Section 00100 to the contrary, the OWNER may award a contract for construction services in an amount of less than $100,000 to a bidder whose principal place of business is in the City of Austin and whose bid is within 5% of the lowest bid price received from a bidder whose principal place of business is not within the City of Austin, if the City finds that the local bidder offers the City the best combination of contract price and additional economic development opportunities for the City created by the contract award including the employment of resident of the City and increased tax revenues to the City.

13. Partnering

In order to complete the Work in a manner that is most beneficial to the OWNER and CONTRACTOR, OWNER and CONTRACTOR may form a "Partnering Team", which will include the E/A, and any major Subcontractors. This partnering relationship will draw on the strength of all parties to identify and achieve mutual goals. The objectives of this partnering relationship are effective and efficient communication and Contract performance, which is intended to ensure that the Project is completed within budget, on schedule, and in accordance with the Drawings and Specifications and other Contract requirements. While the partnering relationship will be multilateral in makeup and participation will be totally voluntary, the OWNER and CONTRACTOR agree to cooperate and use reasonable good faith efforts to discuss and resolve any and all Project issues and disputes. Section 01100, Special Project Procedures and/or Section 01200, Project Meetings contain additional information regarding the intent of the partnering relationship and responsibilities of the entities entering into the partnering charter.

14. ROCIP Requirements

If the insurance on this Project will be under the Rolling Owner Controlled Insurance Program (ROCIP), the Bidder is directed to Section 00810, Supplemental General Conditions, Section 00820, Modifications to Bidding Requirements and Contract Forms, and the Project Safety Manual included with these contract documents for information and bidding requirements.

The Insurance Cost Form, Section 00425A, Rolling Owner Controlled Insurance Program Information Section 00425B, VI Contractor Affidavit of Receipt and Provision of ROCIP Information must be accurately completed and submitted with the Bid to indicate

insurance removed from Base Bid and Alternates. CONTRACTOR shall remove from the Bid the cost of insurance for the CONTRACTOR and Subcontractors of all tiers working on site.

The Statement of Bidder's Safety Experience, Section 00410, must be accurately completed and submitted with the Bid.

The Rolling Owner Controlled Insurance Program Information, Section 00425 B, VII Subcontractor Affidavit of Receipt and Provision of ROCIP Information for subcontractor(s) of all tiers identified in the MBE/WBE Compliance Plan must be accurately completed and submitted as a post bid submittal and further Subcontractor Affidavits must be submitted throughout the duration of the Contract as Subcontractor(s) are added.

15. Signature Requirements

The Bid and any subsequent supporting Bid documents and Contract must be executed in the Bidder's full name and legal entity status by an authorized representative of the Bidder and accompanied by sufficient documentation, which clearly indicates not only the legal name and entity status of Bidder, but also the capacity and authority of the person signing on behalf of Bidder. Accordingly, a partnership/joint venture must file its partnership/joint venture agreement, a corporation must file its articles and bylaws, a limited liability company must file its certificate of organization and article of organization and regulations, and a limited partnership must file not only limited partnership agreement and the certificate of limited partnership, but also the documentation for its general partner, and any Bidder must file a copy of any assumed name certificate, or such limited portion of such documents reasonably establishing signature authority.

The following samples show the entity information and signature requirements that will apply to all Bid and contract execution documents for the type of entity indicated:

1. Individual/Sole Proprietor (sample)

   The individual/sole proprietor must sign the document in his or her personal capacity or in any assumed name capacity accompanied by a copy of any assumed name certificate.

   Name of Contractor (d/b/a, if appropriate), a sole

   proprietor By: _____

   Printed Name:_____

2. Partnership/Joint Venture (sample)

   A partner/joint venturer must sign the document in his or her capacity as a partner/joint venturer and in any assumed name capacity accompanied by a copy of the assumed name certificate, if any, and a copy of the partnership or joint venture agreement, as applicable, with additional documentation, if necessary, establishing the authority of the signatory individual.

   Name of Partnership/Joint Venture, a Texas Partnership/JV, as

   appropriate By: _____

   Printed or Typed Name: _____

   Title:_____(Partner, managing partner, venturer, managing venturer, as approp.)
   Authorized Representative

3. Corporation (sample)

An authorized officer or agent of the corporation must sign the documents on behalf of the corporation in his or her capacity as the authorized representative of the corporation accompanied by a copy of a corporate resolution and minutes granting such authority with a certificate of an officer of the corporation as to the authority of the signatory to bind the CONTRACTOR signed and dated no more than one week before the date of execution of the document.

Name of Contractor, Inc. or Co., a Texas corporation, as

appropriate By: _____

Printed or Typed Name: _____

Title:_____(Officer or Agent (as appropriate)) Authorized Representative

4. Limited Liability Company (sample)

An authorized manager or member of the LLC must sign the document in his or her capacity as a manager or member accompanied by a copy of the LLC's certificate of organization and articles of organization and regulations evidencing such person's signatory authority.

Name of Contractor, L.L.C., a Texas limited liability company, as

appropriate By:_____,

Printed or Typed Name:_____

Title:_____, (Manager or Member (as appropriate)) Authorized Representative

5. Limited Partnership (sample)

The general partner of a limited partnership must execute the documents on behalf of the limited partnership, accompanied by copy of the limited partnership agreement and the certificate of limited partnership. In addition, the signatory must sign the documents in his or her capacity as an authorized officer or agent of the corporation or member or manager of the LLC, as appropriate, accompanied by a copy of the corporate or LLC documentation stipulated above.

Name of Contractor, Ltd., a Texas limited partnership, as

appropriate By: Name of General Partner (usually a Texas

corporation or an L.L.C.) By: _____

Printed or Typed Name:_____

Title:_____Officer or Agent of Corporation or LLC Authorized Representative

16. Contractor Evaluation

The Owner will review and evaluate the Contractor's Work and performance on the Project and provide the Contractor with a written Contractor Evaluation Report in accordance with

City of Austin Administrative Rule R161-13.37. Rule R161-13.37 provides an appeal process.

http://www.austintexas.gov/department/contract-management

17. Texas Ethics Commission Certificate of Interested Parties Disclosure Form

(1) Definitions:

(A) "Interested Party" – means a person who has a controlling interest in a Business Entity with whom the Owner contacts or who actively participates in facilitating the Contract or negotiating the terms of the Contract, including a broker, intermediary, adviser, or attorney for the Business Entity.

(B) "Business Entity" – means any entity recognized by law through which business is conducted, including a sole proprietorship, partnership, or corporation.

(2) As a condition to entering the Contract, the Business Entity constituting the successful Bidder must provide a Texas Ethics Commission Certificate of Interested Parties Form to the Owner at the time the Business Entity/Bidder submits the signed Contract to the Owner in full compliance with the following requirements under which the successful Bidder shall:

(i) go to the Ethics Commission's website (www.ethics.state.tx.us),

(ii) complete the "Interested Parties" information, in accordance with the requirements of the Texas Ethics Commission Rules published at Title 1, Part 2, Chapter 46, of the Texas Administrative Code and available on the referenced website,

(iii) include the City's contract identification number,

(iv) include a short description of the goods or services to be used by the City, and

(v) indicate whether each interested party has a controlling interest in the business entity, is an intermediary in the contract for which the disclosure is being filed, or both.

(3) In accordance with the Commission Rules, the Certificate of Filing and completed Certificate of Interested Parties must be (i) printed, (ii) signed by an authorized agent of the business entity, and (iii) submitted to the City at the time of the submission of the signed contract to the City. The City then must notify the Ethics Commission in electronic format of receipt of the document within 30 days of contracting and the Commission will make the disclosure of interested parties available to the public on its website.

End

UNIT PRICE BID FORM

Section 00300U

The undersigned, in compliance with the Invitation for Bids for construction of the following Project: **Four Points Elevated Reservoir Improvements**

(CIP ID#2127.034) (IFB# CLMC624) for the City of Austin, Texas, having examined the Project Manual, Drawings and Addenda, the site of the proposed Work and being familiar with all of the conditions surrounding construction of the proposed Project, having conducted all inquiries, tests and investigations deemed necessary and proper; hereby proposes to furnish all labor, permits, material, machinery, tools, supplies and equipment, and incidentals, and to perform all Work required for construction of the Project in accordance with the Project Manual, Drawings and Addenda within the time indicated for the following prices of:

Note: The Bidder will enter the line item subtotal in the "Amount" column below, which is the product of the estimated "Quantity" multiplied by the "Unit Price". Any mathematical errors will be corrected for the purpose of determining the correct Amount to be entered in the Bid Form. The Amounts, including any corrected Amounts, will then be totaled to determine the actual amount of the Bid.

MINIMUM WAGES: Workers on Project shall be paid not less than wage rates, including fringe benefits, as published by the Department of Labor (DOL) for Building Construction and Heavy and Highway Trades "AS APPLICABLE" and/or the $13.50 minimum wage required by City of Austin Ordinance No. 20160324-015, whichever is higher. The Total Minimum Wage required can be met using any combination of cash and non-cash qualified fringe benefits provided the cash component meets or exceeds the $13.50 minimum wage required.

Bid Item	Quantity	Unit	Item Description	Unit Price	Amount
FPE-1	1	LS	Mobilization/Demobilization complete as specified.	$_____	$_____
FPE-2	1	LS	Install CIP Sign, Complete as Specified.	$_____	$_____
FPE-3	1	LS	Furnish Project Field Office/Job Shack at the site, complete as specified.	$_____	$_____
FPE-4	150	LF	Furnish Excavation Safety System (All Depths) for Utility and Structure Construction, Complete as Specified.	$_____	$_____
FPE-5	3500	SY	Native Seeding for Erosion Control Method, Hydraulic Planting, Complete as Specified and Indicated on the Drawings.	$_____	$_____

Bid Item	Quantity	Unit	Item Description	Unit Price	Amount
FPE-6	493	LF	Protective Fencing, Type A, Chain Link Fence (For Tree Protection), Complete as Specified and Indicated on the Drawings.	$_____	$_____
FPE-7	1	EA	Stabilized Construction Entrance, Complete as Specified and Indicated on the Drawings.	$_____	$_____
FPE-8	350	LF	Silt Fence for Erosion Control, Complete as Specified and Indicated on the Drawings.	$_____	$_____
FPE-9	1370	LF	Reconstruction of Existing Chain Link Fence, Including Replacement of Fence Fabric, Replacement of Gates, Removal of Vegetation, Rehabilitation of Mow Strip, Removal of Existing Barbed Wire Fence (subsidiary to this item, not included in quantity) and All Appurtenant Work relating to Fencing, Complete as Specified and Indicated on the Drawings.	$_____	$_____
FPE-10	1	LS	Provide Miscellaneous Fine Grading at the Site, Including Disposal of All Excess Soil and Importing Top Soil as Required to Provide Positive Drainage at the Site and All Appurtenant Work, Complete as Specified and Indicated on the Drawings.	$_____	$_____

Bid Item	Quantity	Unit	Item Description	Unit Price	Amount
FPE-11	1	LS	Regrade Existing Detention Pond and Construction of Pond Overflow Structure, Including Disposal of Excess Soil, and all Appurtenant Work Related to the Detention Pond and Structures, Complete as Specified and Indicated on the Drawings.	$_____	$_____
FPE-12	1	LS	Remove and Replace Existing Concrete Flume and Overflow Structures and Construct Proposed Concrete Flume, Splash Wall and Overflow Structure, Including Excavation, Backfill and All Appurtenant Work, Complete as Specified and Indicated on the Drawings.	$_____	$_____
FPE-13	1	LS	Modify Elevated Tank Overflow Piping and Drains at Proposed Overflow Structure, Including Overflow Flap Valve and All Appurtenant Work, Complete as Specified and Indicated on the Drawings.	$_____	$_____
FPE-14	1	LS	Removal of Exterior Piping Insulation at Elevated Storage Tank and Recoat, Including All Appurtenant Work, Complete as Specified and Indicated on the Drawings.	$_____	$_____
FPE-15	1	LS	Install Bridge Over Flume, Including All Appurtenant Work, Complete as Specified and Indicated on the Drawings.	$_____	$_____

Bid Item	Quantity	Unit	Item Description	Unit Price	Amount
FPE-1	1	LS	Pressure Relief Valve Vault, Including Excavation, Backfill, Concrete Structure, Grating, Vault Piping, Yard Piping, Ductile Iron Fittings, Thrust Blocking, Piping Tie-Ins, Valves, Top Grating, Coatings, Electrical, Instrumentation, and All Appurtenant Work, Complete as Specified and Indicated on the Drawings.	$_____	$_____
FPE-2	15	EA	Replace Damaged and Adjust Site Valve Boxes to Grade, Including Installation of Concrete Collar, Complete as Specified and Indicated on the Drawings.	$_____	$_____
FPE-3	1	LS	Venturi Meter Vault Modifications, Removal of Ladder, Relocation of Instrumentation, Replacement of All Corroded Piping Hardware, Sump Pump Modifications, Coating Rehabilitation, and All Appurtenant Work for the Venturi Meter Vault, Complete as Specified and Indicated on the Drawings.	$_____	$_____
FPE-4	1	LS	Replace 30-inch Coupling, Hardware and Restraints in Venturi Meter Vault, Including All Appurtenant Work, Complete as Specified and Indicated on the Drawings.	$_____	$_____

Bid Item	Quantity	Unit	Item Description	Unit Price	Amount
FPE-16	1	LS	Demolish Existing Hydropneumatic Tank, Including Complete Removal of Tank, Concrete Foundations, Abandonment of Water and Electrical Utilities, and All Appurtenant Work Complete as Specified and Indicated on the Drawings.	$_____	$_____
FPE-17	1	LS	Rehabilitation of Existing Asphalt Driveway and Parking Area to Sitio Del Rio Blvd., Including Seal Coat, Removal of Sediment, Sealing of Cracks and Joints, Rehabilitation of the Curb and Gutter and All Appurtenant Work Related to Pavement Rehabilitation, Complete as Specified and Indicated on the Drawings.	$_____	$_____
FPE-18	4	EA	Coat Existing Valve Operators in Vaults, Complete as Specified and Indicated on the Drawings.	$_____	$_____
FPE-19	1	LS	Coat Miscellaneous Above Grade Appurtenances, Including, but not limited to Valve Operators and Fire Hydrants, Complete as Specified and Indicated on the Drawings.		

Bid Item	Quantity	Unit	Item Description	Unit Price	Amount
FPE-20	1	LS	Provide 1st Floor Interior Pedestal Piping Modifications to 12" Fill and Overflow Valves and Piping, Including Proposed Piping, Replacement of Existing Valves and Fittings, Coatings, Chain Operators and All Appurtenant Work within the 1st Floor not Specifically Included in other Bid Items, Complete as Specified and Indicated on the Drawings.	$_____	$_____
FPE-21	1	LS	Provide 1st Floor Interior Pedestal Pump and Piping Rehabilitation, Including Recoating Pumps, Piping and Valves, Installation of Proposed 16" Piping and Valves and All Appurtenant Work, Complete as Specified and Indicated on the Drawings.	$_____	$_____
FPE-22	1	LS	Provide 1st Floor Interior Pedestal Improvements in Pipe Chase, Including Modifications to Pump Seal Drains, Removal of Valve, Replacement of Instrumentation Tap and Piping, Coatings and All Appurtenant Work, Complete as Specified and Indicated on the Drawings.	$_____	$_____
FPE-23	1	LS	Replace Tank Pedestal Wash Out Water Line with 3" Galvanized Steel, Including Valves, Pipe Supports and All Appurtenant Work, Complete as Specified and Indicated on the Drawings.	$_____	$_____

Bid Item	Quantity	Unit	Item Description	Unit Price	Amount
FPE-24	1	LS	Install Water Sample Lines from Tank Riser Tube to 1st Floor of Pedestal, Including Taps in Dry Well, Valves, Piping, Supports, Insulation, Heat Tracing, Labeling and All Appurtenant Work, Complete as Specified and Indicated on the Drawings.	$_____	$_____
FPE-25	1	LS	Rehabilitate Vertical Pedestal Piping, Including Installation of Isolation Kits, Gaskets, Replacement of Corroded Hardware, Coating Improvements and All Appurtenant Work, Complete as Specified and Indicated on the Drawings.	$_____	$_____
FPE-26	1	LS	Replace 6" Drain Gate Valve at Top Platform, including All Fittings Required to Complete the Work, Complete as Specified and Indicated on the Drawings.	$_____	$_____
FPE-27	1	LS	Modify 6" Drain Line at Exterior Pedestal, including All Fittings and Appurtenances, Complete as Specified and Indicated on the Drawings.	$_____	$_____
FPE-28	1	LS	Remove and Replace all Ladders and Platforms within the 1st Floor and within the Pedestal, Including Hatch Modifications, Safety Systems, Hatch Guardrails and All Appurtenant Work, Complete as Specified and Indicated on the Drawings.	$_____	$_____

Bid Item	Quantity	Unit	Item Description	Unit Price	Amount
FPE-29	1	LS	Provide all Improvements to the Pedestal Upper Platform, Including Modifications to Grating, Installation of Hoist and Mounts and All Appurtenant Work, Complete as Specified and Indicated on the Drawings.	$_____	$_____
FPE-30	1	LS	Provide all Improvements Within the Riser Tube, Including Installation of Grating, Pressure Transducer Tap, Replacement of Riser Tube Ladder and Safety System, Pipe Supports and All Appurtenant Work in the Riser Tube, Complete as Specified and Indicated on the Drawings.	$_____	$_____
FPE-31	1	LS	Rehabilitate Interior of Steel Tank, Including Crow's Nest Modifications, Removal of Painter's Rail, Removal and Replacement of Ladders with Safety Systems, Installation of Grab Bar, Modifications to Tank Floor Drainage, Modifications at Inlet/Outlet Pipe and All Appurtenant Work within the Tank and Not Included in Other Bid Items, Complete as Specified and Indicated on the Drawings.	$_____	$_____

Bid Item	Quantity	Unit	Item Description	Unit Price	Amount
FPE-32	1	LS	Rehabilitate Tank Roof Including Replacement of Existing Hatches and Vent, Modifications for Proposed Cathodic Protection System, Hoist and Mounts, Installation of Roof Guardrail and All Appurtenant Work on the Tank Roof, Complete as Specified and Indicated on the Drawings.	$_____	$_____
FPE-33	1	LS	Provide Surface Preparation, including Abrasive Blasting of Interior of Tank and Appurtenances (SSPC-SP10) and Coat, Complete as Specified.	$_____	$_____
FPE-34	1	LS	Provide Surface Preparation, Including Abrasive Blasting of Exterior of Tank and Appurtenances (SSPC-SP6) and Coat, Complete as Specified.	$_____	$_____
FPE-35	1	LS	Provide Surface Preparation, Including Abrasive Blasting of Interior Dry of Tank and Appurtenances (SSPC-SP6) and Coat, Complete as Specified.	$_____	$_____
FPE-36	1	LS	Provide Dehumidification of Interior of Tank During Abrasive Blasting, Coating and Coating Curing, Complete as Specified.	$_____	$_____
FPE-37	1	LS	Remove and Replace Existing Elevated Reservoir Cathodic Protection System, Including all Appurtenant Work, Complete as Specified and Indicated on the Drawings.	$_____	$_____

Bid Item	Quantity	Unit	Item Description	Unit Price	Amount
FPE-38	1	LS	Installation of Elevated Reservoir Tank Grounding and Lightning Protection System, Including all Appurtenant Work, Complete as Specified and Indicated on the Drawings.	$_____	$_____
FPE-39	1	LS	Provide all Electrical and Instrumentation, Including Removing and Replacing Elevated Tank Personnel Ladder Lighting within the Pedestal, Riser Tube and within the Tank, Pressure Transducer in Riser Pipe, Replacement and Relocation of Conduits within the Pedestal including Supports, and all Appurtenant Electrical and Instrumentation Work Not Included in Other Bid Items, Complete as Specified and Indicated on the Drawings.	$_____	$_____
FPE-40	100	MH	Additional Interior Grinding	$_____	$_____
FPE-41	100	LF	Additional Seam Welding	$_____	$_____
FPE-42	100	IN^2	Additional Pit Welding	$_____	$_____
FPE-43	20	GAL	Additional Pit Filling	$_____	$_____
FPE-44	200	MH	Miscellaneous Welding	$_____	$_____

ALLOWANCES

	Item Description	Amount
Allowance 1	Provide Four Points Pump Station & Reservoirs Security Upgrade as Indicated in Appendix A.	$4,000.00
Allowance 2	Miscellaneous Additional Work	$20,000.00

TOTAL BID (INCLUDING ALLOWANCE(S))..... **$_____**

In the event of a mathematical error, the correct product, determined by using the "Unit Price" and "Quantity", and the correct sum, determined by totaling the correct line item Amounts, will prevail over the amount entered by the Bidder. The unit prices shown above will be the unit prices used to tabulate the Bid and used in the Contract, if awarded by the City.

Notes:

- For a more detailed explanation of Bid allowances, see Section 1020.

Optional Information on Bid Prices Submitted by Computer Printout

In lieu of handwritten unit prices in figures in ink on the Bid forms above, Bidders, at their option, may submit an original computer printout sheet bearing certification by, and signature for, the Bidding firm. The unit prices shown on acceptable printouts will be the unit prices used to tabulate the Bid and used in the Contract if awarded by the City. As a minimum, computer printouts must contain all information and in the format shown on the attached page: "Example of Bid Prices Submitted by Computer Printout" form.

If a computer printout is used, the Bidder must still execute that portion of the unit price Bid form which acknowledges the Bid Guaranty, Time of Completion, Liquidated Damages, and all addenda that may have been issued.

Bids with unit prices by computer printout may be rejected, if:

1. The computer printout does not include the required certification, set forth in the attached "Example".
2. The computer printout is not signed in the name of the firm to whom the Project Manual was issued.
3. The computer printout is non-responsive or otherwise omits required Bid items or includes items not shown on the Bid forms in the Project Manual.
4. The other required Bid documents issued by the City are not fully executed as provided above.
5. The signed Section 00300U is not returned with the signed computer printout.

If the Bid submitted by the Bidder contains both the form furnished by the City, completed according the instructions, and also a computer printout, completed according to the instructions, unit prices of only one will be considered. In this situation, the unit Bid prices shown on the computer printout will be used to determine the Bid.

BID GUARANTY: A Bid guaranty must be enclosed with this Bid, as required in Section 00020, in the amount of not less than five percent (5%) of the total Bid. Following the Bid opening,

submitted Bids may not be withdrawn for a period of (120) Calendar Days. Award of Contract will occur within this period, unless mutually agreed between the parties. The Bid guaranty may become the property of the OWNER, or the OWNER may pursue any other action allowed by law, if:

- Bidder withdraws a submitted Bid within the period stated above;
- Bidder fails to submit the required post Bid information within the period specified in Section 00020 or 00100, or any mutually agreed extension of that period;
- or Bidder fails to execute the Contract and furnish the prescribed documentation (bonds, insurance, etc.) needed to complete execution of the Contract within five (5) Working Days after notice of award, or any mutually agreed extension of that period.

TIME OF COMPLETION: The undersigned Bidder agrees to commence work on the date specified in the written "Notice to Proceed" to be issued by the OWNER and to **substantially** complete construction of the improvements, as required by the Project Manual, Drawings and Addenda for the Work within **one hundred sixty (160) Calendar Days. If a Substantial Completion date has been specified, the Bidder further agrees to reach Final Completion within sixty (60) Calendar Days after Substantial Completion as required by the Project Manual, Drawings and Addenda for the work.** The Bidder further agrees that should the Bidder fail to **substantially complete the Work or to finally** complete the Work within the number of days indicated in the Bid or as subsequently adjusted, Bidder shall pay the liquidated damages for each consecutive day thereafter as provided below; unless the OWNER elects to pursue any other action allowed by law.

WAIVER OF ATTORNEY FEES: In submitting its bid, in consideration for the waiver of its right to attorney's fees by the OWNER, the Bidder knowingly and intentionally agrees to and shall waive the right to attorney's fees under Section 271.153 of the Texas Local Government Code in any administrative proceeding, alternative dispute resolution proceeding, or litigation arising out of or connected to any Contract awarded pursuant to this solicitation process.

LIQUIDATED DAMAGES: The Bidder understands and agrees that the timely completion of the described Work is of the essence. The Bidder and OWNER further agree that the OWNER's actual damages for delay caused by failure to timely complete the Project are difficult, if not impossible to measure. However, with respect to the additional administrative and consultant costs to be incurred by OWNER, the reasonable estimate of such damages has been calculated and agreed to by OWNER and Bidder. Therefore, the Bidder and the OWNER agree that for each and every **Calendar Day** the Work or any portion thereof, remains incomplete after the **Substantial Completion** date as established by the above paragraph, "Time of Completion", payment will be due to the Owner in the amount of **one thousand dollars ($1,000.00)** per **Calendar Day** as liquidated damages, not as a penalty, but for delay damages to the OWNER. **If both Substantial and Final Completion dates have been specified, the Bidder and the OWNER further agree that for each and every Calendar Day the Work or any portion thereof, remains incomplete after the Final date as established by the above paragraph, "Time of Completion", payment will be due to the OWNER in the amount of five hundred dollars ($500.00) per Calendar Day as liquidated damages, not as a penalty, but for delay damages to the OWNER.** Such amount shall be deducted by the OWNER from any Contract payment due. In the event of a default or breach by the CONTRACTOR and demand is made upon the surety to complete the project, in accordance with the Contract Documents, the surety shall be liable for liquidated damages pursuant to the Contract Documents in the same manner as the CONTRACTOR would have been.

OWNER reserves the right to reject any or all Bids and to waive any minor informality in any Bid or solicitation procedure (a minor informality is one that does not affect the competitiveness of the Bids).

The undersigned acknowledges receipt of the following addenda:

Addendum No. 1 dated _____ Received _____

Addendum No. 2 dated _____ Received _____

Addendum No. 3 dated _____ Received _____

Addendum No. 4 dated _____ Received _____

Addendum No. 5 dated _____ Received _____

BID DOCUMENT EXECUTION AND ACKNOWLEDGEMENT:

The undersigned Bidder certifies that he/she has read and understands the Section 00020 Invitation for Bids, the Section 00100 Instructions to Bidders, and all other requirements applicable to the bidding process provided in the Bid and Contract Documents.

Bidder will initial each of the blanks set forth below to represent and certify that the Bidder has completed, executed, and enclosed the corresponding supplemental Bid Documents with its Bid.

Bidder acknowledges and agrees by its signature below that in addition to any signatures required to be set forth in the following supplemental Bid Documents, Bidder is bound to the terms and conditions of each of the following documents, which are incorporated herein by reference:

_____ 00425A Insurance Cost Form *(ROCIP projects only)*

_____ 00440 Affidavit - Prohibited Activities

_____ 00475 Nonresident Bidder Provisions

_____ 00630 Non-Discrimination and Non-Retaliation Certificate
(NOTE: THIS FORM MUST STILL BE SEPARATELY SIGNED AND PROPERLY NOTARIZED)

_____ MBE/WBE Compliance Document

_____	_____
Secretary, *if Bidder is a Corporation	Bidder
	_____
(Seal)	Authorized Signature
	_____
	Title
	_____
	Date
	_____
	_____
	Address
	_____
	Telephone Number / FAX Number
	_____
	Email Address for Person Signing Bid
	_____
	Email Address for Bidder's Primary Contact Person

* Copy of Corporate Resolution and minutes with certificate of officer of Bidder as to authority of signatory to bind Bidder is to be signed and dated no earlier than one week before Bid date, and attached to this document.

EXAMPLE: BID PRICES SUBMITTED BY COMPUTER PRINTOUT

Project Name:
CIP ID #:
IFB #:

Bid Item #	***Bid Item Description***	***Unit***	***Qty***	***Unit Bid Price***	***Total Amount***
				Total Bid:	

(YOUR FIRM'S NAME) certifies that the unit prices shown on this completed computer printout for all of the bid items and the alternates contained in this proposal are the unit prices intended and that its Bid will be tabulated using these unit prices and no other information from this printout. (YOUR FIRM'S NAME) acknowledges and agrees that the total bid amount shown will be read as its total bid. *In the event of a mathematical error*, the correct product, determined by using the "Unit Price" and "Quantity", and the correct sum, determined by totaling the correct line item Amounts, will prevail over the amount entered by the Bidder.

Signed: _____

Title: _____

Date: _____

End

General Conditions Table of Contents

ARTICLE 1 - DEFINITIONS 3
ARTICLE 2 - PRELIMINARY MATTERS 6
ARTICLE 3 - CONTRACT DOCUMENTS: INTENT, AMENDING, REUSE 9
ARTICLE 4 - AVAILABILITY OF LANDS; SUBSURFACE AND PHYSICAL CONDITIONS; REFERENCE POINTS 10
ARTICLE 5 - BONDS AND INSURANCE 13
ARTICLE 6 - CONTRACTOR'S RESPONSIBILITIES 15
ARTICLE 7 - OTHER WORK 27
ARTICLE 8 - OWNER'S RESPONSIBILITIES 27
ARTICLE 9 - ENGINEER/ARCHITECT'S STATUS DURING CONSTRUCTION 28
ARTICLE 10 - CHANGES IN THE WORK 30
ARTICLE 11 - CHANGE OF CONTRACT AMOUNT 32
ARTICLE 12 - CHANGE OF CONTRACT TIMES 34
ARTICLE 13 - TESTS AND INSPECTIONS; CORRECTION, REMOVAL OR ACCEPTANCE OF DEFECTIVE WORK 37
ARTICLE 14 - PAYMENTS TO CONTRACTOR AND COMPLETION 40
ARTICLE 15 - SUSPENSION OF WORK AND TERMINATION 45
ARTICLE 16 - DISPUTE RESOLUTION 48
ARTICLE 17 - MISCELLANEOUS 50

ARTICLE 1 – DEFINITIONS

Whenever used in these General Conditions or in the other Contract Documents the following terms have the meanings indicated which are applicable to both the singular and plural thereof:

1.1 Addendum - Written instruments issued by the Contract Awarding Authority which clarify, correct or change the bidding requirements or the Contract Documents prior to the Due Date. "Addenda" is the plural form of Addendum.

1.2 Agreement - Prescribed form, Section 00500.

1.3 Alternative Dispute Resolution - The process by which a disputed Claim may be settled if the OWNER and the CONTRACTOR cannot reach an agreement between themselves, as an alternative to litigation.

1.4 Bid - A complete, properly signed response to an Invitation for Bid that, if accepted, would bind the Bidder to perform the resultant Contract.

1.5 Bidder - A person, firm, or entity that submits a Bid in response to a Solicitation. Any Bidder may be represented by an agent after submitting evidence demonstrating the agent's authority. The agent cannot certify as to his own agency status.

1.6 Bid Documents - The advertisement or Invitation for Bids, instructions to Bidders, the Bid form, the Contract Documents and Addenda.

1.7 Calendar Day - Any day of the week; no days being excepted. Work on Saturdays, Sundays, and/or Legal Holidays shall be coordinated with OWNER.

1.8 Change Directive - A written directive to CONTRACTOR, signed by OWNER, ordering a change in the Work and stating a proposed basis for adjustment, if any, in the Contract Amount or Contract Time, or both. A Change Directive may be used in the absence of total agreement on the terms of a Change Order. A Change Directive does not change the Contract Amount or Contract Time, but is evidence that the parties expect that the change directed or documented by a Change Directive will be incorporated in a subsequently issued Change Order.

1.9 Change Orders - Written agreements entered into between CONTRACTOR and OWNER authorizing an addition, deletion, or revision to the Contract, issued on or after the Execution Date of the Agreement.

1.10 Claim - A written demand seeking, as a matter of right, adjustment or interpretation of Contract terms, payment of money, extension of time or other relief with respect to the terms of the Contract.

1.11 Contract - The binding legal agreement between the OWNER and the CONTRACTOR. The Contract represents the entire and integrated agreement between OWNER and CONTRACTOR for performance of the Work, as evidenced by the Contract Documents.

1.12 Contract Amount - The moneys payable by OWNER to CONTRACTOR for completion of the Work in accordance with the Contract Documents.

1.13 Contract Awarding Authority - A City department authorized to enter into Contracts on behalf of the City.

1.14 Contract Documents - Project Manual, Drawings, Addenda and Change Orders.

1.15 Contract Time - The number of days allowed for completion of the Work as defined by the Contract. When any period is referred to in days, it will be computed to exclude the first and include the last day of such period. A day of twenty-four hours measured from midnight to the next midnight will constitute a day.

1.16 CONTRACTOR - The individual, firm, corporation, or other business entity with whom OWNER has entered into the Contract for performance of the Work.

1.17 Critical Path - The longest series of tasks that runs consecutively from the beginning to the end of the project, as determined by duration and workflow sequence. This longest path sets the managerial standard for how quickly a project can be completed, given appropriate resources.

1.18 Drawings - Those portions of the Contract Documents which are graphic representations of the scope, extent and character of the Work to be furnished and performed by CONTRACTOR and which have been approved by OWNER. Drawings may include plans, elevations, sections, details, schedules and diagrams. Shop Drawings are not Drawings as so defined.

1.19 Due Date - The date and time specified for receipt of Bids.

1.20 Engineer/Architect (E/A) - The OWNER's design professional identified as such in the Contract. The titles of "Architect/Engineer," "Architect" and "Engineer" used in the Contract Documents shall read the same as Engineer/Architect (E/A). Nothing contained in the Contract Documents shall create any contractual or agency relationship between E/A and CONTRACTOR.

1.21 Equal - The terms "equal" or "approved equal" shall have the same meaning.

1.22 Execution Date - Date of last signature of the parties to the Agreement.

1.23 Field Order - A written order issued by Owner's Representative which orders minor changes in the Work and which does not involve a change in the Contract Amount or the Contract Time.

1.24 Final Completion - The point in time when OWNER determines that all Work has been completed and final payment to CONTRACTOR will be made in accordance with the Contract Documents.

1.25 Force Account - a basis of payment for the direct performance of Work with payment based on the actual cost of the labor, equipment and materials furnished and consideration for overhead and profit as set forth in Section 11.5.

1.26 Inspector - The authorized representative of any regulatory agency that has jurisdiction over any portion of the Work.

1.27 Invitation for Bid (IFB) - a Solicitation requesting pricing for a specified Good or Service which has been advertised for Bid in a newspaper and/or the Internet.

1.28 Legal Holidays

1.28.1 The following are recognized by the OWNER:

Holiday	Date Observed
New Year's Day	January 1
Martin Luther King, Jr.'s Birthday	Third Monday in January
President's Day	Third Monday in February
Memorial Day	Last Monday in May
Independence Day	July 4
Labor Day	First Monday in September
Veteran's Day	November 11
Thanksgiving Day	Fourth Thursday in November
Friday after Thanksgiving	Friday after Thanksgiving
Christmas Eve	December 24
Christmas Day	December 25

1.28.2 If a Legal Holiday falls on Saturday, it will be observed on the preceding Friday. If a Legal Holiday falls on Sunday, it will be observed on the following Monday.

1.28.3 Christmas Eve is observed only if it falls on a Monday through Thursday. If Christmas Eve falls on a Friday, that day is observed as the Christmas Day holiday.

1.29 Milestones - A significant event specified in the Contract Documents relating to an intermediate completion date or time prior to Substantial Completion of all the Work.

1.30 Notice to Proceed - A Written Notice given by OWNER to CONTRACTOR fixing the date on which the Contract Times will commence to run and on which CONTRACTOR shall start to perform CONTRACTOR's obligations under the Contract Documents.

1.31 OWNER - City of Austin, Texas, a municipal corporation, home rule city and political subdivision organized and existing under the laws of the State of Texas, acting through the City Manager or his/her designee, officers, agents or employees to administer design and construction of the Project.

1.32 Owner's Representative - The designated representative of the OWNER. The Owner's Representative will be identified at the pre-construction conference.

1.33 Partial Occupancy or Use - Use by OWNER of a substantially completed part of the Work for the purpose for which it is intended (or a related purpose) prior to Substantial Completion of all the Work, provided OWNER and CONTRACTOR have accepted in writing the responsibilities assigned to each of them for payments, retainage if any, security, maintenance, utilities, corrective work, insurance and warranties.

1.34 Project - The subject of the Work and its intended result.

1.35 Project Manual - That portion of the Contract Documents which may include the following: introductory information; bidding requirements, Contract forms and General and Supplemental General Conditions; General Requirements; Specifications; Drawings; MBE/WBE or DBE Procurement Program Package; Project Safety Manual; and Addenda.

1.36 Resident Project Representative - The authorized representative of E/A who may be assigned to the site or any part thereof.

1.37 Shop Drawings - All drawings, diagrams, illustrations, schedules and other data or information which are specifically prepared or assembled by or for CONTRACTOR and submitted by CONTRACTOR as required by the Contract Documents.

1.38 Specifications - Those portions of the Contract Documents consisting of written technical descriptions as applied to the Work, which set forth to CONTRACTOR, in detail, the requirements which must be met by all materials, equipment, construction systems, standards, workmanship, equipment and services in order to render a completed and useful project.

1.39 Solicitation - Solicitation means, as applicable, an Invitation for Bid or a Request for Proposal.

1.40 Substantial Completion - The stage in the progress of the Work when the Work, or designated portion thereof, is sufficiently complete in accordance with the Contract Documents so OWNER can occupy or utilize the Work for its intended use, as evidenced by a Certificate of Substantial Completion approved by OWNER.

1.41 Subcontractor - An individual, firm, corporation, or other business entity having a direct contract with CONTRACTOR for the performance of a portion of the Work under the Contract.

1.42 Sub-Subcontractor - A person or entity who has a direct or indirect contract with a Subcontractor to perform a portion of the work.

1.43 Superintendent - The representative of CONTRACTOR authorized in writing to receive and fulfill instructions from the Owner's Representative, and who shall supervise and direct construction of the Work.

1.44 Supplemental General Conditions - The part of the Contract Documents which amends or supplements the General Conditions. All General Conditions which are not so amended or supplemented remain in full force and effect.

1.45 Supplier - An individual or entity having a direct contract with CONTRACTOR or with any Subcontractor to furnish materials or equipment to be incorporated in the Work by CONTRACTOR or any Subcontractor.

1.46 Time Extension Request - An approved request for time extension on a form acceptable to OWNER.

1.47 Work - The entire completed construction, or the various separately identifiable parts thereof, required to be furnished under the Contract Documents.

1.48 Working Day - Any day of the week, not including Saturdays, Sundays, or Legal Holidays in which conditions under the CONTRACTOR's control will permit work for a continuous period of not less than seven (7) hours between 7:00 a.m. and 6:00 p.m. Upon agreement with Owner's Representative, work on Saturdays, Sundays and/or Legal Holidays may be allowed and will be considered a Working Day.

1.49 Working Hours

1.49.1 Working Day Contract: All Work shall be done between 7:00 a.m. and 6:00 p.m. unless authorized by Owner's Representative. However, emergency work may be done without prior permission as indicated in paragraph 6.11.5. If night Work is authorized and conditions under CONTRACTOR's control will permit Work for a continuous period of not less than seven (7) hours between 12:00 a.m. and 11:59 p.m. it will be considered a Working Day. Night Work may be revoked at any time by OWNER if CONTRACTOR fails to maintain adequate equipment and supervision for the prosecution and control of the night Work.

1.49.2 Calendar Day Contract: All Work shall be done between 7:00 a.m. and 6:00 p.m. unless authorized by Owner's Representative. However, emergency work may be done without prior permission as indicated in paragraph 6.11.5. Night Work may be revoked at any time by OWNER if CONTRACTOR fails to maintain adequate equipment and supervision for the prosecution and control of the night Work.

1.50 Written Notice - Written communication between OWNER and CONTRACTOR. Written Notice shall be deemed to have been duly served if delivered in person to Owner's Representative or CONTRACTOR's duly authorized representative, or if delivered at or sent by registered or certified mail to the attention of Owner's Representative or CONTRACTOR's duly authorized representative at the last business address known to the party giving notice.

ARTICLE 2 - PRELIMINARY MATTERS

2.1 Delivery of Agreement, Bonds, Insurance, etc.: Within five (5) Working Days after written notification of award of Contract, CONTRACTOR shall deliver to OWNER signed Agreement, Bond(s), Insurance Certificate(s) and other documentation required for execution of Contract.

2.2 Copies of Documents: OWNER shall furnish to CONTRACTOR one (1) Project Manual with original signatures, one (1) copy of the executed Project Manual, one (1) set of Drawings

and one (1) copy of the Contract Documents in .pdf format. Additional copies will be furnished, upon request, at the cost specified in the Supplemental General Conditions."

2.3 Commencement of Contract Times; Notice to Proceed: The Contract Time(s) will begin to run on the day indicated in the Notice to Proceed. Notice to Proceed will be given at any time within sixty (60) calendar days after the Execution Date of the Agreement, unless extended by written agreement of the parties.

2.4 Before Starting Construction:

2.4.1 No Work shall be done at the site prior to the preconstruction conference without OWNER's approval. Before undertaking each part of the Work, CONTRACTOR shall carefully study the Contract Documents to check and verify pertinent figures shown thereon compare accurately to all applicable field measurements. CONTRACTOR shall promptly report in writing to Owner's Representative any conflict, error, ambiguity or discrepancy which CONTRACTOR may discover and shall obtain a written interpretation or clarification from Owner's Representative before proceeding with any Work affected thereby. CONTRACTOR shall be liable to OWNER for failure to report any conflict, error, ambiguity or discrepancy in the Contract Documents of which CONTRACTOR knew or reasonably should have known.

2.4.2 It is mutually agreed between CONTRACTOR and OWNER that successful completion of the Work within the Contract completion date is of primary importance. Therefore, the CONTRACTOR hereby agrees to submit to the Owner's Representative for review and approval, or acceptance, as appropriate, all information requested within this section, including a Baseline Schedule, no later than five working days prior to the preconstruction conference. The Owner's Representative will schedule the preconstruction conference upon the timely submittal of the required documents, unless time is extended by written mutual agreement. CONTRACTOR will submit the following:

.1 A proposed Baseline Schedule developed using Microsoft Project software, unless otherwise approved by Owner's Representative ("Baseline Schedule") to confirm that all Work will be completed within the Contract time. The Baseline Schedule must (i) indicate the times (number of days or dates) for starting and completing the various stages of the Work, including any Milestones specified in the Contract Documents, (ii) identify the Critical Path for completing the Work, (iii) identify when all Subcontractors will be utilized, and (iv) take into consideration any limitations on Working Hours, including baseline Rain Days on Calendar Day Contracts, and (v) be prepared accordance with Section 01310, Schedules and Reports, if applicable; otherwise in accordance with Section 01300, Submittals. This Baseline Schedule, a copy of which shall be made available at the job site(s), must contain sufficient detail to indicate that the CONTRACTOR has properly identified required Work elements and tasks, has provided for a sufficient and proper workforce and integration of Subcontractors, has provided sufficient resources and has considered the proper sequencing of the Work required to result in a successful Project that can be completed within the Contract time;

.2 An organizational chart showing the principals and management personnel who will be involved with the Work, including each one's responsibilities for the Work;

.3 To the extent not set forth in the Section 00400 Statement of Contractor's Experience, a complete listing of the CONTRACTOR's employees proposed for the Work. List each one by name and job title, and show length of employment with CONTRACTOR;

.4 To the extent not set forth in the Section 00410 Statement of Bidder's Safety Experience, a discussion and confirmation of the CONTRACTOR's commitment to safety by providing a copy of its employee's safety handbook and the safety records for the past three years of CONTRACTOR's proposed project manager and Superintendent;

.5 A preliminary schedule of Shop Drawing and sample submittals;

.6 A preliminary schedule of values for all of the Work, subdivided into component parts in sufficient detail to serve as the basis for progress payments during construction. Such prices will be deemed to include an appropriate amount of overhead and profit applicable to each item of Work;

.7 To the extent not set forth in the Section 00400 Statement of Contractor's Experience, a letter designating CONTRACTOR's Superintendent and project manager, and a confirmation of past project experience for the CONTRACTOR's Superintendent and project manager specifically intended for the Work;

.8 A letter from CONTRACTOR and Subcontractor(s) listing salaried specialists. A salaried specialist is anyone except an hourly worker whose wage rate is governed by Section 00830 of this agreement;

.9 A letter designating the "Competent Person(s)" on general safety and excavation safety measures along with certifications or other documentation of the safety representative's qualifications;

.10 If applicable, an excavation safety system plan;

.11 If applicable, a plan illustrating proposed locations of temporary facilities;

.12 A completed Non-Use of Asbestos Affidavit (Prior to Construction);

.13 A letter designating the Texas Registered Professional Land Surveyor for layout of the Work, if the Work requires the services of a surveyor; and

.14 Appropriate safety training certificates for workers that will initially be on site;

.15 A certificate of worker's compensation insurance coverage for all persons providing services on the Project (refer to 5.2.1.3 in Section 00700 for definition of persons providing services on the Project);

.16 A Construction Equipment Emissions Reduction Plan.

2.4.3 Neither the acceptance nor the approval of any of the submittals required in paragraph 2.4.2, above, will constitute the adoption, affirmation, or direction of the CONTRACTOR'S means and methods.

2.5 **Preconstruction Conference:** Prior to commencement of Work at the site, CONTRACTOR must attend a preconstruction conference with Owner's Representative and others, as set forth in Division 1. Additionally, prior to commencement of work, the CONTRACTOR shall host a preconstruction conference for the Subcontractors identified on the originally approved compliance plan, Owner's Representative and others, as set forth in Division 1. The CONTRACTOR shall notify all Subcontractors five (5) working days prior to the preconstruction conference. If the CONTRACTOR has included Subcontractors in the initial preconstruction conference, the additional Subcontractor preconstruction conference will not be required.

2.6 **Initially Acceptable Schedules:** Unless otherwise provided in the Contract Documents, CONTRACTOR shall obtain approval of Owner's Representative on the Baseline Schedule submitted in accordance with paragraph 2.4.2.1 and Division 1 before the first progress payment will be made to CONTRACTOR. The Baseline Schedule must provide for an orderly

progression of the designated portion of the Work to completion within any specified Milestones and Contract Times. Acceptance of the schedule by Owner's Representative will neither impose on Owner's Representative responsibility or liability for the sequencing, scheduling or progress of the Work nor interfere with or relieve CONTRACTOR from CONTRACTOR's full responsibility for such Work. CONTRACTOR's schedule of Shop Drawings and sample submissions must provide an acceptable basis for reviewing and processing the required submittals. CONTRACTOR's schedule of values must conform to the requirements set forth in Division 1.

ARTICLE 3 - CONTRACT DOCUMENTS: INTENT, AMENDING, REUSE

3.1 Intent:

3.1.1 The intent of the Contract Documents is to include all information necessary for the proper execution and timely completion of the Work by CONTRACTOR. The CONTRACTOR will execute the Work described in and reasonably inferable from the Contract Documents as necessary to produce the results indicated by the Contract Documents. The Contract Documents are complementary, and what is required by one shall be as binding as if required by all. In cases of disagreement, the following order of precedence shall generally govern (top item receiving priority of interpretation):

Signed Agreement
Addendum to the Contract Documents, including approved changes
Supplemental General Conditions
General Conditions
Other Bidding Requirements and Contract Forms
Special Provisions to the Standard Technical Specifications
Special Specifications
Standard Technical Specifications
Drawings (figured dimensions shall govern over scaled dimensions)
Project Safety Manual (if applicable),

with the understanding that a common sense approach will be utilized as necessary so that the Contract Documents produce the intended response.

3.1.2 Unless otherwise stated in the Contract Documents, words that have well-known technical or construction industry meanings are used in the Contract Documents in accordance with such recognized meanings.

3.2 Reporting and Resolving Discrepancies: If, during the performance of the Work, CONTRACTOR discovers any conflict, error, ambiguity or discrepancy within the Contract Documents or between the Contract Documents and any provisions of any such law or regulation applicable to the performance of the Work or of any such standard, specification, manual or code or instructions of any Supplier, CONTRACTOR shall report it to Owner's Representative in writing at once, and CONTRACTOR shall not proceed with the Work affected thereby until an amendment or supplement to the Contract Documents has been issued by one of the methods indicated in paragraph 3.3.1 or 3.3.2. CONTRACTOR shall be liable to OWNER for failure to report any such conflict, error, ambiguity or discrepancy of which CONTRACTOR knew or reasonably should have known.

3.3 Amending and Supplementing Contract Documents:

3.3.1 The Contract Documents may be amended to provide for additions, deletions and revisions in the Work or to modify the terms and conditions thereof in one or more of the following ways:

.1 Change Order.

.2 Change Directive.

.3 Time Extension Request.

3.3.2 In addition, the requirements of the Contract Documents may be supplemented, and minor variations and deviations in the Work may be authorized, in one or more of the following ways:

.1 Field Order.

.2 Review of a Shop Drawing or sample.

.3 Written interpretation or clarification.

3.4 Reuse of Documents Prohibited: CONTRACTOR and any Subcontractor or Supplier or other person or organization performing or furnishing any of the Work under a direct or indirect contract with OWNER: (i) shall not have or acquire any title to or ownership rights in any of the Drawings, Specifications or other documents (or copies of any thereof) prepared by or bearing the seal of E/A or E/A's consultant, and (ii) shall not reuse any of such Drawings, Specifications, other documents or copies on extensions of the Project or any other project without written consent of OWNER and E/A.

3.5 In the event of the breach by the OWNER or CONTRACTOR of any of its obligations under the Contract, so as to support a claim by the other party, the provisions of this Contract will be equitably construed to allow the resolution of such a claim and all of the other provisions of this Contract shall continue in full force and effect as to the rights, responsibilities, and remedies of the OWNER and CONTRACTOR.

ARTICLE 4 - AVAILABILITY OF LANDS; SUBSURFACE AND PHYSICAL CONDITIONS; REFERENCE POINTS

4.1 **Availability of Lands:** The OWNER will provide access to all land and interests in land required for the Work and will notify CONTRACTOR of any restrictions in such access. CONTRACTOR may make a claim if OWNER fails to provide timely access to the Work. CONTRACTOR must obtain any additional temporary construction facilities, stockpiling or storage sites not otherwise provided.

4.2 **Subsurface and Physical Conditions:**

4.2.1 CONTRACTOR specifically represents that it has carefully examined the plans, the geotechnical report, if any, and the site of the proposed Work and is thoroughly familiar with all of the conditions surrounding construction of the Project, having had the opportunity to conduct any and all additional inquiry, tests and investigation that he/she deems necessary and proper. CONTRACTOR acknowledges the receipt of the geotechnical report, if any, and agrees that the report, while it is an accurate record of the geotechnical conditions at the boring locations, is not a guarantee of specific site conditions which may vary between boring locations.

4.2.2 CONTRACTOR must notify OWNER in writing as soon as reasonably possible, but no later than three (3) calendar days, if unforeseen conditions are encountered at the site which are (i) subsurface or otherwise concealed physical conditions that differ materially from those indicated in the Contract Documents or (ii) unknown physical conditions of an unusual nature, that differ materially from those normally encountered in the type of work being performed under this Contract. CONTRACTOR may not disturb the conditions until OWNER conducts an investigation. Owner's Representative and E/A will promptly investigate such

conditions with E/A. If it is determined that such conditions differ materially and cause an increase or decrease in the CONTRACTOR's cost of or time required for performance of any part of the Work, Owner's Representative will recommend an equitable adjustment in the Contract Amount or Contract Time, or both. If it is determined that such conditions are not materially different from those indicated in the Contract Documents, Owner's Representative will notify CONTRACTOR in writing of such findings and the Contract will not be adjusted. CONTRACTOR may dispute such a determination in accordance with Article 16.

4.2.3 Notwithstanding any other provision of this Contract, CONTRACTOR is solely responsible for the location and protection of any and all public utility lines and utility customer service lines in the Work area. "Public utility lines" means the utility distribution and supply system, and "utility customer service lines" means the utility lines connecting customers to the utility distribution and collection system. Generally, existing utility customer service line connections are not shown on the Drawings. CONTRACTOR shall notify "One Call" and exercise due care to locate, mark, uncover and otherwise protect all such lines in the construction zone and any of CONTRACTOR's work or storage areas. CONTRACTOR's responsibility for the location and protection of utilities is primary and nondelegable. CONTRACTOR shall indemnify or reimburse such expenses or costs (including fines that may be levied against OWNER) that may result from unauthorized or accidental damage to all public lines and utility customer service lines in the work area. OWNER reserves the right to repair any damage CONTRACTOR causes to such utilities at CONTRACTOR's expense. If a public line and/or customer service line is damaged by CONTRACTOR, CONTRACTOR shall give verbal notice within one (1) hour and written notice within twenty-four (24) hours to the Owner's Representative.

4.2.4 CONTRACTOR shall take reasonable precaution to avoid disturbing primitive records and antiquities of archaeological, paleontological or historical significance. No objects of this nature shall be disturbed without written permission of OWNER and Texas Historical Commission. When such objects are uncovered unexpectedly, CONTRACTOR shall stop all Work in close proximity and notify Owner's Representative and Texas Historical Commission of their presence and shall not disturb them until written permission and permit to do so is granted. All primitive rights and antiquities uncovered on OWNER's property shall remain property of State of Texas, Texas Historical Commission conforming to Texas Natural Resources Code. If it is determined by OWNER, in consultation with Texas Historical Commission, that exploration or excavation of primitive records or antiquities on Project site is necessary to avoid loss, CONTRACTOR shall cooperate in salvage work attendant to preservation. If the Work stoppage or salvage work causes an increase in CONTRACTOR's cost of, or time required for, performance of the Work, the Contract Amount and/or Contract Time will be equitably adjusted.

4.3 Reference Points: Unless otherwise specified, all control lines and bench marks suitable for use in layout will be furnished by OWNER. Lay out of the Work shall be performed in accordance with Division 1. Controls, bench marks and property boundary markers shall be carefully preserved by CONTRACTOR by use of flags, staffs or other visible devices and in case of destruction or removal by CONTRACTOR or its employees, such controls and bench marks shall be replaced by a Registered Professional Land Surveyor at CONTRACTOR's expense. City of Austin survey monuments damaged by CONTRACTOR will be reestablished by OWNER at CONTRACTOR's expense.

4.4 Hazardous Materials:

4.4.1 To the extent provided by applicable law, OWNER shall be responsible for any hazardous material uncovered or revealed at the site which was not shown,

indicated or identified in the Contract Documents to be within the scope of the Work and which may present a substantial danger to persons or property exposed thereto in connection with the Work at the site. CONTRACTOR shall immediately notify Owner's Representative of any suspected hazardous materials encountered before or during performance of the Work and shall take all necessary precautions to avoid further disturbance of the materials.

4.4.2 CONTRACTOR shall be responsible for any hazardous materials brought to the site by CONTRACTOR, Subcontractor, Suppliers or anyone else for whom CONTRACTOR is responsible.

4.4.3 No asbestos-containing materials shall be incorporated into the Work or brought on Project site without prior approval of OWNER. The CONTRACTOR shall not knowingly use, specify, request or approve for use any asbestos containing materials or lead-based paint without the OWNER'S written approval. When a specific product is specified, the CONTRACTOR shall endeavor to verify that the product does not include asbestos containing material.

4.4.4 Refer to Division 1 for hazardous material definitions and procedures.

.1 Unless otherwise expressly provided in the Contract Documents to be part of the Work, CONTRACTOR is not responsible for any unexpected Hazardous Materials encountered at the site. Upon encountering any Hazardous Conditions, CONTRACTOR must stop Work immediately in the affected area and duly notify OWNER and, if required by applicable law or regulations, all government or quasi-government entities with jurisdiction over the Project or site.

.2 Upon receiving notice of the presence of suspected Hazardous Materials, OWNER shall take the necessary measures required to ensure that the Hazardous Materials are remediated or rendered harmless. Such necessary measures shall include OWNER retaining qualified independent experts to (i) ascertain whether Hazardous Materials have actually been encountered, and, if they have been encountered, (ii) prescribe the remedial measures that OWNER must take either to remove the Hazardous Materials or render the Hazardous Materials harmless.

.3 CONTRACTOR shall be obligated to resume Work at the affected area of the Project only after OWNER's Representative provides written certification that (i) the Hazardous Materials have been removed or rendered harmless and (ii) all necessary approvals have been obtained from all government and quasi-government entities having jurisdiction over the Project or site. The CONTRACTOR shall be responsible for continuing the Work in the unaffected portion of the Project and site.

.4 CONTRACTOR will be entitled, in accordance with these General Conditions, to an adjustment in its Contract Amount and/or Contract Time(s) to the extent CONTRACTOR's cost and/or time of performance have been adversely impacted by the presence of Hazardous Materials.

.5 Notwithstanding the preceding provisions of this Section 4.1, OWNER is not responsible for Hazardous Materials introduced to the Site by CONTRACTOR, Subcontractors or anyone for whose acts they may be liable. CONTRACTOR shall indemnify, defend and hold harmless OWNER and OWNER's officers, directors, employees and agents from and against all claims, losses, damages, liabilities and expenses, including attorneys' fees and expenses, arising out of or resulting from those hazardous materials introduced to the site by CONTRACTOR, Subcontractors or anyone for whose acts they may be liable.

4.4.5 CONTRACTOR shall be responsible for use, storage and remediation of any hazardous materials brought to the Site by CONTRACTOR, Subcontractors, Suppliers or anyone else for whom CONTRACTOR is responsible.

ARTICLE 5 - BONDS AND INSURANCE

5.1 Surety and Insurance Companies: All bonds and insurance required by the Contract Documents shall be obtained from solvent surety or insurance companies that are duly licensed by the State of Texas and authorized to issue bonds or insurance policies for the limits and coverages required by the Contract Documents. The bonds shall be in a form acceptable to OWNER and shall be issued by a surety which complies with the requirements of Texas Insurance Code, Title 12, Chapter 3503. The surety must obtain reinsurance for any portion of the risk that exceeds 10% of the surety's capital and surplus. For bonds exceeding $100,000, the surety must also hold a certificate of authority from the U.S. Secretary of the Treasury or have obtained reinsurance for any liability in excess of $1,000,000 from a reinsurer that is authorized as a reinsurer in Texas or holds a certificate of authority from the U.S. Secretary of the Treasury. In the event that the proposed surety for a contract award in excess of $100,000 does not hold a certificate of authority from the U.S. Secretary of the Treasury and/or its proposed reinsurer does not hold a certificate of authority from the U.S. Secretary of the Treasury, the OWNER may require additional financial solvency information from the Bidder/Contractor and the proposed surety company and/or reinsurer as part of the 00400 Statement of Bidders Experience and determination of bidder responsibility in the award of the Contract.

5.2 Workers' Compensation Insurance Coverage:

5.2.1 Definitions:

.1 Certificate of coverage ("certificate") - A copy of a certificate of insurance, a certificate of authority to self-insure issued by the commission, or a coverage agreement (DWC-81, DCW-82, DCW-83, or DCW84), showing statutory workers' compensation insurance coverage for the person's or entity's employees providing services on the Project, for the duration of the Project.

.2 Duration of the Project - includes the time from the beginning of the Work on the Project until the CONTRACTOR's/ person's Work on the Project has been completed and accepted by OWNER.

.3 Persons providing services on the Project ("subcontractor" in Texas Labor Code, Section 406.096) - includes all persons or entities performing all or part of the services the CONTRACTOR has undertaken to perform on the Project, regardless of whether that person contracted directly with the CONTRACTOR and regardless of whether that person has employees. This includes, without limitation, independent contractors, Subcontractors, leasing companies, motor carriers, owner-operators, employees of any such entity, or employees of any entity which furnishes persons to provide services on the Project. "Services" include, without limitation, providing, hauling, or delivering equipment or materials, or providing labor, transportation, or other service related to a project. "Services" does not include activities unrelated to the Project, such as food/beverage vendors, office supply deliveries, and delivery of portable toilets.

5.2.2 CONTRACTOR shall provide coverage, based on proper reporting of classification codes and payroll amounts and filing of any coverage agreements, which meets the statutory requirements of Texas Labor Code, Section 401.011(44) for all

employees of the CONTRACTOR providing services on the Project, for the duration of the Project.

5.2.3 CONTRACTOR must provide a certificate of coverage to OWNER prior to being awarded the Contract.

5.2.4 If the coverage period shown on the CONTRACTOR's current certificate of coverage ends during the duration of the Project, the CONTRACTOR must, prior to the end of the coverage period, file a new certificate of coverage with OWNER showing that coverage has been extended.

5.2.5 CONTRACTOR shall obtain from each person providing services on the Project, and provide to OWNER:

.1 A certificate of coverage, prior to that person beginning Work on the Project, so OWNER will have on file certificates of coverage showing coverage for all persons providing services on the Project; and

.2 No later than seven (7) days after receipt by CONTRACTOR, a new certificate of coverage showing extension of coverage, if the coverage period shown on the current certificate of coverage ends during the duration of the Project.

5.2.6 CONTRACTOR shall retain all required certificates of coverage for the duration of the Project and for one (1) year thereafter.

5.2.7 CONTRACTOR shall notify OWNER in writing by certified mail or personal delivery, within ten (10) days after CONTRACTOR knew or should have known, of any change that materially affects the provision of coverage of any person providing services on the Project.

5.2.8 CONTRACTOR shall post on each Project site a notice, in the text, form and manner prescribed by the Texas Workers' Compensation Commission, informing all persons providing services on the Project that they are required to be covered, and stating how a person may verify coverage and report lack of coverage.

5.2.9 CONTRACTOR shall contractually require each person with whom it contracts to provide services on a Project, to:

.1 Provide coverage, based on proper reporting of classification codes and payroll amounts and filing of any coverage agreements, which meets the statutory requirements of Texas Labor Code, Section 401.011(44) for all of its employees providing services on the Project, for the duration of the Project;

.2 Provide to CONTRACTOR, prior to that person beginning Work on the Project, a certificate of coverage showing that coverage is being provided for all employees of the person providing services on the Project, for the duration of the Project;

.3 Provide CONTRACTOR, prior to the end of the coverage period, a new certificate of coverage showing extension of coverage, if the coverage period shown on the current certificate of coverage ends during the duration of the Project;

.4 Obtain from each other person with whom it contracts, and provide to CONTRACTOR: a) a certificate of coverage, prior to the other person beginning Work on the Project; and b) a new certificate of coverage showing extension of coverage, prior to the end of the coverage period, if the coverage period shown on the current certificate of coverage ends during the duration of the Project;

.5 Retain all required certificates of coverage on file for the duration of the Project and for one (1) year thereafter;

.6 Notify OWNER in writing by certified mail or personal delivery, within ten (10) days after the person knew or should have known, of any change that materially affects the provision of coverage of any person providing services on the Project; and

.7 Contractually require each person with whom it contracts, to perform as required by paragraphs 5.2.9.1 - 5.2.9.7, with the certificates of coverage to be provided to the person for whom they are providing services.

5.2.10 By signing this Contract or providing or causing to be provided a certificate of coverage, CONTRACTOR is representing to OWNER that all employees of the CONTRACTOR who will provide services on the Project will be covered by workers' compensation coverage for the duration of the Project, that the coverage will be based on proper reporting of classification codes and payroll amounts, and that all coverage agreements will be filed with the appropriate insurance carrier or, in the case of a self-insured, with the Texas Worker's Compensation Commission's Division of Self- Insurance Regulation. Providing false or misleading information may subject CONTRACTOR to administrative penalties, criminal penalties, civil penalties, or other civil actions.

5.2.11 CONTRACTOR's failure to comply with any of these provisions is a breach of Contract by CONTRACTOR which entitles OWNER to declare the Contract void if CONTRACTOR does not remedy the breach within ten (10) days after receipt of notice of breach from OWNER.

5.3 Other Bond and Insurance Requirements: For additional insurance requirements, refer to the Supplemental General Conditions.

5.4 Bonds:

5.4.1 General.

.1 Bonds, when required, shall be executed on forms furnished by or acceptable to OWNER. All bonds signed by an agent must be accompanied by a certified copy of such agent's authority to act.

.2 If the surety on any bond furnished by CONTRACTOR is declared bankrupt or becomes insolvent or its right to do business is terminated in the State of Texas or it ceases to meet the requirements of the preceding paragraph, CONTRACTOR shall within ten (10) days thereafter substitute another bond and surety, both of which must be acceptable to OWNER.

.3 When Performance Bonds and/or Payment Bonds are required, each shall be issued in an amount of one hundred percent (100%) of the Contract Amount as security for the faithful performance and/or payment of all CONTRACTOR's obligations under the Contract Documents. Performance Bonds and Payment Bonds shall be issued by a solvent surety company authorized to do business in the State of Texas, and shall meet any other requirements established by law or by OWNER pursuant to applicable law. Any surety duly authorized to do business in Texas may write Performance and Payment Bonds on a project without reinsurance to the limit of ten percent (10%) of its capital and surplus. Such a surety must reinsure any obligations over ten percent (10%).

5.4.2 Performance Bond.

.1 If the Contract Amount exceeds $100,000, CONTRACTOR shall furnish OWNER with a Performance Bond in the form set out in Section 00610.

.2 If the Contract Amount exceeds $25,000 but is less than or equal to $100,000, CONTRACTOR shall furnish OWNER with a Performance Bond in the form set out in Section 00610, unless the original Contract Time is 60 Calendar

Days/40 Working Days or less, in which case CONTRACTOR can agree to the following terms and conditions for payment in lieu of providing a Performance Bond: no moneys will be paid to CONTRACTOR until completion and acceptance of the Work by OWNER; CONTRACTOR shall be entitled to receive 95% of the Contract Amount following Final Completion, and the remaining 5% of the Contract Amount following the one (1) year warranty period.

.3 If the Contract Amount is less than or equal to $25,000, CONTRACTOR will not be required to furnish a Performance Bond; provided that no moneys will be paid to CONTRACTOR until completion and acceptance of the Work by OWNER under the following terms and conditions: CONTRACTOR shall be entitled to receive 95% of the Contract Amount following Final Completion, and the remaining 5% of the Contract Amount following the one (1) year warranty period.

.4 If a Performance Bond is required to be furnished, it shall extend for the one (1) year warranty period.

5.4.3 Payment Bond.

.1 If the Contract Amount exceeds $50,000, CONTRACTOR shall furnish OWNER with a Payment Bond in the form set out in Section 00620.

.2 If the Contract Amount is less than or equal to $50,000, CONTRACTOR will not be required to furnish a Payment Bond; provided that no moneys will be paid to CONTRACTOR until completion and acceptance of the Work by OWNER under the terms and conditions specified in paragraph 5.4.2.3.

5.4.4 **Maintenance Bond:** If the Contract Documents contemplate a period of maintenance beyond the one (1) year contractual warranty period, OWNER agrees that any bond to be required for such maintenance work will be in the amount of the maintenance work during any extended maintenance period.

ARTICLE 6 - CONTRACTOR'S RESPONSIBILITIES

6.1 Supervision and Superintendence:

6.1.1 CONTRACTOR shall supervise, inspect and direct the Work competently and efficiently, devoting such attention thereto and applying such skills and expertise as may be necessary to perform the Work in accordance with the Contract Documents. CONTRACTOR shall be solely responsible for the means, methods, techniques, sequences and procedures of construction. CONTRACTOR shall be responsible to see that the completed Work complies accurately with the Contract Documents.

6.1.2 CONTRACTOR shall have an English-speaking, competent Superintendent on the Work at all times that work is in progress. The Superintendent will be CONTRACTOR's representative on the Work and shall have the authority to act on the behalf of CONTRACTOR. All communications given to the Superintendent shall be as binding as if given to CONTRACTOR. Either CONTRACTOR or the Superintendent shall provide a cellular telephone number and an emergency and home telephone number at which one or the other may be reached if necessary when work is not in progress. The Superintendent must be an employee of the CONTRACTOR, unless such requirement is waived in writing by the Owner's Representative. If the CONTRACTOR proposes a management structure with a Project Manager supervising, directing, and managing construction of the work in addition to or in substitution of a Superintendent, the requirements of these Construction Documents with respect to the Superintendent shall likewise apply to any such Project Manager.

.1 CONTRACTOR shall present the resume of the proposed Superintendent to the Owner's Representative showing evidence of experience and successful superintendence and direction of work of a similar scale and complexity. If, in the opinion of the Owner's Representative, the proposed Superintendent does not indicate sufficient experience in line with the Work, he/she will not be allowed to be the designated Superintendent for the Work.

.2 The Superintendent shall not be replaced without Written Notice to Owner's Representative. If CONTRACTOR deems it necessary to replace the Superintendent, CONTRACTOR shall provide the necessary information for approval, as stated above, on the proposed new Superintendent.

.3 A qualified substitute Superintendent may be designated in the event that the designated Superintendent is temporarily away from the Work, but not to exceed a time limit acceptable to the Owner's Representative. CONTRACTOR shall replace the Superintendent upon OWNER's request in the event the Superintendent is unable to perform to OWNER's satisfaction.

6.2 Labor, Materials and Equipment:

6.2.1 CONTRACTOR shall maintain a work force adequate to accomplish the Work within the Contract Time. CONTRACTOR agrees to employ only orderly and competent workers, skillful in performance of the type of Work required under this Contract. CONTRACTOR, Subcontractors, Sub-subcontractors, and their employees may not use or possess any alcoholic or other intoxicating beverages, illegal drugs or controlled substances while on the job or on OWNER's property, nor may such workers be intoxicated, or under the influence of alcohol or drugs, on the job. Subject to the applicable provisions of Texas law, CONTRACTOR, Subcontractors, Sub-subcontractors, and their employees may not use or possess any firearms or other weapons while on the job or on OWNER'S property. If OWNER or Owner's Representative notifies CONTRACTOR that any worker or representative of Contractor is incompetent, disorderly, abusive, or disobedient, has knowingly or repeatedly violated safety regulations, has possessed any firearms in contravention of the applicable provisions of Texas law, or has possessed or was under the influence of alcohol or drugs on the job, CONTRACTOR shall immediately remove such worker or representative, including an officer or owner of CONTRACTOR, from performing Contract Work, and may not employ such worker or representative again on Contract Work without OWNER's prior written consent. CONTRACTOR shall at all times maintain good discipline and order on or off the site in all matters pertaining to the Project. Workers on Project shall be paid not less than wage rates, including fringe benefits, as published by the Department of Labor (DOL) for Building Construction and Heavy and Highway Trades "AS APPLICABLE" and/or the $13.50 minimum wage required by City of Austin Ordinance No. 20160324-015, whichever is higher. The Total Minimum Wage required can be met using any combination of cash and non-cash qualified fringe benefits provided the cash component meets or exceeds the $13.50 minimum wage required.

6.2.2 Unless otherwise specified in Division 1, CONTRACTOR shall provide and pay for all materials, equipment, labor, transportation, construction equipment and machinery, tools, appliances, fuel, power, light, heat, telephone, water, sanitary facilities, temporary facilities and all other facilities and incidentals necessary for the furnishing, performance, testing, start-up and completion of the Work.

6.2.3 All materials and equipment shall be of good quality and new (including new products made of recycled materials, pursuant to Section 361.426 of the Texas Health & Safety Code), except as otherwise provided in the Contract Documents. If required by Owner's Representative, CONTRACTOR shall furnish satisfactory evidence (reports of required tests, manufacturer's certificates of compliance with

material requirements, mill reports, etc.) as to the kind and quality of materials and equipment. All materials and equipment shall be applied, installed, connected, erected, used, cleaned and conditioned in accordance with instructions of the applicable Supplier, except as otherwise provided in the Contract Documents.

6.2.4 Substitutes and "Approved Equal" Items:

.1 Whenever an item of material or equipment is specified or described in the Contract Documents by using the name of a proprietary item or the name of a particular Supplier, the specification or description is intended to establish the type, function and quality required. Unless the specification or description contains words reading that no like, equivalent or "approved equal" item or no substitution is permitted, other items of material or equipment of other Suppliers may be submitted by CONTRACTOR, at CONTRACTOR'S sole risk, including disruptions to the Critical Path of the Progress Schedule, to E/A through Owner's Representative under the following circumstances:

.1.1 "Approved Equal": If in E/A's sole discretion an item of material or equipment proposed by CONTRACTOR is functionally equal to that named and sufficiently similar so that no change in related Work will be required, it may be considered by E/A as an "approved equal" item, in which case review of the proposed item may, in E/A's sole discretion, be accomplished without compliance with some or all of the requirements for evaluation of proposed substitute items. CONTRACTOR shall provide E/A with the documentation required for E/A to make its determination.

.1.2 Substitute Items: If in E/A's sole discretion an item of material or equipment proposed by CONTRACTOR does not qualify as an "approved equal" item under subparagraph 6.2.4.1.1, it will be considered a proposed substitute item. CONTRACTOR shall submit sufficient information as provided in Division 1 to allow E/A to determine that the item of material or equipment proposed is essentially equivalent to that named and a substitute therefor.

.2 Substitute Construction Methods and Procedures: If a specific means, method, technique, sequence or procedure of construction is shown or indicated in and expressly required by the Contract Documents, CONTRACTOR may, at CONTRACTOR'S sole risk, including disruptions to the Critical Path of the Progress Schedule, with prior approval of E/A furnish or utilize a substitute means, method, technique, sequence, or procedure of construction. CONTRACTOR shall submit sufficient information to Owner's Representative to allow E/A, in E/A's sole discretion, to determine that the substitute proposed is equivalent to that expressly called for by the Contract Documents. The procedure for review by E/A will be same as that provided for substitute items in Division 1.

.3 E/A's Evaluation: E/A will be allowed a reasonable time within which to evaluate each proposal or submittal made pursuant to subparagraphs 6.2.4.1.1 and 6.2.4.1.2. E/A will be the sole judge of acceptability. No "approved equal" or substitute shall be ordered, installed, or utilized until E/A's review is complete, which will be evidenced by either a Change Order or completion of the Shop Drawing review procedure. OWNER may require CONTRACTOR to furnish at CONTRACTOR's expense a special performance guarantee or other surety bond with respect to any "approved equal" or substitute or for any other delay or disruption to the Critical Path of the Project Schedule attributable to any such substitution. OWNER shall not be responsible for any delay due to review time for any "approved equal" or substitute.

.4 CONTRACTOR's Expense: All data and documentation to be provided by CONTRACTOR in support of any proposed "approved equal" or substitute item will be at CONTRACTOR's expense.

.5 The approval of the E/A will not relieve the CONTRACTOR from primary responsibility and liability for the suitability and performance of any proposed substitute item, method or procedure and will not relieve CONTRACTOR from its primary responsibility and liability for curing defective Work and performing warranty work, which the CONTRACTOR shall cure and perform, regardless of any claim the CONTRACTOR may choose to advance against the E/A or manufacturer.

6.2.5 CONTRACTOR agrees to assign to OWNER any rights it may have to bring antitrust suits against its Suppliers for overcharges on materials incorporated in the Project growing out of illegal price fixing agreements. CONTRACTOR further agrees to cooperate with OWNER should OWNER wish to prosecute suits against Suppliers for illegal price fixing.

6.3 Progress Schedule: Unless otherwise provided in Division 1, CONTRACTOR shall adhere to the Baseline Schedule established in accordance with paragraph 2.6 as it may be adjusted from time to time as provided below:

6.3.1 CONTRACTOR shall submit to Owner's Representative for review and approval any proposed adjustments in the Progress Schedule that will not change the Contract Times or Milestones on a monthly basis. Any such proposed adjustments must be substantiated with documentation of any changes to the underlying logic of the Progress Schedule. CONTRACTOR's Progress Schedule must show how the CONTRACTOR will consistently advance the progress of the Work in accordance with the Critical Path of the Work and the Contract Time or Milestones. Such adjustments will conform generally to the Progress Schedule then in effect and additionally will comply with any provisions of Division 1 applicable thereto.

6.3.2 Proposed adjustments in the Progress Schedule that will change the Contract Times or Milestones shall be submitted in accordance with the requirements of Article 12. Any such proposed adjustments must be substantiated with documentation of any changes to the underlying logic of the Progress Schedule. Such adjustments may only be made by a Change Order or Time Extension Request in accordance with Article 12.

6.4 Concerning Subcontractors, Suppliers and Others:

6.4.1 Assignment: CONTRACTOR agrees to retain direct control of and give direct attention to the fulfillment of this Contract. CONTRACTOR agrees not to, by Power of Attorney, or otherwise, assign said Contract without the prior written consent of OWNER. In addition, without OWNER'S written consent, the CONTRACTOR will not subcontract the performance of the entire Work or the supervision and direction of the Work.

6.4.2 Award of Subcontracts for Portions of the Work: CONTRACTOR shall not employ any Subcontractor, Supplier or other person or organization, whether initially or as a substitute, against whom OWNER may have reasonable objection. OWNER will communicate such objections by Written Notice. If OWNER requires a change without good cause of any Subcontractor, person or organization previously accepted by OWNER, the Contract Amount shall be increased or decreased by the difference in the cost occasioned by any such change, and appropriate Change Order shall be issued. CONTRACTOR shall not substitute any Subcontractor, person or organization that has been accepted by OWNER, unless the substitute has been accepted in writing by OWNER. No acceptance by OWNER of any Subcontractor,

Supplier or other person or organization shall constitute a waiver of any right of OWNER to reject defective Work.

6.4.3 CONTRACTOR shall enter into written agreements with all Subcontractors and Suppliers which specifically binds the Subcontractors or Suppliers to the applicable terms and conditions of the Contract Documents for the benefit of OWNER and E/A. The OWNER reserves the right to specify that certain requirements shall be adhered to by all Subcontractors and Sub-subcontractors as indicated in other portions of the Contract Documents and these requirements shall be made a part of the agreement between CONTRACTOR and Subcontractor or Supplier. Subject to and in accordance with the above requirements, the CONTRACTOR must provide and will be deemed for all purposes to have provided in its contracts with major Subcontractors or Suppliers on the Project (those contracts of more than $10,000) the following specific provision: alternative dispute resolution (paragraphs 16.2 and 16.3), which shall be mandatory in the event of a subcontractor or supplier claim and a prerequisite for the submission of any derivative claim. The CONTRACTOR's standard subcontract form is subject to the OWNER's review and approval. The OWNER may request and the CONTRACTOR will provide within five (5) working days a copy of any subcontract requested by the OWNER.

6.4.4 CONTRACTOR shall be fully responsible to OWNER for all acts and omissions of the Subcontractors, Suppliers and other persons and organizations performing or furnishing any of the Work under a direct or indirect contract with CONTRACTOR just as CONTRACTOR is responsible for CONTRACTOR's own acts and omissions. Nothing in the Contract Documents shall create for the benefit of any such Subcontractor, Supplier or other person or organization any contractual relationship between OWNER and any such Subcontractor, Supplier or other person or organization, nor shall it create any obligation on the part of OWNER or E/A to pay or to see to the payment of any moneys due any such Subcontractor, Supplier or other person or organization except as may otherwise be required by laws and regulations.

6.4.5 CONTRACTOR shall be solely responsible for efficiently scheduling and coordinating the Work of Subcontractors, Suppliers and other persons and organizations performing or furnishing any of the Work under a direct or indirect contract with CONTRACTOR in order to avoid any delays or inefficiencies in the prosecution of the Work. CONTRACTOR shall require all Subcontractors, Suppliers and such other persons and organizations performing or furnishing any of the Work to communicate with Owner's Representative through CONTRACTOR.

6.4.6 The divisions and sections of the Specifications and the identifications of any Drawings shall not control CONTRACTOR in dividing or delineating the Work to be performed by any specific trade.

6.4.7 CONTRACTOR shall pay each Subcontractor and Supplier their appropriate share of payments made to CONTRACTOR not later than ten (10) Calendar Days of CONTRACTOR's receipt of payment from OWNER. Upon request from Owner, the CONTRACTOR has two (2) Working Days to provide documentation verifying Payment to Subcontractor(s). The CONTRACTOR is required to notify the Subcontractor(s) in writing of rejection of Application for Payment within two (2) Working Days following notification by Owner. Failure of CONTRACTOR to make payments to Subcontractors or for labor, materials or equipment in accordance to this contract, may be cause to reject future Bids by the CONTRACTOR in accordance with Section 00100 9.B.4 and may be cause to reject payment in accordance with 00700 14.4.1.3.

6.4.8 To the extent allowed by Texas law, the OWNER shall be deemed to be a third party beneficiary to each subcontract and may, if OWNER elects, following a termination of the CONTRACTOR, require that the Subcontractor(s) perform all or a portion of

unperformed duties and obligations under its subcontract(s) for the benefit of the OWNER, rather than the CONTRACTOR; however, if the OWNER requires any such performance by a Subcontractor for the OWNER's direct benefit, then the OWNER shall be bound and obligated to pay such Subcontractor the reasonable value for all Work performed by such Subcontractor to the date of the termination of the CONTRACTOR, less previous payments, and for all Work performed thereafter. In the event that the OWNER elects to invoke its right under this section, OWNER will provide notice of such election to the CONTRACTOR and the affected Subcontractor(s).

6.5 Patent Fees and Royalties:

6.5.1 CONTRACTOR shall be responsible at all times for compliance with applicable patents or copyrights encompassing, in whole or in part, any design, device, material, or process utilized, directly or indirectly, in the performance of the Work or the formulation or presentation of its Bid.

6.5.2 CONTRACTOR shall pay all royalties and license fees and shall provide, prior to commencement of Work hereunder and at all times during the performance of same, for lawful use of any design, device, material or process covered by letters, patent or copyright by suitable legal agreement with the patentee, copyright holder, or their duly authorized representative whether or not a particular design, device, material, or process is specified by OWNER.

6.5.3 CONTRACTOR shall defend all suits or claims for infringement of any patent or copyright and shall save OWNER harmless from any loss or liability, direct or indirect, arising with respect to CONTRACTOR's process in the formulation of its Bid or the performance of the Work or otherwise arising in connection therewith. OWNER reserves the right to provide its own defense to any suit or claim of infringement of any patent or copyright in which event CONTRACTOR shall indemnify and save harmless OWNER from all costs and expenses of such defense as well as satisfaction of all judgments entered against OWNER.

6.5.4 OWNER shall have the right to stop the Work and/or terminate this Agreement at any time in the event CONTRACTOR fails to disclose to OWNER that CONTRACTOR's work methodology includes the use of any infringing design, device, material or process.

6.6 Permits, Fees: Unless otherwise provided in the Supplemental General Conditions, CONTRACTOR shall obtain and pay for all construction permits, licenses and fees required for prosecution of the Work.

6.7 Laws and Regulations:

6.7.1 CONTRACTOR shall give all notices and comply with all laws and regulations applicable to furnishing and performing the Work, including arranging for and obtaining any required inspections, tests, approvals or certifications from any public body having jurisdiction over the Work or any part thereof. Except where otherwise expressly required by applicable laws and regulations, neither OWNER nor E/A shall be responsible for monitoring CONTRACTOR's compliance with any laws and regulations.

6.7.2 Maintaining clean water, air and earth or improving thereon shall be regarded as of prime importance. CONTRACTOR shall plan and execute its operations in compliance with all applicable Federal, State and local laws and regulations concerning control and abatement of water pollution and prevention and control of air pollution.

6.7.3 If CONTRACTOR performs any Work knowing or having reason to know that it is contrary to laws or regulations, CONTRACTOR shall bear all claims, costs, losses and damages arising therefrom; however, it shall not be CONTRACTOR's primary

responsibility to make certain that the Specifications and Drawings are in accordance with laws and regulations, but this does not relieve CONTRACTOR of CONTRACTOR's obligations under Article 3.

6.8 Taxes:

6.8.1 CONTRACTOR shall pay only those sales, consumer, use and other similar taxes required to be paid by CONTRACTOR in accordance with the laws and regulations of the State of Texas in the performance of this public works contract.

6.8.2 OWNER is an exempt organization as defined by Chapter 11 of the Property Tax Code of Texas and is thereby exempt from payment of Sales Tax under Chapter 151, Limited Use Sales, Excise and Use Tax, Texas Tax Code, and Article 1066 (C), Local Sales and Use Tax Act, Revised Civil Statutes of Texas.

6.9 Use of Premises:

6.9.1 CONTRACTOR shall confine construction equipment, the storage of materials and equipment and the operations of workers to the site and land and areas identified in and permitted by the Contract Documents and other land and areas permitted by laws and regulations, right-of-way, permits and easements, and shall not unreasonably encumber the premises with construction equipment or other materials or equipment. CONTRACTOR shall assume full responsibility for any damage to any such land or area, or to the owner or occupant thereof or of any adjacent land or areas, resulting from the performance of the Work. Should any claim be made by any such owner or occupant because of or in connection with the performance of the Work, CONTRACTOR shall promptly settle with such other party by negotiation or otherwise resolve the claim by arbitration or other dispute resolution proceeding or at law. CONTRACTOR shall indemnify, defend and hold harmless OWNER, E/A, E/A'S Consultants and anyone directly or indirectly employed by any of them from and against all claims, costs, losses and damages (including court costs and reasonable attorney's fees) arising out of or resulting from any claim or action, legal or equitable, brought by any such owner or occupant against OWNER, E/A or any other party indemnified hereunder to the extent caused by or based upon performance of the work or failure to perform the Work.

6.9.2 During the progress of the Work and on a daily basis, CONTRACTOR shall keep the premises free from accumulations of waste materials, rubbish and other debris resulting from the Work. At the completion of the Work, CONTRACTOR shall remove all waste materials, rubbish and debris from and about the premises as well as all tools, appliances, construction equipment and machinery and surplus materials. CONTRACTOR shall leave the site clean and ready for occupancy by OWNER at Substantial Completion of the Work. CONTRACTOR shall, at a minimum, restore to original condition all property not designated for alteration by the Contact Documents. If the CONTRACTOR fails to clean up at the completion of the Work, OWNER may do so and the cost thereof will be charged against the CONTRACTOR.

6.9.3 CONTRACTOR shall not load nor permit any part of any structure to be loaded in any manner that will endanger the structure, nor shall CONTRACTOR subject any part of the Work or adjacent property to stresses or pressures that will endanger it.

6.10 Record Documents: CONTRACTOR shall maintain in a safe place at the site, or other location acceptable to OWNER, one (1) record copy of all Drawings, Specifications, Addenda, Change Orders, Change Directives, Field Orders and written interpretations and clarifications (issued pursuant to paragraph 9.5) in good order and annotated to show all changes made during construction. These record documents together with all final samples and all final Shop Drawings will be available to OWNER and E/A for reference during performance of the Work. Upon Substantial Completion of the Work, these record documents, samples and Shop Drawings shall be promptly delivered to Owner's Representative.

6.11 Safety and Protection:

6.11.1 CONTRACTOR shall be responsible for initiating, maintaining and supervising all safety precautions and programs in connection with the Work. Upon request, and prior to installation of measures, CONTRACTOR shall submit a site security plan for approval by OWNER. By reviewing the plan or making recommendations or comments, OWNER will not assume liability nor will CONTRACTOR be relieved of liability for damage, injury or loss. CONTRACTOR shall take all necessary precautions for the safety of and shall provide the necessary protection to prevent damage, injury or loss to:

.1 all persons on the Work site or who may be affected by the Work;

.2 all the Work and materials and equipment to be incorporated therein, whether in storage on or off the site; and

.3 other property at the site or adjacent thereto, including, but not limited to, trees, shrubs, lawns, walks, pavements, roadways, structures, utilities and underground facilities not designated for removal, relocation or replacement in the course of construction.

6.11.2 CONTRACTOR shall comply with all applicable laws and regulations of any public body having jurisdiction for safety of persons or property or to protect them from damage, injury or loss; and shall erect and maintain all necessary safeguards for such safety and protection. CONTRACTOR shall notify owners of adjacent property and of underground facilities, and utility owners when prosecution of the Work may affect them, and shall cooperate with them in the protection, removal, relocation and replacement of their property. All damage, injury or loss to any property referred to in paragraph 6.11.1.2 and 6.11.1.3 caused, directly or indirectly, in whole or in part, by CONTRACTOR, Subcontractor, Supplier or any person or organization directly or indirectly employed by any of them to perform or furnish any of the Work or anyone for whose acts any of them may be liable, shall be remedied by CONTRACTOR (except damage or loss attributable to the fault of Drawings or Specifications or to the acts or omissions of OWNER, or E/A, or E/A's consultant or anyone employed by any of them or anyone for whose acts any of them may be liable, and not attributable, directly or indirectly, in whole or in part, to the faults or negligence of CONTRACTOR or any Subcontractor, Supplier or other person or organization directly or indirectly employed by any of them). CONTRACTOR's duties and responsibilities for safety and protection of the Work shall continue until such time as all the Work is completed and Owner's Representative has issued a notice to OWNER and CONTRACTOR in accordance with Article 14 that the Work is acceptable (except as otherwise expressly provided in connection with Substantial Completion). Without limitation, CONTRACTOR shall comply with the following specific provisions:

It shall be the duty and responsibility of CONTRACTOR and all of its subcontractors to be familiar with and comply with 29 USC Section 651, et seq., the Occupational Safety and Health Act of 1970, as amended (“OSHA”) and to enforce and comply with all provisions of this Act.

The CONTRACTOR and all of its subcontractors shall comply with all applicable requirements of Subpart P of Part 1926 of 29 C.F.R, OSHA Safety and Health Standards, Texas Health and Safety Code Section 756.023, as amended, and shall submit a unit price for the particular excavation safety systems to be utilized by the Contractor for all excavations which exceed a depth of five feet (5’).

Before commencing any excavation which will exceed a depth of five feet (5’), the CONTRACTOR shall provide the Owner with detailed plans and specifications regarding the safety systems to be utilized. Said plans and specifications shall

include a certification from a Texas licensed professional engineer indicating full compliance with the OSHA provisions cited above.

6.11.3 Safety Representative: CONTRACTOR shall designate in writing a qualified and experienced safety representative (the "Safety Representative") at the site whose duties and responsibilities shall include safety training; identifying and mitigating hazardous conditions and unsafe work practices; and developing, maintaining and supervising the implementation of safe work practices and safety programs as deemed necessary and appropriate for the Project. The term "Safety Representative" includes any designated Safety Supervisor, Superintendent or Safety Manager. The Safety Representative shall exercise due diligence in the execution of all Project related safety duties. The Safety Representative shall report directly to a company executive, not an on site project manager. Upon request of OWNER, CONTRACTOR shall provide certifications or other acceptable documentation of the Safety Representative's qualifications. The following requirements will be effective as of September 1, 2010:

.1 The Safety Representative shall present certification of completion of the OSHA 30-hour Construction Industry Training Outreach Program described at: http://www.osha.gov/dte/outreach/construction_generalindustry/construction.html

.2 The Safety Representative shall verify that all construction workers (defined as persons covered by a prevailing wage determination) on the job site, whether employed by the CONTRACTOR or subcontractors, have completed the OSHA 10-hour Construction Industry Training Outreach Program described at: http://www.osha.gov/dte/outreach/construction_generalindustry/construction.html. The Safety Representative must receive a certificate of training completion before allowing a worker on site and shall have all such certificates available for inspection by the OWNER.

.3 The Safety Representative shall ensure that workers, including designated competent persons, have completed all applicable OSHA specific or other training needed to perform their job assignments. Training topics applicable to the scope of the current Project may include, but are not limited to, scaffolds, fall protection, cranes, excavations, electrical safety, tools, concrete and masonry construction, steel erection, operation of motor vehicles and mechanized equipment.

.4 The Safety Representative shall post notice on the site of the Work stating that all workers shall have completed OSHA Construction Industry Training. The Owner may require, and the Safety Representative should consider providing a means of readily identifying workers who have completed the required training to monitor compliance with these requirements.

.5 The Safety Representative shall ensure that all required OSHA and Workers Compensation notices to workers are posted in English and Spanish at one or more conspicuous locations on the work site.

6.11.4 Hazard Communication Programs: CONTRACTOR shall be responsible for coordinating any exchange of material safety data sheets or other hazard communication information required to be made available to or exchanged between or among employers at the site in accordance with laws and regulations.

6.11.5 Emergencies:

.1 In emergencies affecting the safety or protection of persons or the Work at the site or adjacent thereto, CONTRACTOR, without special instruction or authorization from OWNER or E/A, is obligated to act reasonably to prevent threatened damage, injury or loss and to mitigate damage or loss to the Work.

CONTRACTOR shall give Owner's Representative telephone notification as soon as reasonably practical and a prompt written notice if CONTRACTOR believes that any significant changes in the Work or variations from the Contract Documents have been caused thereby. If Owner's Representative determines that a change in the Contract Documents is required because of the action taken by CONTRACTOR in response to such an emergency, a Change Directive or Change Order will be issued to document the consequences of such action; otherwise OWNER will not be responsible for CONTRACTOR's emergency action.

.2 Authorized agents of CONTRACTOR shall respond immediately to call-out at any time of any day or night when circumstances warrant the presence on Project site of CONTRACTOR or his agent to protect the Work or adjacent property from damage, restriction or limitation or to take such action or measures pertaining to the Work as may be necessary to provide for the safety of the public. Should CONTRACTOR and/or their agent fail to respond and take action to alleviate such an emergency situation, OWNER may direct other forces to take action as necessary to remedy the emergency condition, and OWNER will deduct any cost of such remedial action from the funds due CONTRACTOR under this Contract.

.3 In the event there is an accident involving injury to any individual or damage to any property on or near the Work, CONTRACTOR shall provide to Owner's Representative verbal notification within one (1) hour and written notification within twenty-four (24) hours of the event and shall be responsible for recording the location of the event and the circumstances surrounding the event through photographs, interviewing witnesses, obtaining medical reports, police accident reports and other documentation that describes the event. Copies of such documentation shall be provided to Owner's Representative, for OWNER's and E/A's records, within forty-eight (48) hours of the event. Contractor shall cooperate with OWNER on any OWNER investigation of any such incident.

6.11.6 Rest Breaks:

.1 Except as provided in subsection 6.11.6.2 below, an employee performing construction activity at a construction site is entitled to a rest break of not less than ten (10) minutes for every four (4) hours worked. No employee may be required to work more than 3.5 hours without a rest break. A rest break means a break from work within working hours, excluding meal breaks, during which an employee may not work. A rest break shall be scheduled as near as possible to the midpoint of the work period.

.2 An employee is not entitled to a rest break under subsection 6.11.6.1 on any day the employee works less than 3.5 hours or spends more than half of his or her work time engaged in non-strenuous labor in a climate controlled environment.

.3 A sign describing the requirements of this Section 6.11.6 in English and Spanish shall be posted by the employer in each establishment subject to the requirement of a rest break in a conspicuous place or places where notices to employees are customarily posted, in accordance with the OWNER's then current rules for size, content, and location of such signage.

.4 The violation of Ordinance No. 20100729-047, enacted July 29, 2010, which establishes the rest break requirements set forth above, may be enforced with criminal penalties and civil remedies, as set forth in the Ordinance.

6.11.7 If the Contractor fails to carry out the Work in accordance with the Contract Documents so that a safety violation has occurred, the Owner may order the Contractor to stop the Work or any portion thereof, until the cause for such order has been eliminated. However, the right of the Owner to stop the Work under this paragraph shall not give rise to a duty on the part of the Owner to supervise the Contractor's Work or to control the Contractor's means and methods or to exercise this right for the benefit of the Contractor or any other person or entity. All time lost due to Project shut down will be the Contractor's sole responsibility, will be charged against the Contract Time, and the Contractor will be responsible for any and all expenses incurred. This provision is in addition to and supplemental to the applicable provisions of the Project's ROCIP Safety Manual.

6.11.8 Confined Space Program

.1 Contractor acknowledges and agrees that the Owner is temporarily transferring management and control of the site of the Work to the Contractor for the purpose of constructing the Project. The Contractor's responsibilities to manage the Work includes the responsibility to manage the property for purposes of compliance with 29 CFR 1926 subpart AA. To the best of Owner's knowledge and belief, Owner has provided the following information in the plans and specifications and other Contract Documents: (i) the location of each known permit space, (ii) the hazards or potential hazards in each space or the reason it is a permit space; and (iii) any precautions that the Owner or any previous contractor has implemented for the protection of employees in the permit space. This transfer will result in the Contractor being both the host employer and the controlling contractor for this portion of the Work.

6.12 Continuing the Work: CONTRACTOR shall carry on the Work and adhere to the Progress Schedule during all disputes or disagreements with OWNER. No Work shall be delayed or postponed pending resolution of any disputes or disagreements, except as OWNER and CONTRACTOR may otherwise agree in writing.

6.13 CONTRACTOR's General Warranty and Guarantee:

6.13.1 CONTRACTOR warrants and guarantees to OWNER that all Work will conform to the plans and specifications, be performed in a good and workmanlike manner in accordance with the Contract Documents and will not be defective. This warranty will survive the termination or expiration of the Contract. CONTRACTOR's warranty and guarantee hereunder excludes defects or damage caused by:

.1 abuse, modification or improper maintenance or operation by persons other than CONTRACTOR, Subcontractors or Suppliers; or

.2 normal wear and tear under normal usage.

6.13.2 CONTRACTOR's obligation to perform and complete the Work in a good and workmanlike manner in accordance with the Contract Documents shall be absolute. None of the following will constitute an acceptance of Work that is not in accordance with the Contract Documents or a release of CONTRACTOR's obligation to perform the Work in accordance with the Contract Documents:

.1 observations by Owner's Representative and/or E/A;

.2 recommendation of any progress or final payment by Owner's Representative;

.3 the issuance of a certificate of Substantial Completion or any payment by OWNER to CONTRACTOR under the Contract Documents;

.4 use or occupancy of the Work or any part thereof by OWNER;

.5 any acceptance by OWNER or any failure to do so;

.6 any review of a Shop Drawing or sample submittal;

.7 any inspection, test or approval by others; or

.8 any correction of defective Work by OWNER.

6.14 INDEMNIFICATION:

6.14.1 CONTRACTOR shall defend, indemnify and hold harmless OWNER, E/A, E/A'S Consultants and Sub consultants and their respective officers, directors, partners, employees, agents and other Consultants and any of them (the "INDEMNIFIED PARTIES") from and against all claims, costs, losses and damages (including but not limited to all fees and charges of engineers, architects, attorneys and other professionals and all court or arbitration or other dispute resolution costs) arising out of or resulting from the performance of the Work, provided that any such claim, cost, loss or damage:

.1 Is attributable to bodily injury, sickness, disease or death, or to injury to or destruction of tangible property (other than the work itself), including the loss of use resulting therefrom, and

.2 Is caused in whole or in part by any negligent act or omission of CONTRACTOR, any Subcontractor, any Supplier, any person or organization directly or indirectly employed by any of them to perform or furnish any of the work or anyone for whose acts any of them may be liable, regardless of whether or not caused in part by any negligence or omission of the INDEMNIFIED PARTIES hereunder or whether liability is imposed upon such INDEMNIFIED PARTY by laws and regulations regardless of the negligence of any such person or entity.

In the event that indemnification of the INDEMNIFIED PARTIES is prohibited by law, CONTRACTOR shall nonetheless be solely responsible for any liability arising out of or resulting from the performance of the Work, subject to the limitations set forth above, and shall indemnify and hold harmless the remaining INDEMNIFIED PARTIES, who may be legally indemnified, from such liability of the CONTRACTOR and the associated costs described above.

6.14.2 The indemnification obligation under paragraph 6.14.1 shall not be limited in any way by any limitation on the amount or type of damages, or compensation or benefits payable by or for CONTRACTOR or any such Subcontractor, Supplier or other person or organization under workers' compensation acts, disability benefit acts or other employee benefit acts.

6.14.3 The obligations of CONTRACTOR under paragraph 6.14.1 shall not extend to the liability of OWNER, E/A, E/A's consultants, and their officers, directors, partners, employees or agents caused primarily by negligent preparation of maps, drawings, surveys, designs or specifications upon which is placed the applicable state-authorized design professional seal of OWNER's, E/A's or E/A's consultant's officers, directors, partners, employees or agents.

6.14.4 In the event CONTRACTOR fails to follow OWNER's directives concerning use of the site, scheduling or course of construction, or engages in other conduct which proximately causes damage to property based on inverse condemnation or otherwise, then and in that event, CONTRACTOR shall indemnify OWNER against all costs resulting from such claims.

6.14.5 In the event CONTRACTOR unreasonably delays progress of the work being done by others on the site so as to cause loss for

which OWNER becomes liable, then CONTRACTOR shall indemnify OWNER from and reimburse OWNER for such loss.

6.15 Survival of Obligations: All representations, indemnifications, warranties and guarantees made in, required by or given in accordance with the Contract Documents, as well as all continuing obligations indicated in the Contract Documents, will survive final payment, completion and acceptance of the Work and termination or completion of the Agreement.

6.16 Losses from Natural Causes: Unless otherwise specified, all loss or damage to CONTRACTOR arising out of the nature of the Work to be done or from action of the elements, floods or from unforeseeable circumstances in prosecution of the Work or from unusual obstructions or difficulties which may be encountered in prosecution of the Work, shall be sustained and borne by CONTRACTOR at its own cost and expense.

6.17 Notice of Claim: Should CONTRACTOR suffer injury or damage to person or property because of any error, omission or act of OWNER or of any of OWNER's employees or agents or others for whose acts OWNER is liable, a Claim must be made to the other party within thirty (30) calendar days of the event giving rise to such injury or damage. The provisions of this paragraph 6.17 shall not be construed as a substitute for or a waiver of the provisions of any applicable statute of limitations or statute of repose.

6.18 Liquidated Damages: CONTRACTOR or its Surety shall be liable for liquidated damages for the failure of the CONTRACTOR to timely complete the Work or any portion thereof within the Contract Time.

ARTICLE 7 - OTHER WORK

7.1 OWNER may perform other work related to the Project at the site by OWNER's own forces, or let other contracts therefor, or have other work performed by utility owners. CONTRACTOR and OWNER agree to and shall use best efforts to cooperate and coordinate the Work with others performing work and other work related to the Project in order to avoid conflicts and delays in the Work. If CONTRACTOR believes that delay or additional cost is involved because of such action by OWNER, CONTRACTOR may make a Claim as provided in Article 11 or 12.

7.2 CONTRACTOR shall afford other contractors who are in a contract with OWNER and each utility owner (and OWNER, if OWNER is performing the additional work with OWNER's employees) proper and safe access to the site and a reasonable opportunity for the introduction and storage of materials and equipment and the execution of such other work and shall properly connect and coordinate the Work with theirs. Unless otherwise provided in the Contract Documents, CONTRACTOR shall do all cutting, fitting and patching of the Work that may be required to make its several parts come together properly and integrate with such other work. CONTRACTOR shall not endanger any work of others by cutting, excavating or otherwise altering their work and will only cut or alter their work with the written consent of Owner's Representative and the other contractors whose work will be affected. CONTRACTOR shall promptly remedy damage wrongfully caused by CONTRACTOR to completed or partially completed construction or to property of the OWNER or separate contractors.

7.3 If the proper execution or results of any part of CONTRACTOR's Work depends upon work performed by others under this Article 7, CONTRACTOR shall inspect such other work and promptly report to Owner's Representative in writing any delays, defects or deficiencies in such other work that render it unavailable or unsuitable for the proper execution and results of CONTRACTOR's Work. CONTRACTOR's failure to report will constitute an acceptance of such other work as fit and proper for integration with CONTRACTOR's Work except for latent or non-apparent defects and deficiencies in such other work.

7.4 OWNER shall provide for coordination of the activities of the OWNER's own forces and of each separate contractor with the Work of CONTRACTOR, who shall cooperate with them. CONTRACTOR shall participate with other separate contractors and Owner's Representative in reviewing their construction Progress Schedules when directed to do so. On the basis of such review, CONTRACTOR shall make any revisions to the construction Progress Schedule deemed necessary after a joint review and mutual agreement. The agreed upon construction Progress Schedules shall then constitute the Progress Schedules to be used by CONTRACTOR, separate contractors and OWNER until subsequently revised.

7.5 Costs caused by delays or by improperly timed activities or defective construction shall be borne by the party responsible therefor.

ARTICLE 8 - OWNER'S RESPONSIBILITIES

8.1 Prior to the start of construction, OWNER will designate in writing a person or entity to act as Owner's Representative during construction. Except as otherwise provided in these General Conditions, OWNER shall issue all communications to CONTRACTOR through Owner's Representative.

8.2 OWNER will not supervise, direct, control or have authority over or be responsible for CONTRACTOR's means, methods, techniques, sequences or procedures of construction or the safety precautions and programs incident thereto. OWNER is not responsible for any failure of CONTRACTOR to comply with laws and regulations applicable to furnishing or performing the Work. OWNER is not responsible for CONTRACTOR's failure to perform or furnish the Work in accordance with the Contract Documents. Failure or omission of OWNER to discover, or object to or condemn any defective Work or material shall not release CONTRACTOR from the obligation to properly and fully perform the Contract.

8.3 OWNER is not responsible for the acts or omissions of CONTRACTOR, or of any Subcontractor, any Supplier, or of any other person or organization performing or furnishing any of the Work. CONTRACTOR acknowledges and agrees that OWNER'S direction to perform Work in accordance with the approved Progress Schedule is not a demand for acceleration or a dictation of CONTRACTOR'S means or methods.

8.4 Information or services under the OWNER's control shall be furnished by the OWNER with reasonable promptness to avoid delay in orderly progress of the Work. The OWNER shall have a reasonable amount of time to investigate site conditions, review submittals, analyze requests for changes, and to make other decisions in the orderly administration of the Contract. CONTRACTOR must notify the OWNER in writing, if the time for the investigation, review, analysis of any submittals, required for changes or otherwise required for OWNER'S decision, impacts in any way the Critical Path of the approved Progress Schedule.

8.5 The foregoing are in addition to other duties and responsibilities of the OWNER enumerated herein and especially those in respect to Article 4 (Availability of Lands; Subsurface and Physical Conditions; Reference Points), Article 7 (Other Work) and Article 14 (Payments to CONTRACTOR and Completion).

8.6 **Notice of Claim:** Should OWNER suffer injury or damage to person or property because of any error, omission or act of CONTRACTOR or of any of CONTRACTOR's employees or agents or others for whose acts CONTRACTOR is liable, a Claim will be made to the other party within thirty (30) calendar days of receipt of actual or constructive notice of the event giving rise to such injury or damage. The provisions of this paragraph 8.6 shall not be construed as a substitute for or a waiver of the provisions of any applicable statute of limitations or statute of repose.

ARTICLE 9 - ENGINEER/ARCHITECT'S STATUS DURING CONSTRUCTION

9.1 E/A's Authority and Responsibilities:

9.1.1 The duties and responsibilities and the limitations of authority of E/A during construction, as set forth in the Contract Documents, may be assigned or assumed by the OWNER, but shall not be extended without written consent of OWNER and/or E/A. The assignment of any authority, duties or responsibilities to E/A under the Contract Documents, or under any agreement between OWNER and E/A, or any undertaking, exercise or performance thereof by E/A, is intended to be for the sole and exclusive benefit of OWNER and not for the benefit of CONTRACTOR, Subcontractor, Supplier, or any other person or organization, or for any surety or employee or agent of any of them.

9.1.2 E/A will not supervise, direct, control or have authority over or be responsible for CONTRACTOR's means, methods, techniques, sequences or procedures of construction, or the safety precautions and programs incident thereto. E/A is not responsible for any failure of CONTRACTOR to comply with laws and regulations applicable to the furnishing or performing the Work. E/A is not responsible for CONTRACTOR's failure to perform or furnish the Work in accordance with the Contract Documents. Failure or omission of E/A to discover, or object to or condemn any defective Work or material shall not release CONTRACTOR from the obligation to properly and fully perform the Contract.

9.1.3 E/A is not responsible for the acts or omissions of CONTRACTOR, or of any Subcontractor, any Supplier, or of any other person or organization performing or furnishing any of the Work.

9.1.4 If OWNER and E/A agree, E/A will review the final Application for Payment and accompanying documentation and all maintenance and operating instructions, schedules, guarantees, bonds and certificates of inspection, tests and approvals and other documentation required to be delivered by Article 14, but only to determine generally that their content complies with the requirements of, and in the case of certificates of inspections, tests and approvals that the results certified indicate compliance with, the Contract Documents.

9.1.5 The limitations upon authority and responsibility set forth in this paragraph 9.1 shall also apply to E/A's Consultants, Resident Project Representative and assistants.

9.2 E/A as Owner's Representative: E/A may be designated as the Owner's Representative under paragraph 8.1.

9.3 Visits to Site: If OWNER and E/A agree, E/A will make visits to the site at intervals appropriate to the various stages of construction as E/A deems necessary in order to observe as an experienced and qualified design professional the progress that has been made and the quality of the various aspects of CONTRACTOR's executed Work. Based on information obtained during such visits and observations, E/A will endeavor for the benefit of OWNER to determine, in general, if the Work is proceeding in accordance with the Contract Documents. E/A will not be required to make exhaustive or continuous on-site inspections to check the quality or quantity of the Work. E/A's efforts will be directed toward providing for OWNER a greater degree of confidence that the completed Work will conform generally to the Contract Documents. On the basis of such visits and on-site observations, E/A will keep OWNER informed of the progress of the Work and will endeavor to guard OWNER against defective Work. E/A's visits and on-site observations are subject to all the limitations on E/A's authority and responsibility set forth in paragraph 9.1.

9.4 Resident Project Representative: If OWNER and E/A agree, E/A will furnish a Resident Project Representative to assist E/A in providing more continuous observation of the Work. The responsibilities and authority and limitations of any such Resident Project Representative and assistants will be as provided in paragraph 9.1 and in the Supplemental General Conditions. OWNER may designate another representative or agent to represent OWNER at the site who is not E/A, E/A's consultant, agent or employee.

9.5 Clarifications and Interpretations: E/A may determine that written clarifications or interpretations of the requirements of the Contract Documents (in the form of drawings or otherwise) are necessary. Such written clarifications or interpretations will be consistent with the intent of and reasonably inferable from the Contract Documents, will be issued with reasonable promptness by Owner's Representative and will be binding on OWNER and CONTRACTOR. If OWNER or CONTRACTOR believes that a written clarification or interpretation justifies an adjustment in the Contract Amount or the Contract Times, OWNER or CONTRACTOR may make a Claim therefor as provided in Article 11 or 12.

9.6 Rejecting Defective Work: E/A will recommend that OWNER disapprove or reject Work which E/A believes to be defective, or believes will not produce a completed Project that conforms to the Contract Documents or will prejudice the integrity of the design concept of the completed Project as a functioning whole as indicated by the Contract Documents.

9.7 Shop Drawings: Refer to Division 1 for E/A's authority concerning Shop Drawings.

ARTICLE 10 - CHANGES IN THE WORK

10.1 Changes:

10.1.1 Without invalidating the Contract and without notice to any surety, OWNER may, at any time or from time to time, order additions, deletions or revisions in the Work. Such changes in the Work will be authorized by Change Order, Change Directive or Field Order. In the event that the OWNER and the CONRACTOR are unable to negotiate the terms of a Change Order for the performance of additional Work, the OWNER may, at its election, perform such additional Work with its own forces or with another contractor and such work will be considered "Other Work" in accordance with Article 7.

10.1.2 Changes in the Work shall be performed under applicable provisions of the Contract Documents, and CONTRACTOR shall proceed promptly, unless otherwise provided in the Change Order, Change Directive or Field Order. CONTRACTOR's proposals for changes in the Contract Amount and/or Contract Time shall be submitted within ten (10) Calendar Days of request by Owner's Representative, including impacts to the approved Progress Schedule, unless Owner's Representative grants an extension. OWNER will review each proposal and respond to CONTRACTOR within ten (10) Calendar Days. After review by OWNER, CONTRACTOR shall provide any supporting data requested by Owner's Representative within seven (7) Calendar Days, unless Owner's Representative grants an extension. OWNER will determine within seven (7) Calendar Days whether to pursue the change in Work.

10.1.3 CONTRACTOR shall not be entitled to an increase in the Contract Amount or an extension of the Contract Times with respect to any Work performed that is not required by the Contract Documents as amended, modified and supplemented as provided in paragraphs 3.3.1 and 3.3.2, except in the case of an emergency as provided in paragraph 6.11.5 or in the case of uncovering Work as provided in paragraph 13.4.

10.1.4 Except in the case of an emergency as provided in paragraph 6.11.5, a Change Order or Change Directive is required before CONTRACTOR commences any activities associated with a change in the Work which, in CONTRACTOR 's opinion, will result in a change in the Contract Amount and/or Contract Times.

10.1.5 If notice of any change affecting the general scope of the Work or the provisions of the Contract Documents (including, but not limited to, Contract Amount or Contract Times) is required by the provisions of any Bond to be given to a surety, the giving of any such notice will be CONTRACTOR's responsibility, and the amount of each applicable Bond will be adjusted accordingly.

10.2 Change Orders:

10.2.1 OWNER and CONTRACTOR shall execute appropriate written Change Orders covering:

.1 a change in the Work;

.2 the amount of the adjustment in the Contract Amount, if any; and

.3 the extent of the adjustment in the Contract Time, if any.

10.2.2 An executed Change Order shall represent the complete, equitable, and final amount of adjustment in the Contract Amount and/or Contract Time owed to CONTRACTOR or OWNER as a result of the occurrence or event causing the change in the Work encompassed by the Change Order.

10.3 Change Directives:

10.3.1 Without invalidating the Contract, OWNER may, by written Change Directive, using the Force Account method, order changes in the Work within the general scope of the Contract consisting of additions, deletions or other revisions, the Contract Amount and Contract Time being adjusted as necessary. “Force Account” means a basis of payment for the direct performance of Work with payment based on the actual cost of the labor, equipment and materials furnished and consideration for overhead and profit as set forth in Section 11.5, below. A Change Directive shall be used in the absence of complete and prompt agreement on the terms of a Change Order. Where practicable, any items of Work that may be agreed upon, prior to the performance of Work under this Section, will be included in a separate Change Order. For example, the cost of the installation of additional asphalt may be agreed upon based on the unit prices in the Bid.

10.3.2 If the Change Directive provides for an adjustment to the Contract Amount, the adjustment shall be based on the method provided in paragraph 11.5.

10.3.3 A Change Directive shall be effective immediately and shall be recorded later by preparation and execution of an appropriate Change Order.

10.3.4 Upon receipt of a Change Directive, CONTRACTOR shall promptly proceed with the change in the Work involved, provided, prior to the commencement of any Work under this section, the CONTRACTOR must submit its proposed Work plan, anticipated schedule, and a list of its work force and equipment proposed to be used in the Work for OWNER’S approval. Upon such approval, CONTRACTOR must promptly commence and make continuous progress in the Work. The OWNER reserves the right to withhold payment for low production or lack of progress.

10.4 Field Order:

10.4.1 Owner's Representative may authorize minor variations in the Work from the requirements of the Contract Documents which do not involve an adjustment in the Contract Amount or the Contract Times and are compatible with the design concept of the completed Project as a functioning whole as indicated by the

Contract Documents. These shall be accomplished by written Field Order and shall be binding on OWNER and on CONTRACTOR who shall perform the Work involved promptly.

10.4.2 If CONTRACTOR believes that a Field Order would require an adjustment in the Contract Amount and/or Contract Times, CONTRACTOR shall make a prompt written request to Owner's Representative for a Change Order. Any request by CONTRACTOR for an adjustment in Contract Amount and/or Contract Times must be made in writing prior to beginning the work covered by the Field Order.

10.5 **No Damages for Delay:** CONTRACTOR shall receive no compensation for delays or hindrances to the Work, except when direct and unavoidable extra cost to CONTRACTOR is caused by failure of OWNER to provide information or material, if any, which is to be furnished by OWNER or access to the Work and only to the extent that such acts continue after the CONTRACTOR furnishes OWNER with written notice of such failure. When such extra compensation is claimed a written statement thereof shall be presented by CONTRACTOR to OWNER and if by OWNER found correct shall be approved. If delay is caused by specific orders given by OWNER to stop work or by performance of extra Work or by failure of OWNER to provide material or necessary instructions for carrying on the Work, then such delay will entitle CONTRACTOR to an equivalent extension of time, CONTRACTOR's application for which shall, however, be subject to approval of OWNER. No such extension of time shall release CONTRACTOR or surety on its performance bond from all CONTRACTOR's obligations hereunder which shall remain in full force until discharge of the Contract. In no event shall the CONTRACTOR be entitled to any compensation or recovery of any special damages in connection with any delays, including without limitation: consequential damages, lost opportunity costs, impact damages, or other similar damages. The OWNER'S exercise of any of its rights or remedies under the Contract Documents (including without limitation ordering changes in the Work, or directing suspension, rescheduling, or correction of the Work), regardless of the extent or frequency of the OWNER'S exercise of such rights or remedies, shall not be construed as active interference in the CONTRACTOR'S performance of the Work. Except as otherwise provided herein, an extension of Contract Time, to the extent permitted under Article 12, shall be the sole remedy of the CONTRACTOR for any acknowledged delays.

ARTICLE 11 - CHANGE OF CONTRACT AMOUNT

11.1 The Contract Amount is stated in the Agreement and, including authorized adjustments, is the total amount payable by OWNER to CONTRACTOR for performance of the Work under the Contract Documents.

11.2 The original Contract Amount may not be increased by more than twenty-five percent (25%) and it may not be decreased more than twenty-five percent (25%) without the consent of the CONTRACTOR to such decrease, except in the event of a termination for convenience under paragraph 15.2 or the failure of the City Council to appropriate sufficient funding for the Project, in which events it is agreed that the consent of the CONTRACTOR will not be required.

11.3 The Contract Amount shall only be changed by a Change Order. Any claim for an adjustment in the Contract Amount shall be made by Written Notice delivered by the party making the Claim to the other party promptly (but in no event later than thirty (30) calendar days) after the start of the occurrence or event giving rise to the Claim and stating the general nature of the Claim. Notice of the amount of the Claim with supporting data shall be delivered within thirty (30) calendar days after Written Notice of Claim is delivered by claimant, and shall represent that the adjustment claimed covers all known amounts to which claimant is entitled as a result of said occurrence or event. If OWNER and

CONTRACTOR cannot otherwise agree, all Claims for adjustment in the Contract Amount shall be determined as set out in Article 16.

11.4 Determination of Value of Work:

11.4.1 The value of any Work covered by a Change Order for an adjustment in the Contract Amount will be determined by one or more of the following methods:

.1 by application of unit prices contained in the Contract Documents to the quantities of the items involved.

.2 by a mutually agreed lump sum properly itemized and supported by sufficient substantiating data, including documentation by subcontractors performing the work, to permit evaluation.

.3 by cost of Work plus CONTRACTOR's fee for all overhead costs and profit (determined as provided in paragraph 11.5).

.4 No cost will be included in the change order for time spent preparing the change order, nor will costs be included for an estimate of time to negotiate the change order costs for machinery, tools, or equipment as described in subparagraph 11.5.3

11.4.2 Before using the method described in paragraph 11.4.1.3, OWNER and CONTRACTOR agree to negotiate a Change Order using the methods identified in paragraphs 11.4.1.1 and 11.4.1.2, as appropriate, to determine the adjustment in the Contract Amount.

11.5 Cost of Work: If neither of the methods defined in paragraphs 11.4.1.1 nor 11.4.1.2 can be agreed upon before a change in the Work is commenced which will result in an adjustment in the Contract Amount, then the change in the Work will be performed by Change Directive, using the Force Account method, and payment will be made as follows:

11.5.1 For all personnel, CONTRACTOR will receive actual field cost wage rates for each hour that said personnel are actually engaged in such Work, as substantiated by its certified payroll, to which will be added an amount equal to twenty-five percent (25%) of the sum thereof as compensation for CONTRACTOR's and any effected Subcontractor's total overhead and profit. No separate charge will be made by CONTRACTOR or its Subcontractor(s) for organization or overhead expenses. In no case will the rate of wage be less than the minimum shown in the Contract for a particular category. CONTRACTOR will also receive an amount equal to 55% of the wages paid personnel, excluding the 25% compensation provided above, for CONTRACTOR's and any effected Subcontractor's cost of premiums on public liability insurance, workers' compensation insurance, social security and unemployment insurance. The actual cost of CONTRACTOR's bond(s) on the extra Work will be paid based on invoices from surety. No charge for superintendence will be made unless considered necessary and ordered by OWNER.

11.5.2 CONTRACTOR will receive the actual cost, including freight charges, of the materials used and installed on such Work, to which costs will be added a sum equal to twenty-five percent (25%) thereof as compensation for CONTRACTOR's and any effected Subcontractor's total overhead and profit. In case material invoices indicate a discount may be taken, the actual cost will be the invoice price minus the discount.

11.5.3 For machinery, trucks, power tools, or other similar equipment (the "equipment") agreed to be necessary by OWNER and CONTRACTOR, OWNER will allow CONTRACTOR the Regional and Model Year adjusted Monthly Ownership Cost divided by 176 plus the Hourly Estimated Operating Costs as given in the latest edition of the "Rental Rate Blue Book" as published by EquipmentWatch (1-800-

669-3282) for each hour that said equipment is in use on such work. The established equipment rates will be paid for each hour that the equipment is utilized in the Work. In the event that the equipment is used intermittently during the Work, full payment for an eight-hour day will be made if the equipment is not idle more than four (4) hours of the day. If the equipment is idle more than four (4) hours in a day, then payment will be made only for the actual hours worked. No additional compensation will be allowed on the equipment for CONTRACTOR's or any affected Subcontractor's overhead and profit. OWNER may accept an actual rental invoice in lieu of the method of calculation set forth in paragraph 11.5.3 for equipment rented exclusively for Force Account Work or for equipment not included in the Rental Rate Blue Book.

11.5.4 The compensation, as herein provided for, shall be received by CONTRACTOR and any affected Subcontractor as payment in full for work done by Change Directive and will include use of small tools, and total overhead expense and profit. CONTRACTOR and Owner's Representative shall compare records of work done by Change Directive at the end of each day. Copies of these records will be made upon forms provided for this purpose by OWNER and signed by both Owner's Representative and CONTRACTOR, with one copy being retained by OWNER and one by CONTRACTOR. Refusal by CONTRACTOR to sign these records within two (2) working days of presentation does not invalidate the accuracy of the record.

11.6 Unit Price Work:

11.6.1 Where the Contract Documents provide that all or part of the Work is to be unit price Work, initially the Contract Amount will be deemed to include for all unit price work an amount equal to the sum of the established unit price for each separately identified item of unit price work times the estimated quantity of each item as indicated in the Bid. The estimated quantities of items of unit price work are not guaranteed and are solely for the purpose of comparison of Bids and determining an initial Contract Amount. Determinations of the actual quantities and classifications of unit price work performed by CONTRACTOR will be made by Owner's Representative. Owner's Representative will review with CONTRACTOR the preliminary determinations on such matters before rendering a written decision thereon (by recommendation of an Application for Payment or otherwise).

11.6.2 When "plan quantity" is indicated for a Bid item, CONTRACTOR shall be paid amount specified in the Contract Documents without any measurements.

11.6.3 Each unit price will be deemed to include an amount considered by CONTRACTOR to be adequate to cover CONTRACTOR's overhead and profit for each separately identified item.

11.6.4 A Major Item is any individual Bid item in the Bid that has a total cost equal to or greater than five percent (5%) of the original Contract Amount or $50,000, whichever is greater, computed on the basis of Bid quantities and Contract unit prices.

11.6.5 OWNER or CONTRACTOR may make a Claim for an adjustment in the Contract Amount in accordance with Article 11 if:

.1 the actual quantity of any Major Item should become as much as twenty percent (20%) more than or twenty percent (20%) less than that in the Bid; or

.2 CONTRACTOR presents documentation contesting accuracy of "plan quantity" and Owner's Representative verifies quantity and determines original value is in error by five percent (5%) or more;

Provided, however, in the event a Major Item is reduced by twenty percent (20%) or more of the amount in the Bid, no additional Article 11 profit or overhead will be added, if, due to other additions in the Work, the net value of the Contract Amount is not reduced.

ARTICLE 12 - CHANGE OF CONTRACT TIMES

12.1 Working Day and Calendar Day Contracts:

12.1.1 The Contract Times (or Milestones) may only be changed by Change Order or Time Extension Request duly executed by both CONTRACTOR and Owner's Representative. Any claim for an adjustment of the Contract Times (or Milestones) shall be made by Written Notice delivered by the party making the Claim to the other party promptly (but in no event later than thirty (30) calendar days after the start of the occurrence or event giving rise to the delay) and stating the general nature of the delay. Notice of the extent of the delay with supporting data shall be delivered within thirty (30) calendar days after Written Notice of Claim is delivered by claimant, and shall represent that the adjustment claimed is the entire adjustment to which claimant is entitled as a result of said occurrence or event. If OWNER and CONTRACTOR cannot otherwise agree, all Claims for adjustment in the Contract Times (or Milestones) shall be determined as set out in Article 16. No Claim for an adjustment in the Contract Times (or Milestones) will be valid if not submitted in accordance with the requirements of this paragraph.

12.1.2 When CONTRACTOR is at fault and OWNER stops the Work, so that corrections in the Work can be made by CONTRACTOR, no extension in time will be allowed.

12.1.3 When CONTRACTOR is prevented from completing any part of the Work within the Contract Times (or Milestones) due to delay beyond the control of both OWNER and CONTRACTOR, an extension of the Contract Times (or Milestones) in an amount equal to the time lost due to such delay shall be CONTRACTOR's sole and exclusive remedy for such delay. If performance by the CONTRACTOR or OWNER is interrupted by any occurrence not occasioned by its own conduct, whether such occurrence be an act of god or the result of war, riot, civil commotion, sovereign conduct, or the conduct of a third party, then such performance will be excused for a period of time necessary to remedy its effects, provided, however, in such an event, a conference will be held within three (3) business days to establish a proposed new Progress Schedule for the Project.

12.1.4 OWNER will consider time extension requests and may grant CONTRACTOR an extension of time because of:

.1 Changes ordered in the work which justify additional time.

.2 Failure of materials or products being at the Project site due to delays in transportation or failures of Suppliers, which are not the result of CONTRACTOR's, Subcontractor's or Supplier's negligence. The request for an extension of time shall be supported by a citation of acts demonstrating that the delays are beyond CONTRACTOR's control, including, but not limited to, CONTRACTOR's efforts to overcome such delays documented as follows:

a) Copy of purchase order for delayed item(s) indicating date ordered by CONTRACTOR/ Subcontractor and date purchase order received by Supplier.

b) If item(s) require Shop Drawings or other submittal information in accordance with the Contract Documents, provide record of date

submittal(s) forwarded to Owner's Representative, date submittal(s) returned to CONTRACTOR, and date submittal(s) forwarded to Supplier.

c) Copy of document(s) from Supplier, on Supplier's letterhead, indicating date(s) item(s) would be ready for shipment and/or actual shipment date(s).

d) Copies of all correspondence between CONTRACTOR / Subcontractor and Supplier indicating CONTRACTOR / Subcontractor's efforts to expedite item(s).

e) If item(s) are being purchased by a Subcontractor, provide correspondence, meeting notes, etc., that reflect CONTRACTOR's efforts with the Subcontractor to expedite delivery of the item(s).

.3 When acts of OWNER, E/A, utility owners or other contractors employed by OWNER delay progress of work through no fault of CONTRACTOR. The CONTRACTOR will only be entitled to an extension of time for delays that affect the Critical Path of the Work and that are not caused by the CONTRACTOR.

.4 When CONTRACTOR is delayed by strikes, lockouts, fires, losses from natural causes, or other unavoidable cause or causes beyond CONTRACTOR's control.

12.2 Calendar Day Contracts:

12.2.1 Under a Calendar Day Contract, CONTRACTOR may be granted an extension of time because of unusual inclement weather, including but not limited to unusual rainfall events, which are beyond the normal rainfall recorded and expected for Austin, Texas. However, the CONTRACTOR will not be granted an extension of time for “normal rainfall”, as described below.

12.2.2 "Unusual Inclement Weather" is defined as a rain event or other weather related event which occurs at the site and is of sufficient magnitude to prevent CONTRACTOR from performing units of Work critical to maintaining the Progress Schedule.

12.2.3 Baseline Rain Day Determination. “Normal rainfall” compiled by the State climatologist, based on U.S. Weather Bureau Records for Austin, Texas, is considered a part of the Calendar Day Contract, and is not a justification for an extension of time. Listed below are the number of days in each month for which no compensatory days for rainfall events (“Rain Days”) in such months may be claimed:

January..... 8 days

February..... 8 days

March..... 7 days

April..... 7 days

May..... 9 days

June..... 6 days

July..... 5 days

August..... 5 days

September..... 7 days

October..... 7 days

November..... 7 days

December..... 7 days

Rain Days in addition to the baseline Rain Day determination described above will be measured with the Owner's Representative's approval at the nearest operational public weather data collection facility to the site, including but not limited to the OWNER's early warning flood gauge system.

12.2.4 CONTRACTOR may receive credit in any month for Unusual Inclement Weather, and specifically for any Rain Days in that month which exceed the number of Rain Days allocated to that month, if a Claim is made in accordance with paragraph 12.1.1 and the weather event meets the definition for "Unusual Inclement Weather", and as applicable, "Rain Day" and such claimed day is a day on which Work critical to maintaining the Progress Schedule is scheduled to be performed and is otherwise capable of being performed.

ARTICLE 13 - TESTS AND INSPECTIONS; CORRECTION, REMOVAL OR ACCEPTANCE OF DEFECTIVE WORK

13.1 Notice of Defects: Prompt notice of all defective Work of which OWNER or E/A has actual knowledge will be given to CONTRACTOR. All defective Work may be rejected, corrected or accepted as provided in Article 13. CONTRACTOR must give OWNER and E/A prompt notice of any defective Work of which CONTRACTOR has actual knowledge.

13.2 Access to Work: OWNER, E/A, E/A's Consultants, other representatives and personnel of OWNER, independent testing laboratories and governmental agencies having jurisdiction will have access to the Work at reasonable times for observing, inspecting and testing. CONTRACTOR shall provide them proper and safe conditions for such access, and advise them of CONTRACTOR's site safety procedures and programs so that they may comply therewith as applicable.

13.3 Tests and Inspections:

13.3.1 CONTRACTOR shall give timely notice of readiness of the Work for all required inspections, tests or approvals, and shall cooperate with inspection and testing personnel to facilitate required inspections or tests.

13.3.2 OWNER shall employ and pay for services of an independent testing laboratory to perform all inspections, tests or approvals required by the Contract Documents except:

.1 for inspections, tests or approvals covered by paragraphs 13.3.3 and 13.3.4 below;

.2 that costs incurred for tests or inspections conducted pursuant to paragraph 13.4.3 shall be paid as provided in paragraph 13.4.3;

.3 for reinspecting or retesting defective Work, including any associated costs incurred by the testing laboratory for cancelled tests or standby time; and

.4 as otherwise specifically provided in the Contract Documents.

13.3.3 If laws or regulations of any public body having jurisdiction require any Work (or part thereof) specifically to be inspected, tested or approved by an employee or other representative of such public body, CONTRACTOR shall assume full responsibility for arranging and obtaining such inspections, tests or approvals, pay

all costs in connection therewith and furnish Owner's Representative the required certificates of inspection or approval.

13.3.4 CONTRACTOR shall also be responsible for arranging and obtaining and shall pay all costs in connection with any inspections, tests or approvals required for OWNER's and E/A's review of submittals covering materials, equipment, and mix designs to be incorporated in the Work.

13.3.5 All testing laboratories shall meet the requirements of ASTM E-329.

13.4 Uncovering Work:

13.4.1 If any Work (or the work of others) that is to be inspected, tested or approved is covered by CONTRACTOR without written concurrence of Owner's Representative, or if any Work is covered contrary to the written request of Owner's Representative, it must, if requested by Owner's Representative, be uncovered and recovered at CONTRACTOR's expense.

13.4.2 Uncovering Work as provided in paragraph 13.4.1 shall be at CONTRACTOR's expense unless CONTRACTOR has given Owner's Representative timely notice of CONTRACTOR's intention to cover the same and Owner's Representative has not acted within five (5) working days to such notice.

13.4.3 If Owner's Representative considers it necessary or advisable that covered Work be observed, inspected or tested, CONTRACTOR shall uncover, expose or otherwise make available for observation, inspection or testing that portion of the Work in question, furnishing all necessary labor, material and equipment. If it is found that such Work is defective, CONTRACTOR shall pay all claims, costs, losses and damages caused by, arising out of or resulting from such uncovering, exposure, observation, inspection and testing and of satisfactory replacement or reconstruction (including but not limited to all costs of repair or replacement of work of others); and OWNER shall be entitled to an appropriate decrease in the Contract Amount, and may make a Claim therefor as provided in Article 11. If, however, such Work is not found to be defective, CONTRACTOR shall be allowed an increase in the Contract Amount or an extension of the Contract Times (or Milestones), or both, directly attributable to such uncovering, exposure, observation, inspection, testing, replacement and reconstruction; and CONTRACTOR may make a Claim therefor as provided in Articles 11 and 12.

13.5 OWNER May Stop the Work:

13.5.1 If the Work is defective, or CONTRACTOR fails to supply sufficient skilled workers, suitable materials, and/or equipment; or fails to furnish or perform the Work in such a way that the Work in progress or the completed Work will conform to the Contract Documents, OWNER may order CONTRACTOR to stop the Work, or any portion thereof, until the cause for such order has been eliminated; however, this right of OWNER to stop the Work shall not give rise to any duty on the part of OWNER to exercise this right for the benefit of CONTRACTOR or any surety or other party.

13.5.2 If CONTRACTOR fails to correct defective Work or submit a satisfactory plan to take corrective action, with procedure and time schedule, OWNER may order CONTRACTOR to stop the Work, or any portion thereof, until cause for such order has been eliminated, or take any other action permitted by this Contract. A notice to stop the Work, based on defects, shall not stop calendar or working days charged to the Project.

13.6 Correction or Removal of Defective Work: If required by OWNER, CONTRACTOR shall promptly, as directed, either correct all defective Work, whether or not fabricated, installed or completed, or, if the Work has been rejected by Owner's Representative, remove it from the site and replace it with Work that is not defective. CONTRACTOR shall correct or remove and replace defective Work, or submit a plan of action detailing how the deficiency will be corrected, within the time frame identified in the notice of defective Work. CONTRACTOR shall pay all claims, costs, losses and damages caused by or resulting from such correction or removal (including but not limited to all costs of repair or replacement of work of others).

13.7 Warranty period:

13.7.1 If within one year after the date of Substantial Completion or such longer period of time as may be prescribed by laws or regulations or by the terms of any applicable special guarantee required by the Contract Documents or by any specific provision of the Contract Documents (e.g. paragraph 14.11.2), any Work, including work performed after the Substantial Completion date, is found to be defective, CONTRACTOR shall promptly, without cost to OWNER and in accordance with OWNER's written instructions:

(i) correct such defective Work, or, if it has been rejected by OWNER, remove it from the site and replace it with Work that is not defective, and

(ii) satisfactorily correct or remove and replace any damage to other Work or the work of others resulting therefrom.

If CONTRACTOR does not promptly comply with the terms of such instructions, or in an emergency where delay would cause serious risk of loss or damage, OWNER may have the defective Work corrected or the rejected Work removed and replaced, and all claims, costs, losses and damages caused by or resulting from such removal and replacement (including but not limited to all costs of repair or replacement of work of others) will be paid by CONTRACTOR. The warranty period will be deemed to be renewed and recommenced in connection with the completed items of Work requiring correction.

13.7.2 In special circumstances where a particular item of equipment is placed in continuous service before Substantial Completion of all the Work, the warranty period for that item may start to run from an earlier date if so provided in the Contract Documents.

13.7.3 If correction of defective Work will affect the function or use of the facility CONTRACTOR shall not proceed with correction of defective Work without prior coordination and approval of OWNER.

13.7.4 The obligations of the CONTRACTOR to perform warranty work will survive the acceptance of the Work and any termination of the Contract.

13.8 Acceptance of Defective Work: If, instead of requiring correction or removal and replacement of defective Work, OWNER decides to accept it, OWNER may do so. CONTRACTOR shall pay all claims, costs, losses and damages attributable to OWNER's evaluation of and determination to accept such defective Work. If any such acceptance occurs prior to recommendation of final payment, a Change Order will be issued incorporating the necessary revisions in the Contract Documents and compensating OWNER for the diminished value of the defective Work. If the acceptance occurs after such recommendation, an appropriate amount will be paid by CONTRACTOR to OWNER after a calculation by OWNER of the diminution in value of the defective Work.

13.9 OWNER May Correct Defective Work: If CONTRACTOR fails within a reasonable time after Written Notice of OWNER to correct defective Work, or to remove and replace rejected Work, or if CONTRACTOR fails to perform the Work in accordance with the Contract Documents, or if CONTRACTOR fails to comply with any other provision of the Contract

Documents, OWNER may, after seven (7) calendar days' Written Notice to CONTRACTOR, correct and remedy any such deficiency. If, in the opinion of the Owner's Representative, significant progress has not been made during this seven (7) calendar day period to correct the deficiency, the OWNER may exercise any actions necessary to remedy the deficiency. In exercising the rights and remedies under this paragraph, OWNER shall proceed expeditiously. In connection with such corrective and remedial action, OWNER may exclude CONTRACTOR from all or part of the site, take possession of all or part of the Work, and suspend CONTRACTOR's services related thereto, and incorporate in the Work all materials and equipment stored at the site or for which OWNER has paid CONTRACTOR but which are stored elsewhere. CONTRACTOR shall allow OWNER, its agents and employees, OWNER's other contractors, E/A and E/A's consultants access to the site to enable OWNER to exercise the rights and remedies under this paragraph. All claims, costs, losses and damages incurred or sustained by OWNER in exercising such rights and remedies will be charged against CONTRACTOR and a Change Order will be issued incorporating the necessary revisions in the Contract Documents with respect to the Work. Such claims, costs, losses and damages will include but not be limited to all costs of repair or replacement of work of others destroyed or damaged by correction, removal or replacement of CONTRACTOR's defective Work. CONTRACTOR shall not be allowed an extension of the Contract Times (or Milestones), or claims of damage because of any delay in the performance of the Work attributable to the exercise by OWNER of OWNER's rights and remedies hereunder.

ARTICLE 14 - PAYMENTS TO CONTRACTOR AND COMPLETION

14.1 Application for Progress Payment:

14.1.1 Within 45 days from when the work was performed by the Contractor and Subcontractors, but not more often than once a month, CONTRACTOR shall submit to Owner's Representative for review an Application for Payment, in a form acceptable to OWNER, filled out and signed by CONTRACTOR covering the Work completed as of the date of the Application and accompanied by such supporting documentation as is required by the Contract Documents.

14.1.2 Such applications shall not include requests for payment on account of changes in the Work which have been properly authorized by Change Directives but not yet included in Change Orders.

14.1.3 Such applications shall not include requests for payment of amounts the CONTRACTOR does not intend to pay to a Subcontractor or Supplier because of a dispute or other reason.

14.1.4 If payment is requested on the basis of materials or equipment not incorporated in the Work but delivered and suitably stored at the site or at another location agreed to in writing, the Application for Payment shall be accompanied by such bills of sale, data and other procedures satisfactory to OWNER substantiating OWNER's title to such materials or equipment or otherwise protecting OWNER's interest. Payment on account of such materials or equipment will not include any amount for CONTRACTOR's overhead or profit or relieve CONTRACTOR of its obligation to protect and install such materials or equipment in accordance with the requirements of the Contract and to restore damaged or defective Work. If materials or equipment are stored at another location, at the direction of the OWNER they shall be stored in a bonded and insured facility, accessible to E/A and OWNER, and shall be clearly marked as property of OWNER. Title to materials delivered to the site of the Work or a staging area will pass to OWNER upon payment by OWNER without the necessity for further documentation. Risk of loss will not pass to OWNER until acceptance.

14.1.5 Where the original Contract Amount is less than $400,000, OWNER will pay CONTRACTOR total amount of approved Application for Payment, less ten percent (10%) of amount thereof, which ten percent (10%) will be retained until final payment, less all previous payments and less all other sums that may be retained by OWNER under the terms of this Agreement. Where the original Contract Amount is $400,000 or more, OWNER will pay CONTRACTOR total amount of approved Application for Payment, less five percent (5%) of amount thereof, which five percent (5%) will be retained until final payment, less all previous payments and less all other sums that may be retained by OWNER under the terms of this Agreement. In either case, if the Work is near completion and delay occurs due to no fault or neglect of CONTRACTOR, OWNER may pay a portion of the retained amount to CONTRACTOR. CONTRACTOR, at OWNER's option, may be relieved of the obligation to complete the Work and, thereupon, CONTRACTOR shall receive payment of the balance due under the Contract subject to the conditions stated under paragraph 15.2. A Subcontractor may submit a written request to the CONTRACTOR and Project Manager requesting release of retainage for work by the Subcontractor that has been completed and approved. The Project Manager will evaluate the request and if it is approved, the Project Manager will request the CONTRACTOR to include the request for release of an appropriate amount of retainage in the next Pay Application.

14.1.6 Applications for Payment shall include the following documentation:

.1 updated Progress Schedule;

.2 monthly subcontractor report;

.3 any other documentation required under the Supplemental General Conditions.

14.2 CONTRACTOR's Warranty of Title: CONTRACTOR warrants and guarantees that title to all Work, materials and equipment covered by any Application for Payment, whether incorporated in the Project or not, will pass to OWNER free and clear of all Liens no later than the time of payment to CONTRACTOR.

14.3 Review of Applications for Progress Payment:

14.3.1 Owner's Representative will, within seven (7) calendar days after receipt of each Application for Payment, either indicate a recommendation for payment and forward the Application for processing by OWNER, or return the Application to CONTRACTOR indicating Owner's Representative's reasons for refusing to recommend payment. In the latter case, CONTRACTOR shall make the necessary corrections and resubmit the Application.

14.3.2 Owner's Representative's recommendation of any payment requested in an Application for Payment will constitute a representation by Owner's Representative, based upon Owner's Representative's on-site observations of the executed Work and on Owner's Representative's review of the Application for Payment and the accompanying data and schedules, that to the best of Owner's Representative's knowledge, information and belief:

.1 the Work has progressed to the point indicated; and

.2 the quality of the Work is generally in accordance with the Contract Documents (subject to an evaluation of the Work as a functioning whole prior to or upon Substantial Completion, to the results of any subsequent tests called for in the Contract Documents, to a final determination of quantities and classifications for unit price Work, and to any other qualifications stated in the recommendation).

14.3.3 By recommending any such payment, Owner's Representative will not thereby be deemed to have represented that:

.1 exhaustive or continuous on-site inspections have been made to check the quality or the quantity of the Work;

.2 examination has been made to ascertain how or for what purpose CONTRACTOR has used money previously paid on account of the Contract Amount;

.3 CONTRACTOR's construction means, methods, techniques, sequences or procedures have been reviewed; or

.4 that there may not be other matters or issues between the parties that might entitle CONTRACTOR to be paid additionally by OWNER or entitle OWNER to withhold payment to CONTRACTOR.

14.4 Decisions to Withhold Payment:

14.4.1 OWNER may withhold or nullify the whole or part of any payment to such extent as may be necessary on account of:

.1 defective Work not remedied;

.2 third party Claims filed or reasonable evidence indicating probable filing of such Claims;

.3 failure of CONTRACTOR to make payments properly to Subcontractors for labor, materials or equipment;

.4 reasonable evidence that the Work cannot be completed for the unpaid balance of the Contract Amount;

.5 damage to OWNER or another contractor;

.6 reasonable evidence that the Work will not be completed within the Contract Time, and that the unpaid balance would not be adequate to cover actual or liquidated damages for the anticipated delay;

.7 failure of CONTRACTOR to submit a schedule of values in accordance with the Contract Documents;

.8 failure of CONTRACTOR to submit a submittal schedule in accordance with the Contract Documents;

.9 failure of CONTRACTOR to submit and update a construction Progress Schedule in accordance with the Contract Documents;

.10 failure of CONTRACTOR to maintain a record of changes on drawings and documents;

.11 failure of CONTRACTOR to maintain weekly payroll reports and, as applicable, provide copies of reports in a timely manner upon request of OWNER;

.12 failure of CONTRACTOR to submit monthly subcontractor reports;

.13 CONTRACTOR's neglect or unsatisfactory prosecution of the Work, including failure to clean up;

.14 failure of CONTRACTOR to comply with the Austin City Code, Chapter 2-9-A, as amended, “Minority-Owned and Women-Owned Business Enterprise Procurement Program;” or

.15 failure of CONTRACTOR to comply with any provision of the Contract Documents.

14.4.2 When the above reasons for withholding payment are removed, CONTRACTOR shall resubmit a statement for the value of Work performed. Payment will be made within thirty (30) calendar days of receipt of approved Application for Payment.

14.4.3 Subcontractors may request Partial Payment when the OWNER withholds payment of an invoice to the CONTRACTOR for any reason listed in Section 14.4.1. If payment is withheld by the OWNER, the CONTRACTOR shall notify all affected Subcontractors within two (2) working days of notice that payment is being withheld. Upon notification, Subcontractors may submit a formal written request for Partial Payment to the CONTRACTOR and OWNER. If directed by the OWNER, the CONTRACTOR shall within three (3) working days resubmit to the OWNER an invoice for the same period that includes only the work performed by the requesting Subcontractors during this period. The OWNER will review this resubmitted invoice in accordance with Section 14.3.1. Upon receipt of payment for the resubmitted invoice, CONTRACTOR shall pay the subcontractor within ten (10) Calendar Days in accordance with Section 6.4.7.

14.5 Delayed Payments: Should OWNER fail to make payment to CONTRACTOR of sum named in any Application for Payment within thirty (30) calendar days after the day on which OWNER received the mutually acceptable Application for Payment, then OWNER will pay to CONTRACTOR, in addition to sum shown as due by such Application for Payment, interest thereon at the rate specified in Government Code, Section 2251.025(b) from date due until fully paid, which shall fully liquidate any injury to CONTRACTOR growing out of such delay in payment.

14.6 Arrears: No money shall be paid by OWNER upon any claim, debt, demand or account whatsoever, to any person, firm or corporation who is in arrears to City for taxes; and City shall be entitled to counterclaim and automatically offset against any such debt, claim, demand or account in the amount of taxes so in arrears and no assignment or transfer of such debt, claim, demand or account after said taxes are due, shall affect the right of OWNER to so offset said taxes, and associated penalties and interest if applicable, against the same.

14.7 Substantial Completion:

14.7.1 When the CONTRACTOR considers that the Work, or a portion thereof which the OWNER agrees to accept separately, is substantially complete, the CONTRACTOR shall notify Owner's Representative and request a determination as to whether the Work or designated portion thereof is substantially complete. If Owner's Representative does not consider the Work substantially complete, Owner's Representative will notify CONTRACTOR giving reasons therefor. After performing any required Work, CONTRACTOR shall then submit another request for Owner's Representative to determine Substantial Completion. If Owner's Representative considers the Work substantially complete, Owner's Representative will prepare and deliver a certificate of Substantial Completion which shall establish the date of Substantial Completion, shall include a punch list of items to be completed or corrected before final payment, shall establish the time within which CONTRACTOR shall finish the punch list, and shall establish responsibilities of the OWNER and CONTRACTOR for security, maintenance, heat, utilities, damage to the Work, warranty and insurance. Failure to include an item on the punch list does not alter the responsibility of CONTRACTOR to complete all Work in accordance with the Contract Documents. If a Certificate of Occupancy is required by public authorities having jurisdiction over the Work, said certificate shall be issued before the Work or any portion thereof is considered substantially complete. The certificate of Substantial Completion shall be signed by OWNER and CONTRACTOR to evidence acceptance of the responsibilities assigned to them in such certificate.

14.7.2 OWNER shall have the right to exclude CONTRACTOR from the Work after the date of Substantial Completion, but OWNER will allow CONTRACTOR reasonable access to complete or correct items on the punch list and complete warranty work.

14.8 Partial Utilization: Use by OWNER, at OWNER's option, of any substantially completed part of the Work which: (i) has specifically been identified in the Contract Documents, or (ii) OWNER and CONTRACTOR agree constitutes a separately functioning and usable part of the Work that can be used by OWNER for its intended purpose without significant interference with CONTRACTOR's performance of the remainder of the Work, may be accomplished prior to Substantial Completion of all the Work in accordance with the following:

14.8.1 OWNER at any time may request CONTRACTOR to permit OWNER to use any such part of the Work which OWNER believes to be ready for its intended use and substantially complete. If CONTRACTOR agrees that such part of the Work is substantially complete, CONTRACTOR shall certify to Owner's Representative that such part of the Work is substantially complete and request Owner's Representative to issue a certificate of substantial Completion for that part of the Work. CONTRACTOR at any time may notify Owner's Representative that CONTRACTOR considers any such part of the Work ready for its intended use and substantially complete and request Owner's Representative to issue a certificate of Substantial Completion for that part of the Work. The provisions of paragraphs 14.7.1 and 14.7.2 will apply with respect to certification of Substantial Completion of that part of the Work and the division of responsibility in respect thereof and access thereto.

14.8.2 Such partial utilization is authorized by public authorities having jurisdiction over the Work.

14.9 Final Inspection: Upon Written Notice from CONTRACTOR that the entire Work or an agreed portion thereof is complete, Owner's Representative will make a final inspection with CONTRACTOR and provide Written Notice of all particulars in which this inspection reveals that the Work is incomplete or defective. CONTRACTOR shall immediately take such measures as are necessary to complete such Work or remedy such deficiencies.

14.10 Final Application for Payment: CONTRACTOR may make application for final payment following the procedure for progress payments after CONTRACTOR has completed all such corrections to the satisfaction of Owner's Representative and delivered the following documents:

14.10.1 Affidavit by CONTRACTOR certifying the payment of all debts and claims;

14.10.2 Three (3) complete operating and maintenance manuals, each containing maintenance and operating instructions, schedules, guarantees, and other documentation required by the Contract Documents;

14.10.3 Record documents (as provided in paragraph 6.10);

14.10.4 Consent of surety, if any, to final payment. If surety is not provided, complete and legally effective releases or waivers (satisfactory to OWNER) of all claims arising out of or filed in connection with the Work;

14.10.5 Certificate evidencing that insurance required by the Supplemental General Conditions will remain in force after final payment and through the warranty period;

14.10.6 Non-Use of Asbestos Affidavit (After Construction);

14.10.7 Subcontractor report and all other documentation necessary for evaluation of CONTRACTOR's fulfillment of the Contract MBE/WBE or DBE goals;

14.10.8 Documentation of notice to claimants, to the extent applicable and subject to subparagraph 14.11.4; and

14.10.9 Any other documentation called for in the Contract Documents.

14.11 Final Payment and Acceptance:

14.11.1 If, on the basis of observation of the Work during construction, final inspection, and review of the final Application for Payment and accompanying documentation as required by the Contract Documents, Owner's Representative is satisfied that the Work has been completed and CONTRACTOR's other obligations under the Contract Documents have been fulfilled and there are no outstanding claims, Owner's Representative will recommend the final Application for Payment and thereby notify the OWNER, who will pay to CONTRACTOR the balance due CONTRACTOR under the terms of the Contract. If the sole remaining unfinished item to complete the Work is the reestablishment of vegetation, CONTRACTOR may execute a revegetation letter with fiscal posted (letter of credit) to ensure completion of this item. This Work must be accomplished within one hundred twenty (120) Calendar Days of the date of Final Completion of the Work. When the permanent erosion control has been established, OWNER will initiate an inspection for final acceptance of the erosion controls. If the revegetation is not completed within the one hundred twenty (120) Calendar Days, OWNER, at its option, may complete the Work using the posted fiscal.

14.11.2 If the Contract measures Contract Time to Final Completion, rather than Substantial Completion, Owner's Representative will issue a letter of final acceptance to CONTRACTOR which establishes the Final Completion date and initiates the one-year warranty period. If the sole remaining unfinished item to complete the Work is the reestablishment of vegetation and CONTRACTOR has executed a revegetation letter with fiscal posted (letter of credit) to ensure completion of this item, the Owner’s Representative will issue a letter of conditional acceptance to CONTRACTOR which established the Final Completion date and initiates the one-year warranty period.

14.11.3 Final payment is considered to have taken place when CONTRACTOR or any of its representatives negotiates OWNER's final payment check, whether labeled final or not, for cash or deposits check in any financial institution for its monetary return.

14.11.4 The OWNER will withhold funds sufficient to cover the amount of any unresolved contract claims from final payment for six months under the following limited conditions:

.1 CONTRACTOR must provide written notice to the claimant (via certified mail or hand delivery) that (i) OWNER will hold funds in the amount of the disputed claim for six (6) months from the date of the receipt of the notice and (ii) CONTRACTOR and the claimant have certain alternative dispute resolution rights; and

.2 CONTRACTOR must provide OWNER with a copy of the receipted notice.

Provided the claimant has received notice under this section, OWNER will release the withheld funds, if the CONTRACTOR provides a bond in substantial compliance with the provisions of Section 52.231 of the Texas Property Code; when the OWNER receives a settlement or release of the claim with accompanying instructions regarding payment; upon resolution of the claim in litigation, if suit is filed within such six (6) month period and the OWNER receives written notice of such filing; or when such six (6) month period has passed, if no such bond, settlement, release, or notice of filing of suit have been received. The above provisions notwithstanding, if efforts to timely resolve a disputed claim are not

being made to OWNER'S reasonable satisfaction, OWNER may, in its complete discretion, file an interpleader action and deposit the withheld funds in the registry of a court of competent jurisdiction. In addition, CONTRACTOR must include a provision in each of its subcontracts that the prevailing party in any litigation arising thereunder will be entitled to recover its costs of court and reasonable attorney's fees.

14.12 Waiver of Claims: The making and acceptance of final payment will constitute:

14.12.1 a waiver of claims by OWNER against CONTRACTOR, except claims arising from unsettled claims, from defective Work appearing after final inspection, from failure to comply with the Contract Documents or the terms of any warranty specified therein, or from CONTRACTOR's continuing obligations under the Contract Documents; and

14.12.2 a waiver of all claims by CONTRACTOR against OWNER other than those previously made in writing and still unsettled.

ARTICLE 15 - SUSPENSION OF WORK AND TERMINATION

15.1 OWNER May Suspend Work Without Cause: At any time and without cause, OWNER may suspend the Work or any portion thereof for a period of not more than ninety (90) calendar days by Written Notice to CONTRACTOR which will fix the date on which the Work will be resumed. CONTRACTOR shall resume the Work on the date so fixed. CONTRACTOR shall be allowed an adjustment in the Contract Amount or an extension of the Contract Times, or both, directly attributable to any such suspension if CONTRACTOR makes an approved Claim therefor as provided in Articles 11 and 12.

15.2 OWNER May Terminate Without Cause: Upon seven (7) calendar days' Written Notice to CONTRACTOR, OWNER may, without cause and without prejudice to any right or remedy of OWNER, elect to terminate the Agreement. In such case, CONTRACTOR shall be paid (without duplication of any items):

15.2.1 for completed and acceptable Work executed in accordance with the Contract Documents prior to the effective date of termination;

15.2.2 for reasonable demobilization costs;

15.2.3 for anticipated profits on completed and accepted Work not previously paid and not included in separate pay items calculated to date of termination but not for anticipated profit on the entire Contract not previously paid, unabsorbed overhead, or lost opportunity; and

15.2.4 for all claims incurred in settlement of terminated contracts with Subcontractors, Suppliers and others, including for anticipated profits on completed and accepted Work not previously paid and not included in separate pay items calculated to date of termination but not for anticipated profit on the entire Contract not previously paid, unabsorbed overhead, or lost opportunity. CONTRACTOR agrees to negotiate in good faith with Subcontractors, Suppliers and others to mitigate OWNER's cost.

15.3 OWNER May Terminate With Cause:

15.3.1 Upon the occurrence of any one or more of the following events:

.1 if CONTRACTOR persistently fails to perform the Work in accordance with the Contract Documents;

.2 if CONTRACTOR disregards laws or regulations of any public body having jurisdiction;

.3 if CONTRACTOR disregards the authority of Owner's Representative;

.4 if CONTRACTOR makes fraudulent statements;

.5 if CONTRACTOR fails to maintain a work force adequate to accomplish the Work within the Contract Time;

.6 if CONTRACTOR fails to make adequate progress and endangers successful completion of the Contract; or

.7 if CONTRACTOR otherwise violates in any substantial way any provisions of the Contract Documents;

OWNER may, after giving CONTRACTOR (and the surety, if any) seven (7) calendar days Written Notice terminate the services of CONTRACTOR. OWNER, at its option, may proceed with negotiation with surety for completion of the Work. Alternatively, OWNER may under these circumstances exclude CONTRACTOR from the site and take possession of the Work (without liability to CONTRACTOR for trespass or conversion), incorporate in the Work all materials and equipment stored at the site or for which OWNER has paid CONTRACTOR but which are stored elsewhere, and finish the Work as OWNER may deem expedient. In such case CONTRACTOR shall not be entitled to receive any further payment until the Work is finished. If the unpaid balance of the Contract Amount exceeds all claims, costs, losses and damages sustained by OWNER arising out of or resulting from completing the Work, such excess will be paid to CONTRACTOR. If such claims, costs, losses and damage exceed such unpaid balance, CONTRACTOR or surety shall pay the difference to OWNER. In the event that a termination for cause is found to be wrongful, the termination shall be converted to a termination without cause as set forth in Section 15.2 and CONTRACTOR'S remedy for wrongful termination is limited to the recovery of the payments permitted for termination without cause as set forth in Section 15.2.

15.3.2 Where CONTRACTOR's services have been so terminated by OWNER, the termination will not affect any rights or remedies of OWNER against CONTRACTOR and surety then existing or which may thereafter accrue. Any retention or payment of moneys due CONTRACTOR by OWNER will not release CONTRACTOR from liability. In the event OWNER terminates Contract with cause, OWNER may reject any and all Bids submitted by CONTRACTOR for up to three (3) years after the date of such termination. These Progressive Sanctions will be administered in accordance with the City of Austin Purchasing Office Probation, Suspension, and Debarment Procedures for Vendors, which include notice and an opportunity for a hearing.

15.4 CONTRACTOR May Stop Work or Terminate: If through no act or fault of CONTRACTOR, the Work is suspended for a period of more than ninety (90) calendar days by OWNER or under an order of court or other public authority, or (except during disputes) Owner's Representative fails to forward for processing any mutually acceptable Application for Payment within thirty (30) calendar days after it is submitted, or (except during disputes) OWNER fails for sixty (60) calendar days after it is submitted to pay CONTRACTOR any sum finally determined by OWNER to be due, then CONTRACTOR may, upon seven (7) calendar days' Written Notice to OWNER, and provided OWNER does not remedy such suspension or failure within that time, terminate the Agreement and recover from OWNER payment on the same terms as provided in paragraph 15.2. In lieu of terminating the Agreement and without prejudice to any other right or remedy, if (except during disputes) Owner's Representative has failed to forward for processing any mutually acceptable Application for Payment within thirty (30) calendar days after it is submitted, or (except during disputes)

OWNER has failed for sixty (60) calendar days after it is submitted to pay CONTRACTOR any sum finally determined by OWNER to be due, CONTRACTOR may upon seven (7) calendar days' Written Notice to OWNER stop the Work until payment of all such amounts due CONTRACTOR, including interest thereon. The provisions of this paragraph 15.4 are not intended to preclude CONTRACTOR from making a Claim under Articles 11 and 12 for an increase in Contract Amount or Contract Times or otherwise for expenses or damage directly attributable to CONTRACTOR's stopping Work as permitted by this paragraph.

15.5 Discretionary Notice to Cure: In its complete discretion, OWNER may, but is not required to, provide a Notice to Cure to CONTRACTOR and its surety to cure an event of default described above and/or an anticipatory breach of contract and, if required by OWNER, to attend a meeting with OWNER, regarding the Notice to Cure, the event of default, and/or the anticipatory breach of contract. The Notice to Cure will set forth the time limit in which the cure is to be completed or commenced and diligently prosecuted. Upon receipt of any Notice to Cure, CONTRACTOR shall prepare a report describing its program and measures to affect the cure of the event of default and/or anticipatory breach of contract within the time required by the Notice to Cure. The CONTRACTOR'S report must be delivered to OWNER at least three (3) days prior to any requested meeting with the OWNER and surety.

15.6 Bankruptcy: If CONTRACTOR declares bankruptcy or is adjudged bankrupt or makes an assignment for the benefit of creditors or if a receiver is appointed for the benefit of creditors or if a receiver is appointed by reason of CONTRACTOR'S insolvency, CONTRACTOR may be unable to perform this Contract in accordance with the Contract requirements. In such an event, OWNER may demand CONTRACTOR or its successor in interest provide OWNER with adequate assurance of CONTRACTOR'S future performance in accordance with the terms and conditions of the Contract. If CONTRACTOR fails to provide adequate assurance of future performance to OWNER'S reasonable satisfaction within ten (10) days of such a request, OWNER may terminate the CONTRACTOR'S services for cause or without cause, as set forth above. If CONTRACTOR fails to provide timely adequate assurance of its performance and actual performance, OWNER may prosecute the Work with its own forces or with other contractors on a time and material or other appropriate basis and the cost of which will be charged against the Contract balance.

15.7 Duty to Mitigate: In the event of any termination or suspension under this Contract, the CONTRACTOR agrees to and shall take all reasonable actions to mitigate its damages and any and all claims which may be asserted against the OWNER.

15.8 Responsibility during Demobilization: While demobilizing, the CONTRACTOR will take all necessary and reasonable actions to preserve and protect the Work, the site and other property of the OWNER or others at the site.

ARTICLE 16 - DISPUTE RESOLUTION

16.1 Filing of Claims:

16.1.1 Claims arising from the circumstances identified in paragraphs 3.2, 4.1, 4.2.2, 4.2.4, 6.4.2, 6.11.5.2, 6.17, 7.5, 8.6, 9.5, 10.4.2, 13.4.3, 13.8, 13.9, 15.1, 15.2, 15.3, or 15.4, or other occurrences or events, shall be made by Written Notice delivered by the party making the Claim to the other party within thirty (30) calendar days after the start of the occurrence or event giving rise to the Claim and stating the general nature of the Claim. Notice of the amount of the Claim with supporting data shall be delivered in writing within thirty (30) calendar days after Written Notice of Claim is delivered by claimant and shall represent that the adjustment claimed covers all known amounts and/or extensions of time to which claimant is entitled.

16.1.2 Within thirty (30) calendar days of receipt of notice of the amount of the Claim with supporting data, Owner's Representative and CONTRACTOR shall meet to discuss the Claim, after which an offer of settlement or notification of no settlement offer will be made to claimant. If claimant is not satisfied with the proposal presented, claimant shall have thirty (30) calendar days in which to: (i) submit additional supporting data requested by the other party; (ii) modify the initial Claim; or (iii) request Alternative Dispute Resolution.

16.2 Alternative Dispute Resolution:

16.2.1 If a dispute exists concerning a Claim, the parties agree to use the following procedure prior to pursuing any other available remedies. OWNER reserves the right to include the E/A as a party.

16.2.2 Negotiating with Previously Uninvolved Personnel: Either party may make a written request for a meeting to be held between representatives of each party within fourteen (14) Calendar Days of the request or such later period that the parties may agree to. Each party shall endeavor to include, at a minimum, one (1) previously uninvolved senior level decision maker (an owner, officer, or employee of each organization) empowered to negotiate on behalf of their organization. If a previously uninvolved senior level decision maker is unavailable due to the size of the CONTRACTOR'S organization or any other reason, the CONTRACTOR shall nonetheless provide an appropriate senior level decision maker for the meeting. The purpose of this and any subsequent meetings will be good faith negotiations of the matters constituting the dispute. Negotiations shall be concluded within thirty (30) Calendar Days of the first meeting, unless mutually agreed otherwise. This step may be waived by a written agreement signed by both parties, in which event the parties may proceed directly to mediation as described below.

16.2.3 Mediation:

.1 If the procedure described in 16.2.2 proves unsuccessful or is waived pursuant to its terms, the parties shall initiate the mediation process. OWNER and CONTRACTOR agree to select within thirty (30) calendar days a mediator trained in mediation skills, to assist with resolution of the dispute. OWNER and CONTRACTOR agree to act in good faith in the selection of the mediator and to give consideration to qualified individuals nominated to act as mediator. Nothing in this agreement prevents the parties from relying on the skills of a person who also is trained in the subject matter of the dispute and/or a contract interpretation expert. Should the parties fail to agree on a mediator within thirty (30) calendar days of initiation of the mediation process, the parties agree to ask the Travis County Dispute Resolution Center to select a qualified individual, which selection shall be binding on the parties.

.2 Mediation is a forum in which an impartial person, the mediator, facilitates communication between parties to promote reconciliation, settlement, or understanding among them. The parties hereby agree that mediation, at a minimum, shall provide for (i) conducting an on-site investigation, if appropriate, by the mediator for fact gathering purposes, (ii) a meeting of all parties for the exchange of points of view and (iii) separate meetings between the mediator and each party to the dispute for the formulation of resolution alternatives. The parties agree to participate in mediation in good faith for up to thirty (30) calendar days from the date of the first mediation session, unless mutually agreed otherwise. Should the parties fail to reach a resolution of the dispute through mediation, then each party is released to pursue other remedies available to them.

16.3 Resolution of Disputes between Contractor and Subcontractor or Supplier: If a dispute exists concerning a claim between a CONTRACTOR and a Subcontractor or Supplier, the CONTRACTOR agrees to participate with such Subcontractor and/or Supplier in a process substantially paralleling the steps set out in paragraphs 16.1 and 16.2 above, including the delivery of written notices, submission of supporting data, negotiation with previously uninvolved personnel, and, if such alternative dispute resolution process is unsuccessful, mediation between the parties to the claim. If the CONTRACTOR and Subcontractor or Supplier agreement provides an alternative dispute resolution process, which provides substantially equivalent rights to those set forth herein, it may be followed, unless the CONTRACTOR and affected Subcontractor or Supplier agree to follow the process outlined above. The OWNER is not a party to the alternative dispute resolution process between the CONTRACTOR and Subcontractor or Supplier and will not pay any costs incurred in the process. Each party will be responsible for its own expenses incurred in the process, which will include an equal share of the mediation expenses, unless otherwise determined by the mediator. NOTICE: THE PROCESS SET FORTH HEREIN IS NOT A SUBSTITUTE FOR THE STATUTORY PAYMENT BOND CLAIM PROCESS.

16.4 Claim Calculation:

16.4.1 Delay Claims: The intent of paying for delay damages is to reimburse the CONTRACTOR for actual expense arising out of a compensable delay. No profit or force account markups, other than labor burden, will be allowed for delay claims by the CONTRACTOR seeking reimbursement for expenses arising out of an alleged event of delay. No consequential damages will be allowed to the CONTRACTOR in connection with any claimed delays. If the CONTRACTOR requests compensation for delay damages and the delay is determined to be compensable, then standby equipment costs and project overhead compensation will be based on the duration of the compensable delay and the following:

.1 Standby equipment costs will not be allowed during periods when the equipment would have otherwise been idle. Standby equipment time will not exceed more than eight (8) hours per twenty-four (24) hour day, forty (40) hours per week, and one hundred seventy-six (176) hours per month. Standby equipment costs will be paid at 50 percent (50%) of the applicable Rental Rate Blue Book rates and calculated by dividing the monthly rate by one hundred seventy-six (176), multiplying the result by the number of standby hours and multiplying that number by the regional adjustment factor and the rate adjustment factor contained in the Blue Book. Operating costs will not be allowed.

.2 Project overhead will be determined from actual costs that the CONTRACTOR will be required to document. Project overhead is defined as the administrative and supervisory expenses incurred at the work site and will not include home office overhead.

16.4.2 General: Except as limited with respect to delay claims, as set forth above, the criteria set forth in Section 11.4.1 may be used as a basis to calculate an adjustment in the Contract Amount in the resolution of a claim, provided that there will be no compensation for home office overhead.

16.5 MBE/WBE Program Progressive Sanctions: CONTRACTOR is subject to progressive sanctions for failure of CONTRACTOR to comply with Austin City Code, Chapter 2-9A, as amended: "Minority-owned and Women-owned Business Enterprise Procurement Program." Available sanctions for Program violations are set forth in Program rules adopted by the Small and Minority Business Resources Department (SMBR), as amended, and may include the following progressive sanctions for Program violations within a rolling 24-month period: (i) a period of probation for up to six (6) months for the first violation (ii) a period of suspension from bidding for up to 24 months for the second violation, and (iii) a period of

debarment for up to five (5) years for the third violation. If the CONTRACTOR engages in more than one of the violations listed below at any given time, OWNER has the discretion to determine whether such actions should be counted as multiple violations of the MBE/WBE Ordinance. Program violations include:

.1 providing false or misleading information to the OWNER in connection with the submission of a Bid, responses to request for qualifications or Proposals, Good Faith Efforts documentation, post award compliance or other Program operations;

.2 substituting M/WBE Subcontractors without first receiving approval for such substitutions;

.3 failure to comply with the approved Compliance Plan without an approved request for a change, an approved Change Order or other approved change to the Contract;

.4 violation of any other provision of the "Minority-owned and Women-owned Business Enterprise Procurement Program";

.5 providing false or misleading information to the OWNER in connection with an application for or challenge to certification, recertification or decertification as a MBE/WBE; and

.6 bid shopping.

The Progressive Sanctions will be administered in accordance with the City of Austin Purchasing Office Probation, Suspension, and Debarment Procedures for Vendors, which includes notice and an opportunity for a hearing.

ARTICLE 17 – MISCELLANEOUS

17.1 Venue: In the event of any suit at law or in equity involving the Contract, venue shall be exclusively in Travis County, Texas and the laws of the State of Texas shall apply to the interpretation and enforcement of the Contract.

17.2 Extent of Agreement: This Contract represents the entire and integrated agreement between the OWNER and CONTRACTOR with respect to the subject matter hereof and supersedes all prior negotiations, representations or agreements, either written or oral.

17.3 Cumulative Remedies: The rights and remedies available to the parties are not to be construed in any way as a limitation of any rights and remedies available to any or all of them which are otherwise imposed or available by laws or regulations, by special warranty or guarantees or by other provisions of the Contract Documents, and the provisions of this paragraph will be as effective as if repeated specifically in the Contract Documents in connection with each particular duty, obligation, right and remedy to which they apply. Specifically, the OWNER is not required to only assess liquidated damages, and OWNER may elect to pursue its actual damages resulting from the failure of the CONTRACTOR to complete the Work in accordance with the requirements of the Contract Documents.

17.4 Severability: If any word, phrase, clause, sentence or provision of the Contract, or the application of same to any person or set of circumstances is for any reason held to be unconstitutional, invalid or unenforceable, that finding shall only effect such word, phrase, clause, sentence or provision, and such finding shall not affect the remaining portions of this Contract; this being the intent of the parties in entering into the Contract; and all provisions of the Contract are declared to be severable for this purpose.

17.5 Independent Contractor: The Contract shall not be construed as creating an employer/employee relationship, a partnership, or a joint venture. CONTRACTOR is an independent contractor and CONTRACTOR's services shall be those of an independent contractor. CONTRACTOR agrees and understands that the Contract does not grant any rights or privileges established for employees of OWNER.

17.6 Prohibition of Gratuities: OWNER may, by Written Notice to CONTRACTOR, terminate the Contract without liability if is determined by OWNER that gratuities were offered or given by CONTRACTOR or any agent or representative of CONTRACTOR to any officer or employee of OWNER with a view toward securing the Contract or securing favorable treatment with respect to the awarding or amending or the making of any determinations with respect to the performing of such Contract. In the event the Contract is terminated by OWNER pursuant to this provision, OWNER shall be entitled, in addition to any other rights and remedies, to recover or withhold the amount of the cost incurred by CONTRACTOR in providing such gratuities.

17.7 Prohibition Against Personal Interest in Contracts: No officer, employee, independent consultant, or elected official of OWNER who is involved in the development, evaluation, or decision-making process of the performance of any solicitation shall have a financial interest, direct or indirect, in the Contract resulting from that solicitation. Any violation of this provision, with the knowledge, expressed or implied, of CONTRACTOR shall render the Contract voidable by OWNER.

17.8 OWNER'S Right to Audit:

17.8.1 Records means all records generated by or on behalf of CONTRACTOR and each Subcontractor and Supplier of CONTRACTOR, whether paper, electronic, or other media, which are in any way related to performance of or compliance with this Contract, including, without limitation:

.1 accounting records;

.2 written policies and procedures;

.3 subcontract files (including proposals of successful and unsuccessful Bidders, Bid recaps, etc.);

.4 original estimates and estimating work sheets;

.5 correspondence;

.6 Change Order files (including documentation covering negotiated settlements);

.7 back charge logs and supporting documentation;

.8 general ledger entries detailing cash and trade discounts earned, insurance rebates and dividends;

.9 lump sum agreements between CONTRACTOR and any Subcontractor or Supplier;

.10 records necessary to evaluate: Contract compliance, Change Order pricing, and any Claim submitted by CONTRACTOR or any of its payees; and

.11 any other CONTRACTOR record that may substantiate any charge related to this Contract.

17.8.2 CONTRACTOR shall allow OWNER'S agent or its authorized representative to inspect, audit, and/or reproduce, or all three, all Records generated by or on behalf of CONTRACTOR and each Subcontractor and Supplier, upon OWNER'S written request. Further, CONTRACTOR shall allow OWNER'S agent or authorized

representative to interview any of CONTRACTOR'S employees, all Subcontractors and all Suppliers, and all their respective employees.

17.8.3 CONTRACTOR shall retain all its Records, and require all its Subcontractors and Suppliers to retain their respective Records, during this Contract and for three (3) years after final payment, until all audit and litigation matters that OWNER has brought to the attention of CONTRACTOR are resolved, or as otherwise required by law, whichever is longer. OWNER'S right to inspect, audit, or reproduce Records, or interview employees of CONTRACTOR or its respective Subcontractors or Suppliers exists during this Contract, and for three (3) years after final payment, until all audit and litigation matters that OWNER has brought to CONTRACTOR'S attention are resolved, or as otherwise required by law, whichever is longer, and at no cost to OWNER, either from CONTRACTOR or any of its Subcontractors or Suppliers that may furnish Records or make employees available for interviewing.

17.8.4 CONTRACTOR must provide sufficient and accessible facilities during its normal business hours for OWNER to inspect, audit, or reproduce Records, or all three, and to interview any person about the Records.

17.8.5 CONTRACTOR shall insert these requirements in each written contract between CONTRACTOR and any Subcontractor or Supplier and require each Subcontractor and Supplier to comply with these provisions.

17.9 Survival: The terms and conditions of this Contract, which contemplate a period of time beyond completion or termination will survive such completion or termination and not be merged therein or otherwise terminated.

17.10 No Waiver: The waiver of any provision of this Contract will not be deemed to be a waiver of any other provision of this Contract. No waiver of any provision of this Contract will be deemed to constitute a continuing waiver unless expressly provided in writing, nor will a waiver of any default be deemed a waiver of any subsequent defaults of the same type. The failure at any time to enforce this Contract, whether the default is known or not, shall not constitute a waiver or estoppel of the right to do so.

17.11 Conditions Precedent to Right to Sue: Notwithstanding anything herein to the contrary, the CONTRACTOR will have at least 90 days to give notice of a claim for damages as a condition precedent to the right to sue on the Contract, subject to the contractual claim and alternative dispute resolution processes set forth herein.

17.12 Waiver of Trial by Jury: OWNER and CONTRACTOR agree that they have knowingly waived the right to trial by jury and have instead agreed that, in the event of any litigation arising out of or connected to this Contract, to proceed with a trial before the court, unless both parties subsequently agree otherwise in writing.

17.13 Contractor Evaluation: The Owner will review and evaluate the Contractor's Work and performance on the Project and provide the Contractor with a written Contractor Evaluation Report in accordance with City of Austin Administrative Rule R161-13.37. Rule R161-13.37 provides an appeal process.

http://www.austintexas.gov/department/contract-management

End

I. Payment

A. Classification Definitions, Building and Heavy and Highway

Definitions for Building Construction and Heavy and Highway classifications shall conform to the current "Dictionary of Occupational Titles" as published by the U.S. Department of Labor.

B. Minimum Wages

Workers on Project shall be paid not less than wage rates, including fringe benefits, as published by the Department of Labor (DOL) or the $13.50 minimum wage required by City of Austin Ordinance No. 20160324-015, whichever is higher. The Total Minimum Wage required can be met using any combination of cash and non-cash qualified fringe benefits provided the cash component meets or exceeds the $13.50 minimum wage required.

Such wage rates shall be used throughout the Contract. If a classification is to be used, which is not listed in the attached wage rates, CONTRACTOR shall submit to OWNER rates and classification proposed for use, for approval, **prior** to performance of the Work.

All laborers and mechanics working upon the Work for this Project shall be paid unconditionally and without subsequent deduction or rebate on any account (except such payroll deductions as are permitted by regulations issued by Secretary of Labor under the Copeland Act, Title 29 CFR, Part 3) full wages accrued and when due, computed at rates not less than wage rates bound herein pertaining to type of Work being performed. When Work is of such a nature that both Building and Heavy and Highway wage scales are incorporated into contract, CONTRACTOR shall pay wage rates to mechanics or laborers performing Work in more than one classification at the rate indicated for each classification for time actually worked as determined by area practice applicable to type (Site Construction Crafts or Building Construction Crafts) of Work being performed without regards to skill. Salaried specialists (project superintendent and administrative personnel only) in the permanent employment of CONTRACTOR do not fall under any Wage Classification. A supervisor/foreman who is not exempt under 29CFR Part 541 and who spends more than a substantial amount of time (20 percent) in a given workweek as a laborer or mechanic must be paid the applicable Wage Rate for the classification of work performed for all hours engaged in such work as a laborer or mechanic.

Wage rates shall be posted by CONTRACTOR at site(s) of Work in prominent, easily accessible places where they can be seen by all workers. The following shall also be posted by the CONTRACTOR: City of Austin wage contact posters (English and Spanish), City of Austin Equal Employment Opportunity posters (English and Spanish), Workers' Compensation Notice (English and Spanish), Texas Payday Law (English and Spanish), City Rest Break Ordinance (English

and Spanish), City of Austin Non-Discrimination Statement (related to Title VI of the Civil Rights Act), and Federal Notices, as appropriate.

C. Overtime Requirements

No CONTRACTOR, Subcontractor, or Sub-subcontractor contracting for any part of contract Work which may require or involve the employment of laborers or mechanics shall require or permit any laborer or mechanic in any workweek in which he is employed on such Work, to work in excess of forty hours in such workweek unless such laborer or mechanic receives compensation at a rate not less than one and one-half times their basic rate of pay for all hours in excess of forty hours in such workweek.

Overtime wages must be calculated using the Adjusted Wage Rate specified in the Wage Rate Determination or the actual basic rate of pay, whichever is higher.

II. Apprentices

Locally & Federally Funded Projects

The terms journeyman and apprentice apply to both union and independent workers, and are not intended to imply that these positions are union workers only.

Apprentices and Trainees will be permitted to work as such only when they are registered, individually, under a bonafide Apprenticeship or Trainee program registered with the Bureau of Apprenticeship and Training, United States Department of Labor. The allowable ratio of Apprentices or Trainees to journeymen in any craft classification shall not be greater than the ratio permitted to CONTRACTOR as stated in the registered apprenticeship program standards. Any employee listed on a payroll at an Apprentice or Trainee wage rate, who is not registered as above, shall be paid the wage rate provided in Contract for Work employee actually performed. CONTRACTOR, Subcontractor, or Sub-subcontractor shall furnish to OWNER written evidence of registration of his program for Apprentices and Trainees as well as of the appropriate ratios and wage rates, for the area of construction **prior** to using any Apprentices or Trainees on this Contract.

III. Withholding of Payments

OWNER may withhold or cause to be withheld from CONTRACTOR as much of the accrued payments as necessary to pay laborers and mechanics employed by CONTRACTOR, Subcontractors, or Sub-subcontractors the amount of wages required to comply with the Contract. In the event of nonpayment of wages to laborers or mechanics working on the site of the Work of this Contract, OWNER may, after Written Notice to CONTRACTOR, take such action as may be necessary to cause suspension of any further payments or advance of funds to CONTRACTOR until such violations have ceased and until restitution has been made. Payments may also be withheld if CONTRACTOR fails to maintain weekly payroll reports or fails to provide copies in a timely manner upon request of Owner.

IV. Payrolls

A. CONTRACTOR shall keep records showing:

1. the name, address and occupation of each worker employed by the CONTRACTOR or subcontractor(s) in the construction of the public work.

2. the actual per diem wages paid to each worker.

3. Employee Certification. CONTRACTOR, all levels of Subcontractors shall identify in writing, the classification agreed to by all laborers and mechanics employed by them in the execution of the Contract, and pay not less than rates specified in the attached Wage Rate Determination(s). Contractor shall prepare a completed form for the signature of Employee and a witness shall sign the form in the presence of Employee. If work performed by worker is different than the trade classification agreed upon, the worker shall be paid for that work no less than the minimum prevailing wage for that specified trade.

4. Payroll Deduction Authorization Form. CONTRACTOR, Subcontractor, and Subsubcontractor shall prepare for employee signature a payroll deduction authorization form to identify all payroll deductions excluding those required by statute, such as federal income taxes, medicare and social security.

B. The record shall be open at all reasonable hours to inspection by the officers and agents of the Owner as requested. CONTRACTOR will be responsible to provide copies of records as requested by the Owner within two (2) working days. Payrolls relating to this Work shall be maintained during term of Contract and preserved for a period of three (3) years thereafter by CONTRACTOR for all laborers and mechanics working on the Work.

C. A Statement of Compliance, a letter signed and dated by party responsible for supervising the payment of persons employed by CONTRACTOR or subcontractor shall accompany payrolls required by Owner. The Statement of Compliance letter shall identify but is not limited to:

1. name of signatory party and title,
2. name of project, payroll period and
3. name of CONTRACTOR or Subcontractor.

The signed letter attests that the payroll complies with 29CFR issued by the Secretary of Labor.

D. Federal Funding

In the event that federal funding is used:

1. Contractor and all levels of Subcontractors shall submit weekly certified payroll reports and signed wage compliance statements to the Owner's designated office no later than seven (7) calendar days after the scheduled payday.

2. Contractors and all levels of Subcontractors shall pay all "mechanics and laborers" not less often than once per week, for work performed the previous week.

3. Submit to the Owner's designated office Standard Form 1413, Statement and Acknowledgement, from each subcontractor prior to the subcontractor performing work on the project.

V. Noncompliance

According to Chapter 2258 Texas Government Code Title 10A, a CONTRACTOR or subcontractor(s) who violates this section shall pay to the political subdivision on whose behalf the contract is made, $60 for each worker employed for each calendar day or part of the day that the worker is paid less than the wage rates stipulated in the contract. A public body shall use any money collected under this section to offset the costs incurred in the administration of this chapter.

Confirmed Disciplinary action taken by CONTRACTOR against employees who provide information during an interview or investigation by the Owner on wages received, may result in suspension or debarment from consideration of award of City contracts.

VI. Area Practice

A. Heavy and Highway Construction Rates shall be used on this Project, unless the Project consists primarily of Building Construction and Building Construction Rates are to be used.

1. Building Construction consists generally of all aspects of construction of buildings, which are sheltered enclosures with walk-in access for the purpose of housing persons, machinery, equipment or supplies, including without limitation the installation of utilities and equipment, both above and below grade level, as well as incidental demolition, grading, utilities, paving and other site work. Buildings need not be "habitable" to be classified as Building Construction and the installation of heavy machinery and/or equipment will not generally change a Building Construction project's classification.

2. The determination of Building Construction Wage Rates includes all construction trades and work necessary to complete a building, regardless of the number of contracts involved, so long as all such contracts are closely related in purpose, time and place.

B. For projects that involve both Building Construction and Heavy and Highway trades, the following classifications shall be used:

1. A multiple classification shall be used if Building Construction items are more than 20% of the Heavy and Highway project cost.

2. A multiple classification shall be used if Heavy and Highway Construction items are more than 20% of the Building Construction Project cost.

C. Split classifications/multiple wage rate schedules: When construction work requires that an employee perform work under multiple classifications or multiple wage scales, the employer must pay that worker (at least) the

highest prevailing wage or the employer payroll records must accurately set forth the times spent performing the work of each classification and under each scale. For those projects that involve both Building Construction and Heavy and Highway trades, the Heavy and Highway wage rates may only be applied to workers when engaged in site work at least five (5) feet beyond the building.

VII. Texas Open Records Act

Unless covered by an exception to mandatory disclosure under the Texas Public Information Act, Chapter 552, Texas Government Code, any and all documents submitted to the City of Austin become Public Records and are, therefore, subject to public disclosure.

Wage Rates For This Project Are Attached

End

WAGE RATE DETERMINATION

BUILDING CONSTRUCTION TYPE

COUNTY NAME : TRAVIS

Wages based on DOL Prevailing Wage Rate General Decision:TX160323 8/26/2016 TX323 and City of Austin Ordinance #20160324-015

DOL Rate column is for information only. The Total Minimum Wage Rate is derived from the Adjusted Wage Rate Required pursuant to City Ordinance plus the DOL Fringes and can be met using any combination of cash and non-cash qualified fringe benefits, provided the cash component is at least $13.50/hour.

CLASSIFICATION	DOL RATE for info only	ADJUSTED WAGE RATE REQUIRED pursuant to City Ordinance	DOL FRINGES	TOTAL MINIMUM WAGE RATE REQUIRED
Asbestos Worker/Heat & Frost Insulator (Duct, Pipe, and Mechanical System Insulation)	$ 21.57	$ 21.57	$ 10.02	$ 31.59
Boilermaker	$ 23.14	$ 23.14	$ 21.55	$ 44.69
Bricklayer	$ 20.07	$ 20.07	$ -	$ 20.07
Carpenter	$ 20.75	$ 20.75	$ 7.30	$ 28.05
Carpenter (Acoustical Ceiling Installation only)	$ 14.00	$ 14.00	$ -	$ 14.00
Carpenter (Form Work Only)	$ 15.62	$ 15.62	$ 0.05	$ 15.67
Cement Mason/Concrete Finisher	$ 15.71	$ 15.71	$ -	$ 15.71
Drywall Finisher/Taper	$ 17.06	$ 17.06	$ 4.43	$ 21.49
Drywall Hanger and Metal Stud Installer	$ 17.47	$ 17.47	$ 3.45	$ 20.92
Electrical Installer (Sound and Communication Systems, Excluding Wiring)	$ 18.00	$ 18.00	$ 2.30	$ 20.30
Electrician (Excludes Installation of Sound and Communication Systems)	$ 27.15	$ 27.15	$ 7.88	$ 35.03
Elevator Mechanic <5 years experience	$ 37.76	$ 37.76	$ 32.25	$ 70.01
Elevator Mechanic >5 years experience	$ 37.76	$ 37.76	$ 33.01	$ 70.77
Floor Layer (Carpet)	$ 21.88	$ 21.88	$ -	$ 21.88
Glazier	$ 12.83	$ 13.50	$ -	$ 13.50
HVAC Mechanic (HVAC Unit Installation Only)	$ 23.78	$ 23.78	$ 6.89	$ 30.67
Ironworker, Ornamental	$ 23.02	$ 23.02	$ 6.35	$ 29.37
Ironworker, Reinforcing	$ 12.27	$ 13.50	$ -	$ 13.50
Ironworker, Structural	$ 20.73	$ 20.73	$ 5.24	$ 25.97
*Lead Paint or Asbestos Abatement Worker	*	$ 13.50	$ -	$ 13.50
Laborer, Common or General	$ 11.44	$ 13.50	$ -	$ 13.50
Laborer, Mason Tender - Brick	$ 12.22	$ 13.50	$ -	$ 13.50
Laborer, Mason Tender - Cement/Concrete	$ 11.85	$ 13.50	$ -	$ 13.50
Laborer, Pipelayer	$ 12.45	$ 13.50	$ -	$ 13.50
Laborer, Roof Tearoff	$ 11.28	$ 13.50	$ -	$ 13.50

Operator, Backhoe/Excavator/Trackhoe	$ 19.43	$ 19.43	$ 3.49	$ 22.92
Operator, Bobcat/Skid Steer/Skid Loader	$ 13.00	$ 13.50	$ -	$ 13.50
Operator, Bulldozer	$ 14.00	$ 14.00	$ -	$ 14.00
Operator, Crane	$ 34.85	$ 34.85	$ 9.85	$ 44.70
Operator, Drill	$ 14.50	$ 14.50	$ -	$ 14.50
Operator, Forklift	$ 16.64	$ 16.64	$ 6.26	$ 22.90
Operator, Grader/Blade	$ 19.30	$ 19.30	$ -	$ 19.30
Operator, Loader	$ 14.00	$ 14.00	$ -	$ 14.00
Operator, Mechanic	$ 18.75	$ 18.75	$ 5.12	$ 23.87
Operator, Paver (Asphalt, Aggregate, and Concrete)	$ 16.03	$ 16.03	$ -	$ 16.03
Operator, Roller	$ 11.25	$ 13.50	$ -	$ 13.50
Painter (Brush, Roller, and Spray, Excludes Drywall Finishing/Taping)	$ 18.76	$ 18.76	$ 6.35	$ 25.11
Pipefitter (Including HVAC Pipe Installation)	$ 28.03	$ 28.03	$ 12.43	$ 40.46
Plumber, Excludes HVAC Pipe Installation	$ 23.57	$ 23.57	$ 6.37	$ 29.94
Roofer	$ 12.00	$ 13.50	$ -	$ 13.50
*Roofer, Metal	$ 14.05	$ 14.05	$ -	$ 14.05
Sheet Metal Worker (Including HVAC Duct Installation)	$ 24.38	$ 24.38	$ 13.74	$ 38.12
Sprinkler Fitter (Fire Sprinklers)	$ 28.18	$ 28.18	$ 17.52	$ 45.70
Tile Finisher	$ 11.32	$ 13.50	$ -	$ 13.50
Tile Setter	$ 16.35	$ 16.35	$ -	$ 16.35
Truck Driver, Dump Truck	$ 12.39	$ 13.50	$ 1.18	$ 14.68
Truck Driver, Flatbed Truck	$ 19.65	$ 19.65	$ 8.57	$ 28.22
Truck Driver, Semi-Trailer Truck	$ 12.50	$ 13.50	$ -	$ 13.50
Truck Driver, Water Truck	$ 12.00	$ 13.50	$ 4.11	$ 17.61
Waterproofer	$ 16.30	$ 16.30	$ 0.06	$ 16.36

http://www.wdol.gov/wdol/scafiles/davisbacon/tx.html

See below for Additional Wage Information.

Note: *Lead Paint & Asbestos Abatement and Roofer, Metal Classifications have been added to this Prevailing Wage Rate Determination pursuant to a City of Austin Prevailing Wage Survey (trades absent from DOL).

The Wage Compliance information detailed below was excerpted from DOL General Decision TX160323 or other sources.

1. Additional Trade information:

Electricians** - Including low voltage wiring for computers, fire/smoke alarms.
Elevator Mechanics*** - also must be paid for 7 holidays - New Years Day, Memorial Day, Independence Day, Labor Day, Thanksgiving Day, the Friday after Thanksgiving Day, Christmas Day, and Veterans Day.
Welders - Receive rate prescribed for craft performing operation to which welding is incidental.

Unlisted classifications needed for work not included within the scope of the classifications listed may be added upon the advance approval of City of Austin Contract Administration. CONTRACTOR shall submit to City of Austin Contract Administration for review the classification, a bona fide definition of work to be performed and a proposed wage with sample payrolls conforming to area practice **prior** to the start of the job for that type of work.

2. Wages

The Total Wage may be met by any combination of cash wages and credible "bona fide" fringe benefits paid for by the employer. Overtime wages must be calculated using the Adjusted Wage Rate specified in the Wage Rate Determination or the actual basic rate of pay, whichever is higher.

City of Austin Ordinance No. 20160324-015 requires that construction workers are paid a Minimum Wage of at least $13.50/hour. The cash portion of their compensation must meet or exceed this amount.

3. Crediting fringe benefit contributions to meet DBA/DBRA and City of Austin requirements:

The Davis-Bacon Act (and 29 CFR 5.23), list fringe benefits to be considered. Examples are:

> Life Insurance
> Health Insurance
> Pension
> Vacation
> Holidays
> Sick Leave

Note: The use of a truck is not a fringe benefit; a Thanksgiving turkey or Christmas bonus is not a fringe benefit. No credit may be taken for any benefit required by federal, state, or local law such as: workers compensation, unemployment compensation; or social security contributions.

Contributions to fringe benefit plans must be made regularly, e.g. daily, weekly, etc. They must be more frequent than quarterly. (see 29 CFR 5.5 (a)(1)(I)) A periodic bonus may not be counted as a fringe benefit.

4. Annualization of Benefit Costs

If a firm provides an electrician with $200 per month medical insurance, to calculate allowable fringe benefit credit contributions per hour, the formula ([$200 x 12 months] divided by 2080 hours = $1.15 per hour) should be used.

5. Proper Designation of Trade

A work classification on the wage decision for each worker must be made based on the actual type of work he/she performed and each worker must be paid no less than the wage rate on the wage decision for that classification **regardless** of his or her level of skill.

6. Split Classification

If a firm has employees that perform work in more than one classification, it can pay the wage rates specified for each classification ONLY if it maintains accurate time records showing the amount of time spent in each classification. If accurate time records are not maintained, these employees must be paid the highest wage rate of all the classifications of work performed by each worker. Accurate time records tracking how many hours a worker performed the work of one trade and then switched to another trade must be accounted for on a daily basis and reflected on Employer Certified Payroll accordingly.

WELDERS - Receive rate prescribed for craft performing operation to which welding is incidental.

==========

Unlisted classifications needed for work not included within the scope of the classifications listed may be added after award only as provided in the labor standards contract clauses (29CFR 5.5 (a) (1) (ii)).

In the listing above, the "SU" designation means that rates listed under the identifier do not reflect collectively bargained wage and fringe benefit rates. Other designations indicate unions whose rates have been determined to be prevailing.

WAGE DETERMINATION APPEALS PROCESS

1.) Has there been an initial decision in the matter? This can be:

* an existing published wage determination
* a survey underlying a wage determination
* a Wage and Hour Division letter setting forth a position on a wage determination matter
* a conformance (additional classification and rate) ruling

On survey related matters, initial contact, including requests for summaries of surveys, should be with the Wage and Hour Regional Office for the area in which the survey was conducted because those Regional Offices have responsibility for the Davis-Bacon survey program. If the response from this initial

contact is not satisfactory, then the process described in 2.) and 3.) should be followed.

With regard to any other matter not yet ripe for the formal process described here, initial contact should be with the Branch of Construction Wage Determinations. Write to:

Branch of Construction Wage Determinations
Wage and Hour Division
U.S. Department of Labor
200 Constitution Avenue, N.W.
Washington, DC 20210

2.) If the answer to the question in 1.) is yes, then an interested party (those affected by the action) can request review and reconsideration from the Wage and Hour Administrator (See 29 CFR Part 1.8 and 29 CFR Part 7). Write to:

Wage and Hour Administrator
U.S. Department of Labor
200 Constitution Avenue, N.W.
Washington, DC 20210

The request should be accompanied by a full statement of the interested party's position and by any information (wage payment data, project description, area practice material, etc.) that the requestor considers relevant to the issue.

3.) If the decision of the Administrator is not favorable, an interested party may appeal directly to the Administrative Review Board (formerly the Wage Appeals Board). Write to:

Administrative Review Board
U.S. Department of Labor
200 Constitution Avenue, N.W.
Washington, DC 20210

4.) All decisions by the Administrative Review Board are final.

==========

SPECIAL PROVISION To
Standard Specification Item 701S
Fencing (Version 09/26/12)

For this project Item 701S, Fencing (Version 09/26/12), of the City of Austin Standard Technical Specifications is hereby amended with respect to the clauses cited below. No other clauses or requirements of this Section of the City of Austin Standard Specifications are waived or changed.

Section 701S.3 Materials

Add the following paragraph:

"H. Polymer (PVC) Coated Fencing:

1. Polymer coated fencing is to include all fabric and components, except for barbed wire which is to be galvanized.
2. Chain Link Fabric: In addition to galvanize coating, steel fabric is to be polymer coated per ASTM F668, and the wire gauge specified is that of the metallic coated steel core wire. Polymer coating is to be Class 2b fused and adhered, black in color and in compliance with ASTM F934.
3. Polymer Coated Pipe for Fence and Gate Framework: Polymer coated pipe must have a PVC coating fused and adhered to the exterior zinc coating of the galvanized pipe in accordance with ASTM F1043. The minimum thickness of the PVC coating must be 10-mils (0.254 mm) per ASTM F934. Color to match fabric.
4. Polymer Coated Steel Tension Wire: 7 gauge (0.177 in.) (4.50 mm) wire complying with ASTM F1664. Wire gauge specified is the core wire gauge. Match coating class and color to that of the chain link fabric, Class 2b, fused and adhered.
5. Polymer Coated Color Fittings: In compliance with ASTM F626, PVC coating minimum thickness 0.006 in. (0.152 mm) fused and adhered to the zinc coated fittings. Match color to fabric.
6. Tie Wire and Hog Rings: Galvanized minimum zinc coating 1.20 oz/ft² (366 g/m²) 9 gauge (0.148) (3.76 mm) steel wire in compliance with ASTM F626, with polymer coating. Match the coating, class and color to that of the fence fabric.
7. Swing Gates: Polymer coated gate frames and gateposts; match the coating type and color to that specified for the fence framework. Moveable parts such as hinges, latches and drop rods may be field coated using a liquid polymer touch up approved by the PVC coating manufacturer.
8. Damaged PVC coatings are to be field coated using a liquid polymer touch up approved by the PVC coating manufacturer."

End

PART 1 - GENERAL

1.1 SUMMARY

A. This Section includes manufactured roof hatches that will be installed on a water tank. Hatches will be exposed to potable water that is disinfected with chlorine.

B. Related work: Specifications: 01300, 02221 and 05121.

1.2 SUBMITTALS

A. Product Data: For each product indicated.

B. Shop Drawings: Include plans, elevations, sections, details, and attachments to other Work.

C. Coordination Drawings: Roof plans drawn to scale and coordinating penetrations and roof-mounted items.

1.3 QUALITY ASSURANCE

Standards: Comply with the following:

NRCA's "Roofing and Waterproofing Manual" details for installing units.

PART 2 - PRODUCTS

2.1 ROOF HATCHES

A. Manufacturers: Subject to compliance with requirements, provide products by one of the following:

1. The Bilco Company

2. USF Fabrication

3. Halliday Products

4. Approved Equal

B. Cover must be ~~shall be 14 gauge (1.9mm)~~ Type 316 stainless steel with **sandblasted** finish, with ~~3" (76mm) beaded flange and~~ formed reinforcing members welded to support a minimum **load rating of 150 psf**. **Hatch cover must incorporate a minimum 2-inch overhang as required by TAC Chapter 290.** ~~Insulation shall be glass fiber 1" (25.4mm) in thickness, fully covered and protected by a 22 gauge (.8mm) Type 304 stainless steel cover liner with sandblast finish.~~

C. Hatch frame must be **316** stainless steel as detailed in the structural design plans. Curb must be low profile type and be not more the 6-inches tall.

D. **The access door must be equipped with a 316 stainless steel slamlock with fixed exterior and interior handles and interior and exterior padlock staples. The door must have 316 stainless steel gas shocks to assist in opening the door and reducing the force during closing. A 316 stainless steel hold open arm with a secondary latch mechanism with push/pull handle must automatically keep the cover in its upright, open position. All hardware and hinges must be Type 316 stainless steel throughout.** ~~Scuttle shall be completely assembled with heavy pintle hinges, positive snap latch with turn handles, padlock hasps inside and outside, and a mechanically retained thermoplastic rubber gasket. Compression spring operators enclosed in telescopic tubes constructed of a reinforced nylon 6/6 based engineered composite material shall be provided for smooth easy and controlled door operation throughout the entire arc of opening and closing. Operation shall not be affected by temperature. Cover shall be equipped with an automatic hold-open arm complete with red vinyl grip handle.~~

E. Sloping Roofs: Where slope or roof deck exceeds 1/4” per foot (1:48), fabricate hatch curbs with height tapered to match slope to level tops of units.

F. Hatch must open to a 90-degree angle, minimum.

G. Hatch dimensions and hinge locations are to be as indicated in the project plans.

PART 3 - EXECUTION

3.1 INSTALLATION

A. Installation shall be in accordance with Manufacturer’s instructions. Manufacturer shall guarantee against defects in material or workmanship for a period of five years.

B. General: Coordinate installation of roof hatch with other construction to ensure that combined elements are waterproof and weather tight. Anchor roof accessories securely to supporting structural substrates so they are capable of withstanding lateral and thermal stresses, and inward and outward loading pressures.

C. Clean exposed surfaces according to manufacturer's written instructions. Touch up damaged metal coatings.

D. Any members showing rust shall be replaced.

PART 4 - MEASUREMENT AND PAYMENT

No separate measurement payment for work performed under this Section. Include cost of same in the CONTRACT price bid for the project of which this is a component part.

END

1.00 GENERAL

1.01 SCOPE

Provide all materials, parts, labor, and professional services to provide and install:

A. Ladder Fall Prevention System(s) on ladders as specified.

B. Confined space hoist system(s), including masts and sleeves as specified.

C. Guardrail safety gate(s).

D. Safety related signage.

1.02 REFERENCES

Occupational Safety and Health Administration (OSHA)

1.03 SYSTEM DESCRIPTION

A. Ladder Fall Prevention System – The complete system shall allow the worker to operate freely in a normal climbing position during ascent or descent. The device is to be installed in accordance with the manufacturer's instructions in such a manner to enable the worker to be attached to the device at all times during the climb without having to remove his hands from the ladder to operate the system effectively and to be able to easily pivot onto and off of work platforms or landings while safely attached to the device.

B. Confined Space Hoist System – The complete system shall allow the use of components, winches and/or lifeline systems. System must be compatible with OWNER'S hoist equipment.

1.04 SUBMITTALS

A. Ladder Fall Prevention System

1. Manufacturer's product data sheets.
2. Material list of products to be installed on project.
3. O&M Data for Product
4. Training Firm Information

B. Confined Space Hoist System

1. Manufacturer's product data sheets.
2. Material list of products to be installed on project.
3. O&M Data for Product

C. Safety Gates

1. Manufacturer's product data sheets.
2. Material list of products to be installed on project.

3. O&M Data for Product

D. Manufacturer's product data sheet for safety related signage.

2.00 PRODUCTS

2.01 LADDER FALL PREVENTION SYSTEM

A. System must attach to ladders as indicated in the plans.

B. The vertical lifeline (VLL) system shall be designed for a maximum of two users with each user having a maximum rated load of 331 pounds (150 kg), including any tools and equipment carried.

C. Standards

The fall prevention (VLL system) must comply with the following standards:

1. ANSI Z359.1-2007 Safety requirements for personal fall arrest systems, subsystems and components (relevant sections to a VLL)
2. ANSI Z359.6-2009 Specification and design requirements for active fall protection systems
3. EN 353-1:2014 Personal fall protection equipment – Guided type fall arresters including a rigid anchor line (all clauses including dynamic performance, cold condition, minimum distance fall-back, on a guide bracket, sideways fall and sideways leaning VLL)

D. Materials and Construction

1. The VLL shall be made of wire rope constructed from 316 grade stainless steel. The wire rope shall be of 5/16" (8 mm) diameter and 1 x 19 construction. Anchor brackets, e.g. top, wire guide, bottom brackets, shall be made from 316 grade stainless steel.
2. Top terminations shall be of a permanent construction, e.g. a swaged termination, made from 316 grade stainless steel.
3. U-bolt clamps shall not be used to form terminations in the VLL wire rope.
4. When attached to the VLL the carrier sleeve utilizing a star wheel design shall be capable of accompanying the user during upward and downward changes of position without requiring manual intervention, e.g. handling the carrier sleeve during the ascent and descent. The carrier sleeve shall be able to smoothly traverse the intermediate support brackets without the need to remove the wire rope from the support bracket.
5. The carrier sleeve shall be equipped with a function(s) to prevent incorrect orientation when being fitted or attached to the VLL (i.e. prevent the carrier sleeve being fitted upside down).
6. The carrier shall be removable at any point from the wire rope in the VLL system by at least two consecutive deliberate manual actions.
7. The connecting element(s) shall be permanently attached to the carrier sleeve.
8. Evidence of testing shall be for the complete VLL system and shall include the carrier sleeve, wire rope, top anchor(s), wire guide bracket(s) and bottom anchor bracket(s) including the tensioning arrangement.

9. The VLL system shall follow the climbing path without the user needing to detach and then re-attach whilst climbing the structure. The VLL shall be capable of negotiating bends, “tight spots”, and sudden changes in direction without compromising performance.
10. The VLL system shall provide a means of continuous fall protection. When attached to the wire rope the carrier sleeve shall be capable of accompanying the user during upward and downward changes in position without requiring manual intervention.
11. All brackets (e.g. top anchor, intermediate wire guide, bottom anchor) shall be manufactured from 316 grade stainless and shall be electro-polished for enhanced corrosion resistance.

E. Carrier Sleeve

1. Provide Owner with five carrier sleeves.
2. The carrier sleeve shall be capable of being attached and detached to and from the VLL while remaining attached to the climber’s harness. The carrier sleeve shall attach to the front of the user’s harness, connecting directly to the chest D-Ring on the harness using a connector provided as a permanent part of the carrier sleeve.
3. The carrier sleeve shall be constructed of corrosion resistant materials and be lightweight and easy to use. It shall create minimal resistance to movement when the user ascends and descends. The carrier sleeve shall operate to minimize arrest distance with a maximum of 39.4 inches (1 m) measured from the connector on the carrier sleeve.

F. Acceptable Manufacturer:

MSA Safety – Latchways Engineered Fall Protection

2.02 BODY HARNESSES

A. Provide Owner with two body harnesses, size Large.

B. Harness must be full body type.

C. Harness must meet ANSI A10.14 1991 and CSA Z259.10.

D. Harness shall be composed of a premium 1-3/4” Nylon webbing.

E. Strength of webbing must be at least 6,500 lbs.

F. All load bearing components shall be rated to 5,000 lbs. and made of drop forged plated steel.

G. Sliding back “D” ring on full body harness for fall arrest.

H. Belt shall be manufactured of two layers of 1-3/4” webbing with a 2” back support pad.

I. Front “D” ring on belt **and chest** must be provided for climbing with the ladder safety system.

J. Approved Manufacturers:

North Safety Products – Model Saf-T-Climb Full Body Combo Harness Series 730-201-XXX (or as otherwise selected by the OWNER)

2.03 LANYARDS

Provide two total, double (split) bungee cord type shock absorbing lanyards. Lanyard must be 4.5-feet long un-deployed, with 2-1/4-inch throat large rebar locking snap hooks on each lanyard.

2.04 CONFINED SPACE HOIST SYSTEM

A. Provide hoist systems as indicated in Schedule 3.04.B. and sleeves as indicated on the plans. Hoist Systems include, but are not limited to masts, sleeves, hoists, **brackets** and all support equipment as required to provide a complete and working system.

B. Two-Piece Adjustable Mast

1. Mast must be welded aluminum with 304 stainless steel block anchor.
2. Finish must be powder coated safety yellow.
3. Rated Capacity – 450 lbs with a minimum 4:1 safety factor
4. **Hoist must allow for 48-inch adjustable offset.**
5. Approved Manufacturer/Models:
   a. Miller DuraHoist™ – Model DH-23
   b. Miller Lower Mast Extension – Model DH-22/45

C. Hoist

1. Provide hoist with a minimum working capacity of 350 lbs.
2. Hoist must be compatible with submitted ~~hoist~~ **mast** system and provided by the ~~hoist~~ **mast** manufacturer, including all brackets and mounting hardware.
3. Hoist must be provided with 3/16” stainless steel cable.
4. Approved Manufacturer/Models:

   Miller **by Honeywell** - **8442** Manhandler® Hoist

D. Self-Retractable Lifelines

1. Provide self-retractable lifelines with Emergency Retrieval Hoist with each hoist system.

2. Materials:

a. Housing: Stainless Steel

b. Drum: Stainless Steel

c. Cable: Stainless Steel; cable length is to match hoist cable length.

3. Free Fall Distance – 24” max.

4. **Approved Manufacturers/Models:**

   Miller by Honeywell – Miller MightyEvac®

E. Floor Mounted Sleeve

1. Sleeves must be constructed of welded 304 stainless steel.
2. Thrust bearing materials must be high density polyethylene.
3. Minimum rated capacity: 450 lbs. working load limit with 4:1 design factor.
4. Provide manufacturer standard stainless steel dust cap for all sleeves.
5. Mast rotation: 360-degrees
6. Approved Manufacturers:

   Miller by Honeywell – Model DH-7SS

F. Wall Mounted Sleeve

1. Sleeves must be constructed of welded 304 stainless steel.
2. Thrust bearing materials must be high density polyethylene.
3. Minimum rated capacity: 450 lbs. working load limit with 4:1 design factor.
4. Provide manufacturer standard stainless steel dust cap for all sleeves.
5. Mast rotation: 360-degrees
6. Approved Manufacturers:

   Miller by Honeywell – Model DH-8SS

G. Confined Space Hoist Storage

1. Provide steel storage box on top of tank for storing safety hoist system including mast, lower mast extension and winch. Contractor must verify all equipment will fit in storage box prior to construction.
2. Box must be equipped with anti-slam lid and gasketed seal.
3. **Installation:**

   a. **Pedestal Second Floor: Install box on neoprene pads at location determined by the Owner.**

   b. **Top of Elevated Storage Tank: Storage box is to be placed on top of the elevated tank within the handrail. Contractor must submit fabrication drawings for welded steel standoffs to support the box at least 4" off the top of the tank roof. Box skids must be bolted to steel standoffs using stainless steel hardware.**

      Prepare and coat box in accordance with the exterior coating system for the tank per Specification 09871 "Potable Water Tank Recoating."

4. Approved Manufacturers/Models

   a. Knaack ~~– Model 60 JOBMASTER®~~

b. Approved Equal

2.05 SAFETY GATES

A. Gate must be 304 stainless steel or galvanized steel to match guardrail material with at least two stainless steel hinges that are spring loaded to close automatically. Hinge spring tension must be field adjustable.

B. Gates must be equipped with a kick plate and stop tab opposite of the hinge side to stop the gate at the guardrail post.

C. Mounting hardware must be 304 stainless steel or galvanized steel to match gate and guardrail material.

D. Gate to be sized as indicated on plans.

E. Approved Manufacturers:

1. FabEnCo – XL Series
2. Kee Safety, Inc.
3. Benko Products
4. Approved Equal

2.06 SAFETY RELATED SIGNAGE

1. Provide "Danger Fall Hazard Follow Written Instructions for use of this Ladder. Report any Unsafe Conditions" or similar signage on ladders requiring cable safety climb systems. Self-adhesive vinyl with minimum dimensions 10"H x 14"W.
2. Provide "Danger Follow Confined Space Entry Procedures Before Entering" or similar signage on all hatches. Provide 0.040" aluminum sign with 4.0 mil vinyl printing layer and 2.5 mil UV and moisture resistant laminate layer. Approximate Dimensions 10"H x 14"W. Mount signs next to all ladders with safety systems installed.
3. Sample taps must be labeled with 4 mil laminated vinyl labels with adhesive over 3 mm thick PVC backing for mounting. Sign dimensions to be approximately 3.5"Hx5"W. Letters are to be blue on a white background.

3.00 EXECUTION

3.01 TRAINING

Contractor shall provide fall prevention training to City of Austin personnel as part of the fall prevention system and devices for this project. This training shall be provided by a firm certified in fall prevention training. CONTRACTOR shall submit information on the training firm and training agenda for approval by the City of Austin prior to scheduling the training. The information shall be submitted before substantial completion of the project. Training shall be as scheduled by the City of Austin. This training shall be subsidiary to other bid items.

3.02 INSPECTION

A. All components, brackets, etc., shall be on-site to complete installation.

B. It must be verified that required products and components are stainless steel.

C. Determine products are new and undamaged.

3.03 INSTALLATION

A. The products must be installed in accordance with manufacturer's installation instructions by a competent person.

B. Ladder fall prevention systems must not be installed until all painting operations are completed.

3.04 SCHEDULES

A. Fall Prevention System Schedule

Ladder	Ladder Fall Prevention System Required
Pedestal Ladders	Yes
Access Tube Ladder	Yes
Tank Interior Ladder(s)	Yes

*List may not be all inclusive, coordinate with plans.

B. Hoist System Schedule

Hoist Location	Quantity	Cable Length
Exterior Top of Tank	1	65-feet
Pedestal Top Platform	1	100-feet
Pedestal 2nd Floor	**1**	**65-feet**

C. Confined Space Hoist Storage Box Schedule

Storage Box Location	**Quantity**	**Dimensions**
Exterior Top of Tank	**1**	**60"L x 24"W x 28.25"H**
Pedestal 2nd Floor	**1**	**60"L x 24"W x 28.25"H**

3.05 MEASUREMENT AND PAYMENT

No separate measurement payment for work performed under this Section. Include cost of same in the CONTRACT price bid for the project of which this is a component part.

END OF SECTION

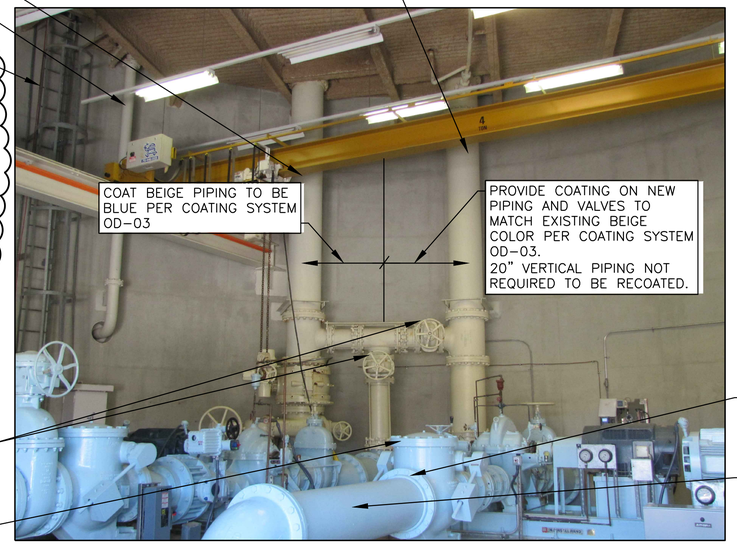

Addendum No. 1

1 FILL AND OVERFLOW PIPING
N.T.S

2 PIPE CHASE PIPING
N.T.S

3 PUMP SEAL DRAINS
N.T.S

NOTES:

1. ALL PHOTOS INCLUDED WITHIN THIS PLAN SET WERE TAKEN DURING DIFFERENT MONTHS IN 2015-2016 AND ARE A GENERAL REPRESENTATION OF THE SEVERITY OF CORROSION AND DAMAGE OBSERVED. ACTUAL CONDITIONS MAY BE DIFFERENT AT THE TIME OF CONSTRUCTION AND THE PHOTOS INCLUDED ARE NOT INTENDED TO IDENTIFY ALL AREAS OF CORROSION AND/OR DAMAGES THAT ARE IN NEED OR REPAIR. CONTRACTOR SHALL VERIFY ALL CONDITIONS AND MAKE ADJUSTMENTS AS REQUIRED.
2. WORK INDICATED IN THE PHOTOS IS NOT ALL INCLUSIVE OF THE WORK TO BE COMPLETED WITHIN THIS PROJECT.

Freese and Nichols, Inc.
Texas Registered Engineering Firm F-2144
STATE OF TEXAS
CHARLES A. KUCHERA
98388
LICENSED
PROFESSIONAL ENGINEER
10/17/16

FREESE AND NICHOLS
10431 Morado Circle, Suite 300
Austin, Texas 78759
Phone – (512) 617-3100
Fax – (512) 617-3101

THE CITY OF AUSTIN
FOUR POINTS ELEVATED RESERVOIR IMPROVEMENTS
1ST FLOOR INTERIOR PEDESTAL IMPROVEMENTS

NO.	ISSUE	BY	DATE
1	ADDENDUM NO. 1	CAK	10/17/2016

VERIFY SCALE Bar is one inch on original drawing. If not one inch on this sheet, adjust scale. 0 1

F&N JOB NO. AU116177
DATE 10/17/2016
DESIGNED REM
DRAWN JD
REVISED
CHECKED
FILE NAME WTU-4P-EST-DT01.dwg

SHEET G-2
SEQ.

REMOVE AND RELOCATE PEDESTAL LADDERS AND PLATFORMS. REMOVE LADDER CAGES, GRIND ALL WELDS SMOOTH. PROVIDE A MIN. 3 MIL PROFILE ON LADDER RUNGS AND APPLY COLD GALVANIZING. (ABRASIVE BLASTING WILL NOT BE ALLOWED) INSTALL PROPOSED LADDER SAFETY SYSTEM. REFER TO STRUCTURAL. 1

COAT STEEL PIPING AT SECOND FLOOR CONNECTION TO DUCTILE IRON PIPING PER COATING SYSTEM OD-02. COATING BITUMINOUS COATED DUCTILE IRON PIPING IS NOT REQUIRED. INSTALL GASKETS, FLANGE ISOLATION KITS AND REPLACE ALL CONNECTION HARDWARE, 3-PLCS.

1 PEDESTAL 2ND FLOOR

N.T.S

Addendum No. 1

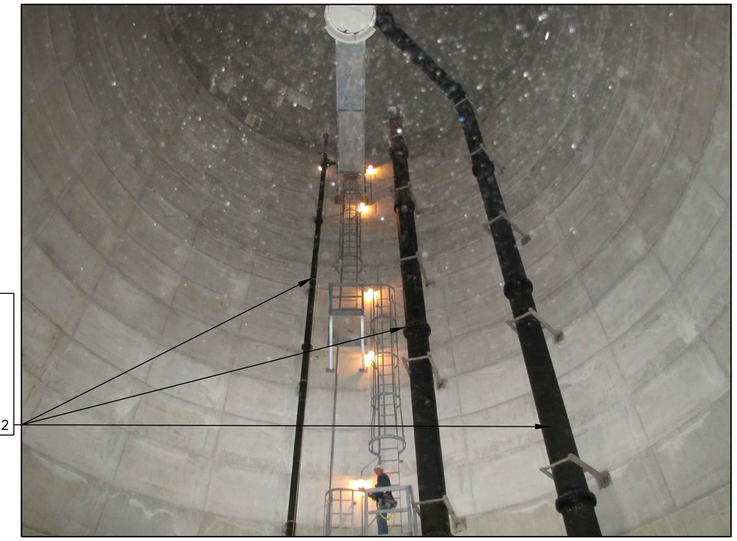

2 PEDESTAL PIPING

N.T.S

3 PEDESTAL UPPER PLATFORM/DRY WELL

N.T.S

4 TANK BOWL BOTTOM ACCESS HATCH

N.T.S

NOTES:

1. ALL PHOTOS INCLUDED WITHIN THIS PLAN SET WERE TAKEN DURING DIFFERENT MONTHS IN 2015-2016 AND ARE A GENERAL REPRESENTATION OF THE SEVERITY OF CORROSION AND DAMAGE OBSERVED. ACTUAL CONDITIONS MAY BE DIFFERENT AT THE TIME OF CONSTRUCTION AND THE PHOTOS INCLUDED ARE NOT INTENDED TO IDENTIFY ALL AREAS OF CORROSION AND/OR DAMAGES THAT ARE IN NEED OR REPAIR. CONTRACTOR SHALL VERIFY ALL CONDITIONS AND MAKE ADJUSTMENTS AS REQUIRED.
2. WORK INDICATED IN THE PHOTOS IS NOT ALL INCLUSIVE OF THE WORK TO BE COMPLETED WITHIN THIS PROJECT.

Freese and Nichols, Inc.
Texas Registered Engineering Firm F-2144

STATE OF TEXAS
CHARLES A. KUCHERA
98388
LICENSED
PROFESSIONAL ENGINEER
10/17/16

FREESE AND NICHOLS
10431 Morado Circle, Suite 300
Austin, Texas 78759
Phone – (512) 617-3100
Fax – (512) 617-3101

THE CITY OF AUSTIN
FOUR POINTS ELEVATED RESERVOIR IMPROVEMENTS
INTERIOR PEDESTAL IMPROVEMENTS

NO.	ISSUE	BY	DATE
1	ADDENDUM NO. 1	CAK	10/17/2016

VERIFY SCALE Bar is one inch on original drawing. If not one inch on this sheet, adjust scale. 0 1

F&N JOB NO. AU116177
DATE 10/17/2016
DESIGNED REM
DRAWN JD
REVISED
CHECKED
FILE NAME WTU-4P-EST-DT01.dwg

SHEET G-3
SEQ.

STRUCTURAL GENERAL NOTES

THESE GENERAL NOTES SHALL APPLY UNLESS OTHERWISE SPECIFICALLY NOTED ON PLANS AND DETAILS. THE CONTRACTOR SHALL VERIFY ALL DIMENSIONS BEFORE STARTING WORK. THE ENGINEER SHALL BE NOTIFIED OF ANY DISCREPANCIES PRIOR TO CONSTRUCTION. DESIGN, CONSTRUCTION, WORKMANSHIP AND MATERIALS SHALL COMPLY WITH THE IBC 2012, AWWA D100 AND AWWA D107, AND CURRENT OSHA LAW AND REGULATIONS.

1. NEW AND EXISTING ITEMS SHOWN ARE LAYED OUT SCHEMATICALLY BASED ON PROXIMITY TO EXISTING STRUCTURE. EXACT SIZE AND LOCATION OF EXISTING STRUCTURES SHALL BE VERIFIED BY CONTRACTOR. INFORMATION FOR DRAWINGS WAS OBTAINED FROM RECORD DRAWINGS (URBAN ENGINEERING GROUP, INC.–1987) AND FIELD OBSERVATIONS CONDUCTED IN DECEMBER 2011, JANUARY 2012, AND FEBRUARY 2016.
2. THE STRUCTURAL DRAWINGS ARE NOT TO BE SCALED FOR DETERMINATION OF QUANTITIES, LENGTHS, OR FIT OF MATERIALS.
3. THE STRUCTURAL DRAWINGS REPRESENT THE FINISHED STRUCTURE. THEY DO NOT INDICATE THE METHODS OF CONSTRUCTION UNLESS SO STATED OR NOTED. THE CONTRACTOR SHALL PROVIDE ALL MEASURES NECESSARY TO PROTECT THE WORKMEN AND ALL OTHER PERSONS DURING CONSTRUCTION.
4. THE CONTRACTOR SHALL PROVIDE TEMPORARY BRACING AND SHORING OF ALL STRUCTURAL WORK AS REQUIRED FOR STABILITY OF THE STRUCTURE DURING ALL PHASES OF CONSTRUCTION. THE CONTRACTOR SHALL IMMEDIATELY NOTIFY THE ENGINEER OF ANY CONDITION WHICH, IN HIS/HER OPINION, MIGHT ENDANGER THE STABILITY OF THE STRUCTURE OR CAUSE DISTRESS IN THE STRUCTURE.
5. ALL EXISTING CONDITIONS AND DIMENSIONS SHALL BE FIELD VERIFIED PRIOR TO PREPARATION OF SHOP DRAWINGS AND THE BEGINNING OF THE CONSTRUCTION PROCESS.

DESIGN CRITERIA

1. LOADS :
   STRUCTURE SELF–WEIGHT INCLUDED AS DEADLOAD FOR ALL LOCATIONS.

   ROOF LEVEL :
   LIVE LOADS.....20 PSF
2. GRATING PLATFORM :
   LIVE LOADS.....100 PSF
3. FOUNDATION :
   A CURRENT GEOTECHNICAL INVESTIGATION AND SOIL REPORT ARE NOT AVAILABLE FOR THE PROJECT. BUILDING CODES (SUBJECT TO APPROVAL OF THE BUILDING OFFICIAL IN JURISDICTION) PERMITS THE USE OF PRESUMPTIVE LOAD–BEARING VALUES (REF. IBC 2012 TABLE 1806.2). THESE PRESUMPTIVE VALUES HAVE BEEN USED UNLESS NOTED OTHERWISE. WHEN REQUIRED, IT IS THE RESPONSIBILITY OF OF THE OWNER TO OBTAIN A SOIL REPORT BASED ON GEOTECHNICAL INVESTIGATION SPECIFIC FOR THIS PROJECT. SPECIAL INSPECTION MAY BE REQUIRED TO VERIFY BEARING CAPACITY OF EXISTING SOIL AT NEW SLAB–ON–GRADE OR FOOTING SUBGRADE. FOUNDATION EXCAVATIONS SHALL BE INSPECTED BY A COMPETENT SOIL ENGINEER OR OWNER REPRESENTATIVE PRIOR TO PLACEMENT OF CONCRETE. CONTRACTOR SHALL BE RESPONSIBLE FOR PREPARING SUBGRADE TO MEET MINIMUM SOIL BEARING PRESSURE VALUES AND COMPACTION REQUIREMENTS. SOIL SELECT BACKFILL OR BORROW MATERIAL PER C.O.A. STANDARD SPECIFICATION 510S. COMPACT BACKFILL MATERIAL TO 95% RELATIVE MAXIMUM DENSITY PER C.O.A. APPROVED TEST METHOD. PREPARE NEW FOOTING SUBGRADE PER C.O.A. STANDARD SPECIFICATION 201S.

   DESIGN SOIL BEARING PRESSURES :
   AT VAULT.....1500 PSF
   AT SPLASH WALLS.....1500 PSF

STRUCTURAL STEEL

1. STRUCTURAL STEEL SHALL CONFORM TO THE AMERICAN INSTITUTE OF STEEL CONSTRUCTION'S CURRENT STANDARDS FOR STEEL CONSTRUCTION.
2. CARBON STEEL PLATES SHAPES, AND PIPE SHALL MEET THE REQUIREMENTS OF ASTM A36. Addendum No. 1
3. STAINLESS STEEL PLATE SHALL MEET THE REQUIREMENTS OF ASTM A666, TYPE 304(L) OR 316(L) AS NOTED. STAINLESS BARS AND SHAPES SHALL MEET ASTM A276, TYPE 304(L) OR 316(L) AS NOTED. STAINLESS PIPE SHALL MEET ASTM A312, TYPE 304(L) OR 316(L) AS NOTED.
4. REFER TO SPECIFICATIONS FOR PREPARATION OF ALL STEEL SURFACES PRIOR TO COATING.
5. WELDING OF STRUCTURAL STEEL SHALL BE CONDUCTED IN ACCORDANCE WITH THE WELDING SPECIFICATION SECTION, 05121. ADDITIONAL REFERENCES INCLUDE AWWA D–100, AWWA D107 API STANDARD 650, AND API STANDARD 653 FOR ALTERATIONS OF STEEL TANKS.
6. WELDING ELECTRODES SHALL BE AS FOLLOWS:

STEEL WELDING ELECTRODE SCHEDULE	
MATERIAL	ELECTRODE TYPE
CARBON STEEL TO CARBON STEEL	AWS E–7018
AISI 304L TO CARBON STEEL	AWS E–309–Cb
AISI 304L TO AISI 304L	AWS E–308L
AISI 316L TO CARBON STEEL	AWS E–310–Mo
AISI 316L TO AISI 316L	AWS E–316L

7. CONTRACTOR SHALL REVIEW SHOP AND FIELD WELD REQUIREMENTS FOR COMPATIBILITY WITH THE CONSTRUCTION SEQUENCE PRIOR TO SHOP DRAWING SUBMITTAL. PROPOSED REVISIONS SHALL BE IDENTIFIED BY THE CONTRACTOR AND CLEARLY SHOWN ON THE SHOP DRAWINGS.
8. THE CONTRACTOR SHALL BE RESPONSIBLE FOR DEVELOPING A PROCEDURE THAT WILL CONTROL DISTORTION CAUSED BY WELDING AND/OR THERMAL CUTTING.
9. EXISTING SURFACES TO BE WELDED SHALL BE CLEANED OF ALL FOREIGN DEBRIS PRIOR TO WELDING.
10. ALL CONTINUOUS WELDS SHALL BE INTERMITTENT CHAIN WELDS TO PREVENT DISTORTION.
11. STAINLESS STEEL PIPE RAILING SHALL BE TYPE 316L, U.N.O., AND SHALL CONFORM TO SPECIFICATIONS AND OSHA STANDARD REGULATION 1910.23. DESIGN PARAMETERS INCLUDE:
    A. RAILINGS SHALL HAVE AN OUTSIDE DIAMETER OF 2".
    B. POSTS SHALL BE SPACED NO MORE THAN 8'–0" APART.
    C. RAILS, BETWEEN POSTS, SHALL BE CURVED TO MATCH THE RADIUS SHOWN ON THE STRUCTURAL PLANS, OR MEASURED IN THE FIELD.
    D. TOP RAILS SHALL BE CONTINUOUS WITH AN UNINTERRUPTED TOP SURFACE.
    E. HEIGHT OF RAILING SHALL BE 3'–6" FROM THE TOP OF ROOF SURFACE OR TOP OF GRATING TO THE TOP OF THE TOP RAIL.
    F. THE INTERMEDIATE RAIL SHALL BE APPROXIMATELY HALF–WAY BETWEEN THE TOP RAIL AND FLOOR SURFACE.
    G. A STANDARD TOEBOARD (KICK PLATE) SHALL HAVE A 4" NOMINAL HEIGHT, CLEAR THE FLOOR SURFACE BY 1/4" MAXIMUM AND CAN BE STRAIGHT SEGMENTS BETWEEN POSTS.
    H. RAILINGS AND POSTS SHALL BE DESIGNED TO WITHSTAND A 200 POUND CONCENTRATED LOAD IN ANY DIRECTION.
    I. POSTS AND RAILINGS SHALL BE SHOP WELDED AND MITERED BY THE MANUFACTURER. ALL CUTS (JOINTS) SHALL BE GROUND SMOOTH.
    J. CONTINUOUS RAILING RUNS OF 40'–0" OR MORE SHALL HAVE A MAXIMUM EXPANSION JOINT SPACING OF 24'–0". EXPANSION JOINTS SHALL OCCUR 6" FROM A POST. REF. DETAIL 206A.
12. ALL BOLTS, WASHERS, & NUTS TO BE STAINLESS STEEL TYPE 316L, UNLESS NOTED OTHERWISE
13. ALL NEW STEEL MEMBERS INSTALLED INSIDE THE WATER–CONTAINING CHAMBER OF THE RESERVOIR SHALL BE 316L STAINLESS STEEL.

STANDARD AND CODE NOTES

1. PENETRATIONS THROUGH THE EXISTING TANK WALLS / STRUCTURE SHALL COMPLY TO API STANDARD 650 AND 653 – TANK INSPECTION, ALTERATION AND RECONSTRUCTION, AS WELL AS THE PROJECT MANUAL.

DEMOLITION NOTES

1. REFER TO THE BID DOCUMENTS AND SPECIFICATIONS FOR THE EXTENT OF DEMOLITION FOR THE PROJECT.

POST–INSTALLED ANCHORS

1. POST–INSTALLED ANCHORS SHALL ONLY BE USED WHERE SPECIFIED ON THE CONSTRUCTION DOCUMENTS. CARE SHALL BE TAKEN IN PLACING POST–INSTALLED ANCHORS TO AVOID CONFLICTS WITH EXISTING REBAR. HOLES SHALL BE DRILLED AND CLEANED IN ACCORDANCE WITH THE MANUFACTURER'S WRITTEN INSTRUCTIONS. SUBSTITUTION REQUEST FOR PRODUCTS OTHER THAN THOSE SPECIFIED BELOW SHALL BE SUBMITTED BY THE CONTRACTOR TO THE ENGINEER–OF–RECORD ALONG WITH CALCULATIONS THAT ARE PREPARED & SEALED BY A REGISTERED PROFESSIONAL ENGINEER LICENSED IN THE STAE OF TEXAS. THE CALCULATIONS SHALL DEMONSTRATE THAT THE SUBSTITUTED PRODUCT IS CAPABLE OF ACHIEVING THE PERTINENT EQUIVALENT PERFORMANCE VALUES (MINIMUM) OF THE SPECIFIED PRODUCT USING THE APPROPRIATE DESIGN PROCEDURE AND/OR STANDARD(S) AS REQUIRED BY THE BUILDING CODE. PROVIDE CONTINUOUS SPECIAL INSPECTION FOR ALL MECHANICAL & ADHESIVE ANCHORS PER THE APPLICABLE EVALUATION REPORT. CONTACT MANUFACTURER'S REPRESENTATIVE FOR THE INITIAL TRAINING AND INSTALLATION OF ANCHORS AND FOR PRODUCT RELATED QUESTIONS AND AVAILABILITY. CALL SIMPSON STRONG–TIE AT (800) 999–5099.

   A. CONCRETE ANCHORS

      i. MECHANICAL ANCHORS SHALL HAVE BEEN TESTED AND QUALIFIED FOR USE IN ACCORDANCE WITH ACI 355.2 AND ICC–ES AC193 FOR CRACKED AND UNCRACKED CONCRETE RECOGNITION. PRE–APPROVED MECHANICAL ANCHORS INCLUDE:

         (1) SIMPSON STRONG–TIE "TITEN–HD" AND "TITEN–HD ROD HANGER" (ICC–ES ESR–2713)
         (2) SIMPSON STRONG–TIE "STRONG–BOLT" (ICC–ES ESR–1771)
         (3) SIMPSON STRONG–TIE "STRONG–BOLT 2" (ICC–ES ESR–3037)

      ii. ADHESIVE ANCHORS SHALL HAVE BEEN TESTED AND QUALIFIED FOR USE IN ACCORDANCE WITH ACI 355.4 AND ICC–ES AC308 FOR CRACKED AND UNCRACKED CONCRETE RECOGNITION. PRE–APPROVED ADHESIVE ANCHORS INCLUDE:

         (1) SIMPSON STRONG–TIE "SET–XP" (ICC–ES ESR–2508)
         NOTE : ADHESIVE RETAINING CAP (ARC) REQUIRED FOR HORIZONTAL INSTALLATIONS.

CONCRETE NOTES

1. CONCRETE WORK SHALL CONFORM TO THE AMERICAN CONCRETE INSTITUTE (ACI) SPECIFICATION, ACI #301 BUILDING CODE REQUIREMENTS, ACI #318, LATEST EDITION, FOR BUILDING STRUCTURES & BUILDING CODE REQUIREMENTS, ACI #350–06, OR ENVIRONMENTAL STRUCTURES.
2. DETAILING, FABRICATION AND ERECTION OF REINFORCING BARS, UNLESS OTHERWISE NOTED, MUST FOLLOW THE ACI "MANUAL OF STANDARD PRACTICE FOR DETAILING REINFORCED CONCRETE", ACI #315, LATEST EDITION.
3. UNLESS SHOWN OTHERWISE IN THE SPECIFICATIONS, CONCRETE SHALL BE C.O.A. CLASS 'S' CONCRETE WITH 4000 PSI MINIMUM COMPRESSIVE STRENGTH AT 28 DAYS. ALSO REFER TO C.O.A. SPECIFICATIONS FOR ADDITIONAL CONCRETE MIX DESIGN REQUIREMENTS.
4. ACCESSORIES SHALL BE IN ACCORDANCE WITH THE ACI "MANUAL OF STANDARD PRACTICE FOR DETAILING REINFORCED CONCRETE", ACI #315, LATEST EDITION. ACCESSORIES FOR INTERIOR CONCRETE SURFACES EXPOSED TO VIEW SHALL HAVE PLASTIC COATED FEET. ACCESSORIES FOR CONCRETE SURFACES EXPOSED TO EARTH, WEATHER, WATER, OR HIGH HUMIDITY SHALL BE FABRICATED OF STAINLESS STEEL OR PLASTIC. PROVIDE BOLSTERS AT SUSPENDED SLABS, WALLS AND WIDE BEAMS. PROVIDE STANDEES AT ALL SLABS WITH TWO LAYERS OF REINFORCING. FOR SLAB–ON–GRADE REINFORCING, PROVIDE CHAIRS MANUFACTURED FROM HOT–DIPPED GALVANIZED STEEL, STAINLESS STEEL, PLASTIC, OR PRECAST CONCRETE BLOCKS OF EQUAL OR GREATER COMPRESSIVE STRENGTH AS THE CONCRETE BEING POURED.
5. CONCRETE PLACED BY PUMPING SHALL MEET THE FOLLOWING REQUIREMENTS:
   a. COARSE AGGREGATE (AGG) SHALL BE GRADED FROM A MAXIMUM OF 1 1/2".
   b. MAXIMUM ALLOWABLE INCREASE IN CEMENT FACTOR SHALL BE 1/2 SACK PER CUBIC YARD OVER NORMAL MIX DESIGN.
   c. MAXIMUM WATER CEMENT RATIO WILL CONFORM TO REQUIREMENTS STATED IN THE PROJECT SPECIFICATIONS. IF MORE WORKABILITY IS REQUIRED, AN APPROVED ADMIXTURE MAY BE USED. SEE CONCRETE ADMIXTURE SECTION 405S OF THE SPECIFICATION FOR REQUIREMENTS.
   d. MAXIMUM WEIGHT RATIO OF FINE AGGREGATES TO COARSE AGGREGATES (AGG) SHALL NOT EXCEED 2/3.
   e. REFER TO ACI 301, LATEST EDITION, SECTION 800, FOR OTHER PUMPING REQUIREMENTS.
   f. IN NO CASE SHALL CONCRETE BE PUMPED THROUGH AN ALUMINUM TUBE.
6. REINFORCING BARS SHALL BE NEW BILLET STEEL CONFORMING TO ASTM SPECIFICATION A615, GRADE 60.
7. STANDARD PROTECTIVE COVER OF REINFORCING BARS UNLESS OTHERWISE NOTED SHALL BE:

   WHERE CAST AGAINST EARTH OR FILL ..... 3 IN.
   EXPOSED TO EARTH, WATER
   OR WEATHER ..... 2 IN.
   SLABS AND WALLS ..... 2 IN.
   OTHER ..... 2 IN.
8. BARS SCHEDULED AND DETAILED "CONT" SHALL BE LAPPED 30 BAR DIAMETERS UNLESS OTHERWISE NOTED.
9. MAINTAIN A MINIMUM OF ONE BAR DIAMETER (BUT NOT LESS THAN 1") BETWEEN ALL REINFORCING BARS (INCLUDING LAPS) ON ALL SLABS. AND A MINIMUM OF 1–1/2 TIMES THE MAXIMUM COARSE AGGREGATE SIZE IN ALL CASES.
10. SHOP DRAWINGS SHALL BE PREPARED FOR ALL REINFORCING STEEL AND SUBMITTED FOR REVIEW BY ENGINEER. ENGINEERING DRAWINGS SHALL NOT BE REPRODUCED AND USED AS SHOP DRAWINGS.
11. VERTICAL CONSTRUCTION JOINTS IN FLOOR OR ROOF SLABS ARE TO BE AS SHOWN ON PLANS. NO HORIZONTAL JOINTS WILL BE PERMITTED IN SLABS UNLESS OTHERWISE NOTED.
12. WELDING OF REINFORCING BARS SHALL NOT BE PERMITTED, UNLESS APPROVED BY ENGINEER.
13. DURING PLACEMENT OF CONCRETE, USE TREMIE OR OTHER MEANS TO LIMIT FREE–FALL OF CONCRETE TO 5'–0".
14. NOT USED.
15. AT ALL OPENINGS OR PENETRATIONS THRU CONCRETE WALLS OR SLABS, PROVIDE ADDITIONAL REINFORCINGS ADJACENT TO THE OPENINGS PER TYPICAL DETAIL 4&5/S1.7, UNO.
16. ALL EXPOSED CONCRETE CORNERS SHALL HAVE A 3/4" CHAMFER U.N.O.

MONOLITHIC DRAWINGS

1. CONTRACTOR MUST SUBMIT MONOLITHIC DRAWINGS FOR ALL CONCRETE WORK, IN 2D OR ISOMETRIC. EACH DRAWING SHALL CLEARLY IDENTIFY, LOCATE AND DIMENSION THE FOLLOWING:
   A. CONTROL, CONSTRUCTION, CONTRACTION AND EXPANSION JOINTS, AS DERIVED FROM THE DIRECTIONS IN CONTROL JOINT NOTES.
      ALL JOINTS ADDED, DELETED OR MOVED FROM THE DESIGN DRAWINGS SHALL BE CLEARLY IDENTIFIED.
   B. ALL REBAR LAYOUTS ASSOCIATED WITH JOINT LOCATIONS.
   C. EMBED ITEMS.
   D. ALL CONCRETE PENETRATIONS.
   E. WATERSTOPS.
   F. KEY ELEVATIONS.
   G. ELECTRICAL CONDUIT.
   H. ALL OTHER ITEMS LOCATED IN OR PASSING THROUGH THE CONCRETE.

ANTI–CORROSION COATING NOTES

1. ALL SURFACES OF EXISTING CONCRETE THAT ARE NEWLY EXPOSED BY WIRE CUTTING, SAWCUTTING, OR CORE–DRILLING SHALL BE COATED WITH TWO COATS OF SIKA ARMATEC 110 EPOCEM AS MANUFACTURED BY SIKA CORPORATION (OR AN APPROVED EQUAL), UNLESS NOTED OTHERWISE.
2. BEFORE COATING CONCRETE, BURN BACK ALL EXIST REINF EXPOSED BY CUTTING TO A MIN DEPTH OF 1 1/2". GROUT HOLES WITH A CORROSION INHIBITING REPAIR MORTAR SUCH AS "SIKATOP 111 PLUS" AS MANUFACTURED BY SIKA CORPORATION (OR AN APPROVED EQUAL). PREPARE, APPLY, AND CURE MORTAR PER MFR'S PUBLISHED GUILDLINES.
3. APPLY PRODUCT AS AN ANTI–CORROSION COATING PER THE MANUFACTURER'S PUBLISHED GUIDELINES.
4. TWO COATS OF 20 MILS THICKNESS SHALL RESULT IN A FINAL COATING WITH A MINIMUM THICKNESS OF 40 MILS.

SELF–EXPANDING STRIP WATERSTOP NOTES

1. SELF–EXPANDING STRIP WATERSTOP SHALL BE MANUFACTURED RECTANGULAR OR TRAPEZOIDAL STRIP, BENTONITE–FREE, HYDROPHILIC MATERIAL FOR ADHESIVE BONDING TO CONCRETE. THESE WATERSTOPS SHALL BE MANUFACTURED FROM HYDRO–EXPANSIVE RUBBER WITH A MINIMUM EXPANSION CAPABILITY OF 200–PERCENT OF ITS ORIGINAL VOLUME AFTER IMMERSION IN WATER.
2. INSTALL AT CONSTRUCTION JOINTS AND AT OTHER LOCATIONS INDICATED, ACCORDING TO THE MANUFACTURER'S WRITTEN INSTRUCTIONS, BONDING OR MECHANICALLY FASTENING AND FIRMLY PRESSING INTO PLACE.
3. INSTALL IN THE LONGEST LENGTHS PRACTICAL.
4. CONCRETE SURFACES LEFT ROUGH BY JACK HAMMERING, EXTENSIVE WEATHERING, OR IRREGULAR FORM WORK SHALL BE BROUGHT TO A SMOOTH & LEVEL CONDITION PER THE MFR'S PUBLISHED INSTALLATION GUIDELINES.
5. PROVIDE ONE OF THE FOLLOWING PRODUCTS:
   a. SWELLSEAL JOINT; DE NEEF CONSTRUCTION CHEMICALS (U.S) INC
   b. HYDROTITE CJ PROFILE; GREENSTREAK
   c. ADEKA ULTRA SEAL MC–2010MN; MITSUBISHI INTERNATIONAL CORP
   d. APPROVED EQUAL

RECTANGULAR BAR GRATING

1. UNLESS OTHERWISE NOTED OR APPROVED, NEW GRATING SHALL BE AS FOLLOWS. GRATING AT THE INTERIOR OF THE RESERVOIR (WET SIDE) SHALL BE TYPE 316 STAINLESS STEEL. SITE GRATING AND OTHER LOCATIONS SHALL BE GALVANIZED.

LOCATION	GRATING
CROWS NEST	McNICHOLS TYPE GW–2, 1" x 3/16" @ 1 3/16" O.C.
PRV VAULT	McNICHOLS TYPE GW–2, 1 1/2" x 3/16" @ 1 3/16" O.C.
REST PLATFORMS	McNICHOLS TYPE GW–2, 1 1/4" x 3/16" @ 1 3/16" O.C.
CATWALK PLATFORMS	McNICHOLS TYPE GW–2, 1 1/4" x 3/16" @ 1 3/16" O.C.
PEDESTRIAN BRIDGE	McNICHOLS TYPE GW–2, 1" x 1/8" @ 1 3/16" O.C.

2. ALL GRATINGS SHALL COMPLY WITH THE ANSI / NAAMM METAL BAR GRATING MANUAL MBG 531, LATEST EDITION.
3. GRATINGS SHALL BE PRESSURE–LOCKED, FABRICATED BY PRESSING RECTANGULAR FLUSH–TOP CROSSBARS INTO SLOTTED BEARING BARS OR BY SWAGING CROSSBARS BETWEEN BEARING BARS.
4. BAR GRATINGS ARE DESIGNED TO SUPPORT A UNIFORM LIVE LOAD OF 150 PSF WITH A MAXIMUM DEFLECTION OF L/240 OR ¼ INCH, WHICHEVER IS LESS. SUBMIT MANUFACTURER'S PUBLISHED LOAD TABLES AND ANALYSIS DATA TO SHOW THAT THE PROPOSED GRATINGS MEET THE DESIGN REQUIREMENTS.
5. ALL CUTOUT OPENINGS FOR GATE OPERATOR SUPPORT BRACKETS, PIPE PENETRATIONS, OR CONDUIT PENETRATIONS SHALL BE LOAD BANDED. THE CUTOUT SIZES & LOCATIONS SHALL BE FULLY COORDINATED AND DOCUMENTED BY THE GRATING SHOP DRAWING SUBMITTAL. ALL CUTOUT AND BANDING FABRICATION SHALL BE PERFORMED IN THE SHOP.
6. SECURELY FASTEN GRATING SECTIONS WITH REMOVABLE SS SADDLE CLIPS IN ACCORDANCE WITH THE MANUFACTURER'S PUBLISHED GUIDELINES. CLIPS SHALL BE DESIGNED AND FABRICATED TO FIT OVER TWO BEARING BARS. PROVIDE NO FEWER THAN FOUR SADDLE CLIPS FOR EACH GRATING SECTION.

STEEL PIPE AND FITTINGS

1. UNLESS NOTED OTHERWISE IN THE CONSTRUCTION DOCUMENTS, ALL SPECIALS AND FITTINGS SHALL CONFORM TO THE DIMENSIONS OF AWWA C208. PIPE MATERIAL AND FITTINGS SHALL BE OF THE SAME MATERIAL AND PRESSURE CLASS OF THE ADJOINING PIPE. THE MINIMUM RADIUS OF ELBOWS SHALL BE 2½ TIMES THE PIPE DIAMETER, AND THE MAXIMUM MITER ANGLE ON EACH SECTION SHALL NOT EXCEED 11¼ DEGREES (ONE CUT ELBOW UP TO 22½ DEGREES).

LOCATION OF DETAILS

DETAILS	SHEET	DESCRIPTION
01–07	S1.3	TYPICAL DETAILS
101–106	S4.1	SITE DETAILS
201–206A	S5.1	LADDER, GRATING, DETAILS SHEET 1 OF 4
207–215	S5.2	LADDER, GRATING, DETAILS SHEET 2 OF 4
217–220	S5.3	LADDER, GRATING, DETAILS SHEET 3 OF 4
221–222	S5.4	LADDER, GRATING, DETAILS SHEET 4 OF 4
301–309	S6.1	MISC. TANK DETAILS SHEET 1 OF 2
310–312	S6.2	MISC. TANK DETAILS SHEET 2 OF 2

JOSE I. GUERRA, INC.
Texas Registered Engineering Firm F–3

KENNETH W. HANKS
97528
LICENSED PROFESSIONAL ENGINEER
10/17/16

FREESE AND NICHOLS
10431 Morado Circle, Suite 300
Austin, Texas 78759
Phone – (512) 617–3100
Fax – (512) 617–3101
Freese and Nichols, Inc.
Texas Registered Engineering Firm F–2144

Jose I. Guerra, Inc.
Consulting Engineers
8000 N. Mopac Expy, Suite 210
Austin, Texas 78759
(512) 345–2090
Structural • Civil • Mechanical • Electrical

THE CITY OF AUSTIN
FOUR POINT ELEVATED RESERVOIR IMPROVEMENTS
STRUCTURAL
GENERAL NOTES

F&N JOB NO.	AU116177
DATE	08/15/16
DESIGNED	BB
DRAWN	RH
REVISED	RH
CHECKED	BB
FILE NAME	S1.1.dwg

NO.	ISSUE	BY	DATE
1	ADDENDUM #1	KWH	10/17/16

VERIFY SCALE Bar is one inch on original drawing. If not one inch on this sheet, adjust scale.

SHEET S1.1

SEQ. –

ACAD Rel 18.2s (LMS Tech) User: 02160
CSAM12 v18.2b (LMS Tech) J:\USERS\02160\DESKTOP\AUSTIN\34BORDER.DWG LAYOUT: Model
09/17/2012 1:16:53 P.M. LTSC: 1 PSLTS: 1

CONCRETE GROUT NOTES

1. MATERIALS DESIGNATED ON DRAWINGS AS "LEAN CONCRETE" AND, "GROUT TOPPING", ETC. SHALL BE CONCRETE GROUT CONFORMING TO THE FOLLOWING REQUIREMENTS:
2. THE CONCRETE GROUT SHALL CONTAIN CEMENT, POZZOLAN, COARSE AND FINE AGGREGATES, WATER AND WATER REDUCING ADMIX PROPORTIONED TO ACHIEVE A COMPRESSIVE STRENGTH OF 4000 PSI MINIMUM AT 28 DAYS, WITH A WORKABLE SLUMP NOT TO EXCEED 5"
3. THE COARSE AGGREGATE SHALL BE 3/8" MAXIMUM.
4. THIN GROUTS (3" THICKNESS OR LESS) SHALL BE REINFORCED WITH SYNTHETIC REINFORCING FIBERS, NYCON–PVA RECS15, AS MANUFACTURED BY "NYCON", OR APPROVED EQUAL, APPLIED AT THE RATE OF 3 LBS. OF FIBER PER CUBIC YARD OF GROUT, AND COMPLETELY DISPERSED EVENLY WITHIN THE GROUT.

Addendum No. 1

ABBREVIATIONS

A.B.	ANCHOR BOLT
ADDL	ADDITIONAL
A.F.F.	ABOVE FINISH FLOOR
AL	ALUMINUM
ALT	ALTERNATE
ANC	ANCHOR
APVD	APPROVED
ARCH	ARCHITECT, ARCHITECTURAL
BC	BOTTOM CHORD
B.O.C.	BOTTOM OF CONCRETE
B.O.S.	BOTTOM OF STEEL
BOT	BOTTOM, BOTTOM OF TRENCH
BM	BEAM
BRG	BEARING
BTWN	BETWEEN
CC	CENTER TO CENTER
CHKD	CHECKERED
C.I.P.	CAST IN PLACE
C.J.	CONSTRUCTION JOINT
CL, ℄	CENTERLINE
CLR	CLEARANCE
CMU	CONCRETE MASONRY UNIT
COL	COLUMN
CONC	CONCRETE
CONN	CONNECTION
CONT	CONTINUOUS
CTR	CENTER
CTRD	CENTERED
D.B.A.	DEFORMED BAR ANCHOR
DIA, ø	DIAMETER
DP	DEEP
DWG	DRAWING
EA	EACH
ECS	EPOXY COATED STEEL
E.E.	EACH END
E.F.	EACH FACE
EL, ELEV	ELEVATION
EQ.	EQUALLY SPACED
E.S.	EACH SIDE
E.W.	EACH WAY
EXP	EXPANSION
EXST	EXISTING
FD	FLOOR DRAIN
FDN	FOUNDATION
FIN	FINISH
FLG	FLANGE
FLR	FLOOR
FO	FACE OF
FRMG	FRAMING
FRP	FIBER REINFORCED PLASTIC
FS	FAR SIDE
FTG	FOOTING
FV	FIELD VERIFY
GA	GAUGE, GAGE
GALV	GALVANIZED
GRD	GRADE
GRT	GROUT
GRTG	GRATING
H	HIGH
H.C.A.	HEADED CONCRETE ANCHOR
HORIZ	HORIZONTAL
HSB	HIGH STRENGTH BOLT
IF	INSIDE FACE
IN	INCHES
JT.	JOINT
L	LOW
LONG	LONGITUDINAL
LLH	LONG LEG HORIZONTAL
LLV	LONG LEG VERTICAL
LSH	LONG SLOTTED HOLE
MFR	MANUFACTURER

MAX	MAXIMUM
MB	MACHINE BOLT
M.E.P.	MECHANICAL, ELECTRICAL, AND PLUMBING
MECH	MECHANICAL
MIN	MINIMUM
MTL	METAL
NDT	NON–DESTRUCTIVE TESTING
N.I.C.	NOT IN CONTRACT
NOM.	NOMINAL
NS	NEAR SIDE
NTS	NOT TO SCALE
O.C.	ON CENTER
O.D.	OUTSIDE DIAMETER
O.F.	OUTSIDE FACE
O/O	OUT TO OUT
OPNG	OPENING
OPP.	OPPOSITE
OSH	OVERSIZED HOLE
PC	PRECAST
PLCS	PLACES
P.J.F.	PREMOLDED JOINT FILLER
PL, ℙ	PLATE
PROJ	PROJECTION
PVC	POLYVINYL CHLORIDE
RD	ROOF DRAIN
REINF	REINFORCE, REINFORCING
REQD	REQUIRED
RT	RADIOGRAPHIC TESTING
RTN	RETURN
S.B.D.	SCHED. BEAM DEPTH
S.B.W.	SCHED. BEAM WIDTH
S.J.D.	SCHED. JOIST DEPTH
S.J.W.	SCHED. JOIST WIDTH
SHT	SHEET
S.I.B.	STRUCTURAL ISOLATION BREAK
SIM.	SIMILAR
SLV	SHORT LEG VERTICAL
SPCG	SPACING
SPCS	SPACES
SPECS	SPECIFICATIONS
SQ	SQUARE
S.S.	STAINLESS STEEL
S.S.D.	SCHED. SLAB DEPTH
SSH	SHORT SLOTTED HOLE
STD	STANDARD
STIFF	STIFFENER
STL	STEEL
SW	STUD WELD
SYM.	SYMMETRICAL
T&B	TOP & BOTTOM
T/SL	TOP OF SLAB
TC	TOP CHORD
TD	TRUSS DIAGONAL
THK	THICK
TO.	TOP OF
T.O.C.	TOP OF CONCRETE
T.O.F.	TOP OF FOOTING
T.O.L.	TOP OF LUG
T.O.G.	TOP OF GRATING
T.O.S.	TOP OF STEEL
T.O.W.	TOP OF WALL
TRANS	TRANSVERSE
TV	TRUSS VERTICAL
TYP	TYPICAL
U.N.O.	UNLESS NOTED OTHERWISE
UT	ULTRASONIC TESTING
VERT	VERTICAL
W	WIDE
W/	WITH
WS	WATERSTOP
W.W.F.	WELDED WIRE FABRIC

STATEMENT OF SPECIAL INSPECTION PER IBC 2012, CHAPTER 17

PER SECTION 1705 OF THE 2012 INTERNATIONAL BUILDING CODE, THE FOLLOWING IS A LIST OF THE REQUIRED SPECIAL INSPECTIONS APPLICABLE FOR THIS PROJECT :

2012 IBC SECTION	INSPECTION / ASSURANCE	TYPE OF SPECIAL INSPECTIONS AND EXTENT	APPLICABLE	NON APPLICABLE	NON STRUCTURAL
1705.2	AISC 360	STEEL CONSTRUCTION	■	□	□
1705.2.2	IBC TABLE 17052.2	STEEL CONSTRUCTION OTHER THAN STRUCTURAL STEEL	■	□	□
1705.2.2.1.1	AWS D1.3	COLD-FORMED WELDING INSPECTION	□	■	□
1705.2.2.1.2	AWS D1.4 AND ACI 318	REINFORCING STEEL WELDING INSPECTION	□	■	□
1705.2.2.2	INDICATED IN SECTION	COLD-FORMED STEEL TRUSSES SPANNING 60 FEET OR GREATER	□	■	□
1705.3	IBC TABLE 1705.3	CONCRETE CONSTRUCTION	■	□	□
1705.4	INSPECTION: TMS 420/ACI 530/ASCE 5 ASSURANCE: TMS 620/ACI 530.1/ASCE 6	MASONRY CONSTRUCTION	□	■	□
1705.5	INDICATED IN SECTION	WOOD CONSTRUCTION	□	■	□
1705.6	INDICATED IN SECTION	SOILS	■	□	□
1705.7	INDICATED IN SECTION	DRIVEN DEEP FOUNDATIONS	□	■	□
1705.8	INDICATED IN SECTION	CAST-IN-PLACE DEEP FOUNDATIONS (PIERS)	□	■	□
1705.9	INDICATED IN SECTION	HELICAL PILE FOUNDATIONS	□	■	□
1705.10	INDICATED IN SECTION	SPECIAL INSPECTION FOR WIND RESISTANCE	□	■	□
1705.11	INDICATED IN SECTION	SPECIAL INSPECTION FOR SEISMIC RESISTANCE	□	■	□
1705.12	INDICATED IN SECTION	TESTING AND QUALIFICATION FOR SEISMIC RESISTANCE	□	■	□
1705.13	INDICATED IN SECTION	SPRAYED FIRE-RESISTANCE MATERIALS	□	■	□
1705.14	AWCI 12-B	MASTIC AND INTUMESCENT FIRE-RESISTANT COATINGS	□	■	□
1705.15	INDICATED IN SECTION & ASTM E2570	EXTERIOR INSULATION AND FINISH SYSTEMS/ WATER-RESISTIVE BARRIER COATING	□	■	□
1705.16	INDICATED IN SECTION	FIRE-RESISTANCE PENETRATIONS AND JOINTS	□	■	□
1705.17	INDICATED IN SECTION	SPECIAL INSPECTION FOR SMOKE CONTROL	□	■	□

PER CHAPTER 17 OF THE 2012 INTERNATIONAL BUILDING CODE, THE FOLLOWING IS A LIST OF ADDITIONAL SPECIAL INSPECTIONS APPLICABLE TO THIS PROJECT * :

2012 IBC SECTION	TYPE OF SPECIAL INSPECTIONS AND EXTENT	APPLICABLE	NON APPLICABLE	DETAILS
1706	DESIGN STRENGTH OF MATERIALS	□	■	
1707	ALTERNATIVE TEST PROCEDURES	□	■	
1708	TEST SAFE LOAD	□	■	
1709	IN-SITU LOAD TESTS	□	■	
1710	PRECONSTRUCTION LOAD TESTS	□	■	
1711	MATERIAL AND TEST STANDARDS	□	■	

* ADDITIONAL SPECIAL INSPECTIONS PER 2012 IBC SHALL ALSO BE REQUIRED FOR PROPOSED WORK THAT IS, IN THE OPINION OF THE BUILDING OFFICIAL, UNUSUAL IN NATURE.

JOSE I. GUERRA, INC
Texas Registered Engineering Firm F-3

KENNETH W. HANKS
97528
LICENSED PROFESSIONAL ENGINEER
10/17/16

FREESE AND NICHOLS
10431 Morado Circle, Suite 300
Austin, Texas 78759
Phone – (512) 617-3100
Fax – (512) 617-3101
Freese and Nichols, Inc.
Texas Registered Engineering Firm F-2144

Jose I. Guerra, Inc.
Consulting Engineers
8140 N. Mopac Expy. Suite 210
Austin, Texas 78759
(512) 345-2090
Structural • Civil • Mechanical • Electrical

THE CITY OF AUSTIN
FOUR POINT ELEVATED RESERVOIR IMPROVEMENTS
STRUCTURAL
GENERAL NOTES

NO.	ISSUE	BY	DATE
1	ADDENDUM #1	KWH	10/17/16

F&N JOB NO. AU116177
DATE 08/15/16
DESIGNED BB
DRAWN RH
REVISED RH
CHECKED BB
FILE NAME S1.2.dwg

VERIFY SCALE Bar is one inch on original drawing. If not one inch on this sheet, adjust scale.
0 1

SHEET S1.2
SEQ. –

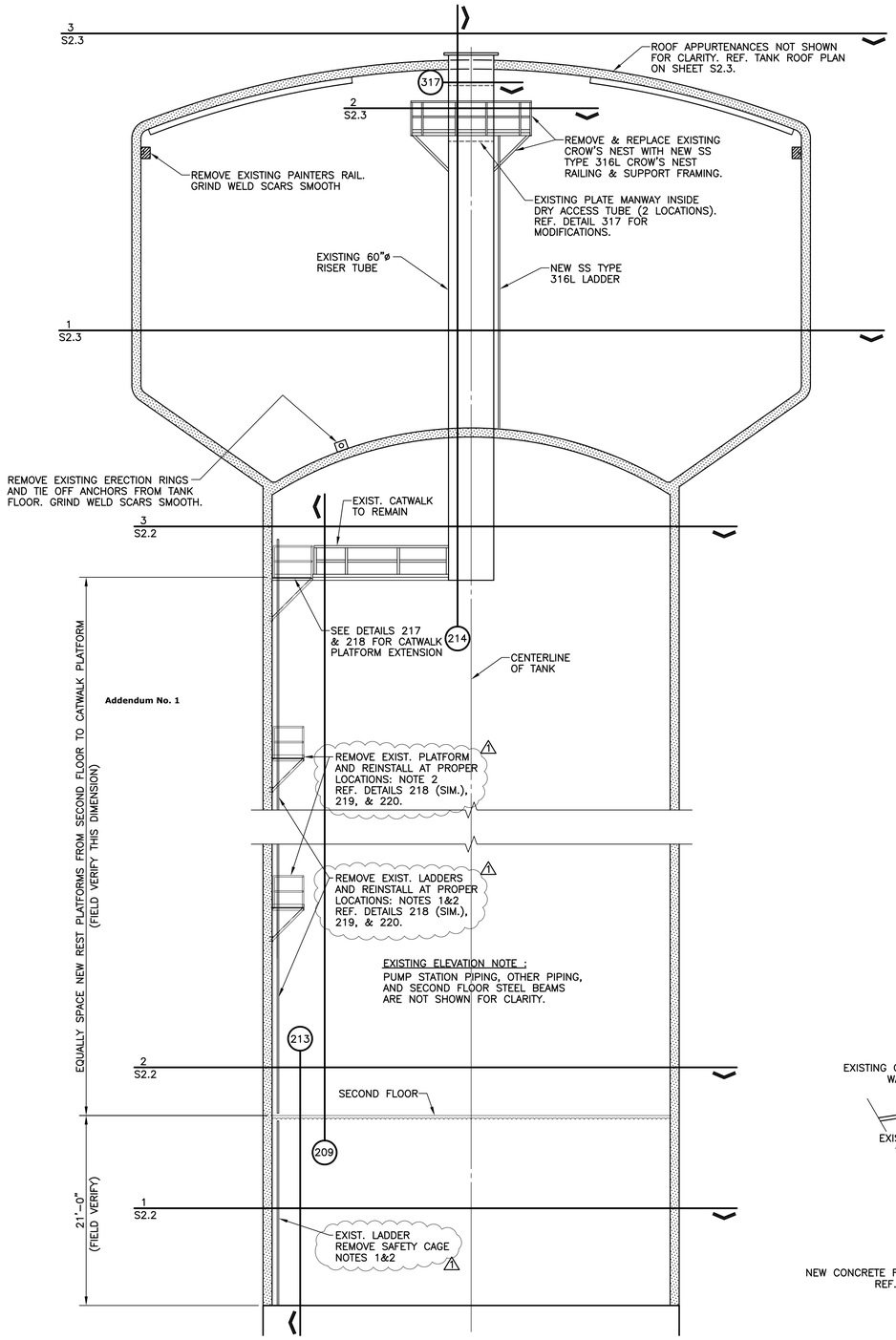

1 ELEVATED TANK SECTION
SCALE: 1/8" = 1'-0"

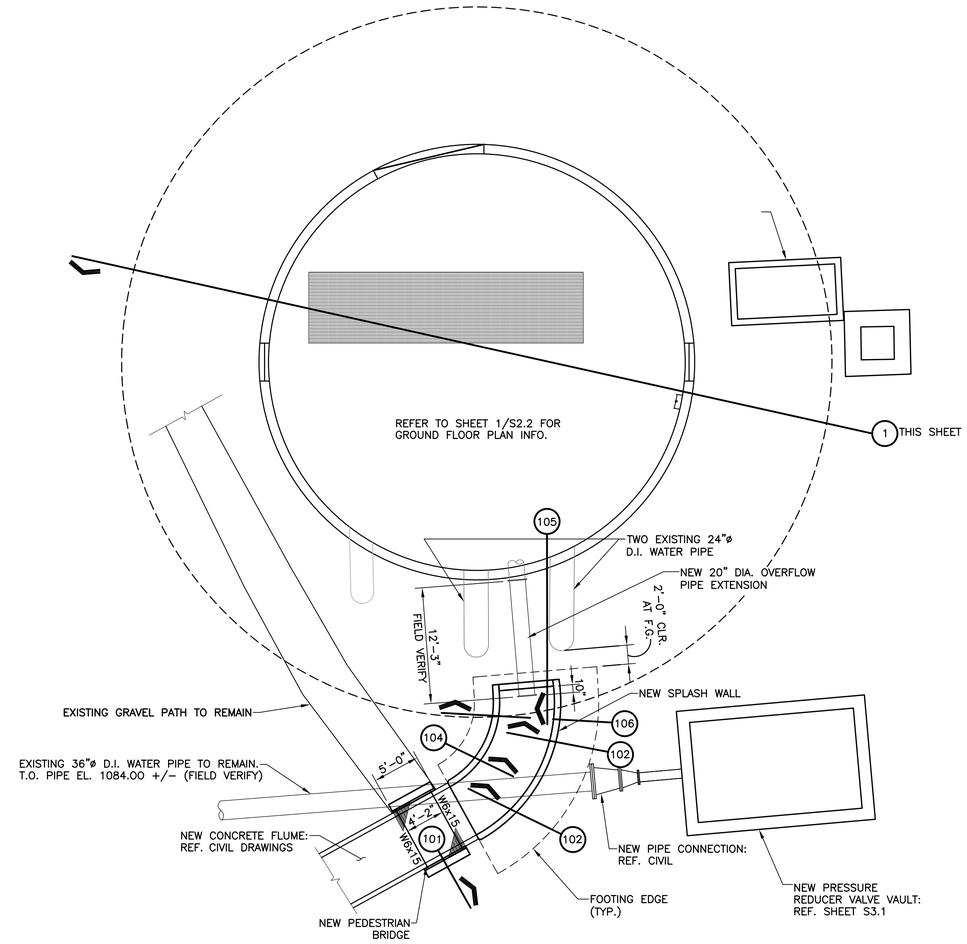

2 SITE PLAN
SCALE: 1/8" = 1'-0"

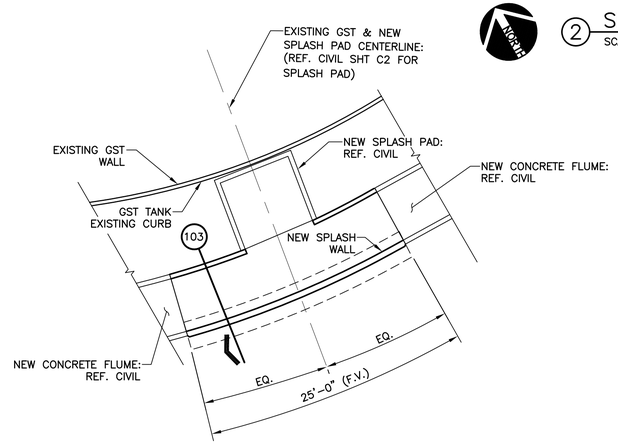

3 NEW SPLASH WALL PLAN @ GST
SCALE: 1/8" = 1'-0"

SHEET NOTES:
1. THE CONTRACTOR SHALL PROVIDE 3 mm PROFILE ON THE TOP OF THE LADDER RUNGS.
2. GRIND CUTTING SCARS SMOOTH. APPLY COLD GALVAIZATING. ABRASIVE BLASTING IN NOT ALLOWED.

PIPING, CONDUITS, AND OTHER POTENTIAL OBSTRUCTIONS – TO BE ROUTED IN THE VICINITY OF LADDERS, SAFETY RAILS, AND PLATFORMS – SHALL BE COORDINATED WITH A CITY OF AUSTIN REPRESENTATIVE PRIOR TO INSTALLATION.

JOSE I. GUERRA, INC.
Texas Registered Engineering Firm F-3

KENNETH W. HANKS
97528
LICENSED PROFESSIONAL ENGINEER
10/17/16

FREESE AND NICHOLS
10431 Morado Circle, Suite 300
Austin, Texas 78759
Phone – (512) 617-3100
Fax – (512) 617-3101
Freese and Nichols, Inc.
Texas Registered Engineering Firm F-2144

Jose I. Guerra, Inc.
Consulting Engineers
8400 N. MoPac Expy, Suite 210
Austin, Texas 78759
(512) 445-2000
Structural • Civil • Mechanical • Electrical

THE CITY OF AUSTIN
FOUR POINT ELEVATED RESERVOIR IMPROVEMENTS
STRUCTURAL
SITE PLAN AND ELEVATION

NO.	ISSUE	BY	DATE
1	ADDENDUM #1	KWH	10/17/16

F&N JOB NO.	AU116177
DATE	08/15/16
DESIGNED	BB
DRAWN	RH
REVISED	RH
CHECKED	BB
FILE NAME	S2.1.dwg

VERIFY SCALE Bar is one inch on original drawing. If not one inch on this sheet, adjust scale.

SHEET S2.1
SEQ. –

ACAD Rel 18.2s (LMS Tech) User: 02160
FSAV170.4TD C:\USERS\02160\DESKTOP\AUSTIN\34BORDER.DWG LAYOUT: Model
09/17/2012 1:16:33 P.M. LTS: 1 PSLTS: 1

Date: Oct 17, 2016 – 2:32pm User: gfrey File: F:\16013_COA Four Points EST Repairs\DRAWINGS\CAD\S2.1.dwg

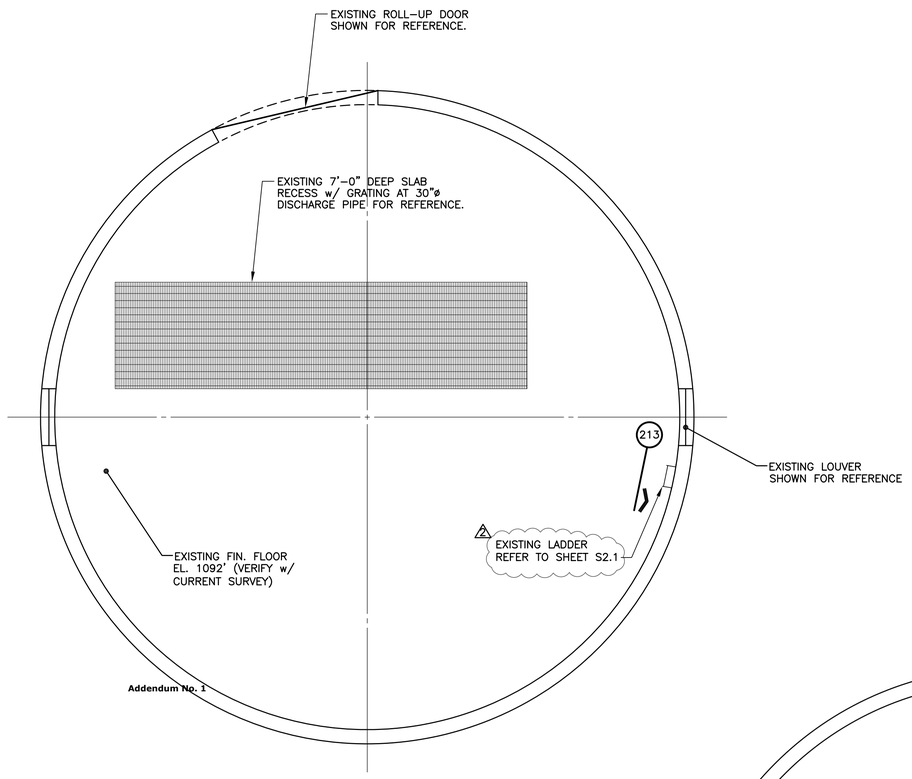

1 GROUND FLOOR PLAN
SCALE: 3/16" = 1'-0"

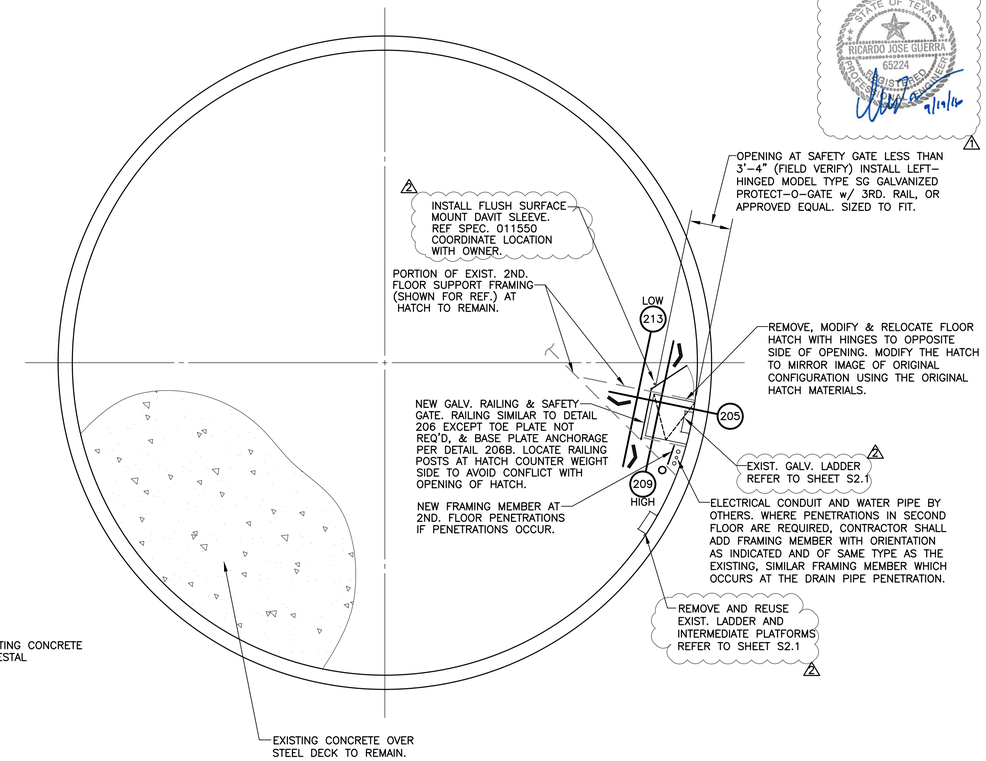

2 SECOND FLOOR PLAN
SCALE: 3/16" = 1'-0"

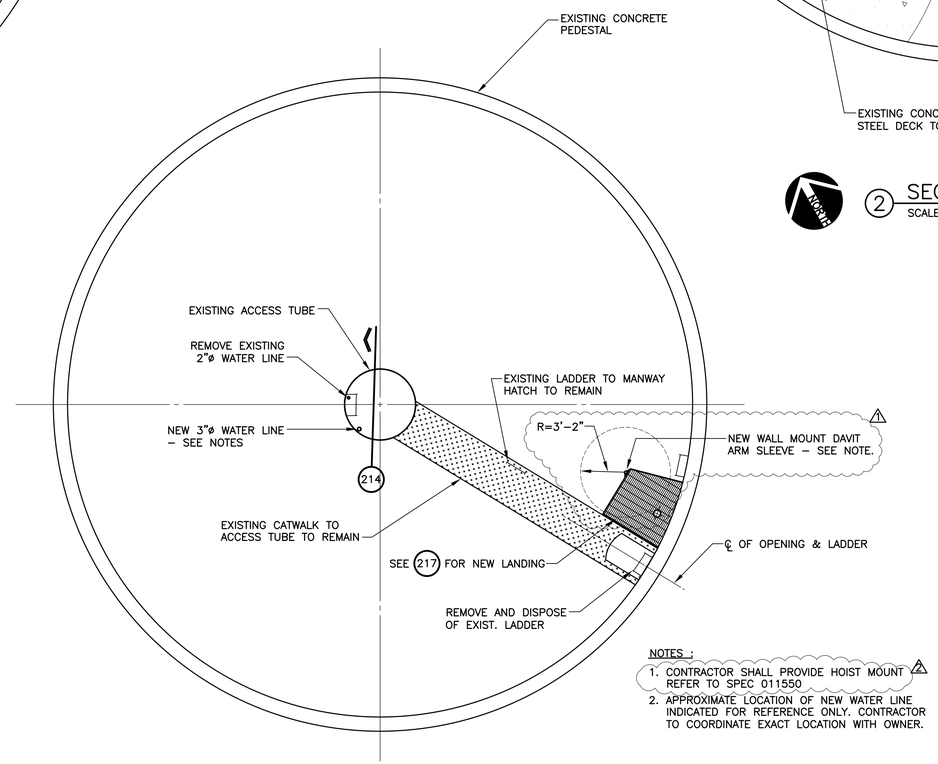

NOTES :
1. CONTRACTOR SHALL PROVIDE HOIST MOUNT REFER TO SPEC 011550
2. APPROXIMATE LOCATION OF NEW WATER LINE INDICATED FOR REFERENCE ONLY. CONTRACTOR TO COORDINATE EXACT LOCATION WITH OWNER.

3 CATWALK PLATFORM PLAN
SCALE: 3/16" = 1'-0"

PIPING, CONDUITS, AND OTHER POTENTIAL OBSTRUCTIONS - TO BE ROUTED IN THE VICINITY OF LADDERS, SAFETY RAILS, AND PLATFORMS - SHALL BE COORDINATED WITH A CITY OF AUSTIN REPRESENTATIVE PRIOR TO INSTALLATION.

STATE OF TEXAS
RICARDO JOSE GUERRA
65224
PROFESSIONAL ENGINEER
9/19/16

JOSE I. GUERRA, INC.
Texas Registered Engineering Firm F-3

STATE OF TEXAS
KENNETH W. HANKS
97528
LICENSED
PROFESSIONAL ENGINEER
10/17/16

FREESE AND NICHOLS
10431 Morado Circle, Suite 300
Austin, Texas 78759
Phone - (512) 617-3100
Fax - (512) 617-3101
Freese and Nichols, Inc.
Texas Registered Engineering Firm F-2144

Jose I. Guerra, Inc.
Consulting Engineers
8148 Shoal Creek Blvd., Suite 210
Austin, Texas 78757
(512) 445-2090
Structural • Civil • Mechanical • Electrical

THE CITY OF AUSTIN
FOUR POINT ELEVATED RESERVOIR IMPROVEMENTS
STRUCTURAL
GROUND FLOOR, 2ND FLOOR, AND CATWALK PLATFORM PLANS

NO.	ISSUE	BY	DATE
1	RELOCATED DAVIT ARM SLEEVE	RH	9-19-16
2	ADDENDUM #1	KWH	10/17/16

F&N JOB NO. AU116177
DATE 08/15/16
DESIGNED BB
DRAWN RH
REVISED RH
CHECKED BB
FILE NAME S2.2.dwg

VERIFY SCALE Bar is one inch on original drawing. If not one inch on this sheet, adjust scale.
0 1

SHEET S2.2
SEQ. -

ACAD Rel 18.2s (LMS Tech) User: 02160
C:\AMTAMP\DC\USERS\02160\DESKTOP\AUSTIN\34BORDER.DWG LAYOUT: Model
09/17/2012 1:16:33 P.M. LTS: 1 PSLTS: 1

Date: Oct 17, 2016 - 2:21pm User: gfrey File: F:\16013_COA Four Points EST Repairs\DRAWINGS\CAD\S2.2.dwg

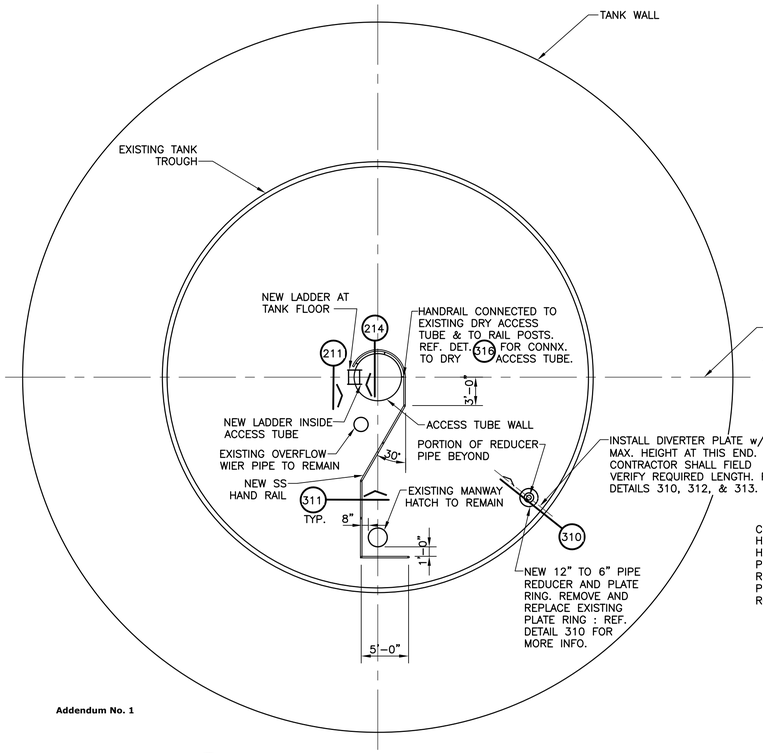

Addendum No. 1

1 BOTTOM OF TANK PLAN
SCALE: 1/8" = 1'-0"

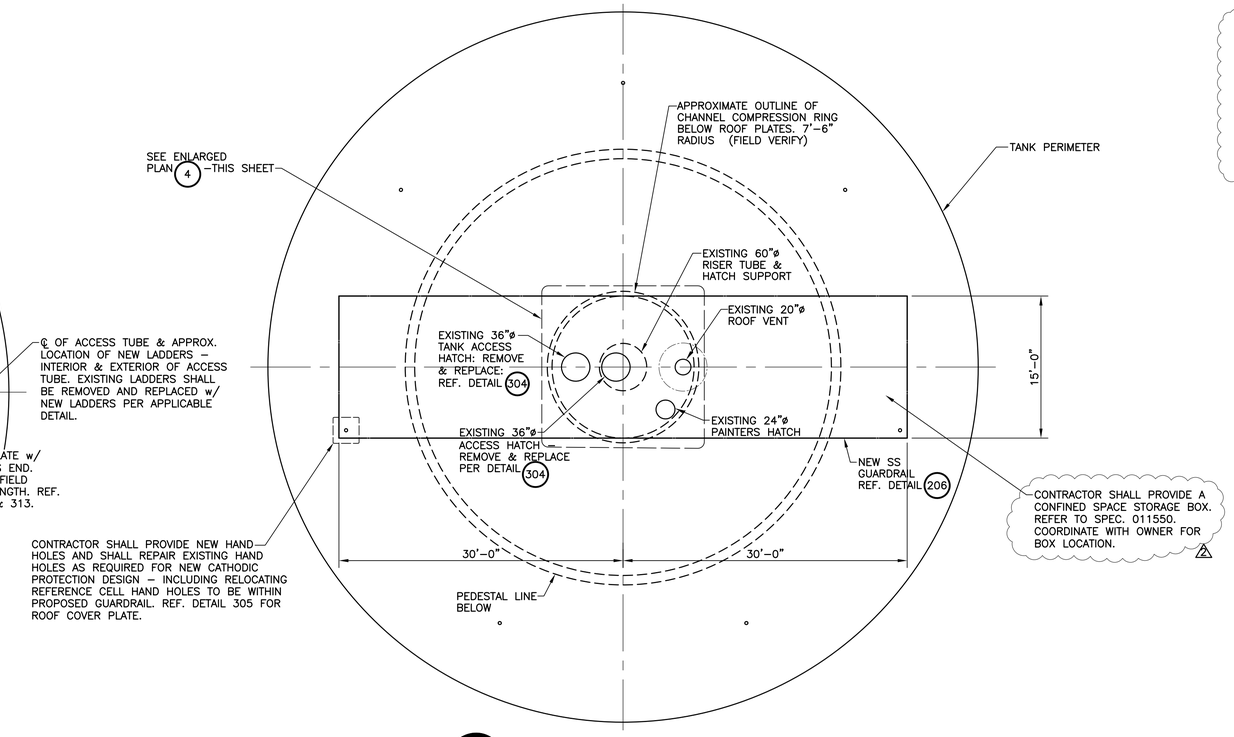

3 TANK ROOF PLAN
SCALE: 1/8" = 1'-0"

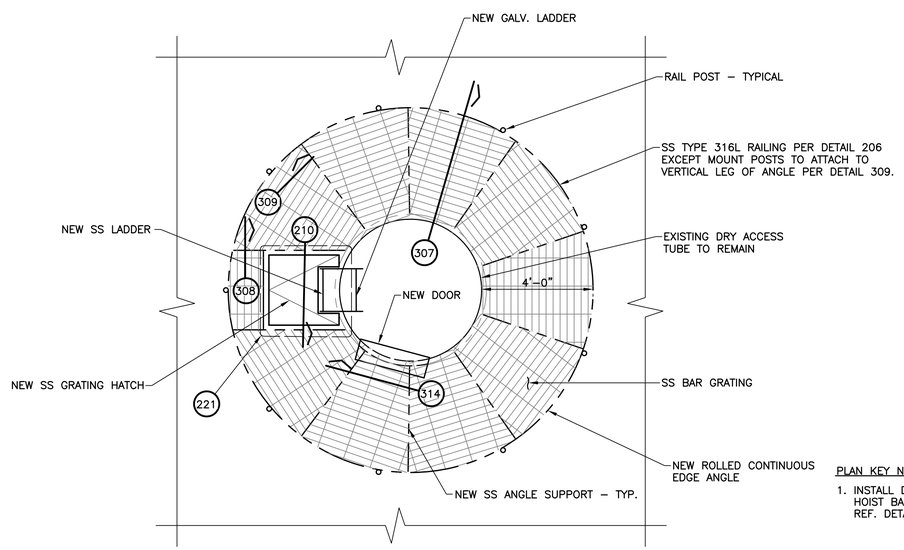

2 CROW'S NEST PLAN
SCALE: 3/8" = 1'-0"

PLAN KEY NOTES:

1. INSTALL DOUBLE ANGLES TO SUPPORT HOIST BASE PER MFR. REQUIREMENTS : REF. DETAIL 303

PIPING, CONDUITS, AND OTHER POTENTIAL OBSTRUCTIONS – TO BE ROUTED IN THE VICINITY OF LADDERS, SAFETY RAILS, AND PLATFORMS – SHALL BE COORDINATED WITH A CITY OF AUSTIN REPRESENTATIVE PRIOR TO INSTALLATION.

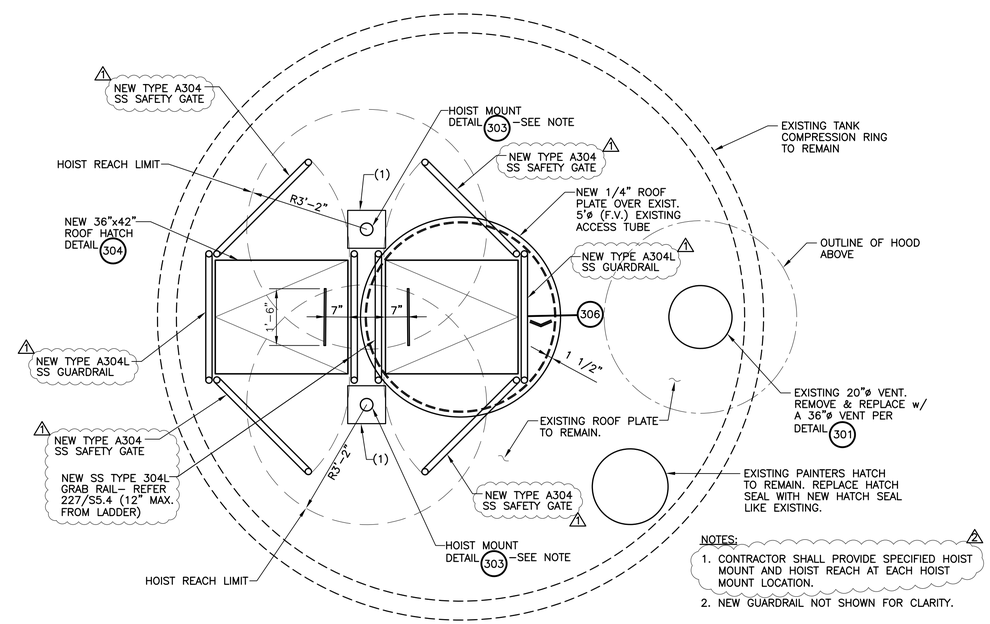

NOTES:

1. CONTRACTOR SHALL PROVIDE SPECIFIED HOIST MOUNT AND HOIST REACH AT EACH HOIST MOUNT LOCATION.
2. NEW GUARDRAIL NOT SHOWN FOR CLARITY.

4 ENLARGED ROOF HATCH PLAN
SCALE: 1/2" = 1'-0"

STATE OF TEXAS
RICARDO JOSE GUERRA
65224
REGISTERED
PROFESSIONAL ENGINEER
9/19/16

JOSE I. GUERRA, INC.
Texas Registered Engineering Firm F-3

KENNETH W. HANKS
97528
LICENSED
PROFESSIONAL ENGINEER
10/17/16

FREESE AND NICHOLS
10431 Morado Circle, Suite 300
Austin, Texas 78759
Phone – (512) 617-3100
Fax – (512) 617-3101
Freese and Nichols, Inc.
Texas Registered Engineering Firm F-2144

Jose I. Guerra, Inc.
Consulting Engineers
8140 N. MoPac Expy. Suite 210
Austin, Texas 78759
(512) 445-2090
Structural • Civil • Mechanical • Electrical

THE CITY OF AUSTIN
FOUR POINT ELEVATED RESERVOIR IMPROVEMENTS
STRUCTURAL
BOTTOM OF TANK, CROW'S NEST, AND ROOF PLANS

NO.	ISSUE	BY	DATE
1	REVISED HATCH, GATES, AND RAILS	RH	9-19-16
2	ADDENDUM #1	KWH	10/17/16

F&N JOB NO. AU116177
DATE 08/15/16
DESIGNED BB
DRAWN RH
REVISED RH
CHECKED BB
FILE NAME S2.3.dwg

VERIFY SCALE Bar is one inch on original drawing. If not one inch on this sheet, adjust scale.
0 1

SHEET S2.3
SEQ. –

ACAD Rel 18.2s (LMS Tech) User: 02160
CSAF7041[C:\USERS\02160\DESKTOP\AUSTIN\34BORDER.DWG LAYOUT: Model
09/17/2012 1:16:33 P.M. LTS: 1 PSLTS: 1

Date: Oct 17, 2016 – 2:24pm User: gfrey File: F:\16013_COA Four Points EST Repairs\DRAWINGS\CAD\S2.3.dwg

KEY NOTES (DETAIL 101)
1. GALV. BAR GRATING: 1"x1/8" BARS @ 1-3/16" O.C.
2. NEW CONC. FLUME: REF. CIVIL SHEET C2 FOR DETAIL
3. GALV. L2 1/2x2 1/2x1/4x10"W/ (2) 1/2"x6" H.C.A. (CTRD.) @ 4" O.C.
4. #4 CONTINOUS
5. SLOPE FINISHED GRADE AWAY FROM NEW CONCRETE GRADE BEAM.
6. NEW CONC. GRADE BEAM W/ (2) #5 HORIZ. CONT. REINF. TOP & BTM & #3 TIES @ 12"
7. COMPACTED FILL.
8. 3/4" CHAMFER – TYP.
9. PAINT FACE OF CONCRETE YELLOW.

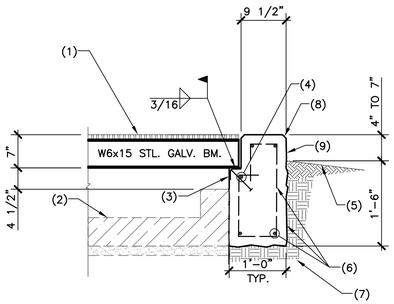

101 PEDESTRIAN BRIDGE @ OVERFLOW CHANNEL
SCALE: 3/4" = 1'-0"

KEY NOTES (DETAIL 102)
1. NEW 8" CONCRETE WALL.
2. #4 CONT. HORIZ. REINF. @ 9" O.C.
3. #4 CONT. VERT. REINF. @ 6" O.C. CENTERED. & w/ ACI STD. 90° HOOK AT FOOTING. ALT. BENDS
4. #5 @ 6" O.C. E.W. AT BOTTOM OF FOOTING.
5. APPROVED COMPACTED SUBGRADE PREPARED PER SPECIFICATION C.O.A. STANDARD SPEC. 201S (TYP.)
6. NEW CONCRETE FLUME: REF. CIVIL FOR SLOPE & ELEVATION. STRIP-TYPE WATERSTOP
7. CONT. SELF-EXPANDING
8. WATERPROOFING MATERIAL

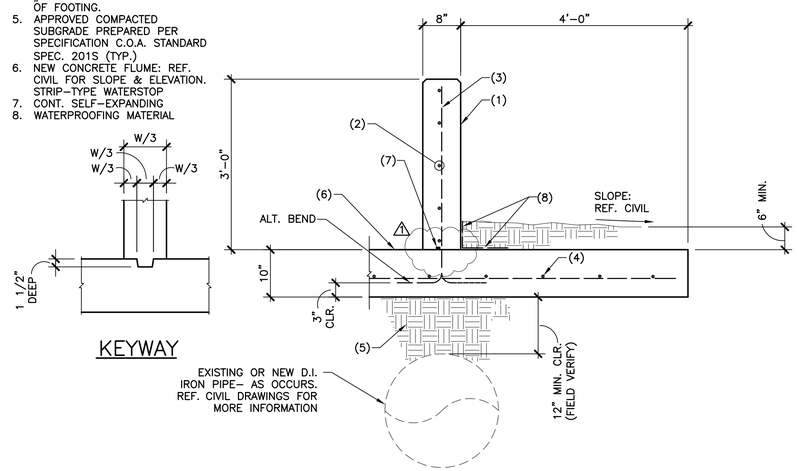

102 SPLASH WALL SECTION
SCALE: 3/4" = 1'-0"

KEY NOTES (DETAIL 103)
1. NEW 8" CONCRETE WALL.
2. #4 CONT. HORIZ. REINF. @ 9" O.C.
3. #4 CONT. VERT. REINF. @ 6" O.C. CENTERED. & w/ ACI STD. 90° HOOK AT FOOTING, ALT. BENDS.
4. #4 @ 6" O.C. E.W. AT BOTTOM OF FOOTING.
5. APPROVED COMPACTED SUBGRADE PREPARED PER SPECIFICATION C.O.A. STANDARD SPEC. 201S (TYP.)
6. MIN. 24" LAP AT OFFSET SLAB REINF.
7. SLOPE TO DRAIN AWAY FROM WALL
8. CONT. SELF-EXPANDING STRIP-TYPE WATERSTOP
9. WATERPROOFING MATERIAL
10. CONCRETE FLUME: REF. CIVIL SHEET C2 FOR FLOW LINE ELEVATIONS
11. SAND CUSHION: REF. CIVIL

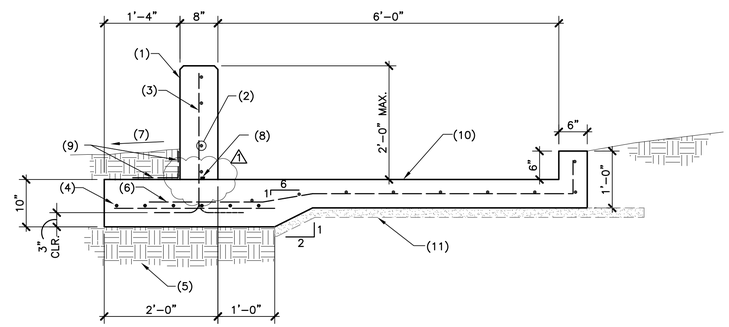

103 SPLASH WALL AT GROUND STORAGE TANK
SCALE: 3/4" = 1'-0"

Addendum No. 1

KEY NOTES (DETAIL 104)
1. NEW 8" CONCRETE WALL.
2. #4 CONT. HORIZ. REINF. @ 9" O.C.
3. #4 CONT. VERT. REINF. @ 6" O.C. CENTERED. & w/ ACI STD. 90° HOOK AT FOOTING. ALT. BENDS
4. #4 @ 6" O.C. E.W. AT BOTTOM OF FOOTING.
5. APPROVED COMPACTED SUBGRADE PREPARED PER SPECIFICATION C.O.A. STANDARD SPEC. 201S (TYP.)
6. NEW CONCRETE FLUME: REF. CIVIL FOR SLOPE
7. CONT. SELF-EXPANDING STRIP-TYPE WATERSTOP
8. WATERPROOFING MATERIAL

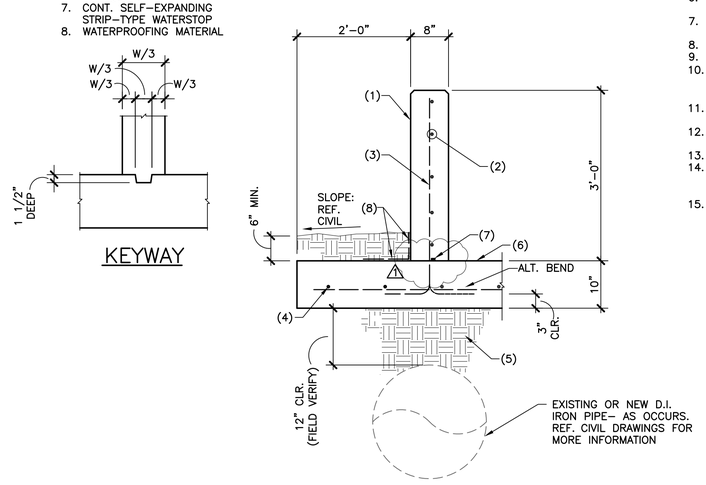

104 SPLASH WALL SECTION
SCALE: 3/4" = 1'-0"

KEY NOTES (DETAIL 105)
1. EXISTING PEDESTAL WALL
2. TANK PEDESTAL GROUND FLOOR ELEVATION 1092.00 (F.V.)
3. EXISTING PORTION OF OVERFLOW PIPE. REMOVE EXISTING FLAP GATE AND PREP PIPE FOR ATTACHMENT OF NEW EXTENSION PIPE.
4. NEW CONC. FLUME: REF. CIVIL FOR SLOPE AND FOR ELEVATION.
5. 20" DIA. STEEL PIPE EXTENSION MATCH TYPE AND CLASS OF EXISTING. DIMENSIONS SHALL CONFORM TO AWWA C208.
6. NEW WATERMAN OVERFLOW FLAP GATE OR APPROVED EQUAL.
7. PORTION OF CONCRETE SPLASH WALL BEYOND.
8. CONCRETE WALL
9. CONCRETE FOOTING
10. #4 VERT. AND HORIZ. REINF. @ 6 O.C. w/ ACI 90° STD. HOOK AT FOOTING. ALT. BENDS.
11. #4 @ 6" O.C. EA. WAY AT BOT. OF FOOTING
12. CONT. SELF-EXPANDING STRIP-TYPE WATERSTOP
13. WATERPROOFING MATERIAL
14. MIN. COVER OVER DRAINAGE PIPES AS REQ'D. BY C.O.A. AND OTHER CONSULTANTS.
15. NEW PIPE FLANGE TO EXISTING PIPE FLANGE C.O.A. APPROVED CONNECTION BY OTHERS.

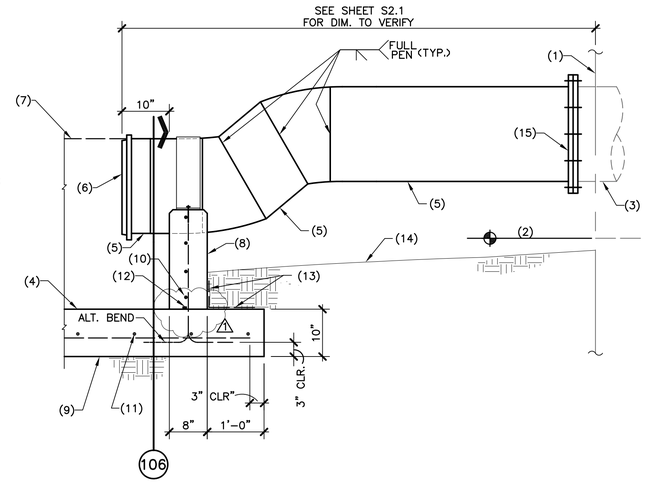

105 OVERFLOW PIPE EXTENSION AND SUPPORT
SCALE: 3/4" = 1'-0"

KEY NOTES (DETAIL 106)
1. KEYWAY AND CORNER REINFORCEMENT AT CONSTRUCTION JOINT.
2. CONCRETE WALL
3. CONCRETE FOOTING.
4. CONCRETE CRADLE WALL. SECURE PIPE & ADD MIN. 1/8" THICK NEOPRENE LAYER PRIOR TO PLACEMENT.
5. (2) #4 ADD'L. BARS w/ ACI STD. 90° HOOK INTO FOOTING.
6. #4 x 4'-6" ADD'L. HORIZ. REINF.
7. #4 x 3'-6" ADD'L. DIAGONAL REINF.
8. STEEL PIPE
9. WRAP 1/4" THICK NEOPRENE LAYER ALL THE WAY AROUND PIPE BETWEEN PIPE AND SADDLE AND PIPE AND CRADLE.
10. 3/8" THICK x 5" WIDE SS STRAP
11. 3/4"ø SS ALL-THREAD ANCHOR. EMBED WITH EPOXY 5".
12. 3/4" CHAMFER

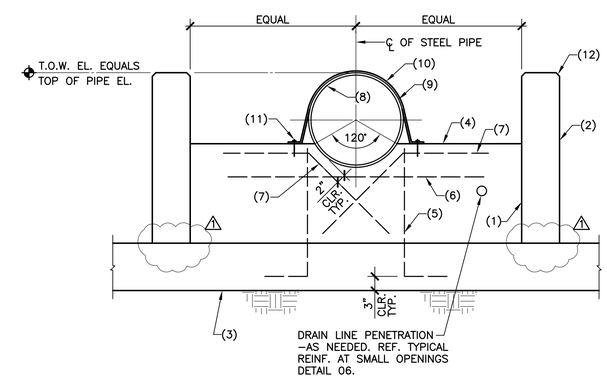

NOTE :
REF. WALL SECTION DETAILS FOR REINF. CENTER ADD'L. HORIZ. & DIAGONAL BARS ABOUT PIPE ℄.

106 PIPE SADDLE, CRADLE, AND ADD'L. REINF.
SCALE: 3/4" = 1'-0"

JOSE I. GUERRA, INC.
Texas Registered Engineering Firm F-3

KENNETH W. HANKS
97528
LICENSED PROFESSIONAL ENGINEER
10/17/16

FREESE AND NICHOLS
10431 Morado Circle, Suite 300
Austin, Texas 78759
Phone – (512) 617-3100
Fax – (512) 617-3101
Freese and Nichols, Inc.
Texas Registered Engineering Firm F-2144

Jose I. Guerra, Inc.
Consulting Engineers
8140 N. MoPac Expy. Suite 210
Austin, Texas 78759
(512) 445-2090
Structural • Civil • Mechanical • Electrical

THE CITY OF AUSTIN
FOUR POINT ELEVATED RESERVOIR IMPROVEMENTS
STRUCTURAL
SITE DETAILS

NO.	ISSUE	BY	DATE
1	ADDENDUM #1	KWH	10/17/16

F&N JOB NO.	AU116177
DATE	08/15/16
DESIGNED	BB
DRAWN	RH
REVISED	RH
CHECKED	BB
FILE NAME	S4.1.dwg

VERIFY SCALE Bar is one inch on original drawing. If not one inch on this sheet, adjust scale.
0 1

SHEET S4.1
SEQ. –

ACAD Rel 18.2s (LMS Tech) User: 02160
CS-M12 v18.0(LC) U:\USERS\02160\DESKTOP\AUSTIN\34BORDER.DWG LAYOUT: Model
09/17/2012 1:16:53 P.M. LTS: 1 PSLTS: 1

Date: Oct 17, 2016 – 2:25pm User: gfrey File: F:\16013_COA Four Points EST Repairs\DRAWINGS\CAD\S4.1.dwg

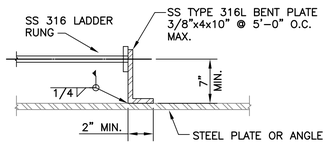

207 DETAIL
SCALE: 1" = 1'-0"

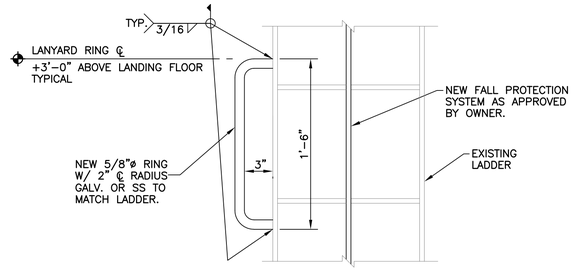

208 LANDING LANYARD RING DETAIL
SCALE: 1 1/2" = 1'-0"

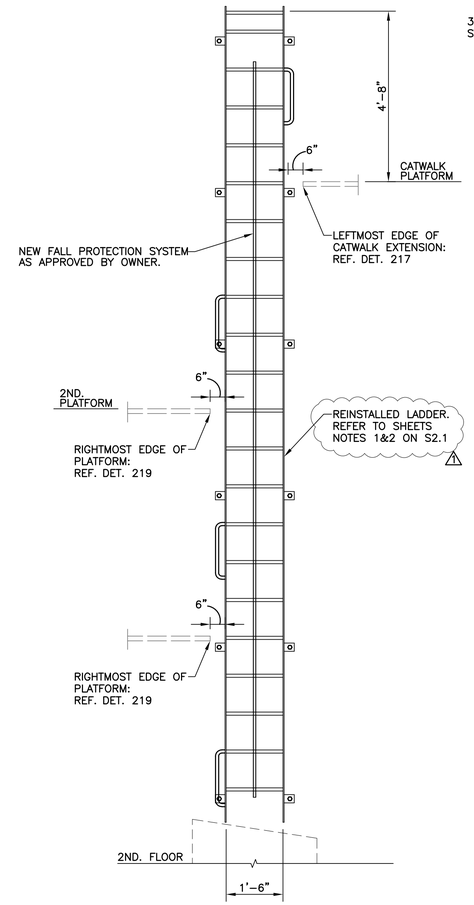

209 2ND. FLOOR TO CATWALK ELEVATION
SCALE : 1/2" = 1'-0"

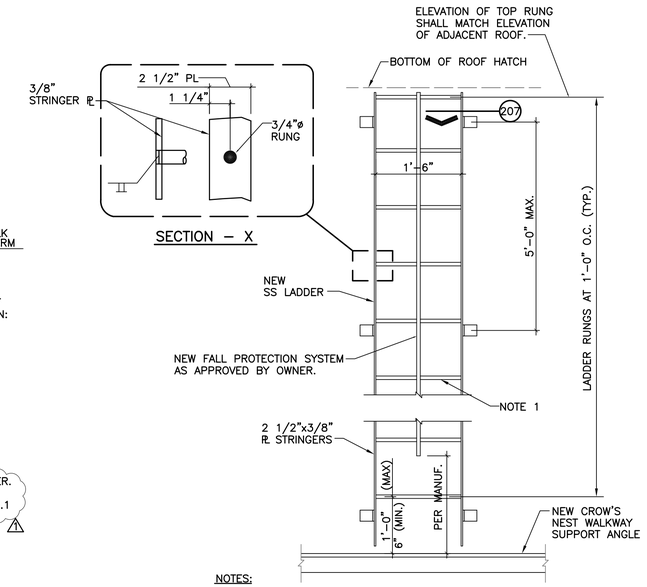

NOTES:
1. LADDER RUNGS ARE TO BE KNURLED, DIMPLED CORRUGATED W/ SKID–RESISTANT MATERIAL OR OTHERWISE TREATED TO MINIMIZE SLIPPING.
2. LADDER TO MEET OSHA REQUIREMENTS.

210 LADDER ABOVE CROW NEST
SCALE : 3/4" = 1'-0"

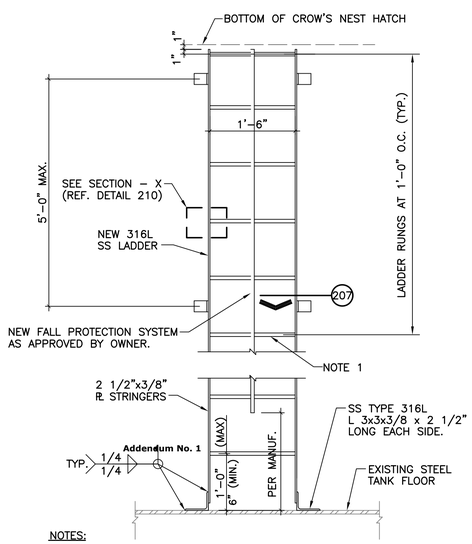

NOTES:
1. LADDER RUNGS ARE TO BE KNURLED, DIMPLED CORRUGATED W/ SKID–RESISTANT MATERIAL OR OTHERWISE TREATED TO MINIMIZE SLIPPING.
2. LADDER TO MEET OSHA REQUIREMENTS.

211 LADDER BELOW CROW NEST
SCALE : 3/4" = 1'-0"

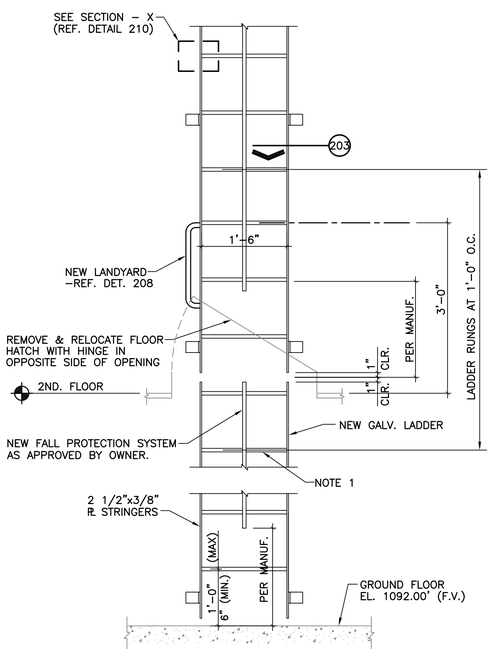

NOTES:
1. LADDER RUNGS ARE TO BE PROVIDED WITH A 3mm PROFILE ON THE TOP OF THE RUNGS.
2. LADDER TO MEET OSHA REQUIREMENTS.

213 LADDER AT GROUND FLOOR TO SECOND FLOOR
SCALE : 3/4" = 1'-0"

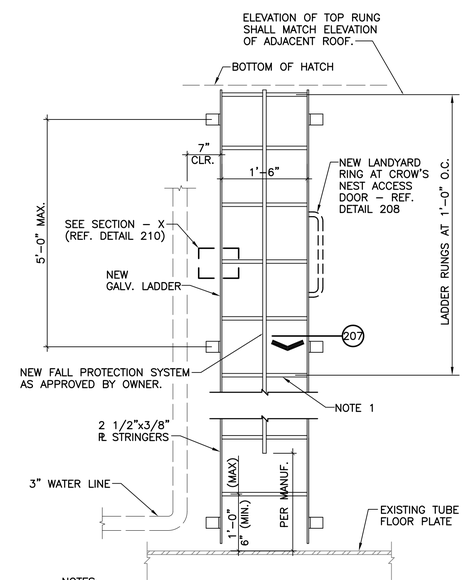

NOTES:
1. LADDER RUNGS ARE TO BE PROVIDED WITH A 3mm PROFILE ON THE TOP OF THE RUNGS.
2. LADDER TO MEET OSHA REQUIREMENTS.
3. PLATE MANWAY NOT SHOWN FOR CLARITY, REF. SECTION 1/S2.1 AND DETAIL 317 FOR PLATE MANWAYS IN DRY ACCESS TUBE.

214 LADDER INSIDE ACCESS TUBE
SCALE : 3/4" = 1'-0"

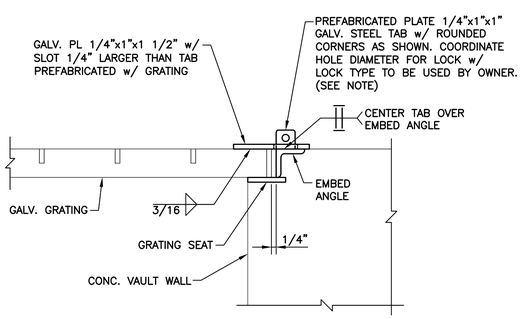

212 LOCKING HASP DETAIL
SCALE : 3/4" = 1'-0"

NOTES:
1. PROVIDE AN ADDITIONAL, IDENTICAL GALV. STEEL TAB AND INSTALL AT TOP RAILING & ENSURE TO INSTALL PROPERLY ALIGNED w/ SLOTTED PLATE NEAREST SAFETY GATE TO ENABLE LOCKING THE HASP IN AN OPEN POSITION.

JOSE I. GUERRA, INC.
Texas Registered Engineering Firm F-3

KENNETH W. HANKS
97528
LICENSED PROFESSIONAL ENGINEER
10/17/16

FREESE AND NICHOLS
10431 Morado Circle, Suite 300
Austin, Texas 78759
Phone – (512) 617-3100
Fax – (512) 617-3101
Freese and Nichols, Inc.
Texas Registered Engineering Firm F-2144

Jose I. Guerra, Inc.
Consulting Engineers
8140 N. Mopac Expy., Suite 210
Austin, Texas 78759
(512) 345-2090
Structural • Civil • Mechanical • Electrical

THE CITY OF AUSTIN
FOUR POINT ELEVATED RESERVOIR IMPROVEMENTS
STRUCTURAL
LADDER, RAILING, AND GRATING
SHEET 2 OF 4

NO.	ISSUE	BY	DATE
1	ADDENDUM #1	KWH	10/17/16

F&N JOB NO. AU116177
DATE 08/15/16
DESIGNED BB
DRAWN RH
REVISED RH
CHECKED BB
FILE NAME S5.2.dwg

VERIFY SCALE Bar is one inch on original drawing. If not one inch on this sheet, adjust scale.
0 1

SHEET S5.2
SEQ. –

ACAD Rel 18.2s (LMS Tech) User: 02160
SAVED: 10/17/2016 [C:\USERS\02160\DESKTOP\AUSTIN\34BORDER.DWG LAYOUT: Model
PLOTTED: 10/17/2012 1:16:33 P.M. LTS: 1 PSLTS: 1

Date: Oct 17, 2016 – 2:26pm User: gfrey File: F:\16013_COA Four Points EST Repairs\DRAWINGS\CAD\S5.2.dwg

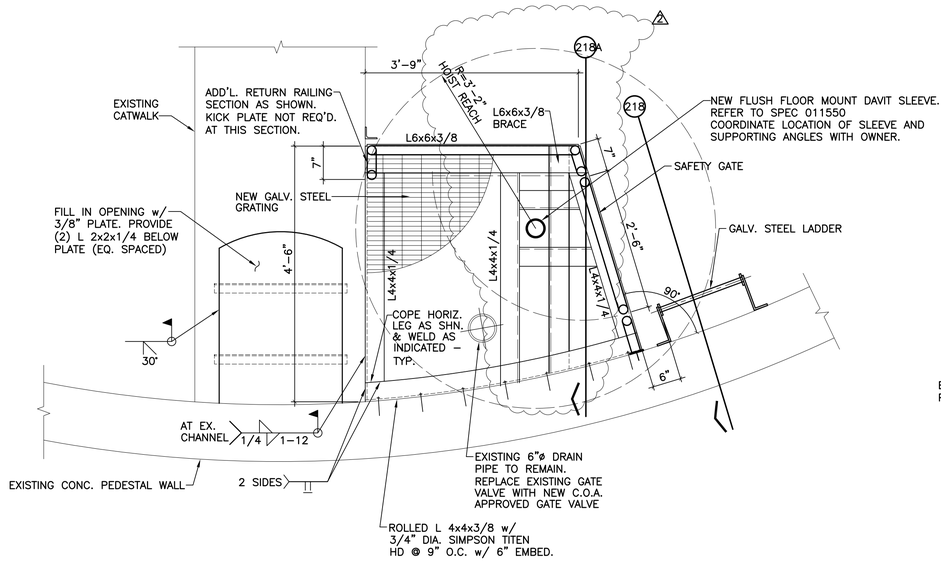

NOTE:
USE GALVANIZED STRUCTURAL STEEL

217 NEW LANDING TO CATWALK PLAN
SCALE: 3/4" = 1'-0"

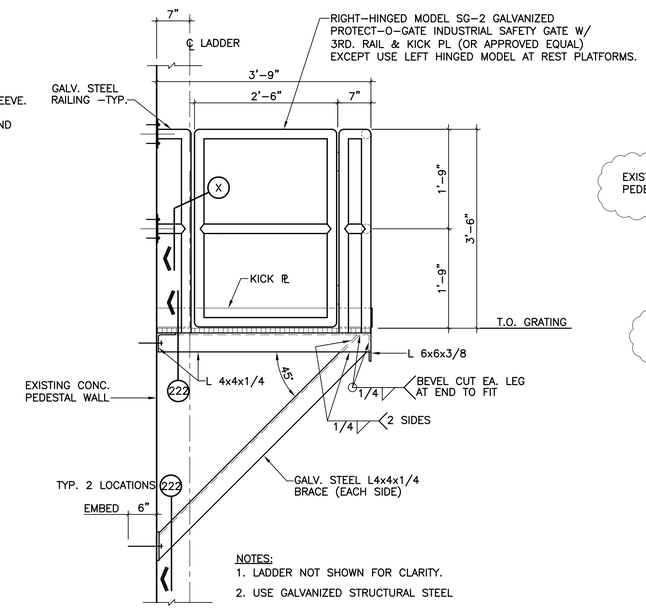

NOTES:
1. LADDER NOT SHOWN FOR CLARITY.
2. USE GALVANIZED STRUCTURAL STEEL

218 NEW LANDING TO CATWALK SECTION (REST PLATFORM SIM.)
SCALE: 3/4" = 1'-0"

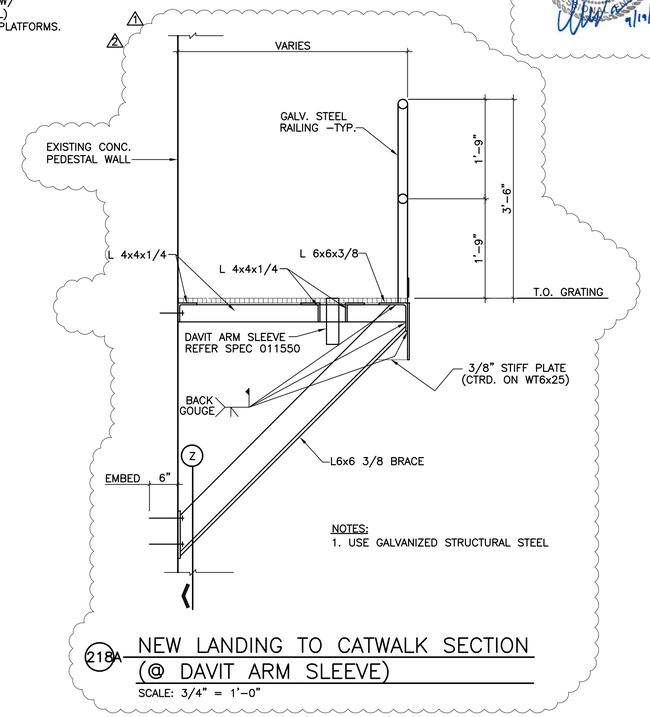

NOTES:
1. USE GALVANIZED STRUCTURAL STEEL

218A NEW LANDING TO CATWALK SECTION (@ DAVIT ARM SLEEVE)
SCALE: 3/4" = 1'-0"

Addendum No. 1

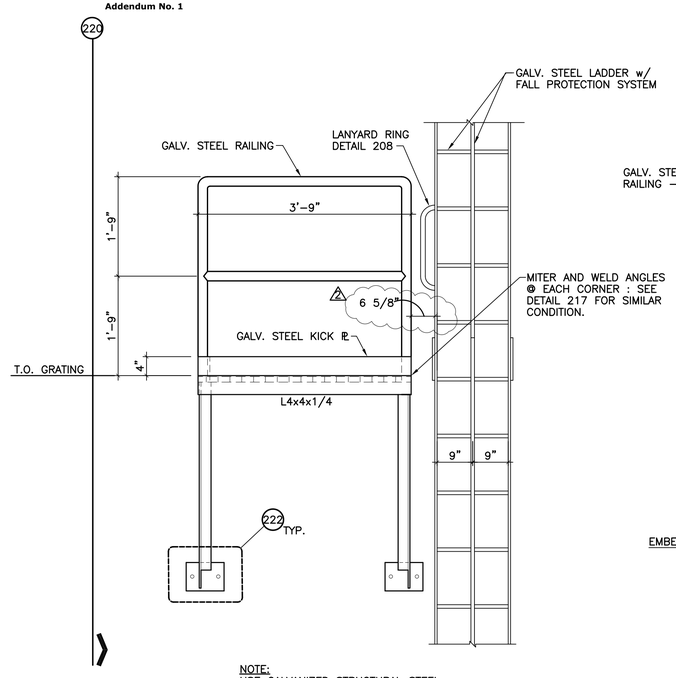

NOTE:
USE GALVANIZED STRUCTURAL STEEL

219 REST PLATFORM ELEVATION
SCALE: 3/4" = 1'-0"

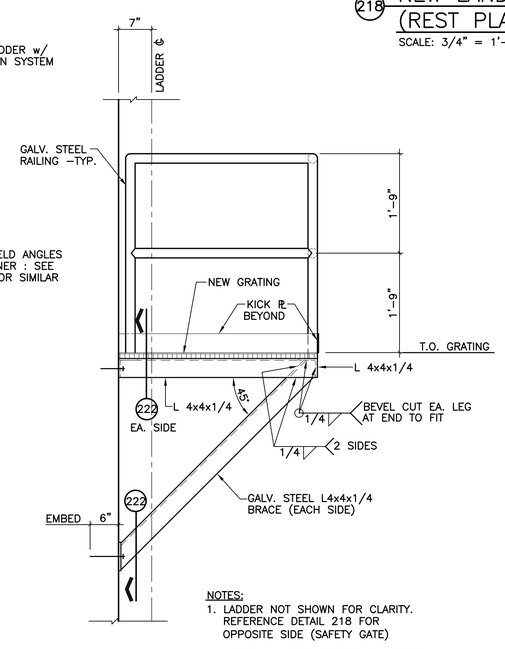

NOTES:
1. LADDER NOT SHOWN FOR CLARITY. REFERENCE DETAIL 218 FOR OPPOSITE SIDE (SAFETY GATE)
2. USE GALVANIZED STRUCTURAL STEEL

220 REST PLATFORM SECTION
SCALE: 3/4" = 1'-0"

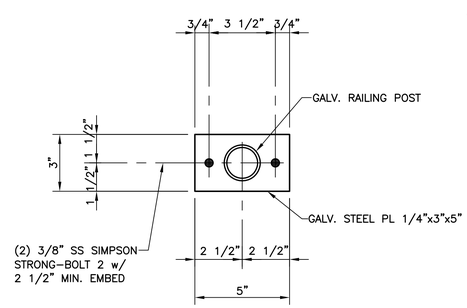

X RAILING TO CONC. WALL SECTION
SCALE: 3" = 1'-0"

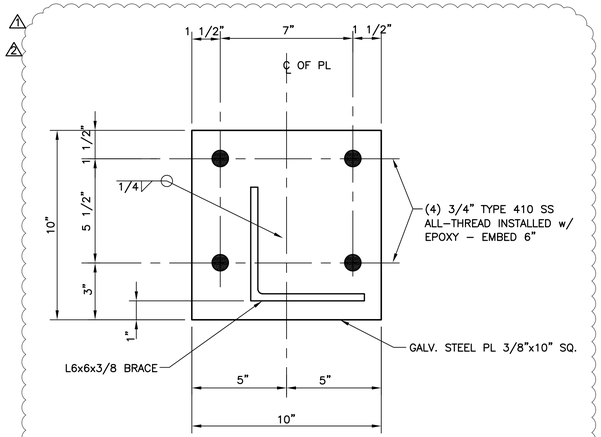

Z ANGLE BRACE TO CONC. WALL SECTION
SCALE: 3" = 1'-0"

JOSE I. GUERRA, INC.
Texas Registered Engineering Firm F-3

STATE OF TEXAS
RICARDO JOSE GUERRA
65224
REGISTERED PROFESSIONAL ENGINEER
9/19/16

KENNETH W. HANKS
97528
LICENSED PROFESSIONAL ENGINEER
10/17/16

FREESE and NICHOLS
10431 Morado Circle, Suite 300
Austin, Texas 78759
Phone – (512) 617-3100
Fax – (512) 617-3101
Freese and Nichols, Inc.
Texas Registered Engineering Firm F-2144

Jose I. Guerra, Inc.
Consulting Engineers
8140 N. MoPac Expy., Suite 210
Austin, Texas 78759
(512) 445-2090
Structural • Civil • Mechanical • Electrical

THE CITY OF AUSTIN
FOUR POINT ELEVATED RESERVOIR IMPROVEMENTS
STRUCTURAL
LADDER, RAILING, AND GRATING
SHEET 3 OF 4

NO.	ISSUE	BY	DATE
1	RELOCATED DAVIT SLEEVE & ADDED BRACE	RH	9-19-16
2	ADDENDUM #1	KWH	10/17/16

F&N JOB NO.	AU116177
DATE	08/15/16
DESIGNED	BB
DRAWN	RH
REVISED	RH
CHECKED	BB
FILE NAME	S5.3.dwg

VERIFY SCALE Bar is one inch on original drawing. If not one inch on this sheet, adjust scale.

SHEET S5.3
SEQ. –

ACAD Rel 18.2a (LMS Tech) User: 02160
FSAM17.04 UTC:\USERS\02160\DESKTOP\AUSTIN\34BORDER.DWG LAYOUT: Model
09/17/2012 11:16:33 P.M. LTS: 1 PSLTS: 1

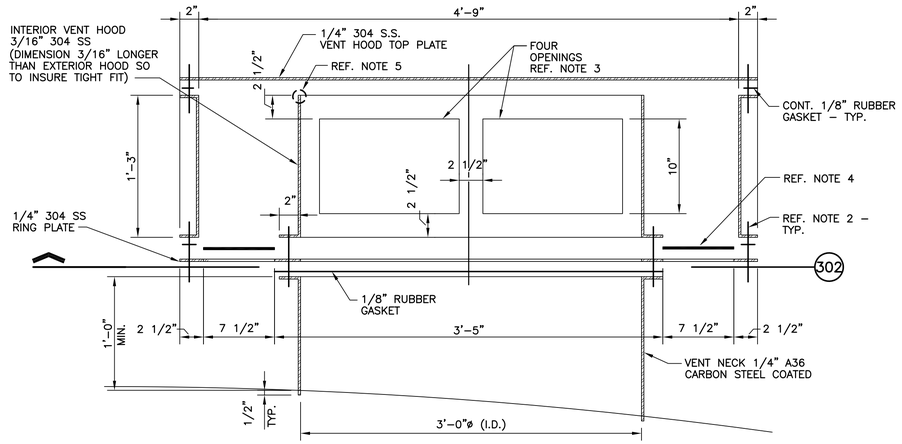

NOTES:

1. VENT NECK TO EXTEND 1/2" BEYOND TANK ROOF OR DOLLAR PLATE ON THE INTERIOR AND 12" MIN. ON THE EXTERIOR.
2. PROVIDE 3/8"ø STAINLESS STEEL BOLTS, FLAT WASHERS, DIELECTRIC WASHERS AND LOCK NUTS.
3. THESE FOUR OPENINGS ARE TO BE WRAPPED IN 16 MESH, 304 SS, 0.018" SCREEN, TO EXTEND 1 1/2" ABOVE AND BELOW THE OPENINGS. THE SCREEN SHOULD OVERLAP BY 3" AT ONE OF THE 4 VERTICAL MEMBERS. SCREEN TO BE STRAPPED DOWN WITH 1/2"x0.030" 304 SS BAND OR HOSE CLAMP AT TOP AND BOTTOM.
4. 10 GA., 2 MESH, LOCK CRIMP, 304 SS WIRE CLOTH. CUT INTO A RING THAT WILL OVERLAP OPENING IN RING PLATE 1/2" ALL AROUND AND IS WELDED ALL AROUND TO RING PLATE.
5. INSTALL U–CHANNEL EXTRUDED RUBBER GASKET BETWEEN INTERIOR AND EXTERIOR HOODS.
6. FIELD VERIFY ALL EXISTING DIMENSIONS.

301 VENT SECTION
SCALE: 1 1/2" = 1'–0"

Addendum No. 1

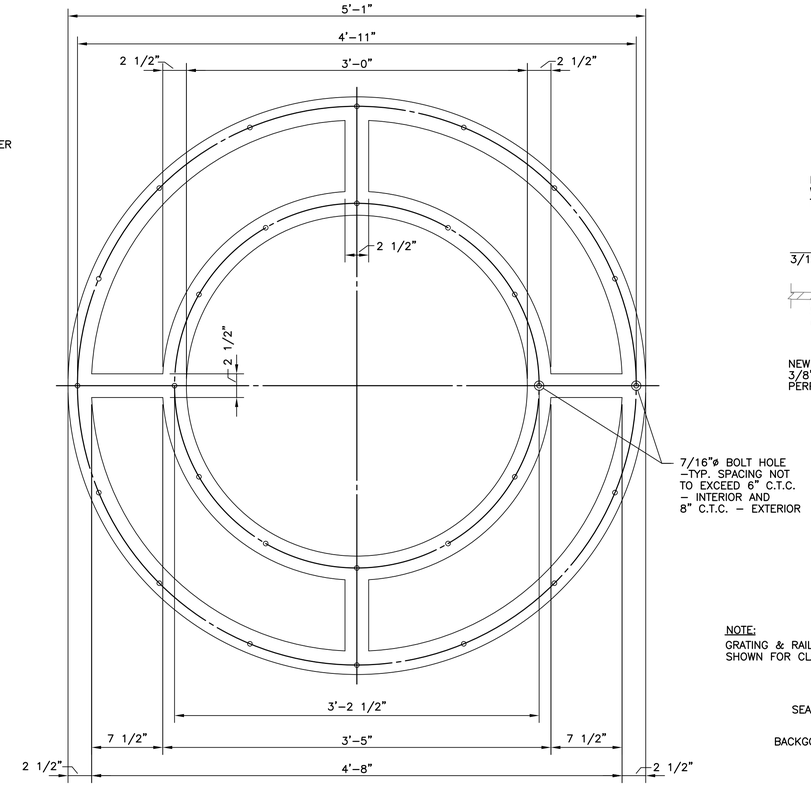

302 RING PLATE PLAN FROM BOTTOM
SCALE: 1 1/2" = 1'–0"

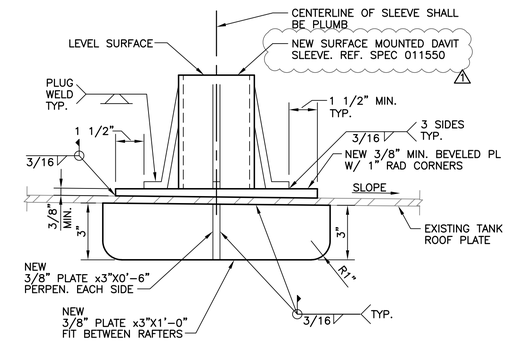

303 HOIST MOUNT
SCALE: 1 1/2" = 1'–0"

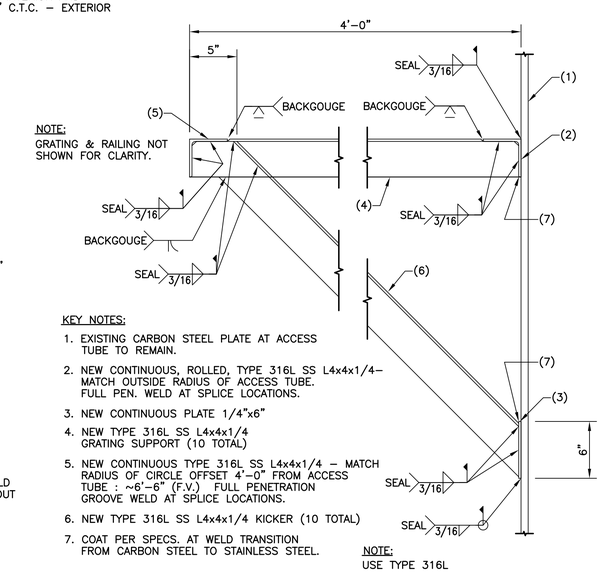

NOTE:
GRATING & RAILING NOT SHOWN FOR CLARITY.

KEY NOTES:

1. EXISTING CARBON STEEL PLATE AT ACCESS TUBE TO REMAIN.
2. NEW CONTINUOUS, ROLLED, TYPE 316L SS L4x4x1/4– MATCH OUTSIDE RADIUS OF ACCESS TUBE. FULL PEN. WELD AT SPLICE LOCATIONS.
3. NEW CONTINUOUS PLATE 1/4"x6"
4. NEW TYPE 316L SS L4x4x1/4 GRATING SUPPORT (10 TOTAL)
5. NEW CONTINUOUS TYPE 316L SS L4x4x1/4 – MATCH RADIUS OF CIRCLE OFFSET 4'–0" FROM ACCESS TUBE : ~6'–6" (F.V.) FULL PENETRATION GROOVE WELD AT SPLICE LOCATIONS.
6. NEW TYPE 316L SS L4x4x1/4 KICKER (10 TOTAL)
7. COAT PER SPECS. AT WELD TRANSITION FROM CARBON STEEL TO STAINLESS STEEL.

NOTE:
USE TYPE 316L

307 CROW'S NEST FRAMING DETAIL
SCALE: 1 1/2" = 1'–0"

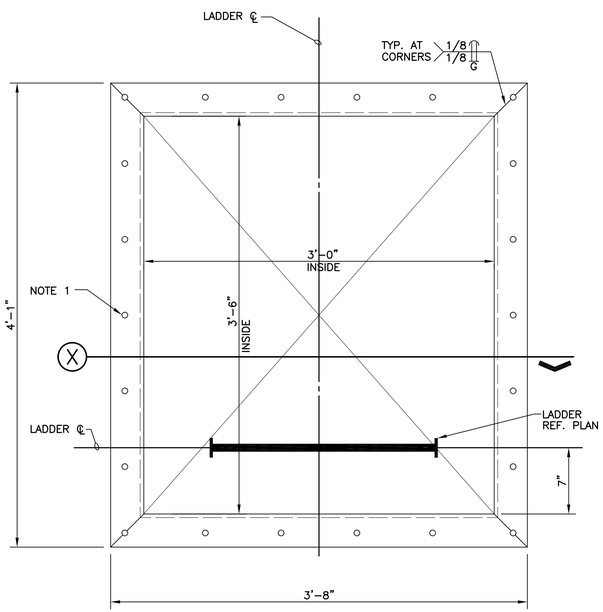

NOTE:

1. BOLT SPACING IS NOT TO EXCEED 8" O.C.
2. NEW HATCH RAIL SYSTEM NOT SHOWN FOR CLARITY.

304 NEW ROOF HATCH PLAN
SCALE: 1 1/2" = 1'–0"

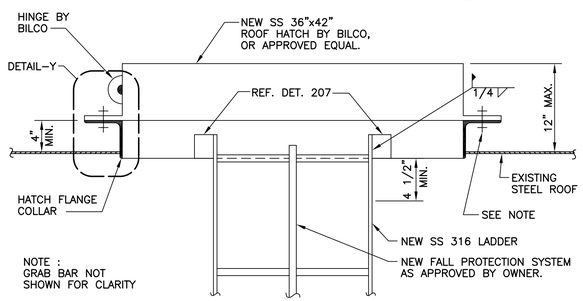

X SECTION: NEW HATCH
SCALE: 1 1/2" = 1'–0"

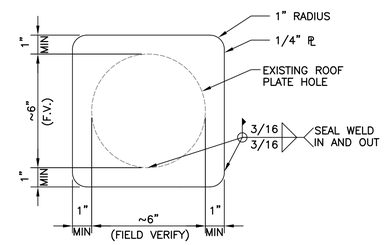

NOTES:

1. REF. ELEC. PLANS FOR NEW, CAPPED, AND REUSED HAND HOLES FOR CATHODIC PROTECTION SYSTEM MODIFICATIONS.
2. GRIND SMOOTH SHARP EDGES AND SLAG IN AND OUT TO SUCCESSFULLY ACCEPT COATING.
3. COVER PLATES SHALL BE WELDED TO THE EXTERIOR & INTERIOR OF THE TANK.

305 ROOF HOLE COVER PLATE
SCALE : 3/4" = 1'–0"

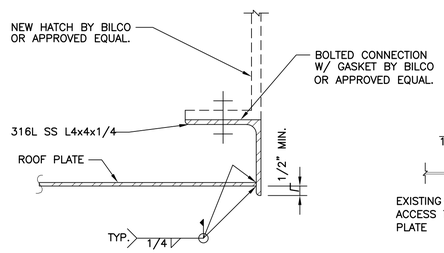

Y DETAIL
SCALE: 3" = 1'–0"

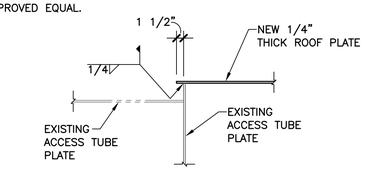

306 SECTION
SCALE: 3/4" = 1'–0"

NOTE:

1. GRATING NOT SHOWN FOR CLARITY.

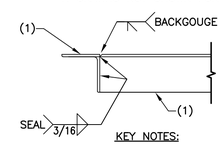

KEY NOTES:

1. NEW SS L 4x4x1/4

308 SUPPORT ANGLE AT HATCH
SCALE: 1 1/2" = 1'–0"

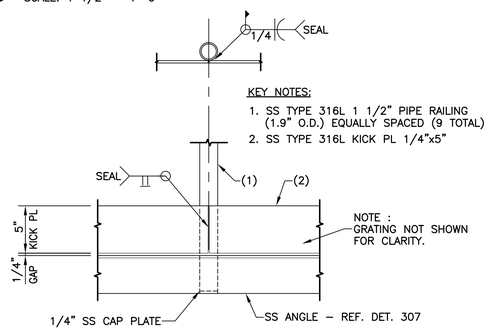

KEY NOTES:

1. SS TYPE 316L 1 1/2" PIPE RAILING (1.9" O.D.) EQUALLY SPACED (9 TOTAL)
2. SS TYPE 316L KICK PL 1/4"x5"

309 HANDRAIL AT KICK PLATE
SCALE: 1 1/2" = 1'–0"

JOSE I. GUERRA, INC.
Texas Registered Engineering Firm F–3

JOSE I. GUERRA, INC. Consulting Engineers 8140 N. Mopac Expy. Suite 210 Austin, Texas 78759 (512) 445-2090 Structural • Civil • Mechanical • Electrical

FREESE AND NICHOLS
10431 Morado Circle, Suite 300
Austin, Texas 78759
Phone – (512) 617–3100
Fax – (512) 617–3101
Freese and Nichols, Inc.
Texas Registered Engineering Firm F–2144

THE CITY OF AUSTIN
FOUR POINT ELEVATED RESERVOIR IMPROVEMENTS
STRUCTURAL
MISC. TANK DETAILS
SHEET 1 OF 2

NO.	ISSUE	BY	DATE
1	ADDENDUM #1	KWH	10/17/16

FAM JOB NO. AU116177
DATE 08/15/16
DESIGNED BB
DRAWN RH
REVISED RH
CHECKED BB
FILE NAME S6.1.dwg

VERIFY SCALE Bar is one inch on original drawing. If not one inch on this sheet, adjust scale.
0 1

SHEET S6.1
SEQ. –

ACAD Rel 18.2s (LMS Tech) User: 02160
SAM12041(C:\USERS\02160\DESKTOP\AUSTIN\34BORDER.DWG LAYOUT: Model
SAM12041 10/17/2016 1:16:33 P.M. LTS: 1 PSLTS: 1

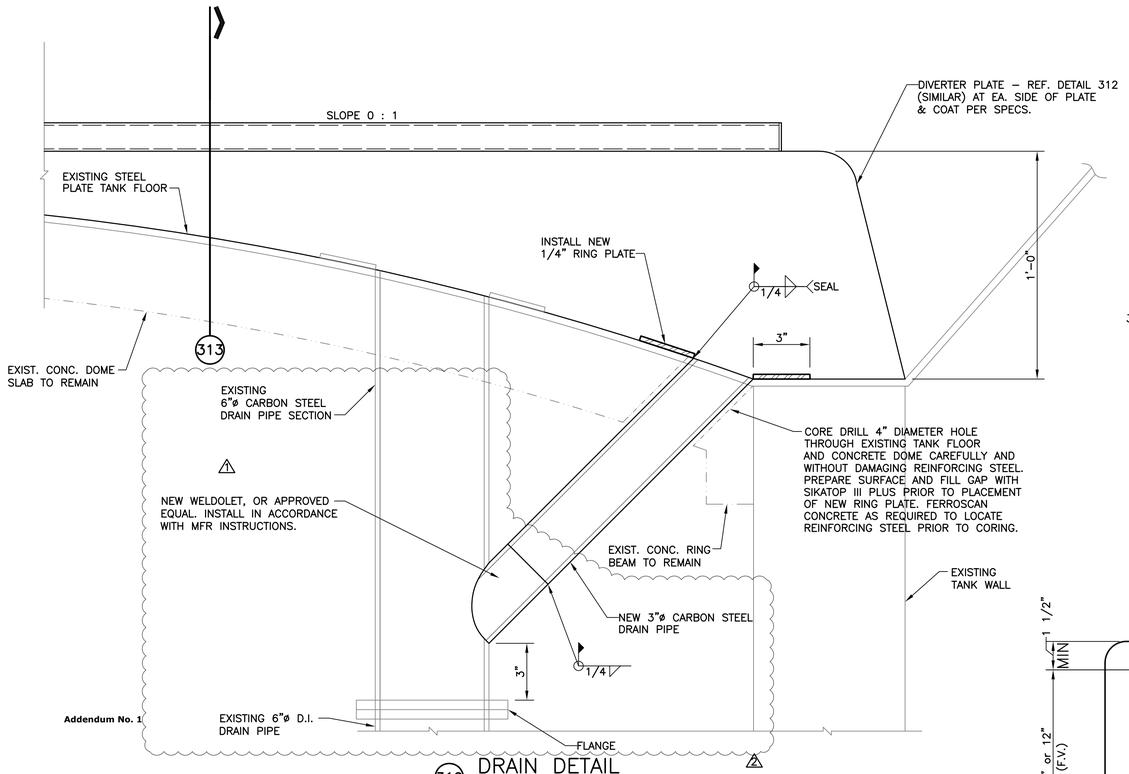

310 DRAIN DETAIL
SCALE: 3" = 1'-0"

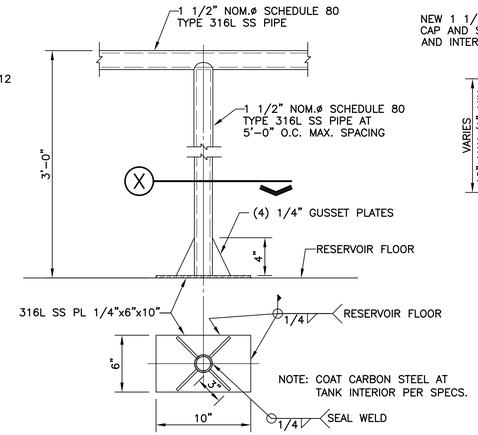

X PLAN SECTION

311 HANDRAIL AT RESERVOIR FLOOR
SCALE: 1 1/2" = 1'-0"

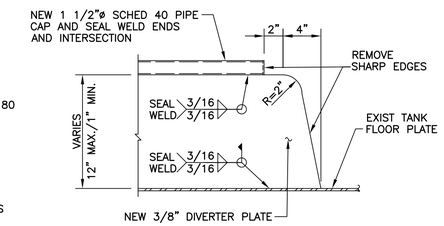

312 DETAIL
SCALE: 1 1/2" = 1'-0"

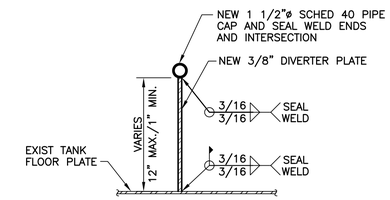

313 DETAIL
SCALE: 1 1/2" = 1'-0"

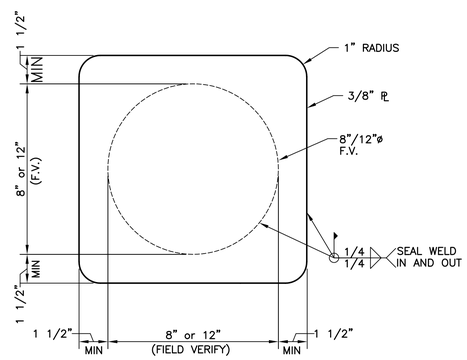

NOTES:
1. GRIND SMOOTH SHARP EDGES AND SLAG IN AND OUT TO SUCCESSFULLY ACCEPT COATING.
2. COVER PLATES SHALL BE WELDED TO THE INTERIOR OF THE TANK.

315 PIPE PENETRATION PLATE
SCALE: 3" = 1'-0"

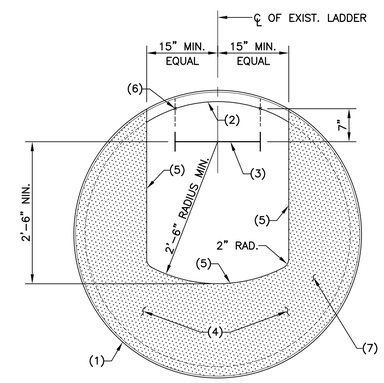

KEY NOTES
1. EXISTING DRY ACCESS TUBE WALL TO REMAIN.
2. EXISTING PLATE SUPPORT ANGLE TO REMAIN.
3. NEW GALVANIZED LADDER : REF. APPLICABLE DETAIL.
4. EXISTING STEEL PLATE.
5. GRIND EDGES SMOOTH TO RADIUS OF APPROXIMATELY 1/2 THE EXISTING PLATE THICKNESS – SEE NOTE.
6. PROJECTED POINT FROM LADDER SIDE RAILS – EACH SIDE – FOR DIMENSIONING PURPOSES.
7. INSTALL SLIP-RESISTANT COATING. SEE COATING SPECS. FOR MORE INFORMATION.

NOTE
CAREFULLY CUT EXISTING PLATE TO MIN. DIMENSIONS INDICATED AS REQUIRED PRIOR TO ROUNDING EDGES. PERFORM WITHOUT OVER CUTTING AND WITHOUT DAMAGING EXISTING MEMBERS.

317 SECTION @ DRY ACCESS TUBE AT PLATE MANWAY
SCALE: 3/4" = 1'-0"

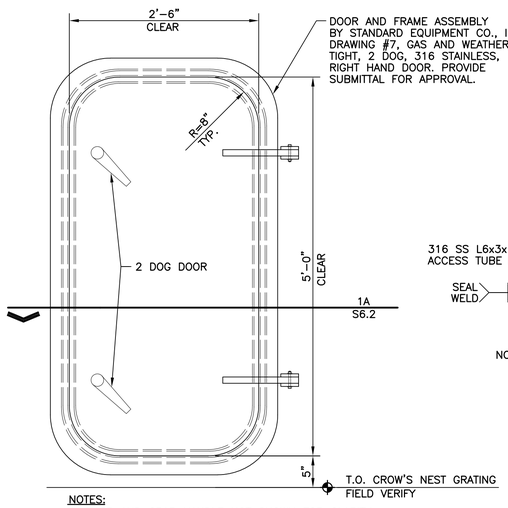

NOTES:
1. HASP AND GRAB HANDLE NOT SHOWN FOR CLARITY.
2. STANDARD EQUIPMENT CO., INC. CONTACT #: 800-239-3442.
3. THE EXISTING OPENING DIMENSIONS ARE NOT NECESSARILY THAT OF THOSE SHOWN ABOVE.

314 DOOR AT CROW'S NEST
SCALE: 1" = 1'-0"

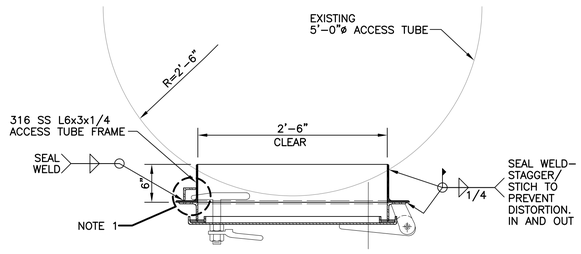

NOTE:
AT EACH DOG, A SECTION OF THE 6" AND 3" LEG OF THE ACCESS TUBE FRAME WILL NEED TO BE REMOVED FOR THE WEDGE CLOSURE OF THE DOOR ASSEMBLY. THE REMOVED AREA WILL NEED TO BE "BOXED" IN SO THAT THE ACCESS TUBE FRAME IS SEALED. (BOTH SIDES, TOP AND BOT.)

1A SECTION
SCALE: 1" = 1'-0"

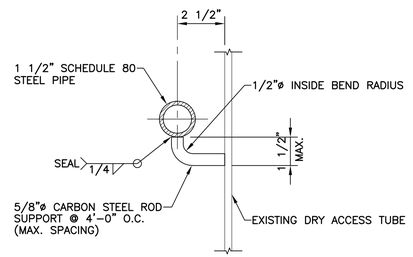

SECTION AT SUPPORT

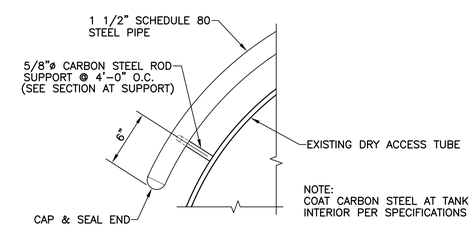

PLAN VIEW AT END

316 TANK FLOOR HANDRAIL SUPPORTS @ DRY ACCESS TUBE
SCALE: 3" = 1'-0"

JOSE I. GUERRA, INC.
Texas Registered Engineering Firm F-3

STATE OF TEXAS
RICARDO JOSE GUERRA
65224
REGISTERED PROFESSIONAL ENGINEER
9/19/16

STATE OF TEXAS
KENNETH W. HANKS
97528
LICENSED PROFESSIONAL ENGINEER
10/17/16

FREESE AND NICHOLS
10431 Morado Circle, Suite 300
Austin, Texas 78759
Phone – (512) 617-3100
Fax – (512) 617-3101
Freese and Nichols, Inc.
Texas Registered Engineering Firm F-2144

Jose I. Guerra, Inc.
Consulting Engineers
8000 N. Mopac Expy., Suite 210
Austin, Texas 78759
(512) 445-2090
Structural • Civil • Mechanical • Electrical

THE CITY OF AUSTIN
FOUR POINT ELEVATED RESERVOIR IMPROVEMENTS
STRUCTURAL
MISC. TANK DETAILS
SHEET 2 OF 2

NO.	ISSUE	BY	DATE
1	REVISED DRAIN DETAIL 310	RH	9-19-16
2	ADDENDUM #1	KWH	10/17/16

FAM JOB NO. AU116177
DATE 08/15/16
DESIGNED BB
DRAWN RH
REVISED RH
CHECKED BB
FILE NAME S6.2.dwg

VERIFY SCALE Bar is one inch on original drawing. If not one inch on this sheet, adjust scale.
0 1

SHEET S6.2
SEQ. –

ACAD Rel 18.2s (LMS Tech) User: 02160
SAM12 for JC:\USERS\02160\DESKTOP\AUSTIN\34BORDER.DWG LAYOUT: Model
05/17/2012 1:16:33 P.M. LTS: 1 PSLTS: 1

Date: Oct 17, 2016 – 3:00pm User: gfrey File: F:\16013_COA Four Points EST Repairs\DRAWINGS\CAD\S6.2.dwg