CITY OF AUSTIN

SOUTH AUSTIN REGIONAL WASTEWATER TREATMENT PLANT ELECTRICAL SUBSTATION NO. 1 REPLACEMENT

1017 FALWELL LANE DEL VALLE, TEXAS 78617

VOLUME 4 OF 4

AUSTIN CITY COUNCIL

STEVE ADLER, MAYOR

DELIA GARZA , MAYOR PRO TEM

NATASHA HARPER-MADISON — JIMMY FLANNIGAN

SABINO RENTERIA — LESLIE POOL

GREGORIO CASAR — PAIGE ELLIS

ANN KITCHEN — ALISON ALTER — KATHIE TOVO

CITY MANAGER

SPENCER CRONK

DIRECTOR, AUSTIN WATER

GREG MESZAROS

LOCATION MAP (N.T.S.)

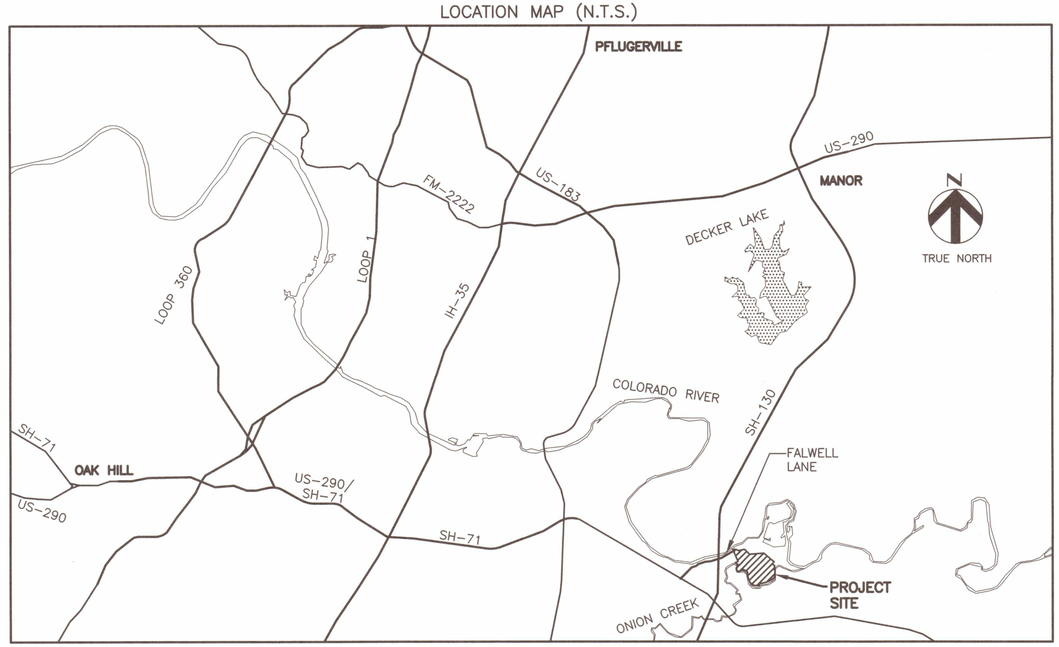

SUBMITTED FOR REVIEW BY:

K. A. HARUTUNIAN, 59181, STATE OF TEXAS, REGISTERED PROFESSIONAL ENGINEER

10/7/2019

KEGHAM A. HARUTUNIAN, P.E. — DATE
HARUTUNIAN ENGINEERING, INC.

ANNE H. HARUTUNIAN, 115716, STATE OF TEXAS, REGISTERED PROFESSIONAL ENGINEER

10/7/2019

ANNE H. HARUTUNIAN, P.E. — DATE
HARUTUNIAN ENGINEERING, INC.

SHANT HARUTUNIAN, 87735, STATE OF TEXAS, REGISTERED PROFESSIONAL ENGINEER

10/7/2019

SHANT HARUTUNIAN, P.E. — DATE
HARUTUNIAN ENGINEERING, INC.

REVIEWED BY:

10/7/19

MATTHEW SCHARF, PROJECT SPONSOR — DATE
AUSTIN WATER

10/7/19

GARY JACKSON — DATE
PUBLIC WORKS DEPARTMENT, PROJECT MANAGER DIVISION

SP-2018-0189C — 7/3/2019

SITE PLAN/DEVELOPMENT PERMIT NUMBER — DATE

PREPARED BY:

HARUTUNIAN ENGINEERING, INC.

ENGINEERING & ENVIRONMENTAL CONSULTANTS
8100 CROSS PARK DRIVE
AUSTIN, TX 78754
TEL: (512) 454-2788 FAX: (512) 454-6434
TEXAS FIRM REGISTRATION NUMBER F-2408
WWW.HEIWORLD.COM

IN ASSOCIATION WITH

AECOM TECHNICAL SERVICES, INC.
CAS CONSULTING & SERVICES, INC.
HVJ ASSOCIATES, INC.
JOSE I. GUERRA, INC.
MACIAS & ASSOCIATES, L.P.
MWM DESIGN GROUP

C.I.P PROJECT NO. 3333.032
CLMC 739

DRAWING NUMBERING SYSTEM

DRAWING NUMBER EXAMPLE: G – G – 001

- AREA DESIGNATOR
- DISCIPLINE
- ② SEQUENCE NUMBER

AREA DESIGNATOR ①	AREA DESCRIPTION
A	GENERAL CIVIL
B	SITE CIVIL AND PROFILES
G	GENERAL
AD	ADMINISTRATION BUILDING
BBC1	BLOWER BUILDING TRAIN C
DCL	DECHLORINATION BUILDING
EBB	ELECTRICAL BUILDING B
FB1	FILTER FACILITIES
FEBA	FLOW EQUALIZATION BUILDING TRAIN A
FEBB	FLOW EQUALIZATION BUILDING TRAIN B
JCLY	JIMMY CLAY PUMP STATION
LS1	LIFT STATION NO. 1
LS2	LIFT STATION NO. 2
MB1	MAINTENANCE BUILDING NO. 1
MB2	MAINTENANCE BUILDING NO. 2
PT1	PRELIMINARY TREATMENT BUILDING TRAIN A
PT2	PRELIMINARY TREATMENT BUILDING TRAIN B
PTC1	PRIMARY TREATMENT COMPLEX TRAIN C
S	SITE
STPB	SLUDGE TRANSFER PUMP BUILDING
SSL1	SECONDARY SLUDGE PUMP BUILDING TRAIN A
SSL2	SECONDARY SLUDGE PUMP BUILDING TRAIN B
SSC1	SECONDARY SLUDGE PUMP BUILDING TRAIN C
STB	SECONDARY TREATMENT BUILDING
T	REFERENCE DRAWING
TD	TYPICAL/STANDARD DETAILS
ESUB1	EXISTING ELECTRICAL SUBSTATION NO. 1
SUB1	PROPOSED ELECTRICAL SUBSTATION NO. 1
SUB2	ELECTRICAL SUBSTATION NO. 2
UPB	UTILITY PUMP BUILDING
WR	WATER REUSE STATION

DISCIPLINE	
G	GENERAL
IOS	INDEX OF SHEETS
COV	COVER
A	ARCHITECTURAL
C	CIVIL
D	DIMENSIONAL CONTROL
E	ELECTRICAL
H	HVAC
I	INSTRUMENTATION
M	MECHANICAL
P	PLUMBING
S	STRUCTURAL
U	SITE ELECTRICAL DUCTBANK (CIVIL)

GENERAL SYMBOLS

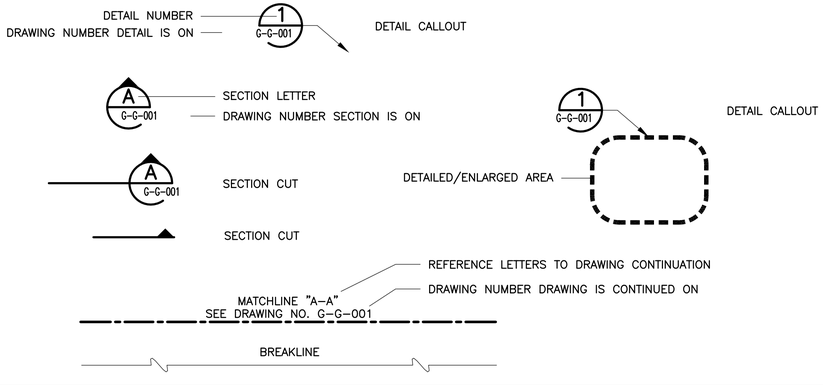

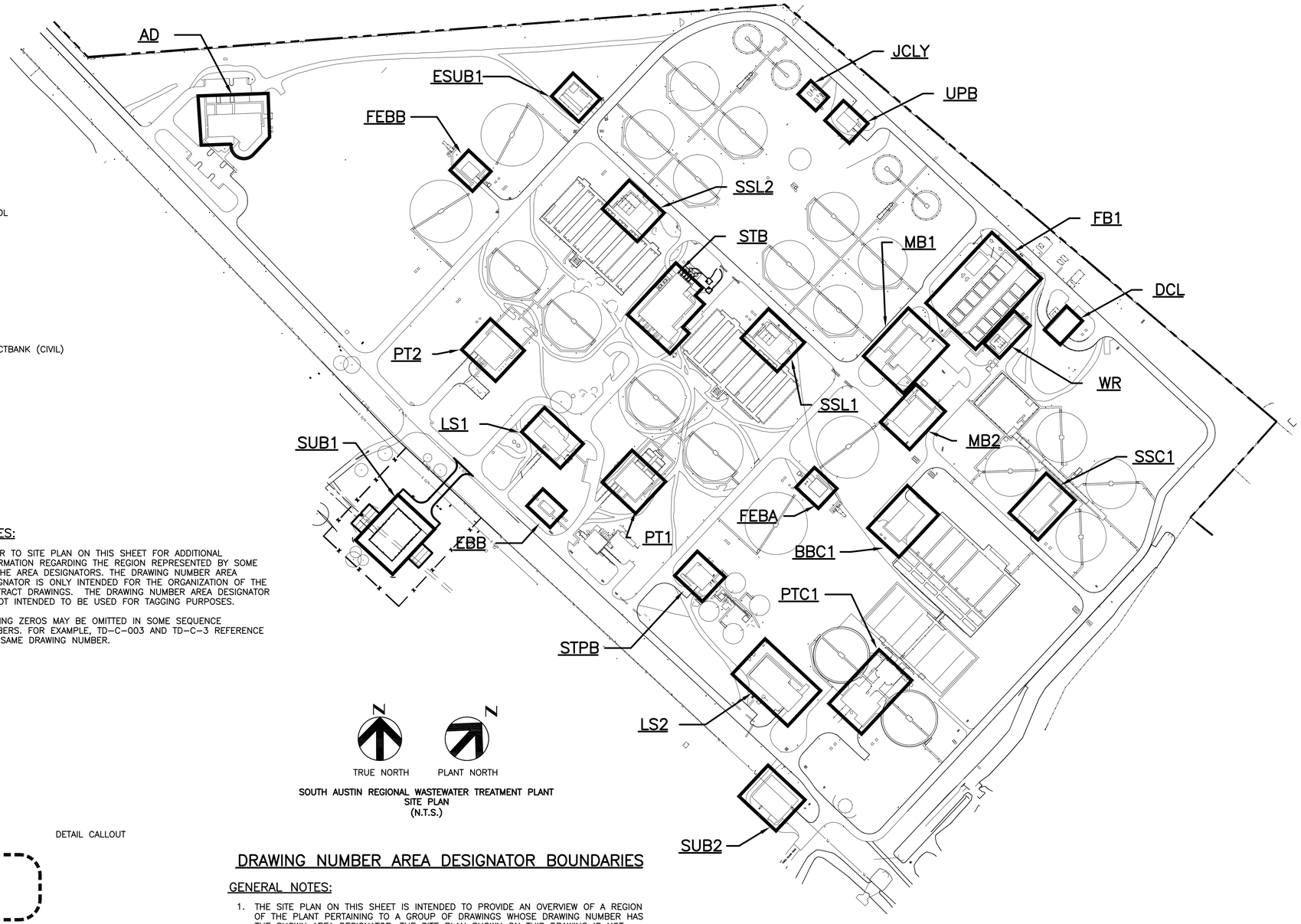

SOUTH AUSTIN REGIONAL WASTEWATER TREATMENT PLANT
SITE PLAN
(N.T.S.)

KEY NOTES:

① REFER TO SITE PLAN ON THIS SHEET FOR ADDITIONAL INFORMATION REGARDING THE REGION REPRESENTED BY SOME OF THE AREA DESIGNATORS. THE DRAWING NUMBER AREA DESIGNATOR IS ONLY INTENDED FOR THE ORGANIZATION OF THE CONTRACT DRAWINGS. THE DRAWING NUMBER AREA DESIGNATOR IS NOT INTENDED TO BE USED FOR TAGGING PURPOSES.

② LEADING ZEROS MAY BE OMITTED IN SOME SEQUENCE NUMBERS. FOR EXAMPLE, TD-C-003 AND TD-C-3 REFERENCE THE SAME DRAWING NUMBER.

DRAWING NUMBER AREA DESIGNATOR BOUNDARIES

GENERAL NOTES:

1. THE SITE PLAN ON THIS SHEET IS INTENDED TO PROVIDE AN OVERVIEW OF A REGION OF THE PLANT PERTAINING TO A GROUP OF DRAWINGS WHOSE DRAWING NUMBER HAS THE SHOWN AREA DESIGNATOR. THE SITE PLAN SHOWN ON THIS DRAWING IS NOT INTENDED FOR CONSTRUCTION.

BAR LENGTH ON ORIGINAL DRAWING EQUALS ONE INCH, ADJUST SCALE ACCORDINGLY.

REUSE OF DOCUMENTS

This document, and the designs incorporated herein, is an instrument of professional service that has been developed, designed and prepared by Harutunian Engineering, Inc., and is not to be used, in whole or in part, for any other project without giving written notice to Harutunian Engineering, Inc.

NO.	DATE:	DESCRIPTION

HARUTUNIAN ENGINEERING INCORPORATED
TEXAS FIRM REGISTRATION NUMBER F-2408
ENGINEERING AND ENVIRONMENTAL CONSULTANTS
8100 CROSS PARK DRIVE
AUSTIN, TEXAS 78754

STATE OF TEXAS · SHANT HARUTUNIAN · 87735 · REGISTERED PROFESSIONAL ENGINEER · 10/7/2019

DESIGNED BY:	HEI
CHECKED BY:	HEI
APPROVED BY:	HEI
SUBMITTAL DATE:	OCTOBER 2019
SCALE:	AS SHOWN

SOUTH AUSTIN REGIONAL WASTEWATER TREATMENT PLANT
ELECTRICAL SUBSTATION NO. 1 REPLACEMENT PROJECT
CIP I.D.# 3333.032

GENERAL LEGEND

PROJECT NO: 2014-300 | SHT. 569 OF 866 | DWG NO. G-G-001

Volume 1

SHEET NO.	DRAWING NO.	TITLE
1	G-COV-001	COVER SHEET VOLUME 1
2	G-G-001	GENERAL LEGEND
3	G-IOS-001	INDEX OF SHEETS (SHEET 1 OF 6)
4	G-IOS-002	INDEX OF SHEETS (SHEET 2 OF 6)
5	G-IOS-003	INDEX OF SHEETS (SHEET 3 OF 6)
6	G-IOS-004	INDEX OF SHEETS (SHEET 4 OF 6)
7	G-IOS-005	INDEX OF SHEETS (SHEET 5 OF 6)
8	G-IOS-006	INDEX OF SHEETS (SHEET 6 OF 6)
9	G-C-001	PROPERTY BOUNDARY
10	G-C-037	SUBSTATION SITE PLAN
11	G-C-100	DRAINAGE AREA MAP AND DETENTION PLAN
12	G-C-137	WATER QUALITY CONTROL PLAN
13	G-S-001	STRUCTURAL GENERAL NOTES SHEET 1 OF 3
14	G-S-002	STRUCTURAL GENERAL NOTES SHEET 2 OF 3
15	G-S-003	STRUCTURAL GENERAL NOTES SHEET 3 OF 3
16	G-H-001	HVAC SYMBOLS LEGEND
17	G-E-001	ELECTRICAL SYMBOLS LEGEND (SHEET 1 OF 4)
18	G-E-002	ELECTRICAL SYMBOLS LEGEND (SHEET 2 OF 4)
19	G-E-003	ELECTRICAL SYMBOLS LEGEND (SHEET 3 OF 4)
20	G-E-004	ELECTRICAL SYMBOLS LEGEND (SHEET 4 OF 4)
21	G-E-005	ELECTRICAL GENERAL NOTES (SHEET 1 OF 2)
22	G-E-006	ELECTRICAL GENERAL NOTES (SHEET 2 OF 2)
23	G-E-007	OVERALL SITE LOCATION PLAN – EXISTING
24	G-E-008	CONDUIT/WIRE SCHEDULE – EXISTING (SHEET 1 OF 2)
25	G-E-009	CONDUIT/WIRE SCHEDULE – EXISTING (SHEET 2 OF 2)
26	G-E-010	OVERALL SITE LOCATION PLAN – DEMOLITION
27	G-E-011	CONDUIT/WIRE SCHEDULE – DEMOLITION (SHEET 1 OF 2)
28	G-E-012	CONDUIT/WIRE SCHEDULE – DEMOLITION (SHEET 2 OF 2)
29	G-E-013	OVERALL SITE LOCATION PLAN – RENOVATION
30	G-E-014	CONDUIT/WIRE SCHEDULE – RENOVATION (SHEET 1 OF 4)
31	G-E-015	CONDUIT/WIRE SCHEDULE – RENOVATION (SHEET 2 OF 4)
32	G-E-016	CONDUIT/WIRE SCHEDULE – RENOVATION (SHEET 3 OF 4)
33	G-E-017	CONDUIT/WIRE SCHEDULE – RENOVATION (SHEET 4 OF 4)
34	G-E-018	TYPICAL PLC I/O WIRING SCHEMATICS
35	G-E-019	EXISTING MEDIUM VOLTAGE CABLE IDENTIFICATION SCHEDULE (SHEET 1 OF 2)
36	G-E-020	EXISTING MEDIUM VOLTAGE CABLE IDENTIFICATION SCHEDULE (SHEET 2 OF 2)
37	G-E-021	EXISTING MEDIUM VOLTAGE EQUIPMENT IDENTIFICATION SCHEDULE (SHEET 1 OF 4)
38	G-E-022	EXISTING MEDIUM VOLTAGE EQUIPMENT IDENTIFICATION SCHEDULE (SHEET 2 OF 4)
39	G-E-023	EXISTING MEDIUM VOLTAGE EQUIPMENT IDENTIFICATION SCHEDULE (SHEET 3 OF 4)
40	G-E-024	EXISTING MEDIUM VOLTAGE EQUIPMENT IDENTIFICATION SCHEDULE (SHEET 4 OF 4)
41	G-I-001	INSTRUMENTATION & CONTROL P&ID SYMBOLS LEGEND (SHEET 1 OF 2)
42	G-I-002	INSTRUMENTATION & CONTROL P&ID SYMBOLS LEGEND (SHEET 2 OF 2)
43	G-I-003	INSTRUMENTATION & CONTROLS GENERAL NOTES AND CONTROL SYSTEM ARCHITECTURE LEGEND
44	A-G-022	LOCATION KEYMAP AND CONSTRUCTION ACCESS
45	A-G-099	GENERAL CONSTRUCTION NOTES (SHEET 1 OF 2)
46	A-G-100	GENERAL CONSTRUCTION NOTES (SHEET 2 OF 2)
47	A-G-101	GENERAL CIVIL LEGEND AND SYMBOLS
48	A-G-102	MECHANICAL LEGEND
49	A-G-103	STANDARD ABBREVIATIONS
50	A-D-017	DIMENSIONAL CONTROL PLAN
51	A-D-027	DIMENSIONAL CONTROL PLAN
52	A-D-037	DIMENSIONAL CONTROL PLAN
53	A-D-038	DIMENSIONAL CONTROL PLAN
54	A-D-039	DIMENSIONAL CONTROL PLAN
55	A-D-045	DIMENSIONAL CONTROL PLAN
56	A-D-046	DIMENSIONAL CONTROL PLAN
57	A-D-047	DIMENSIONAL CONTROL PLAN
58	A-D-050	DIMENSIONAL CONTROL PLAN
59	A-D-051	DIMENSIONAL CONTROL PLAN
60	A-D-052	DIMENSIONAL CONTROL PLAN
61	A-D-057	DIMENSIONAL CONTROL PLAN
62	A-D-058	DIMENSIONAL CONTROL PLAN
63	A-C-027	EROSION CONTROL SHEET 1
64	A-C-037	EROSION CONTROL SHEET 2
65	A-C-038	EROSION CONTROL SHEET 3
66	A-C-039	EROSION CONTROL SHEET 4
67	A-C-045	EROSION CONTROL SHEET 5
68	A-C-046	EROSION CONTROL SHEET 6
69	A-C-047	EROSION CONTROL SHEET 7
70	A-C-050	EROSION CONTROL SHEET 8
71	A-C-051	EROSION CONTROL SHEET 9
72	A-C-052	EROSION CONTROL SHEET 10
73	A-C-057	EROSION CONTROL SHEET 11
74	A-C-058	EROSION CONTROL SHEET 12
75	A-L-001	LANDSCAPE AND IRRIGATION NOTES
76	A-L-002	RAIN GARDEN PLANTING PLAN
77	A-L-003	REVEGETATION PLAN
78	T-C-001	REFERENCE DRAWING
79	T-C-002	REFERENCE DRAWING
80	T-C-003	REFERENCE DRAWING
81	T-C-004	REFERENCE DRAWING
82	T-C-005	REFERENCE DRAWING
83	T-C-006	REFERENCE DRAWING
84	T-C-007	REFERENCE DRAWING
85	T-C-008	REFERENCE DRAWING
86	T-C-009	REFERENCE DRAWING
87	T-C-010	REFERENCE DRAWING
88	T-C-011	REFERENCE DRAWING
89	T-C-012	REFERENCE DRAWING
90	T-C-013	REFERENCE DRAWING
91	T-C-014	REFERENCE DRAWING
92	T-C-015	REFERENCE DRAWING
93	T-C-016	REFERENCE DRAWING
94	T-C-017	REFERENCE DRAWING

Volume 2

SHEET NO.	DRAWING NO.	TITLE
95	G-COV-002	COVER SHEET VOLUME 2
96	G-G-001	GENERAL LEGEND
97	G-IOS-001	INDEX OF SHEETS (SHEET 1 OF 6)
98	G-IOS-002	INDEX OF SHEETS (SHEET 2 OF 6)
99	G-IOS-003	INDEX OF SHEETS (SHEET 3 OF 6)
100	G-IOS-004	INDEX OF SHEETS (SHEET 4 OF 6)
101	G-IOS-005	INDEX OF SHEETS (SHEET 5 OF 6)
102	G-IOS-006	INDEX OF SHEETS (SHEET 6 OF 6)
103	S-C-037	EXCAVATION, GRADING AND PAVING PLAN
104	S-C-038	EXCAVATION, GRADING AND PAVING PLAN
105	S-C-039	EXCAVATION, GRADING AND PAVING PLAN
106	S-C-045	EXCAVATION, GRADING AND PAVING PLAN
107	S-C-051	EXCAVATION, GRADING AND PAVING PLAN
108	S-C-100	GRADING AND DRAINAGE
109	S-U-037	SITE UTILITIES – DUCT BANK (CIVIL) – EXISTING
110	S-U-038	SITE UTILITIES – DUCT BANK (CIVIL) – EXISTING
111	S-U-039	SITE UTILITIES – DUCT BANK (CIVIL) – EXISTING
112	S-U-045	SITE UTILITIES – DUCT BANK (CIVIL) – EXISTING
113	S-U-051	SITE UTILITIES – DUCT BANK (CIVIL) – EXISTING
114	S-U-137	SITE UTILITIES – DUCT BANKS (CIVIL) – DEMOLITION
115	S-U-145	SITE UTILITIES – DUCT BANKS (CIVIL) – DEMOLITION
116	S-U-151	SITE UTILITIES – DUCT BANKS (CIVIL) – DEMOLITION
117	S-U-237	SITE UTILITIES – DUCT BANK (CIVIL) – PROPOSED
118	S-U-238	SITE UTILITIES – DUCT BANK (CIVIL) – PROPOSED
119	S-U-239	SITE UTILITIES – DUCT BANK (CIVIL) – PROPOSED
120	S-U-245	SITE UTILITIES – DUCT BANK (CIVIL) – PROPOSED
121	S-U-251	SITE UTILITIES – DUCT BANK (CIVIL) – PROPOSED
122	S-U-401	SITE ELECTRICAL DUCT BANK ~ PROFILES
123	S-U-402	SITE ELECTRICAL DUCT BANK ~ PROFILES
124	S-U-403	SITE ELECTRICAL DUCT BANK ~ PROFILES
125	S-U-404	SITE ELECTRICAL DUCT BANK ~ PROFILES
126	S-U-405	SITE ELECTRICAL DUCT BANK ~ PROFILES
127	S-U-406	SITE ELECTRICAL DUCT BANK ~ PROFILES
128	S-U-407	SITE ELECTRICAL DUCT BANK ~ PROFILES
129	S-U-408	SITE ELECTRICAL DUCT BANK ~ PROFILES
130	S-U-409	SITE ELECTRICAL DUCT BANK ~ PROFILES
131	S-U-410	SITE ELECTRICAL DUCT BANK ~ PROFILES
132	S-U-411	SITE ELECTRICAL DUCT BANK ~ PROFILES
133	S-U-412	SITE ELECTRICAL DUCT BANK ~ PROFILES
134	S-U-413	SITE ELECTRICAL DUCT BANK ~ PROFILES
135	S-U-414	SITE ELECTRICAL DUCT BANK ~ PROFILES
136	S-U-415	SITE ELECTRICAL DUCT BANK ~ PROFILES
137	S-U-416	SITE ELECTRICAL DUCT BANK ~ PROFILES
138	S-U-417	SITE ELECTRICAL DUCT BANK ~ PROFILES
139	S-U-420	SITE ELECTRICAL DUCT BANK ~ PROFILES
140	S-U-421	SITE ELECTRICAL DUCT BANK ~ PROFILES
141	S-U-422	SITE ELECTRICAL DUCT BANK ~ PROFILES
142	S-U-423	SITE ELECTRICAL DUCT BANK ~ PROFILES
143	S-U-424	SITE ELECTRICAL DUCT BANK ~ PROFILES
144	S-U-425	SITE ELECTRICAL DUCT BANK ~ PROFILES
145	S-U-426	SITE ELECTRICAL DUCT BANK ~ PROFILES
146	S-U-427	SITE ELECTRICAL DUCT BANK ~ PROFILES
147	S-E-001	MEDIUM VOLTAGE OVERALL LOAD FLOW AND SWITCHING ONE-LINE DIAGRAM – EXISTING
148	S-E-002	MEDIUM VOLTAGE PARTIAL ENLARGED LOAD FLOW AND SWITCHING ONE-LINE DIAGRAM – EXISTING (SHEET 1 OF 3)
149	S-E-003	MEDIUM VOLTAGE PARTIAL ENLARGED LOAD FLOW AND SWITCHING ONE-LINE DIAGRAM – EXISTING (SHEET 2 OF 3)
150	S-E-004	MEDIUM VOLTAGE PARTIAL ENLARGED LOAD FLOW AND SWITCHING ONE-LINE DIAGRAM – EXISTING (SHEET 3 OF 3)
151	S-E-005	EXISTING SUBSTATION NO. 1 OVERALL ONE-LINE DIAGRAM – EXISTING
152	S-E-006	SUBSTATION NO. 2 OVERALL ONE-LINE DIAGRAM – EXISTING
153	S-E-007	PRELIMINARY TREATMENT STRUCTURE TRAIN A OVERALL ONE-LINE DIAGRAM – EXISTING
154	S-E-008	SECONDARY SLUDGE PUMP BUILDING TRAIN A OVERALL ONE-LINE DIAGRAM – EXISTING
155	S-E-009	FLOW EQUALIZATION BUILDING TRAIN A OVERALL ONE-LINE DIAGRAM – EXISTING

BAR LENGTH ON ORIGINAL DRAWING EQUALS ONE INCH, ADJUST SCALE ACCORDINGLY.

REUSE OF DOCUMENTS

This document, and the designs incorporated herein, is an instrument of professional service that has been developed, designed and prepared by Harutunian Engineering, Inc., and is not to be used, in whole or in part, for any other project without giving written notice to Harutunian Engineering, Inc.

NO.	DATE:	DESCRIPTION

HARUTUNIAN ENGINEERING INCORPORATED

TEXAS FIRM REGISTRATION NUMBER F-2408

ENGINEERING AND ENVIRONMENTAL CONSULTANTS
8100 CROSS PARK DRIVE
AUSTIN, TEXAS 78754

STATE OF TEXAS
SHANT HARUTUNIAN
87735
REGISTERED
PROFESSIONAL ENGINEER
10/7/2019

DESIGNED BY:	HEI
CHECKED BY:	HEI
APPROVED BY:	HEI
SUBMITTAL DATE:	OCTOBER 2019
SCALE:	NTS

SOUTH AUSTIN REGIONAL WASTEWATER TREATMENT PLANT
ELECTRICAL SUBSTATION NO. 1 REPLACEMENT PROJECT
CIP I.D.# 3333.032

INDEX OF SHEETS
(SHEET 1 OF 6)

PROJECT NO: 2014-300 | SHT. 570 OF 866 | DWG NO. G-IOS-001

(CONTINUED)

SHEET NO.	DRAWING NO.	TITLE
156	S-E-010	PRELIMINARY TREATMENT STRUCTURE TRAIN B OVERALL ONE-LINE DIAGRAM - EXISTING
157	S-E-011	SECONDARY SLUDGE PUMP BUILDING TRAIN B OVERALL ONE-LINE DIAGRAM - EXISTING
158	S-E-012	FLOW EQUALIZATION BUILDING TRAIN B OVERALL ONE-LINE DIAGRAM - EXISTING
159	S-E-013	PRIMARY TREATMENT COMPLEX TRAIN C OVERALL ONE-LINE DIAGRAM - EXISTING (SHEET 1 OF 2)
160	S-E-014	PRIMARY TREATMENT COMPLEX TRAIN C OVERALL ONE-LINE DIAGRAM - EXISTING (SHEET 2 OF 2)
161	S-E-015	SECONDARY SLUDGE PUMP BUILDING TRAIN C OVERALL ONE-LINE DIAGRAM - EXISTING
162	S-E-016	ADMINISTRATION BUILDING OVERALL ONE-LINE DIAGRAM - EXISTING
163	S-E-017	LIFT STATION NO. 1 OVERALL ONE-LINE DIAGRAM - EXISTING
164	S-E-018	LIFT STATION NO. 2 OVERALL ONE-LINE DIAGRAM - EXISTING
165	S-E-019	BLOWER BUILDING TRAIN C OVERALL ONE-LINE DIAGRAM - EXISTING (SHEET 1 OF 2)
166	S-E-020	BLOWER BUILDING TRAIN C OVERALL ONE-LINE DIAGRAM - EXISTING (SHEET 2 OF 2)
167	S-E-021	SECONDARY TREATMENT BUILDING OVERALL ONE-LINE DIAGRAM - EXISTING (SHEET 1 OF 2)
168	S-E-022	SECONDARY TREATMENT BUILDING OVERALL ONE-LINE DIAGRAM - EXISTING (SHEET 2 OF 2)
169	S-E-023	MAINTENANCE BUILDINGS NO. 1 AND NO. 2 OVERALL ONE-LINE DIAGRAM - EXISTING
170	S-E-024	SLUDGE TRANSFER BUILDING OVERALL ONE-LINE DIAGRAM - EXISTING
171	S-E-025	FILTER BUILDING POWER CENTER OVERALL ONE-LINE DIAGRAM - EXISTING
172	S-E-026	FILTER BUILDING OVERALL ONE-LINE DIAGRAM - EXISTING
173	S-E-027	UTILITY PUMP BUILDING OVERALL ONE-LINE DIAGRAM - EXISTING
174	S-E-028	ELECTRICAL BUILDING B OVERALL ONE-LINE DIAGRAM - EXISTING
175	S-E-029	JIMMY CLAY PUMP STATION OVERALL ONE-LINE DIAGRAM - EXISTING
176	S-E-030	DECHLORINATION BUILDING OVERALL ONE-LINE DIAGRAM - EXISTING
177	S-E-031	WATER REUSE STATION OVERALL ONE-LINE DIAGRAM - EXISTING
178	S-E-032	OVERALL SITE PLAN - EXISTING
179	S-E-033	SITE DUCTBANK PLAN - EXISTING (SHEET 1 OF 14)
180	S-E-034	SITE DUCTBANK PLAN - EXISTING (SHEET 2 OF 14)
181	S-E-035	SITE DUCTBANK PLAN - EXISTING (SHEET 3 OF 14)
182	S-E-036	SITE DUCTBANK PLAN - EXISTING (SHEET 4 OF 14)
183	S-E-037	SITE DUCTBANK PLAN - EXISTING (SHEET 5 OF 14)
184	S-E-038	SITE DUCTBANK PLAN - EXISTING (SHEET 6 OF 14)
185	S-E-039	SITE DUCTBANK PLAN - EXISTING (SHEET 7 OF 14)
186	S-E-040	SITE DUCTBANK PLAN - EXISTING (SHEET 8 OF 14)
187	S-E-041	SITE DUCTBANK PLAN - EXISTING (SHEET 9 OF 14)
188	S-E-042	SITE DUCTBANK PLAN - EXISTING (SHEET 10 OF 14)
189	S-E-043	SITE DUCTBANK PLAN - EXISTING (SHEET 11 OF 14)
190	S-E-044	SITE DUCTBANK PLAN - EXISTING (SHEET 12 OF 14)
191	S-E-045	SITE DUCTBANK PLAN - EXISTING (SHEET 13 OF 14)
192	S-E-046	SITE DUCTBANK PLAN - EXISTING (SHEET 14 OF 14)
193	S-E-047	ENLARGED SITE DUCT BANK PLAN EXISTING
194	S-E-048	DUCTBANK SECTION ELEVATIONS - EXISTING (SHEET 1 OF 7)
195	S-E-049	DUCTBANK SECTION ELEVATIONS - EXISTING (SHEET 2 OF 7)
196	S-E-050	DUCTBANK SECTION ELEVATIONS - EXISTING (SHEET 3 OF 7)
197	S-E-051	DUCTBANK SECTION ELEVATIONS - EXISTING (SHEET 4 OF 7)
198	S-E-052	DUCTBANK SECTION ELEVATIONS - EXISTING (SHEET 5 OF 7)
199	S-E-053	DUCTBANK SECTION ELEVATIONS - EXISTING (SHEET 6 OF 7)
200	S-E-054	DUCTBANK SECTION ELEVATIONS - EXISTING (SHEET 7 OF 7)
201	S-E-055	ELECTRICAL MANHOLE MH-1 ELEVATION - EXISTING
202	S-E-056	ELECTRICAL MANHOLE MH-1A ELEVATION - EXISTING
203	S-E-057	ELECTRICAL MANHOLE MH-1B ELEVATION - EXISTING
204	S-E-058	ELECTRICAL MANHOLE MH-2 ELEVATION - EXISTING
205	S-E-059	ELECTRICAL MANHOLE MH-4 ELEVATION - EXISTING
206	S-E-060	ELECTRICAL MANHOLE MH-4A ELEVATION - EXISTING
207	S-E-061	ELECTRICAL MANHOLE MH-4B ELEVATION - EXISTING
208	S-E-062	ELECTRICAL MANHOLE MH-4C ELEVATION - EXISTING
209	S-E-063	ELECTRICAL MANHOLE MH-5 ELEVATION - EXISTING
210	S-E-064	ELECTRICAL MANHOLE MH-5A ELEVATION - EXISTING
211	S-E-065	ELECTRICAL MANHOLE MH-5B ELEVATION - EXISTING
212	S-E-066	ELECTRICAL MANHOLE MH-6 ELEVATION - EXISTING
213	S-E-067	ELECTRICAL MANHOLE MH-7 ELEVATION - EXISTING
214	S-E-068	ELECTRICAL MANHOLE MH-8 ELEVATION - EXISTING
215	S-E-069	ELECTRICAL MANHOLE MH-9 ELEVATION - EXISTING
216	S-E-070	ELECTRICAL MANHOLE MH-10 ELEVATION - EXISTING
217	S-E-071	ELECTRICAL MANHOLE MH-11 ELEVATION - EXISTING
218	S-E-072	ELECTRICAL MANHOLE MH-12 ELEVATION - EXISTING
219	S-E-073	ELECTRICAL MANHOLE MH-13 ELEVATION - EXISTING
220	S-E-074	ELECTRICAL MANHOLE MH-14 ELEVATION - EXISTING
221	S-E-075	ELECTRICAL MANHOLE MH-15 ELEVATION - EXISTING
222	S-E-076	ELECTRICAL MANHOLE MH-MP1 ELEVATION - EXISTING
223	S-E-077	ELECTRICAL MANHOLE MH-MP2 ELEVATION - EXISTING
224	S-E-078	ELECTRICAL MANHOLE MH-16A ELEVATION - EXISTING
225	S-E-079	ELECTRICAL MANHOLE MH-16B ELEVATION - EXISTING
226	S-E-080	ELECTRICAL MANHOLE EMHC-1A ELEVATION - EXISTING
227	S-E-081	ELECTRICAL MANHOLE EMHC-1B ELEVATION - EXISTING
228	S-E-082	ELECTRICAL MANHOLE EMHC-2A ELEVATION - EXISTING
229	S-E-083	ELECTRICAL MANHOLE EMHC-2B ELEVATION - EXISTING
230	S-E-084	ELECTRICAL MANHOLE EMHC-3A ELEVATION - EXISTING
231	S-E-085	ELECTRICAL MANHOLE EMHC-3B ELEVATION - EXISTING
232	S-E-086	ELECTRICAL MANHOLE EMHC-4A ELEVATION - EXISTING
233	S-E-087	ELECTRICAL MANHOLE EMHC-4B ELEVATION - EXISTING
234	S-E-088	MEDIUM VOLTAGE OVERALL LOAD FLOW AND SWITCHING ONE-LINE DIAGRAM - DEMOLITION
235	S-E-089	MEDIUM VOLTAGE PARTIAL ENLARGED LOAD FLOW AND SWITCHING ONE-LINE DIAGRAM - DEMOLITION (SHEET 1 OF 3)
236	S-E-090	MEDIUM VOLTAGE PARTIAL ENLARGED LOAD FLOW AND SWITCHING ONE-LINE DIAGRAM - DEMOLITION (SHEET 2 OF 3)
237	S-E-091	MEDIUM VOLTAGE PARTIAL ENLARGED LOAD FLOW AND SWITCHING ONE-LINE DIAGRAM - DEMOLITION (SHEET 3 OF 3)
238	S-E-092	EXISTING SUBSTATION NO. 1 OVERALL ONE-LINE DIAGRAM - DEMOLITION
239	S-E-093	SUBSTATION NO. 2 OVERALL ONE-LINE DIAGRAM - DEMOLITION
240	S-E-094	PRELIMINARY TREATMENT STRUCTURE TRAIN A OVERALL ONE-LINE DIAGRAM - DEMOLITION
241	S-E-095	SECONDARY SLUDGE PUMP BUILDING TRAIN A OVERALL ONE-LINE DIAGRAM - DEMOLITION
242	S-E-096	FLOW EQUALIZATION BUILDING TRAIN A OVERALL ONE-LINE DIAGRAM - DEMOLITION
243	S-E-097	PRELIMINARY TREATMENT STRUCTURE TRAIN B OVERALL ONE-LINE DIAGRAM - DEMOLITION
244	S-E-098	SECONDARY SLUDGE PUMP BUILDING TRAIN B OVERALL ONE-LINE DIAGRAM - DEMOLITION
245	S-E-099	FLOW EQUALIZATION BUILDING TRAIN B OVERALL ONE-LINE DIAGRAM - DEMOLITION
246	S-E-100	PRIMARY TREATMENT COMPLEX TRAIN C OVERALL ONE-LINE DIAGRAM - DEMOLITION (SHEET 1 OF 2)
247	S-E-101	PRIMARY TREATMENT COMPLEX TRAIN C OVERALL ONE-LINE DIAGRAM - DEMOLITION (SHEET 2 OF 2)
248	S-E-102	SECONDARY SLUDGE PUMP BUILDING TRAIN C OVERALL ONE-LINE DIAGRAM - DEMOLITION
249	S-E-103	ADMINISTRATION BUILDING OVERALL ONE-LINE DIAGRAM - DEMOLITION
250	S-E-104	LIFT STATION NO. 1 OVERALL ONE-LINE DIAGRAM - DEMOLITION
251	S-E-105	LIFT STATION NO. 2 OVERALL ONE-LINE DIAGRAM - DEMOLITION
252	S-E-106	BLOWER BUILDING TRAIN C OVERALL ONE-LINE DIAGRAM - DEMOLITION (SHEET 1 OF 2)
253	S-E-107	BLOWER BUILDING TRAIN C OVERALL ONE-LINE DIAGRAM - DEMOLITION (SHEET 2 OF 2)
254	S-E-108	SECONDARY TREATMENT BUILDING OVERALL ONE-LINE DIAGRAM - DEMOLITION (SHEET 1 OF 2)
255	S-E-109	SECONDARY TREATMENT BUILDING OVERALL ONE-LINE DIAGRAM - DEMOLITION (SHEET 2 OF 2)
256	S-E-110	MAINTENANCE BUILDINGS NO. 1 AND NO. 2 OVERALL ONE-LINE DIAGRAM - DEMOLITION
257	S-E-111	SLUDGE TRANSFER BUILDING OVERALL ONE-LINE DIAGRAM - DEMOLITION
258	S-E-112	FILTER BUILDING POWER CENTER OVERALL ONE-LINE DIAGRAM - DEMOLITION
259	S-E-113	FILTER BUILDING OVERALL ONE-LINE DIAGRAM - DEMOLITION
260	S-E-114	UTILITY PUMP BUILDING OVERALL ONE-LINE DIAGRAM - DEMOLITION
261	S-E-115	ELECTRICAL BUILDING B OVERALL ONE-LINE DIAGRAM - DEMOLITION
262	S-E-116	JIMMY CLAY PUMP STATION OVERALL ONE-LINE DIAGRAM - DEMOLITION
263	S-E-117	DECHLORINATION BUILDING OVERALL ONE-LINE DIAGRAM - DEMOLITION
264	S-E-118	WATER REUSE STATION OVERALL ONE-LINE DIAGRAM - DEMOLITION
265	S-E-119	SITE DUCTBANK PLAN - DEMOLITION (SHEET 1 OF 14)
266	S-E-120	SITE DUCTBANK PLAN - DEMOLITION (SHEET 2 OF 14)
267	S-E-121	SITE DUCTBANK PLAN - DEMOLITION (SHEET 3 OF 14)
268	S-E-122	SITE DUCTBANK PLAN - DEMOLITION (SHEET 4 OF 14)
269	S-E-123	SITE DUCTBANK PLAN - DEMOLITION (SHEET 5 OF 14)
270	S-E-124	SITE DUCTBANK PLAN - DEMOLITION (SHEET 6 OF 14)
271	S-E-125	SITE DUCTBANK PLAN - DEMOLITION (SHEET 7 OF 14)
272	S-E-126	SITE DUCTBANK PLAN - DEMOLITION (SHEET 8 OF 14)
273	S-E-127	SITE DUCTBANK PLAN - DEMOLITION (SHEET 9 OF 14)
274	S-E-128	SITE DUCTBANK PLAN - DEMOLITION (SHEET 10 OF 14)
275	S-E-129	SITE DUCTBANK PLAN - DEMOLITION (SHEET 11 OF 14)
276	S-E-130	SITE DUCTBANK PLAN - DEMOLITION (SHEET 12 OF 14)
277	S-E-131	SITE DUCTBANK PLAN - DEMOLITION (SHEET 13 OF 14)
278	S-E-132	SITE DUCTBANK PLAN - DEMOLITION (SHEET 14 OF 14)
279	S-E-133	ENLARGED SITE DUCT BANK PLAN DEMOLITION
280	S-E-134	DUCTBANK SECTION ELEVATIONS - DEMOLITION (SHEET 1 OF 7)
281	S-E-135	DUCTBANK SECTION ELEVATIONS - DEMOLITION (SHEET 2 OF 7)
282	S-E-136	DUCTBANK SECTION ELEVATIONS - DEMOLITION (SHEET 3 OF 7)
283	S-E-137	DUCTBANK SECTION ELEVATIONS - DEMOLITION (SHEET 4 OF 7)
284	S-E-138	DUCTBANK SECTION ELEVATIONS - DEMOLITION (SHEET 5 OF 7)
285	S-E-139	DUCTBANK SECTION ELEVATIONS - DEMOLITION (SHEET 6 OF 7)
286	S-E-140	DUCTBANK SECTION ELEVATIONS - DEMOLITION (SHEET 7 OF 7)
287	S-E-141	ELECTRICAL MANHOLE MH-1 ELEVATION - DEMOLITION
288	S-E-142	ELECTRICAL MANHOLE MH-1A ELEVATION - DEMOLITION
289	S-E-143	ELECTRICAL MANHOLE MH-1B ELEVATION - DEMOLITION
290	S-E-144	ELECTRICAL MANHOLE MH-2 ELEVATION - DEMOLITION
291	S-E-145	ELECTRICAL MANHOLE MH-4 ELEVATION - DEMOLITION
292	S-E-146	ELECTRICAL MANHOLE MH-4A ELEVATION - DEMOLITION
293	S-E-147	ELECTRICAL MANHOLE MH-5 ELEVATION - DEMOLITION
294	S-E-148	ELECTRICAL MANHOLE MH-5A ELEVATION - DEMOLITION
295	S-E-149	ELECTRICAL MANHOLE MH-5B ELEVATION - DEMOLITION
296	S-E-150	ELECTRICAL MANHOLE MH-10 ELEVATION - DEMOLITION
297	S-E-151	ELECTRICAL MANHOLE MH-11 ELEVATION - DEMOLITION
298	S-E-152	ELECTRICAL MANHOLE MH-12 ELEVATION - DEMOLITION
299	S-E-153	ELECTRICAL MANHOLE MH-13 ELEVATION - DEMOLITION
300	S-E-154	ELECTRICAL MANHOLE MH-14 ELEVATION - DEMOLITION
301	S-E-155	ELECTRICAL MANHOLE MH-15 ELEVATION - DEMOLITION
302	S-E-156	ELECTRICAL MANHOLE MH-MP1 ELEVATION - DEMOLITION
303	S-E-157	ELECTRICAL MANHOLE MH-MP2 ELEVATION - DEMOLITION
304	S-E-158	ELECTRICAL MANHOLE MH-16A ELEVATION - DEMOLITION
305	S-E-159	ELECTRICAL MANHOLE MH-16B ELEVATION - DEMOLITION
306	S-E-160	MEDIUM VOLTAGE OVERALL LOAD FLOW AND SWITCHING ONE-LINE DIAGRAM - RENOVATION
307	S-E-161	MEDIUM VOLTAGE PARTIAL ENLARGED LOAD FLOW AND SWITCHING ONE-LINE DIAGRAM - RENOVATION (SHEET 1 OF 3)
308	S-E-162	MEDIUM VOLTAGE PARTIAL ENLARGED LOAD FLOW AND SWITCHING ONE-LINE DIAGRAM - RENOVATION (SHEET 2 OF 3)
309	S-E-163	MEDIUM VOLTAGE PARTIAL ENLARGED LOAD FLOW AND SWITCHING ONE-LINE DIAGRAM - RENOVATION (SHEET 3 OF 3)
310	S-E-164	SUBSTATION NO. 1 OVERALL ONE-LINE DIAGRAM - PROPOSED
311	S-E-165	SUBSTATION NO. 2 OVERALL ONE-LINE DIAGRAM - RENOVATION
312	S-E-166	PRELIMINARY TREATMENT STRUCTURE TRAIN A OVERALL ONE-LINE DIAGRAM - RENOVATION
313	S-E-167	SECONDARY SLUDGE PUMP BUILDING TRAIN A OVERALL ONE-LINE DIAGRAM - RENOVATION
314	S-E-168	FLOW EQUALIZATION BUILDING TRAIN A OVERALL ONE-LINE DIAGRAM - RENOVATION
315	S-E-169	PRELIMINARY TREATMENT STRUCTURE TRAIN B OVERALL ONE-LINE DIAGRAM - RENOVATION
316	S-E-170	SECONDARY SLUDGE PUMP BUILDING TRAIN B OVERALL ONE-LINE DIAGRAM - RENOVATION
317	S-E-171	FLOW EQUALIZATION BUILDING TRAIN B OVERALL ONE-LINE DIAGRAM - RENOVATION
318	S-E-172	PRIMARY TREATMENT COMPLEX TRAIN C OVERALL ONE-LINE DIAGRAM - RENOVATION (SHEET 1 OF 2)
319	S-E-173	PRIMARY TREATMENT COMPLEX TRAIN C OVERALL ONE-LINE DIAGRAM - RENOVATION (SHEET 2 OF 2)
320	S-E-174	SECONDARY SLUDGE PUMP BUILDING TRAIN C OVERALL ONE-LINE DIAGRAM - RENOVATION
321	S-E-175	ADMINISTRATION BUILDING OVERALL ONE-LINE DIAGRAM - RENOVATION
322	S-E-176	LIFT STATION NO. 1 OVERALL ONE-LINE DIAGRAM - RENOVATION
323	S-E-177	LIFT STATION NO. 2 OVERALL ONE-LINE DIAGRAM - RENOVATION
324	S-E-178	BLOWER BUILDING TRAIN C OVERALL ONE-LINE DIAGRAM - RENOVATION (SHEET 1 OF 2)
325	S-E-179	BLOWER BUILDING TRAIN C OVERALL ONE-LINE DIAGRAM - RENOVATION (SHEET 2 OF 2)
326	S-E-180	SECONDARY TREATMENT BUILDING OVERALL ONE-LINE DIAGRAM - RENOVATION (SHEET 1 OF 2)
327	S-E-181	SECONDARY TREATMENT BUILDING OVERALL ONE-LINE DIAGRAM - RENOVATION (SHEET 2 OF 2)
328	S-E-182	MAINTENANCE BUILDINGS NO. 1 AND NO. 2 OVERALL ONE-LINE DIAGRAM - RENOVATION
329	S-E-183	SLUDGE TRANSFER BUILDING OVERALL ONE-LINE DIAGRAM - RENOVATION
330	S-E-184	FILTER BUILDING POWER CENTER OVERALL ONE-LINE DIAGRAM - RENOVATION
331	S-E-185	FILTER BUILDING OVERALL ONE-LINE DIAGRAM - RENOVATION
332	S-E-186	UTILITY PUMP BUILDING OVERALL ONE-LINE DIAGRAM - RENOVATION
333	S-E-187	ELECTRICAL BUILDING B OVERALL ONE-LINE DIAGRAM - RENOVATION
334	S-E-188	JIMMY CLAY PUMP STATION OVERALL ONE-LINE DIAGRAM - RENOVATION
335	S-E-189	DECHLORINATION BUILDING OVERALL ONE-LINE DIAGRAM - RENOVATION
336	S-E-190	WATER REUSE STATION OVERALL ONE-LINE DIAGRAM - RENOVATION

BAR LENGTH ON ORIGINAL DRAWING EQUALS ONE INCH, ADJUST SCALE ACCORDINGLY.

REUSE OF DOCUMENTS

This document, and the designs incorporated herein, is an instrument of professional service that has been developed, designed and prepared by Harutunian Engineering, Inc., and is not to be used, in whole or in part, for any other project without giving written notice to Harutunian Engineering, Inc.

NO.	DATE:	DESCRIPTION

HARUTUNIAN ENGINEERING INCORPORATED

TEXAS FIRM REGISTRATION NUMBER F-2408

ENGINEERING AND ENVIRONMENTAL CONSULTANTS
8100 CROSS PARK DRIVE
AUSTIN, TEXAS 78754

STATE OF TEXAS
SHANT HARUTUNIAN
87735
REGISTERED
PROFESSIONAL ENGINEER
10/7/2019

DESIGNED BY:	HEI
CHECKED BY:	HEI
APPROVED BY:	HEI
SUBMITTAL DATE:	OCTOBER 2019
SCALE:	NTS

SOUTH AUSTIN REGIONAL WASTEWATER TREATMENT PLANT
ELECTRICAL SUBSTATION NO. 1 REPLACEMENT PROJECT
CIP I.D.# 3333.032

INDEX OF SHEETS
(SHEET 2 OF 6)

PROJECT NO: 2014-300 | SHT. 571 OF 866 | DWG NO. G-IOS-002

(CONTINUED)

SHEET NO.	DRAWING NO.	TITLE
337	S-E-191	OVERALL SITE PLAN – RENOVATION
338	S-E-192	SITE DUCT BANK PLAN – RENOVATION (SHEET 1 OF 14)
339	S-E-193	SITE DUCT BANK PLAN – RENOVATION (SHEET 2 OF 14)
340	S-E-194	SITE DUCT BANK PLAN –RENOVATION (SHEET 3 OF 14)
341	S-E-195	SITE DUCT BANK PLAN – RENOVATION (SHEET 4 OF 14)
342	S-E-196	SITE DUCT BANK PLAN – RENOVATION (SHEET 5 OF 14)
343	S-E-197	SITE DUCT BANK PLAN – RENOVATION (SHEET 6 OF 14)
344	S-E-198	SITE DUCT BANK PLAN – RENOVATION (SHEET 7 OF 14)
345	S-E-199	SITE DUCT BANK PLAN – RENOVATION (SHEET 8 OF 14)
346	S-E-200	SITE DUCT BANK PLAN – RENOVATION (SHEET 9 OF 14)
347	S-E-201	SITE DUCT BANK PLAN – RENOVATION (SHEET 10 OF 14)
348	S-E-202	SITE DUCT BANK PLAN – RENOVATION (SHEET 11 OF 14)
349	S-E-203	SITE DUCT BANK PLAN – RENOVATION (SHEET 12 OF 14)
350	S-E-204	SITE DUCT BANK PLAN – RENOVATION (SHEET 13 OF 14)
351	S-E-205	SITE DUCT BANK PLAN – RENOVATION (SHEET 14 OF 14)
352	S-E-206	SITE DUCT BANK PLAN – RENOVATION ENLARGED VIEW
353	S-E-207	ENLARGED SITE DUCT BANK PLAN RENOVATION
354	S-E-208	DUCT BANK SECTION ELEVATIONS – RENOVATION (SHEET 1 OF 7)
355	S-E-209	DUCT BANK SECTION ELEVATIONS – RENOVATION (SHEET 2 OF 7)
356	S-E-210	DUCT BANK SECTION ELEVATIONS – RENOVATION (SHEET 3 OF 7)
357	S-E-211	DUCT BANK SECTION ELEVATIONS – RENOVATION (SHEET 4 OF 7)
358	S-E-212	DUCT BANK SECTION ELEVATIONS – RENOVATION (SHEET 5 OF 7)
359	S-E-213	DUCT BANK SECTION ELEVATIONS – RENOVATION (SHEET 6 OF 7)
360	S-E-214	DUCT BANK SECTION ELEVATIONS – RENOVATION (SHEET 7 OF 7)
361	S-E-215	DUCT BANK SECTION ELEVATIONS – PROPOSED (SHEET 1 OF 6)
362	S-E-216	DUCT BANK SECTION ELEVATIONS – PROPOSED (SHEET 2 OF 6)
363	S-E-217	DUCT BANK SECTION ELEVATIONS – PROPOSED (SHEET 3 OF 6)
364	S-E-218	DUCT BANK SECTION ELEVATIONS – PROPOSED (SHEET 4 OF 6)
365	S-E-219	DUCT BANK SECTION ELEVATIONS – PROPOSED (SHEET 5 OF 6)
366	S-E-220	DUCT BANK SECTION ELEVATIONS – PROPOSED (SHEET 6 OF 6)
367	S-E-221	ELECTRICAL MANHOLE MH-1 ELEVATION – RENOVATION
368	S-E-222	ELECTRICAL MANHOLE MH-1A ELEVATION – RENOVATION
369	S-E-223	ELECTRICAL MANHOLE MH-1B ELEVATION – RENOVATION
370	S-E-224	ELECTRICAL MANHOLE MH-2 ELEVATION – RENOVATION
371	S-E-225	ELECTRICAL MANHOLE MH-4 ELEVATION – RENOVATION
372	S-E-226	ELECTRICAL MANHOLE MH-4A ELEVATION – RENOVATION
373	S-E-227	ELECTRICAL MANHOLE MH-5 ELEVATION – RENOVATION
374	S-E-228	ELECTRICAL MANHOLE MH-5A ELEVATION – RENOVATION
375	S-E-229	ELECTRICAL MANHOLE MH-5B ELEVATION – RENOVATION
376	S-E-230	ELECTRICAL MANHOLE MH-10 ELEVATION – RENOVATION
377	S-E-231	ELECTRICAL MANHOLE MH-11 ELEVATION – RENOVATION
378	S-E-232	ELECTRICAL MANHOLE MH-12 ELEVATION – RENOVATION
379	S-E-233	ELECTRICAL MANHOLE MH-13 ELEVATION – RENOVATION
380	S-E-234	ELECTRICAL MANHOLE MH-14 ELEVATION – RENOVATION
381	S-E-235	ELECTRICAL MANHOLE MH-15 ELEVATION – RENOVATION
382	S-E-236	ELECTRICAL MANHOLE MH-MP1 ELEVATION – RENOVATION
383	S-E-237	ELECTRICAL MANHOLE MH-MP2 ELEVATION – RENOVATION
384	S-E-238	ELECTRICAL MANHOLE MH-16A ELEVATION – RENOVATION
385	S-E-239	ELECTRICAL MANHOLE MH-16B ELEVATION – RENOVATION
386	S-E-240	ELECTRICAL MANHOLE EMHC-1A ELEVATION – RENOVATION
387	S-E-241	ELECTRICAL MANHOLE EMHC-1B ELEVATION – RENOVATION
388	S-E-242	ELECTRICAL MANHOLE EMHC-2A ELEVATION – RENOVATION
389	S-E-243	ELECTRICAL MANHOLE EMHC-2B ELEVATION – RENOVATION
390	S-E-244	ELECTRICAL MANHOLE EMHC-3A ELEVATION – RENOVATION
391	S-E-245	ELECTRICAL MANHOLE EMHC-3B ELEVATION – RENOVATION
392	S-E-246	ELECTRICAL MANHOLE EMHC-4A ELEVATION – RENOVATION
393	S-E-247	ELECTRICAL MANHOLE EMHC-4B ELEVATION – RENOVATION
394	S-E-248	ELECTRICAL MANHOLE EMH-40A ELEVATION – PROPOSED
395	S-E-249	ELECTRICAL MANHOLE EMH-40B ELEVATION – PROPOSED
396	S-E-250	ELECTRICAL MANHOLE EMH-41A ELEVATION – PROPOSED
397	S-E-251	ELECTRICAL MANHOLE EMH-41B ELEVATION – PROPOSED
398	S-E-252	ELECTRICAL MANHOLE EMH-42A ELEVATION – PROPOSED
399	S-E-253	ELECTRICAL MANHOLE EMH-42B ELEVATION – PROPOSED
400	S-E-254	ELECTRICAL MANHOLE EMH-43A ELEVATION – PROPOSED
401	S-E-255	ELECTRICAL MANHOLE EMH-43B ELEVATION – PROPOSED
402	S-E-256	ELECTRICAL MANHOLE EMH-44A ELEVATION – PROPOSED
403	S-E-257	ELECTRICAL MANHOLE EMH-44B ELEVATION – PROPOSED
404	S-E-258	ELECTRICAL MANHOLE EMH-45A ELEVATION – PROPOSED
405	S-E-259	ELECTRICAL MANHOLE EMH-45B ELEVATION – PROPOSED
406	S-E-260	ELECTRICAL MANHOLE EMH-46A ELEVATION – PROPOSED
407	S-E-261	ELECTRICAL MANHOLE EMH-46B ELEVATION – PROPOSED
408	S-E-262	ELECTRICAL MANHOLE EMH-50A ELEVATION – PROPOSED
409	S-E-263	ELECTRICAL MANHOLE EMH-50B ELEVATION – PROPOSED
410	S-E-264	ELECTRICAL MANHOLE EMH-51A ELEVATION – PROPOSED
411	S-E-265	ELECTRICAL MANHOLE EMH-51B ELEVATION – PROPOSED
412	S-E-266	ELECTRICAL MANHOLE EMH-52A ELEVATION – PROPOSED
413	S-E-267	ELECTRICAL MANHOLE EMH-52B ELEVATION – PROPOSED
414	S-E-268	ELECTRICAL MANHOLE EMH-53A ELEVATION – PROPOSED
415	S-E-269	ELECTRICAL MANHOLE EMH-53B ELEVATION – PROPOSED

Volume 3

SHEET NO.	DRAWING NO.	TITLE
416	G-COV-003	COVER SHEET VOLUME 3
417	G-G-001	GENERAL LEGEND
418	G-IOS-001	INDEX OF SHEETS (SHEET 1 OF 6)
419	G-IOS-002	INDEX OF SHEETS (SHEET 2 OF 6)
420	G-IOS-003	INDEX OF SHEETS (SHEET 3 OF 6)
421	G-IOS-004	INDEX OF SHEETS (SHEET 4 OF 6)
422	G-IOS-005	INDEX OF SHEETS (SHEET 5 OF 6)
423	G-IOS-006	INDEX OF SHEETS (SHEET 6 OF 6)
424	SEQ-E-001	CONSTRUCTION SEQUENCE NARRATIVE
425	SEQ-E-002	SWITCHING CONFIGURATION TABLE (SHEET 1 OF 2)
426	SEQ-E-003	SWITCHING CONFIGURATION TABLE (SHEET 2 OF 2)
427	SEQ-E-004	CONSTRUCTION SEQUENCE EXISTING
428	SEQ-E-005	CONSTRUCTION SEQUENCE STEP 11 AND 12 (SHEET 1 OF 2)
429	SEQ-E-006	CONSTRUCTION SEQUENCE STEP 11 AND 12 (SHEET 2 OF 2)
430	SEQ-E-007	CONSTRUCTION SEQUENCE STEP 19 (SHEET 1 OF 2)
431	SEQ-E-008	CONSTRUCTION SEQUENCE STEP 19 (SHEET 2 OF 2)
432	SEQ-E-009	CONSTRUCTION SEQUENCE STEP 21 (SHEET 1 OF 2)
433	SEQ-E-010	CONSTRUCTION SEQUENCE STEP 21 (SHEET 2 OF 2)
434	SEQ-E-011	CONSTRUCTION SEQUENCE STEP 22 (SHEET 1 OF 2)
435	SEQ-E-012	CONSTRUCTION SEQUENCE STEP 22 (SHEET 2 OF 2)
436	SEQ-E-013	CONSTRUCTION SEQUENCE STEPS 24 AND 25 (SHEET 1 OF 2)
437	SEQ-E-014	CONSTRUCTION SEQUENCE STEPS 24 AND 25 (SHEET 2 OF 2)
438	SEQ-E-015	CONSTRUCTION SEQUENCE STEP 31 (SHEET 1 OF 2)
439	SEQ-E-016	CONSTRUCTION SEQUENCE STEP 31 (SHEET 2 OF 2)
440	SEQ-E-017	CONSTRUCTION SEQUENCE STEP 33 (SHEET 1 OF 2)
441	SEQ-E-018	CONSTRUCTION SEQUENCE STEP 33 (SHEET 2 OF 2)
442	SEQ-E-019	CONSTRUCTION SEQUENCE STEP 34 (SHEET 1 OF 2)
443	SEQ-E-020	CONSTRUCTION SEQUENCE STEP 34 (SHEET 2 OF 2)
444	SEQ-E-021	CONSTRUCTION SEQUENCE STEPS 36 AND 37 (SHEET 1 OF 2)
445	SEQ-E-022	CONSTRUCTION SEQUENCE STEPS 36 AND 37 (SHEET 2 OF 2)
446	SEQ-E-023	CONSTRUCTION SEQUENCE STEP 39 (SHEET 1 OF 2)
447	SEQ-E-024	CONSTRUCTION SEQUENCE STEP 39 (SHEET 2 OF 2)
448	SEQ-E-025	CONSTRUCTION SEQUENCE STEP 40 (SHEET 1 OF 2)
449	SEQ-E-026	CONSTRUCTION SEQUENCE STEP 40 (SHEET 2 OF 2)
450	SEQ-E-027	CONSTRUCTION SEQUENCE STEP 43 (SHEET 1 OF 2)
451	SEQ-E-028	CONSTRUCTION SEQUENCE STEP 43 (SHEET 2 OF 2)
452	SEQ-E-029	CONSTRUCTION SEQUENCE STEP 44 (SHEET 1 OF 2)
453	SEQ-E-030	CONSTRUCTION SEQUENCE STEP 44 (SHEET 2 OF 2)
454	SEQ-E-031	CONSTRUCTION SEQUENCE STEP 46 THROUGH 48 (SHEET 1 OF 2)
455	SEQ-E-032	CONSTRUCTION SEQUENCE STEP 46 THROUGH 48 (SHEET 2 OF 2)
456	SEQ-E-033	CONSTRUCTION SEQUENCE STEPS 49 AND 50 (SHEET 1 OF 2)
457	SEQ-E-034	CONSTRUCTION SEQUENCE STEPS 49 AND 50 (SHEET 2 OF 2)
458	SEQ-E-035	CONSTRUCTION SEQUENCE STEPS 52 AND 53 (SHEET 1 OF 2)
459	SEQ-E-036	CONSTRUCTION SEQUENCE STEPS 52 AND 53 (SHEET 2 OF 2)
460	SEQ-E-037	CONSTRUCTION SEQUENCE STEPS 56 AND 58 (SHEET 1 OF 2)
461	SEQ-E-038	CONSTRUCTION SEQUENCE STEPS 56 AND 58 (SHEET 2 OF 2)
462	SEQ-E-039	CONSTRUCTION SEQUENCE STEPS 61 THROUGH 64 (SHEET 1 OF 2)
463	SEQ-E-040	CONSTRUCTION SEQUENCE STEPS 61 THROUGH 64 (SHEET 2 OF 2)
464	AD-E-001	ADMINISTRATION BUILDING DETAILED ONE-LINE DIAGRAM
465	AD-E-002	ADMINISTRATION BUILDING EQUIPMENT LOCATION PLAN – EXISTING
466	BBC1-E-001	BLOWER BUILDING TRAIN C DETAILED ONE-LINE DIAGRAM (SHEET 1 OF 4)
467	BBC1-E-002	BLOWER BUILDING TRAIN C DETAILED ONE-LINE DIAGRAM (SHEET 2 OF 4)
468	BBC1-E-003	BLOWER BUILDING TRAIN C DETAILED ONE-LINE DIAGRAM (SHEET 3 OF 4)
469	BBC1-E-004	BLOWER BUILDING TRAIN C DETAILED ONE-LINE DIAGRAM (SHEET 4 OF 4)
470	BBC1-E-005	BLOWER BUILDING TRAIN C OVERALL PLAN – EXISTING
471	BBC1-E-006	BLOWER BUILDING TRAIN C EQUIPMENT LOCATION PLAN – EXISTING
472	DCL-E-001	DECHLORINATION BUILDING DETAILED ONE-LINE DIAGRAM (SHEET 1 OF 2)
473	DCL-E-002	DECHLORINATION BUILDING DETAILED ONE-LINE DIAGRAM (SHEET 2 OF 2)
474	DCL-E-003	DECHLORINATION BUILDING EQUIPMENT LOCATION PLAN – EXISTING
475	EBB-E-001	ELECTRICAL BUILDING B DETAILED ONE-LINE DIAGRAM
476	EBB-E-002	ELECTRICAL BUILDING B EQUIPMENT LOCATION PLAN – EXISTING
477	ESUB1-E-001	EXISTING SUBSTATION NO. 1 DETAILED ONE-LINE DIAGRAM (SHEET 1 OF 2)
478	ESUB1-E-002	EXISTING SUBSTATION NO. 1 DETAILED ONE-LINE DIAGRAM (SHEET 2 OF 2)

BAR LENGTH ON ORIGINAL DRAWING EQUALS ONE INCH, ADJUST SCALE ACCORDINGLY.

REUSE OF DOCUMENTS

This document, and the designs incorporated herein, is an instrument of professional service that has been developed, designed and prepared by Harutunian Engineering, Inc., and is not to be used, in whole or in part, for any other project without giving written notice to Harutunian Engineering, Inc.

NO.	DATE:	DESCRIPTION

HARUTUNIAN ENGINEERING INCORPORATED
TEXAS FIRM REGISTRATION NUMBER F-2408
ENGINEERING AND ENVIRONMENTAL CONSULTANTS
8100 CROSS PARK DRIVE
AUSTIN, TEXAS 78754

STATE OF TEXAS
SHANT HARUTUNIAN
87735
REGISTERED
PROFESSIONAL ENGINEER
10/7/2019

DESIGNED BY:	HEI
CHECKED BY:	HEI
APPROVED BY:	HEI
SUBMITTAL DATE:	OCTOBER 2019
SCALE:	NTS

SOUTH AUSTIN REGIONAL WASTEWATER TREATMENT PLANT
ELECTRICAL SUBSTATION NO. 1 REPLACEMENT PROJECT
CIP I.D.# 3333.032

INDEX OF SHEETS
(SHEET 3 OF 6)

PROJECT NO: 2014-300 | SHT. 572 OF 866 | DWG NO. G-IOS-003

(CONTINUED)

SHEET NO.	DRAWING NO.	TITLE
479	ESUB1-E-003	EXISTING SUBSTATION NO. 1 EQUIPMENT LOCATION PLAN – EXISTING
480	ESUB1-E-004	EXISTING SUBSTATION NO. 1 EQUIPMENT ELEVATIONS – EXISTING
481	ESUB1-E-005	EXISTING SUBSTATION NO. 1 DETAILED ONE-LINE DIAGRAM – DEMOLITION (SHEET 1 OF 2)
482	ESUB1-E-006	EXISTING SUBSTATION NO. 1 DETAILED ONE-LINE DIAGRAM – DEMOLITION (SHEET 2 OF 2)
483	FB1-E-001	FILTER BUILDING POWER CENTER DETAILED ONE-LINE DIAGRAM (SHEET 1 OF 2)
484	FB1-E-002	FILTER BUILDING POWER CENTER DETAILED ONE-LINE DIAGRAM (SHEET 2 OF 2)
485	FB1-E-003	FILTER BUILDING DETAILED ONE-LINE DIAGRAM (SHEET 1 OF 3)
486	FB1-E-004	FILTER BUILDING DETAILED ONE-LINE DIAGRAM (SHEET 2 OF 3)
487	FB1-E-005	FILTER BUILDING DETAILED ONE-LINE DIAGRAM (SHEET 3 OF 3)
488	FB1-E-006	FILTER FACILITIES EQUIPMENT LOCATION PLAN – EXISTING (SHEET 1 OF 3)
489	FB1-E-007	FILTER FACILITIES EQUIPMENT LOCATION PLAN – EXISTING (SHEET 2 OF 3)
490	FB1-E-008	FILTER FACILITIES EQUIPMENT LOCATION PLAN – EXISTING (SHEET 3 OF 3)
491	FB1-E-009	FILTER BUILDING POWER CENTER DETAILED ONE-LINE DIAGRAM – DEMOLITION (SHEET 1 OF 2)
492	FB1-E-010	FILTER BUILDING POWER CENTER DETAILED ONE-LINE DIAGRAM – DEMOLITION (SHEET 2 OF 2)
493	FB1-E-011	FILTER BUILDING POWER CENTER DETAILED ONE-LINE DIAGRAM – RENOVATION (SHEET 1 OF 2)
494	FB1-E-012	FILTER BUILDING POWER CENTER DETAILED ONE-LINE DIAGRAM – RENOVATION (SHEET 2 OF 2)
495	FEBA-E-001	FLOW EQUALIZATION BASIN TRAIN A DETAILED ONE-LINE DIAGRAM
496	FEBA-E-002	FLOW EQUALIZATION BASIN BUILDING TRAIN A EQUIPMENT LOCATION PLAN – EXISTING
497	FEBB-E-001	FLOW EQUALIZATION BASIN TRAIN B DETAILED ONE-LINE DIAGRAM – EXISTING
498	FEBB-E-002	FLOW EQUALIZATION BASIN BUILDING TRAIN B EQUIPMENT LOCATION PLAN – EXISTING
499	FEBB-E-003	FLOW EQUALIZATION BASIN TRAIN B DETAILED ONE-LINE DIAGRAM – DEMOLITION
500	FEBB-E-004	FLOW EQUALIZATION BASIN TRAIN B DETAILED ONE-LINE DIAGRAM – RENOVATION
501	JCLY-E-001	JIMMY CLAY PUMP STATION DETAILED ONE-LINE DIAGRAM
502	LS1-E-001	LIFT STATION NO. 1 DETAILED ONE-LINE DIAGRAM (SHEET 1 OF 3)
503	LS1-E-002	LIFT STATION NO. 1 DETAILED ONE-LINE DIAGRAM (SHEET 2 OF 3)
504	LS1-E-003	LIFT STATION NO. 1 DETAILED ONE-LINE DIAGRAM (SHEET 3 OF 3)
505	LS1-E-004	LIFT STATION NO. 1 EQUIPMENT LOCATION PLAN – EXISTING
506	LS1-E-005	LIFT STATION NO. 1 DETAILED ONE-LINE DIAGRAM DEMOLITION (SHEET 1 OF 3)
507	LS1-E-006	LIFT STATION NO. 1 DETAILED ONE-LINE DIAGRAM DEMOLITION (SHEET 2 OF 3)
508	LS1-E-007	LIFT STATION NO. 1 DETAILED ONE-LINE DIAGRAM DEMOLITION (SHEET 3 OF 3)
509	LS1-E-008	LIFT STATION NO. 1 DETAILED ONE-LINE DIAGRAM RENOVATION (SHEET 1 OF 3)
510	LS1-E-009	LIFT STATION NO. 1 DETAILED ONE-LINE DIAGRAM RENOVATION (SHEET 2 OF 3)
511	LS1-E-010	LIFT STATION NO. 1 DETAILED ONE-LINE DIAGRAM RENOVATION (SHEET 3 OF 3)
512	LS1-E-011	LIFTS STATION NO. 1 PLAN – RENOVATION
513	LS2-E-001	LIFT STATION NO. 2 DETAILED ONE-LINE DIAGRAM (SHEET 1 OF 3)
514	LS2-E-002	LIFT STATION NO. 2 DETAILED ONE-LINE DIAGRAM (SHEET 2 OF 3)
515	LS2-E-003	LIFT STATION NO. 2 DETAILED ONE-LINE DIAGRAM (SHEET 3 OF 3)
516	LS2-E-004	LIFT STATION NO. 2 EQUIPMENT LOCATION PLAN – EXISTING
517	MB1-E-001	MAINTENANCE BUILDING NO. 1 DETAILED ONE-LINE DIAGRAM
518	MB1-E-002	MAINTENANCE SHOP NO. 1 GROUND LEVEL EQUIPMENT LOCATION PLAN – EXISTING
519	MB2-E-001	MAINTENANCE BUILDING NO. 2 DETAILED ONE-LINE DIAGRAM
520	MB2-E-002	MAINTENANCE BUILDING NO. 2 EQUIPMENT LOCATION PLAN – EXISTING
521	PT1-E-001	PRELIMINARY TREATMENT STRUCTURE TRAIN A DETAILED ONE-LINE DIAGRAM
522	PT1-E-002	PRELIMINARY TREATMENT STRUCTURE TRAIN A EQUIPMENT LOCATION PLAN – EXISTING
523	PT1-E-003	PRELIMINARY TREATMENT STRUCTURE TRAIN A DETAILED ONE-LINE DIAGRAM – DEMOLITION
524	PT1-E-004	PRELIMINARY TREATMENT STRUCTURE TRAIN A DETAILED ONE-LINE DIAGRAM – RENOVATION
525	PT2-E-001	PRELIMINARY TREATMENT STRUCTURE TRAIN B DETAILED ONE-LINE DIAGRAM
526	PT2-E-002	PRELIMINARY TREATMENT STRUCTURE TRAIN B EQUIPMENT LOCATION PLAN – EXISTING
527	PT2-E-003	PRELIMINARY TREATMENT STRUCTURE TRAIN B DETAILED ONE-LINE DIAGRAM – DEMOLITION
528	PT2-E-004	PRELIMINARY TREATMENT STRUCTURE TRAIN B DETAILED ONE-LINE DIAGRAM – RENOVATION
529	PTC1-E-001	PRIMARY TREATMENT COMPLEX TRAIN C DETAILED ONE-LINE DIAGRAM (SHEET 1 OF 5)
530	PTC1-E-002	PRIMARY TREATMENT COMPLEX TRAIN C DETAILED ONE-LINE DIAGRAM (SHEET 2 OF 5)
531	PTC1-E-003	PRIMARY TREATMENT COMPLEX TRAIN C DETAILED ONE-LINE DIAGRAM (SHEET 3 OF 5)
532	PTC1-E-004	PRIMARY TREATMENT COMPLEX TRAIN C DETAILED ONE-LINE DIAGRAM (SHEET 4 OF 5)
533	PTC1-E-005	PRIMARY TREATMENT COMPLEX TRAIN C DETAILED ONE-LINE DIAGRAM (SHEET 5 OF 5)
534	PTC1-E-006	PRIMARY TREATMENT COMPLEX TRAIN C ENLARGED PLAN – EXISTING
535	PTC1-E-007	PRIMARY TREATMENT COMPLEX TRAIN C EQUIPMENT LOCATION PLAN – EXISTING
536	SSC1-E-001	SECONDARY SLUDGE PUMP BUILDING TRAIN C DETAILED ONE-LINE DIAGRAM (SHEET 1 OF 3)
537	SSC1-E-002	SECONDARY SLUDGE PUMP BUILDING TRAIN C DETAILED ONE-LINE DIAGRAM (SHEET 2 OF 3)
538	SSC1-E-003	SECONDARY SLUDGE PUMP BUILDING TRAIN C DETAILED ONE-LINE DIAGRAM (SHEET 3 OF 3)
539	SSC1-E-004	SECONDARY SLUDGE PUMP BUILDING TRAIN C EQUIPMENT LOCATION PLAN – EXISTING
540	SSL1-E-001	SECONDARY SLUDGE PUMP BUILDING TRAIN A DETAILED ONE-LINE DIAGRAM
541	SSL1-E-002	SECONDARY SLUDGE PUMP BUILDING TRAIN A EQUIPMENT LOCATION PLAN – EXISTING
542	SSL2-E-001	SECONDARY SLUDGE PUMP BUILDING TRAIN B DETAILED ONE-LINE DIAGRAM – EXISTING
543	SSL2-E-002	SECONDARY SLUDGE PUMP BUILDING TRAIN B EQUIPMENT LOCATION PLAN – EXISTING
544	SSL2-E-003	SECONDARY SLUDGE PUMP BUILDING TRAIN B DETAILED ONE-LINE DIAGRAM – DEMOLITION
545	SSL2-E-004	SECONDARY SLUDGE PUMP BUILDING TRAIN B DETAILED ONE-LINE DIAGRAM – RENOVATION
546	STB-E-001	SECONDARY TREATMENT BUILDING DETAILED ONE-LINE DIAGRAM (SHEET 1 OF 6)
547	STB-E-002	SECONDARY TREATMENT BUILDING DETAILED ONE-LINE DIAGRAM (SHEET 2 OF 6)
548	STB-E-003	SECONDARY TREATMENT BUILDING DETAILED ONE-LINE DIAGRAM (SHEET 3 OF 6)
549	STB-E-004	SECONDARY TREATMENT BUILDING DETAILED ONE-LINE DIAGRAM (SHEET 4 OF 6)
550	STB-E-005	SECONDARY TREATMENT BUILDING DETAILED ONE-LINE DIAGRAM (SHEET 5 OF 6)
551	STB-E-006	SECONDARY TREATMENT BUILDING DETAILED ONE-LINE DIAGRAM (SHEET 6 OF 6)
552	STB-E-007	SECONDARY TREATMENT BUILDING EQUIPMENT LOCATION PLAN – EXISTING
553	STB-E-008	SECONDARY TREATMENT BUILDING DETAILED ONE-LINE DIAGRAM – DEMOLITION (SHEET 1 OF 6)
554	STB-E-009	SECONDARY TREATMENT BUILDING DETAILED ONE-LINE DIAGRAM – DEMOLITION (SHEET 2 OF 6)
555	STB-E-010	SECONDARY TREATMENT BUILDING DETAILED ONE-LINE DIAGRAM – DEMOLITION (SHEET 3 OF 6)
556	STB-E-011	SECONDARY TREATMENT BUILDING DETAILED ONE-LINE DIAGRAM – DEMOLITION (SHEET 4 OF 6)
557	STB-E-012	SECONDARY TREATMENT BUILDING DETAILED ONE-LINE DIAGRAM – DEMOLITION (SHEET 5 OF 6)
558	STB-E-013	SECONDARY TREATMENT BUILDING DETAILED ONE-LINE DIAGRAM – DEMOLITION (SHEET 6 OF 6)
559	STB-E-014	SECONDARY TREATMENT BUILDING DETAILED ONE-LINE DIAGRAM – RENOVATION (SHEET 1 OF 6)
560	STB-E-015	SECONDARY TREATMENT BUILDING DETAILED ONE-LINE DIAGRAM – RENOVATION (SHEET 2 OF 6)
561	STB-E-016	SECONDARY TREATMENT BUILDING DETAILED ONE-LINE DIAGRAM – RENOVATION (SHEET 3 OF 6)
562	STB-E-017	SECONDARY TREATMENT BUILDING DETAILED ONE-LINE DIAGRAM – RENOVATION (SHEET 4 OF 6)
563	STB-E-018	SECONDARY TREATMENT BUILDING DETAILED ONE-LINE DIAGRAM – RENOVATION (SHEET 5 OF 6)
564	STB-E-019	SECONDARY TREATMENT BUILDING DETAILED ONE-LINE DIAGRAM – RENOVATION (SHEET 6 OF 6)
565	STPB-E-001	SLUDGE TRANSFER PUMP BUILDING DETAILED ONE-LINE DIAGRAM (SHEET 1 OF 2)
566	STPB-E-002	SLUDGE TRANSFER PUMP BUILDING DETAILED ONE-LINE DIAGRAM (SHEET 2 OF 2)
567	STPB-E-003	SLUDGE TRANSFER PUMP BUILDING EQUIPMENT LOCATION PLAN – EXISTING

Volume 4

SHEET NO.	DRAWING NO.	TITLE
568	G-COV-004	COVER SHEET VOLUME 4
569	G-G-001	GENERAL LEGEND
570	G-IOS-001	INDEX OF SHEETS (SHEET 1 OF 6)
571	G-IOS-002	INDEX OF SHEETS (SHEET 2 OF 6)
572	G-IOS-003	INDEX OF SHEETS (SHEET 3 OF 6)
573	G-IOS-004	INDEX OF SHEETS (SHEET 4 OF 6)
574	G-IOS-005	INDEX OF SHEETS (SHEET 5 OF 6)
575	G-IOS-006	INDEX OF SHEETS (SHEET 6 OF 6)
576	SUB1-C-001	PROPOSED SUBSTATION CROSS SECTIONS
577	SUB1-A-001	CODE SUMMARY AND GENERAL NOTES
578	SUB1-A-002	DETAILS
579	SUB1-A-010	ARCHITECTURAL FLOOR PLAN
580	SUB1-A-020	ARCHITECTURAL ELEVATIONS
581	SUB1-A-025	ARCHITECTURAL ELEVATIONS
582	SUB1-A-030	ARCHITECTURAL BUILDING SECTIONS
583	SUB1-A-040	ARCHITECTURAL WALL SECTIONS
584	SUB1-S-001	STRUCTURAL FOUNDATION PLAN
585	SUB1-S-002	STRUCTURAL ROOF PLAN
586	SUB1-S-003	STRUCTURAL PARTIAL FOUNDATION PLAN & DETAILS
587	SUB1-S-004	STRUCTURAL BUILDING SECTION & ROOF DETAILS
588	SUB1-S-005	STRUCTURAL FOUNDATION SECTIONS
589	SUB1-S-006	STRUCTURAL NORTH & SOUTH BUILDING ELEVATIONS & ROOF DETAILS
590	SUB1-H-001	SUBSTATION NO. 1 HVAC EQUIPMENT SCHEDULES
591	SUB1-H-002	SUBSTATION NO. 1 HVAC LEGEND AND GENERAL NOTES
592	SUB1-H-003	SUBSTATION NO. 1 HVAC FLOOR PLAN – PROPOSED
593	SUB1-H-004	SUBSTATION NO. 1 HVAC EQUIPMENT PLAN – PROPOSED
594	SUB1-H-005	SUBSTATION NO. 1 HVAC EQUIPMENT PLAN – PROPOSED
595	SUB1-H-006	SUBSTATION NO. 1 SUB1-ACU-001 FRONT ELEVATION – PROPOSED
596	SUB1-H-007	SUBSTATION NO. 1 SUB1-ACU-002 FRONT ELEVATION – PROPOSED
597	SUB1-H-008	SUBSTATION NO. 1 SUB1-F-001 FRONT ELEVATION – PROPOSED
598	SUB1-H-009	SUBSTATION NO. 1 SUB1-F-002 FRONT ELEVATION – PROPOSED
599	SUB1-H-010	SUBSTATION NO. 1 ACU SYSTEMS SIDE ELEVATIONS – PROPOSED
600	SUB1-H-011	SUBSTATION NO. 1 SCRUBBER SYSTEMS SIDE ELEVATIONS – PROPOSED
601	SUB1-H-012	SUBSTATION NO. 1 ACU SUPPLY DUCTWORK PROFILES – PROPOSED
602	SUB1-E-001	SUBSTATION NO. 1 SUB1-SWGR-01A & SUB1-SWGR-01B OVERALL ONE-LINE DIAGRAM – PROPOSED
603	SUB1-E-002	SUBSTATION NO. 1 OVERALL ONE-LINE DIAGRAM – PROPOSED (SHEET 1 OF 4)
604	SUB1-E-003	SUBSTATION NO. 1 OVERALL ONE-LINE DIAGRAM – PROPOSED (SHEET 2 OF 4)
605	SUB1-E-004	SUBSTATION NO. 1 OVERALL ONE-LINE DIAGRAM – PROPOSED (SHEET 3 OF 4)
606	SUB1-E-005	SUBSTATION NO. 1 OVERALL ONE-LINE DIAGRAM – PROPOSED (SHEET 4 OF 4)
607	SUB1-E-006	SUBSTATION NO. 1 "SUB1-SWGR-100" DETAILED ONE-LINE DIAGRAM – PROPOSED (SHEET 1 OF 8)
608	SUB1-E-007	SUBSTATION NO. 1 "SUB1-SWGR-100" DETAILED ONE-LINE DIAGRAM – PROPOSED (SHEET 2 OF 8)
609	SUB1-E-008	SUBSTATION NO. 1 "SUB1-SWGR-100" DETAILED ONE-LINE DIAGRAM – PROPOSED (SHEET 3 OF 8)
610	SUB1-E-009	SUBSTATION NO. 1 "SUB1-SWGR-100" DETAILED ONE-LINE DIAGRAM – PROPOSED (SHEET 4 OF 8)
611	SUB1-E-010	SUBSTATION NO. 1 "SUB1-SWGR-100" DETAILED ONE-LINE DIAGRAM – PROPOSED (SHEET 5 OF 8)
612	SUB1-E-011	SUBSTATION NO. 1 "SUB1-SWGR-100" DETAILED ONE-LINE DIAGRAM – PROPOSED (SHEET 6 OF 8)
613	SUB1-E-012	SUBSTATION NO. 1 "SUB1-SWGR-100" DETAILED ONE-LINE DIAGRAM – PROPOSED (SHEET 7 OF 8)
614	SUB1-E-013	SUBSTATION NO. 1 "SUB1-SWGR-100" DETAILED ONE-LINE DIAGRAM – PROPOSED (SHEET 8 OF 8)
615	SUB1-E-014	SUBSTATION NO. 1 "SUB1-SWGR-200" DETAILED ONE-LINE DIAGRAM – PROPOSED (SHEET 1 OF 8)
616	SUB1-E-015	SUBSTATION NO. 1 "SUB1-SWGR-200" DETAILED ONE-LINE DIAGRAM – PROPOSED (SHEET 2 OF 8)
617	SUB1-E-016	SUBSTATION NO. 1 "SUB1-SWGR-200" DETAILED ONE-LINE DIAGRAM – PROPOSED (SHEET 3 OF 8)
618	SUB1-E-017	SUBSTATION NO. 1 "SUB1-SWGR-200" DETAILED ONE-LINE DIAGRAM – PROPOSED (SHEET 4 OF 8)
619	SUB1-E-018	SUBSTATION NO. 1 "SUB1-SWGR-200" DETAILED ONE-LINE DIAGRAM – PROPOSED (SHEET 5 OF 8)

BAR LENGTH ON ORIGINAL DRAWING EQUALS ONE INCH, ADJUST SCALE ACCORDINGLY.

REUSE OF DOCUMENTS

This document, and the designs incorporated herein, is an instrument of professional service that has been developed, designed and prepared by Harutunian Engineering, Inc., and is not to be used, in whole or in part, for any other project without giving written notice to Harutunian Engineering, Inc.

NO.	DATE:	DESCRIPTION

HARUTUNIAN ENGINEERING INCORPORATED

TEXAS FIRM REGISTRATION NUMBER F-2408

ENGINEERING AND ENVIRONMENTAL CONSULTANTS
8100 CROSS PARK DRIVE
AUSTIN, TEXAS 78754

STATE OF TEXAS
SHANT HARUTUNIAN
87735
REGISTERED
PROFESSIONAL ENGINEER
10/7/2019

DESIGNED BY:	HEI
CHECKED BY:	HEI
APPROVED BY:	HEI
SUBMITTAL DATE:	OCTOBER 2019
SCALE:	NTS

SOUTH AUSTIN REGIONAL WASTEWATER TREATMENT PLANT
ELECTRICAL SUBSTATION NO. 1 REPLACEMENT PROJECT
CIP I.D.# 3333.032

INDEX OF SHEETS
(SHEET 4 OF 6)

PROJECT NO: 2014-300 | SHT. 573 OF 866 | DWG NO. G-IOS-004

(CONTINUED)

SHEET NO.	DRAWING NO.	TITLE
620	SUB1-E-019	SUBSTATION NO. 1 "SUB1-SWGR-200" DETAILED ONE-LINE DIAGRAM - PROPOSED (SHEET 6 OF 8)
621	SUB1-E-020	SUBSTATION NO. 1 "SUB1-SWGR-200" DETAILED ONE-LINE DIAGRAM - PROPOSED (SHEET 7 OF 8)
622	SUB1-E-021	SUBSTATION NO. 1 "SUB1-SWGR-200" DETAILED ONE-LINE DIAGRAM - PROPOSED (SHEET 8 OF 8)
623	SUB1-E-022	SUBSTATION NO. 1 AC AUXILIARY ONE-LINE DIAGRAM - PROPOSED
624	SUB1-E-023	SUBSTATION NO. 1 DC AUXILIARY ONE-LINE DIAGRAM - PROPOSED
625	SUB1-E-024	SUBSTATION NO. 1 SUB1-SWGR-100 & SUB1-SWGR-200 FRONT ELEVATIONS - PROPOSED
626	SUB1-E-025	SUBSTATION NO. 1 LOW VOLTAGE EQUIPMENT FRONT ELEVATIONS - PROPOSED
627	SUB1-E-026	SUBSTATION NO. 1 "SUB1-SWGR-100" TYPICAL FEEDER BREAKER THREE LINE DIAGRAM - PROPOSED (SHEET 1 OF 5)
628	SUB1-E-027	SUBSTATION NO. 1 "SUB1-SWGR-100" TIE BREAKER THREE LINE DIAGRAM - PROPOSED (SHEET 2 OF 5)
629	SUB1-E-028	SUBSTATION NO. 1 "SUB1-SWGR-100" MAIN BREAKER THREE LINE DIAGRAM - PROPOSED (SHEET 3 OF 5)
630	SUB1-E-029	SUBSTATION NO. 1 "SUB1-SWGR-100" CONTROL POWER BREAKER THREE LINE DIAGRAM - PROPOSED (SHEET 4 OF 5)
631	SUB1-E-030	SUBSTATION NO. 1 "SUB1-SWGR-100" INCOMING THREE LINE DIAGRAM - PROPOSED (SHEET 5 OF 5)
632	SUB1-E-031	SUBSTATION NO. 1 "SUB1-SWGR-200" INCOMING THREE LINE DIAGRAM - PROPOSED (SHEET 1 OF 5)
633	SUB1-E-032	SUBSTATION NO. 1 "SUB1-SWGR-200" CONTROL POWER BREAKER THREE LINE DIAGRAM - PROPOSED (SHEET 2 OF 5)
634	SUB1-E-033	SUBSTATION NO. 1 "SUB1-SWGR-200" MAIN BREAKER THREE LINE DIAGRAM - PROPOSED (SHEET 3 OF 5)
635	SUB1-E-034	SUBSTATION NO. 1 "SUB1-SWGR-200" TIE BREAKER THREE LINE DIAGRAM - PROPOSED (SHEET 4 OF 5)
636	SUB1-E-035	SUBSTATION NO. 1 "SUB1-SWGR-200" TYPICAL FEEDER BREAKER THREE LINE DIAGRAM - PROPOSED (SHEET 5 OF 5)
637	SUB1-E-036	SUBSTATION NO. 1 EQUIPMENT LOCATION PLAN - PROPOSED
638	SUB1-E-037	SUBSTATION NO. 1 15kV CONDUIT ROUTING PLAN - PROPOSED
639	SUB1-E-038	SUBSTATION NO. 1 UNDERGROUND DUCTBANK PLAN - PROPOSED
640	SUB1-E-039	SUBSTATION NO. 1 I&C PLAN - PROPOSED
641	SUB1-E-040	SUBSTATION NO. 1 AUXILIARY AND RECEPTACLE PLAN - PROPOSED
642	SUB1-E-041	SUBSTATION NO. 1 LIGHTING PLAN - PROPOSED
643	SUB1-E-042	SUBSTATION NO. 1 POWER AND AUXILIARY PLAN - PROPOSED
644	SUB1-E-043	SUBSTATION NO. 1 ENLARGED I&C PLAN - PROPOSED (SHEET 1 OF 2)
645	SUB1-E-044	SUBSTATION NO. 1 ENLARGED I&C PLAN - PROPOSED (SHEET 2 of 2)
646	SUB1-E-045	SUBSTATION NO. 1 GROUNDING PLAN - PROPOSED
647	SUB1-E-046	SUBSTATION NO. 1 SECURITY PLAN - PROPOSED
648	SUB1-E-047	SUBSTATION NO. 1 SUB1-SWGR-100 MAIN BREAKER CONTROL LOGIC - PROPOSED (SHEET 1 OF 2)
649	SUB1-E-048	SUBSTATION NO. 1 SUB1-SWGR-100 MAIN BREAKER CONTROL LOGIC - PROPOSED (SHEET 2 OF 2)
650	SUB1-E-049	SUBSTATION NO. 1 SUB1-SWGR-100 TIE BREAKER CONTROL LOGIC - PROPOSED (SHEET 1 OF 2)
651	SUB1-E-050	SUBSTATION NO. 1 SUB1-SWGR-100 TIE BREAKER CONTROL LOGIC - PROPOSED (SHEET 2 OF 2)
652	SUB1-E-051	SUBSTATION NO. 1 SUB1-SWGR-100 TYPICAL FEEDER BREAKER CONTROL LOGIC - PROPOSED
653	SUB1-E-052	SUBSTATION NO. 1 SUB1-SWGR-200 MAIN BREAKER CONTROL LOGIC - PROPOSED (SHEET 1 OF 2)
654	SUB1-E-053	SUBSTATION NO. 1 SUB1-SWGR-200 MAIN BREAKER CONTROL LOGIC - PROPOSED (SHEET 2 OF 2)
655	SUB1-E-054	SUBSTATION NO. 1 SUB1-SWGR-200 TIE BREAKER CONTROL LOGIC - PROPOSED (SHEET 1 OF 2)
656	SUB1-E-055	SUBSTATION NO. 1 SUB1-SWGR-200 TIE BREAKER CONTROL LOGIC - PROPOSED (SHEET 2 OF 2)
657	SUB1-E-056	SUBSTATION NO. 1 SUB1-SWGR-200 TYPICAL FEEDER BREAKER CONTROL LOGIC - PROPOSED
658	SUB1-E-057	SUBSTATION NO. 1 AUXILIARY CONTROL LOGIC - PROPOSED (SHEET 1 OF 2)
659	SUB1-E-058	SUBSTATION NO. 1 AUXILIARY CONTROL LOGIC - PROPOSED (SHEET 2 OF 2)
660	SUB1-E-059	SUBSTATION NO. 1 DC BREAKER CONTROL POWER WIRING SCHEMATICS - PROPOSED
661	SUB1-E-060	SUBSTATION NO. 1 SUBSTATION MANAGEMENT CONTROL PANEL "SUB1-CP-002" WIRING SCHEMATICS
662	SUB1-E-061	SUBSTATION NO. 1 FIELD INTERFACE CONTROL POWER WIRING SCHEMATICS - PROPOSED (SHEET 1 OF 2)
663	SUB1-E-062	SUBSTATION NO. 1 FIELD INTERFACE CONTROL POWER WIRING SCHEMATICS - PROPOSED (SHEET 2 OF 2)
664	SUB1-E-063	SUBSTATION NO. 1 LIGHTING CONTROL PANEL CONTROL WIRING SCHEMATIC - PROPOSED
665	SUB1-E-064	SUBSTATION NO. 1 TYPICAL GASEOUS AIR ABSORPTION SCRUBBER CONTROL WIRING SCHEMATIC - PROPOSED
666	SUB1-E-065	SUBSTATION NO. 1 LIGHTING CONTACTOR CONTROL WIRING SCHEMATIC - PROPOSED
667	SUB1-E-066	SUBSTATION NO. 1 POWER WIRING SCHEMATICS - PROPOSED (SHEET 1 OF 2)
668	SUB1-E-067	SUBSTATION NO. 1 POWER WIRING SCHEMATICS - PROPOSED (SHEET 2 OF 2)
669	SUB1-E-068	SUBSTATION NO. 1 MISCELLANEOUS AUXILIARY WIRING SCHEMATICS - PROPOSED
670	SUB1-E-069	SUBSTATION NO. 1 PANEL SCHEDULE PROPOSED (SHEET 1 OF 4)
671	SUB1-E-070	SUBSTATION NO. 1 PANEL SCHEDULE PROPOSED (SHEET 2 OF 4)
672	SUB1-E-071	SUBSTATION NO. 1 PANEL SCHEDULE PROPOSED (SHEET 3 OF 4)
673	SUB1-E-072	SUBSTATION NO. 1 PANEL SCHEDULE PROPOSED (SHEET 4 OF 4)
674	SUB1-I-TELE1	SUBSTATION NO. 1 TELEPHONE SYSTEM - PROPOSED (SHEET 1 OF 2)
675	SUB1-I-TELE2	SUBSTATION NO. 1 TELEPHONE SYSTEM - PROPOSED (SHEET 2 OF 2)
676	SUB1-I-001	SUBSTATION NO. 1 PLC SYSTEM ARCHITECTURE - PROPOSED
677	SUB1-I-002	SUBSTATION NO. 1 PLC SYSTEM LOOP DIAGRAM - PROPOSED (SHEET 1 OF 3)
678	SUB1-I-003	SUBSTATION NO. 1 PLC SYSTEM LOOP DIAGRAM - PROPOSED (SHEET 2 OF 3)
679	SUB1-I-004	SUBSTATION NO. 1 PLC SYSTEM LOOP DIAGRAM - PROPOSED (SHEET 3 OF 3)
680	SUB1-I-005	SUBSTATION NO. 1 HVAC PROCESS AND INSTRUMENTATION DIAGRAM - PROPOSED (SHEET 1 OF 2)
681	SUB1-I-006	SUBSTATION NO. 1 HVAC PROCESS AND INSTRUMENTATION DIAGRAM - PROPOSED (SHEET 2 OF 2)
682	SUB1-I-007	SUBSTATION NO. 1 MAIN CONTROL PANEL SUB1-MCP-001 FRONT ELEVATION PROPOSED (SHEET 1 OF 2)
683	SUB1-I-008	SUBSTATION NO. 1 MAIN CONTROL PANEL SUB1-MCP-001 FRONT ELEVATION PROPOSED (SHEET 2 OF 2)
684	SUB2-E-001	ELECTRICAL SUBSTATION NO. 2 DETAILED ONE-LINE DIAGRAM EXISTING (SHEET 1 OF 11)
685	SUB2-E-002	ELECTRICAL SUBSTATION NO. 2 DETAILED ONE-LINE DIAGRAM EXISTING (SHEET 2 OF 11)
686	SUB2-E-003	ELECTRICAL SUBSTATION NO. 2 DETAILED ONE-LINE DIAGRAM EXISTING (SHEET 3 OF 11)
687	SUB2-E-004	ELECTRICAL SUBSTATION NO. 2 DETAILED ONE-LINE DIAGRAM EXISTING (SHEET 4 OF 11)
688	SUB2-E-005	ELECTRICAL SUBSTATION NO. 2 DETAILED ONE-LINE DIAGRAM EXISTING (SHEET 5 OF 11)
689	SUB2-E-006	ELECTRICAL SUBSTATION NO. 2 DETAILED ONE-LINE DIAGRAM EXISTING (SHEET 6 OF 11)
690	SUB2-E-007	ELECTRICAL SUBSTATION NO. 2 DETAILED ONE-LINE DIAGRAM EXISTING (SHEET 7 OF 11)
691	SUB2-E-008	ELECTRICAL SUBSTATION NO. 2 DETAILED ONE-LINE DIAGRAM EXISTING (SHEET 8 OF 11)
692	SUB2-E-009	ELECTRICAL SUBSTATION NO. 2 DETAILED ONE-LINE DIAGRAM EXISTING (SHEET 9 OF 11)
693	SUB2-E-010	ELECTRICAL SUBSTATION NO. 2 DETAILED ONE-LINE DIAGRAM EXISTING (SHEET 10 OF 11)
694	SUB2-E-011	ELECTRICAL SUBSTATION NO. 2 DETAILED ONE-LINE DIAGRAM EXISTING (SHEET 11 OF 11)
695	SUB2-E-012	ELECTRICAL SUBSTATION NO. 2 EQUIPMENT LOCATION PLAN - EXISTING
696	SUB2-E-013	ELECTRICAL SUBSTATION NO. 2 15kV POWER CONDUIT ROUTING PLAN - EXISTING
697	SUB2-E-014	ELECTRICAL SUBSTATION NO. 2 UNDERGROUND DUCTBANK PLAN - EXISTING
698	SUB2-E-015	ELECTRICAL SUBSTATION NO. 2 GROUNDING PLAN - EXISTING
699	SUB2-E-016	ELECTRICAL SUBSTATION NO. 2 SUB2-SWGR-1L MAIN BREAKER "VCB-1L05" CONTROL LOGIC - EXISTING
700	SUB2-E-017	ELECTRICAL SUBSTATION NO. 2 SUB2-SWGR-1L TIE BREAKER "VCB-1L06" CONTROL LOGIC - EXISTING
701	SUB2-E-018	ELECTRICAL SUBSTATION NO. 2 SUB2-SWGR-1L FEEDER BREAKER "VCB-1L07" CONTROL LOGIC - EXISTING
702	SUB2-E-019	ELECTRICAL SUBSTATION NO. 2 SUB2-SWGR-1L FEEDER BREAKER "VCB-1L10" CONTROL LOGIC - EXISTING
703	SUB2-E-020	ELECTRICAL SUBSTATION NO. 2 SUB2-SWGR-1R MAIN BREAKER "VCB-1R05" CONTROL LOGIC - EXISTING
704	SUB2-E-021	ELECTRICAL SUBSTATION NO. 2 SUB2-SWGR-1R TIE BREAKER "VCB-1R06" CONTROL LOGIC - EXISTING
705	SUB2-E-022	ELECTRICAL SUBSTATION NO. 2 SUB2-SWGR-1R FEEDER BREAKER "VCB-1R07" CONTROL LOGIC - EXISTING
706	SUB2-E-023	ELECTRICAL SUBSTATION NO. 2 SUB2-SWGR-1R FEEDER BREAKER "VCB-1R10" CONTROL LOGIC - EXISTING
707	SUB2-E-024	SUBSTATION NO. 2 DC BREAKER CONTROL POWER WIRING SCHEMATICS - EXISTING
708	SUB2-E-025	SUBSTATION NO. 2 MAIN CONTROL PANEL "SUB2-MCP-001" PLC I/O POINTS - EXISTING
709	SUB2-E-026	SUBSTATION NO. 2 PANEL SCHEDULE EXISTING (SHEET 1 OF 3)
710	SUB2-E-027	SUBSTATION NO. 2 PANEL SCHEDULE EXISTING (SHEET 2 OF 3)
711	SUB2-E-028	SUBSTATION NO. 2 PANEL SCHEDULE EXISTING (SHEET 3 OF 3)
712	SUB2-E-029	SUBSTATION NO. 2 COMMUNICATION EQUIPMENT ELEVATIONS - EXISTING
713	SUB2-E-030	ELECTRICAL SUBSTATION NO. 2 DETAILED ONE-LINE DIAGRAM DEMOLITION (SHEET 1 OF 11)
714	SUB2-E-031	ELECTRICAL SUBSTATION NO. 2 DETAILED ONE-LINE DIAGRAM DEMOLITION (SHEET 2 OF 11)
715	SUB2-E-032	ELECTRICAL SUBSTATION NO. 2 DETAILED ONE-LINE DIAGRAM DEMOLITION (SHEET 3 OF 11)
716	SUB2-E-033	ELECTRICAL SUBSTATION NO. 2 DETAILED ONE-LINE DIAGRAM DEMOLITION (SHEET 4 OF 11)
717	SUB2-E-034	ELECTRICAL SUBSTATION NO. 2 DETAILED ONE-LINE DIAGRAM DEMOLITION (SHEET 5 OF 11)
718	SUB2-E-035	ELECTRICAL SUBSTATION NO. 2 DETAILED ONE-LINE DIAGRAM DEMOLITION (SHEET 6 OF 11)
719	SUB2-E-036	ELECTRICAL SUBSTATION NO. 2 DETAILED ONE-LINE DIAGRAM DEMOLITION (SHEET 7 OF 11)
720	SUB2-E-037	ELECTRICAL SUBSTATION NO. 2 DETAILED ONE-LINE DIAGRAM DEMOLITION (SHEET 8 OF 11)
721	SUB2-E-038	ELECTRICAL SUBSTATION NO. 2 DETAILED ONE-LINE DIAGRAM DEMOLITION (SHEET 9 OF 11)
722	SUB2-E-039	ELECTRICAL SUBSTATION NO. 2 DETAILED ONE-LINE DIAGRAM DEMOLITION (SHEET 10 OF 11)
723	SUB2-E-040	ELECTRICAL SUBSTATION NO. 2 DETAILED ONE-LINE DIAGRAM DEMOLITION (SHEET 11 OF 11)
724	SUB2-E-041	ELECTRICAL SUBSTATION NO. 2 15kV POWER CONDUIT ROUTING PLAN - DEMOLITION
725	SUB2-E-042	ELECTRICAL SUBSTATION NO. 2 SUB2-SWGR-1L MAIN BREAKER "VCB-1L05" CONTROL LOGIC - DEMOLITION
726	SUB2-E-043	ELECTRICAL SUBSTATION NO. 2 SUB2-SWGR-1L TIE BREAKER "VCB-1L06" CONTROL LOGIC - DEMOLITION
727	SUB2-E-044	ELECTRICAL SUBSTATION NO. 2 SUB2-SWGR-1L FEEDER BREAKER "VCB-1L07" CONTROL LOGIC - DEMOLITION
728	SUB2-E-045	ELECTRICAL SUBSTATION NO. 2 SUB2-SWGR-1L FEEDER BREAKER "VCB-1L10" CONTROL LOGIC - DEMOLITION
729	SUB2-E-046	ELECTRICAL SUBSTATION NO. 2 SUB2-SWGR-1R MAIN BREAKER "VCB-1R05" CONTROL LOGIC - DEMOLITION
730	SUB2-E-047	ELECTRICAL SUBSTATION NO. 2 SUB2-SWGR-1R TIE BREAKER "VCB-1R06" CONTROL LOGIC - DEMOLITION
731	SUB2-E-048	ELECTRICAL SUBSTATION NO. 2 SUB2-SWGR-1R FEEDER BREAKER "VCB-1R07" CONTROL LOGIC - DEMOLITION
732	SUB2-E-049	ELECTRICAL SUBSTATION NO. 2 SUB2-SWGR-1R FEEDER BREAKER "VCB-1R10" CONTROL LOGIC - DEMOLITION
733	SUB2-E-050	SUBSTATION NO. 2 DC BREAKER CONTROL POWER WIRING SCHEMATICS - DEMOLITION
734	SUB2-E-051	SUBSTATION NO. 2 MAIN CONTROL PANEL "SUB2-MCP-001" PLC I/O POINTS - DEMOLITION
735	SUB2-E-052	SUBSTATION NO. 2 PANEL SCHEDULE DEMOLITION (SHEET 1 OF 3)
736	SUB2-E-053	SUBSTATION NO. 2 PANEL SCHEDULE DEMOLITION (SHEET 2 OF 3)
737	SUB2-E-054	SUBSTATION NO. 2 PANEL SCHEDULE DEMOLITION (SHEET 3 OF 3)
738	SUB2-E-055	ELECTRICAL SUBSTATION NO. 2 DETAILED ONE-LINE DIAGRAM RENOVATION (SHEET 1 OF 11)
739	SUB2-E-056	ELECTRICAL SUBSTATION NO. 2 DETAILED ONE-LINE DIAGRAM RENOVATION (SHEET 2 OF 11)
740	SUB2-E-057	ELECTRICAL SUBSTATION NO. 2 DETAILED ONE-LINE DIAGRAM RENOVATION (SHEET 3 OF 11)
741	SUB2-E-058	ELECTRICAL SUBSTATION NO. 2 DETAILED ONE-LINE DIAGRAM RENOVATION (SHEET 4 OF 11)
742	SUB2-E-059	ELECTRICAL SUBSTATION NO. 2 DETAILED ONE-LINE DIAGRAM RENOVATION (SHEET 5 OF 11)
743	SUB2-E-060	ELECTRICAL SUBSTATION NO. 2 DETAILED ONE-LINE DIAGRAM RENOVATION (SHEET 6 OF 11)
744	SUB2-E-061	ELECTRICAL SUBSTATION NO. 2 DETAILED ONE-LINE DIAGRAM RENOVATION (SHEET 7 OF 11)
745	SUB2-E-062	ELECTRICAL SUBSTATION NO. 2 DETAILED ONE-LINE DIAGRAM RENOVATION (SHEET 8 OF 11)
746	SUB2-E-063	ELECTRICAL SUBSTATION NO. 2 DETAILED ONE-LINE DIAGRAM RENOVATION (SHEET 9 OF 11)
747	SUB2-E-064	ELECTRICAL SUBSTATION NO. 2 DETAILED ONE-LINE DIAGRAM RENOVATION (SHEET 10 OF 11)
748	SUB2-E-065	ELECTRICAL SUBSTATION NO. 2 DETAILED ONE-LINE DIAGRAM RENOVATION (SHEET 11 OF 11)
749	SUB2-E-066	ELECTRICAL SUBSTATION NO. 2 15kV POWER CONDUIT ROUTING PLAN - RENOVATION
750	SUB2-E-067	ELECTRICAL SUBSTATION NO. 2 AUXILIARY AND I&C PLAN - RENOVATION
751	SUB2-E-068	ELECTRICAL SUBSTATION NO. 2 UNDERGROUND DUCTBANK PLAN - RENOVATION
752	SUB2-E-069	ELECTRICAL SUBSTATION NO. 2 GROUNDING PLAN - RENOVATION
753	SUB2-E-070	ELECTRICAL SUBSTATION NO. 2 SUB2-SWGR-1L MAIN BREAKER "VCB-1L05" CONTROL LOGIC - RENOVATION (SHEET 1 OF 2)
754	SUB2-E-071	ELECTRICAL SUBSTATION NO. 2 SUB2-SWGR-01L MAIN BREAKER "VCB-1L05" CONTROL LOGIC - RENOVATION (SHEET 2 OF 2)
755	SUB2-E-072	ELECTRICAL SUBSTATION NO. 2 SUB2-SWGR-1L TIE BREAKER "VCB-1L06" CONTROL LOGIC - RENOVATION (SHEET 1 OF 2)
756	SUB2-E-073	ELECTRICAL SUBSTATION NO. 2 SUB2-SWGR-1L TIE BREAKER "VCB-1L06" CONTROL LOGIC - RENOVATION (SHEET 2 OF 2)
757	SUB2-E-074	ELECTRICAL SUBSTATION NO. 2 SUB2-SWGR-1L FEEDER BREAKER "VCB-1L07" CONTROL LOGIC - RENOVATION
758	SUB2-E-075	ELECTRICAL SUBSTATION NO. 2 SUB2-SWGR-1L FEEDER BREAKER "VCB-1L10" CONTROL LOGIC - RENOVATION
759	SUB2-E-076	ELECTRICAL SUBSTATION NO. 2 SUB2-SWGR-1R MAIN BREAKER "VCB-1R05" CONTROL LOGIC - RENOVATION (SHEET 1 OF 2)
760	SUB2-E-077	ELECTRICAL SUBSTATION NO. 2 SUB2-SWGR-1R MAIN BREAKER "VCB-1R05" CONTROL LOGIC - RENOVATION (SHEET 2 OF 2)
761	SUB2-E-078	ELECTRICAL SUBSTATION NO. 2 SUB2-SWGR-1R TIE BREAKER "VCB-1R06" CONTROL LOGIC - RENOVATION (SHEET 1 OF 2)
762	SUB2-E-079	ELECTRICAL SUBSTATION NO. 2 SUB2-SWGR-1R TIE BREAKER "VCB-1R06" CONTROL LOGIC - RENOVATION (SHEET 2 OF 2)
763	SUB2-E-080	ELECTRICAL SUBSTATION NO. 2 SUB2-SWGR-1R FEEDER BREAKER "VCB-1R07" CONTROL LOGIC - RENOVATION
764	SUB2-E-081	ELECTRICAL SUBSTATION NO. 2 SUB2-SWGR-1R FEEDER BREAKER "VCB-1R10" CONTROL LOGIC - RENOVATION
765	SUB2-E-082	SUBSTATION NO. 2 DC BREAKER CONTROL POWER WIRING SCHEMATICS - RENOVATION
766	SUB2-E-083	SUBSTATION NO. 2 MAIN CONTROL PANEL "SUB2-MCP-001" PLC I/O POINTS - RENOVATION
767	SUB2-E-084	SUBSTATION NO. 2 SUBSTATION MANAGEMENT CONTROL PANEL "SUB2-CP-002" WIRING SCHEMATICS

BAR LENGTH ON ORIGINAL DRAWING EQUALS ONE INCH, ADJUST SCALE ACCORDINGLY.

REUSE OF DOCUMENTS

This document, and the designs incorporated herein, is an instrument of professional service that has been developed, designed and prepared by Harutunian Engineering, Inc., and is not to be used, in whole or in part, for any other project without giving written notice to Harutunian Engineering, Inc.

NO.	DATE:	DESCRIPTION

HARUTUNIAN ENGINEERING INCORPORATED

TEXAS FIRM REGISTRATION NUMBER F-2408

ENGINEERING AND ENVIRONMENTAL CONSULTANTS
8100 CROSS PARK DRIVE
AUSTIN, TEXAS 78754

STATE OF TEXAS
SHANT HARUTUNIAN
87735
REGISTERED
PROFESSIONAL ENGINEER
10/7/2019

DESIGNED BY:	HEI
CHECKED BY:	HEI
APPROVED BY:	HEI
SUBMITTAL DATE:	OCTOBER 2019
SCALE:	NTS

SOUTH AUSTIN REGIONAL WASTEWATER TREATMENT PLANT
ELECTRICAL SUBSTATION NO. 1 REPLACEMENT PROJECT
CIP I.D.# 3333.032

INDEX OF SHEETS
(SHEET 5 OF 6)

PROJECT NO: 2014-300 | SHT. 574 OF 866 | DWG NO. G-IOS-005

(CONTINUED)

SHEET NO.	DRAWING NO.	TITLE
768	SUB2-E-085	SUBSTATION NO. 2 PANEL SCHEDULE RENOVATION (SHEET 1 OF 3)
769	SUB2-E-086	SUBSTATION NO. 2 PANEL SCHEDULE RENOVATION (SHEET 2 OF 3)
770	SUB2-E-087	SUBSTATION NO. 2 PANEL SCHEDULE RENOVATION (SHEET 3 OF 3)
771	SUB2-E-088	SUBSTATION NO. 2 COMMUNICATION AND LOW VOLTAGE EQUIPMENT FRONT ELEVATIONS - RENOVATION
772	SUB2-I-001	ELECTRICAL SUBSTATION NO. 2 PLC SYSTEM ARCHITECTURE - EXISTING
773	SUB2-I-002	ELECTRICAL SUBSTATION NO. 2 PLC SYSTEM ARCHITECTURE - RENOVATION
774	UPB-E-001	UTILITY PUMP BUILDING DETAILED ONE-LINE DIAGRAM
775	UPB-E-002	UTILITY PUMP BUILDING EQUIPMENT LOCATION PLAN - EXISTING
776	WR-E-001	WATER REUSE DETAILED ONE-LINE DIAGRAM (SHEET 1 OF 4)
777	WR-E-002	WATER REUSE DETAILED ONE-LINE DIAGRAM (SHEET 2 OF 4)
778	WR-E-003	WATER REUSE DETAILED ONE-LINE DIAGRAM (SHEET 3 OF 4)
779	WR-E-004	WATER REUSE DETAILED ONE-LINE DIAGRAM (SHEET 4 OF 4)
780	WR-E-005	WATER REUSE STATION EQUIPMENT LOCATION PLAN - EXISTING
781	TD-G-001	CIP SIGN
782	TD-C-001	STANDARD CIVIL DETAILS - SHEET 1
783	TD-C-002	STANDARD CIVIL DETAILS - SHEET 2
784	TD-C-003	STANDARD CIVIL DETAILS - SHEET 3
785	TD-C-004	STANDARD CIVIL DETAILS - SHEET 4
786	TD-C-005	EROSION AND SEDIMENTATION DETAILS
787	TD-C-006	TREE PROTECTION DETAILS
788	TD-C-007	ENVIRONMENTAL NOTES
789	TD-C-008	DRAINAGE DETAILS
790	TD-S-001	STRUCTURAL TYPICAL DETAILS SHEET 1 OF 4
791	TD-S-002	STRUCTURAL TYPICAL DETAILS SHEET 2 OF 4
792	TD-S-003	STRUCTURAL TYPICAL DETAILS SHEET 3 OF 4
793	TD-S-004	STRUCTURAL TYPICAL DETAILS SHEET 4 OF 4
794	TD-S-005	ELECTRICAL MANHOLE SCHEDULE AND WALL ELEVATION (TYPE 1)
795	TD-S-006	ELECTRICAL MANHOLE SCHEDULE AND WALL ELEVATION (TYPE 2)
796	TD-S-007	ELECTRICAL MANHOLE SCHEDULE AND WALL ELEVATION (TYPE 3)
797	TD-S-008	ELECTRICAL MANHOLE SCHEDULE AND WALL ELEVATION (TYPE 4)
798	TD-S-009	ELECTRICAL MANHOLE SCHEDULE AND WALL ELEVATION (TYPE 5)
799	TD-S-010	ELECTRICAL MANHOLES STRUCTURAL PLAN AND SECTIONS
800	TD-S-011	ELECTRICAL MANHOLES STRUCTURAL SECTIONS
801	TD-H-001	CONDENSING UNIT SYSTEM INSTALLATION TYPICAL DETAILS
802	TD-H-002	HVAC PIPE WALL PENETRATION SLEEVE TYPICAL DETAILS
803	TD-H-003	ACU, AIR DEVICE AND SCRUBBER ASSEMBLY TYPICAL DETAILS
804	TD-H-004	SCRUBBER INSTRUMENT PIPING & TRANSMITTER INSTALLATION TYPICAL DETAILS
805	TD-E-001	ELECTRICAL STANDARD DETAILS I
806	TD-E-002	ELECTRICAL STANDARD DETAILS II
807	TD-E-003	ELECTRICAL STANDARD DETAILS III
808	TD-E-004	ELECTRICAL STANDARD DETAILS IV
809	TD-E-005	ELECTRICAL STANDARD DETAILS V
810	TD-E-006	ELECTRICAL STANDARD DETAILS VI
811	TD-E-007	ELECTRICAL STANDARD DETAILS VII
812	TD-E-008	ELECTRICAL STANDARD DETAILS VIII
813	TD-E-009	ELECTRICAL STANDARD DETAILS IX
814	TD-E-010	ELECTRICAL STANDARD DETAILS X
815	TD-E-011	ELECTRICAL STANDARD DETAILS XI
816	TD-E-012	ELECTRICAL STANDARD DETAILS XII
817	TD-E-013	ELECTRICAL STANDARD DETAILS XIII
818	TD-E-014	ELECTRICAL STANDARD DETAILS XIV
819	TD-E-015	ELECTRICAL STANDARD DETAILS XV
820	TD-I-001	INSTRUMENTATION STANDARD DETAILS I
821	A-G-001A	COVER SHEET
822	A-G-99B	GENERAL CONSTRUCTION NOTES
823	A-G-100D	GENERAL CONSTRUCTION NOTES
824	A-G-022D	LOCATION KEYMAP AND CONSTRUCTION ACCESS
825	A-D-017C	DIMENSIONAL CONTROL PLAN
826	A-D-027C	DIMENSIONAL CONTROL PLAN
827	A-D-037D	DIMENSIONAL CONTROL PLAN
828	A-D-038C	DIMENSIONAL CONTROL PLAN
829	A-D-039C	DIMENSIONAL CONTROL PLAN
830	A-D-045C	DIMENSIONAL CONTROL PLAN
831	A-D-046C	DIMENSIONAL CONTROL PLAN
832	A-D-047C	DIMENSIONAL CONTROL PLAN
833	A-D-050C	DIMENSIONAL CONTROL PLAN
834	A-D-051C	DIMENSIONAL CONTROL PLAN
835	A-D-052C	DIMENSIONAL CONTROL PLAN
836	A-D-057C	DIMENSIONAL CONTROL PLAN
837	A-D-058C	DIMENSIONAL CONTROL PLAN
838	S-C-037C	EXCAVATION, GRADING AND PAVING PLAN
839	TD-C-002B	STANDARD CIVIL DETAILS 2
840	S-U-237C	SITE UTILITIES - DUCT BANK (CIVIL) - PROPOSED
841	S-U-245B	SITE UTILITIES - DUCT BANK (CIVIL) - PROPOSED
842	G-C-001A	PROPERTY BOUNDARY
843	G-C-037A	SUBSTATION SITE PLAN
844	G-C-100A	DRAINAGE AREA MAP AND DETENTION PLAN
845	G-C-137A	WATER QUALITY CONTROL PLAN
846	S-C-100A	GRADING AND DRAINAGE
847	TD-C-008A	DRAINAGE DETAILS
848	A-C-027A	EROSION CONTROL SHEET 1
849	A-C-037A	EROSION CONTROL SHEET 2
850	A-C-038A	EROSION CONTROL SHEET 3
851	A-C-039A	EROSION CONTROL SHEET 4
852	A-C-045A	EROSION CONTROL SHEET 5
853	A-C-046A	EROSION CONTROL SHEET 6
854	A-C-047A	EROSION CONTROL SHEET 7
855	A-C-050A	EROSION CONTROL SHEET 8
856	A-C-051A	EROSION CONTROL SHEET 9
857	A-C-052A	EROSION CONTROL SHEET 10
858	A-C-057A	EROSION CONTROL SHEET 11
859	A-C-058A	EROSION CONTROL SHEET 12
860	T-C-017B	REFERENCE DRAWING
861	TD-C-005A	EROSION AND SEDIMENTATION DETAILS
862	TD-C-006A	TREE PROTECTION DETAILS
863	TD-C-007A	ENVIRONMENTAL NOTES
864	LP001	LANDSCAPE AND IRRIGATION NOTES
865	LP101	RAIN GARDEN PLANTING PLAN
866	LP102	REVEGETATION PLAN

BAR LENGTH ON ORIGINAL DRAWING EQUALS ONE INCH, ADJUST SCALE ACCORDINGLY.

REUSE OF DOCUMENTS

This document, and the designs incorporated herein, is an instrument of professional service that has been developed, designed and prepared by Harutunian Engineering, Inc., and is not to be used, in whole or in part, for any other project without giving written notice to Harutunian Engineering, Inc.

NO.	DATE:	DESCRIPTION

HARUTUNIAN ENGINEERING INCORPORATED

TEXAS FIRM REGISTRATION NUMBER F-2408

ENGINEERING AND ENVIRONMENTAL CONSULTANTS
8100 CROSS PARK DRIVE
AUSTIN, TEXAS 78754

STATE OF TEXAS
SHANT HARUTUNIAN
87735
REGISTERED
PROFESSIONAL ENGINEER
10/7/2019

DESIGNED BY:	HEI
CHECKED BY:	HEI
APPROVED BY:	HEI
SUBMITTAL DATE:	OCTOBER 2019
SCALE:	NTS

SOUTH AUSTIN REGIONAL WASTEWATER TREATMENT PLANT
ELECTRICAL SUBSTATION NO. 1 REPLACEMENT PROJECT
CIP I.D.# 3333.032

INDEX OF SHEETS
(SHEET 6 OF 6)

PROJECT NO: 2014-300 | SHT. 575 OF 866 | DWG NO. G-IOS-006

NOTES:

1. SELECT FILL TO BE PLACED UNDER TRAFFIC BEARING SURFACES, OTHER SLOPES MAY BE COMMON FILL.

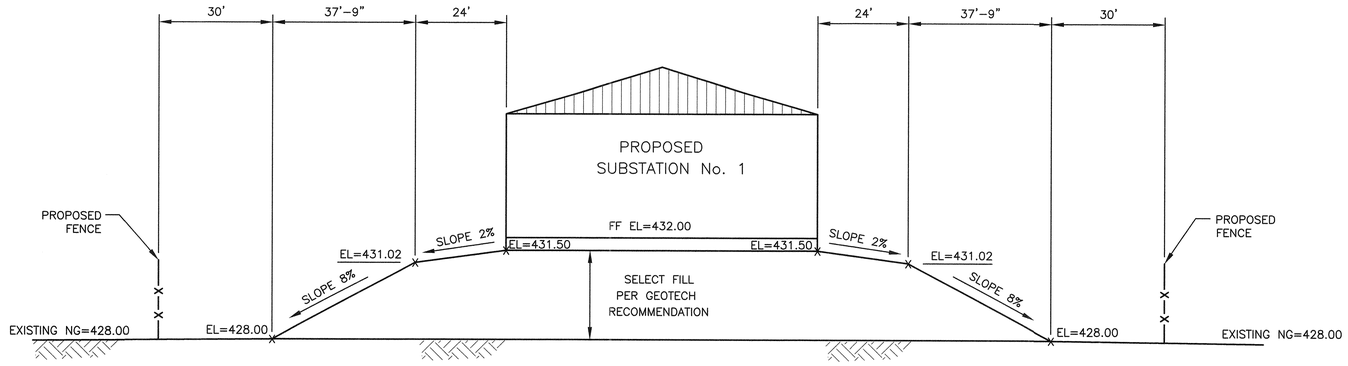

SECTION A
SCALE: 1"=20' HORIZ
SCALE: 1"=3' VERT
S-C-037

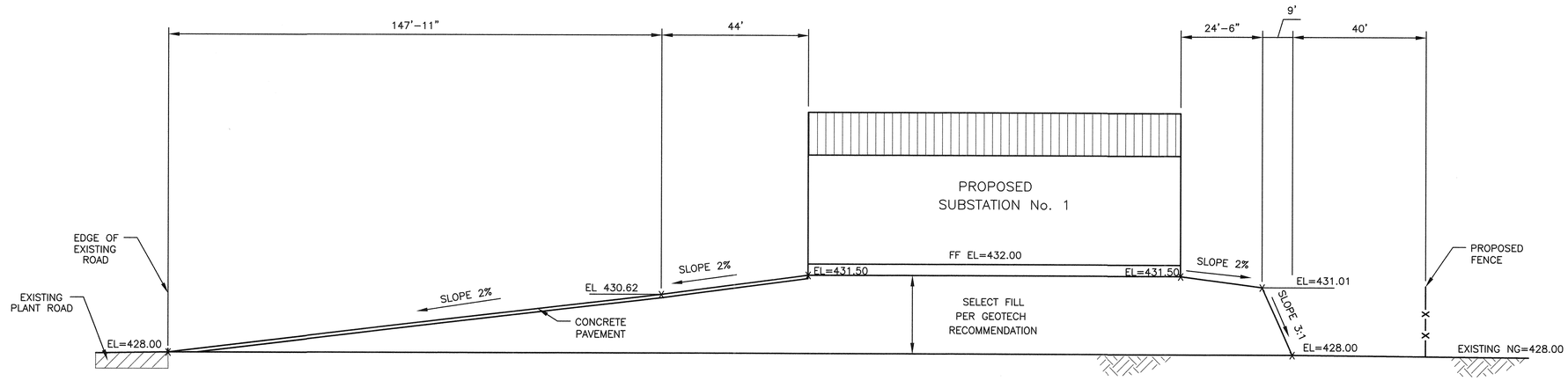

SECTION B
SCALE: 1"=20' HORIZ
SCALE: 1"=3' VERT
S-C-037

E:\60526617 SARWWTP ELEC SUB NO. 1\900-WORKINGDOCS-CAD\910 CADD\20-SHEETS\SUB1-C-001.DWG BY: GADHIAT DATE: 9/18/2019 9:12 AM

BAR LENGTH ON ORIGINAL DRAWING EQUALS ONE INCH, ADJUST SCALE ACCORDINGLY.

AECOM
AECOM TECHNICAL SERVICES INC.
9400 AMBERGLEN BOULEVARD
AUSTIN, TEXAS 78729
WWW.AECOM.COM
TBPE REG. NO. F-3580

STATE OF TEXAS
CASEY G. WAUTERS
93889
LICENSED
PROFESSIONAL ENGINEER
4/23/19

NO.	DATE:	DESCRIPTION

HARUTUNIAN ENGINEERING INCORPORATED
TEXAS FIRM REGISTRATION NUMBER F-2408
ENGINEERING AND ENVIRONMENTAL CONSULTANTS
8100 CROSS PARK DRIVE
AUSTIN, TEXAS 78754

REUSE OF DOCUMENTS

This document, and the designs incorporated herein, is an instrument of professional service that has been developed, designed and prepared by Harutunian Engineering, Inc., and is not to be used, in whole or in part, for any other project without giving written notice to Harutunian Engineering, Inc.

DESIGNED BY:	CW
CHECKED BY:	JNB
APPROVED BY:	SGE
SUBMITTAL DATE:	OCTOBER 2019
SCALE:	AS NOTED

SOUTH AUSTIN REGIONAL WASTEWATER TREATMENT PLANT
ELECTRICAL SUBSTATION NO. 1 REPLACEMENT PROJECT
CIP I.D.# 3333.032

PROPOSED SUBSTATION CROSS SECTIONS

PROJECT NO: 2014-300 | SHT. 576 OF 866 | DWG NO. SUB1-C-001

PROJECT DATA: SUBSTATION NO. 1

GOVERNING CODES

2015 INTERNATIONAL ENERGY CONSERVATION CODE
2015 INTERNATIONAL BUILDING CODE
2015 UNIFORM MECHANICAL CODE
2015 UNIFORM PLUMBING CODE
2011 NATIONAL ELECTRIC CODE
2015 INTERNATIONAL FIRE CODE
2010 ADA STANDARDS FOR ACCESSIBLE DESIGN
TEXAS ACCESSIBILITY STANDARDS 2012

BUILDING CODE DATA – IBC CHAPTER 3

OCCUPANCY GROUP: UTILITY AND MISCELLANEOUS

U BUILDINGS AND STRUCTURES OF AN ACCESSORY CHARACTER AND MISCELLANEOUS STRUCTURES NOT CLASSIFIED IN ANY SPECIFIC OCCUPANCY (THE NEW SUBSTATION IS A SHELTER FOR ELECTRICAL EQUIPMENT AND IS NOT INTENDED FOR HUMAN OCCUPANCY)

GENERAL BUILDING LIMITATIONS – IBC CHAPTER 5

ALLOWABLE HEIGHT AND BUILDING AREA (TABLE 504.4)

TYPE IIA

AREA (SF) 19,000 (BASE) + 9,120 (FRONTAGE INCREASE) = 28,120

HEIGHT 4 STORY

FRONTAGE INCREASE

If=[F/P-0.25]W/30

If=0.48

ACTUAL AREA (SF) 9,233 (SUBSTATION)

ACTUAL HEIGHT 1 STORY

CONSTRUCTION TYPE – IBC CHAPTER 6

FIRE RESISTIVE REQUIREMENTS FOR BUILDING ELEMENTS (TYPE IIA–TABLE 601)

BEARING WALLS	
INTERIOR	1 HOUR
EXTERIOR	1 HOUR
NONBEARING WALLS	
EXTERIOR	SEE BELOW
PRIMARY STRUCTURAL FRAME INTERIOR	1 HOUR
PARTITIONS	NO REQUIREMENTS
FLOOR AND FLOOR/CLG	1 HOUR
ROOF AND ROOF/CLG	1 HOUR

EXTERIOR WALL/OPENING PROTECTION (TABLE 602 AND 705.8)

EXTERIOR WALLS	1 HOUR, LESS THAN 30 FEET
	NO RATING 30 FEET OR GREATER
OPENINGS	1 HOUR LESS THAN 30 FEET
	UNLIMITED UNPROTECTED OPENINGS GREATER THAN 30 FEET

INTERIOR FINISHES – IBC CHAPTER 8

FLAME SPREAD RATINGS OF MATERIALS AND FINISHES (TABLE 803.11)

CLASS A: FLAME SPREAD 0–25, SMOKE DEVELOPED 0–450
CLASS B: FLAME SPREAD 26–75, SMOKE DEVELOPED 0–450
CLASS C: FLAME SPREAD 76–200, SMOKE DEVELOPED 0–450

VERTICAL EXITS AND PASSAGEWAYS	NO RESTRICTIONS
EXIT ACCESS CORRIDORS	NO RESTRICTIONS
ROOMS AND ENCLOSED SPACES	NO RESTRICTIONS

NOMINAL OCCUPANCY LOAD AND MEANS OF EGRESS – SUBSTATION NO. 1

	AREA (sqft.)	OCCUPANT LOAD FACTOR (sqft.)	OCCUPANTS	REQUIRED EGRESS WIDTH PER OCCUPANT	REQUIRED EGRESS WIDTH
SUBSTATION	9,233	300	30.78*	0.20	6.16
EGRESS WIDTH PROVIDED (2 DOORS)					72.00

*NOMINAL OCCUPANCY FOR EGRESS CALCULATIONS. THE ACTUAL NUMBER OF PERSONS BY WHOM THE BUILDING IS OCCUPIABLE PER 2015 IBC 202, AND FOR WHOM PLUMBING FIXTURES ARE PROVIDED, IS 0.

1 A-001 CODE SUMMARY
NTS

ABBREVIATIONS

ABBR.	MATERIAL	ABBR.	MATERIAL
ACT	ACOUSTICAL CEILING TILE	O/USD	OPEN TO UNDERSIDE OF DECK (NO CEILING)
AL, ALUM	ALUMINUM	OH	OVERHEAD OBJECT/LINE
ANOD	ANNODIZED	PLYWD	PLYWOOD
CA	COLOR ANODIZED FINISH	PT	PAINTED
CL	CLOSET	(R)	REFURBISHED
CLA	CLEAR ANODIZED FINISH	SC	CONCRETE WITH PENETRATING SEALER
CLG	CEILING	SCW	SOLID CORE WOOD
CWS	CLEAR WOOD SEALER	STL	STEEL
CONC	CONCRETE	STN	STAINED
(E)	EXISTING	S.S.	STAINLESS STEEL
EXT	EXTERIOR	(S)	SIMILAR
GA	GUAGE	(T)	TEMPERED GLASS
GC	GENERAL CONTRACTOR	TP	THERMOSET POLYESTER FINISH AAMA 60.8
GL, GLZ	GLAZING (WINDOW, GLASS)	T & G	TOUNGE AND GROVE WOOD PLANKS
GYP BD	GYPSUM BOARD	TRAN	TRANSOM WINDOW
HM	HOLLOW METAL	VYL	VINYL
INS	INSULATED (REFER TO GLAZING SPECIFICATIONS)	VCT	VINYL COMPOSITION TILE
INT	INTERIOR	WP/GYP	WATER PROOF/GYPSUM BOARD (WHERE APPLICABLE)
MFG	MANUFACTURER	WD	WOOD
MS	MOP SINK	--	NO APPLIED FINISH / NOT APPLICABLE
MTL	METAL		
(N)	NEW		

2 A-001 PROJECT ABBREVIATIONS
NTS

DOOR SCHEDULE

DOOR NO.	DOOR TYPE	NOMINAL SIZE WIDTH	NOMINAL SIZE HEIGHT	NOMINAL SIZE THICKNESS	MATERIAL	FINISH	GLAZING	FRAME	DETAILS HEAD	DETAILS JAMB	DETAILS SILL	REMARKS	HARDWARE
01	A	3'-0"	7'-0"	1-3/4"	AL	CA	"	AL	1/A002	4/A002	5/A002	ALUMINUM DOOR	a
02	A	3'-0"	7'-0"	1-3/4"	AL	CA	"	AL	1/A002	4/A002	5/A002	ALUMINUM DOOR	a
03	A	3'-0"	7'-0"	1-3/4"	AL	CA	"	AL	1/A002	4/A002	5/A002	ALUMINUM DOOR	a
04	C	8'-0"	12'-0"	15/16"	AL	CA	"	AL	2/A002	5/A002	"	INSULATED ROLLING ALUMINUM DOOR WITH PERIMETER WEATHERSEALS	
05	C	8'-0"	12'-0"	15/16"	AL	CA	"	AL	2/A002	5/A002	"	INSULATED ROLLING ALUMINUM DOOR WITH PERIMETER WEATHERSEALS	
06	C	8'-0"	12'-0"	15/16"	AL	CA	"	AL	2/A002	5/A002	"	INSULATED ROLLING ALUMINUM DOOR WITH PERIMETER WEATHERSEALS	
07	B	6'-0"	12'-0"	15/16"	AL	CA	"	AL	2/A002	5/A002	"	INSULATED ROLLING ALUMINUM DOOR WITH PERIMETER WEATHERSEALS	
08	C	8'-0"	12'-0"	15/16"	AL	CA	"	AL	2/A002	5/A002	"	INSULATED ROLLING ALUMINUM DOOR WITH PERIMETER WEATHERSEALS	
09	C	8'-0"	12'-0"	15/16"	AL	CA	"	AL	2/A002	5/A002	"	INSULATED ROLLING ALUMINUM DOOR WITH PERIMETER WEATHERSEALS	
10	A	3'-0"	7'-0"	1-3/4"	AL	CA	"	AL	1/A002	4/A002	5/A002	ALUMINUM DOOR	a
11	D	10'-0"	12'-0"	15/16"	AL	CA	"	AL	2/A002	5/A002	"	INSULATED ROLLING ALUMINUM DOOR WITH PERIMETER WEATHERSEALS	
12	C	8'-0"	12'-0"	15/16"	AL	CA	"	AL	2/A002	5/A002	"	INSULATED ROLLING ALUMINUM DOOR WITH PERIMETER WEATHERSEALS	
13	C	8'-0"	12'-0"	15/16"	AL	CA	"	AL	2/A002	5/A002	"	INSULATED ROLLING ALUMINUM DOOR WITH PERIMETER WEATHERSEALS	
14	B	6'-0"	12'-0"	15/16"	AL	CA	"	AL	2/A002	5/A002	"	INSULATED ROLLING ALUMINUM DOOR WITH PERIMETER WEATHERSEALS	
15	C	8'-0"	12'-0"	15/16"	AL	CA	"	AL	2/A002	5/A002	"	INSULATED ROLLING ALUMINUM DOOR WITH PERIMETER WEATHERSEALS	
16	C	8'-0"	12'-0"	15/16"	AL	CA	"	AL	2/A002	5/A002	"	INSULATED ROLLING ALUMINUM DOOR WITH PERIMETER WEATHERSEALS	
17	C	8'-0"	12'-0"	15/16"	AL	CA	"	AL	2/A002	5/A002	"	INSULATED ROLLING ALUMINUM DOOR WITH PERIMETER WEATHERSEALS	
18	C	8'-0"	12'-0"	15/16"	AL	CA	"	AL	2/A002	5/A002	"	INSULATED ROLLING ALUMINUM DOOR WITH PERIMETER WEATHERSEALS	
19	A	3'-0"	7'-0"	1-3/4"	AL	CA	"	AL	1/A002	4/A002	"	ALUMINUM DOOR	b
20	A	3'-0"	7'-0"	1-3/4"	AL	CA	"	AL	1/A002	4/A002	"	ALUMINUM DOOR	b

3 A-001 DOOR SCHEDULEE
NTS

HARDWARE GROUP a

TYPE	NUMBER	MANUFACTURER	MODEL	FINISH
BUTTS	1 1/2 PAIR (3)	HAGER	1191	US32D (STAINLESS)
LOCKSET	1	SARGENT	8200-70	US32D (STAINLESS)
CLOSER	1	LCN	4014	AL. POWDER COAT
WEATHERSTRIP	1	NGP	160VA	AL
SWEEP	1	NGP 1	02VA	AL
STOP	1	TRIMCO	1209W	---

HARDWARE GROUP b

TYPE	NUMBER	MANUFACTURER	MODEL	FINISH
BUTTS	1 1/2 PAIR (3)	HAGER	1191	US32D (STAINLESS)
LOCKSET	1	SARGENT	8200-72	US32D (STAINLESS)
CLOSER	1	LCN	4014	AL. POWDER COAT
STOP	1	TRIMCO	1209W	---

NOTE: CONTRACTOR TO FURNISH AND INSTALL ELECTRIC LOCKS, ALL ACCESSORIES REQUIRED FOR LOCK INSTALLATION, AND TEMPORARY (CONSTRUCTION) CORES COMPATIBLE WITH BEST COREMAX SYSTEM

4 A-001 DOOR HARDWARE SCHEDULE
NTS

WINDOW SCHEDULE

TYPE	NOMINAL SIZE WIDTH	NOMINAL SIZE HEIGHT	NOMINAL SIZE THICKNESS	MATERIAL	FINISH	GLAZING	DETAILS HEAD	DETAILS JAMB	DETAILS SILL	REMARKS
A	5'-4"	4'-8"	4 1/2"	AL	CA	INS	7/A002	8/A002	9/A002	

5 A-001 WINDOW SCHEDULEE
NTS

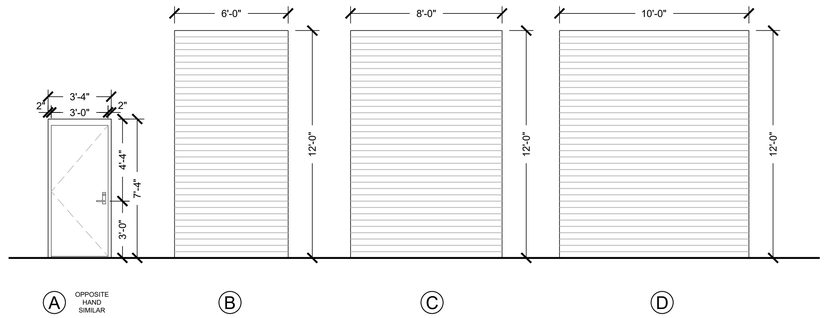

6 A-001 DOOR TYPES
NTS

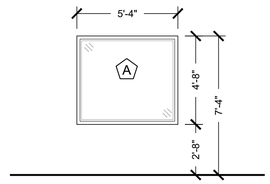

7 A-001 WINDOW TYPES
NTS

GENERAL NOTES

1. ALL CONCEALED AND EXPOSED BATT INSULATION INSTALLED ON THIS PROJECT SHALL HAVE A FLAME SPREAD INDEX OF NOT MORE THAN 25 AND A SMOKE DEVELOPED INDEX OF NOT MORE THAN 450, IN ACCORDANCE WITH ASTM E84.

2. MATERIAL PERFORMANCE STANDARDS AND INSTALLATION PROCEDURES FOR METAL PANEL ROOFING SYSTEM TO COMPLY WITH 2015-I.B.C. SECTIONS 1504.3.2 & 1507.4

ACCESSIBILITY NOTES

1. PER TEXAS ACCESSIBILITY STANDARDS 203.5: "SPACES FREQUENTED ONLY BY SERVICE PERSONNEL FOR MAINTENANCE, REPAIR, OR OCCASIONAL MONITORING OF EQUIPMENT SHALL NOT BE REQUIRED TO COMPLY WITH THESE REQUIREMENTS OR TO BE ON AN ACCESSIBLE ROUTE. MACHINERY SPACES INCLUDE, BUT ARE NOT LIMITED TO, ELEVATOR PITS OR ELEVATOR PENTHOUSES; MECHANICAL, ELECTRICAL OR COMMUNICATIONS EQUIPMENT ROOMS; PIPING OR EQUIPMENT CATWALKS; WATER OR SEWAGE TREATMENT PUMP ROOMS AND STATIONS; ELECTRIC SUBSTATIONS AND TRANSFORMER VAULTS; AND HIGHWAY AND TUNNEL UTILITY FACILITIES." THIS BUILDING IS AN ELECTRIC SUBSTATION, AND IS ACCORDINGLY EXPLICITLY EXEMPTED FROM COMPLIANCE WITH THE TEXAS ACCESSIBILITY STANDARDS.

8 A-001 PROJECT NOTES
NTS

BAR LENGTH ON ORIGINAL DRAWING EQUALS ONE INCH, ADJUST SCALE ACCORDINGLY.

mwm DesignGroup
305 E. Huntland Drive
Suite 200
Austin, Texas 78752
p: 512.453.0767
f: 512.453.1734

REGISTERED ARCHITECT JOWEN HARROD 16345 STATE OF TEXAS
23 SEPTEMBER 2019

NO.	DATE:	DESCRIPTION

HARUTUNIAN ENGINEERING INCORPORATED
TEXAS FIRM REGISTRATION NUMBER F-2408
ENGINEERING AND ENVIRONMENTAL CONSULTANTS
8100 CROSS PARK DRIVE
AUSTIN, TEXAS 78754

REUSE OF DOCUMENTS
This document, and the designs incorporated herein, is an instrument of professional service that has been developed, designed and prepared by Harutunian Engineering, Inc., and is not to be used, in whole or in part, for any other project without giving written notice to Harutunian Engineering, Inc.

DESIGNED BY: MWM
CHECKED BY: MWM
APPROVED BY: MWM
SUBMITTAL DATE: OCTOBER 2019
SCALE:

SOUTH AUSTIN REGIONAL WASTEWATER TREATMENT PLANT
ELECTRICAL SUBSTATION NO. 1 REPLACEMENT PROJECT
CIP I.D.# 3333.032

CODE SUMMARY AND GENERAL NOTES

PROJECT NO: 2014-300 | SHT. 577 OF 866 | DWG NO. SUB1-A-001

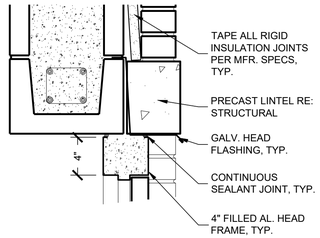

1 A-002 HEAD DETAIL
1 1/2" = 1'-0"

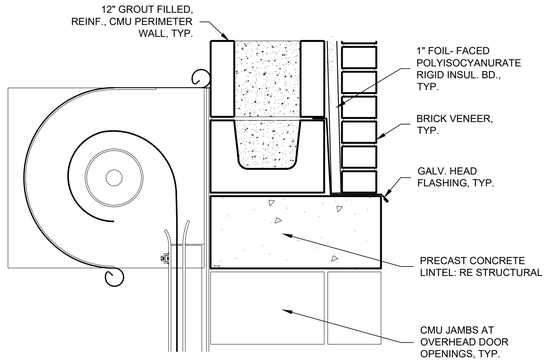

2 A-002 HEAD DETAIL
1 1/2" = 1'-0"

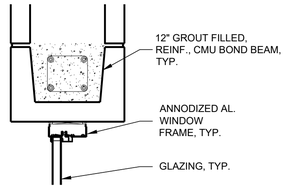

3 A-002 HEAD DETAIL (WINDOW)
1 1/2" = 1'-0"

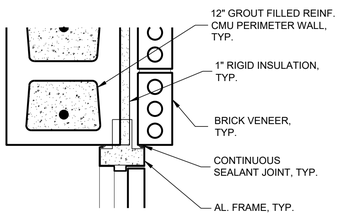

4 A-002 JAMB DETAIL
1 1/2" = 1'-0"

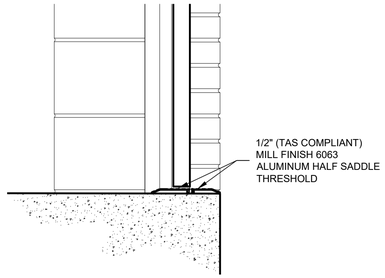

5 A-002 SILL DETAIL
1 1/2" = 1'-0"

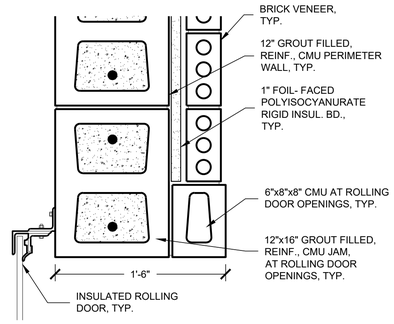

6 A-002 JAMB DETAIL
1 1/2" = 1'-0"

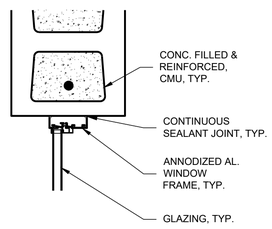

7 A-002 JAMB DETAIL (WINDOW)
1 1/2" = 1'-0"

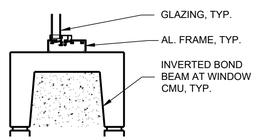

8 A-002 SILL DETAIL (WINDOW)
1 1/2" = 1'-0"

BAR LENGTH ON ORIGINAL DRAWING EQUALS ONE INCH, ADJUST SCALE ACCORDINGLY.

mwm DesignGroup
305 E. Huntland Drive
Suite 200
Austin, Texas 78752
p: 512.453.0767
f: 512.453.1734

REGISTERED ARCHITECT W. OWEN HARROD 16346 STATE OF TEXAS
23 SEPTEMBER 2019

NO.	DATE:	DESCRIPTION

HARUTUNIAN ENGINEERING INCORPORATED
TEXAS FIRM REGISTRATION NUMBER F-2408
ENGINEERING AND ENVIRONMENTAL CONSULTANTS
8100 CROSS PARK DRIVE
AUSTIN, TEXAS 78754

REUSE OF DOCUMENTS
This document, and the designs incorporated herein, is an instrument of professional service that has been developed, designed and prepared by Harutunian Engineering, Inc., and is not to be used, in whole or in part, for any other project without giving written notice to Harutunian Engineering, Inc.

DESIGNED BY: MWM
CHECKED BY: MWM
APPROVED BY: MWM
SUBMITTAL DATE: OCTOBER 2019
SCALE:

SOUTH AUSTIN REGIONAL WASTEWATER TREATMENT PLANT
ELECTRICAL SUBSTATION NO. 1 REPLACEMENT PROJECT
CIP I.D.# 3333.032

DETAILS

PROJECT NO: 2014-300 | SHT. 578 OF 866 | DWG NO. SUB1-A-002

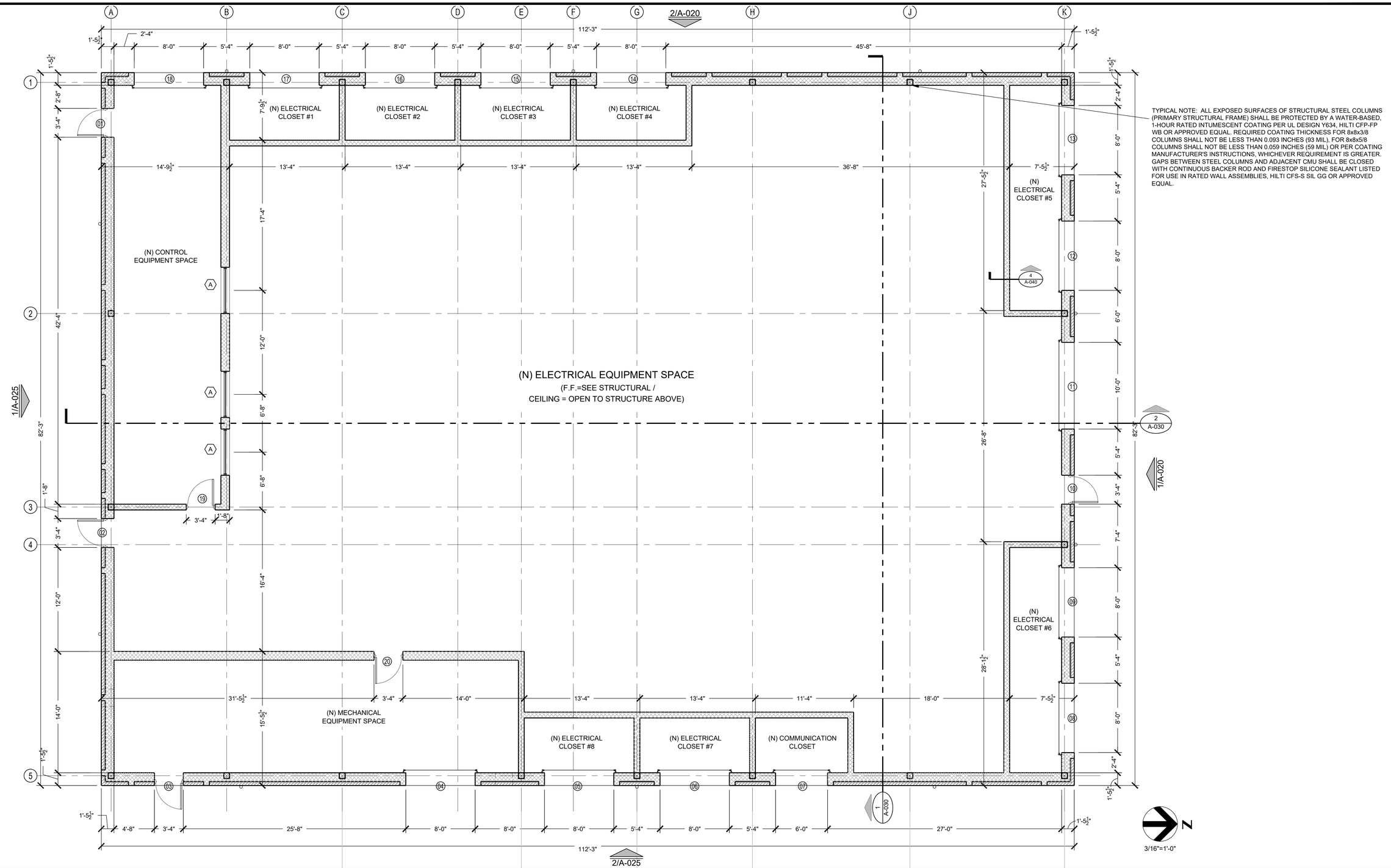

TYPICAL NOTE: ALL EXPOSED SURFACES OF STRUCTURAL STEEL COLUMNS (PRIMARY STRUCTURAL FRAME) SHALL BE PROTECTED BY A WATER-BASED, 1-HOUR RATED INTUMESCENT COATING PER UL DESIGN Y634, HILTI CFP-FP WB OR APPROVED EQUAL. REQUIRED COATING THICKNESS FOR 8x8x3/8 COLUMNS SHALL NOT BE LESS THAN 0.093 INCHES (93 MIL), FOR 8x8x5/8 COLUMNS SHALL NOT BE LESS THAN 0.059 INCHES (59 MIL) OR PER COATING MANUFACTURER'S INSTRUCTIONS, WHICHEVER REQUIREMENT IS GREATER. GAPS BETWEEN STEEL COLUMNS AND ADJACENT CMU SHALL BE CLOSED WITH CONTINUOUS BACKER ROD AND FIRESTOP SILICONE SEALANT LISTED FOR USE IN RATED WALL ASSEMBLIES, HILTI CFS-S SIL GG OR APPROVED EQUAL.

BAR LENGTH ON ORIGINAL DRAWING EQUALS ONE INCH, ADJUST SCALE ACCORDINGLY.

mwm DesignGroup
305 E. Huntland Drive
Suite 200
Austin, Texas 78752
p: 512.453.0767
f: 512.453.1734

REGISTERED ARCHITECT
16346
STATE OF TEXAS
23 SEPTEMBER 2019

NO.	DATE:	DESCRIPTION

HARUTUNIAN ENGINEERING INCORPORATED
TEXAS FIRM REGISTRATION NUMBER F-2408
ENGINEERING AND ENVIRONMENTAL CONSULTANTS
8100 CROSS PARK DRIVE
AUSTIN, TEXAS 78754

REUSE OF DOCUMENTS
This document, and the designs incorporated herein, is an instrument of professional service that has been developed, designed and prepared by Harutunian Engineering, Inc., and is not to be used, in whole or in part, for any other project without giving written notice to Harutunian Engineering, Inc.

DESIGNED BY:	MWM
CHECKED BY:	MWM
APPROVED BY:	MWM
SUBMITTAL DATE:	OCTOBER 2019
SCALE:	

SOUTH AUSTIN REGIONAL WASTEWATER TREATMENT PLANT
ELECTRICAL SUBSTATION NO. 1 REPLACEMENT PROJECT
CIP I.D.# 3333.032

ARCHITECTURAL FLOOR PLAN

PROJECT NO: 2014-300 | SHT. 579 OF 866 | DWG NO. SUB1-A-010

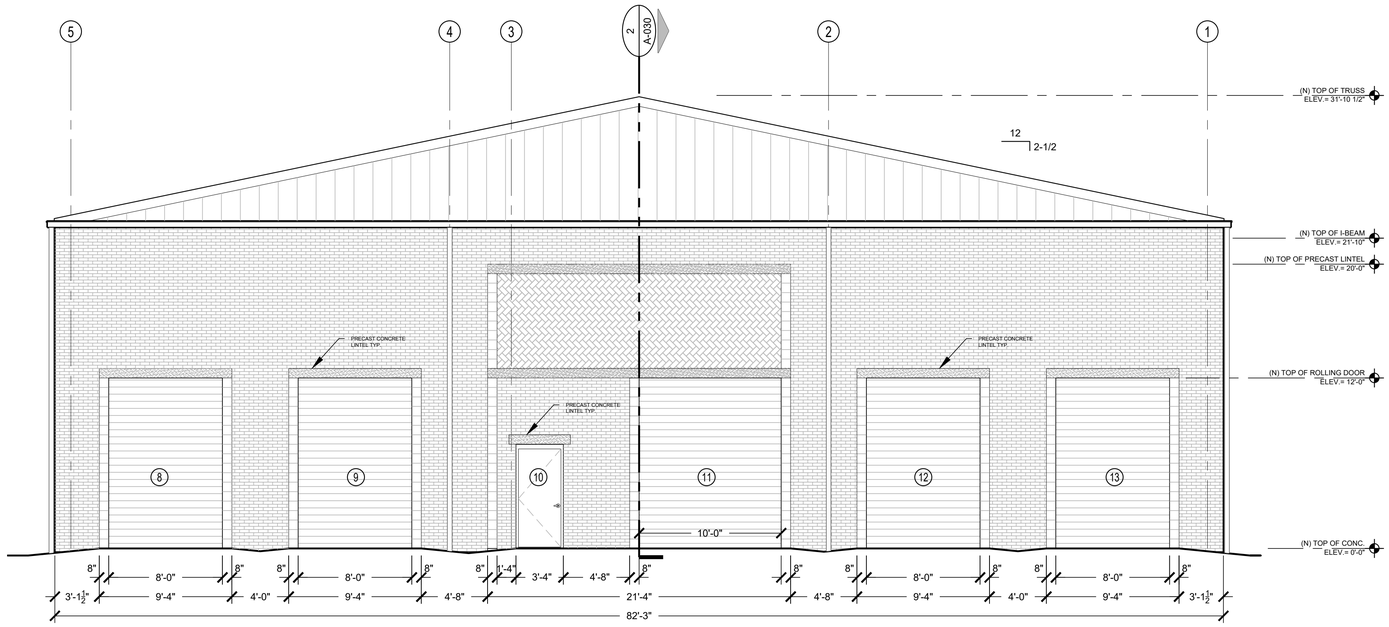

1 A-020 NORTH ELEVATION

3/16" = 1'-0"

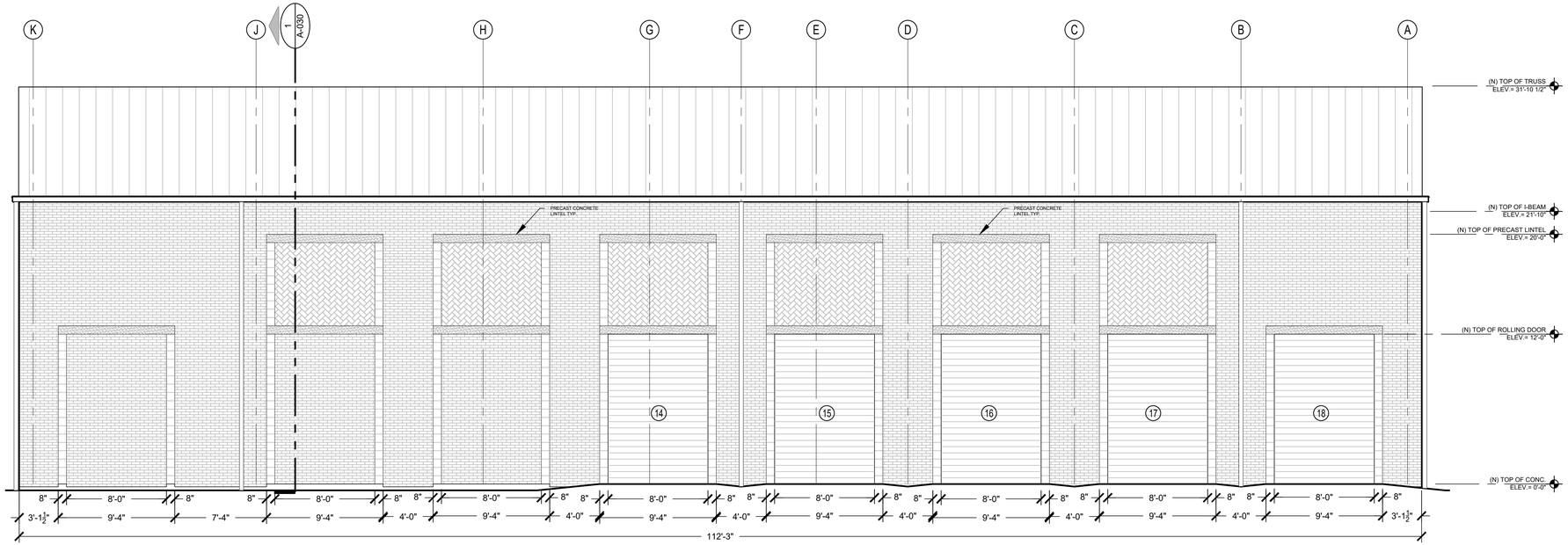

2 A-020 WEST ELEVATION

3/16" = 1'-0"

BAR LENGTH ON ORIGINAL DRAWING EQUALS ONE INCH. ADJUST SCALE ACCORDINGLY.

mwm DesignGroup
305 E. Huntland Drive
Suite 200
Austin, Texas 78752
p: 512.453.0767
f: 512.453.1734

REGISTERED ARCHITECT W. OWEN HARRISON 16346 STATE OF TEXAS

23 SEPTEMBER 2019

NO.	DATE:	DESCRIPTION

HARUTUNIAN ENGINEERING INCORPORATED
TEXAS FIRM REGISTRATION NUMBER F-2408
ENGINEERING AND ENVIRONMENTAL CONSULTANTS
8100 CROSS PARK DRIVE
AUSTIN, TEXAS 78754

REUSE OF DOCUMENTS
This document, and the designs incorporated herein, is an instrument of professional service that has been developed, designed and prepared by Harutunian Engineering, Inc., and is not to be used, in whole or in part, for any other project without giving written notice to Harutunian Engineering, Inc.

DESIGNED BY:	MWM
CHECKED BY:	MWM
APPROVED BY:	MWM
SUBMITTAL DATE:	OCTOBER 2019
SCALE:	

SOUTH AUSTIN REGIONAL WASTEWATER TREATMENT PLANT
ELECTRICAL SUBSTATION NO. 1 REPLACEMENT PROJECT
CIP I.D.# 3333.032

ARCHITECTURAL ELEVATIONS

PROJECT NO: 2014-300 | SHT. 580 OF 866 | DWG NO. SUB1-A-020

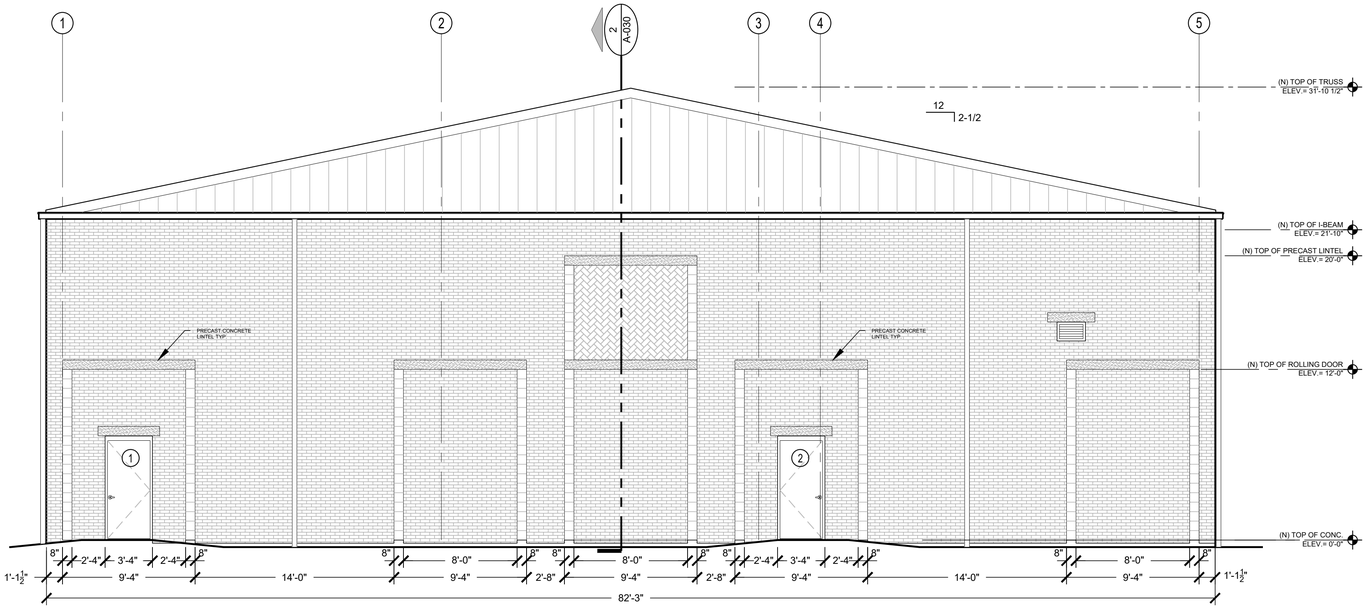

1 A-025 SOUTH ELEVATION

3/16" = 1'-0"

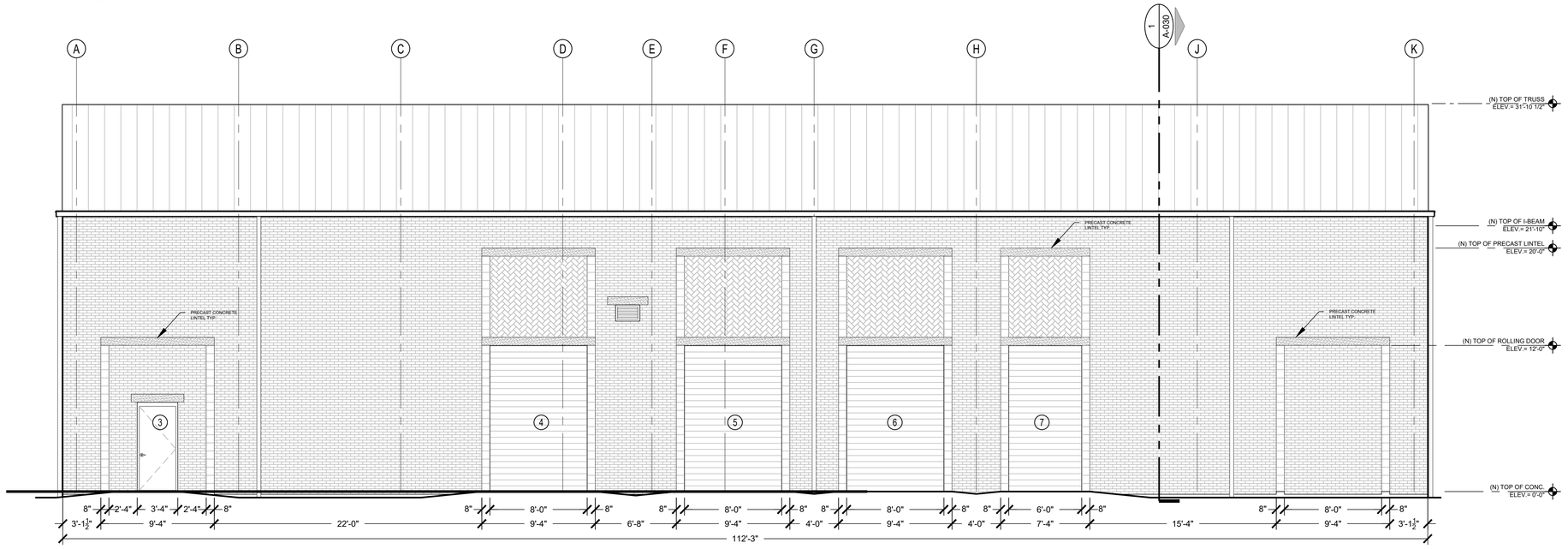

2 A-025 EAST ELEVATION

3/16" = 1'-0"

BAR LENGTH ON ORIGINAL DRAWING EQUALS ONE INCH, ADJUST SCALE ACCORDINGLY.

mwm DesignGroup
305 E. Huntland Drive
Suite 200
Austin, Texas 78752
p: 512.453.0767
f: 512.453.1734

REGISTERED ARCHITECT
KAREN HARNOD
16346
STATE OF TEXAS

23 SEPTEMBER 2019

NO.	DATE:	DESCRIPTION

HARUTUNIAN ENGINEERING INCORPORATED
TEXAS FIRM REGISTRATION NUMBER F-2408
ENGINEERING AND ENVIRONMENTAL CONSULTANTS
8100 CROSS PARK DRIVE
AUSTIN, TEXAS 78754

REUSE OF DOCUMENTS
This document, and the designs incorporated herein, is an instrument of professional service that has been developed, designed and prepared by Harutunian Engineering, Inc., and is not to be used, in whole or in part, for any other project without giving written notice to Harutunian Engineering, Inc.

DESIGNED BY: MWM
CHECKED BY: MWM
APPROVED BY: MWM
SUBMITTAL DATE: OCTOBER 2019
SCALE:

SOUTH AUSTIN REGIONAL WASTEWATER TREATMENT PLANT
ELECTRICAL SUBSTATION NO. 1 REPLACEMENT PROJECT
CIP I.D.# 3333.032

ARCHITECTURAL ELEVATIONS

PROJECT NO: 2014-300 | SHT. 581 OF 866 | DWG NO. SUB1-A-025

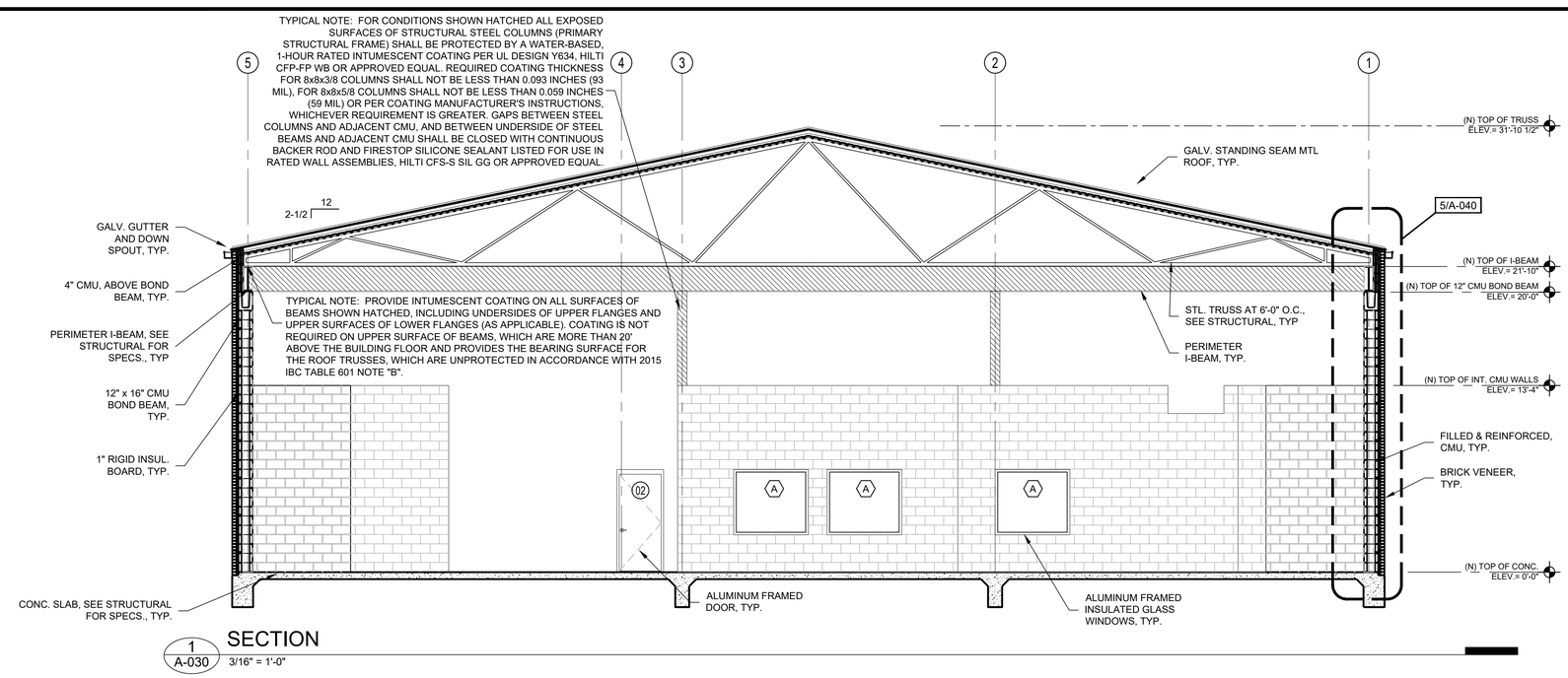

1 A-030 SECTION

3/16" = 1'-0"

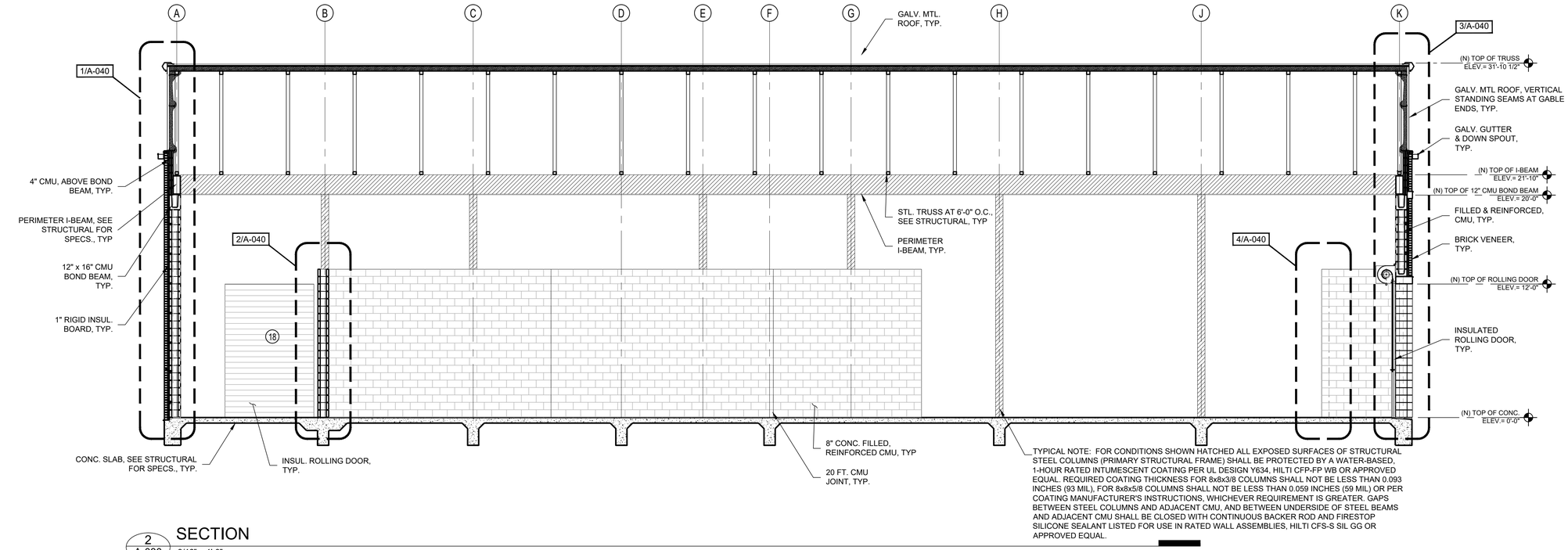

2 A-030 SECTION

3/16" = 1'-0"

BAR LENGTH ON ORIGINAL DRAWING EQUALS ONE INCH, ADJUST SCALE ACCORDINGLY.

mwm DesignGroup
305 E. Huntland Drive
Suite 200
Austin, Texas 78752
p: 512.453.0767
f: 512.453.1734

REGISTERED ARCHITECT KAREN HARNOY 18346 STATE OF TEXAS

23 SEPTEMBER 2019

NO.	DATE:	DESCRIPTION

HARUTUNIAN ENGINEERING INCORPORATED
TEXAS FIRM REGISTRATION NUMBER F-2408
ENGINEERING AND ENVIRONMENTAL CONSULTANTS
8100 CROSS PARK DRIVE
AUSTIN, TEXAS 78754

REUSE OF DOCUMENTS
This document, and the designs incorporated herein, is an instrument of professional service that has been developed, designed and prepared by Harutunian Engineering, Inc., and is not to be used, in whole or in part, for any other project without giving written notice to Harutunian Engineering, Inc.

DESIGNED BY:	MWM
CHECKED BY:	MWM
APPROVED BY:	MWM
SUBMITTAL DATE:	OCTOBER 2019
SCALE:	

SOUTH AUSTIN REGIONAL WASTEWATER TREATMENT PLANT
ELECTRICAL SUBSTATION NO. 1 REPLACEMENT PROJECT
CIP I.D.# 3333.032

ARCHITECTURAL BUILDING SECTIONS

PROJECT NO: 2014-300 | SHT. 582 OF 866 | DWG NO. SUB1-A-030

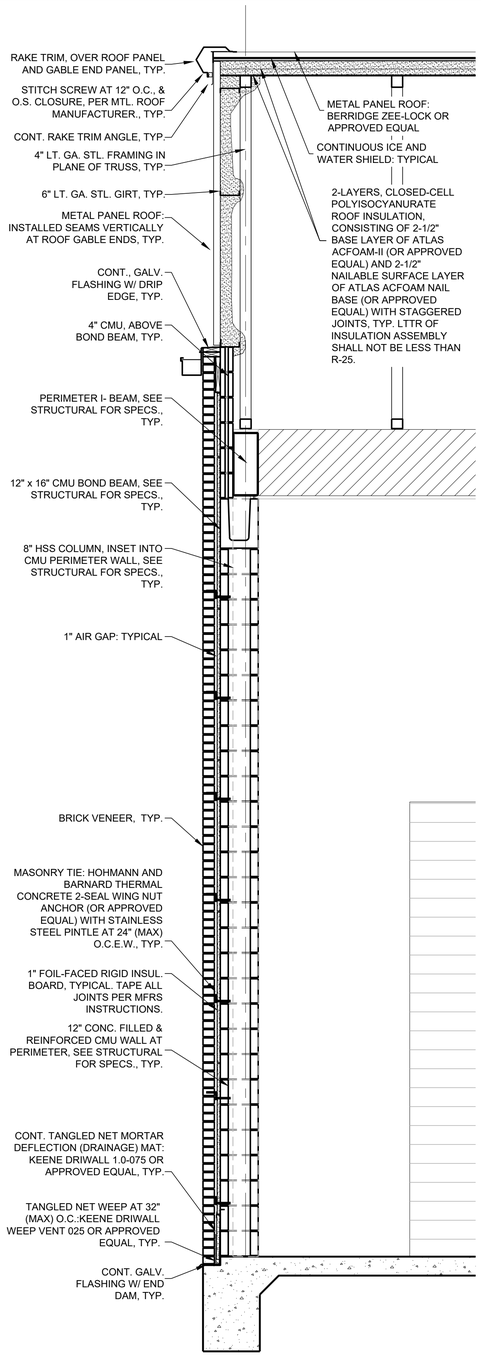

1 A-040 WALL SECTION 1/2" = 1'-0"

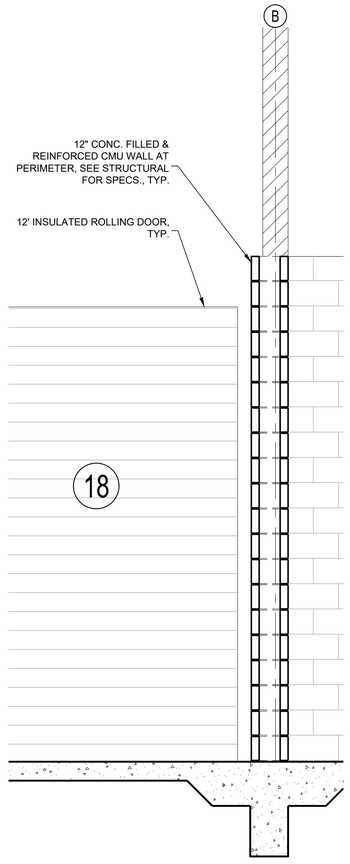

2 A-040 WALL SECTION 1/2" = 1'-0"

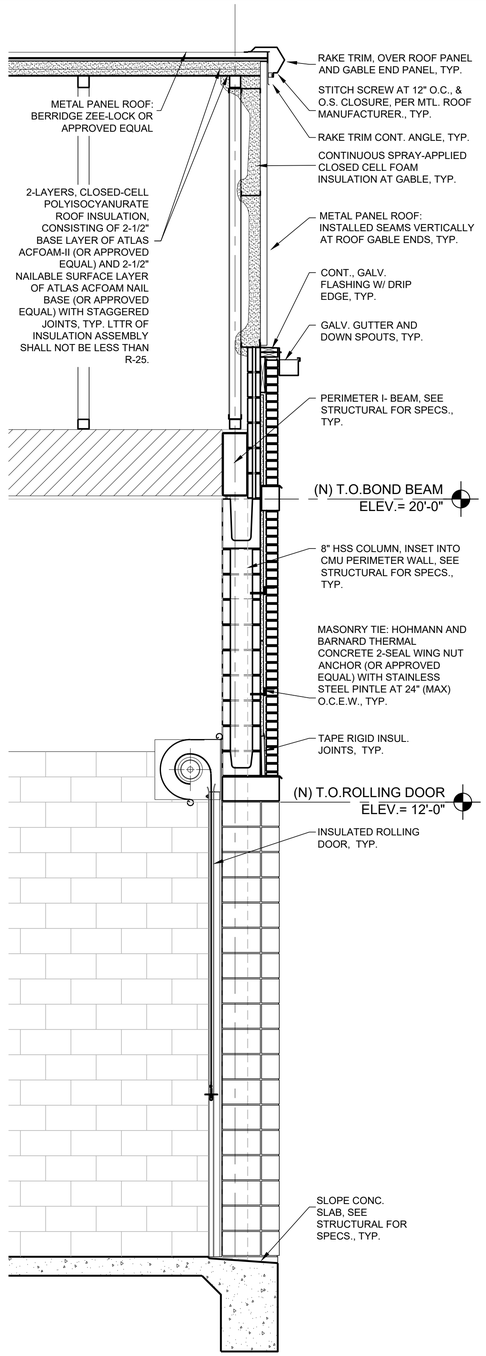

3 A-040 WALL SECTION 1/2" = 1'-0"

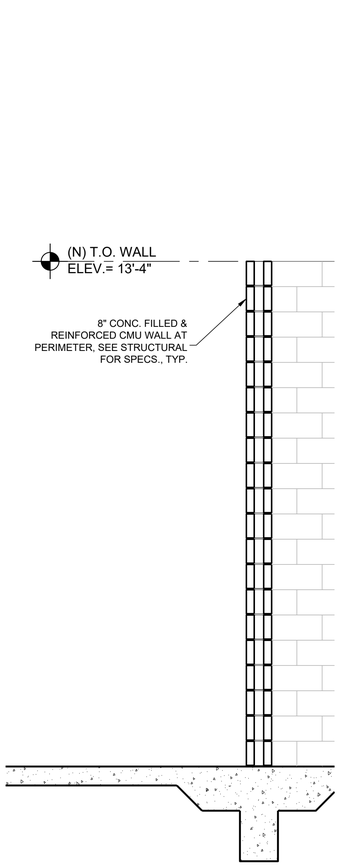

4 A-040 WALL SECTION 1/2" = 1'-0"

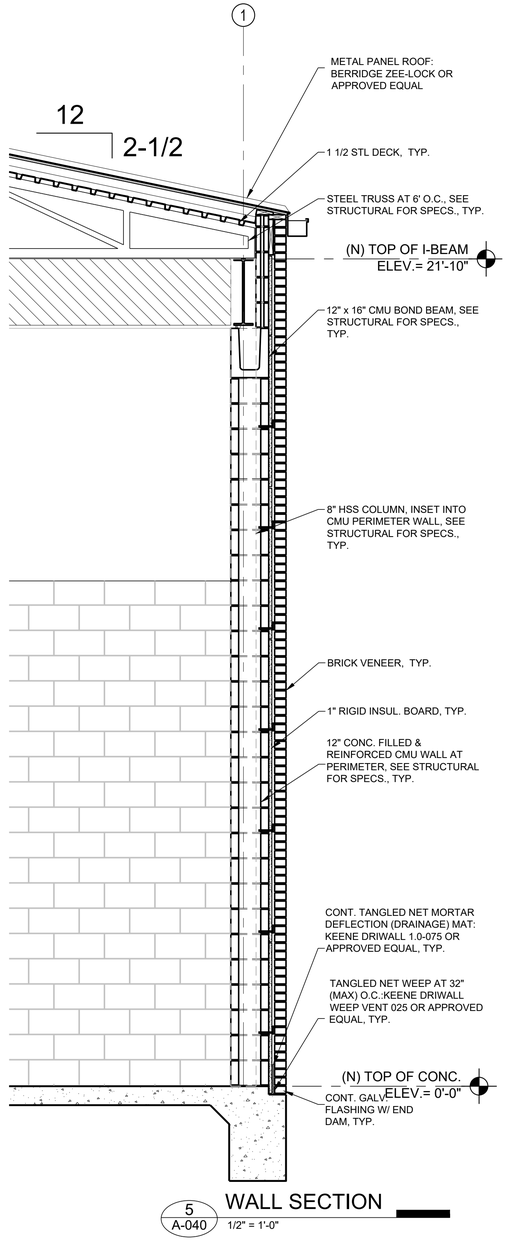

5 A-040 WALL SECTION 1/2" = 1'-0"

BAR LENGTH ON ORIGINAL DRAWING EQUALS ONE INCH. ADJUST SCALE ACCORDINGLY.

mwm DesignGroup
305 E. Huntland Drive
Suite 200
Austin, Texas 78752
p: 512.453.0767
f: 512.453.1734

REGISTERED ARCHITECT M. MOWEN HARGOT 16346 STATE OF TEXAS

23 SEPTEMBER 2019

NO.	DATE:	DESCRIPTION

HARUTUNIAN ENGINEERING INCORPORATED
TEXAS FIRM REGISTRATION NUMBER F-2408
ENGINEERING AND ENVIRONMENTAL CONSULTANTS
8100 CROSS PARK DRIVE
AUSTIN, TEXAS 78754

REUSE OF DOCUMENTS
This document, and the designs incorporated herein, is an instrument of professional service that has been developed, designed and prepared by Harutunian Engineering, Inc., and is not to be used, in whole or in part, for any other project without giving written notice to Harutunian Engineering, Inc.

DESIGNED BY:	MWM
CHECKED BY:	MWM
APPROVED BY:	MWM
SUBMITTAL DATE:	OCTOBER 2019
SCALE:	

SOUTH AUSTIN REGIONAL WASTEWATER TREATMENT PLANT
ELECTRICAL SUBSTATION NO. 1 REPLACEMENT PROJECT
CIP I.D.# 3333.032

ARCHITECTURAL WALL SECTIONS

PROJECT NO: 2014-300 | SHT. 583 OF 866 | DWG NO. SUB1-A-040

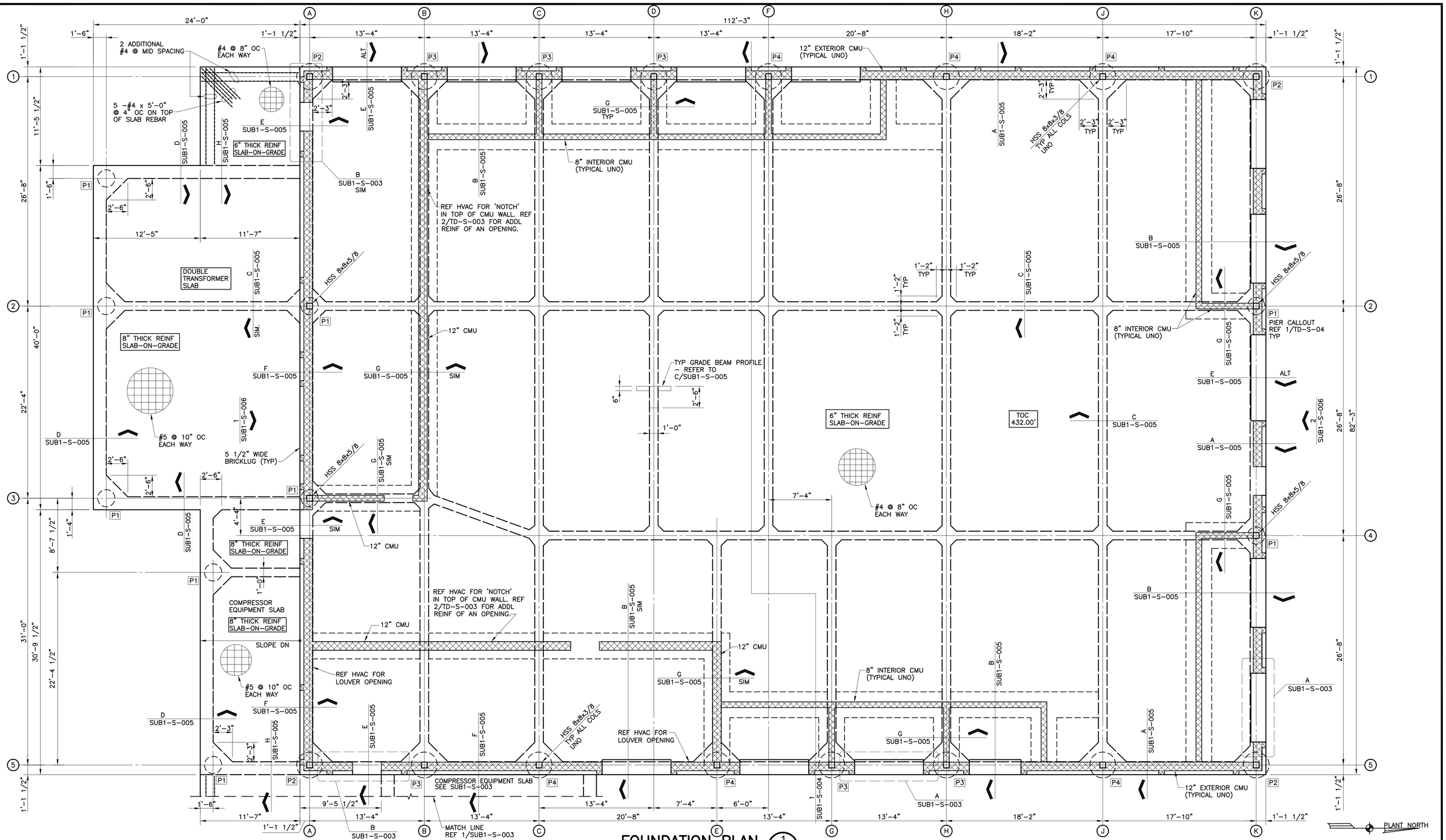

FOUNDATION PLAN 1

SCALE : 3/16" = 1'-0"

SUB1-S-001

CADFILE:F:\16051_SAR WWTP Elec Substation No 1\DRAWINGS\CAD\SUB1-S-001.dwg Plotted: Sep 26, 19 @ 10:30 am by: rhinojosa Scale: 1:64

BAR LENGTH ON ORIGINAL DRAWING EQUALS ONE INCH, ADJUST SCALE ACCORDINGLY.

Jose I. Guerra, Inc.
Consulting Engineers
2401 South IH-35 Suite 210
Austin, Texas 78741
(512) 445-2090
Structural ◆ Civil ◆ Mechanical ◆ Electrical
TBPE FIRM F-3

KENNETH W. HANKS 97528 LICENSED PROFESSIONAL ENGINEER 9/18/19

NO.	DATE:	DESCRIPTION

HARUTUNIAN ENGINEERING INCORPORATED
TEXAS FIRM REGISTRATION NUMBER F-2408
ENGINEERING AND ENVIRONMENTAL CONSULTANTS
8100 CROSS PARK DRIVE
AUSTIN, TEXAS 78754

REUSE OF DOCUMENTS

This document, and the designs incorporated herein, is an instrument of professional service that has been developed, designed and prepared by Harutunian Engineering, Inc., and is not to be used, in whole or in part, for any other project without giving written notice to Harutunian Engineering, Inc.

DESIGNED BY:	KH
CHECKED BY:	YC
APPROVED BY:	YC
SUBMITTAL DATE:	OCTOBER 2019
SCALE:	AS SHOWN

SOUTH AUSTIN REGIONAL WASTEWATER TREATMENT PLANT
ELECTRICAL SUBSTATION NO. 1 REPLACEMENT PROJECT
CIP I.D.# 3333.032

STRUCTURAL
FOUNDATION PLAN

PROJECT NO: 2014-300 | SHT. 584 OF 866 | DWG NO. SUB1-S-001

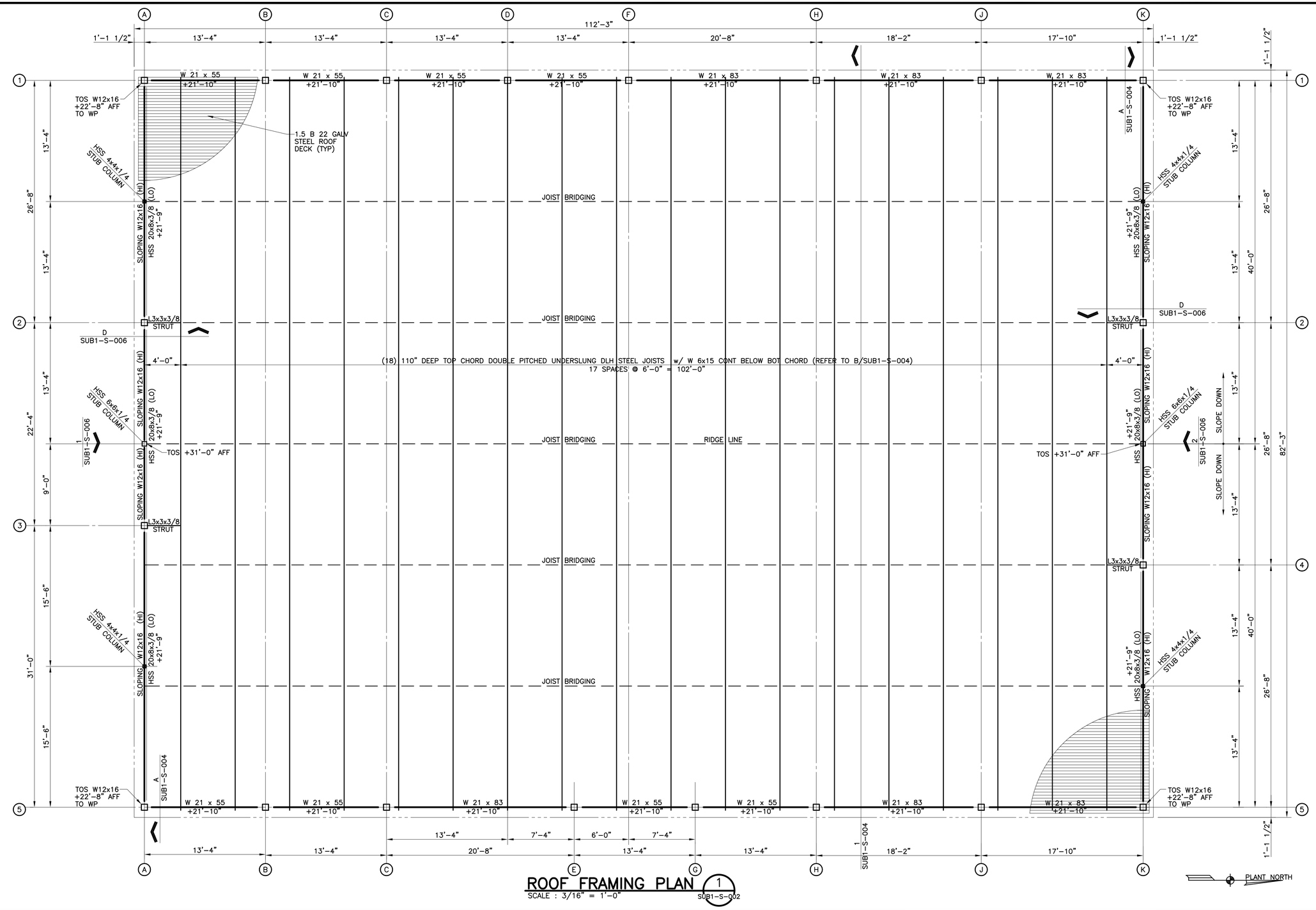

ROOF FRAMING PLAN (1 SUB1-S-002)

SCALE : 3/16" = 1'-0"

CADFILE:F:\16051_SAR WWTP Elec Substation No 1\DRAWINGS\CAD\SUB1-S-002.dwg Plotted: Sep 26, 19 @ 10:31 am by: rhinojosa Scale: 1:64

BAR LENGTH ON ORIGINAL DRAWING EQUALS ONE INCH, ADJUST SCALE ACCORDINGLY.

Jose I. Guerra, Inc.
Consulting Engineers
2401 South IH-35 Suite 210
Austin, Texas 78741
(512) 445-2090
Structural ◆ Civil ◆ Mechanical ◆ Electrical
TBPE FIRM F-3

STATE OF TEXAS
KENNETH W. HANKS
97528
LICENSED
PROFESSIONAL ENGINEER
4/18/19

NO.	DATE:	DESCRIPTION

HARUTUNIAN ENGINEERING INCORPORATED
TEXAS FIRM REGISTRATION NUMBER F-2408
ENGINEERING AND ENVIRONMENTAL CONSULTANTS
8100 CROSS PARK DRIVE
AUSTIN, TEXAS 78754

REUSE OF DOCUMENTS
This document, and the designs incorporated herein, is an instrument of professional service that has been developed, designed and prepared by Harutunian Engineering, Inc., and is not to be used, in whole or in part, for any other project without giving written notice to Harutunian Engineering, Inc.

DESIGNED BY:	KH
CHECKED BY:	YC
APPROVED BY:	YC
SUBMITTAL DATE:	OCTOBER 2019
SCALE:	AS SHOWN

SOUTH AUSTIN REGIONAL WASTEWATER TREATMENT PLANT
ELECTRICAL SUBSTATION NO. 1 REPLACEMENT PROJECT
CIP I.D.# 3333.032

STRUCTURAL ROOF PLAN

PROJECT NO: 2014-300 | SHT. 585 OF 866 | DWG NO. SUB1-S-002

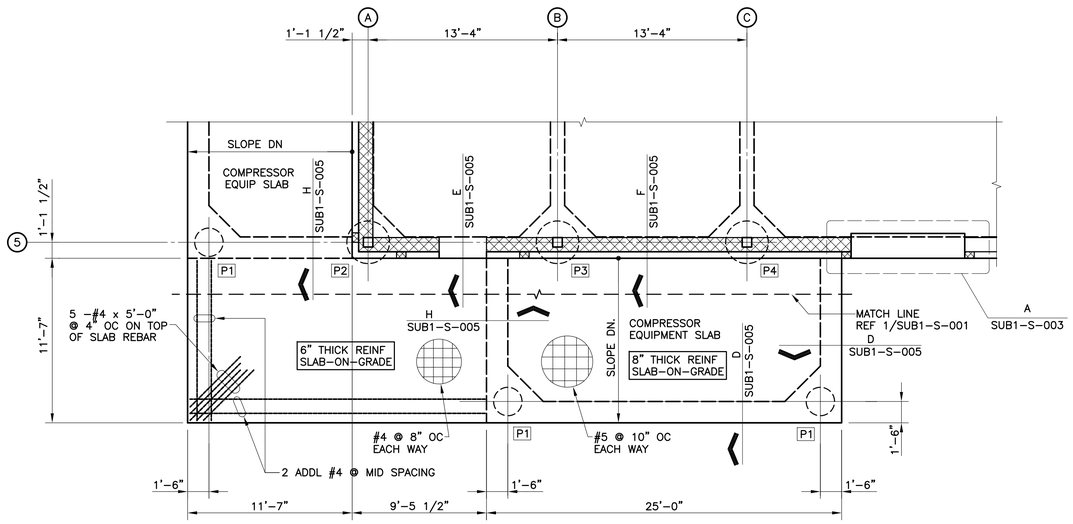

PARTIAL FOUNDATION PLAN AT COMPRESSOR SLAB

SCALE : 3/16" = 1'-0"

1 SUB1-S-001

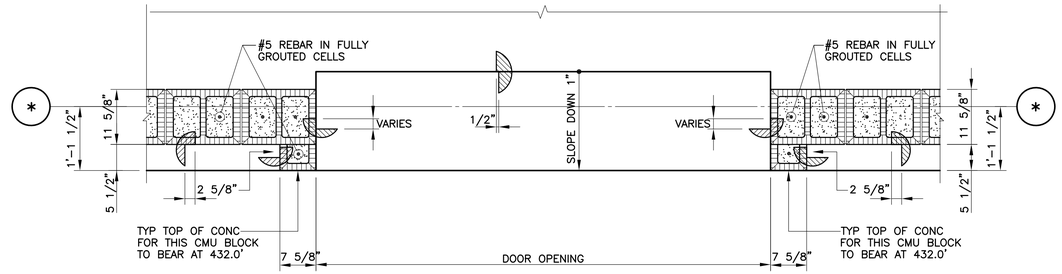

TYPICAL ENLARGED PLAN AT OVERHEAD DOOR

SCALE: 3/4"=1'-0"

A SUB1-S-001

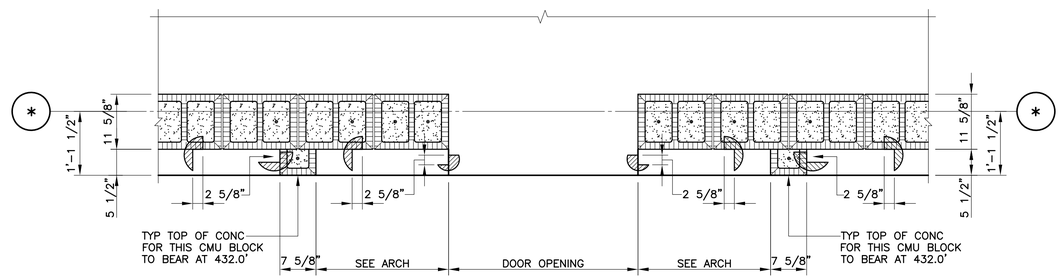

TYPICAL ENLARGED PLAN AT ENTRY DOOR

SCALE: 3/4"=1'-0"

B SUB1-S-001

CADFILE:F:\16051_SAR WWTP Elec Substation No 1\DRAWINGS\CAD\SUB1-S-003.dwg Plotted: Sep 26, 19 @ 10:33 am by: rhinojosa Scale: 1:48

BAR LENGTH ON ORIGINAL DRAWING EQUALS ONE INCH, ADJUST SCALE ACCORDINGLY.

Jose I. Guerra, Inc.
Consulting Engineers
2401 South IH-35 Suite 210
Austin, Texas 78741
(512) 445-2090
Structural ◆ Civil ◆ Mechanical ◆ Electrical
TBPE FIRM F-3

STATE OF TEXAS
KENNETH W. HANKS
97528
LICENSED
PROFESSIONAL ENGINEER
4/18/19

NO.	DATE:	DESCRIPTION

HARUTUNIAN ENGINEERING INCORPORATED
TEXAS FIRM REGISTRATION NUMBER F-2408
ENGINEERING AND ENVIRONMENTAL CONSULTANTS
8100 CROSS PARK DRIVE
AUSTIN, TEXAS 78754

REUSE OF DOCUMENTS
This document, and the designs incorporated herein, is an instrument of professional service that has been developed, designed and prepared by Harutunian Engineering, Inc., and is not to be used, in whole or in part, for any other project without giving written notice to Harutunian Engineering, Inc.

DESIGNED BY:	KH
CHECKED BY:	YC
APPROVED BY:	YC
SUBMITTAL DATE:	OCTOBER 2019
SCALE:	AS SHOWN

SOUTH AUSTIN REGIONAL WASTEWATER TREATMENT PLANT
ELECTRICAL SUBSTATION NO. 1 REPLACEMENT PROJECT
CIP I.D.# 3333.032

STRUCTURAL
PARTIAL FOUNDATION PLAN & DETAILS

PROJECT NO: 2014-300 | SHT. 586 OF 866 | DWG NO. SUB1-S-003

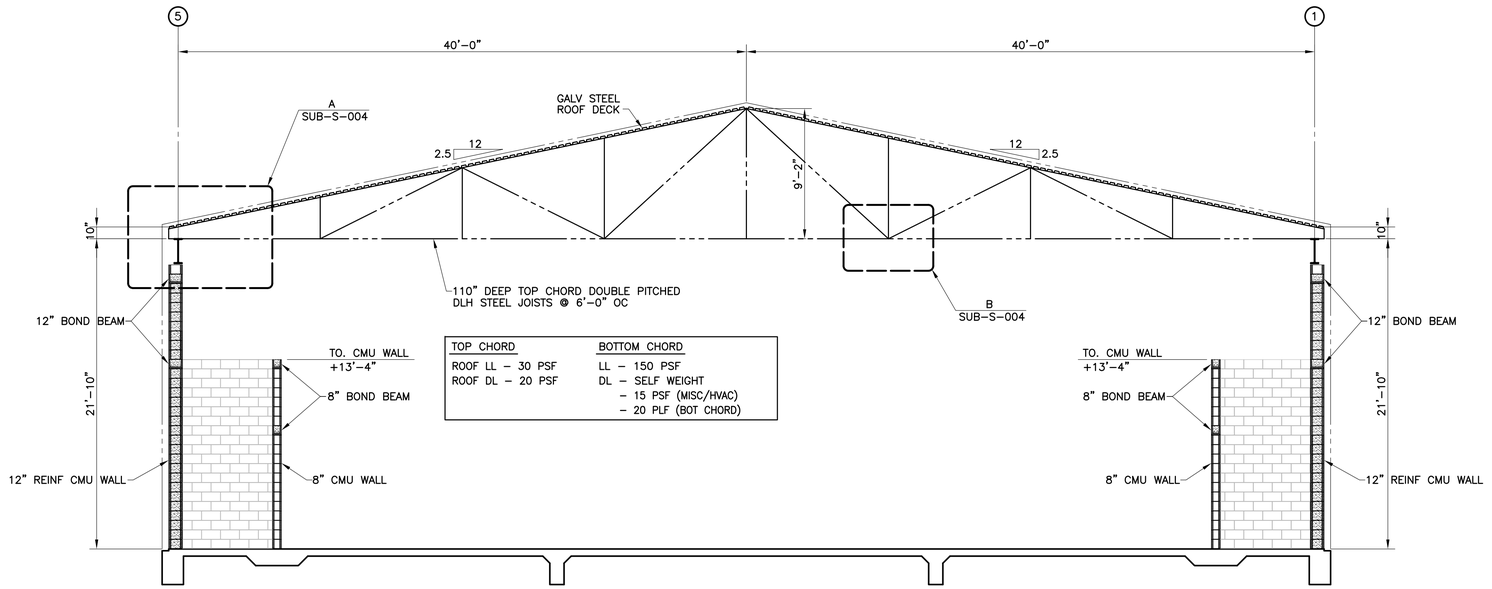

BUILDING SECTION LOOKING SOUTH 1

SCALE : 3/16" = 1'-0"

SUB-S-001

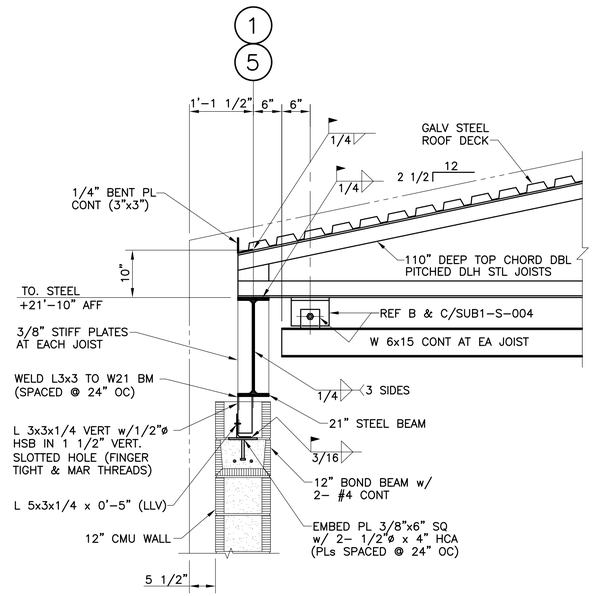

JOIST BEARING DETAIL A

SCALE: 3/4"=1'-0"

SUB1-S-004

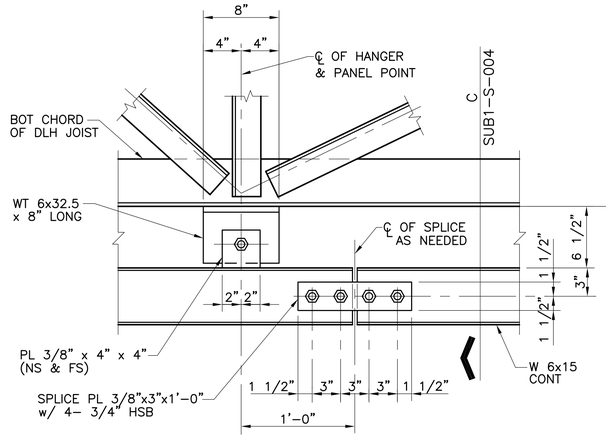

ENLARGED CONDUIT HANGER DETAIL AT ROOF B

SCALE: 1 1/2"=1'-0"

SUB1-S-004

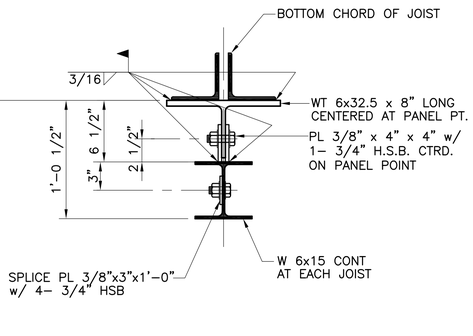

ENLARGED CONDUIT HANGER SECTION AT ROOF C

SCALE: 1 1/2"=1'-0"

SUB1-S-004

CADFILE:F:\16051_SAR WWTP Elec Substation No 1\DRAWINGS\CAD\SUB1-S-004.dwg Plotted: Sep 26, 19 @ 10:34 am by: rhinojosa Scale: 1:64

BAR LENGTH ON ORIGINAL DRAWING EQUALS ONE INCH, ADJUST SCALE ACCORDINGLY.

Jose I. Guerra, Inc.
Consulting Engineers
2401 South IH-35 Suite 210
Austin, Texas 78741
(512) 445-2090
Structural ◆ Civil ◆ Mechanical ◆ Electrical
TBPE FIRM F-3

STATE OF TEXAS
KENNETH W. HANKS
97528
LICENSED
PROFESSIONAL ENGINEER
4/18/19

NO.	DATE:	DESCRIPTION

HARUTUNIAN ENGINEERING INCORPORATED
TEXAS FIRM REGISTRATION NUMBER F-2408
ENGINEERING AND ENVIRONMENTAL CONSULTANTS
8100 CROSS PARK DRIVE
AUSTIN, TEXAS 78754

REUSE OF DOCUMENTS
This document, and the designs incorporated herein, is an instrument of professional service that has been developed, designed and prepared by Harutunian Engineering, Inc., and is not to be used, in whole or in part, for any other project without giving written notice to Harutunian Engineering, Inc.

DESIGNED BY: KH
CHECKED BY: YC
APPROVED BY: YC
SUBMITTAL DATE: OCTOBER 2019
SCALE: AS SHOWN

SOUTH AUSTIN REGIONAL WASTEWATER TREATMENT PLANT
ELECTRICAL SUBSTATION NO. 1 REPLACEMENT PROJECT
CIP I.D.# 3333.032

STRUCTURAL
BUILDING SECTION & ROOF DETAILS

PROJECT NO: 2014-300 | SHT. 587 OF 866 | DWG NO. SUB1-S-004

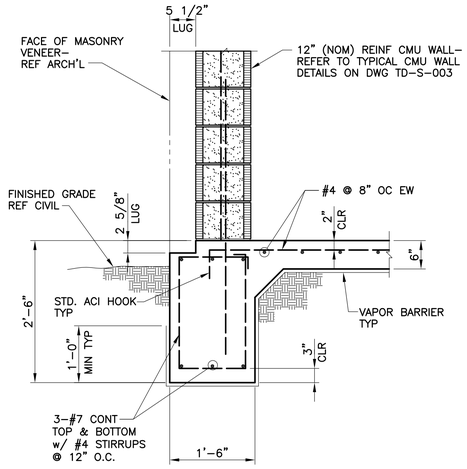

SECTION A
3/4" = 1'–0" SUB1–S–001

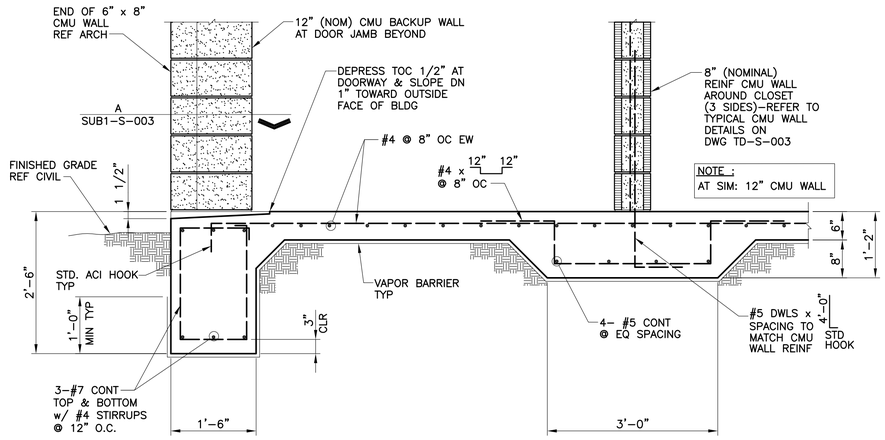

SECTION B
3/4" = 1'–0" SUB1–S–001

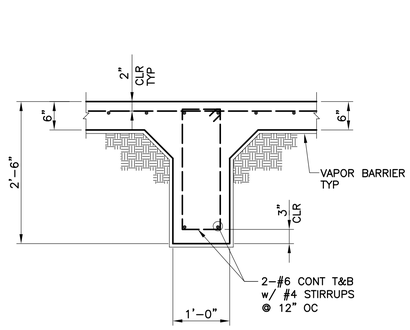

NOTE :
8" SLAB AT SIM.

SECTION C
3/4" = 1'–0" SUB1–S–001

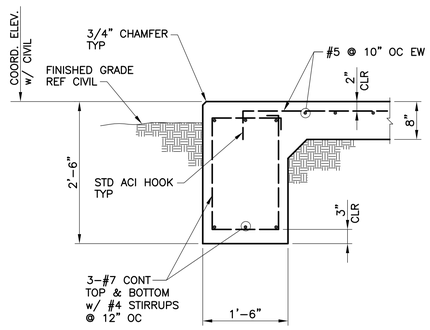

SECTION D
3/4" = 1'–0" SUB1–S–001

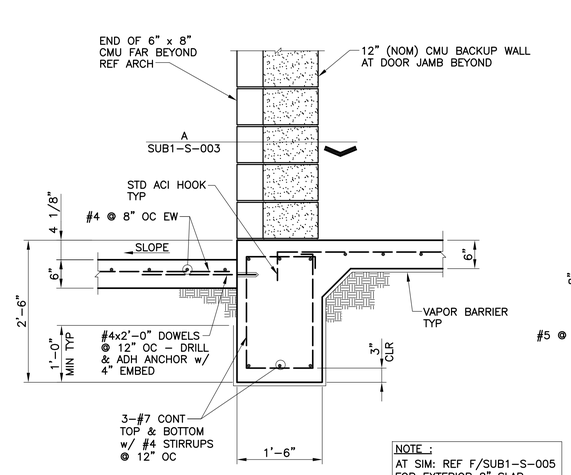

NOTE :
AT SIM: REF F/SUB1–S–005 FOR EXTERIOR 8" SLAB
AT ALT: NO EXTERIOR SLAB

SECTION E
3/4" = 1'–0" SUB1–S–001

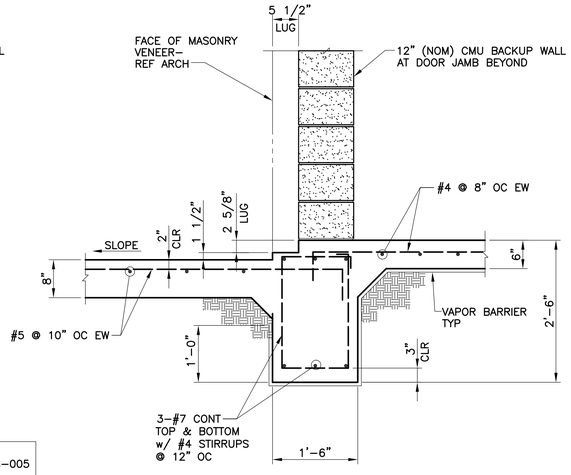

SECTION F
3/4" = 1'–0" SUB1–S–001

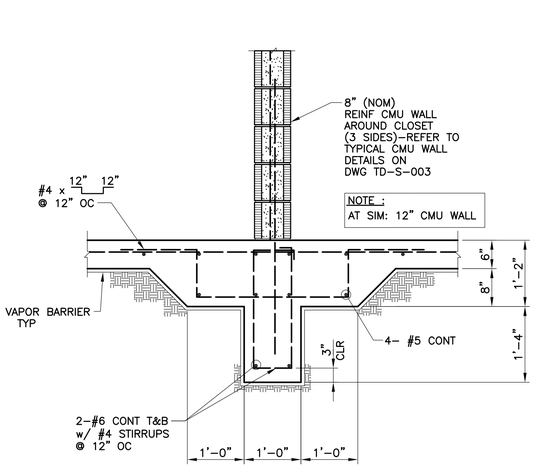

SECTION G
3/4" = 1'–0" SUB1–S–001

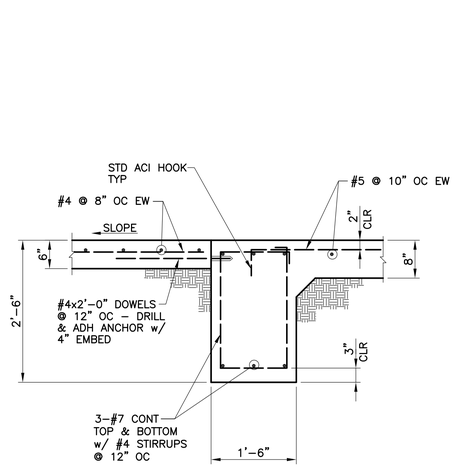

SECTION H
3/4" = 1'–0" SUB1–S–001

CADFILE:F:\16051_SAR WWTP Elec Substation No 1\DRAWINGS\CAD\SUB1–S–005.dwg Plotted: Sep 26, 19 @ 10:34 am by: rhinojosa Scale: 1:16

BAR LENGTH ON ORIGINAL DRAWING EQUALS ONE INCH, ADJUST SCALE ACCORDINGLY.

Jose I. Guerra, Inc.
Consulting Engineers
2401 South IH–35 Suite 210
Austin, Texas 78741
(512) 445–2090
Structural ◆ Civil ◆ Mechanical ◆ Electrical
TBPE FIRM F–3

STATE OF TEXAS
KENNETH W. HANKS
97528
LICENSED
PROFESSIONAL ENGINEER
4/18/19

NO.	DATE:	DESCRIPTION

HARUTUNIAN ENGINEERING INCORPORATED
TEXAS FIRM REGISTRATION NUMBER F–2408
ENGINEERING AND ENVIRONMENTAL CONSULTANTS
8100 CROSS PARK DRIVE
AUSTIN, TEXAS 78754

REUSE OF DOCUMENTS
This document, and the designs incorporated herein, is an instrument of professional service that has been developed, designed and prepared by Harutunian Engineering, Inc., and is not to be used, in whole or in part, for any other project without giving written notice to Harutunian Engineering, Inc.

DESIGNED BY: KH
CHECKED BY: YC
APPROVED BY: YC
SUBMITTAL DATE: OCTOBER 2019
SCALE: AS SHOWN

SOUTH AUSTIN REGIONAL WASTEWATER TREATMENT PLANT
ELECTRICAL SUBSTATION NO. 1 REPLACEMENT PROJECT
CIP I.D.# 3333.032

STRUCTURAL FOUNDATION SECTIONS

PROJECT NO: 2014–300 | SHT. 588 OF 866 | DWG NO. SUB1–S–005

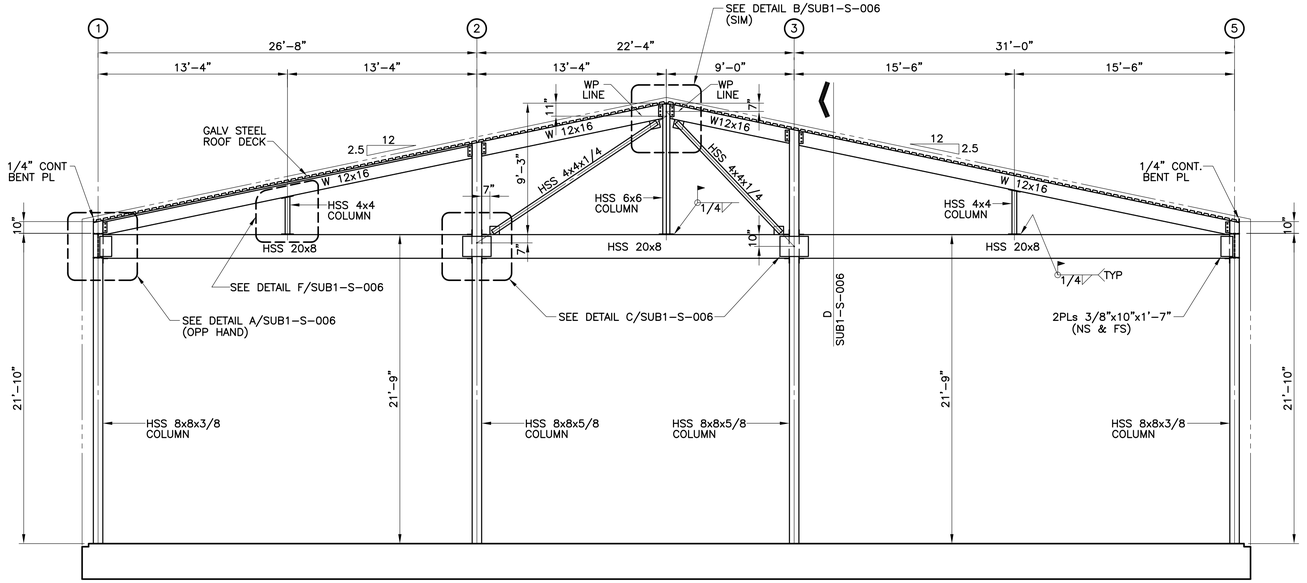

SOUTH FRAME ELEVATION LOOKING NORTH (1 SUB-S-001)

SCALE : 3/16" = 1'-0"

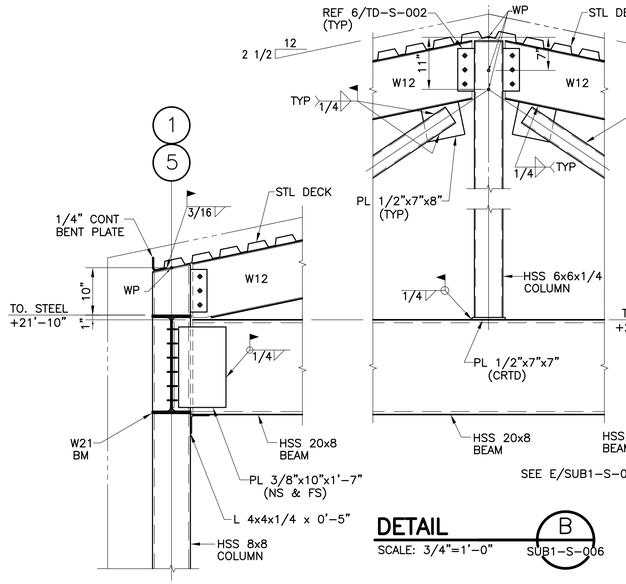

DETAIL A (SUB1-S-006)

SCALE: 3/4"=1'-0"

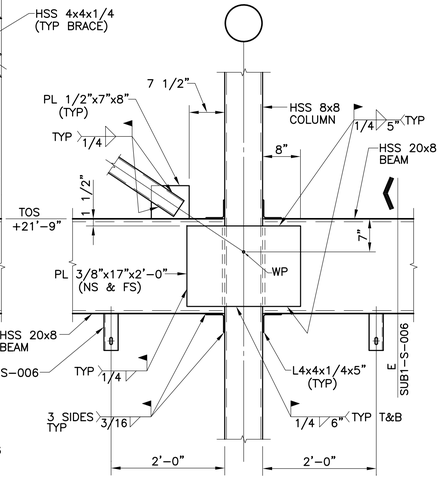

DETAIL B (SUB1-S-006)

SCALE: 3/4"=1'-0"

DETAIL C (SUB1-S-006)

SCALE: 3/4"=1'-0"

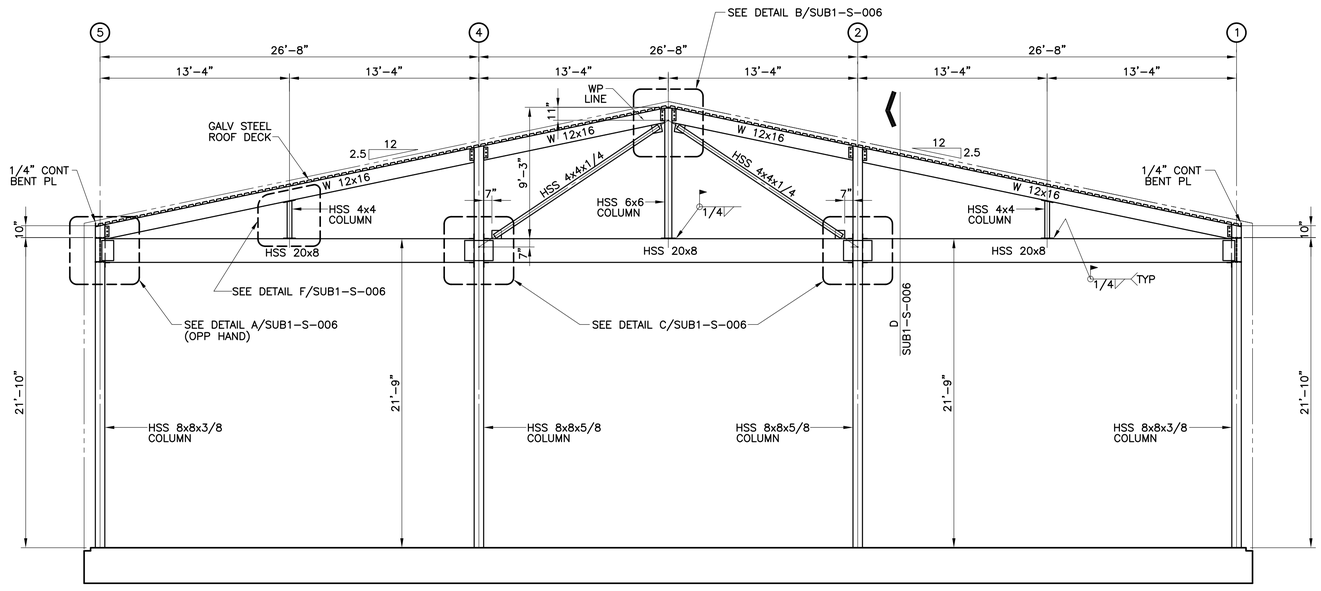

NORTH FRAME ELEVATION LOOKING SOUTH (2 SUB-S-001)

SCALE : 3/16" = 1'-0"

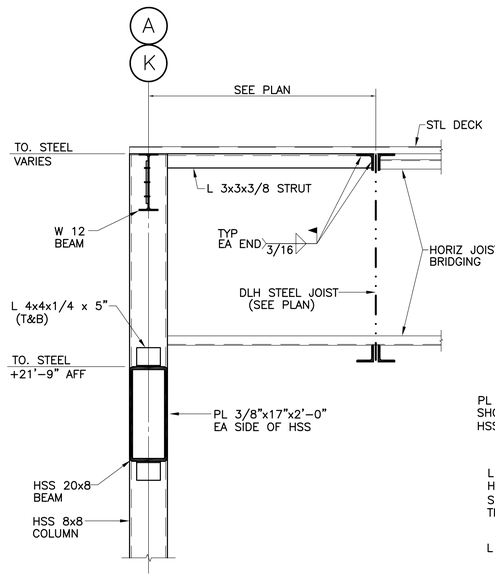

END WALL DETAIL (D SUB1-S-006)

SCALE: 3/4"=1'-0"

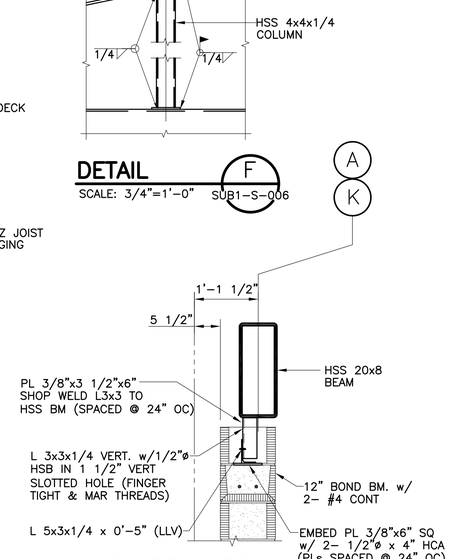

DETAIL F (SUB1-S-006)

SCALE: 3/4"=1'-0"

HSS BEAM TO CMU WALL DETAIL (E SUB1-S-006)

SCALE: 3/4"=1'-0"

CADFILE:F:\16051_SAR WWTP Elec Substation No 1\DRAWINGS\CAD\SUB1-S-006.dwg Plotted: Sep 26, 19 @ 10:35 am by: rhinojosa Scale: 1:64

BAR LENGTH ON ORIGINAL DRAWING EQUALS ONE INCH, ADJUST SCALE ACCORDINGLY.

Jose I. Guerra, Inc.
Consulting Engineers
2401 South IH-35 Suite 210
Austin, Texas 78741
(512) 445-2090
Structural ◆ Civil ◆ Mechanical ◆ Electrical
TBPE FIRM F-3

STATE OF TEXAS
KENNETH W. HANKS
97528
LICENSED
PROFESSIONAL ENGINEER
9/18/19

NO.	DATE:	DESCRIPTION

HARUTUNIAN ENGINEERING INCORPORATED
TEXAS FIRM REGISTRATION NUMBER F-2408
ENGINEERING AND ENVIRONMENTAL CONSULTANTS
8100 CROSS PARK DRIVE
AUSTIN, TEXAS 78754

REUSE OF DOCUMENTS
This document, and the designs incorporated herein, is an instrument of professional service that has been developed, designed and prepared by Harutunian Engineering, Inc., and is not to be used, in whole or in part, for any other project without giving written notice to Harutunian Engineering, Inc.

DESIGNED BY:	KH
CHECKED BY:	YC
APPROVED BY:	YC
SUBMITTAL DATE:	OCTOBER 2019
SCALE:	AS SHOWN

SOUTH AUSTIN REGIONAL WASTEWATER TREATMENT PLANT
ELECTRICAL SUBSTATION NO. 1 REPLACEMENT PROJECT
CIP I.D.# 3333.032

STRUCTURAL NORTH & SOUTH BUILDING ELEVATIONS & ROOF DETAILS

PROJECT NO: 2014-300 | SHT. 589 OF 866 | DWG NO. SUB1-S-006

FIXED BED ADSORPTION SCRUBBERS

DESIGNATION	PPU SCRUBBER	PPU SCRUBBER
TAGGING NUMBER	SUB1-F-001	SUB1-F-002
GENERAL		
MANUFACTURER	PURAFIL OR EQUAL	PURAFIL OR EQUAL
MODEL NO.	PPU-1000V	PPU-1000V
SCRUBBING FUNCTION(S)	RECIRC & PRESSURIZE	RECIRC & PRESSURIZE
UNIT AIRFLOW ORIENTATION	DOWNFLOW	DOWNFLOW
HOUSING MATERIAL OF CONSTRUCTION	316 SS	316 SS
OPERATION	PRIMARY	STAND-BY BACK-UP
STAGE 1 FILTER (PRE-FILTER)		
TYPE	PANEL FILTER	PANEL FILTER
MANUFACTURER	PURAFIL OR EQUAL	PURAFIL OR EQUAL
MODEL NO.	PP-30	PP-30
EFFICIENCY (ASHRAE)	30%	30%
QUANTITY	4	4
SIZE (INCHES)	12 X 24 X 4	12 X 24 X 4
VELOCITY (FEET/MINUTE)	250	250
INITIAL (CLEAN) PRESSURE DROP (IWG)	0.20	0.20
TERMINAL (SOILED) PRESSURE DROP (IWG)	0.70	0.70
STAGE 2 FILTER (ADSORPTION MEDIA)		
TYPE	DISPOSABLE MODULE	DISPOSABLE MODULE
MANUFACTURER	PURAFIL OR EQUAL	PURAFIL OR EQUAL
MODEL NO.	PK-12	PK-12
ADSORPTIVE MEDIA	PURACARB	PURACARB
QUANTITY	4	4
SIZE (INCHES)	12 X 24 X 12	12 X 24 X 12
VELOCITY (FEET/MINUTE)	250	250
DIFFERENTIAL PRESSURE (IWG)	1.35	1.35
STAGE 3 FILTER (ADSORPTION MEDIA)		
TYPE	DISPOSABLE MODULE	DISPOSABLE MODULE
MANUFACTURER	PURAFIL OR EQUAL	PURAFIL OR EQUAL
MODEL NO.	PK-12	PK-12
ADSORPTIVE MEDIA	CP BLEND SELECT	CP BLEND SELECT
QUANTITY	4	4
SIZE (INCHES)	12 X 24 X 12	12 X 24 X 12
VELOCITY (FEET/MINUTE)	250	250
DIFFERENTIAL PRESSURE (IWG)	1.35	1.35
STAGE 4 FILTER (FINAL-FILTER)		
TYPE	DEEP PLEAT FILTER	DEEP PLEAT FILTER
MANUFACTURER	PURAFIL OR EQUAL	PURAFIL OR EQUAL
MODEL NO.	JFL-90	JFL-90
EFFICIENCY (ASHRAE)	87%	87%
QUANTITY	2	2
SIZE (INCHES)	24 X 24 X 5	24 X 24 X 5
VELOCITY (FEET/MINUTE)	250	250
INITIAL (CLEAN) PRESSURE DROP (IWG)	0.30	0.30
TERMINAL (SOILED) PRESSURE DROP (IWG)	1.20	1.20
BLOWER DATA		
SUPPLY AIR FLOW (CFM)	2,000	2,000
OUTSIDE AIR FLOW (CFM)	1,000	1,000
FAN STATIC PRESSURE (IWG)	3.12	3.12
DRIVE	DIRECT	DIRECT
MATERIAL	POLYMIDE	POLYMIDE
SIZE (INCHES)	18	18
HORSEPOWER	5	5
RPM	1,800	1,800
ELECTRICAL DATA		
VOLTAGE	460	460
PHASE	3	3
HERTZ	60	60

AIR CONDITIONING UNITS

DESIGNATION	ACU	ACU
TAGGING NUMBER	SUB1-ACU-001	SUB1-ACU-002
GENERAL		
MANUFACTURER	LIEBERT OR EQUAL	LIEBERT OR EQUAL
MODEL NO.	DS VS105AU AIR COOLED	DS VS105AU AIR COOLED
CONFIGURATION	UP-FLOW	UP-FLOW
SCOP	1.81	1.81
OPERATION	PRIMARY	STAND-BY BACK-UP
UNIT COOLING CAPACITY		
AMBIENT TEMPERATURE (F)	105	105
SENSIBLE (MBH)	258.0	258.0
TOTAL (MBH)	318.7	318.7
BLOWER		
TOTAL AIR FLOW (CFM)	13,700	13,700
BLOWER QUANTITY	3	3
TYPE	VARIABLE SPEED EC	VARIABLE SPEED EC
TOTAL FAN POWER (kW)	7.07	7.07
EXTERNAL STATIC PRESSURE (IWG)	0.50	0.50
COMPRESSOR		
REFRIGERANT	R407C	R407C
TYPE	SEMI-HERMETIC	SEMI-HERMETIC
QUANTITY	2	2
COP	2.85	2.85
ELECTRICAL DATA		
VOLTAGE	460	460
PHASE	3	3
HERTZ	60	60
FULL LOAD AMPS	79.8	79.8
WIRE SIZING AMPS	97.4	97.4
MAXIMUM FUSE OR CIRCUIT BREAKER SIZE	110	110
EVAPORATOR COIL		
FACE AREA (SQ. FEET)	32.29	32.29
COIL TYPE	A-FRAME	A-FRAME
ROWS OF COIL	3	3
FIN TYPE	LANCED	LANCED
FINS PER INCH	12	12
SURFACE AREA (SQ. FEET)	2,365.27	2,365.27
ENTERING DRY BULB (F)	74.1	74.1
ENTERING WET BULB (F)	61.5	61.5
FULL CAPACITY LEAVING DRY BULB (F)	56.5	56.5
FULL CAPACITY LEAVING WET BULB (F)	53.2	53.2
REHEAT		
TOTAL UNIT CAPACITY (MBH)	102.4	102.4
NUMBER OF STAGES	3	3
FILTER		
TYPE	4" PLEATED	4" PLEATED
EFFICIENCY (MERV)	8	8
NOMINAL SIZE EACH FILTER	25 X 20	25 X 20
QUANTITY	8	8
PHYSICAL DATA		
DIMENSIONS (W X D X H) - INCHES	131 X 35 X 76	131 X 35 X 76
WEIGHT (LBS)	3,330	3,330

NOTE:

1. ONLY ONE SCHEDULED ACU MAY OPERATE AT ANY ONE TIME DUE TO THE REQUIRED SYSTEM LOAD, CONTROLS AND HVAC SUPPLY DUCTWORK CAPACITY. THE TOTAL CAPACITY OF THE HVAC SYSTEM SERVING THE BUILDING EQUALS THE CAPACITY OF ONLY ONE SCHEDULED UNIT. THE SECOND SCHEDULED UNIT SERVES AS A STAND-BY BACK-UP WHEN THE PRIMARY UNIT IS NOT OPERATING. REFER TO THE SPECIFICATIONS FOR SEQUENCE OF OPERATIONS AND CONTROL REQUIREMENTS.
2. EXTERNAL STATIC PRESSURE LISTED FOR ACU DOES NOT INCLUDE STATIC PRESSURE REQUIRED TO OVERCOME RETURN AIR FILTER, HEATING COIL, COOLING COIL, AND OTHER COMPONENT LOSSES WITHIN THE ACU BETWEEN THE RETURN AIR FILTER AND SUPPLY DUCT PENETRATIONS.

AIR DEVICE SCHEDULE

MARK	MANUFACTURER	MODEL	NOMINAL SIZE	FLOW RATE (CFM)	REMARKS
A / B	PRICE OR EQUAL	300FS	28 X 12 / 36 X 12	840 / 1100	ALUMINUM CONSTRUCTION. SURFACE MOUNT. ALUMINUM FINISH. WITH FACTORY SUPPLIED ALUMINUM OPPOSED BLADE DAMPER. ADJUST VERTICAL REGISTER BLADES TO YIELD UNIFORM FLOW RATE ALONG 90° PATTERN CENTERED NORMAL TO REGISTER AS SHOWN IN DRAWINGS.
C	PRICE OR EQUAL	301FS	24 X 16	2000	ALUMINUM CONSTRUCTION. SURFACE MOUNT. ALUMINUM FINISH. ADJUST BLADES TO THROW AIR AT 45° AWAY FROM ADJACENT WALL.

AIR COOLED CONDENSING UNITS

DESIGNATION	CU	CU
TAGGING NUMBER	SUB1-CU-001	SUB1-CU-002
GENERAL		
MANUFACTURER	LIEBERT OR EQUAL	LIEBERT OR EQUAL
MODEL NUMBER	MCM160X8	MCM160X8
CONDENSER TYPE	MICROCHANNEL	MICROCHANNEL
AIRFLOW (CFM)	23,139	23,139
CONTROL TYPE	PREMIUM	PREMIUM
COIL COATING	COATED	COATED
NUMBER OF FANS	4	4
WEIGHT (LBS)	880	880
OPERATION	PRIMARY	STAND-BY BACK-UP
ELECTRICAL DATA		
VOLTAGE	460	460
PHASE	3	3
HERTZ	60	60
FULL LOAD AMPS	5.6	5.6
WIRE SIZING AMPS	6.0	6.0
MAX OVERCURRENT PROTECTION	15	15

BAR LENGTH ON ORIGINAL DRAWING EQUALS ONE INCH, ADJUST SCALE ACCORDINGLY.

REUSE OF DOCUMENTS

This document, and the designs incorporated herein, is an instrument of professional service that has been developed, designed and prepared by Harutunian Engineering, Inc., and is not to be used, in whole or in part, for any other project without giving written notice to Harutunian Engineering, Inc.

NO.	DATE:	DESCRIPTION

HARUTUNIAN ENGINEERING INCORPORATED
TEXAS FIRM REGISTRATION NUMBER F-2408
ENGINEERING AND ENVIRONMENTAL CONSULTANTS
8100 CROSS PARK DRIVE
AUSTIN, TEXAS 78754

STATE OF TEXAS · VIGAIN HARUTUNIAN · 87736 · REGISTERED PROFESSIONAL ENGINEER · 10/7/2019

DESIGNED BY: HEI
CHECKED BY: HEI
APPROVED BY: HEI
SUBMITTAL DATE: OCTOBER 2019
SCALE: AS SHOWN

SOUTH AUSTIN REGIONAL WASTEWATER TREATMENT PLANT
ELECTRICAL SUBSTATION NO. 1 REPLACEMENT PROJECT
CIP I.D.# 3333.032

SUBSTATION NO. 1
HVAC EQUIPMENT SCHEDULES

PROJECT NO: 2014-300 | SHT. 590 OF 866 | DWG NO. SUB1-H-001

HVAC LEGEND

1 / 8 / M-33 / 2	1. INDICATES PLAN OR DETAIL NUMBER 2. INDICATES SHEET NUMBER WHERE PLAN OR DETAIL IS DRAWN
S/A	SUPPLY AIR
R/A	RETURN AIR
	90° ELBOW WITH TURNING VANES
	SUPPLY AIRFLOW (POSITIVE GAGE PRESSURE AIR)
	RETURN OR EXHAUST AIRFLOW (NEGATIVE GAGE PRESSURE AIR)
MARK: CFM	SUPPLY REGISTER. INDICATE MARK AND CFM.

AD, L X S	DUCT ACCESS DOOR, FRONT VIEW "L" INDICATES LONGER DIMENSION "S" INDICATES SHORTER DIMENSION
AD, X/Y	DUCT ACCESS DOOR, PLAN VIEW "X" INDICATES DIMENSION SHOWN "Y" INDICATES PERPINDICULAR DIMENSION
	SUPPLY DUCT SECTON
	RETURN DUCT SECTION
D	MANUAL BUTTERLY DAMPER WITH LOCKING HAND QUADRANT
	MANUAL OPPOSED BLADE DAMPER WITH LOCKING HAND QUADRANT
T	TRANSITION DUCT
	MANUAL ADJUSTABLE SPLITTER

MARK: CFM	SUPPLY REGISTER WITH VOLUME SPLITTER DAMPER/ADJUSTING ROD, ROD FASTENER, AND 45 DEGREE LO-LOSS TAP. INDICATE MARK AND CFM.
RD-X	REFRIGERANT DISCHARGE X INDICATES CIRCUIT NUMBER
RL-X	REFRIGERANT LIQUID X INDICATES CIRCUIT NUMBER
	FLEXIBLE CONNECTOR
CD	CONDENSATE DRAIN
CDO	OVERFLOW CONDENSATE DRAIN
BD	BACK DRAFT PARALLEL BLADE DAMPER

GENERAL NOTES:

1. ALL SUPPLY DUCT WORK FROM AIR CONDITIONING UNITS "SUB1-ACU-001" AND "SUB1-ACU-002" AND SCRUBBERS "SUB1-F-001" AND "SUB1-F-002 UNITS SHALL HAVE INTERNAL LINING. ALL FRESH AIR DUCT WORK TO SCRUBBER UNIT SHALL HAVE INTERNAL LINING. REFER TO SPECIFICATIONS FOR ADDITIONAL LINER REQUIREMENTS.
2. DUCT DIMENSIONS SHOWN INDICATE CLEAR UNOBSTRUCTED AIR PATH AND THUS DO NOT INCLUDE INSULATION THICKNESS.
3. INSULATION NOT SHOWN FOR CLARITY OF LINEWORK
4. ADJUSTABLE MANUAL SPLITTERS SHALL HAVE LOCKING HAND QUADRANTS LOCATED AT LOWER FACE OF DUCTWORK.
5. SUPPLY DUCT WORK DOWNSTREAM OF AIR CONDITIONING UNITS "SUB1-ACU-001" AND "SUB1-ACU-002", WITH EXCEPTION TO THE VERTICAL DUCT WORK AT THE DISCHARGE OF EACH AIR CONDITIONING UNIT AND THE DUCT WORK DOWNSTREAM OF "SUB1-ACU-001" AND "SUB1-ACU-002" UP TO THE POINT WHERE THE SUPPLY AIR DISCHARGE OF THESE TWO UNITS CONNECT, SHALL BE POSITIONED IN ELEVATION WITHIN THE VERTICAL ENVELOPE NOTED "HVAC DUCT WORK AND DIFFUSERS" IN THE CONDUIT/SYSTEMS LAYERING DETAIL ON DRAWING NO. [TD-E-003]. REFER TO THE ELEVATION DRAWINGS FOR ADDITIONAL REQUIREMENTS.
6. REFERENCE ARCHITECTURAL DOCUMENTS FOR INTAKE/FRESH AIR LOUVER REQUIREMENTS. COORDINATE INSTALLATION WITH BUILDING ELEMENTS.
7. REFER TO THE SPECIFICATIONS FOR ADDITIONAL REQUIREMENTS.
8. THE NEW SUBSTATION IS A SHELTER FOR ELECTRICAL EQUIPMENT AND IS NOT INTENDED FOR HUMAN OCCUPANCY. A MINIMUM FORCED MECHANICAL OUTSIDE AIR VENTILATION RATE IS NOT REQUIRED FOR OCCUPANCY PURPOSES. THE CALCULATED OPENABLE AREA OF THE DOOR OPENINGS TO THE OUTDOORS IS GREATER THAN 4 PERCENT OF THE FLOOR PLAN AREA. FILTERED FORCED MECHANICAL OUTSIDE AIR VENTILATION IS PROVIDED FOR GENERAL INDOOR AIR QUALITY CONTROL PURPOSES.

BAR LENGTH ON ORIGINAL DRAWING EQUALS ONE INCH, ADJUST SCALE ACCORDINGLY.

REUSE OF DOCUMENTS

This document, and the designs incorporated herein, is an instrument of professional service that has been developed, designed and prepared by Harutunian Engineering, Inc., and is not to be used, in whole or in part, for any other project without giving written notice to Harutunian Engineering, Inc.

NO.	DATE:	DESCRIPTION

HARUTUNIAN ENGINEERING INCORPORATED
TEXAS FIRM REGISTRATION NUMBER F-2408
ENGINEERING AND ENVIRONMENTAL CONSULTANTS
8100 CROSS PARK DRIVE
AUSTIN, TEXAS 78754

STATE OF TEXAS
VIGAIN HARUTUNIAN
87736
REGISTERED PROFESSIONAL ENGINEER
10/7/2019

DESIGNED BY:	HEI
CHECKED BY:	HEI
APPROVED BY:	HEI
SUBMITTAL DATE:	OCTOBER 2019
SCALE:	AS SHOWN

SOUTH AUSTIN REGIONAL WASTEWATER TREATMENT PLANT
ELECTRICAL SUBSTATION NO. 1 REPLACEMENT PROJECT
CIP I.D.# 3333.032

SUBSTATION NO. 1

HVAC LEGEND AND GENERAL NOTES

PROJECT NO: 2014-300 | SHT. 591 OF 866 | DWG NO. SUB1-H-002

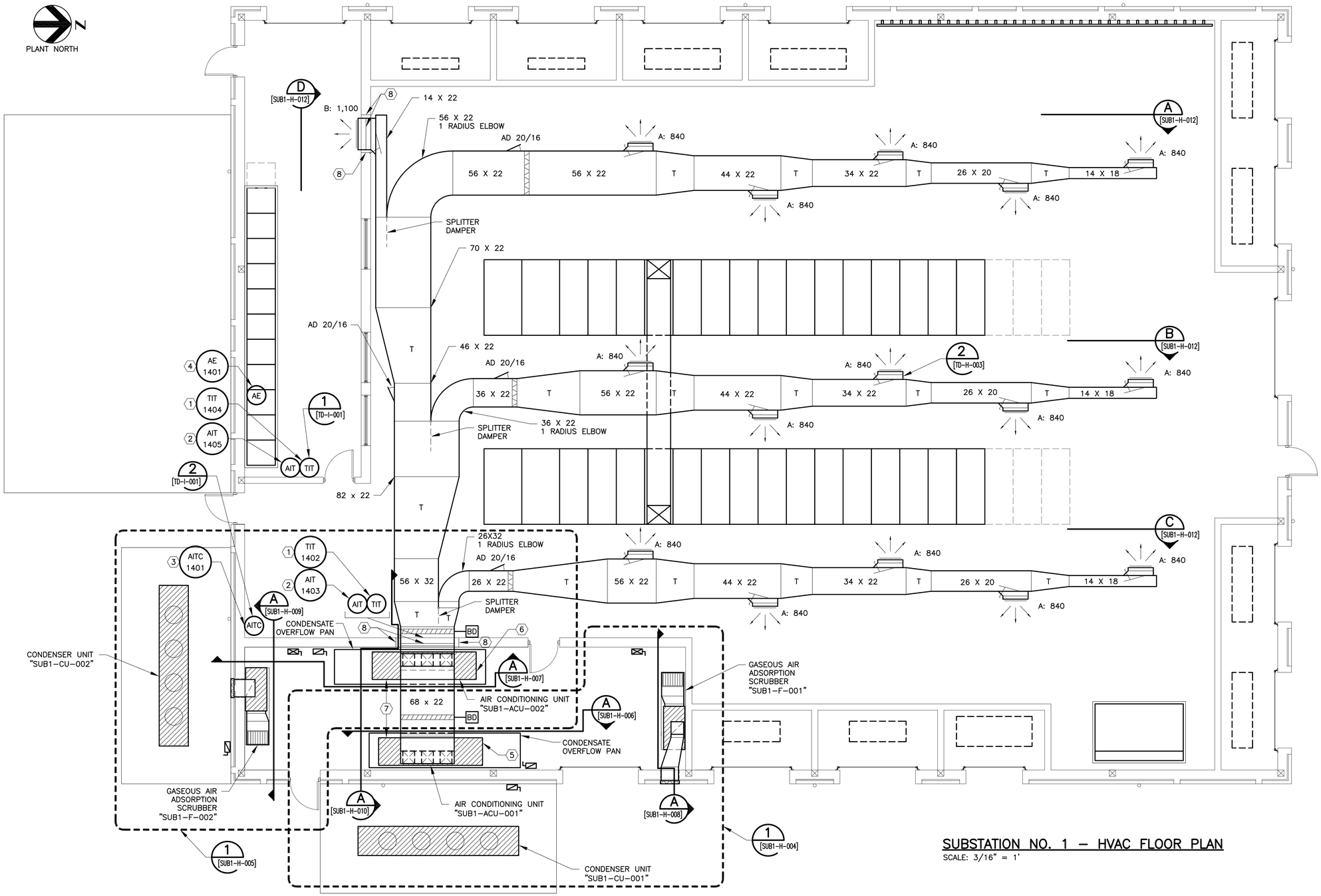

SUBSTATION NO. 1 – HVAC FLOOR PLAN

SCALE: 3/16" = 1'

KEY NOTES:

1. FURNISH AND INSTALL TEMPERATURE INDICATING TRANSMITTER. FASTEN WITH STAINLESS STEEL SCREWS. REFER TO ELECTRICAL/INSTRUMENTATION DRAWINGS.
2. FURNISH AND INSTALL HUMIDITY ANALYZER INDICATING TRANSMITTER. FASTEN WITH STAINLESS STEEL SCREWS. REFER TO ELECTRICAL/INSTRUMENTATION DRAWINGS.
3. FURNISH AND INSTALL HYDROGEN ANALYZER INDICATING TRANSMITTER. FASTEN WITH STAINLESS STEEL SCREWS. REFER TO ELECTRICAL/INSTRUMENTATION DRAWINGS.
4. FURNISH AND INSTALL HYDROGEN ANALYZER ELEMENT. INSTALL AS HIGH AS POSSIBLE NEAR ROOF DECK. REFER TO ELECTRICAL/INSTRUMENTATION DRAWINGS.
5. FIRE ALARM CONTROL PANEL SHALL BE HARDWIRED AND INTERLOCKED TO SHUTDOWN THE AIR CONDITIONING UNIT "SUB1–ACU–001" UPON DETECTION OF SMOKE. COORDINATE CONDUIT/CABLES WITH ELECTRICAL AND FIRE ALARM.
6. FIRE ALARM CONTROL PANEL SHALL BE HARDWIRED AND INTERLOCKED TO SHUTDOWN THE AIR CONDITIONING UNIT "SUB1–ACU–002" UPON DETECTION OF SMOKE. COORDINATE CONDUIT/CABLES WITH ELECTRICAL AND FIRE ALARM.
7. PROVIDE A DIRECT DIGITAL COMMUNICATION LINK BETWEEN THE TWO AIR CONDITIONING UNITS "SUB1–ACU–001" AND "SUB1–ACU–002". THE DIGITAL COMMUNICATION LINK SHALL CONSIST OF A CROSSOVER TYPE CATEGORY 6 MINIMUM ETHERNET CABLE ROUTED IN CONDUIT/RACEWAY. REFER TO THE SPECIFICATIONS FOR ADDITIONAL REQUIREMENTS. REFER TO THE ELECTRICAL DRAWINGS FOR CONDUIT/RACEWAY REQUIREMENTS.
8. PARTITION CMU WALL SHALL BE NOTCHED TO ALLOW DUCTWORK TO PASS THROUGH/OVER THE UPPER PART OF THIS PORTION OF THE WALL. THE PORTION OF THE WALL DIRECTLY BELOW THE DUCTWORK SHALL HAVE A TOP OF FINISHED WALL ELEVATION OF 11–FEET AND 4–INCHES ABOVE FINISHED FLOOR. THE REMAINING HEIGHT OF THE WALL SHALL BE 13–FEET AND 4–INCHES. ALLOW FOR 4–INCHES MINIMUM CLEARANCE ON EACH SIDE OF THE DUCTWORK BETWEEN THE DUCTWORK AND THE VERTICAL NOTCHED PORTION OF THE WALL WHERE THE WALL TRANSITIONS FROM THE LOWER 11–FEET AND 4–INCH HEIGHT TO THE HIGHER 13–FEET AND 4–INCH HEIGHT. REFER TO ARCHITECTURAL FOR ADDITIONAL REQUIREMENTS. CAREFULLY COORDINATE THE LOCATION OF THIS NOTCHED PORTION OF THE WALL WITH ALL TRADES PRIOR TO WALL CONSTRUCTION AND DUCTWORK FABRICATION.

BAR LENGTH ON ORIGINAL DRAWING EQUALS ONE INCH, ADJUST SCALE ACCORDINGLY.

REUSE OF DOCUMENTS

This document, and the designs incorporated herein, is an instrument of professional service that has been developed, designed and prepared by Harutunian Engineering, Inc., and is not to be used, in whole or in part, for any other project without giving written notice to Harutunian Engineering, Inc.

NO.	DATE:	DESCRIPTION

HARUTUNIAN ENGINEERING INCORPORATED
TEXAS FIRM REGISTRATION NUMBER F–2408
ENGINEERING AND ENVIRONMENTAL CONSULTANTS
8100 CROSS PARK DRIVE
AUSTIN, TEXAS 78754

STATE OF TEXAS · VIGAIN HARUTUNIAN · 87736 · REGISTERED PROFESSIONAL ENGINEER · 10/7/2019

DESIGNED BY:	HEI
CHECKED BY:	HEI
APPROVED BY:	HEI
SUBMITTAL DATE:	OCTOBER 2019
SCALE:	AS SHOWN

SOUTH AUSTIN REGIONAL WASTEWATER TREATMENT PLANT
ELECTRICAL SUBSTATION NO. 1 REPLACEMENT PROJECT
CIP I.D.# 3333.032

SUBSTATION NO. 1
HVAC FLOOR PLAN – PROPOSED

PROJECT NO: 2014–300 | SHT. 592 OF 866 | DWG NO. SUB1–H–003

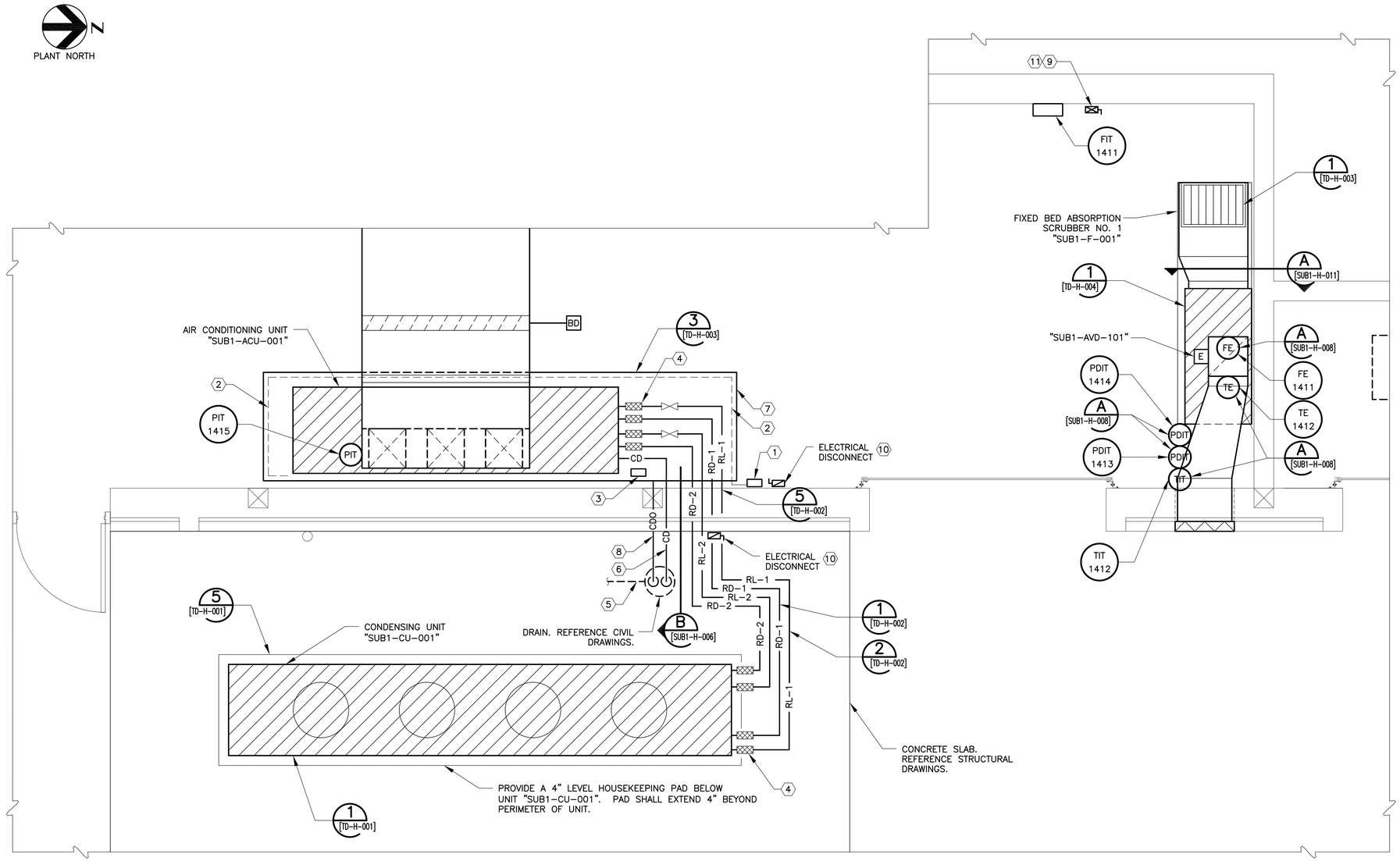

HVAC EQUIPMENT PLAN 1 [SUB1-H-003]

SCALE: 1/2"=1'-0"

KEY NOTES:

1. OVERFLOW PAN WATER DETECTION TRANSMITTER "WDT-1". MODULE SHALL BE A CABLE BASED DETECTION SYSTEM. PROVIDE POWER VIA "SUB1-ACU-001" AND TERMINATE CONTROL CABLE TO ACU TO INDICATE WATER DETECTION ALARM IN ACU CONTROL SYSTEM/PANEL. PROGRAM CONTROL PANEL AS REQUIRED TO DISTINGUISH ALARM. PROVIDE LIEBERT LIQUI-TECT 460 OR ENGINEER APPROVED EQUAL LEAK DETECTION MODULE. REFERENCE DETAIL THREE ON DRAWING NO. [TD-H-003] FOR INSTALLATION DETAIL.
2. LEAK DETECTION CABLE. PROVIDE FIFTEEN (15) FOOT LENGTH. TERMINATE TO "WDT-1". MOUNT TO BOTTOM CORNER OF PAN AROUND PERIMETER AS SHOWN. NEATLY FASTEN CABLE TO PAN WITH MANUFACTURER PROVIDED ADHESIVE BACKED FASTENERS. FASTEN AT EACH ONE (1) FOOT INTERVAL ALONG CABLE LENGTH AND AT CORNERS. PROVIDE LIEBERT LT500Y LEAK DETECTION CABLE OR ENGINEER APPROVED EQUAL.
3. OVERFLOW PAN WATER DETECTION TRANSMITTER "WDT-2". MODULE SHALL BE A PROBE BASED DETECTION SYSTEM. PROVIDE POWER VIA "SUB1-ACU-001" AND TERMINATE CONTROL TO ACU TO SHUTDOWN ACU UPON WATER DETECTION. POSITION PROBE TERMINAL AT 1/2" BELOW RIM OF OVERFLOW PAN. PROVIDE LIEBERT LIQUI-TECT 410 OR ENGINEER APPROVED EQUAL LEAK DETECTION MODULE. REFERENCE DETAIL THREE ON DRAWING NO. [TD-H-003] FOR INSTALLATION DETAIL.
4. REFRIGERANT PIPING FLEXIBLE CONNECTOR. PROVIDE ONE CONNECTOR AT EACH OF FOUR (4) REFRIGERANT PIPE UNIT CONNECTIONS AT EACH TERMINATION. EIGHT (8) TOTAL FLEXIBLE CONNECTORS.
5. CONDENSATE TERMINATION. REFERENCE STORM WATER DRAIN LINE IN CIVIL DRAWINGS.
6. PROVIDE 1-1/4" 316L SS PRIMARY CONDENSATE DRAIN. ROUTE TO DESIGNATED DRAIN OUTSIDE OF BUILDING. SLEEVE OUTSIDE WALL, TURN DOWN WITH ELBOW AND TERMINATE WITH 316 SS 1/8" SCREEN MESH. SUPPORT INDOOR PIPE AT ELBOWS WITH VERTICAL CHANNEL SUPPORT. CENTER TERMINATION ABOVE DRAIN. PROVIDE A 2" AIR GAP BETWEEN DRAIN TERMINATION AND DRAIN. REFERENCE DRAWING NO. [SUB1-H-006] FOR ELEVATION INSTALLATION DETAIL.
7. PROVIDE A 160" X 44" X 3" DEEP 316L SS OVERFLOW DRAIN PAN. PAN SHALL BE 14 GAGE THICKNESS MINIMUM. ALL SEAMS SHALL BE STAINLESS STEEL WELDED.
8. PROVIDE 1-1/4" 316L SS SECONDARY (OVERFLOW) CONDENSATE DRAIN. ROUTE TO EXTERIOR. SLEEVE OUTSIDE WALL, TURN DOWN WITH ELBOW AND TERMINATE AT ELBOW WITH 316 SS 1/8" SCREEN MESH. POSITION PAN PENETRATION AND DRAIN PIPE NEAR SOUTH WALL AS SHOWN. REFERENCE DRAWING NO. [SUB1-H-006] FOR ELEVATION INSTALLATION DETAIL.
9. ELECTRICAL DISCONNECT/STARTER. REFERENCE DRAWING NO. [SUB1-E-036] FOR LOCATION AND INSTALLATION.
10. ELECTRICAL DISCONNECT. REFERENCE DRAWING NO. [SUB1-E-036] FOR LOCATION AND INSTALLATION.
11. FIRE ALARM CONTROL PANEL SHALL BE HARDWIRED AND INTERLOCKED TO SHUTDOWN SCRUBBER NO. 1 "SUB1-F-001" UPON DETECTION OF SMOKE. COORDINATE CONDUIT/CABLES WITH ELECTRICAL AND FIRE ALARM.

BAR LENGTH ON ORIGINAL DRAWING EQUALS ONE INCH, ADJUST SCALE ACCORDINGLY.

REUSE OF DOCUMENTS

This document, and the designs incorporated herein, is an instrument of professional service that has been developed, designed and prepared by Harutunian Engineering, Inc., and is not to be used, in whole or in part, for any other project without giving written notice to Harutunian Engineering, Inc.

NO.	DATE:	DESCRIPTION

HARUTUNIAN ENGINEERING INCORPORATED

TEXAS FIRM REGISTRATION NUMBER F-2408

ENGINEERING AND ENVIRONMENTAL CONSULTANTS
8100 CROSS PARK DRIVE
AUSTIN, TEXAS 78754

STATE OF TEXAS — VIGAIN HARUTUNIAN 87736 — REGISTERED PROFESSIONAL ENGINEER — 10/7/2019

DESIGNED BY:	HEI
CHECKED BY:	HEI
APPROVED BY:	HEI
SUBMITTAL DATE:	OCTOBER 2019
SCALE:	AS SHOWN

SOUTH AUSTIN REGIONAL WASTEWATER TREATMENT PLANT
ELECTRICAL SUBSTATION NO. 1 REPLACEMENT PROJECT
CIP I.D.# 3333.032

SUBSTATION NO. 1 HVAC EQUIPMENT PLAN – PROPOSED

PROJECT NO: 2014-300 | SHT. 593 OF 866 | DWG NO. SUB1-H-004

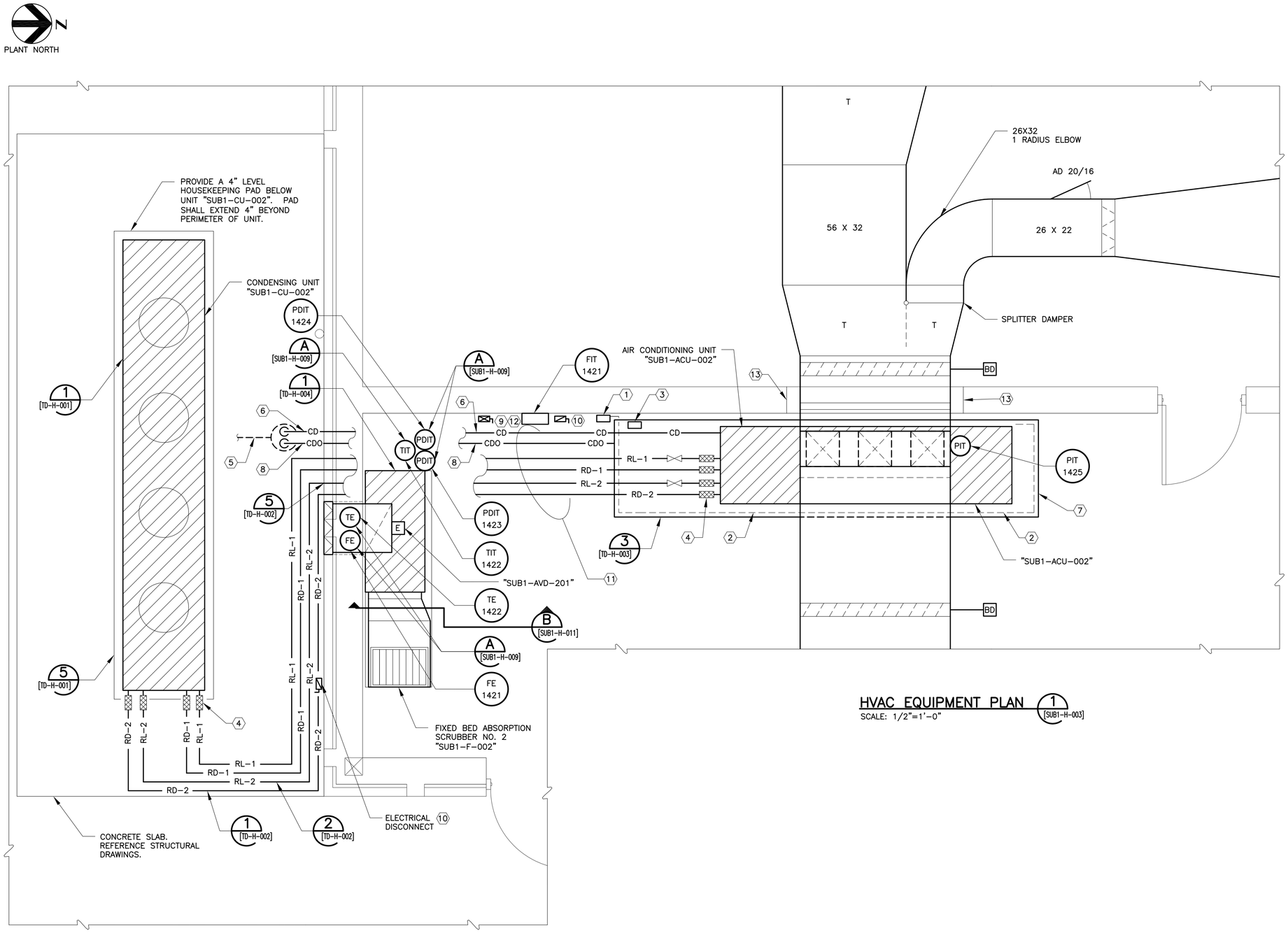

HVAC EQUIPMENT PLAN (1 [SUB1-H-003])

SCALE: 1/2"=1'-0"

KEY NOTES:

1. OVERFLOW PAN WATER DETECTION TRANSMITTER "WDT-1". MODULE SHALL BE A CABLE BASED DETECTION SYSTEM. PROVIDE POWER VIA "SUB1-ACU-002" AND TERMINATE CONTROL CABLE TO ACU TO INDICATE WATER DETECTION ALARM IN ACU CONTROL SYSTEM/PANEL. PROGRAM CONTROL PANEL AS REQUIRED TO DISTINGUISH ALARM. PROVIDE LIEBERT LIQUI-TECT 460 OR ENGINEER APPROVED EQUAL LEAK DETECTION MODULE. REFERENCE DETAIL THREE ON DRAWING NO. [TD-H-003] FOR INSTALLATION DETAIL.
2. LEAK DETECTION CABLE. PROVIDE FIFTEEN (15) FOOT LENGTH. TERMINATE TO "WDT-1". MOUNT TO BOTTOM CORNER OF PAN AROUND PERIMETER AS SHOWN. NEATLY FASTEN CABLE TO PAN WITH MANUFACTURER PROVIDED ADHESIVE BACKED FASTENERS. FASTEN AT EACH ONE (1) FOOT INTERVAL ALONG CABLE LENGTH AND AT CORNERS. PROVIDE LIEBERT LT500Y LEAK DETECTION CABLE OR ENGINEER APPROVED EQUAL.
3. OVERFLOW PAN WATER DETECTION TRANSMITTER "WDT-2". MODULE SHALL BE A PROBE BASED DETECTION SYSTEM. PROVIDE POWER VIA "SUB1-ACU-002" AND TERMINATE CONTROL TO ACU TO SHUTDOWN ACU UPON WATER DETECTION. POSITION PROBE TERMINAL AT 1/2" BELOW RIM OF OVERFLOW PAN. PROVIDE LIEBERT LIQUI-TECT 410 OR ENGINEER APPROVED EQUAL LEAK DETECTION MODULE. REFERENCE DETAIL THREE ON DRAWING NO. [TD-H-003] FOR INSTALLATION DETAIL.
4. REFRIGERANT PIPING FLEXIBLE CONNECTOR. PROVIDE ONE CONNECTOR AT EACH OF FOUR (4) REFRIGERANT PIPE UNIT CONNECTIONS AT EACH TERMINATION. EIGHT (8) TOTAL FLEXIBLE CONNECTORS.
5. CONDENSATE TERMINATION. REFERENCE STORM WATER DRAIN LINE IN CIVIL DRAWINGS.
6. PROVIDE 1-1/4" 316L SS PRIMARY CONDENSATE DRAIN. ROUTE TO DESIGNATED DRAIN OUTSIDE OF BUILDING. SLEEVE OUTSIDE WALL, TURN DOWN WITH ELBOW AND TERMINATE WITH 316 SS 1/8" SCREEN MESH. SUPPORT INDOOR PIPE AT ELBOWS WITH VERTICAL CHANNEL SUPPORT. CENTER TERMINATION ABOVE DRAIN. PROVIDE A 2" AIR GAP BETWEEN DRAIN TERMINATION AND DRAIN. REFERENCE DRAWING NO. [SUB1-H-007] FOR ELEVATION INSTALLATION DETAIL.
7. PROVIDE A 160" X 44" X 3" DEEP 316L SS OVERFLOW DRAIN PAN. PAN SHALL BE 14 GAGE THICKNESS MINIMUM. ALL SEAMS SHALL BE STAINLESS STEEL WELDED.
8. PROVIDE 1-1/4" 316L SS SECONDARY (OVERFLOW) CONDENSATE DRAIN. ROUTE TO EXTERIOR. SLEEVE OUTSIDE WALL, TURN DOWN WITH ELBOW AND TERMINATE AT ELBOW WITH 316 SS 1/8" SCREEN MESH. POSITION PAN PENETRATION AND DRAIN PIPE NEAR SOUTH WALL AS SHOWN. REFERENCE DRAWING NO. [SUB1-H-007] FOR ELEVATION INSTALLATION DETAIL.
9. ELECTRICAL DISCONNECT/STARTER. REFERENCE DRAWING NO. [SUB1-E-043] FOR LOCATION AND INSTALLATION.
10. ELECTRICAL DISCONNECT. REFERENCE DRAWING NO. [SUB1-E-043] FOR LOCATION AND INSTALLATION.
11. LOCATION OF REFRIGERATE AND CONDENSATE PIPING IS SCHEMATIC. INSTALL PIPING AS CLOSE AS POSSIBLE TO THE WALL IMMEDIATELY WEST OF THE PIPING. ALL PIPING SHALL BE LOCATED WEST OF THE PDIT AND TIT INSTRUMENT VERTICAL SUPPORT CHANNEL SERVING "SUB1-F-002".
12. FIRE ALARM CONTROL PANEL SHALL BE HARDWIRED AND INTERLOCKED TO SHUTDOWN SCRUBBER NO. 2 "SUB1-F-002" UPON DETECTION OF SMOKE. COORDINATE CONDUIT/CABLES WITH ELECTRICAL AND FIRE ALARM.
13. PARTITION CMU WALL SHALL BE NOTCHED TO ALLOW DUCTWORK TO PASS THROUGH/OVER THE UPPER PART OF THIS PORTION OF THE WALL. THE PORTION OF THE WALL DIRECTLY BELOW THE DUCTWORK SHALL HAVE A TOP OF FINISHED WALL ELEVATION OF 11-FEET AND 4-INCHES ABOVE FINISHED FLOOR. THE REMAINING HEIGHT OF THE WALL SHALL BE 13-FEET AND 4-INCHES. ALLOW FOR 4-INCHES MINIMUM CLEARANCE ON EACH SIDE OF THE DUCTWORK BETWEEN THE DUCTWORK AND THE VERTICAL NOTCHED PORTION OF THE WALL WHERE THE WALL TRANSITIONS FROM THE LOWER 11-FEET AND 4-INCH HEIGHT TO THE HIGHER 13-FEET AND 4-INCH HEIGHT. REFER TO ARCHITECTURAL FOR ADDITIONAL REQUIREMENTS. CAREFULLY COORDINATE THE LOCATION OF THIS NOTCHED PORTION OF THE WALL WITH ALL TRADES PRIOR TO WALL CONSTRUCTION AND DUCTWORK FABRICATION.

BAR LENGTH ON ORIGINAL DRAWING EQUALS ONE INCH, ADJUST SCALE ACCORDINGLY.

REUSE OF DOCUMENTS

This document, and the designs incorporated herein, is an instrument of professional service that has been developed, designed and prepared by Harutunian Engineering, Inc., and is not to be used, in whole or in part, for any other project without giving written notice to Harutunian Engineering, Inc.

NO.	DATE:	DESCRIPTION

HARUTUNIAN ENGINEERING INCORPORATED

TEXAS FIRM REGISTRATION NUMBER F-2408

ENGINEERING AND ENVIRONMENTAL CONSULTANTS
8100 CROSS PARK DRIVE
AUSTIN, TEXAS 78754

STATE OF TEXAS · VIGAIN HARUTUNIAN · 87736 · REGISTERED PROFESSIONAL ENGINEER · 10/7/2019

DESIGNED BY:	HEI
CHECKED BY:	HEI
APPROVED BY:	HEI
SUBMITTAL DATE:	OCTOBER 2019
SCALE:	AS SHOWN

SOUTH AUSTIN REGIONAL WASTEWATER TREATMENT PLANT
ELECTRICAL SUBSTATION NO. 1 REPLACEMENT PROJECT
CIP I.D.# 3333.032

SUBSTATION NO. 1 HVAC EQUIPMENT PLAN – PROPOSED

PROJECT NO: 2014-300 | SHT. 594 OF 866 | DWG NO. SUB1-H-005

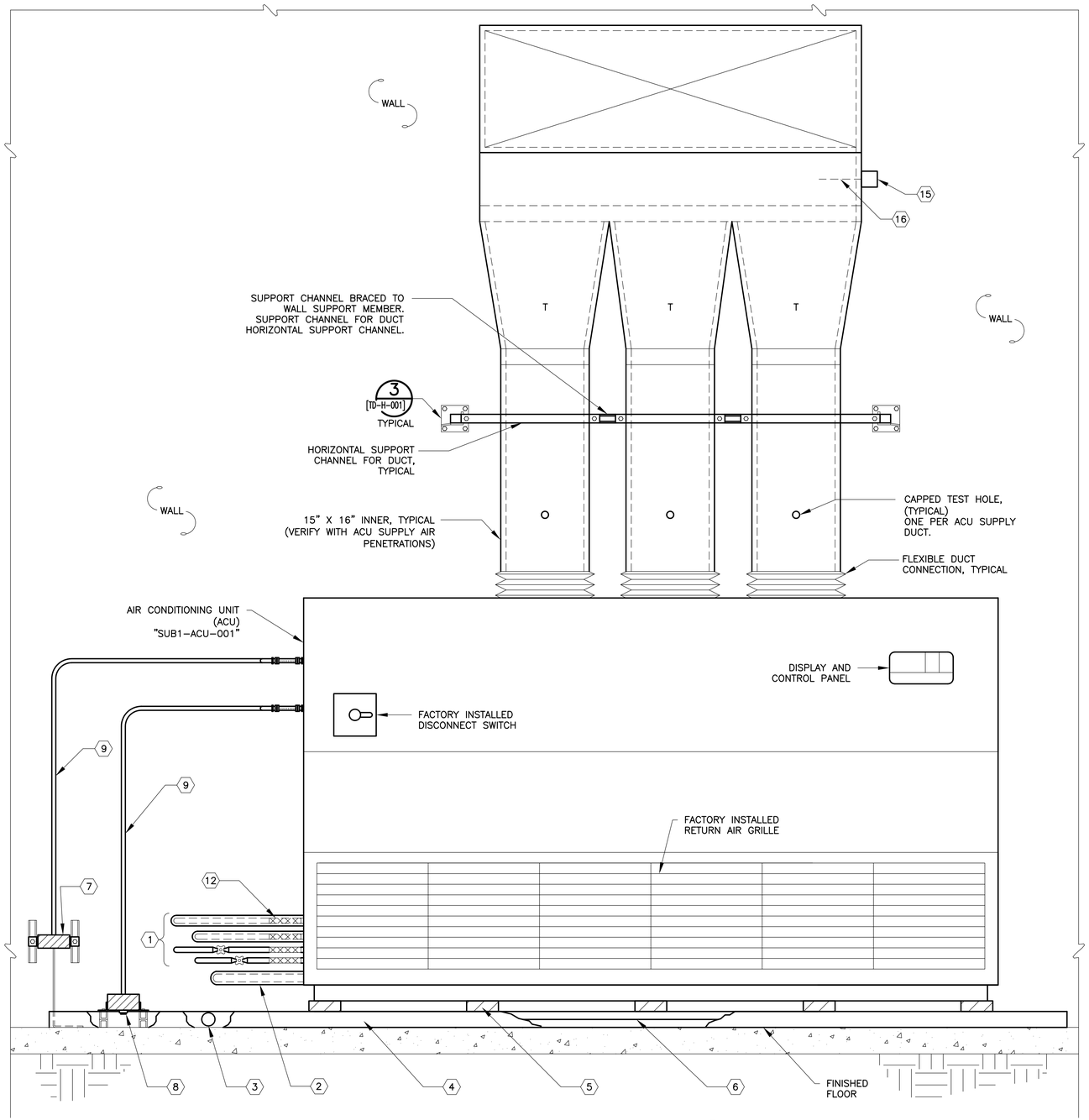

AIR CONDITIONING UNIT "SUB1-ACU-001" FRONT ELEVATION

(A) [SUB1-H-003]

SCALE: 1"=1'-0"

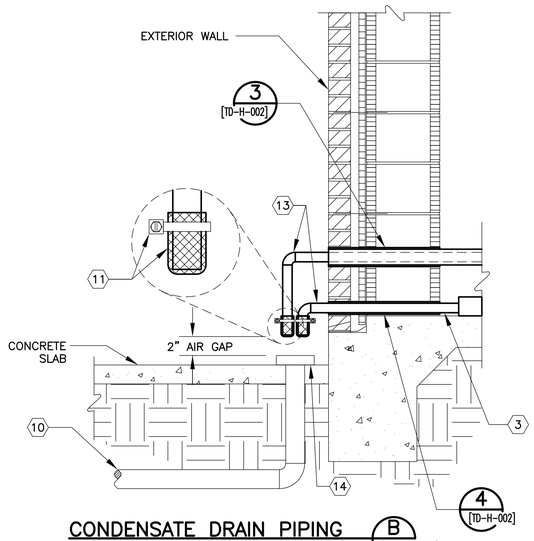

CONDENSATE DRAIN PIPING SIDE ELEVATION

(B) [SUB1-H-004]

SCALE: 1"=1'-0"

KEY NOTES:

1. REFRIGERANT LINES. INSTALL AND SIZE PER MANUFACTURER REQUIREMENTS. REFERENCE SPECIFICATIONS FOR ADDITIONAL INFORMATION.
2. PRIMARY CONDENSATE DRAIN. REFERENCE DETAIL THREE ON DRAWING NO. [TD-H-002].
3. SECONDARY (OVERFLOW) CONDENSATE DRAIN. REFERENCE DETAIL FOUR ON DRAWING NO. [TD-H-002].
4. 3" DEEP 316 SS DRAIN PAN. REFERENCE DRAWING NO. [SUB1-H-004] KEY NOTE SEVEN.
5. PROVIDE NEOPRENE ISOLATOR BETWEEN SUPPORT STAND AND BOTTOM OF UNIT. INSTALL 1" BEYOND PERIMETER OF UNIT. PROVIDE TEN (10) 6" X 6" FACTORY CUT PADS FOR UNIT. REFERENCE DETAIL THREE ON DRAWING NO. [TD-H-003].
6. CUTAWAY THROUGH PAN SHOWN FOR CLARITY ONLY. PROVIDE 3" TALL 316 SS DOUBLE CHANNEL SUPPORT FRAME (UNISTRUT) STRUCTURE. FRAME FULL PERIMETER OF UNIT AND PROVIDE 3 INTERNAL WEBS. REFERENCE DETAIL THREE ON DRAWING NO. [TD-H-003].
7. "WDT-1". REFERENCE DRAWING NO. [SUB1-H-004] KEY NOTE ONE. REFERENCE DETAIL THREE ON DRAWING NO. [TD-H-003] FOR ASSEMBLY.
8. "WDT-2". REFERENCE DRAWING NO. [SUB1-H-004] KEY NOTE THREE. REFERENCE DETAIL THREE ON DRAWING NO. [TD-H-003] FOR ASSEMBLY.
9. PROVIDE POWER AND CONTROL CABLES AND CONDUITS FOR WDT PER DIV 16 REQUIREMENTS. SUPPORT CONDUIT PER DIV 16 REQUIREMENTS. PROVIDE FLEXIBLE CONDUIT CONNECTIONS AT ACU UNIT AND WDT UNITS.
10. STORM WATER DRAIN PIPE. REFER TO CIVIL DRAWINGS.
11. PROVIDE 1/8" 316 SS MESH AT TERMINAL END OF CONDENSATE DRAINS. FASTEN MESH TO PIPE WITH 316 SS MECHANICAL SCREW SET COUPLING, EACH.
12. REFRIGERANT PIPING FLEXIBLE CONNECTOR. PROVIDE ONE CONNECTOR AT EACH OF FOUR (4) REFRIGERANT PIPE UNIT CONNECTIONS.
13. REFERENCE CIVIL DRAWINGS FOR DRAIN LOCATION. COORDINATE CONDENSATE SLEEVE LOCATIONS WITH DRAIN IN PLAN VIEW. LOCATE PRIMARY AND SECONDARY DRAIN TERMINATIONS ABOVE DRAIN. PROVIDE 2" AIR GAP.
14. DRAIN. REFERENCE CIVIL DRAWINGS FOR EXACT LOCATION AND HEIGHT. CONCRETE SLAB HEIGHT SCHEMATIC ONLY – REFERENCE CIVIL DRAWINGS.
15. SUPPLY DUCT PRESSURE INDICATING TRANSMITTER "SUB1-PIT-1415". REFER TO DIVISION 17 FOR ADDITIONAL REQUIREMENTS. FASTEN THE TRANSMITTER ON THE EXTERIOR SIDE OF THE DUCT WITH SHEETMETAL SCREWS. PENETRATE THE DUCT AND INSERT THE TRANSMITTER MANUFACTURER STATIC DUCT PROBE. COORDINATE WITH DIVISION 17 CONTRACTOR FOR CONTROL CABLE/CONDUIT CONNECTIONS.
16. STATIC DUCT PROBE FURNISHED BY SUPPLY DUCT PRESSURE TRANSMITTER MANUFACTURER.

BAR LENGTH ON ORIGINAL DRAWING EQUALS ONE INCH, ADJUST SCALE ACCORDINGLY.

REUSE OF DOCUMENTS

This document, and the designs incorporated herein, is an instrument of professional service that has been developed, designed and prepared by Harutunian Engineering, Inc., and is not to be used, in whole or in part, for any other project without giving written notice to Harutunian Engineering, Inc.

NO.	DATE:	DESCRIPTION

HARUTUNIAN ENGINEERING INCORPORATED

TEXAS FIRM REGISTRATION NUMBER F-2408

ENGINEERING AND ENVIRONMENTAL CONSULTANTS
8100 CROSS PARK DRIVE
AUSTIN, TEXAS 78754

STATE OF TEXAS · VIGAIN HARUTUNIAN · 87736 · REGISTERED · PROFESSIONAL ENGINEER · 10/7/2019

DESIGNED BY:	HEI
CHECKED BY:	HEI
APPROVED BY:	HEI
SUBMITTAL DATE:	OCTOBER 2019
SCALE:	AS SHOWN

SOUTH AUSTIN REGIONAL WASTEWATER TREATMENT PLANT
ELECTRICAL SUBSTATION NO. 1 REPLACEMENT PROJECT
CIP I.D.# 3333.032

SUBSTATION NO. 1 SUB1-ACU-001 FRONT ELEVATION – PROPOSED

PROJECT NO: 2014-300 | SHT. 595 OF 866 | DWG NO. SUB1-H-006

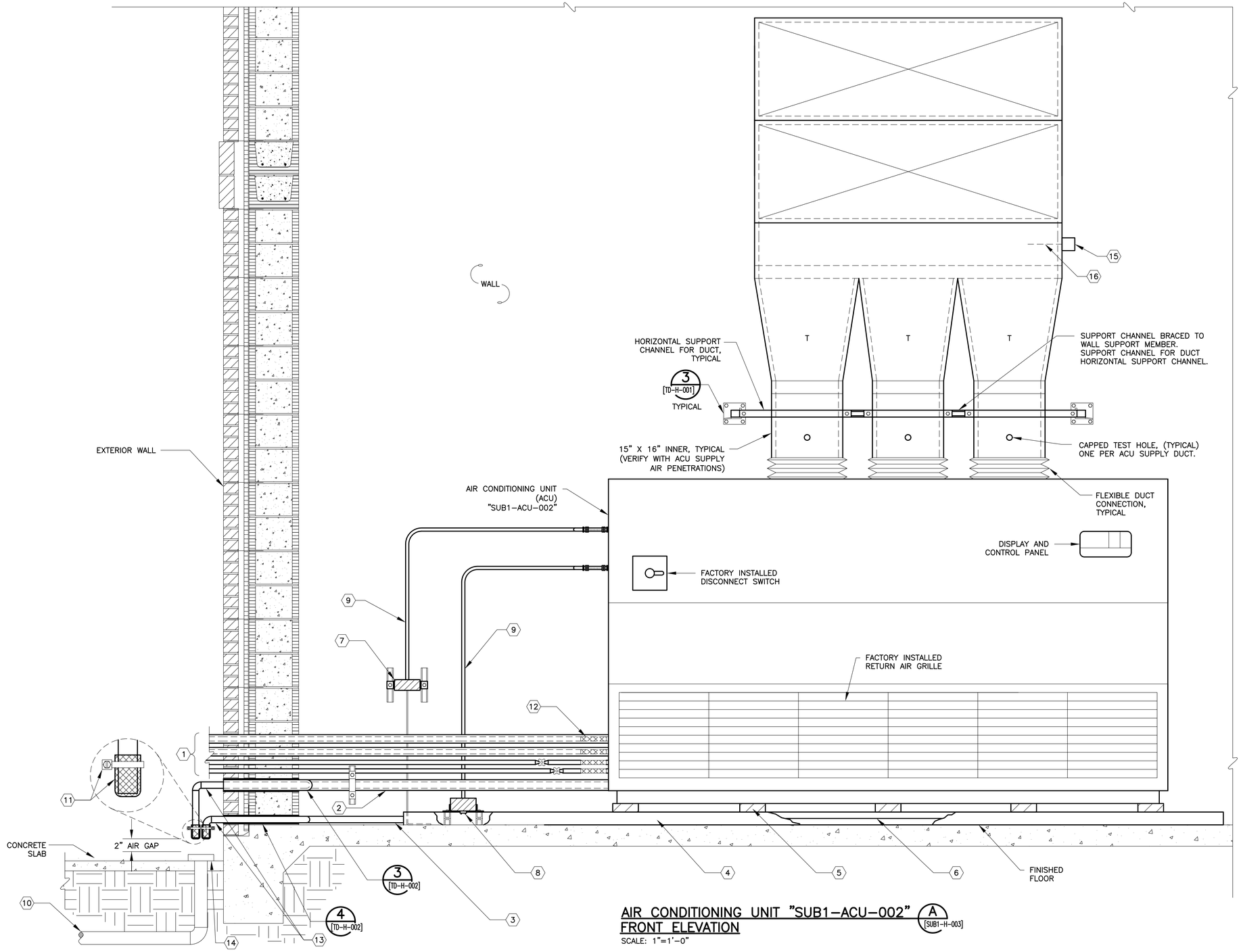

AIR CONDITIONING UNIT "SUB1-ACU-002" FRONT ELEVATION (A [SUB1-H-003])

SCALE: 1"=1'-0"

KEY NOTES:

1. REFRIGERANT LINES. INSTALL AND SIZE PER MANUFACTURER REQUIREMENTS. REFERENCE SPECIFICATIONS FOR ADDITIONAL INFORMATION.
2. PRIMARY CONDENSATE DRAIN. REFERENCE DETAIL THREE ON DRAWING NO. [TD-H-002].
3. SECONDARY (OVERFLOW) CONDENSATE DRAIN. REFERENCE DETAIL FOUR ON DRAWING NO. [TD-H-002].
4. 3" DEEP 316 SS DRAIN PAN. REFERENCE DRAWING NO. [SUB1-H-005] KEY NOTE SEVEN.
5. PROVIDE NEOPRENE ISOLATOR BETWEEN SUPPORT STAND AND BOTTOM OF UNIT. INSTALL 1" BEYOND PERIMETER OF UNIT. PROVIDE TEN (10) 6" X 6" FACTORY CUT PADS FOR UNIT. REFERENCE DETAIL THREE ON DRAWING NO. [TD-H-003].
6. CUTAWAY THROUGH PAN SHOWN FOR CLARITY ONLY. PROVIDE 3" TALL 316 SS DOUBLE CHANNEL SUPPORT FRAME (UNISTRUT) STRUCTURE. FRAME FULL PERIMETER OF UNIT AND PROVIDE 3 INTERNAL WEBS. REFERENCE DETAIL THREE ON DRAWING NO. [TD-H-003].
7. "WDT-1". REFERENCE DRAWING NO. [SUB1-H-005] KEY NOTE ONE. REFERENCE DETAIL THREE ON DRAWING NO. [TD-H-003] FOR ASSEMBLY.
8. "WDT-2". REFERENCE DRAWING NO. [SUB1-H-005] KEY NOTE THREE. REFERENCE DETAIL THREE ON DRAWING NO. [TD-H-003] FOR ASSEMBLY.
9. PROVIDE POWER AND CONTROL CABLES AND CONDUITS FOR WDT PER DIV 16 REQUIREMENTS. SUPPORT CONDUIT PER DIV 16 REQUIREMENTS. PROVIDE FLEXIBLE CONDUIT CONNECTIONS AT ACU UNIT AND WDT UNITS.
10. STORM WATER DRAIN PIPE. REFER TO CIVIL DRAWINGS.
11. PROVIDE 1/8" 316 SS MESH AT TERMINAL END OF CONDENSATE DRAINS. FASTEN MESH TO PIPE WITH 316 SS MECHANICAL SCREW SET COUPLING, EACH.
12. REFRIGERANT PIPING FLEXIBLE CONNECTOR. PROVIDE ONE CONNECTOR AT EACH OF FOUR (4) REFRIGERANT PIPE UNIT CONNECTIONS.
13. REFERENCE CIVIL DRAWINGS FOR DRAIN LOCATION. COORDINATE CONDENSATE SLEEVE LOCATIONS WITH DRAIN IN PLAN VIEW. LOCATE PRIMARY AND SECONDARY DRAIN TERMINATIONS ABOVE DRAIN. PROVIDE 2" AIR GAP.
14. DRAIN. REFERENCE CIVIL DRAWINGS FOR EXACT LOCATION AND HEIGHT. CONCRETE SLAB HEIGHT SCHEMATIC ONLY – REFERENCE CIVIL DRAWINGS.
15. SUPPLY DUCT PRESSURE INDICATING TRANSMITTER "SUB1-PIT-1425". REFER TO DIVISION 17 FOR ADDITIONAL REQUIREMENTS. FASTEN THE TRANSMITTER ON THE EXTERIOR SIDE OF THE DUCT WITH SHEETMETAL SCREWS. PENETRATE THE DUCT AND INSERT THE TRANSMITTER MANUFACTURER STATIC DUCT PROBE. COORDINATE WITH DIVISION 17 CONTRACTOR FOR CONTROL CABLE/CONDUIT CONNECTIONS.
16. STATIC DUCT PROBE FURNISHED BY SUPPLY DUCT PRESSURE TRANSMITTER MANUFACTURER.

BAR LENGTH ON ORIGINAL DRAWING EQUALS ONE INCH, ADJUST SCALE ACCORDINGLY.

REUSE OF DOCUMENTS

This document, and the designs incorporated herein, is an instrument of professional service that has been developed, designed and prepared by Harutunian Engineering, Inc., and is not to be used, in whole or in part, for any other project without giving written notice to Harutunian Engineering, Inc.

NO.	DATE:	DESCRIPTION

HARUTUNIAN ENGINEERING INCORPORATED

TEXAS FIRM REGISTRATION NUMBER F-2408

ENGINEERING AND ENVIRONMENTAL CONSULTANTS
8100 CROSS PARK DRIVE
AUSTIN, TEXAS 78754

STATE OF TEXAS · VIGAIN HARUTUNIAN · 87736 · REGISTERED · PROFESSIONAL ENGINEER · 10/7/2019

DESIGNED BY:	HEI
CHECKED BY:	HEI
APPROVED BY:	HEI
SUBMITTAL DATE:	OCTOBER 2019
SCALE:	AS SHOWN

SOUTH AUSTIN REGIONAL WASTEWATER TREATMENT PLANT
ELECTRICAL SUBSTATION NO. 1 REPLACEMENT PROJECT
CIP I.D.# 3333.032

SUBSTATION NO. 1 SUB1-ACU-002 FRONT ELEVATION – PROPOSED

PROJECT NO: 2014-300 | SHT. 596 OF 866 | DWG NO. SUB1-H-007

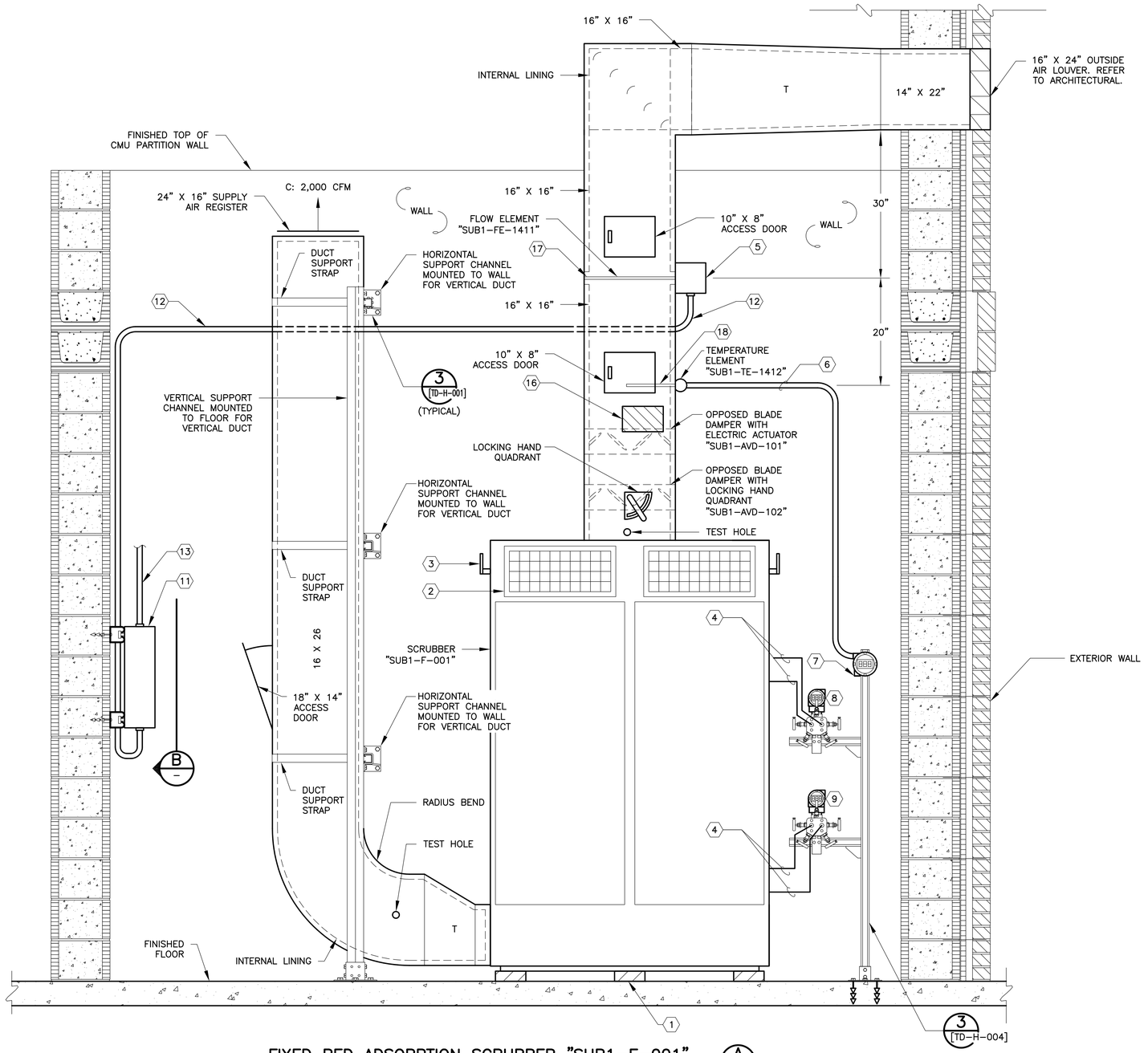

FIXED BED ADSORPTION SCRUBBER "SUB1-F-001" UNIT FRONT ELEVATION

A [SUB1-H-003],[SUB1-H-004]

SCALE: 1"=1'-0"

KEY NOTES (CONTINUED):

16. MOTORIZED DAMPER "SUB1-AVD-101". REFER TO SPECIFICATIONS FOR THE ELECTRIC ACTUATOR REQUIREMENTS. INSTALL ACTUATOR TO DAMPER AND PROVIDE ALL REQUIRED FACTORY LINKAGES AND SUPPORT ACCESSORIES FOR A FULLY FUNCTIONAL SYSTEM. FURNISH ALL POWER/CONTROL CABLE CONNECTIONS PER MANUFACTURER WRITTEN INSTRUCTIONS. INSTALL AND CONFIGURE THE ACTUATOR SUCH THAT THE ACTUATOR SPRING RETURN POSITIONS THE DAMPER TO THE FULLY OPEN POSITION UPON LOSS OF POWER TO THE ACTUATOR. CONFIGURE THE DAMPER ACTUATOR SUCH THAT A 4 mA INPUT SIGNAL EQUATES TO THE FULLY OPEN DAMPER POSITION, AND A 20 mA INPUT SIGNAL EQUATES TO THE FULLY CLOSED DAMPER POSITION. FURNISH, INSTALL AND WIRE THE BELIMO ZG-R01 RESISTOR INSIDE THE ACTUATOR HOUSING TO ALLOW FOR A 4-20 mA INPUT SETPOINT SIGNAL. UPON LOSS OF THE SETPOINT POSITION SIGNAL TO THE ACTUATOR, THE DAMPER SHALL FAIL TO THE FULLY OPEN DAMPER POSITION.
17. OUTSIDE AIR FLOW ELEMENT "SUB1-FE-1411". REFER TO DIVISION 17 FOR ADDITIONAL REQUIREMENTS. COORDINATE WITH DIVISION 17 CONTRACTOR FOR CONTROL CABLE/CONDUIT CONNECTIONS. INSTALL IN SUPPLY AIR DUCT IN STRICT ACCORDANCE TO MANUFACTURER REQUIREMENTS.
18. TEMPERATURE ELEMENT "SUB1-TE-1412". LENGTH OF THERMAL WELL SHALL BE BASED ON DUCT DEPTH AND SIZE. REFER TO DIVISION 17 SPECIFICATIONS FOR ADDITIONAL REQUIREMENTS.

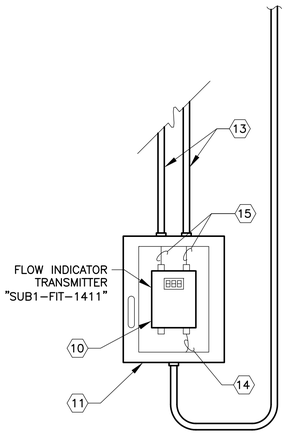

ENCLOSURE FRONT ELEVATION

B

SCALE: 1"=1'-0"

KEY NOTES:

1. PROVIDE NEOPRENE ISOLATOR BETWEEN FINISHED FLOOR AND BOTTOM OF UNIT. INSTALL 1" BEYOND PERIMETER OF UNIT. PROVIDE SIX (6) 6"X6" FACTORY CUT PADS FOR UNIT.
2. 8"H X 20"W RETURN AIR GRILLE (TYPICAL). MANUFACTURER SHALL INSTALL AN ALUMINUM OPPOSED BLADE DAMPER ON THE INSIDE NECK OF EACH RETURN AIR GRILLE. DAMPER SHALL BE EXTRUDED ALUMINUM WITH 1" MAXIMUM BLADE WIDTH, POSITIONED HORIZONTALLY. WHERE GRILLE IS 8"H, DAMPER SHALL HAVE EIGHT (8) BLADES.
3. SCRUBBER UNIT MANUFACTURER SHALL PROVIDE A 304 SS MANUAL LOCKING HAND QUADRANT FOR EACH GRILLE OPPOSED BLADE DAMPER. LOCATE HAND QUADRANT AT THE EXTERIOR OF THE UNIT AS SHOWN.
4. STAINLESS STEEL TUBING STATIC AIR LINES PER DIVISION 17 REQUIREMENTS. COORDINATE LOCATION OF STATIC PRESSURE TAPS ON UNIT WITH MANUFACTURER.
5. TYPE 316 STAINLESS STEEL SHEETMETAL ENCLOSURE FOR SENSOR LOW CONTROL VOLTAGE CABLES. CONSTRUCT PER SMACNA DUCT STANDARDS FOR 20-INCH PRESSURE RATED RECTANGULAR DUCT AND WITH SAME MATERIAL SPECIFIED FOR THE SCRUBBER OUTSIDE AIR DUCT. FASTEN TO DUCT WORK WITH STAINLESS STEEL SHEET METAL SCREWS TO ALLOW FOR FUTURE REMOVAL AS REQUIRED FOR SENSOR SERVICE. SHOWN DIMENSIONS SHALL BE 6"HX6"W. DEPTH SHALL BE EXTERIOR WIDTH OF DUCT. ELECTRICAL CONTRACTOR SHALL TAP INTO ENCLOSURE TO MOUNT CONDUIT FOR SENSOR CABLES.
6. TEMPERATURE SENSOR CONDUIT. SUPPORT BY WALL WHERE POSSIBLE PER ELECTRICAL REQUIREMENTS.
7. TEMPERATURE INDICATOR TRANSMITTER "SUB1-TIT-1412" PER DIVISION 17 REQUIREMENTS. REFERENCE ELECTRICAL FOR CONTROL/POWER CONDUIT/CABLES.
8. STAGE 1 FILTER DIFFERENTIAL PRESSURE INDICATOR TRANSMITTER, ELECTRONIC "SUB1-PDIT-1413" PER DIVISION 17 REQUIREMENTS. REFERENCE ELECTRICAL FOR CONTROL/POWER CONDUIT/CABLES.
9. STAGE 4 FILTER DIFFERENTIAL PRESSURE INDICATOR TRANSMITTER, ELECTRONIC "SUB1-PDIT-1414" PER DIVISION 17 REQUIREMENTS. REFERENCE ELECTRICAL FOR CONTROL/POWER CONDUIT/CABLES.
10. OUTSIDE AIR FLOW INDICATING TRANSMITTER "SUB1-FIT-1411". REFER TO DIVISION 17 FOR ADDITIONAL REQUIREMENTS. COORDINATE WITH DIVISION 17 CONTRACTOR FOR CONTROL CABLE/CONDUIT CONNECTIONS. INSTALL IN ENCLOSURE AND FASTEN WITH STAINLESS STEEL SCREWS.
11. WINDOWED DOOR ENCLOSURE WITH NON-LOCKING HANDLE. PER DIVISION 17 REQUIREMENTS. REFERENCE ELECTRICAL FOR CONTROL/POWER CONDUIT/CABLES. LOCATION SHOWN IS SCHEMATIC. REFER TO ELECTRICAL DRAWINGS FOR TO SCALE PLAN VIEW LOCATION OF UNIT.
12. SENSOR CABLE AND CONDUIT. PER ELECTRICAL REQUIREMENTS.
13. POWER INPUT CABLE/CONDUIT AND CONTROL OUTPUT CABLE/CONDUIT. REFERENCE ELECTRICAL DRAWINGS.
14. SENSOR MANUFACTURER CABLE BETWEEN FLOW INDICATOR TRANSMITTER "SUB1-FIT-1411" AND FLOW ELEMENT "SUB1-FE-1411". COORDINATE LENGTH OF SENSOR CABLE WITH FIELD CONDITIONS. BUDGET FOR A 50 FOOT SENSOR CABLE PER PROBE.
15. LABEL EACH CABLE AS "POWER" OR "CONTROL" INSIDE THE ENCLOSURE. REFER TO ADDITIONAL REQUIREMENTS IN ELECTRICAL DOCUMENTS.

BAR LENGTH ON ORIGINAL DRAWING EQUALS ONE INCH, ADJUST SCALE ACCORDINGLY.

REUSE OF DOCUMENTS

This document, and the designs incorporated herein, is an instrument of professional service that has been developed, designed and prepared by Harutunian Engineering, Inc., and is not to be used, in whole or in part, for any other project without giving written notice to Harutunian Engineering, Inc.

NO.	DATE:	DESCRIPTION

HARUTUNIAN ENGINEERING INCORPORATED

TEXAS FIRM REGISTRATION NUMBER F-2408

ENGINEERING AND ENVIRONMENTAL CONSULTANTS
8100 CROSS PARK DRIVE
AUSTIN, TEXAS 78754

STATE OF TEXAS — VIGAIN HARUTUNIAN — 87736 — REGISTERED PROFESSIONAL ENGINEER — 10/7/2019

DESIGNED BY:	HEI
CHECKED BY:	HEI
APPROVED BY:	HEI
SUBMITTAL DATE:	OCTOBER 2019
SCALE:	AS SHOWN

SOUTH AUSTIN REGIONAL WASTEWATER TREATMENT PLANT
ELECTRICAL SUBSTATION NO. 1 REPLACEMENT PROJECT
CIP I.D.# 3333.032

SUBSTATION NO. 1 SUB1-F-001
FRONT ELEVATION – PROPOSED

PROJECT NO: 2014-300 | SHT. 597 OF 866 | DWG NO. SUB1-H-008

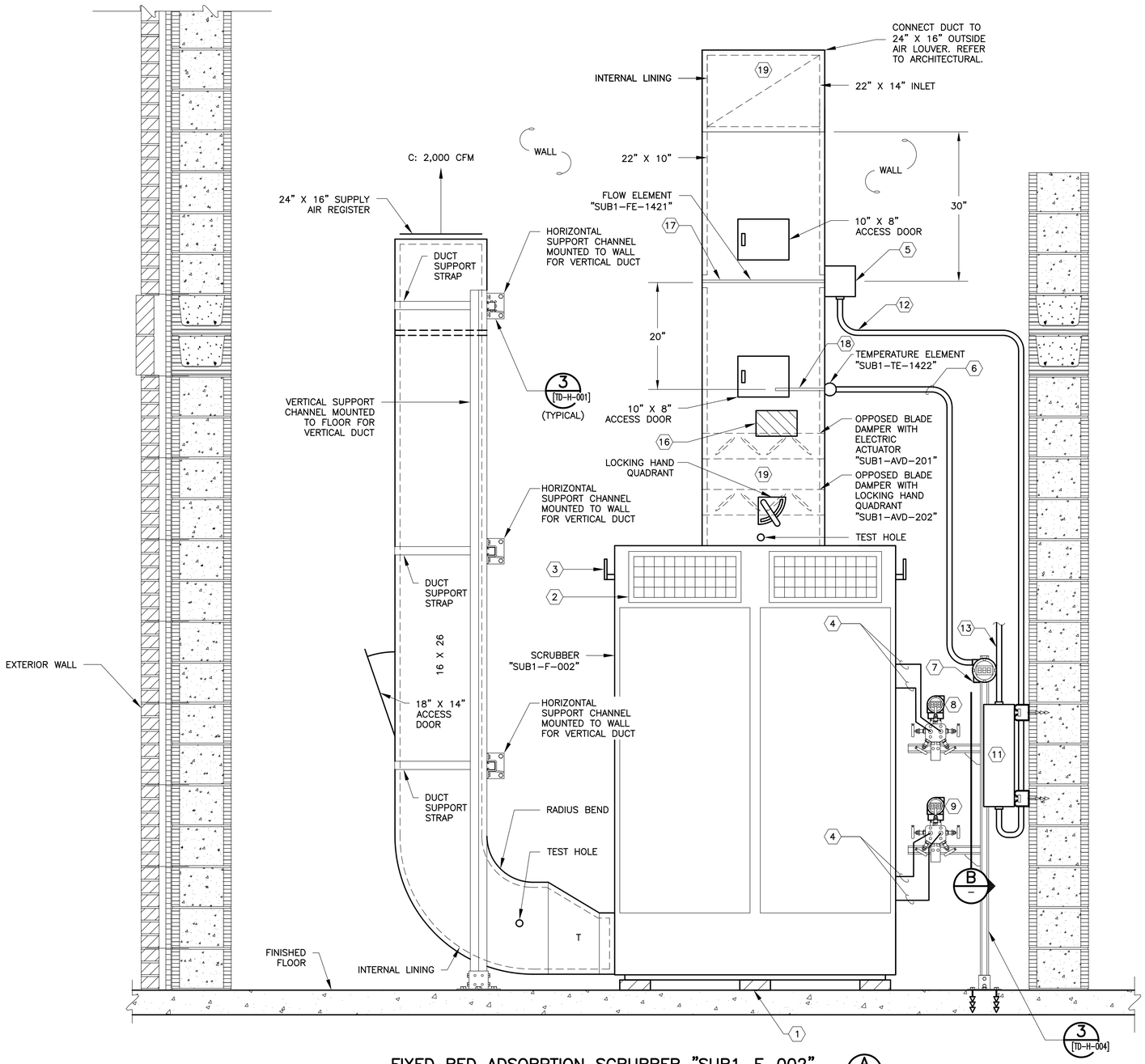

FIXED BED ADSORPTION SCRUBBER "SUB1-F-002" UNIT FRONT ELEVATION (A) [SUB1-H-003],[SUB1-H-005]

SCALE: 1"=1'-0"

KEY NOTES (CONTINUED):

16. MOTORIZED DAMPER "SUB1-AVD-201". REFER TO THE SPECIFICATIONS FOR THE ELECTRIC ACTUATOR REQUIREMENTS. INSTALL ACTUATOR TO DAMPER AND PROVIDE ALL REQUIRED FACTORY LINKAGES AND SUPPORT ACCESSORIES FOR A FULLY FUNCTIONAL SYSTEM. FURNISH ALL POWER/CONTROL CABLE CONNECTIONS PER MANUFACTURER WRITTEN INSTRUCTIONS. INSTALL AND CONFIGURE THE ACTUATOR SUCH THAT THE ACTUATOR SPRING RETURN POSITIONS THE DAMPER TO THE FULLY OPEN POSITION UPON LOSS OF POWER TO THE ACTUATOR. CONFIGURE THE DAMPER ACTUATOR SUCH THAT A 4 mA INPUT SIGNAL EQUATES TO THE FULLY OPEN DAMPER POSITION, AND A 20 mA INPUT SIGNAL EQUATES TO THE FULLY CLOSED DAMPER POSITION. FURNISH, INSTALL AND WIRE THE BELIMO ZG-R01 RESISTOR INSIDE THE ACTUATOR HOUSING TO ALLOW FOR A 4-20 mA INPUT SETPOINT SIGNAL. UPON LOSS OF THE SETPOINT POSITION SIGNAL TO THE ACTUATOR, THE DAMPER SHALL FAIL TO THE FULLY OPEN DAMPER POSITION.
17. OUTSIDE AIR FLOW ELEMENT "SUB1-FE-1421". REFER TO DIVISION 17 FOR ADDITIONAL REQUIREMENTS. COORDINATE WITH DIVISION 17 CONTRACTOR FOR CONTROL CABLE/CONDUIT CONNECTIONS. INSTALL IN SUPPLY AIR DUCT IN STRICT ACCORDANCE TO MANUFACTURER REQUIREMENTS.
18. TEMPERATURE ELEMENT "SUB1-TE-1422". LENGTH OF THERMAL WELL SHALL BE BASED ON DUCT DEPTH AND SIZE. REFER TO DIVISION 17 SPECIFICATIONS FOR ADDITIONAL REQUIREMENTS.
19. NOTE, THE OUTSIDE AIR DUCT IS NOT CENTERED IN ELEVATION VIEW ONTO THE THE SCRUBBER. THE OUTSIDE AIR DUCT POSITION SHALL BE INSTALLED PER THE OUTSIDE AIR LOUVER LOCATION. COORDINATE THE OUTSIDE AIR DUCT OPENING LOCATION WITH SCRUBBER MANUFACTURER AFTER VERIFYING THE LOUVER LOCATION.

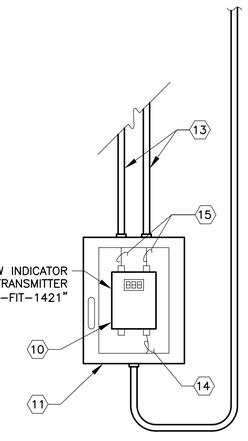

ENCLOSURE FRONT ELEVATION (B)

SCALE: 1"=1'-0"

KEY NOTES:

1. PROVIDE NEOPRENE ISOLATOR BETWEEN FINISHED FLOOR AND BOTTOM OF UNIT. INSTALL 1" BEYOND PERIMETER OF UNIT. PROVIDE SIX (6) 6"X6" FACTORY CUT PADS FOR UNIT.
2. 8"H X 20"W RETURN AIR GRILLE (TYPICAL). MANUFACTURER SHALL INSTALL AN ALUMINUM OPPOSED BLADE DAMPER ON THE INSIDE NECK OF EACH RETURN AIR GRILLE. DAMPER SHALL BE EXTRUDED ALUMINUM WITH 1" MAXIMUM BLADE WIDTH, POSITIONED HORIZONTALLY. WHERE GRILLE IS 8"H, DAMPER SHALL HAVE EIGHT (8) BLADES.
3. SCRUBBER UNIT MANUFACTURER SHALL PROVIDE A 304 SS MANUAL LOCKING HAND QUADRANT FOR EACH GRILLE OPPOSED BLADE DAMPER. LOCATE HAND QUADRANT AT THE EXTERIOR OF THE UNIT AS SHOWN.
4. STAINLESS STEEL TUBING STATIC AIR LINES PER DIVISION 17 REQUIREMENTS. COORDINATE LOCATION OF STATIC PRESSURE TAPS ON UNIT WITH MANUFACTURER.
5. TYPE 316 STAINLESS STEEL SHEETMETAL ENCLOSURE FOR SENSOR LOW CONTROL VOLTAGE CABLES. CONSTRUCT PER SMACNA DUCT STANDARDS FOR 20-INCH PRESSURE RATED RECTANGULAR DUCT AND WITH SAME MATERIAL SPECIFIED FOR THE SCRUBBER OUTSIDE AIR DUCT. FASTEN TO DUCT WORK WITH STAINLESS STEEL SHEET METAL SCREWS TO ALLOW FOR FUTURE REMOVAL AS REQUIRED FOR SENSOR SERVICE. SHOWN DIMENSIONS SHALL BE 6"HX6"W. DEPTH SHALL BE EXTERIOR WIDTH OF DUCT. ELECTRICAL CONTRACTOR SHALL TAP INTO ENCLOSURE TO MOUNT CONDUIT FOR SENSOR CABLES.
6. TEMPERATURE SENSOR CONDUIT. SUPPORT BY WALL WHERE POSSIBLE PER ELECTRICAL REQUIREMENTS.
7. TEMPERATURE INDICATOR TRANSMITTER "SUB1-TIT-1422" PER DIVISION 17 REQUIREMENTS. REFERENCE ELECTRICAL FOR CONTROL/POWER CONDUIT/CABLES.
8. STAGE 1 FILTER DIFFERENTIAL PRESSURE INDICATOR TRANSMITTER, ELECTRONIC "SUB1-PDIT-1423" PER DIVISION 17 REQUIREMENTS. REFERENCE ELECTRICAL FOR CONTROL/POWER CONDUIT/CABLES.
9. STAGE 4 FILTER DIFFERENTIAL PRESSURE INDICATOR TRANSMITTER, ELECTRONIC "SUB1-PDIT-1424" PER DIVISION 17 REQUIREMENTS. REFERENCE ELECTRICAL FOR CONTROL/POWER CONDUIT/CABLES.
10. OUTSIDE AIR FLOW INDICATING TRANSMITTER "SUB1-FIT-1421". REFER TO DIVISION 17 FOR ADDITIONAL REQUIREMENTS. COORDINATE WITH DIVISION 17 CONTRACTOR FOR CONTROL CABLE/CONDUIT CONNECTIONS. INSTALL IN ENCLOSURE AND FASTEN WITH STAINLESS STEEL SCREWS.
11. WINDOWED DOOR ENCLOSURE WITH NON-LOCKING HANDLE. PER DIVISION 17 REQUIREMENTS. REFERENCE ELECTRICAL FOR CONTROL/POWER CONDUIT/CABLES. LOCATION SHOWN IS SCHEMATIC. REFER TO ELECTRICAL DRAWINGS FOR TO SCALE PLAN VIEW LOCATION OF UNIT.
12. SENSOR CABLE AND CONDUIT. PER ELECTRICAL REQUIREMENTS.
13. POWER INPUT CABLE/CONDUIT AND CONTROL OUTPUT CABLE/CONDUIT. REFERENCE ELECTRICAL DRAWINGS.
14. SENSOR MANUFACTURER CABLE BETWEEN FLOW INDICATOR TRANSMITTER "SUB1-FIT-1421" AND FLOW ELEMENT "SUB1-FE-1421". COORDINATE LENGTH OF SENSOR CABLE WITH FIELD CONDITIONS. BUDGET FOR A 50 FOOT SENSOR CABLE PER PROBE.
15. LABEL EACH CABLE AS "POWER" OR "CONTROL" INSIDE THE ENCLOSURE. REFER TO ADDITIONAL REQUIREMENTS IN ELECTRICAL DOCUMENTS.

BAR LENGTH ON ORIGINAL DRAWING EQUALS ONE INCH, ADJUST SCALE ACCORDINGLY.

REUSE OF DOCUMENTS

This document, and the designs incorporated herein, is an instrument of professional service that has been developed, designed and prepared by Harutunian Engineering, Inc., and is not to be used, in whole or in part, for any other project without giving written notice to Harutunian Engineering, Inc.

NO.	DATE:	DESCRIPTION

HARUTUNIAN ENGINEERING INCORPORATED

TEXAS FIRM REGISTRATION NUMBER F-2408

ENGINEERING AND ENVIRONMENTAL CONSULTANTS
8100 CROSS PARK DRIVE
AUSTIN, TEXAS 78754

STATE OF TEXAS · VIGAIN HARUTUNIAN · 87736 · REGISTERED PROFESSIONAL ENGINEER · 10/7/2019

DESIGNED BY:	HEI
CHECKED BY:	HEI
APPROVED BY:	HEI
SUBMITTAL DATE:	OCTOBER 2019
SCALE:	AS SHOWN

SOUTH AUSTIN REGIONAL WASTEWATER TREATMENT PLANT
ELECTRICAL SUBSTATION NO. 1 REPLACEMENT PROJECT
CIP I.D.# 3333.032

SUBSTATION NO. 1 SUB1-F-002 FRONT ELEVATION – PROPOSED

PROJECT NO: 2014-300 | SHT. 598 OF 866 | DWG NO. SUB1-H-009

GENERAL NOTES:

1. GASEOUS AIR ABSORPTION SCRUBBER "SUB1–F–001" IS NOT SHOWING IN AIR CONDITIONING UNITS SECTION, FOR CLARITY.
2. DUCT DIMENSIONS ARE INTERNAL CLEAR AIR PATH DIMENSIONS.
3. SECTION DRAWING DOES NOT SHOW GASEOUS AIR ADSORPTION SCRUBBER "SUB1–F–001" AND ASSOCIATED DUCTWORK AND ACCESSORIES IN BACKGROUND FOR CLARITY.

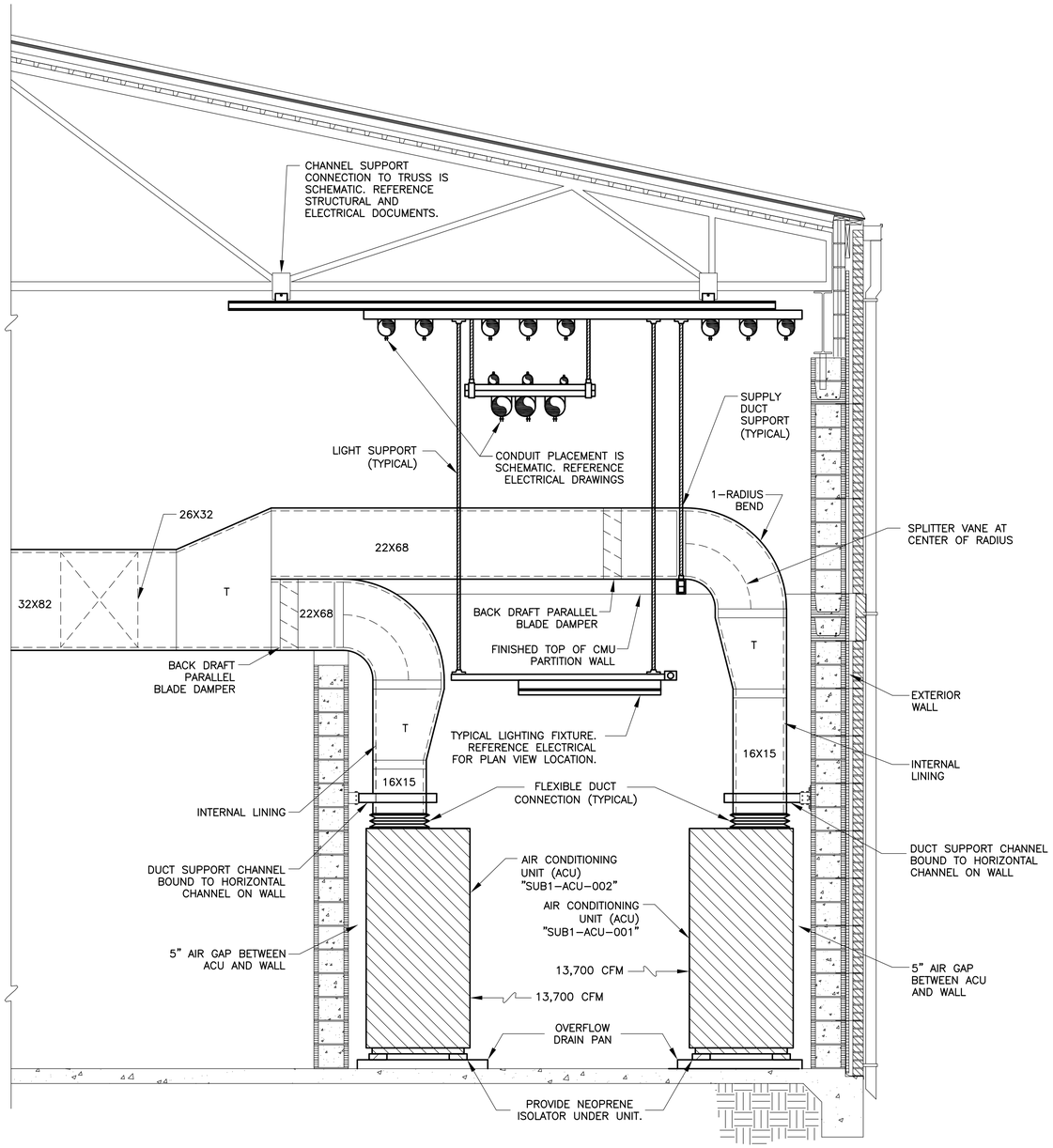

SECTION "SUB1–ACU–001" AND "SUB1–ACU–002" (A) [SUB1–H–003]

SCALE: 1/2"=1'–0"

BAR LENGTH ON ORIGINAL DRAWING EQUALS ONE INCH, ADJUST SCALE ACCORDINGLY.

REUSE OF DOCUMENTS

This document, and the designs incorporated herein, is an instrument of professional service that has been developed, designed and prepared by Harutunian Engineering, Inc., and is not to be used, in whole or in part, for any other project without giving written notice to Harutunian Engineering, Inc.

NO.	DATE:	DESCRIPTION

HARUTUNIAN ENGINEERING INCORPORATED
TEXAS FIRM REGISTRATION NUMBER F–2408
ENGINEERING AND ENVIRONMENTAL CONSULTANTS
8100 CROSS PARK DRIVE
AUSTIN, TEXAS 78754

STATE OF TEXAS · VIGAIN HARUTUNIAN · 87736 · REGISTERED · PROFESSIONAL ENGINEER
10/7/2019

DESIGNED BY:	HEI
CHECKED BY:	HEI
APPROVED BY:	HEI
SUBMITTAL DATE:	OCTOBER 2019
SCALE:	AS SHOWN

SOUTH AUSTIN REGIONAL WASTEWATER TREATMENT PLANT
ELECTRICAL SUBSTATION NO. 1 REPLACEMENT PROJECT
CIP I.D.# 3333.032

SUBSTATION NO. 1 ACU SYSTEMS SIDE ELEVATIONS – PROPOSED

PROJECT NO: 2014–300 | SHT. 599 OF 866 | DWG NO. SUB1–H–010

GENERAL NOTES:

1. DUCT DIMENSIONS ARE INTERNAL CLEAR AIR PATH DIMENSIONS.

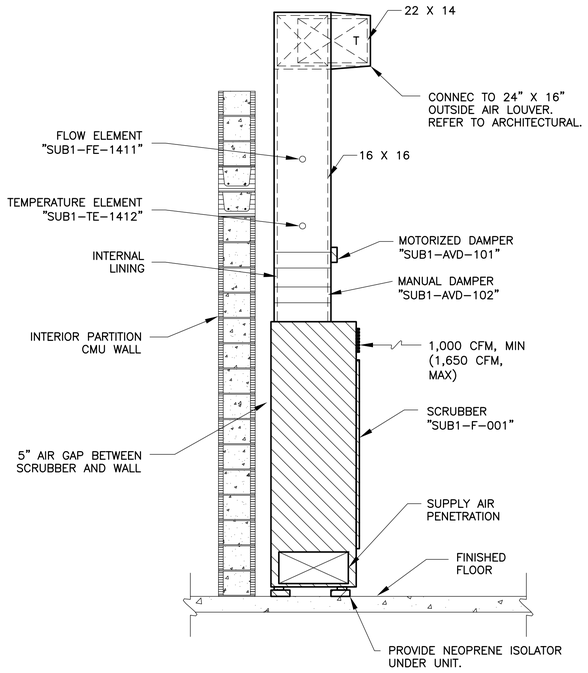

SECTION "SUB1-F-001" (A) [SUB1-H-004]

SCALE: 1/2"=1'-0"

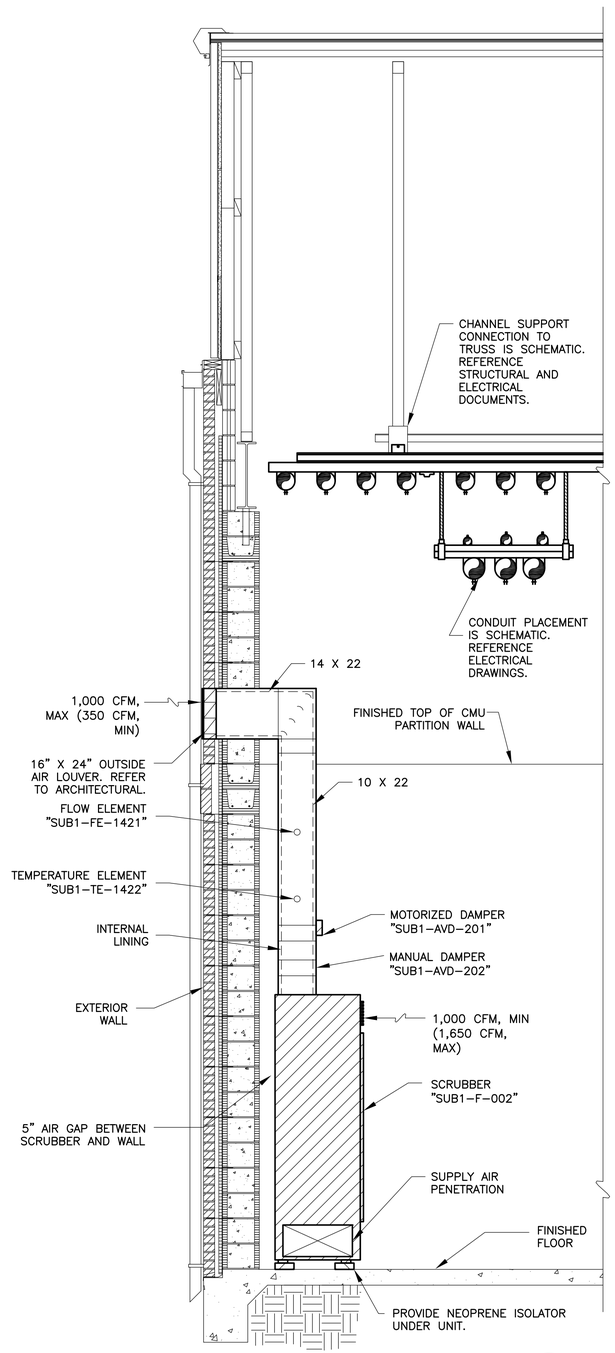

SECTION "SUB1-F-002" (B) [SUB1-H-005]

SCALE: 1/2"=1'-0"

BAR LENGTH ON ORIGINAL DRAWING EQUALS ONE INCH, ADJUST SCALE ACCORDINGLY.

REUSE OF DOCUMENTS

This document, and the designs incorporated herein, is an instrument of professional service that has been developed, designed and prepared by Harutunian Engineering, Inc., and is not to be used, in whole or in part, for any other project without giving written notice to Harutunian Engineering, Inc.

NO.	DATE:	DESCRIPTION

HARUTUNIAN ENGINEERING INCORPORATED

TEXAS FIRM REGISTRATION NUMBER F-2408

ENGINEERING AND ENVIRONMENTAL CONSULTANTS
8100 CROSS PARK DRIVE
AUSTIN, TEXAS 78754

STATE OF TEXAS — VIGAIN HARUTUNIAN 87736 — REGISTERED PROFESSIONAL ENGINEER — 10/7/2019

DESIGNED BY:	HEI
CHECKED BY:	HEI
APPROVED BY:	HEI
SUBMITTAL DATE:	OCTOBER 2019
SCALE:	AS SHOWN

SOUTH AUSTIN REGIONAL WASTEWATER TREATMENT PLANT
ELECTRICAL SUBSTATION NO. 1 REPLACEMENT PROJECT
CIP I.D.# 3333.032

SUBSTATION NO. 1 SCRUBBER SYSTEMS SIDE ELEVATIONS – PROPOSED

PROJECT NO: 2014-300 | SHT. 600 OF 866 | DWG NO. SUB1-H-011

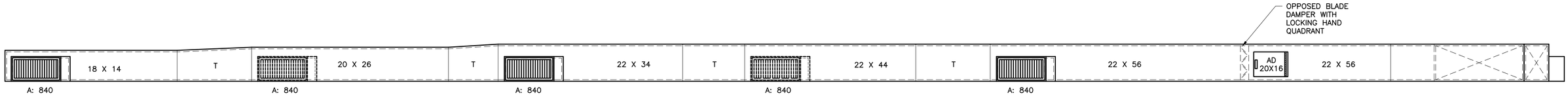

SECTION A
SCALE: N.T.S. [SUB1-H-003]

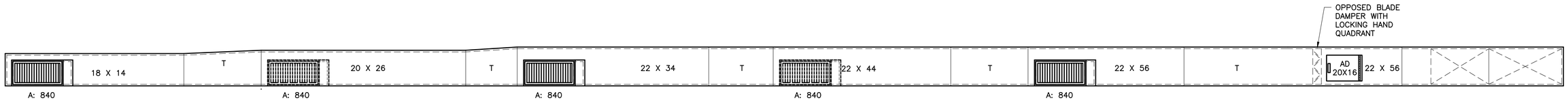

SECTION B
SCALE: N.T.S. [SUB1-H-003]

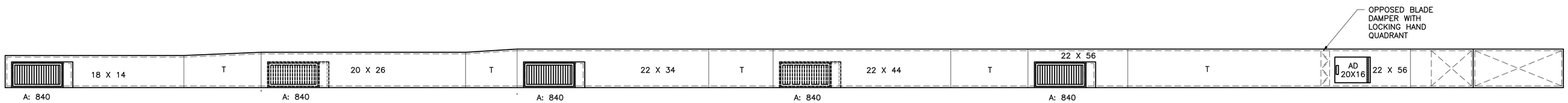

SECTION C
SCALE: N.T.S. [SUB1-H-003]

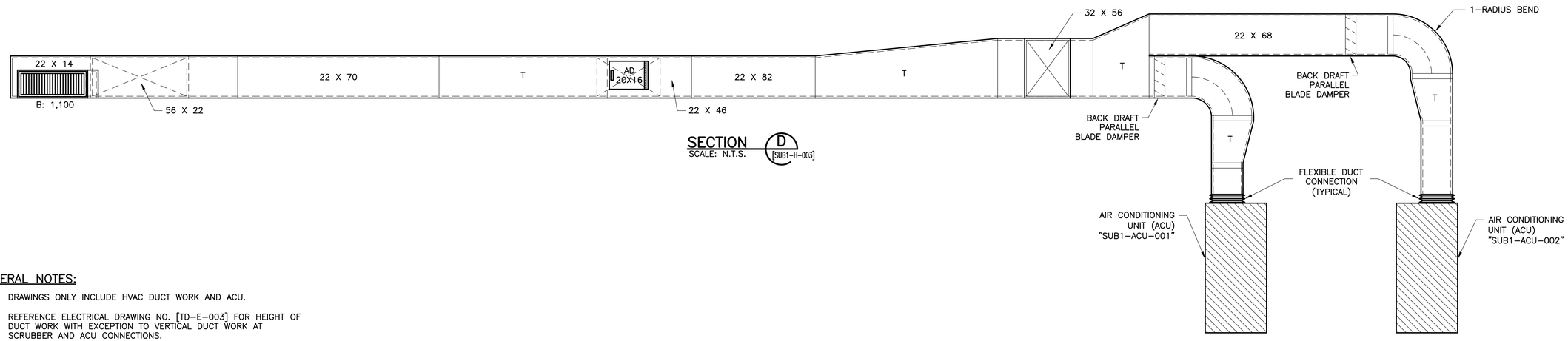

SECTION D
SCALE: N.T.S. [SUB1-H-003]

GENERAL NOTES:

1. DRAWINGS ONLY INCLUDE HVAC DUCT WORK AND ACU.
2. REFERENCE ELECTRICAL DRAWING NO. [TD-E-003] FOR HEIGHT OF DUCT WORK WITH EXCEPTION TO VERTICAL DUCT WORK AT SCRUBBER AND ACU CONNECTIONS.
3. DUCT DIMENSIONS ARE INTERNAL CLEAR AIR PATH DIMENSIONS.

BAR LENGTH ON ORIGINAL DRAWING EQUALS ONE INCH, ADJUST SCALE ACCORDINGLY.

REUSE OF DOCUMENTS

This document, and the designs incorporated herein, is an instrument of professional service that has been developed, designed and prepared by Harutunian Engineering, Inc., and is not to be used, in whole or in part, for any other project without giving written notice to Harutunian Engineering, Inc.

NO.	DATE:	DESCRIPTION

HARUTUNIAN ENGINEERING INCORPORATED
TEXAS FIRM REGISTRATION NUMBER F-2408
ENGINEERING AND ENVIRONMENTAL CONSULTANTS
8100 CROSS PARK DRIVE
AUSTIN, TEXAS 78754

STATE OF TEXAS
VIGAIN HARUTUNIAN
87736
REGISTERED
PROFESSIONAL ENGINEER
10/7/2019

DESIGNED BY:	HEI
CHECKED BY:	HEI
APPROVED BY:	HEI
SUBMITTAL DATE:	OCTOBER 2019
SCALE:	AS SHOWN

SOUTH AUSTIN REGIONAL WASTEWATER TREATMENT PLANT
ELECTRICAL SUBSTATION NO. 1 REPLACEMENT PROJECT
CIP I.D.# 3333.032

SUBSTATION NO. 1 ACU SUPPLY DUCTWORK PROFILES – PROPOSED

PROJECT NO: 2014-300 | SHT. 601 OF 866 | DWG NO. SUB1-H-012

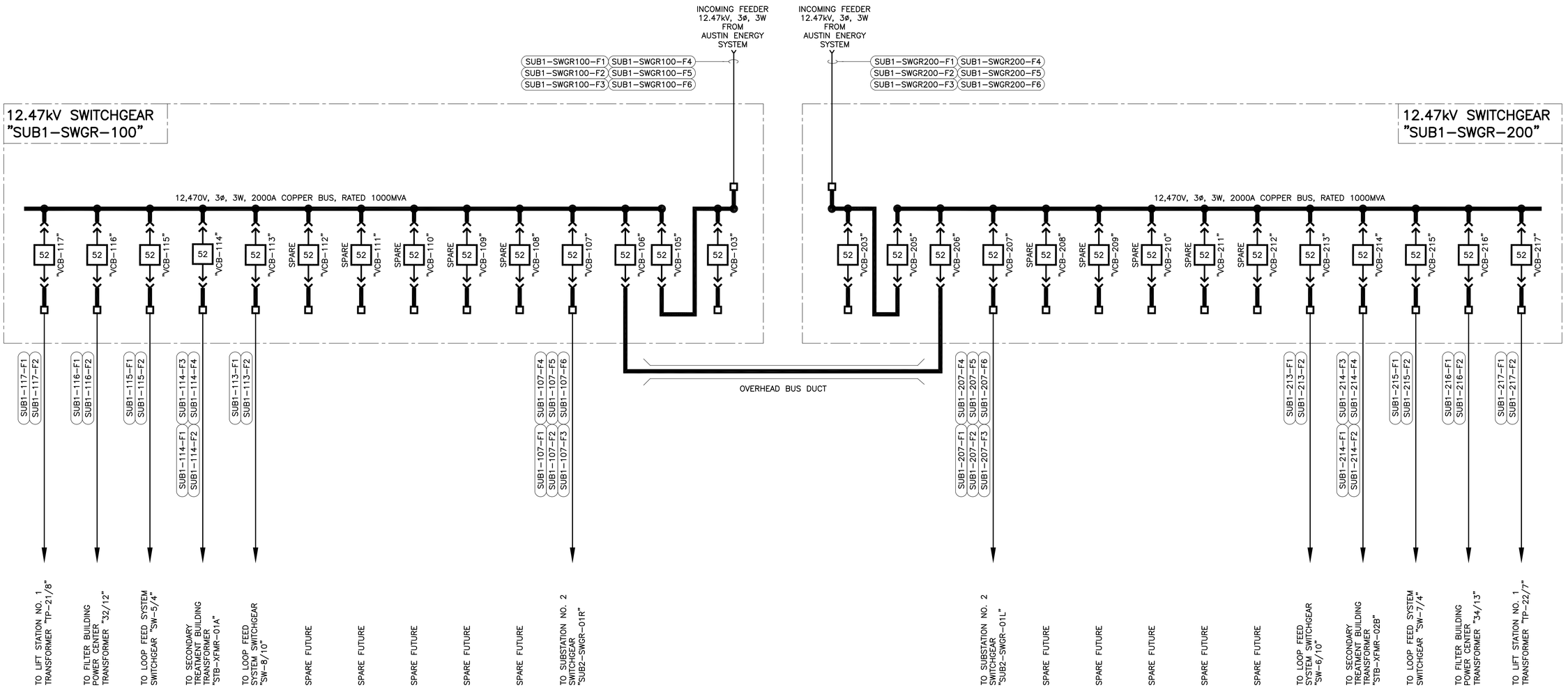

GENERAL NOTES:

1. THIS DRAWING IS INTENDED TO REPRESENT AN OVERVIEW OF THE PROPOSED POWER DISTRIBUTION SYSTEM. ONLY MAJOR ELECTRICAL EQUIPMENT HAS BEEN SHOWN FOR CLARITY.

BAR LENGTH ON ORIGINAL DRAWING EQUALS ONE INCH, ADJUST SCALE ACCORDINGLY.

REUSE OF DOCUMENTS

This document, and the designs incorporated herein, is an instrument of professional service that has been developed, designed and prepared by Harutunian Engineering, Inc., and is not to be used, in whole or in part, for any other project without giving written notice to Harutunian Engineering, Inc.

NO.	DATE:	DESCRIPTION

HARUTUNIAN ENGINEERING INCORPORATED

TEXAS FIRM REGISTRATION NUMBER F-2408

ENGINEERING AND ENVIRONMENTAL CONSULTANTS
8100 CROSS PARK DRIVE
AUSTIN, TEXAS 78754

STATE OF TEXAS
SHANT HARUTUNIAN
87735
REGISTERED
PROFESSIONAL ENGINEER
10/7/2019

DESIGNED BY:	HEI
CHECKED BY:	HEI
APPROVED BY:	HEI
SUBMITTAL DATE:	OCTOBER 2019
SCALE:	AS SHOWN

SOUTH AUSTIN REGIONAL WASTEWATER TREATMENT PLANT
ELECTRICAL SUBSTATION NO. 1 REPLACEMENT PROJECT
CIP I.D.# 3333.032

SUBSTATION NO. 1
SUB1-SWGR-01A & SUB1-SWGR-01B
OVERALL ONE-LINE DIAGRAM - PROPOSED

PROJECT NO: 2014-300 | SHT. 602 OF 866 | DWG NO. SUB1-E-001

GENERAL NOTES:

1. THIS DRAWING IS INTENDED TO REPRESENT AN OVERVIEW OF THE PROPOSED POWER DISTRIBUTION SYSTEM. ONLY MAJOR ELECTRICAL EQUIPMENT HAS BEEN SHOWN FOR CLARITY.

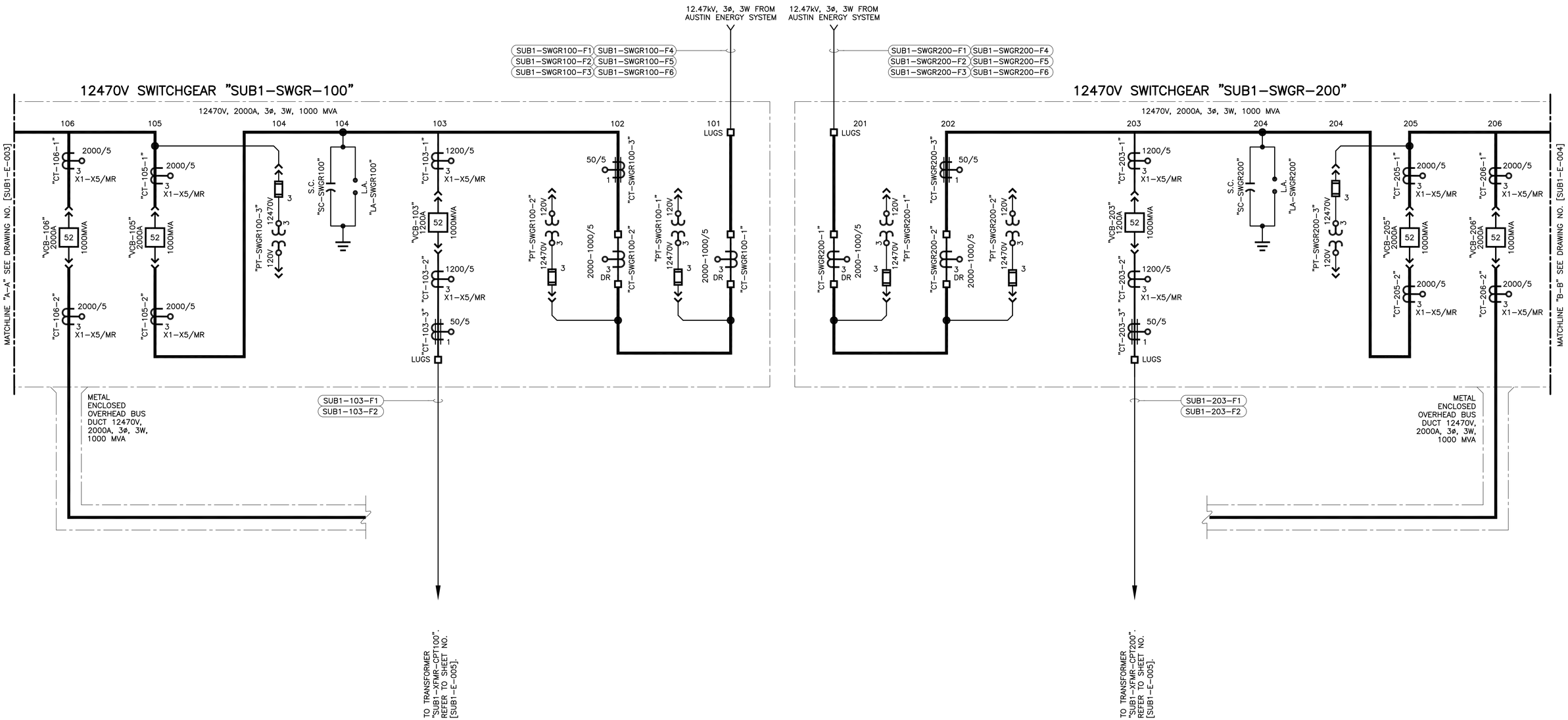

BAR LENGTH ON ORIGINAL DRAWING EQUALS ONE INCH, ADJUST SCALE ACCORDINGLY.

REUSE OF DOCUMENTS

This document, and the designs incorporated herein, is an instrument of professional service that has been developed, designed and prepared by Harutunian Engineering, Inc., and is not to be used, in whole or in part, for any other project without giving written notice to Harutunian Engineering, Inc.

NO.	DATE:	DESCRIPTION

HARUTUNIAN ENGINEERING INCORPORATED
TEXAS FIRM REGISTRATION NUMBER F-2408
ENGINEERING AND ENVIRONMENTAL CONSULTANTS
8100 CROSS PARK DRIVE
AUSTIN, TEXAS 78754

STATE OF TEXAS
SHANT HARUTUNIAN
87735
REGISTERED
PROFESSIONAL ENGINEER
10/7/2019

DESIGNED BY:	HEI
CHECKED BY:	HEI
APPROVED BY:	HEI
SUBMITTAL DATE:	OCTOBER 2019
SCALE:	AS SHOWN

SOUTH AUSTIN REGIONAL WASTEWATER TREATMENT PLANT
ELECTRICAL SUBSTATION NO. 1 REPLACEMENT PROJECT
CIP I.D.# 3333.032

SUBSTATION NO. 1 OVERALL ONE-LINE DIAGRAM - PROPOSED (SHEET 1 OF 4)

PROJECT NO: 2014-300 | SHT. 603 OF 866 | DWG NO. SUB1-E-002

GENERAL NOTES:

1. THIS DRAWING IS INTENDED TO REPRESENT AN OVERVIEW OF THE PROPOSED POWER DISTRIBUTION SYSTEM. ONLY MAJOR ELECTRICAL EQUIPMENT HAS BEEN SHOWN FOR CLARITY.

12470V SWITCHGEAR "SUB1-SWGR-100"

12470V, 2000A, 3ø, 3W, 1000 MVA

117	116	115	114	113	112	111	110	109	108	107
"CT-117-1" 1200/5 3 X1-X5/MR	"CT-116-1" 1200/5 3 X1-X5/MR	"CT-115-1" 1200/5 3 X1-X5/MR	"CT-114-1" 1200/5 3 X1-X5/MR	"CT-113-1" 1200/5 3 X1-X5/MR	"CT-112-1" 1200/5 3 X1-X5/MR	"CT-111-1" 1200/5 3 X1-X5/MR	"CT-110-1" 1200/5 3 X1-X5/MR	"CT-109-1" 1200/5 3 X1-X5/MR	"CT-108-1" 1200/5 3 X1-X5/MR	"CT-107-1" 1200/5 3 X1-X5/MR
"VCB-117" 1200A 52 1000MVA	"VCB-116" 1200A 52 1000MVA	"VCB-115" 1200A 52 1000MVA	"VCB-114" 1200A 52 1000MVA	"VCB-113" 1200A 52 1000MVA	"VCB-112" 1200A 52 1000MVA SPARE	"VCB-111" 1200A 52 1000MVA SPARE	"VCB-110" 1200A 52 1000MVA SPARE	"VCB-109" 1200A 52 1000MVA SPARE	"VCB-108" 1200A 52 1000MVA SPARE	"VCB-107" 1200A 52 1000MVA
"CT-117-2" 1200/5 3 X1-X5/MR	"CT-116-2" 1200/5 3 X1-X5/MR	"CT-115-2" 1200/5 3 X1-X5/MR	"CT-114-2" 1200/5 3 X1-X5/MR	"CT-113-2" 1200/5 3 X1-X5/MR	"CT-112-2" 1200/5 3 X1-X5/MR	"CT-111-2" 1200/5 3 X1-X5/MR	"CT-110-2" 1200/5 3 X1-X5/MR	"CT-109-2" 1200/5 3 X1-X5/MR	"CT-108-2" 1200/5 3 X1-X5/MR	"CT-107-2" 1200/5 3 X1-X5/MR
"CT-117-3" 50/5 1	"CT-116-3" 50/5 1	"CT-115-3" 50/5 1	"CT-114-3" 50/5 1	"CT-113-3" 50/5 1	"CT-112-3" 50/5 1	"CT-111-3" 50/5 1	"CT-110-3" 50/5 1	"CT-109-3" 50/5 1	"CT-108-3" 50/5 1	"CT-107-3" 50/5 1
LUGS	LUGS	LUGS	LUGS	LUGS	LUGS	LUGS	LUGS	LUGS	LUGS	LUGS
SUB1-117-F1 SUB1-117-F2	SUB1-116-F1 SUB1-116-F2	SUB1-115-F1 SUB1-115-F2	SUB1-114-F1 SUB1-114-F2 SUB1-114-F3 SUB1-114-F4	SUB1-113-F1 SUB1-113-F2						SUB1-107-F1 SUB1-107-F2 SUB1-107-F3 SUB1-107-F4 SUB1-107-F5 SUB1-107-F6
TO LIFT STATION NO. 1 TRANSFORMER "TF-21/8"	TO FILTER BUILDING POWER CENTER TRANSFORMER "32/12"	TO LOOP FEED SYSTEM SWITCHGEAR "SW-5/4"	TO SECONDARY TREATMENT BUILDING TRANSFORMER "STB-XFMR-01A"	TO LOOP FEED SYSTEM SWITCHGEAR "SW-8/10"	SPARE FUTURE	SPARE FUTURE	SPARE FUTURE	SPARE FUTURE	SPARE FUTURE	TO SUBSTATION NO. 2 SWITCHGEAR "SUB2-SWGR-01R"

MATCHLINE "A-A" SEE DRAWING NO. [SUB1-E-002]

BAR LENGTH ON ORIGINAL DRAWING EQUALS ONE INCH, ADJUST SCALE ACCORDINGLY.

REUSE OF DOCUMENTS

This document, and the designs incorporated herein, is an instrument of professional service that has been developed, designed and prepared by Harutunian Engineering, Inc., and is not to be used, in whole or in part, for any other project without giving written notice to Harutunian Engineering, Inc.

NO.	DATE:	DESCRIPTION

HARUTUNIAN ENGINEERING INCORPORATED
TEXAS FIRM REGISTRATION NUMBER F-2408
ENGINEERING AND ENVIRONMENTAL CONSULTANTS
8100 CROSS PARK DRIVE
AUSTIN, TEXAS 78754

STATE OF TEXAS
SHANT HARUTUNIAN
87735
REGISTERED
PROFESSIONAL ENGINEER
10/7/2019

DESIGNED BY:	HEI
CHECKED BY:	HEI
APPROVED BY:	HEI
SUBMITTAL DATE:	OCTOBER 2019
SCALE:	AS SHOWN

SOUTH AUSTIN REGIONAL WASTEWATER TREATMENT PLANT
ELECTRICAL SUBSTATION NO. 1 REPLACEMENT PROJECT
CIP I.D.# 3333.032

SUBSTATION NO. 1 OVERALL ONE-LINE DIAGRAM – PROPOSED (SHEET 2 OF 4)

PROJECT NO: 2014-300 | SHT. 604 OF 866 | DWG NO. SUB1-E-003

GENERAL NOTES:

1. THIS DRAWING IS INTENDED TO REPRESENT AN OVERVIEW OF THE PROPOSED POWER DISTRIBUTION SYSTEM. ONLY MAJOR ELECTRICAL EQUIPMENT HAS BEEN SHOWN FOR CLARITY.

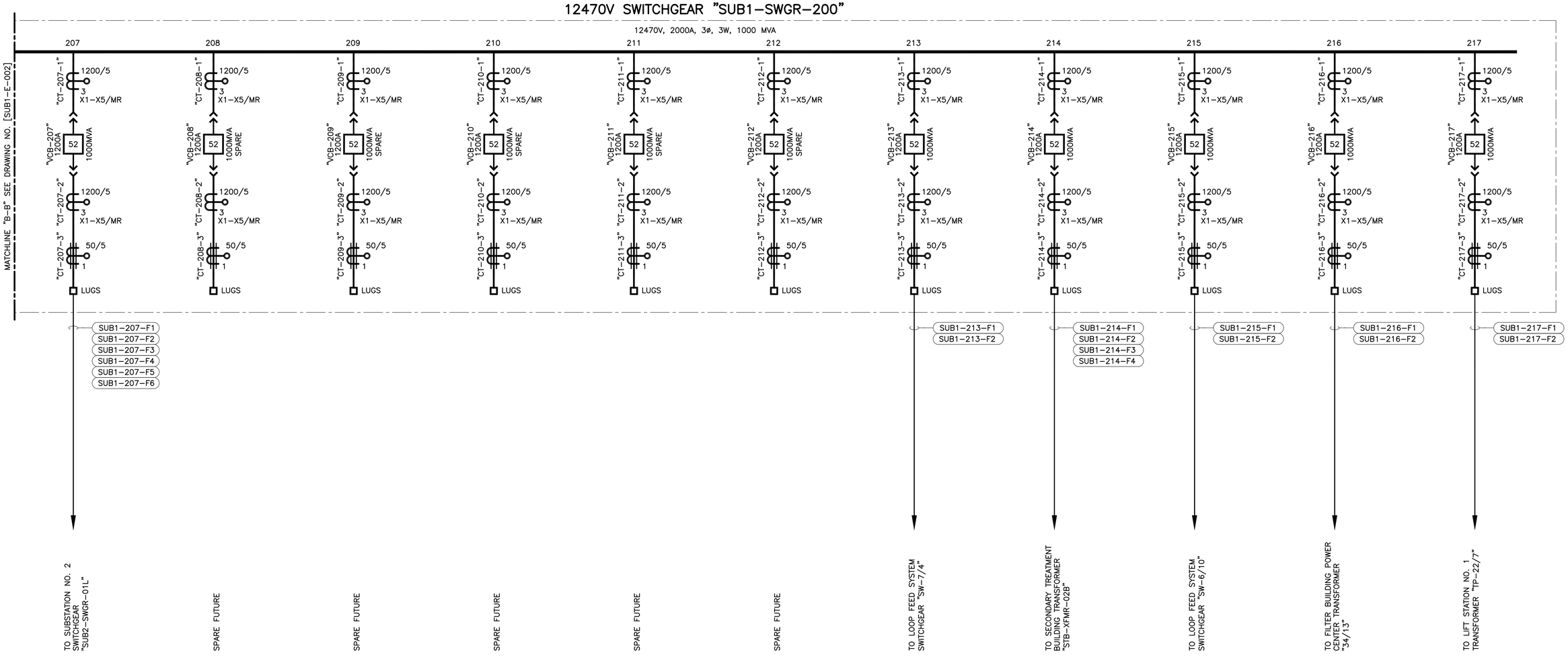

BAR LENGTH ON ORIGINAL DRAWING EQUALS ONE INCH, ADJUST SCALE ACCORDINGLY.

REUSE OF DOCUMENTS

This document, and the designs incorporated herein, is an instrument of professional service that has been developed, designed and prepared by Harutunian Engineering, Inc., and is not to be used, in whole or in part, for any other project without giving written notice to Harutunian Engineering, Inc.

NO.	DATE:	DESCRIPTION

HARUTUNIAN ENGINEERING INCORPORATED
TEXAS FIRM REGISTRATION NUMBER F-2408
ENGINEERING AND ENVIRONMENTAL CONSULTANTS
8100 CROSS PARK DRIVE
AUSTIN, TEXAS 78754

STATE OF TEXAS
SHANT HARUTUNIAN
87735
REGISTERED
PROFESSIONAL ENGINEER
10/7/2019

DESIGNED BY:	HEI
CHECKED BY:	HEI
APPROVED BY:	HEI
SUBMITTAL DATE:	OCTOBER 2019
SCALE:	AS SHOWN

SOUTH AUSTIN REGIONAL WASTEWATER TREATMENT PLANT
ELECTRICAL SUBSTATION NO. 1 REPLACEMENT PROJECT
CIP I.D.# 3333.032

SUBSTATION NO. 1 OVERALL ONE-LINE DIAGRAM - PROPOSED (SHEET 3 OF 4)

PROJECT NO: 2014-300 | SHT. 605 OF 866 | DWG NO. SUB1-E-004

12.47kV FROM SWITCHGEAR "SUB1-SWGR-100". REFER TO SHEET NO. [SUB1-E-002].

SUB1-103-F1
SUB1-103-F2

TRANSFORMER "SUB1-XFMR-CPT100"
500kVA 3ø Δ12470V Y480/277V

PULLBOX "SUB1-PBOX-ATS1N"

SUB1-BKRATS1N-F1
SUB1-BKRATS1N-F2
SUB1-BKRATS1N-F3
SUB1-BKRATS1N-F4
SUB1-BKRATS1N-F5
SUB1-BKRATS1N-F6

SUB1-BKRATS1N-F1
SUB1-BKRATS1N-F3
SUB1-BKRATS1N-F5

CB 3P-600A "BKR-ATS1N"

SUB1-ATS1-NF1
SUB1-ATS1-NF2

12.47kV FROM SWITCHGEAR "SUB1-SWGR-200". REFER TO SHEET NO. [SUB1-E-002].

SUB1-203-F1
SUB1-203-F2

TRANSFORMER "SUB1-XFMR-CPT200"
12470V Δ 500kVA 480/277V Y 3ø

PULLBOX "SUB1-PBOX-ATS1E"

SUB1-BKRATS1E-F1
SUB1-BKRATS1E-F2
SUB1-BKRATS1E-F3
SUB1-BKRATS1E-F4
SUB1-BKRATS1E-F5
SUB1-BKRATS1E-F6

SUB1-BKRATS1E-F1
SUB1-BKRATS1E-F3
SUB1-BKRATS1E-F5

CB 3P-600A "BKR-ATS1E"

SUB1-ATS1-EF1
SUB1-ATS1-EF2

"SUB1-ATS-001"
AUTOMATIC TRANSFER AND BYPASS ISOLATION SWITCH
3P-600A, 3ø, 3W, 480VAC, 50kA W.C.R

NORM
EMERG.
NORM BP
EMERG. BP

SUB1-PDP1-F1
SUB1-PDP1-F2

CB 3P-600A "BKR-PDP1"

"SUB1-PDP-001"
480V, 600A, 3ø, 3W, 42,000 A.I.C.

CB 3P-70A "BKR-XFMRLP1"
CB 3P-20A "BKR-SPDPDP1"
CB 2P-40A "BKR-XFMRCHGR1"
CB 2P-40A "BKR-XFMRCHGR2"
CB 2P-80A "BKR-XFMRPDP2"

SUB1-XFMRLP1-P
SUB1-SPDPDP1-P
SUB1-XFMRCHGR1-P
SUB1-XFMRCHGR2-P
SUB1-XFMRPDP2-P

TRANSFORMER "SUB1-XFMR-LP1"
45kVA 3ø Δ480V Y208/120V

SPD "SUB1-SPD-PDP1"

ULTRA-ISOLATOR TRANSFORMER "SUB1-XFMR-CHGR1"
15kVA 1ø ∠480V ∠480V

ULTRA-ISOLATOR TRANSFORMER "SUB1-XFMR-CHGR2"
15kVA 1ø ∠480V ∠480V

ULTRA-ISOLATOR TRANSFORMER "SUB1-XFMR-PDP2"
30kVA 1ø ∠480V ∠240/120V

SUB1-LP1-P

"SUB1-LP-001"
208/120VAC
3ø, 4W
225A BUS
150A MCB
54 POLE
10,000 A.I.C

SUB1-CHGR1-P
SUB1-CHGR2-P
SUB1-PDP2-F1

BATTERY CHARGING SYSTEM ASSEMBLY "SUB1-CHGR-001"
INPUT: 480VAC, 1ø
OUTPUT: 130VDC, 50A
RATED 14kAIC (DC)

BATTERY CHARGING SYSTEM ASSEMBLY "SUB1-CHGR-002"
INPUT: 480VAC, 1ø
OUTPUT: 130VDC, 50A
RATED 14kAIC (DC)

SUB1-PDB1-P1
SUB1-PDB1-P2

"SUB1-PDB-001"
DC POWER DISTRIBUTION BUS
130VDC, 800A, 2-WIRE, 14kAIC (DC)

CB 2P-800A "DS-DSBAT"

SUB1-BATT1-P1
SUB1-BATT1-P2
SUB1-BATT1-P3

SUB1-PDPDC1-P1
SUB1-PDPDC1-P2
SUB1-PDPDC1-P3

BATTERY RACKS CONNECTED IN SERIES FOR A TOTAL VOLTAGE OF 132VDC.

BATTERY RACK "SUB1-BATT-001"

BATTERY RACK 1
30 CELLS AT 2.2VDC
66VDC TOTAL

BATTERY RACK 2
30 CELLS AT 2.2VDC
66VDC TOTAL

"SUB1-PDP-DC01"
130VDC
2-WIRE
800A BUS
800A MCB
40 POLE
14 kA.I.C (DC)

PDPDC1-32

DC-AC INVERTER SYSTEM ASSMEBLY "SUB1-INV-001"
INPUT: 130VDC
OUTPUT: 240/120VAC, 1ø, 10kVA

N.O.
N.C.

"SUB1-PDP-002"
240/120V, 225A, 1ø, 3W, 10,000 A.I.C.

CB 2P-150A "BKR-PDP2"
CB 2P-150A "BKR-INV1"
CB 2P-150A "BKR-ATS2"

SUB1-INV1-P

SUB1-ATS2-NF1

AUTOMATIC TRANSFER AND BYPASS ISOLATION SWITCH "SUB1-ATS-002"
2P-260A
1ø, 3W, 240/120V
10,000A W.C.R.

NORM
EMERG.
NORM BP
EMERG. BP

SUB1-ATS2-EF1

SUB1-LP2-P

"SUB1-LP-002"
240/120VAC
1ø, 3W
225A BUS
150A MCB
30 POLE
10,000 A.I.C

GENERAL NOTES:

1. THIS DRAWING IS INTENDED TO REPRESENT AN OVERVIEW OF THE PROPOSED POWER DISTRIBUTION SYSTEM. ONLY MAJOR ELECTRICAL EQUIPMENT HAS BEEN SHOWN FOR CLARITY.

BAR LENGTH ON ORIGINAL DRAWING EQUALS ONE INCH, ADJUST SCALE ACCORDINGLY.

REUSE OF DOCUMENTS

This document, and the designs incorporated herein, is an instrument of professional service that has been developed, designed and prepared by Harutunian Engineering, Inc., and is not to be used, in whole or in part, for any other project without giving written notice to Harutunian Engineering, Inc.

NO.	DATE:	DESCRIPTION

HARUTUNIAN ENGINEERING INCORPORATED
TEXAS FIRM REGISTRATION NUMBER F-2408
ENGINEERING AND ENVIRONMENTAL CONSULTANTS
8100 CROSS PARK DRIVE
AUSTIN, TEXAS 78754

STATE OF TEXAS
SHANT HARUTUNIAN
87735
REGISTERED
PROFESSIONAL ENGINEER
10/7/2019

DESIGNED BY:	HEI
CHECKED BY:	HEI
APPROVED BY:	HEI
SUBMITTAL DATE:	OCTOBER 2019
SCALE:	AS SHOWN

SOUTH AUSTIN REGIONAL WASTEWATER TREATMENT PLANT
ELECTRICAL SUBSTATION NO. 1 REPLACEMENT PROJECT
CIP I.D.# 3333.032

SUBSTATION NO. 1 OVERALL ONE-LINE DIAGRAM - PROPOSED (SHEET 4 OF 4)

PROJECT NO: 2014-300 | SHT. 606 OF 866 | DWG NO. SUB1-E-005

12470V SWITCHGEAR "SUB1-SWGR-100"

12470V, 2000A, 3ø, 3W, 1000MVA

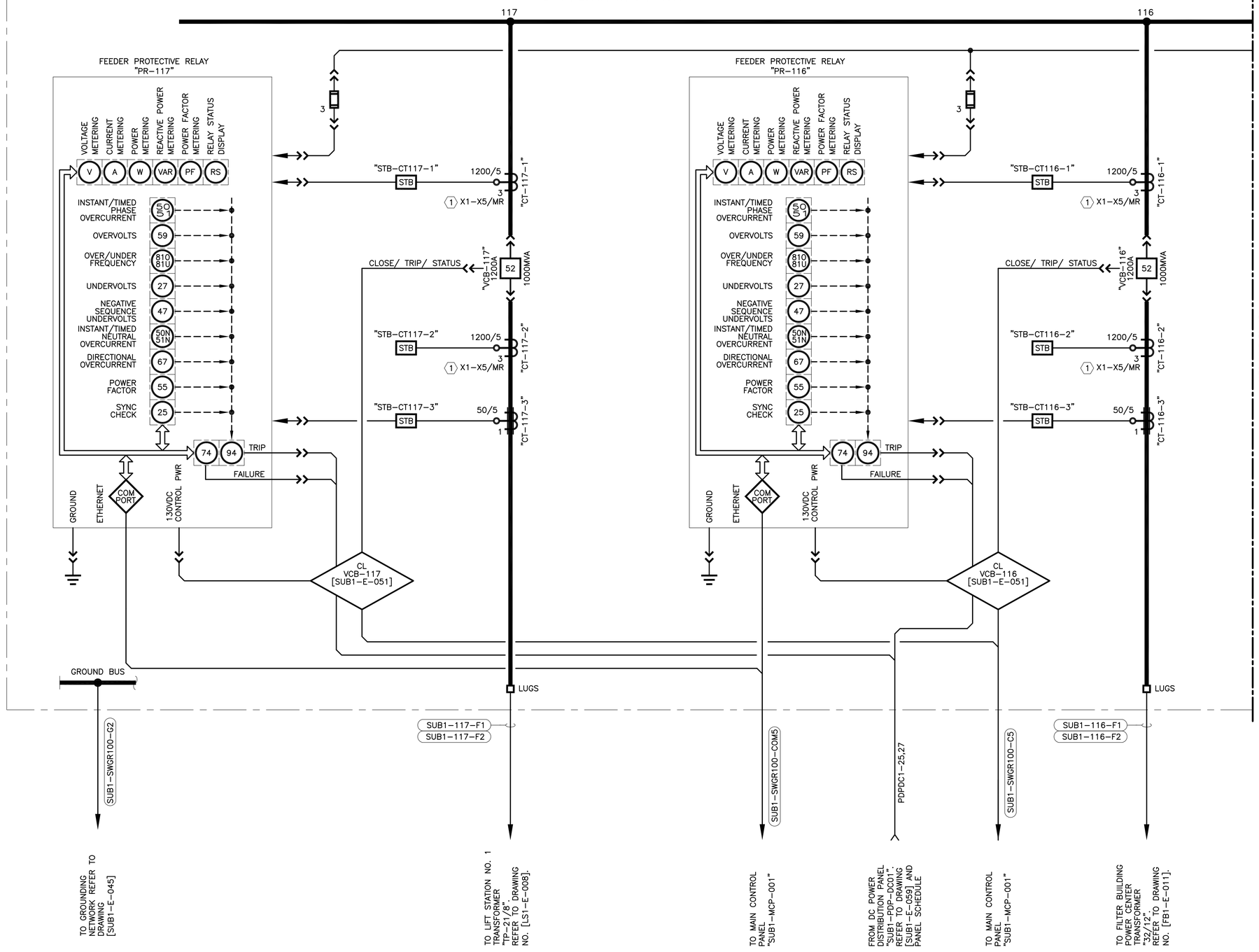

MATCHLINE "A-A"
SEE DRAWING NO. [SUB1-E-007]

KEY NOTES:

(1) 1200/5 MULTI-RATIO, WINDOW TYPE CURRENT TRANSFORMER. SET INITIAL TAPS AT STB ACCORDING TO THE "CURRENT TRANSFORMER RATIO SETTINGS TABLE" SHOWN ON THIS DRAWING.

MULTI-RATIO CURRENT TRANSFORMER INITIAL RATIO SETTINGS TABLE

TAG	RATIO SETTING	TAG	RATIO SETTING
"CT-SWGR100-1"	2000/5	"CT-SWGR200-1"	2000/5
"CT-SWGR100-2"	2000/5	"CT-SWGR200-2"	2000/5
"CT-103-1"	100/5	"CT-203-1"	100/5
"CT-103-2"	100/5	"CT-203-2"	100/5
"CT-105-1"	1200/5	"CT-205-1"	1200/5
"CT-105-2"	1200/5	"CT-205-2"	1200/5
"CT-106-1"	1200/5	"CT-206-1"	1200/5
"CT-106-2"	1200/5	"CT-206-2"	1200/5
"CT-107-1"	800/5	"CT-207-1"	800/5
"CT-107-2"	800/5	"CT-207-2"	800/5
"CT-108-1"	300/5	"CT-208-1"	300/5
"CT-108-2"	300/5	"CT-208-2"	300/5
"CT-109-1"	300/5	"CT-209-1"	300/5
"CT-109-2"	300/5	"CT-209-2"	300/5
"CT-110-1"	300/5	"CT-210-1"	300/5
"CT-110-2"	300/5	"CT-210-2"	300/5
"CT-111-1"	300/5	"CT-211-1"	300/5
"CT-111-2"	300/5	"CT-211-2"	300/5
"CT-112-1"	300/5	"CT-212-1"	300/5
"CT-112-2"	300/5	"CT-212-2"	300/5
"CT-113-1"	200/5	"CT-213-1"	200/5
"CT-113-2"	200/5	"CT-213-2"	200/5
"CT-114-1"	500/5	"CT-214-1"	500/5
"CT-114-2"	500/5	"CT-214-2"	500/5
"CT-115-1"	200/5	"CT-215-1"	200/5
"CT-115-2"	200/5	"CT-215-2"	200/5
"CT-116-1"	300/5	"CT-216-1"	300/5
"CT-116-2"	300/5	"CT-216-2"	300/5
"CT-117-1"	300/5	"CT-217-1"	300/5
"CT-117-2"	300/5	"CT-217-2"	300/5

BAR LENGTH ON ORIGINAL DRAWING EQUALS ONE INCH, ADJUST SCALE ACCORDINGLY.

REUSE OF DOCUMENTS

This document, and the designs incorporated herein, is an instrument of professional service that has been developed, designed and prepared by Harutunian Engineering, Inc., and is not to be used, in whole or in part, for any other project without giving written notice to Harutunian Engineering, Inc.

NO.	DATE:	DESCRIPTION

HARUTUNIAN ENGINEERING INCORPORATED

TEXAS FIRM REGISTRATION NUMBER F-2408

ENGINEERING AND ENVIRONMENTAL CONSULTANTS
8100 CROSS PARK DRIVE
AUSTIN, TEXAS 78754

STATE OF TEXAS
SHANT HARUTUNIAN
87735
REGISTERED
PROFESSIONAL ENGINEER
10/7/2019

DESIGNED BY:	HEI
CHECKED BY:	HEI
APPROVED BY:	HEI
SUBMITTAL DATE:	OCTOBER 2019
SCALE:	AS SHOWN

SOUTH AUSTIN REGIONAL WASTEWATER TREATMENT PLANT
ELECTRICAL SUBSTATION NO. 1 REPLACEMENT PROJECT
CIP I.D.# 3333.032

SUBSTATION NO. 1 "SUB1-SWGR-100" DETAILED ONE-LINE DIAGRAM - PROPOSED (SHEET 1 OF 8)

PROJECT NO: 2014-300 | SHT. 607 OF 866 | DWG NO. SUB1-E-006

12470V SWITCHGEAR "SUB1-SWGR-100"

12470V, 2000A, 3ø, 3W, 1000MVA

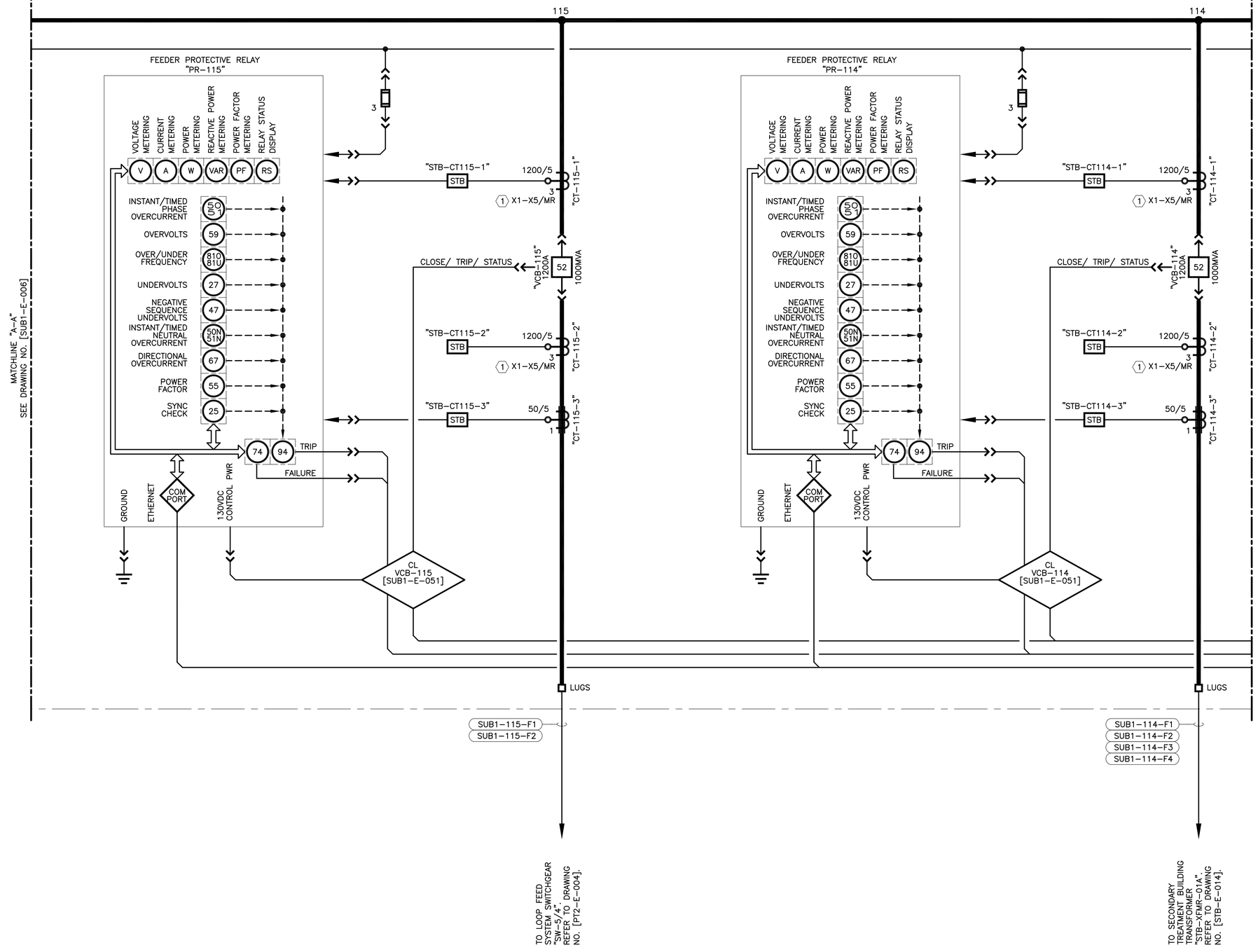

KEY NOTES:

(1) 1200/5 MULTI-RATIO, WINDOW TYPE CURRENT TRANSFORMER. SET INITIAL TAPS AT STB ACCORDING TO THE "CURRENT TRANSFORMER RATIO SETTINGS TABLE" SHOWN ON DRAWING NO. [SUB1-E-006].

BAR LENGTH ON ORIGINAL DRAWING EQUALS ONE INCH, ADJUST SCALE ACCORDINGLY.

REUSE OF DOCUMENTS

This document, and the designs incorporated herein, is an instrument of professional service that has been developed, designed and prepared by Harutunian Engineering, Inc., and is not to be used, in whole or in part, for any other project without giving written notice to Harutunian Engineering, Inc.

NO.	DATE:	DESCRIPTION

HARUTUNIAN ENGINEERING INCORPORATED

TEXAS FIRM REGISTRATION NUMBER F-2408

ENGINEERING AND ENVIRONMENTAL CONSULTANTS
8100 CROSS PARK DRIVE
AUSTIN, TEXAS 78754

STATE OF TEXAS
SHANT HARUTUNIAN
87735
REGISTERED
PROFESSIONAL ENGINEER
10/7/2019

DESIGNED BY:	HEI
CHECKED BY:	HEI
APPROVED BY:	HEI
SUBMITTAL DATE:	OCTOBER 2019
SCALE:	AS SHOWN

SOUTH AUSTIN REGIONAL WASTEWATER TREATMENT PLANT
ELECTRICAL SUBSTATION NO. 1 REPLACEMENT PROJECT
CIP I.D.# 3333.032

SUBSTATION NO. 1 "SUB1-SWGR-100"
DETAILED ONE-LINE DIAGRAM -
PROPOSED (SHEET 2 OF 8)

PROJECT NO: 2014-300 | SHT. 608 OF 866 | DWG NO. SUB1-E-007

12470V SWITCHGEAR "SUB1-SWGR-100"

12470V, 2000A, 3ø, 3W, 1000MVA

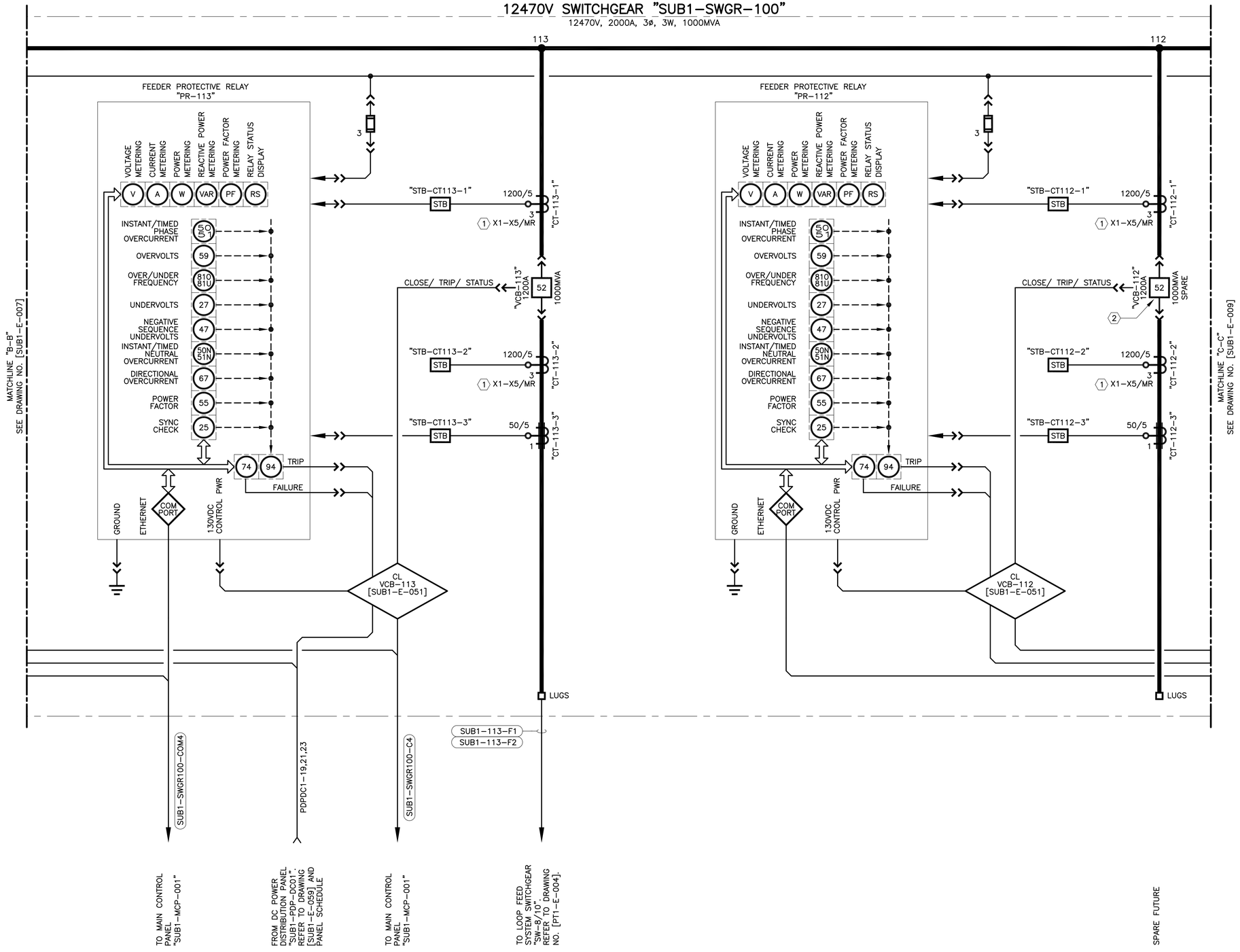

KEY NOTES:

1. 1200/5 MULTI-RATIO, WINDOW TYPE CURRENT TRANSFORMER. SET INITIAL TAPS AT STB ACCORDING TO THE "CURRENT TRANSFORMER RATIO SETTINGS TABLE" SHOWN ON DRAWING NO. [SUB1-E-006].
2. CIRCUIT BREAKER SHALL BE INSTALLED AS SPARE.

BAR LENGTH ON ORIGINAL DRAWING EQUALS ONE INCH, ADJUST SCALE ACCORDINGLY.

REUSE OF DOCUMENTS

This document, and the designs incorporated herein, is an instrument of professional service that has been developed, designed and prepared by Harutunian Engineering, Inc., and is not to be used, in whole or in part, for any other project without giving written notice to Harutunian Engineering, Inc.

NO.	DATE:	DESCRIPTION

HARUTUNIAN ENGINEERING INCORPORATED

TEXAS FIRM REGISTRATION NUMBER F-2408

ENGINEERING AND ENVIRONMENTAL CONSULTANTS
8100 CROSS PARK DRIVE
AUSTIN, TEXAS 78754

STATE OF TEXAS
SHANT HARUTUNIAN
87735
REGISTERED
PROFESSIONAL ENGINEER
10/7/2019

DESIGNED BY:	HEI
CHECKED BY:	HEI
APPROVED BY:	HEI
SUBMITTAL DATE:	OCTOBER 2019
SCALE:	AS SHOWN

SOUTH AUSTIN REGIONAL WASTEWATER TREATMENT PLANT
ELECTRICAL SUBSTATION NO. 1 REPLACEMENT PROJECT
CIP I.D.# 3333.032

SUBSTATION NO. 1 "SUB1-SWGR-100" DETAILED ONE-LINE DIAGRAM - PROPOSED (SHEET 3 OF 8)

PROJECT NO: 2014-300 | SHT. 609 OF 866 | DWG NO. SUB1-E-008

12470V SWITCHGEAR "SUB1-SWGR-100"

12470V, 2000A, 3ø, 3W, 1000MVA

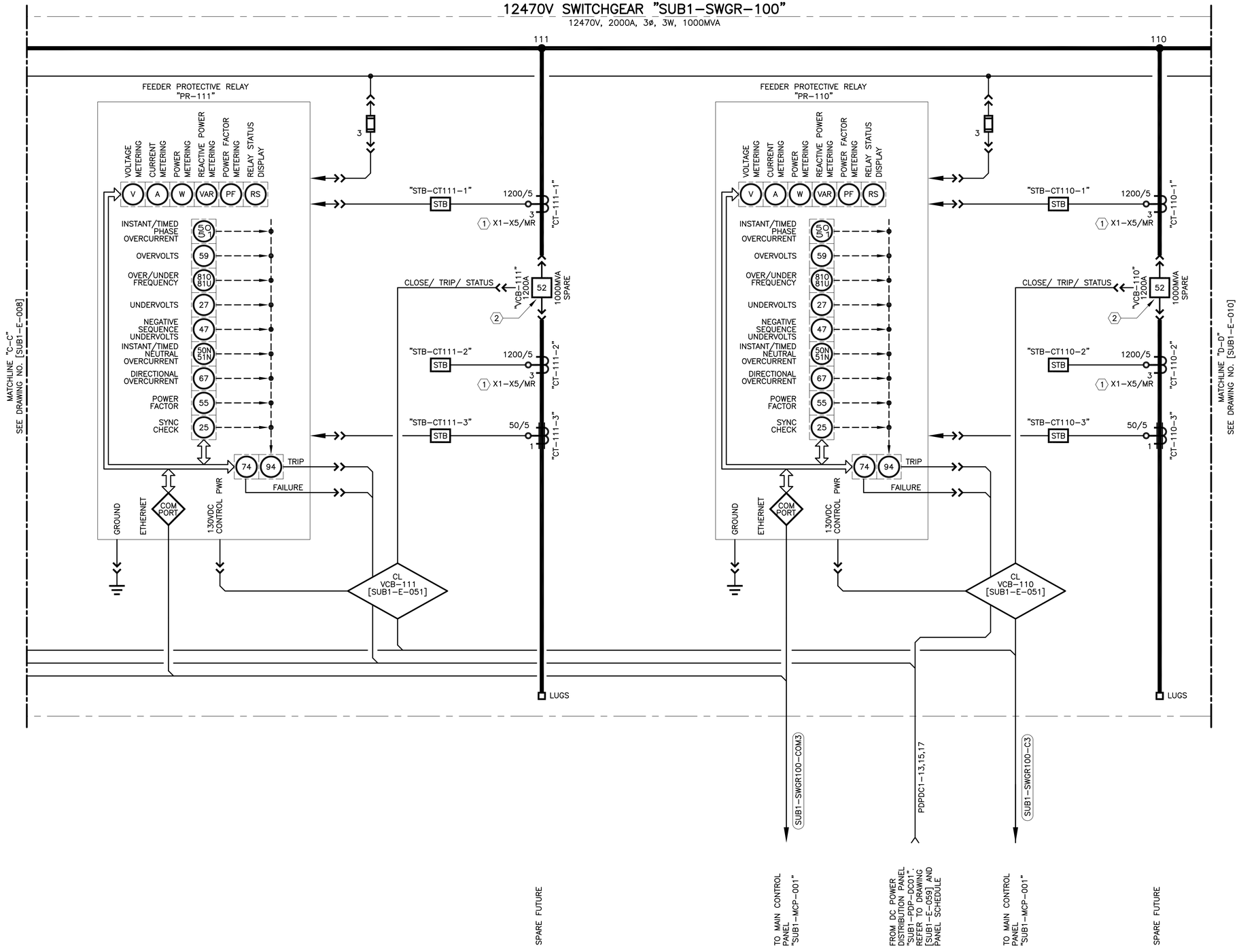

KEY NOTES:

1. 1200/5 MULTI-RATIO, WINDOW TYPE CURRENT TRANSFORMER. SET INITIAL TAPS AT STB ACCORDING TO THE "CURRENT TRANSFORMER RATIO SETTINGS TABLE" SHOWN ON DRAWING NO. [SUB1-E-006].
2. CIRCUIT BREAKER SHALL BE INSTALLED AS SPARE.

BAR LENGTH ON ORIGINAL DRAWING EQUALS ONE INCH, ADJUST SCALE ACCORDINGLY.

REUSE OF DOCUMENTS

This document, and the designs incorporated herein, is an instrument of professional service that has been developed, designed and prepared by Harutunian Engineering, Inc., and is not to be used, in whole or in part, for any other project without giving written notice to Harutunian Engineering, Inc.

NO.	DATE:	DESCRIPTION

HARUTUNIAN ENGINEERING INCORPORATED

TEXAS FIRM REGISTRATION NUMBER F-2408

ENGINEERING AND ENVIRONMENTAL CONSULTANTS
8100 CROSS PARK DRIVE
AUSTIN, TEXAS 78754

STATE OF TEXAS
SHANT HARUTUNIAN
87735
REGISTERED
PROFESSIONAL ENGINEER
10/7/2019

DESIGNED BY:	HEI
CHECKED BY:	HEI
APPROVED BY:	HEI
SUBMITTAL DATE:	OCTOBER 2019
SCALE:	AS SHOWN

SOUTH AUSTIN REGIONAL WASTEWATER TREATMENT PLANT
ELECTRICAL SUBSTATION NO. 1 REPLACEMENT PROJECT
CIP I.D.# 3333.032

SUBSTATION NO. 1 "SUB1-SWGR-100" DETAILED ONE-LINE DIAGRAM - PROPOSED (SHEET 4 OF 8)

PROJECT NO: 2014-300 | SHT. 610 OF 866 | DWG NO. SUB1-E-009

12470V SWITCHGEAR "SUB1-SWGR-100"

12470V, 2000A, 3ø, 3W, 1000MVA

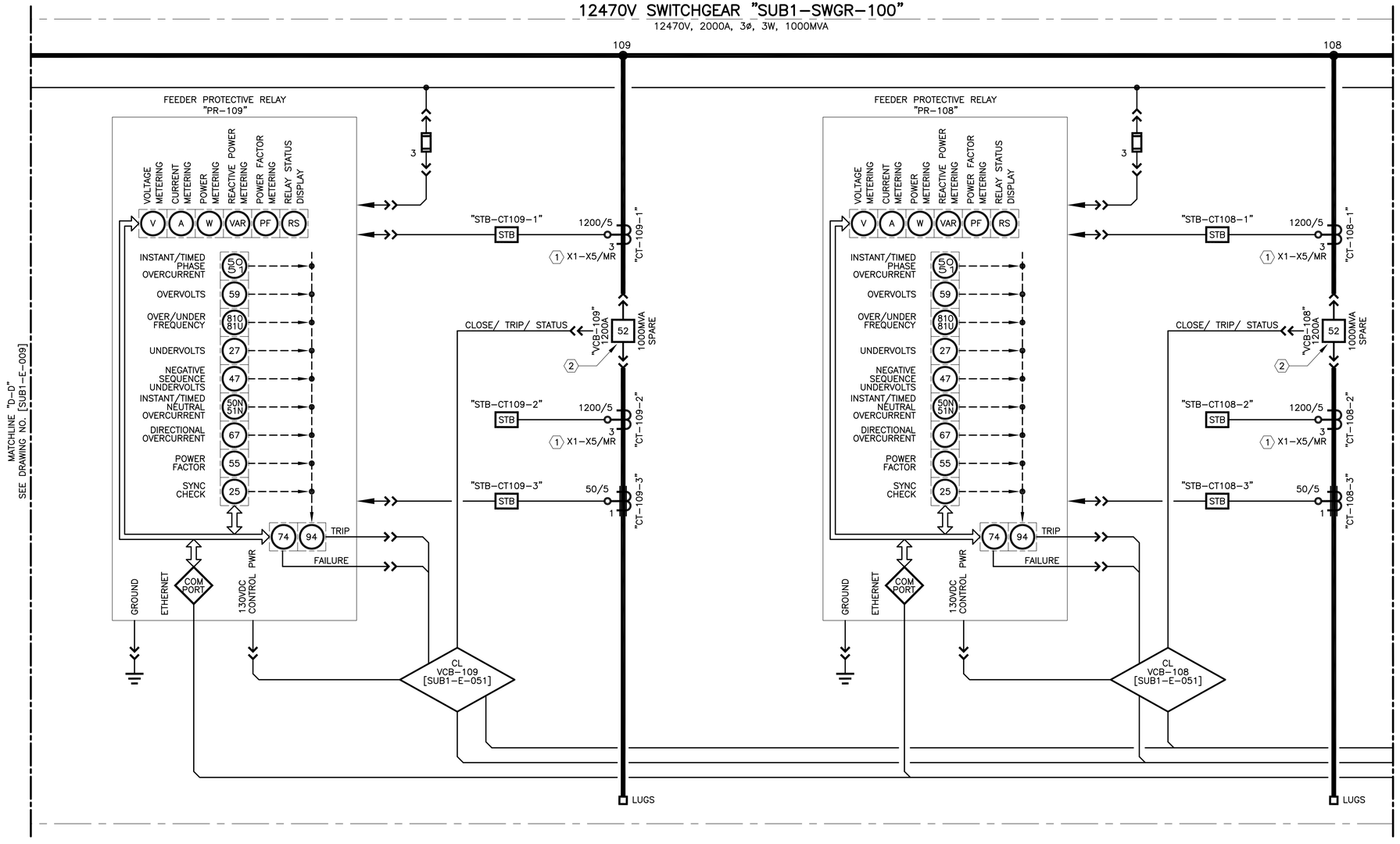

KEY NOTES:

1. 1200/5 MULTI-RATIO, WINDOW TYPE CURRENT TRANSFORMER. SET INITIAL TAPS AT STB ACCORDING TO THE "CURRENT TRANSFORMER RATIO SETTINGS TABLE" SHOWN ON DRAWING NO. [SUB1-E-006].
2. CIRCUIT BREAKER SHALL BE INSTALLED AS SPARE.

BAR LENGTH ON ORIGINAL DRAWING EQUALS ONE INCH, ADJUST SCALE ACCORDINGLY.

REUSE OF DOCUMENTS

This document, and the designs incorporated herein, is an instrument of professional service that has been developed, designed and prepared by Harutunian Engineering, Inc., and is not to be used, in whole or in part, for any other project without giving written notice to Harutunian Engineering, Inc.

NO.	DATE:	DESCRIPTION

HARUTUNIAN ENGINEERING INCORPORATED

TEXAS FIRM REGISTRATION NUMBER F-2408

ENGINEERING AND ENVIRONMENTAL CONSULTANTS
8100 CROSS PARK DRIVE
AUSTIN, TEXAS 78754

STATE OF TEXAS
SHANT HARUTUNIAN
87735
REGISTERED
PROFESSIONAL ENGINEER
10/7/2019

DESIGNED BY:	HEI
CHECKED BY:	HEI
APPROVED BY:	HEI
SUBMITTAL DATE:	OCTOBER 2019
SCALE:	AS SHOWN

SOUTH AUSTIN REGIONAL WASTEWATER TREATMENT PLANT
ELECTRICAL SUBSTATION NO. 1 REPLACEMENT PROJECT
CIP I.D.# 3333.032

SUBSTATION NO. 1 "SUB1-SWGR-100"
DETAILED ONE-LINE DIAGRAM -
PROPOSED (SHEET 5 OF 8)

PROJECT NO: 2014-300 | SHT. 611 OF 866 | DWG NO. SUB1-E-010

12470V SWITCHGEAR "SUB1-SWGR-100"

12470V, 2000A, 3ø, 3W, 1000MVA

KEY NOTES:

1. 2000/5 MULTI-RATIO, WINDOW TYPE CURRENT TRANSFORMER. SET INITIAL TAPS AT STB ACCORDING TO THE "CURRENT TRANSFORMER RATIO SETTINGS TABLE" SHOWN ON DRAWING NO. [SUB1-E-006].
2. 1200/5 MULTI-RATIO, WINDOW TYPE CURRENT TRANSFORMER. SET INITIAL TAPS AT STB ACCORDING TO THE "CURRENT TRANSFORMER RATIO SETTINGS TABLE" SHOWN ON DRAWING NO. [SUB1-E-006].
3. COORDINATE SPACE HEATER REQUIREMENTS WITH THE MANUFACTURER. INCREASE CONDUIT/WIRE SIZE AND NUMBER OF CIRCUITS AS NECESSARY TO FACILITATE SERVICE TO THE SPACE HEATER CIRCUITRY AT NO ADDITIONAL COST TO THE OWNER.

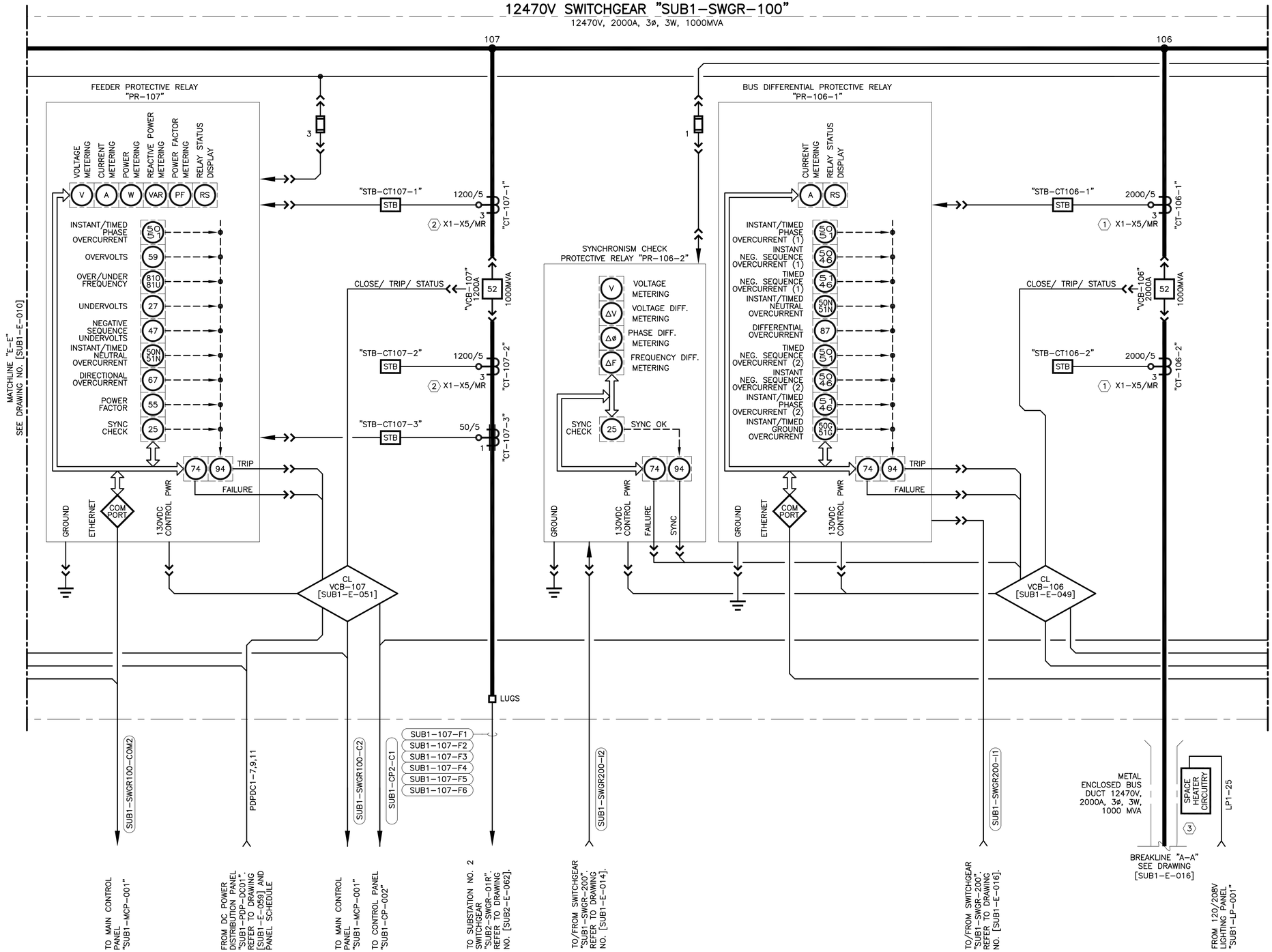

BAR LENGTH ON ORIGINAL DRAWING EQUALS ONE INCH, ADJUST SCALE ACCORDINGLY.

REUSE OF DOCUMENTS

This document, and the designs incorporated herein, is an instrument of professional service that has been developed, designed and prepared by Harutunian Engineering, Inc., and is not to be used, in whole or in part, for any other project without giving written notice to Harutunian Engineering, Inc.

NO.	DATE:	DESCRIPTION

HARUTUNIAN ENGINEERING INCORPORATED

TEXAS FIRM REGISTRATION NUMBER F-2408

ENGINEERING AND ENVIRONMENTAL CONSULTANTS
8100 CROSS PARK DRIVE
AUSTIN, TEXAS 78754

SHANT HARUTUNIAN 87735 REGISTERED PROFESSIONAL ENGINEER STATE OF TEXAS
10/7/2019

DESIGNED BY:	HEI
CHECKED BY:	HEI
APPROVED BY:	HEI
SUBMITTAL DATE:	OCTOBER 2019
SCALE:	AS SHOWN

SOUTH AUSTIN REGIONAL WASTEWATER TREATMENT PLANT
ELECTRICAL SUBSTATION NO. 1 REPLACEMENT PROJECT
CIP I.D.# 3333.032

SUBSTATION NO. 1 "SUB1-SWGR-100" DETAILED ONE-LINE DIAGRAM - PROPOSED (SHEET 6 OF 8)

PROJECT NO: 2014-300 | SHT. 612 OF 866 | DWG NO. SUB1-E-011

KEY NOTES:

(1) 2000/5 MULTI-RATIO, WINDOW TYPE CURRENT TRANSFORMER. SET INITIAL TAPS AT STB ACCORDING TO THE "CURRENT TRANSFORMER RATIO SETTINGS TABLE" SHOWN ON DRAWING NO. [SUB1-E-006].

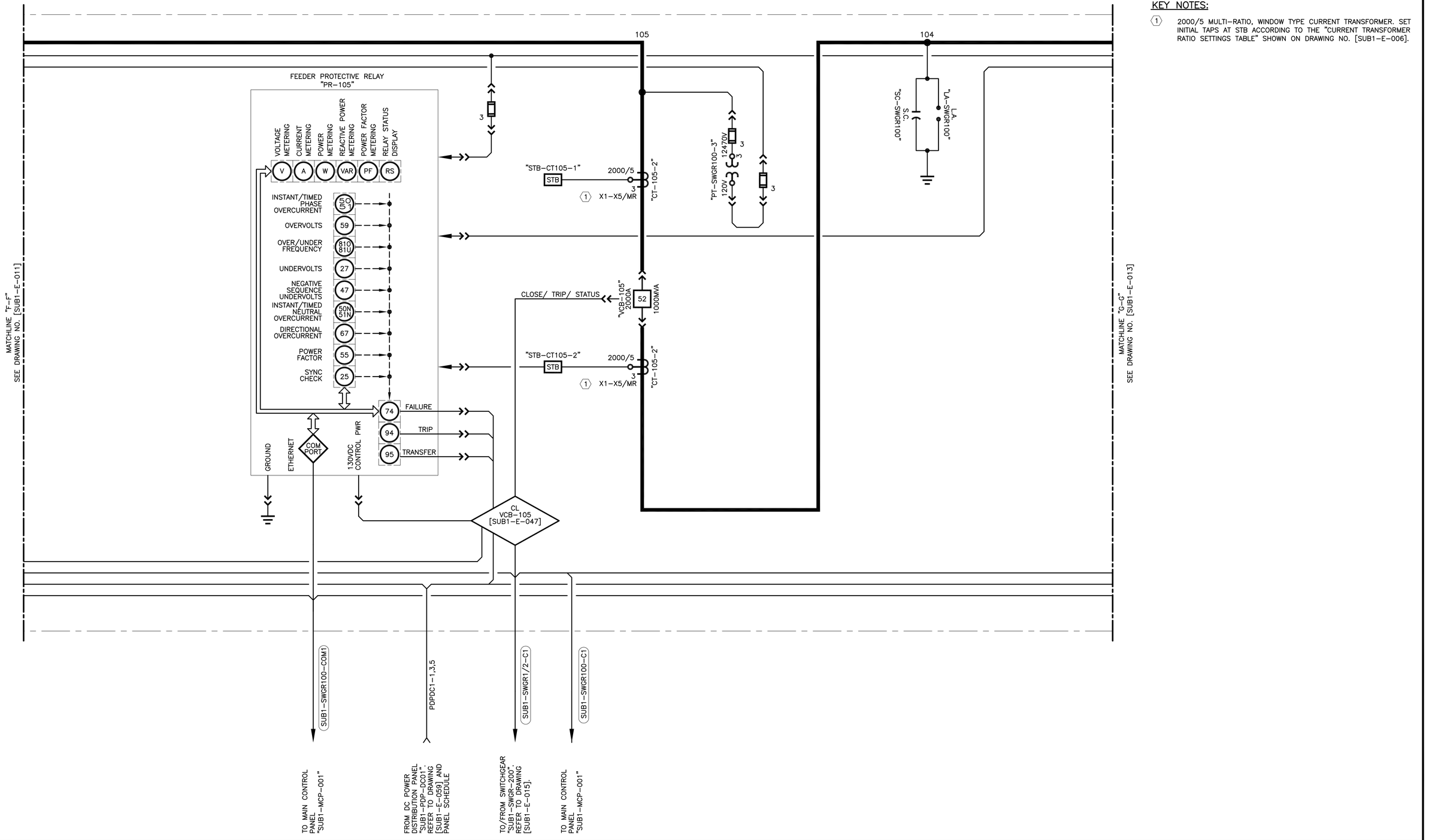

BAR LENGTH ON ORIGINAL DRAWING EQUALS ONE INCH, ADJUST SCALE ACCORDINGLY.

REUSE OF DOCUMENTS

This document, and the designs incorporated herein, is an instrument of professional service that has been developed, designed and prepared by Harutunian Engineering, Inc., and is not to be used, in whole or in part, for any other project without giving written notice to Harutunian Engineering, Inc.

NO.	DATE:	DESCRIPTION

HARUTUNIAN ENGINEERING INCORPORATED
TEXAS FIRM REGISTRATION NUMBER F-2408
ENGINEERING AND ENVIRONMENTAL CONSULTANTS
8100 CROSS PARK DRIVE
AUSTIN, TEXAS 78754

STATE OF TEXAS
SHANT HARUTUNIAN
87735
REGISTERED
PROFESSIONAL ENGINEER
10/7/2019

DESIGNED BY:	HEI
CHECKED BY:	HEI
APPROVED BY:	HEI
SUBMITTAL DATE:	OCTOBER 2019
SCALE:	AS SHOWN

SOUTH AUSTIN REGIONAL WASTEWATER TREATMENT PLANT
ELECTRICAL SUBSTATION NO. 1 REPLACEMENT PROJECT
CIP I.D.# 3333.032

SUBSTATION NO. 1 "SUB1-SWGR-100" DETAILED ONE-LINE DIAGRAM - PROPOSED (SHEET 7 OF 8)

PROJECT NO: 2014-300 | SHT. 613 OF 866 | DWG NO. SUB1-E-012

12470V SWITCHGEAR "SUB1–SWGR–100"

12470V, 2000A, 3ø, 3W, 1000MVA

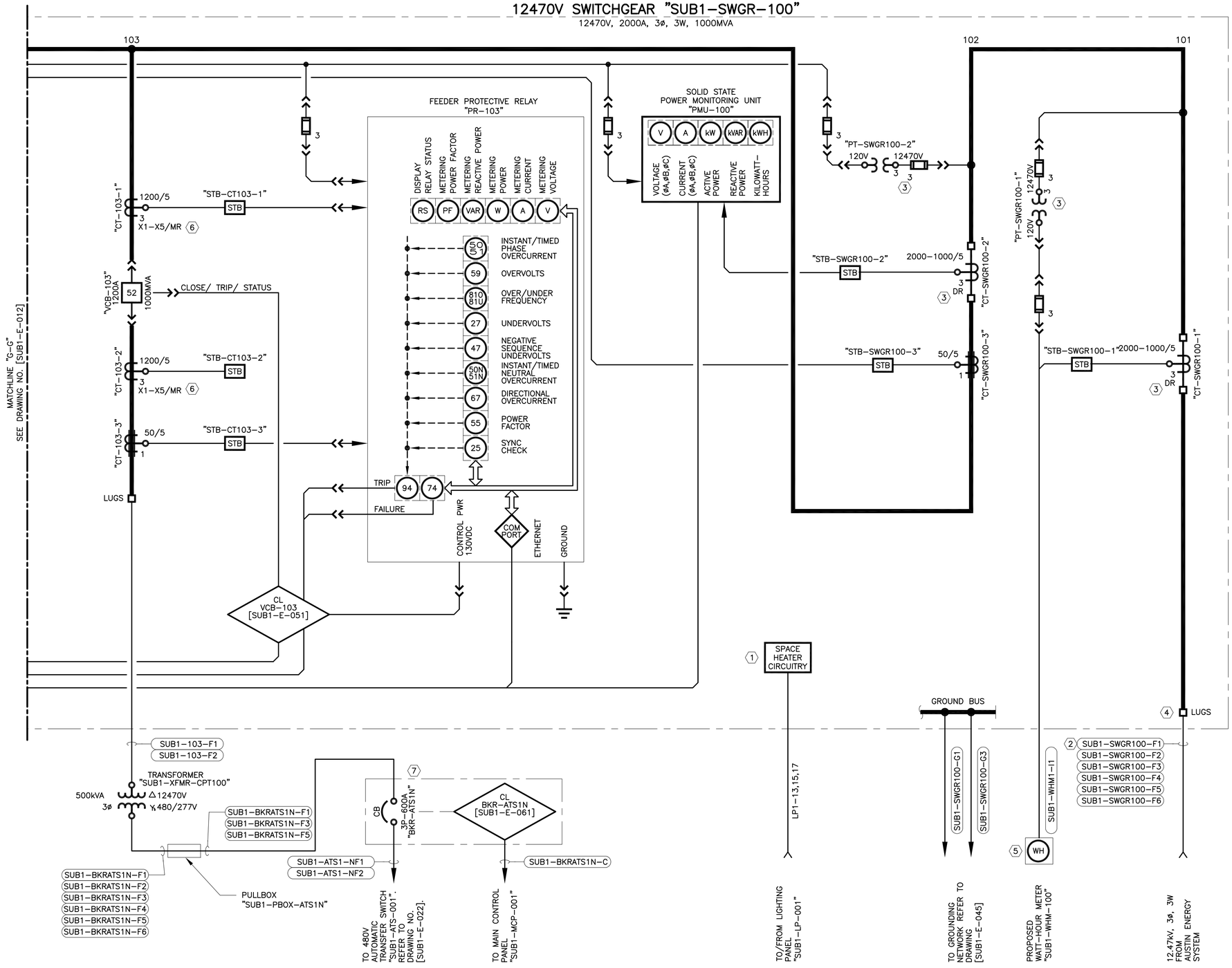

KEY NOTES:

1. COORDINATE SPACE HEATER REQUIREMENTS WITH THE MANUFACTURER. INCREASE CONDUIT/WIRE SIZE AND NUMBER OF CIRCUITS AS NECESSARY TO FACILITATE SERVICE TO THE SPACE HEATER CIRCUITRY AT NO ADDITIONAL COST TO THE OWNER.
2. FURNISH AND INSTALL RACEWAY SYSTEM. AUSTIN ENERGY SHALL FURNISH AND INSTALL FEEDER CABLES. COORDINATE WITH AUSTIN ENERGY.
3. PROPOSED MAIN UTILITY SERVICE METERING TRANSFORMERS. FURNISH AND INSTALL METERING TRANSFORMERS PER THE REQUIREMENTS OF AUSTIN ENERGY. COORDINATE WITH AUSTIN ENERGY AND MAKE ALL FINAL CONNECTIONS.
4. FURNISH AND INSTALL LUGS TO FACILITATE TERMINATION OF THE PROPOSED AND FUTURE AUSTIN ENERGY CABLES. COORDINATE WITH AUSTIN ENERGY.
5. FURNISH AND INSTALL EMPTY METERING CAN/ENCLOSURE PER THE REQUIREMENTS OF AUSTIN ENERGY. AUSTIN ENERGY SHALL FURNISH AND INSTALL THE WATT–HOUR METER AND THE INTERCONNECT WIRING BETWEEN THE WATT–HOUR METER AND THE CT/PT (LOCATED INSIDE OF PROPOSED SWITCHGEAR). COORDINATE WITH AUSTIN ENERGY AND MAKE ALL FINAL CONNECTIONS.
6. 1200/5 MULTI–RATIO, WINDOW TYPE CURRENT TRANSFORMER. SET INITIAL TAPS AT STB ACCORDING TO THE "CURRENT TRANSFORMER RATIO SETTINGS TABLE" SHOWN ON DRAWING [SUB1–E–006].
7. FURNISH AND INSTALL ENCLOSED CIRCUIT BREAKER WITH SYMMETRICAL SHORT CIRCUIT INTERRUPTING RATING OF 42kA AT 480VAC AT MINIMUM.

BAR LENGTH ON ORIGINAL DRAWING EQUALS ONE INCH, ADJUST SCALE ACCORDINGLY.

REUSE OF DOCUMENTS

This document, and the designs incorporated herein, is an instrument of professional service that has been developed, designed and prepared by Harutunian Engineering, Inc., and is not to be used, in whole or in part, for any other project without giving written notice to Harutunian Engineering, Inc.

NO.	DATE:	DESCRIPTION

HARUTUNIAN ENGINEERING INCORPORATED

TEXAS FIRM REGISTRATION NUMBER F–2408

ENGINEERING AND ENVIRONMENTAL CONSULTANTS
8100 CROSS PARK DRIVE
AUSTIN, TEXAS 78754

STATE OF TEXAS
SHANT HARUTUNIAN
87735
REGISTERED
PROFESSIONAL ENGINEER
10/7/2019

DESIGNED BY:	HEI
CHECKED BY:	HEI
APPROVED BY:	HEI
SUBMITTAL DATE:	OCTOBER 2019
SCALE:	AS SHOWN

SOUTH AUSTIN REGIONAL WASTEWATER TREATMENT PLANT
ELECTRICAL SUBSTATION NO. 1 REPLACEMENT PROJECT
CIP I.D.# 3333.032

SUBSTATION NO. 1 "SUB1–SWGR–100" DETAILED ONE–LINE DIAGRAM – PROPOSED (SHEET 8 OF 8)

PROJECT NO: 2014–300 | SHT. 614 OF 866 | DWG NO. SUB1–E–013

12470V SWITCHGEAR "SUB1–SWGR–200"

12470V, 2000A, 3ø, 3W, 1000MVA

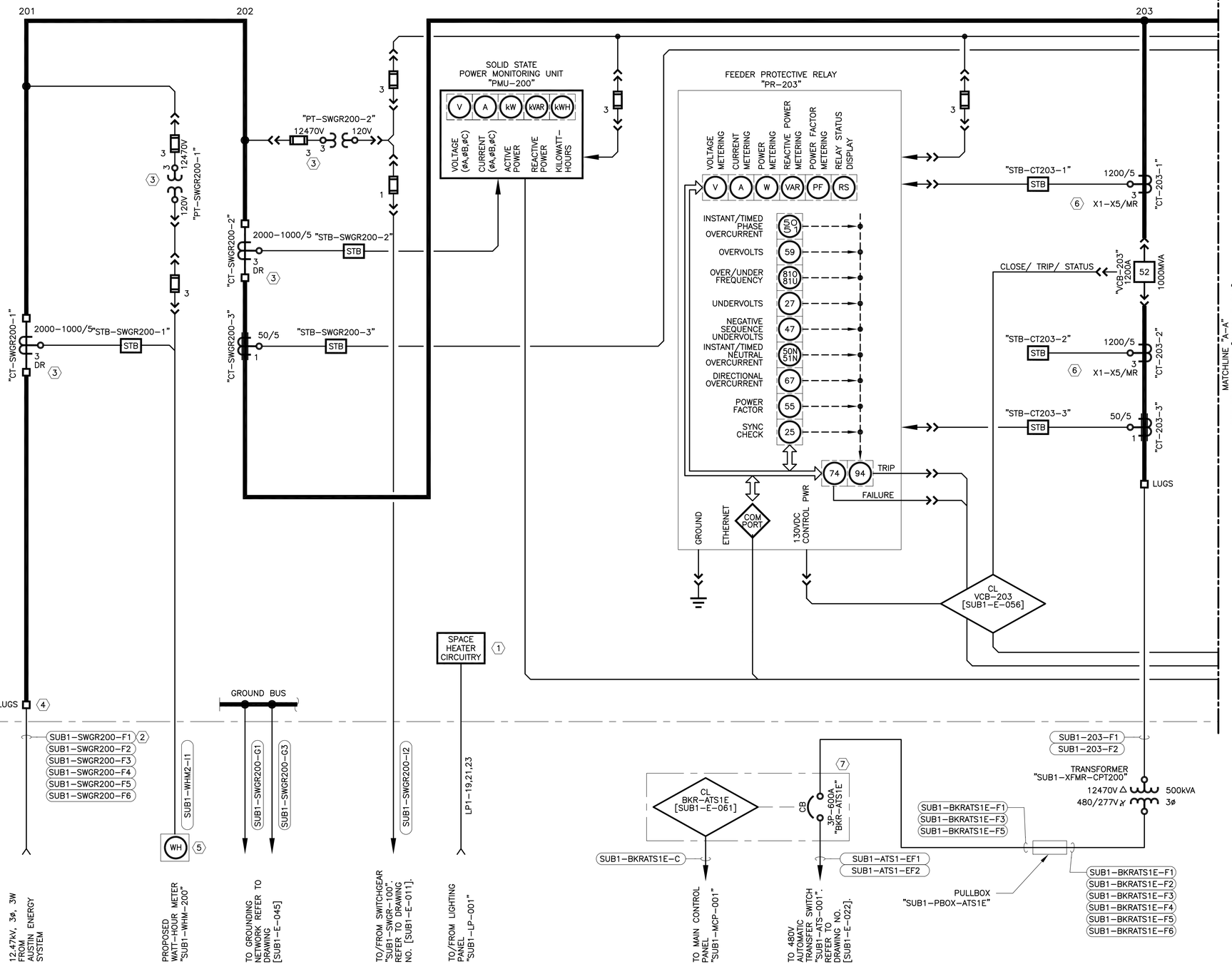

KEY NOTES:

1. COORDINATE SPACE HEATER REQUIREMENTS WITH THE MANUFACTURER. INCREASE CONDUIT/WIRE SIZE AND NUMBER OF CIRCUITS AS NECESSARY TO FACILITATE SERVICE TO THE SPACE HEATER CIRCUITRY AT NO ADDITIONAL COST TO THE OWNER.
2. FURNISH AND INSTALL RACEWAY SYSTEM. AUSTIN ENERGY SHALL FURNISH AND INSTALL FEEDER CABLES. COORDINATE WITH AUSTIN ENERGY.
3. PROPOSED MAIN UTILITY SERVICE METERING TRANSFORMERS. FURNISH AND INSTALL METERING TRANSFORMERS PER THE REQUIREMENTS OF AUSTIN ENERGY. COORDINATE WITH AUSTIN ENERGY AND MAKE ALL FINAL CONNECTIONS.
4. FURNISH AND INSTALL LUGS TO FACILITATE TERMINATION OF THE PROPOSED AND FUTURE AUSTIN ENERGY CABLES. COORDINATE WITH AUSTIN ENERGY.
5. FURNISH AND INSTALL EMPTY METERING CAN/ENCLOSURE PER THE REQUIREMENTS OF AUSTIN ENERGY. AUSTIN ENERGY SHALL FURNISH AND INSTALL THE WATT–HOUR METER AND THE INTERCONNECT WIRING BETWEEN THE WATT–HOUR METER AND THE CT/PT (LOCATED INSIDE OF PROPOSED SWITCHGEAR). COORDINATE WITH AUSTIN ENERGY AND MAKE ALL FINAL CONNECTIONS.
6. 1200/5 MULTI–RATIO, WINDOW TYPE CURRENT TRANSFORMER. SET INITIAL TAPS AT STB ACCORDING TO THE "CURRENT TRANSFORMER RATIO SETTINGS TABLE" SHOWN ON DRAWING [SUB1–E–006].
7. FURNISH AND INSTALL ENCLOSED CIRCUIT BREAKER WITH SYMMETRICAL SHORT CIRCUIT INTERRUPTING RATING OF 42kA AT 480VAC AT MINIMUM.

BAR LENGTH ON ORIGINAL DRAWING EQUALS ONE INCH, ADJUST SCALE ACCORDINGLY.

REUSE OF DOCUMENTS

This document, and the designs incorporated herein, is an instrument of professional service that has been developed, designed and prepared by Harutunian Engineering, Inc., and is not to be used, in whole or in part, for any other project without giving written notice to Harutunian Engineering, Inc.

NO.	DATE:	DESCRIPTION

HARUTUNIAN ENGINEERING INCORPORATED

TEXAS FIRM REGISTRATION NUMBER F–2408

ENGINEERING AND ENVIRONMENTAL CONSULTANTS
8100 CROSS PARK DRIVE
AUSTIN, TEXAS 78754

STATE OF TEXAS
SHANT HARUTUNIAN
87735
REGISTERED
PROFESSIONAL ENGINEER
10/7/2019

DESIGNED BY:	HEI
CHECKED BY:	HEI
APPROVED BY:	HEI
SUBMITTAL DATE:	OCTOBER 2019
SCALE:	AS SHOWN

SOUTH AUSTIN REGIONAL WASTEWATER TREATMENT PLANT
ELECTRICAL SUBSTATION NO. 1 REPLACEMENT PROJECT
CIP I.D.# 3333.032

SUBSTATION NO. 1 "SUB1–SWGR–200"
DETAILED ONE–LINE DIAGRAM –
PROPOSED (SHEET 1 OF 8)

PROJECT NO: 2014–300 | SHT. 615 OF 866 | DWG NO. SUB1–E–014

KEY NOTES:

(1) 2000/5 MULTI-RATIO, WINDOW TYPE CURRENT TRANSFORMER. SET INITIAL TAPS AT STB ACCORDING TO THE "CURRENT TRANSFORMER RATIO SETTINGS TABLE" SHOWN ON DRAWING NO. [SUB1-E-006].

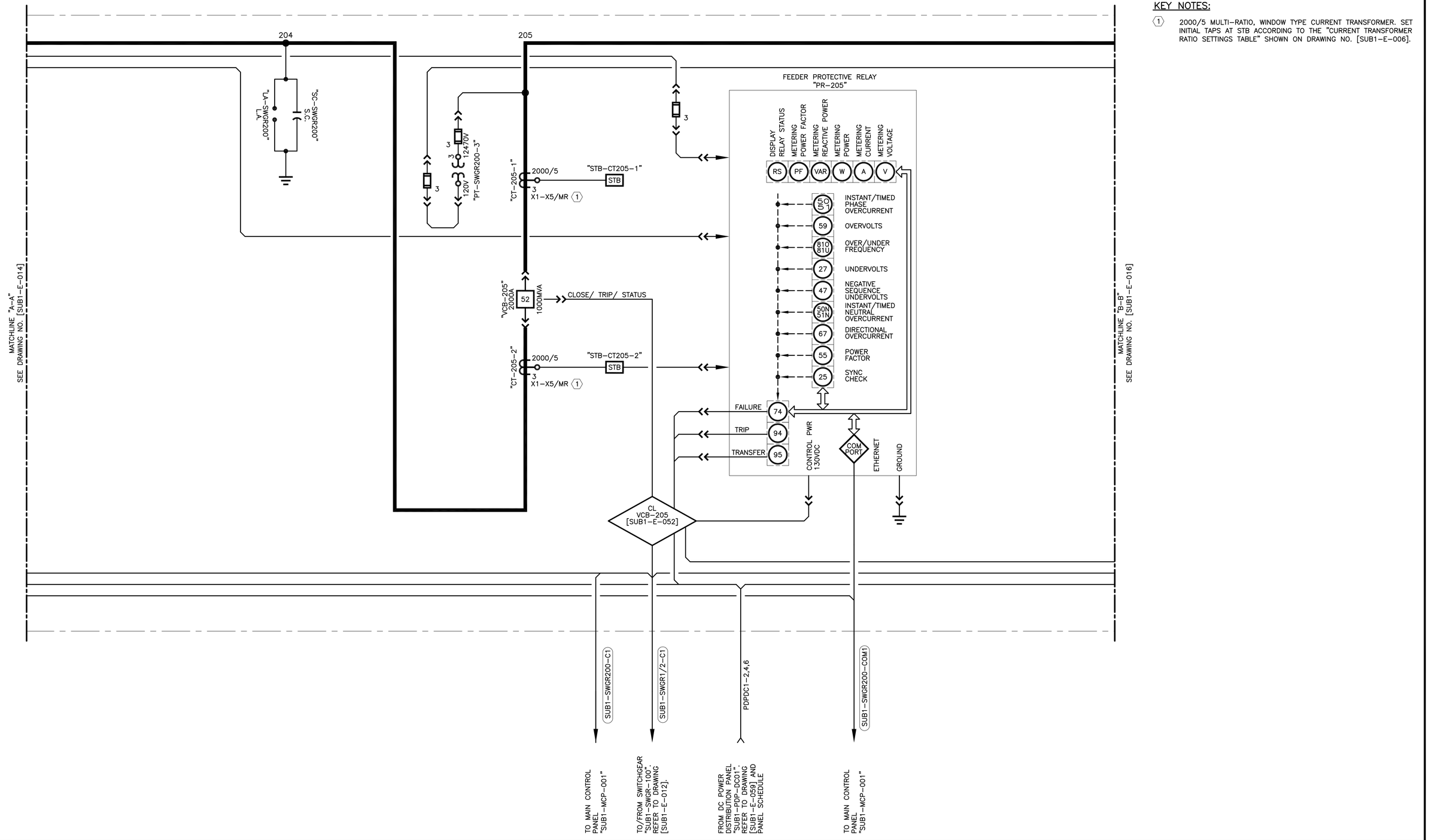

BAR LENGTH ON ORIGINAL DRAWING EQUALS ONE INCH, ADJUST SCALE ACCORDINGLY.

REUSE OF DOCUMENTS

This document, and the designs incorporated herein, is an instrument of professional service that has been developed, designed and prepared by Harutunian Engineering, Inc., and is not to be used, in whole or in part, for any other project without giving written notice to Harutunian Engineering, Inc.

NO.	DATE:	DESCRIPTION

HARUTUNIAN ENGINEERING INCORPORATED

TEXAS FIRM REGISTRATION NUMBER F-2408

ENGINEERING AND ENVIRONMENTAL CONSULTANTS
8100 CROSS PARK DRIVE
AUSTIN, TEXAS 78754

STATE OF TEXAS
SHANT HARUTUNIAN
87735
REGISTERED
PROFESSIONAL ENGINEER
10/7/2019

DESIGNED BY:	HEI
CHECKED BY:	HEI
APPROVED BY:	HEI
SUBMITTAL DATE:	OCTOBER 2019
SCALE:	AS SHOWN

SOUTH AUSTIN REGIONAL WASTEWATER TREATMENT PLANT
ELECTRICAL SUBSTATION NO. 1 REPLACEMENT PROJECT
CIP I.D.# 3333.032

SUBSTATION NO. 1 "SUB1-SWGR-200" DETAILED ONE-LINE DIAGRAM - PROPOSED (SHEET 2 OF 8)

PROJECT NO: 2014-300 | SHT. 616 OF 866 | DWG NO. SUB1-E-015

12470V SWITCHGEAR "SUB1-SWGR-200"

12470V, 2000A, 3ø, 3W, 1000MVA

206

207

MATCHLINE "B-B"
SEE DRAWING NO. [SUB1-E-015]

MATCHLINE "C-C"
SEE DRAWING NO. [SUB1-E-017]

"CT-206-1" 2000/5 3 X1-X5/MR (1) "STB-CT206-1" STB

"VCB-206" 2000A 1000MVA 52 CLOSE/ TRIP/ STATUS

"CT-206-2" 2000/5 3 X1-X5/MR (1) "STB-CT206-2" STB

CL VCB-206 [SUB1-E-054]

"CT-207-1" 1200/5 3 X1-X5/MR (2) "STB-CT207-1" STB

"VCB-207" 1200A 1000MVA 52 CLOSE/ TRIP/ STATUS

"CT-207-2" 1200/5 3 X1-X5/MR (2) "STB-CT207-2" STB

"CT-207-3" 50/5 1 "STB-CT207-3" STB

CL VCB-207 [SUB1-E-056]

FEEDER PROTECTIVE RELAY "PR-207"

3

DISPLAY RELAY STATUS — RS
METERING POWER FACTOR — PF
METERING REACTIVE POWER — VAR
METERING POWER — W
METERING CURRENT — A
METERING VOLTAGE — V

- 50/51 — INSTANT/TIMED PHASE OVERCURRENT
- 59 — OVERVOLTS
- 81O/81U — OVER/UNDER FREQUENCY
- 27 — UNDERVOLTS
- 47 — NEGATIVE SEQUENCE UNDERVOLTS
- 50N/51N — INSTANT/TIMED NEUTRAL OVERCURRENT
- 67 — DIRECTIONAL OVERCURRENT
- 55 — POWER FACTOR
- 25 — SYNC CHECK

TRIP 94 74

FAILURE

CONTROL PWR 130VDC

COM PORT

ETHERNET

GROUND

LUGS

SUB1-207-F1
SUB1-207-F2
SUB1-207-F3
SUB1-207-F4
SUB1-207-F5
SUB1-207-F6

METAL ENCLOSED BUS DUCT 12470V, 2000A, 3ø, 3W, 1000 MVA

BREAKLINE "A-A" SEE DRAWING [SUB1-E-011]

SUB1-SWGR200-I1 — TO/FROM SWITCHGEAR "SUB1-SWGR-100". REFER TO DRAWING NO. [SUB1-E-011].

TO SUBSTATION NO. 2 SWITCHGEAR "SUB2-SWGR-01L". REFER TO DRAWING NO. [SUB2-E-057].

SUB1-CP2-C2 — TO CONTROL PANEL "SUB1-CP-002"

SUB1-SWGR200-C2 — TO MAIN CONTROL PANEL "SUB1-MCP-001"

PDPDC1-8,10,12 — FROM DC POWER DISTRIBUTION PANEL "SUB1-PDP-DC01". REFER TO DRAWING [SUB1-E-059] AND PANEL SCHEDULE

SUB1-SWGR200-COM2 — TO MAIN CONTROL PANEL "SUB1-MCP-001"

KEY NOTES:

(1) 2000/5 MULTI-RATIO, WINDOW TYPE CURRENT TRANSFORMER. SET INITIAL TAPS AT STB ACCORDING TO THE "CURRENT TRANSFORMER RATIO SETTINGS TABLE" SHOWN ON DRAWING NO. [SUB1-E-006].

(2) 1200/5 MULTI-RATIO, WINDOW TYPE CURRENT TRANSFORMER. SET INITIAL TAPS AT STB ACCORDING TO THE "CURRENT TRANSFORMER RATIO SETTINGS TABLE" SHOWN ON DRAWING NO. [SUB1-E-006].

BAR LENGTH ON ORIGINAL DRAWING EQUALS ONE INCH, ADJUST SCALE ACCORDINGLY.

REUSE OF DOCUMENTS

This document, and the designs incorporated herein, is an instrument of professional service that has been developed, designed and prepared by Harutunian Engineering, Inc., and is not to be used, in whole or in part, for any other project without giving written notice to Harutunian Engineering, Inc.

NO.	DATE:	DESCRIPTION

HARUTUNIAN ENGINEERING INCORPORATED

TEXAS FIRM REGISTRATION NUMBER F-2408

ENGINEERING AND ENVIRONMENTAL CONSULTANTS
8100 CROSS PARK DRIVE
AUSTIN, TEXAS 78754

STATE OF TEXAS — SHANT HARUTUNIAN 87735 — REGISTERED PROFESSIONAL ENGINEER — 10/7/2019

DESIGNED BY:	HEI
CHECKED BY:	HEI
APPROVED BY:	HEI
SUBMITTAL DATE:	OCTOBER 2019
SCALE:	AS SHOWN

SOUTH AUSTIN REGIONAL WASTEWATER TREATMENT PLANT
ELECTRICAL SUBSTATION NO. 1 REPLACEMENT PROJECT
CIP I.D.# 3333.032

SUBSTATION NO. 1 "SUB1-SWGR-200"
DETAILED ONE-LINE DIAGRAM -
PROPOSED (SHEET 3 OF 8)

PROJECT NO: 2014-300 | SHT. 617 OF 866 | DWG NO. SUB1-E-016

12470V SWITCHGEAR "SUB1–SWGR–200"

12470V, 2000A, 3ø, 3W, 1000MVA

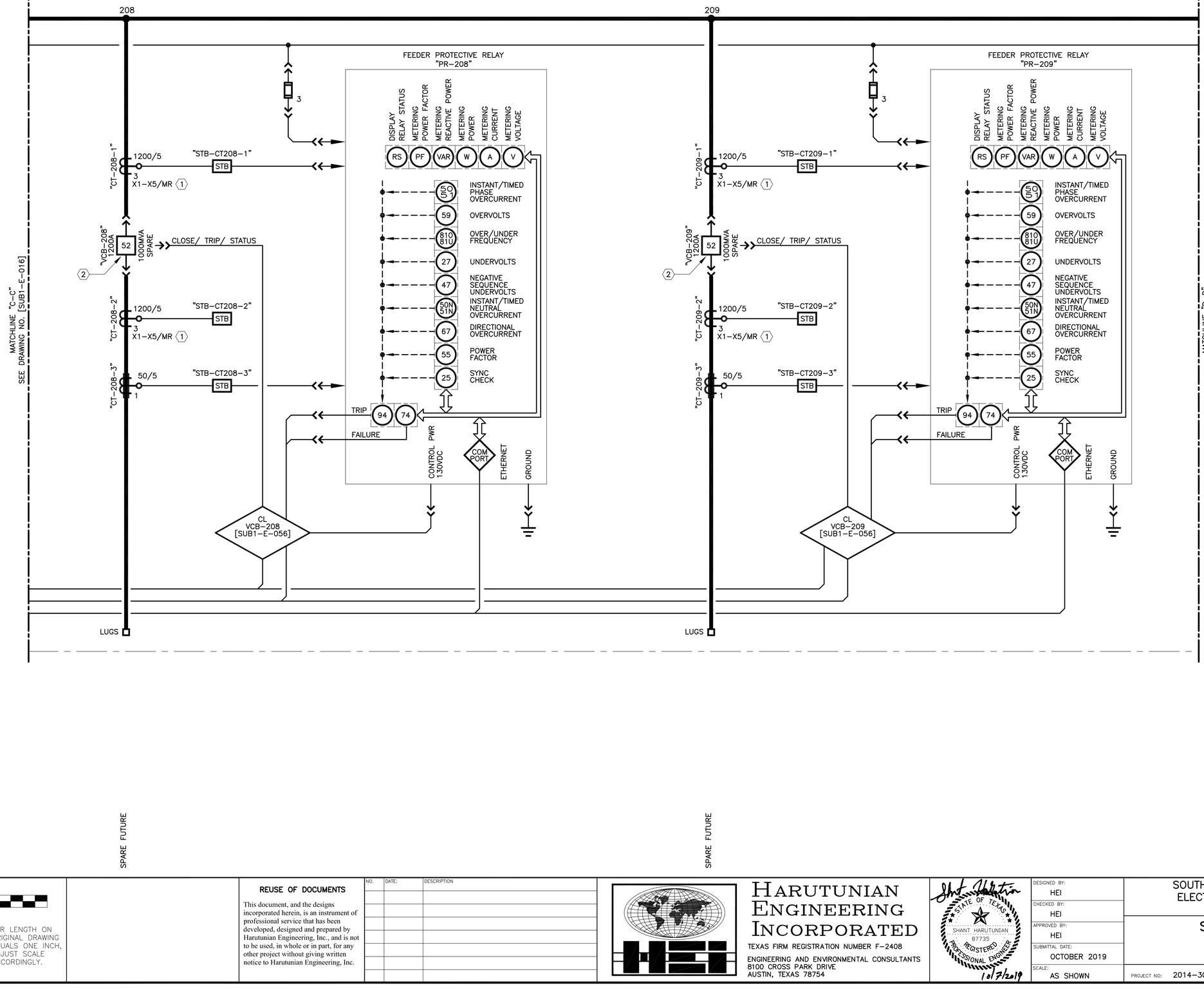

KEY NOTES:

1. 1200/5 MULTI–RATIO, WINDOW TYPE CURRENT TRANSFORMER. SET INITIAL TAPS AT STB ACCORDING TO THE "CURRENT TRANSFORMER RATIO SETTINGS TABLE" SHOWN ON DRAWING NO. [SUB1–E–006].
2. CIRCUIT BREAKER SHALL BE INSTALLED AS SPARE.

BAR LENGTH ON ORIGINAL DRAWING EQUALS ONE INCH, ADJUST SCALE ACCORDINGLY.

REUSE OF DOCUMENTS

This document, and the designs incorporated herein, is an instrument of professional service that has been developed, designed and prepared by Harutunian Engineering, Inc., and is not to be used, in whole or in part, for any other project without giving written notice to Harutunian Engineering, Inc.

NO.	DATE:	DESCRIPTION

HARUTUNIAN ENGINEERING INCORPORATED

TEXAS FIRM REGISTRATION NUMBER F–2408

ENGINEERING AND ENVIRONMENTAL CONSULTANTS
8100 CROSS PARK DRIVE
AUSTIN, TEXAS 78754

STATE OF TEXAS — SHANT HARUTUNIAN — 87735 — REGISTERED PROFESSIONAL ENGINEER — 10/7/2019

DESIGNED BY:	HEI
CHECKED BY:	HEI
APPROVED BY:	HEI
SUBMITTAL DATE:	OCTOBER 2019
SCALE:	AS SHOWN

SOUTH AUSTIN REGIONAL WASTEWATER TREATMENT PLANT
ELECTRICAL SUBSTATION NO. 1 REPLACEMENT PROJECT
CIP I.D.# 3333.032

SUBSTATION NO. 1 "SUB1–SWGR–200" DETAILED ONE–LINE DIAGRAM – PROPOSED (SHEET 4 OF 8)

PROJECT NO: 2014–300 | SHT. 618 OF 866 | DWG NO. SUB1–E–017

12470V SWITCHGEAR "SUB1-SWGR-200"

12470V, 2000A, 3ø, 3W, 1000MVA

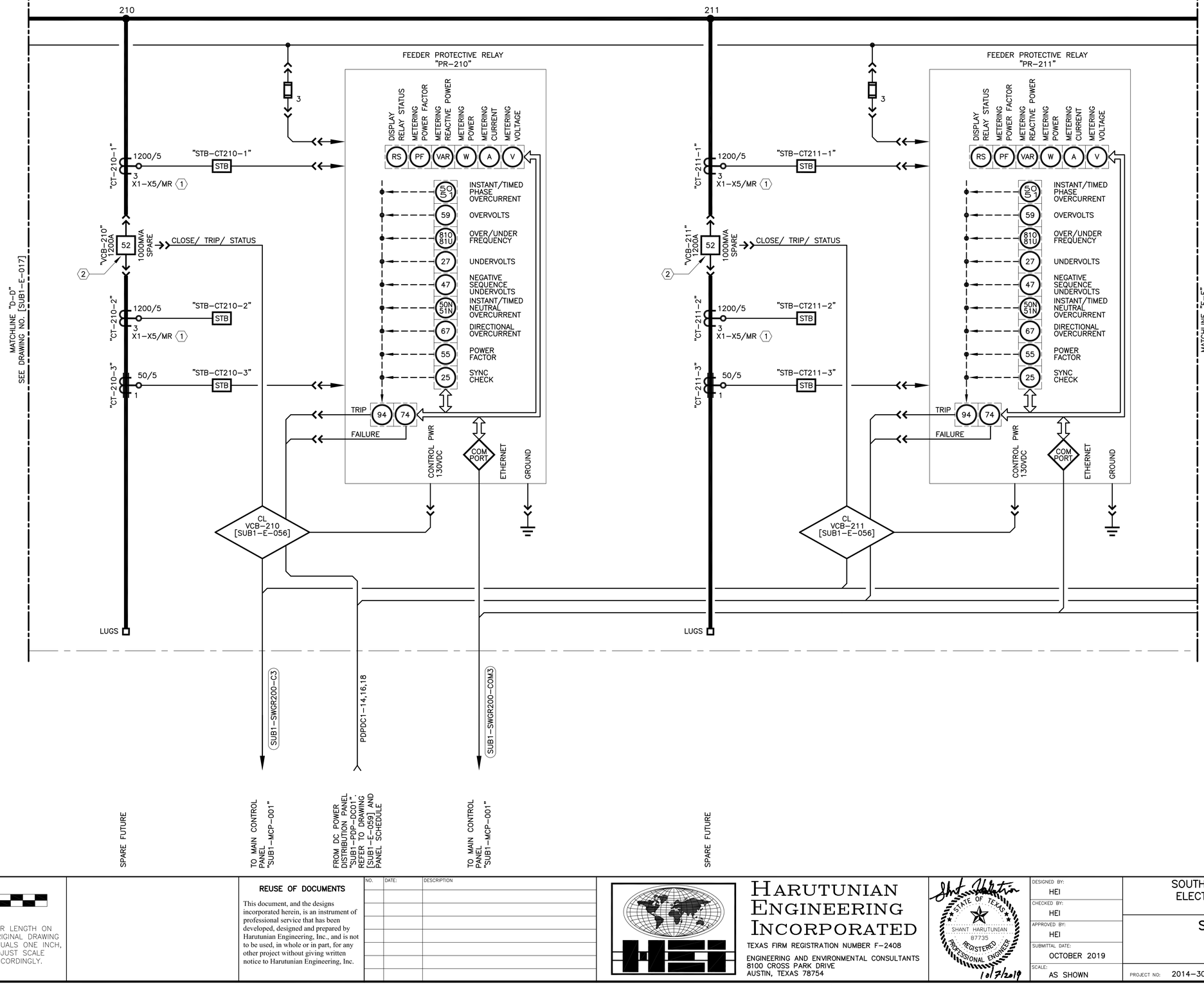

KEY NOTES:

1. 1200/5 MULTI-RATIO, WINDOW TYPE CURRENT TRANSFORMER. SET INITIAL TAPS AT STB ACCORDING TO THE "CURRENT TRANSFORMER RATIO SETTINGS TABLE" SHOWN ON DRAWING NO. [SUB1-E-006].
2. CIRCUIT BREAKER SHALL BE INSTALLED AS SPARE.

BAR LENGTH ON ORIGINAL DRAWING EQUALS ONE INCH, ADJUST SCALE ACCORDINGLY.

REUSE OF DOCUMENTS

This document, and the designs incorporated herein, is an instrument of professional service that has been developed, designed and prepared by Harutunian Engineering, Inc., and is not to be used, in whole or in part, for any other project without giving written notice to Harutunian Engineering, Inc.

NO.	DATE:	DESCRIPTION

HARUTUNIAN ENGINEERING INCORPORATED
TEXAS FIRM REGISTRATION NUMBER F-2408
ENGINEERING AND ENVIRONMENTAL CONSULTANTS
8100 CROSS PARK DRIVE
AUSTIN, TEXAS 78754

STATE OF TEXAS — SHANT HARUTUNIAN — 87735 — REGISTERED PROFESSIONAL ENGINEER — 10/7/2019

DESIGNED BY:	HEI
CHECKED BY:	HEI
APPROVED BY:	HEI
SUBMITTAL DATE:	OCTOBER 2019
SCALE:	AS SHOWN

SOUTH AUSTIN REGIONAL WASTEWATER TREATMENT PLANT
ELECTRICAL SUBSTATION NO. 1 REPLACEMENT PROJECT
CIP I.D.# 3333.032

SUBSTATION NO. 1 "SUB1-SWGR-200"
DETAILED ONE-LINE DIAGRAM -
PROPOSED (SHEET 5 OF 8)

PROJECT NO: 2014-300 | SHT. 619 OF 866 | DWG NO. SUB1-E-018

12470V SWITCHGEAR "SUB1-SWGR-200"

12470V, 2000A, 3ø, 3W, 1000MVA

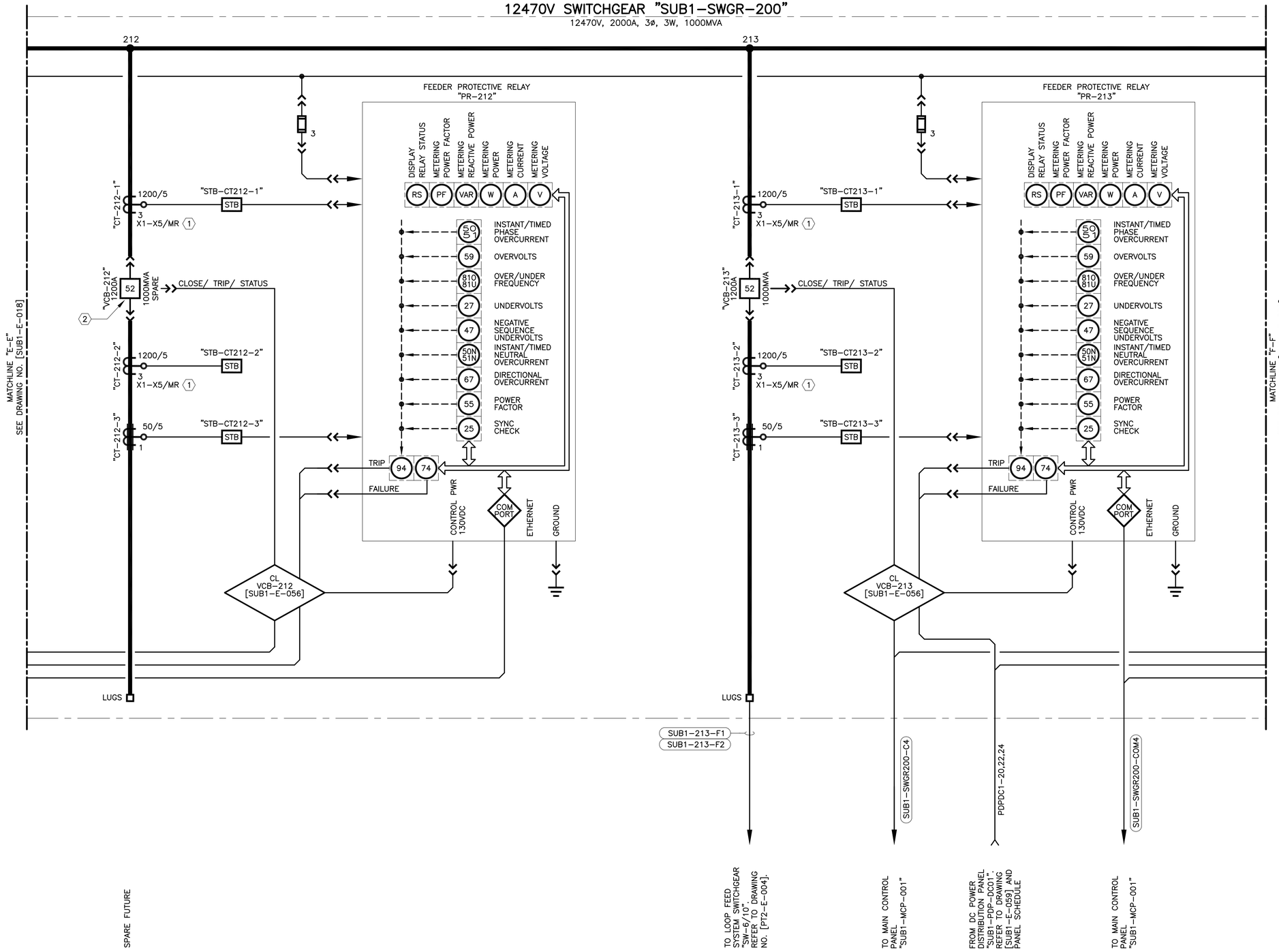

KEY NOTES:

1. 1200/5 MULTI-RATIO, WINDOW TYPE CURRENT TRANSFORMER. SET INITIAL TAPS AT STB ACCORDING TO THE "CURRENT TRANSFORMER RATIO SETTINGS TABLE" SHOWN ON DRAWING NO. [SUB1-E-006].
2. CIRCUIT BREAKER SHALL BE INSTALLED AS SPARE.

BAR LENGTH ON ORIGINAL DRAWING EQUALS ONE INCH, ADJUST SCALE ACCORDINGLY.

REUSE OF DOCUMENTS

This document, and the designs incorporated herein, is an instrument of professional service that has been developed, designed and prepared by Harutunian Engineering, Inc., and is not to be used, in whole or in part, for any other project without giving written notice to Harutunian Engineering, Inc.

NO.	DATE:	DESCRIPTION

HARUTUNIAN ENGINEERING INCORPORATED
TEXAS FIRM REGISTRATION NUMBER F-2408
ENGINEERING AND ENVIRONMENTAL CONSULTANTS
8100 CROSS PARK DRIVE
AUSTIN, TEXAS 78754

STATE OF TEXAS — SHANT HARUTUNIAN 87735 — REGISTERED PROFESSIONAL ENGINEER — 10/7/2019

DESIGNED BY:	HEI
CHECKED BY:	HEI
APPROVED BY:	HEI
SUBMITTAL DATE:	OCTOBER 2019
SCALE:	AS SHOWN

SOUTH AUSTIN REGIONAL WASTEWATER TREATMENT PLANT
ELECTRICAL SUBSTATION NO. 1 REPLACEMENT PROJECT
CIP I.D.# 3333.032

SUBSTATION NO. 1 "SUB1-SWGR-200"
DETAILED ONE-LINE DIAGRAM -
PROPOSED (SHEET 6 OF 8)

PROJECT NO: 2014-300 | SHT. 620 OF 866 | DWG NO. SUB1-E-019

12470V SWITCHGEAR "SUB1-SWGR-200"

12470V, 2000A, 3ø, 3W, 1000MVA

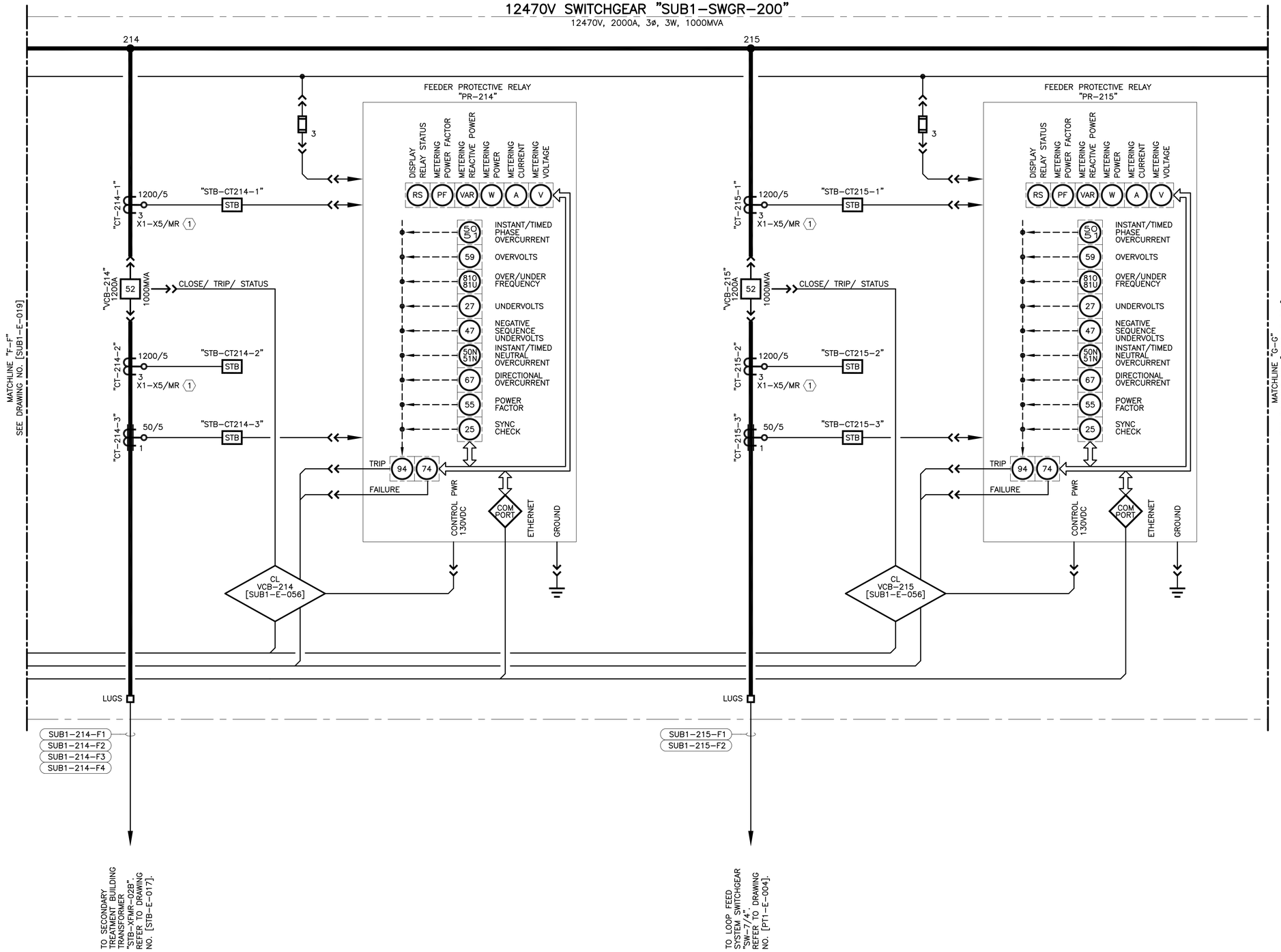

KEY NOTES:

(1) 1200/5 MULTI-RATIO, WINDOW TYPE CURRENT TRANSFORMER. SET INITIAL TAPS AT STB ACCORDING TO THE "CURRENT TRANSFORMER RATIO SETTINGS TABLE" SHOWN ON DRAWING NO. [SUB1-E-006].

BAR LENGTH ON ORIGINAL DRAWING EQUALS ONE INCH, ADJUST SCALE ACCORDINGLY.

REUSE OF DOCUMENTS

This document, and the designs incorporated herein, is an instrument of professional service that has been developed, designed and prepared by Harutunian Engineering, Inc., and is not to be used, in whole or in part, for any other project without giving written notice to Harutunian Engineering, Inc.

NO.	DATE:	DESCRIPTION

HARUTUNIAN ENGINEERING INCORPORATED

TEXAS FIRM REGISTRATION NUMBER F-2408

ENGINEERING AND ENVIRONMENTAL CONSULTANTS
8100 CROSS PARK DRIVE
AUSTIN, TEXAS 78754

STATE OF TEXAS
SHANT HARUTUNIAN
87735
REGISTERED
PROFESSIONAL ENGINEER
10/7/2019

DESIGNED BY:	HEI
CHECKED BY:	HEI
APPROVED BY:	HEI
SUBMITTAL DATE:	OCTOBER 2019
SCALE:	AS SHOWN

SOUTH AUSTIN REGIONAL WASTEWATER TREATMENT PLANT
ELECTRICAL SUBSTATION NO. 1 REPLACEMENT PROJECT
CIP I.D.# 3333.032

SUBSTATION NO. 1 "SUB1-SWGR-200"
DETAILED ONE-LINE DIAGRAM -
PROPOSED (SHEET 7 OF 8)

PROJECT NO: 2014-300 | SHT. 621 OF 866 | DWG NO. SUB1-E-020

KEY NOTES:

(1) 1200/5 MULTI-RATIO, WINDOW TYPE CURRENT TRANSFORMER. SET INITIAL TAPS AT STB ACCORDING TO THE "CURRENT TRANSFORMER RATIO SETTINGS TABLE" SHOWN ON DRAWING NO. [SUB1-E-006].

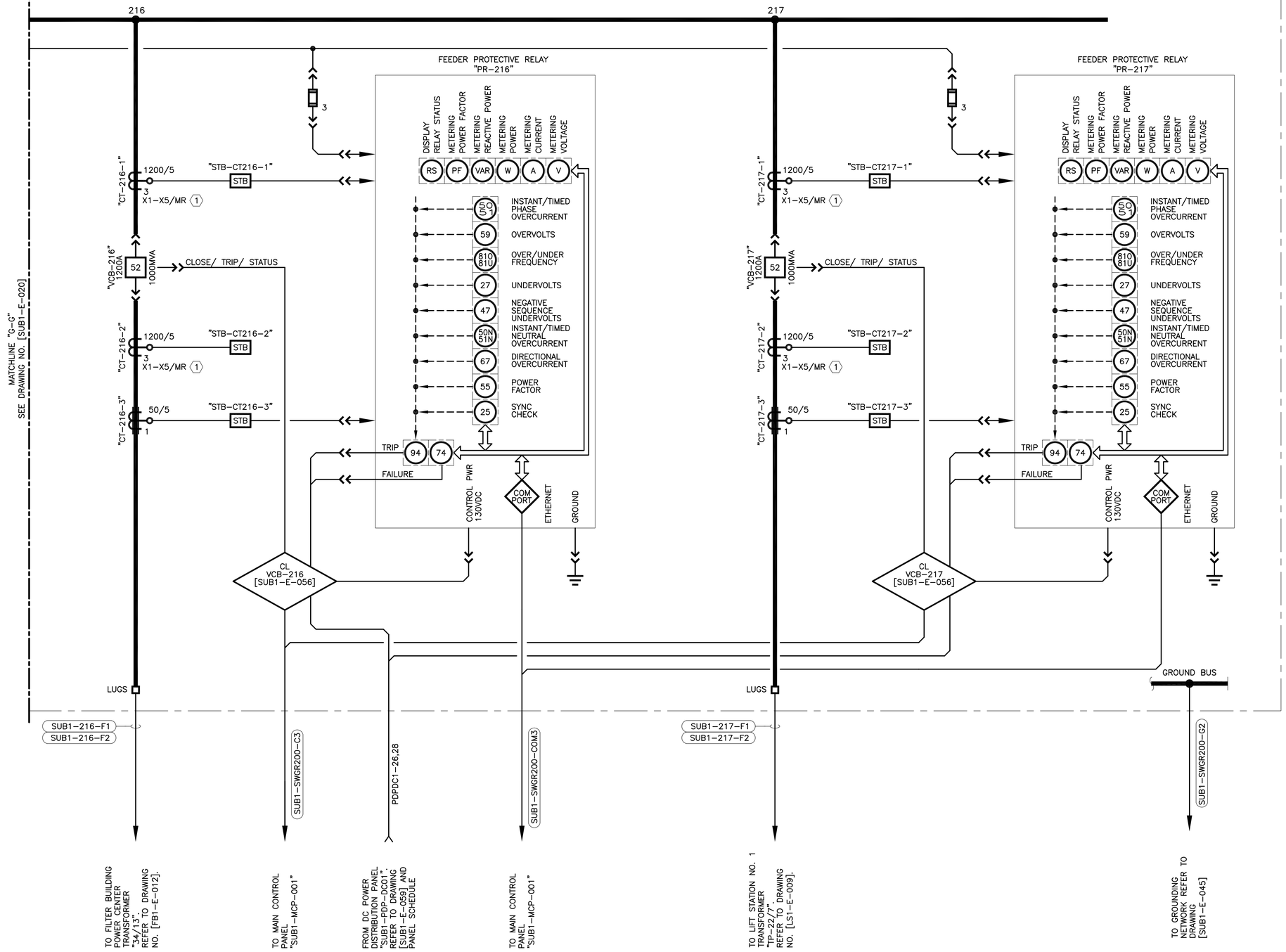

BAR LENGTH ON ORIGINAL DRAWING EQUALS ONE INCH, ADJUST SCALE ACCORDINGLY.

REUSE OF DOCUMENTS

This document, and the designs incorporated herein, is an instrument of professional service that has been developed, designed and prepared by Harutunian Engineering, Inc., and is not to be used, in whole or in part, for any other project without giving written notice to Harutunian Engineering, Inc.

NO.	DATE:	DESCRIPTION

HARUTUNIAN ENGINEERING INCORPORATED
TEXAS FIRM REGISTRATION NUMBER F-2408
ENGINEERING AND ENVIRONMENTAL CONSULTANTS
8100 CROSS PARK DRIVE
AUSTIN, TEXAS 78754

SHANT HARUTUNIAN 87735 REGISTERED PROFESSIONAL ENGINEER STATE OF TEXAS
10/7/2019

DESIGNED BY:	HEI
CHECKED BY:	HEI
APPROVED BY:	HEI
SUBMITTAL DATE:	OCTOBER 2019
SCALE:	AS SHOWN

SOUTH AUSTIN REGIONAL WASTEWATER TREATMENT PLANT
ELECTRICAL SUBSTATION NO. 1 REPLACEMENT PROJECT
CIP I.D.# 3333.032

SUBSTATION NO. 1 "SUB1-SWGR-200" DETAILED ONE-LINE DIAGRAM - PROPOSED (SHEET 8 OF 8)

PROJECT NO: 2014-300 | SHT. 622 OF 866 | DWG NO. SUB1-E-021

480VAC, 3ø FROM "SUB1-XFMR-CPT100" (NORMAL FEED). REFER TO DRAWING NO. [SUB1-E-013].

480VAC, 3ø FROM "SUB1-XFMR-CPT200" (EMERGENCY FEED). REFER TO DRAWING NO. [SUB1-E-014].

SUB1-ATS1-NF1
SUB1-ATS1-NF2
SUB1-ATS1-EF1
SUB1-ATS1-EF2

AUTOMATIC TRANSFER AND BYPASS ISOLATION SWITCH "SUB1-ATS-001" 3P-600A 3ø, 3W, 480V 50kA W.C.R.

NORM
EMERG.
NORM BP
EMERG. BP

SUB1-ATS1-C

SUB1-PDP1-F1
SUB1-PDP1-F2

TO MAIN CONTROL PANEL "SUB1-MCP-001"

480VAC, 600A, 3ø, 3W, 42,000 A.I.C.

CB 3P-600A "BKR-PDP1"

A | BL | BR | CR | HL | CL | EL | ER | FL | FR | MATCHLINE "A-A"

CB 2P-80A "BKR-XFMRPDP2"
CB 2P-40A "BKR-XFMRCHGR1"
CB 2P-40A "BKR-XFMRCHGR2"
CB 3P-20A "BKR-SPDPDP1"
CB 3P-70A "BKR-XFMRLP1"
CB 3P-60A "BKR-CU1"
CB 3P-25A "BKR-ACU1"
CB 3P-60A "BKR-CU2"
CB 3P-25A "BKR-ACU2"

SUB1-XFMRPDP2-P
SUB1-XFMRCHGR1-P
SUB1-XFMRCHGR2-P
SUB1-SPDPDP1-P

ULTRA-ISOLATOR TRANSFORMER "SUB1-XFMR-PDP2" 30kVA 1ø ∠480V ∠240/120V
ULTRA-ISOLATOR TRANSFORMER "SUB1-XFMR-CHGR1" 15kVA 1ø ∠480V ∠480V
ULTRA-ISOLATOR TRANSFORMER "SUB1-XFMR-CHGR2" 15kVA 1ø ∠480V ∠480V

SPD "SUB1-SPD-PDP1"

SUB1-XFMRPDP2-G
SUB1-PDP2-F1
SUB1-XFMRCHGR1-G
SUB1-CHGR1-P
SUB1-XFMRCHGR2-G
SUB1-CHGR2-P
SUB1-SPDPDP1-C
SUB1-XFMRLP1-P

TO GROUNDING NETWORK REFER TO DRAWING [SUB1-E-045].
TO GROUNDING NETWORK REFER TO DRAWING [SUB1-E-045].
TO BATTERY CHARGING ASSEMBLY "SUB1-CHGR-001" DRAWING NO. [SUB1-E-023]
TO GROUNDING NETWORK REFER TO DRAWING [SUB1-E-045].
TO BATTERY CHARGING ASSEMBLY "SUB1-CHGR-002" DRAWING NO. [SUB1-E-023]
SURGE PROTECTIVE DEVICE "SUB1-SPD-PDP1"
TO MAIN CONTROL PANEL "SUB1-MCP-001"

TRANSFORMER "SUB1-XFMR-LP1" 45kVA 3ø Δ480V Y208/120V

SUB1-XFMRLP1-G
SUB1-LP1-P

SUB1-LP-001 208/120VAC 3ø 4W 225A BUS 150A MCB 54 POLE 10,000 AIC

TO GROUNDING NETWORK REFER TO DRAWING [SUB1-E-045].

LIGHTING/AUXILIARY PANELBOARD "SUB1-LP-001"

CB 3P-60A "SUB1-DS-CU1" SUB1-CU1-P
CB 3P-25A "SUB1-DS-ACU1" SUB1-ACU1-P
CB 3P-60A "SUB1-DS-CU2" SUB1-CU2-P
CB 3P-25A "SUB1-DS-ACU2" SUB1-ACU2-P

SUB1-CU1-COM
SUB1-ACU1-C
SUB1-CU2-COM
SUB1-ACU2-C

42kVA
9kVA
42kVA
9kVA

CONDENSING UNIT "SUB1-CU-001"
AIR CONDITIONING UNIT "SUB1-ACU-001"
TO MAIN CONTROL PANEL "SUB1-MCP-001"
CONDENSING UNIT "SUB1-CU-002"
AIR CONDITIONING UNIT "SUB1-ACU-002"
TO MAIN CONTROL PANEL "SUB1-MCP-001"

DC-AC INVERSION SYSTEM ASSEMBLY "SUB1-INV-001"

INVERTER
INPUT: 130VDC
OUTPUT: 240/120VAC, 1ø, 10kVA

CL INV-001 [SUB1-E-061]

N.O. N.C.

PDPDC1-32

FROM DC PANEL "SUB1-PDP-DC01", REFER TO DRAWING [SUB1-E-023]

SUB1-INV1-C

TO MAIN CONTROL PANEL "SUB1-MCP-001"

240/120V POWER DISTRIBUTION PANEL "SUB1-PDP-002"

CB 2P-150A "BKR-PDP2"

A | BL | BR

240/120VAC, 225A, 1ø, 3W, 10,000 A.I.C.

CB 2P-150A "BKR-INV1"
CB 2P-150A "BKR-ATS2"

SUB1-INV1-P
SUB1-ATS2-EF1
SUB1-PDP2-G

AUTOMATIC TRANSFER AND BYPASS ISOLATION SWITCH "SUB1-ATS-002" 2P-150A 1ø, 3W, 240/120VAC 10,000A W.C.R. (4)

NORM
EMERG.
NORM BP
EMERG. BP

SUB1-ATS2-NF1

TO GROUNDING NETWORK, REFER TO DRAWING NO. [SUB1-E-045].

SUB1-ATS2-C
SUB1-LP2-P

SUB1-LP-002 240/120VAC 1ø, 3W 225A BUS 150A MCB 30 POLE 10,000 AIC (5)

TO MAIN CONTROL PANEL "SUB1-MCP-001"
LIGHTING/AUXILIARY PANELBOARD "SUB1-LP-002"

480V POWER DISTRIBUTION PANEL "SUB1-PDP-001"

MATCHLINE "A-A"

DL | DR | GL | GR

CB 3P-20A "BKR-F1"
CB 3P-20A "BKR-F2"
CB 3P-30A "BKR-SP1"
CB 3P-30A "BKR-SP2"

SPARE CIRCUIT BREAKER

MCP 3P-7A SUB1-MSF1-P SUB1-F1-P
MCP 3P-7A SUB1-MSF2-P SUB1-F2-P

SUB1-MSF1-C
SUB1-MSF2-C

SUB1-PDP1-G

TO GROUNDING NETWORK, REFER TO DRAWING NO. [SUB1-E-045].

TO MAIN CONTROL PANEL "SUB1-MCP-001"
GASEOUS AIR ADSORPTION SCRUBBER "SUB1-F-001"
TO MAIN CONTROL PANEL "SUB1-MCP-001"
GASEOUS AIR ADSORPTION SCRUBBER "SUB1-F-002"

KEY NOTES:

1. FURNISH AND INSTALL ENCLOSED CIRCUIT BREAKER WITH SYMMETRICAL SHORT CIRCUIT INTERRUPTING RATING OF 42kA AT 480VAC.
2. FURNISH AND INSTALL MECHANICAL LOCKOUT MECHANISM (PADLOCK ATTACHMENT) FOR EACH CIRCUIT BREAKER IN THIS PROPOSED PANELBOARD.
3. FURNISH AND INSTALL COMBINATION MOTOR STARTER WITH SYMMETRICAL SHORT CIRCUIT INTERRUPTING RATING OF 42000A AT 480VAC.
4. FURNISH AND INSTALL WITH ISOLATED GROUND BUS BAR WHICH SHALL BE ELECTRICALLY ISOLATED FROM THE TRANSFER SWITCH CABINET/ENCLOSURE BY 600V ISOLATORS. AMPERE RATING OF THE BUS BAR SHALL BE EQUAL TO THE AMPERE RATING OF THE TRANSFER SWITCH.
5. FURNISH AND INSTALL ISOLATED GROUND BUS BAR.

BAR LENGTH ON ORIGINAL DRAWING EQUALS ONE INCH, ADJUST SCALE ACCORDINGLY.

REUSE OF DOCUMENTS

This document, and the designs incorporated herein, is an instrument of professional service that has been developed, designed and prepared by Harutunian Engineering, Inc., and is not to be used, in whole or in part, for any other project without giving written notice to Harutunian Engineering, Inc.

NO.	DATE:	DESCRIPTION

HARUTUNIAN ENGINEERING INCORPORATED
TEXAS FIRM REGISTRATION NUMBER F-2408
ENGINEERING AND ENVIRONMENTAL CONSULTANTS
8100 CROSS PARK DRIVE
AUSTIN, TEXAS 78754

STATE OF TEXAS
SHANT HARUTUNIAN
87735
REGISTERED
PROFESSIONAL ENGINEER
10/7/2019

DESIGNED BY:	HEI
CHECKED BY:	HEI
APPROVED BY:	HEI
SUBMITTAL DATE:	OCTOBER 2019
SCALE:	AS SHOWN

SOUTH AUSTIN REGIONAL WASTEWATER TREATMENT PLANT
ELECTRICAL SUBSTATION NO. 1 REPLACEMENT PROJECT
CIP I.D.# 3333.032

SUBSTATION NO. 1 AC AUXILIARY ONE-LINE DIAGRAM - PROPOSED

PROJECT NO: 2014-300 | SHT. 623 OF 866 | DWG NO. SUB1-E-022

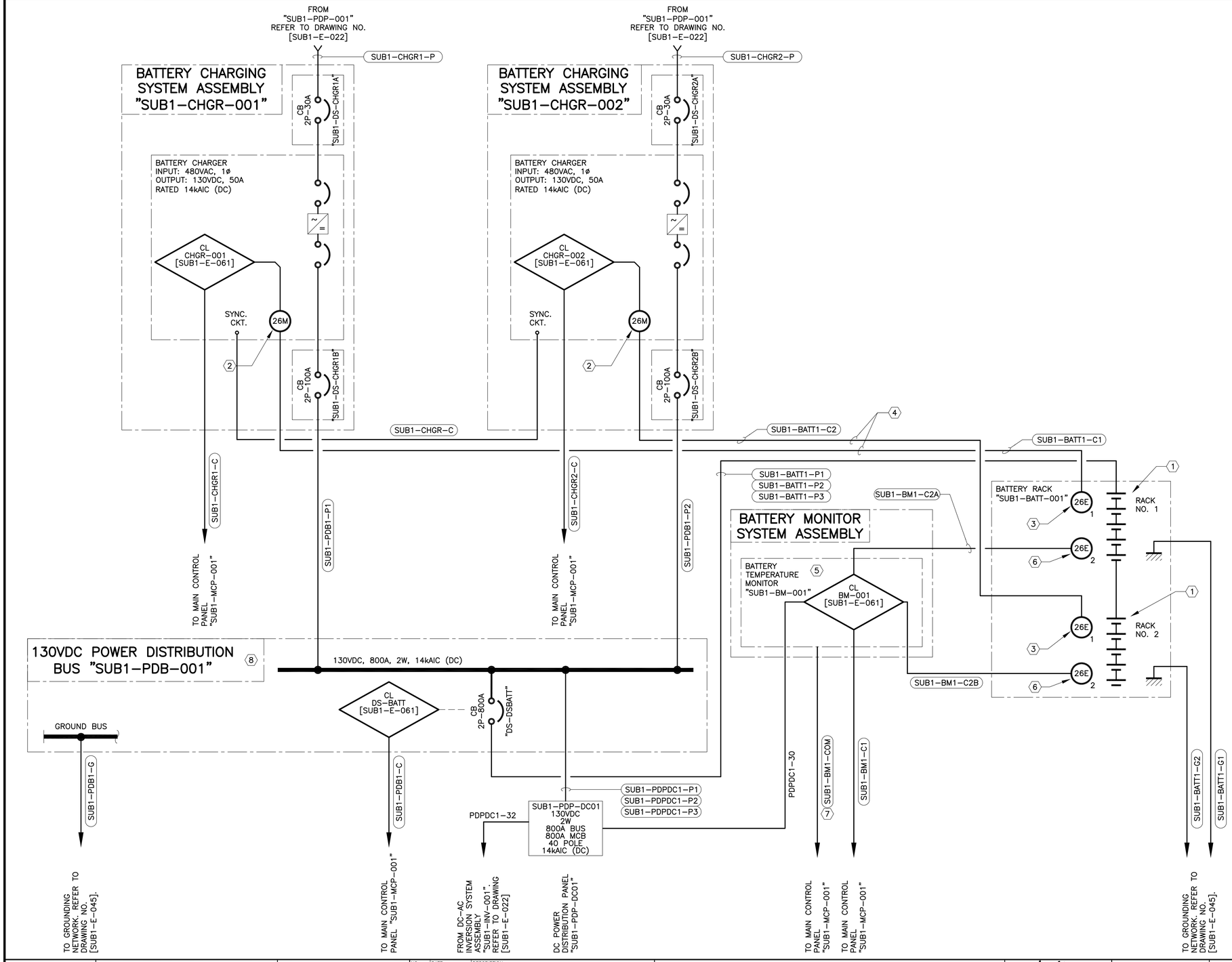

KEY NOTES:

1. BATTERY RACK CONTAINS 30 CELLS @ 2.2VDC PER CELL. BATTERY RACKS NO. 1 AND NO. 2 ARE CONNECTED IN SERIES FOR A TOTAL VOLTAGE OF 132VDC.
2. FLOAT VOLTAGE TEMPERATURE COMPENSATION CIRCUIT INTEGRAL TO BATTERY CHARGER.
3. BATTERY TEMPERATURE PROBE PROVIDED BY BATTERY CHARGER MANUFACTURER. INSTALL PER THE BATTERY, BATTERY RACK, AND BATTERY CHARGER MANUFACTURERS' RECOMMENDATIONS.
4. BATTERY TEMPERATURE PROBE CABLES PROVIDED BY BATTERY CHARGER MANUFACTURER. COORDINATE LENGTH OF CABLES WITH PLAN DRAWINGS AND WITH BATTERY CHARGER MANUFACTURER AND INSTALL IN CONDUIT AS SHOWN. BUSH END OF CONDUIT AT BATTERY RACK.
5. FURNISH AND INSTALL BATTERY MONITOR AND MAKE ALL FINAL CONNECTIONS PER THE BATTERY AND BATTERY MONITOR MANUFACTURERS' RECOMMENDATIONS.
6. FURNISH AND INSTALL BATTERY TEMPERATURE ELEMENTS AND MAKE ALL FINAL CONNECTIONS PER THE BATTERY AND BATTERY MONITOR MANUFACTURERS' RECOMMENDATIONS.
7. FURNISH AND INSTALL ONE(1) COPPER ETHERNET CABLE (COMM) IN A MINIMUM 2" CONDUIT. ROUTE CONDUIT AND WIRE BETWEEN THE BATTERY MONITOR SYSTEM ASSEMBLY AND THE MAIN CONTROL PANEL "SUB1-MCP-001" AND MAKE ALL FINAL TERMINATIONS. REFER TO PLC ARCHITECTURE AND WIRING SCHEMATIC ON DRAWINGS [SUB1-I-001] AND [SUB1-E-061] FOR ADDITIONAL INFORMATION.
8. FURNISH AND INSTALL ISOLATED GROUND BUS BAR.

BAR LENGTH ON ORIGINAL DRAWING EQUALS ONE INCH, ADJUST SCALE ACCORDINGLY.

REUSE OF DOCUMENTS

This document, and the designs incorporated herein, is an instrument of professional service that has been developed, designed and prepared by Harutunian Engineering, Inc., and is not to be used, in whole or in part, for any other project without giving written notice to Harutunian Engineering, Inc.

NO.	DATE:	DESCRIPTION

HARUTUNIAN ENGINEERING INCORPORATED
TEXAS FIRM REGISTRATION NUMBER F-2408
ENGINEERING AND ENVIRONMENTAL CONSULTANTS
8100 CROSS PARK DRIVE
AUSTIN, TEXAS 78754

STATE OF TEXAS
SHANT HARUTUNIAN
87735
REGISTERED
PROFESSIONAL ENGINEER
10/7/2019

DESIGNED BY:	HEI
CHECKED BY:	HEI
APPROVED BY:	HEI
SUBMITTAL DATE:	OCTOBER 2019
SCALE:	AS SHOWN

SOUTH AUSTIN REGIONAL WASTEWATER TREATMENT PLANT
ELECTRICAL SUBSTATION NO. 1 REPLACEMENT PROJECT
CIP I.D.# 3333.032

SUBSTATION NO. 1
DC AUXILIARY
ONE-LINE DIAGRAM - PROPOSED

PROJECT NO: 2014-300 | SHT. 624 OF 866 | DWG NO. SUB1-E-023

KEY NOTES:

(1) COORDINATE SECTION CONTENTS WITH AUSTIN ENERGY AND WITH THE SWITCHGEAR MANUFACTURER. COORDINATE ALL SECTION LOCKING AND LABELING REQUIREMENTS WITH AUSTIN ENERGY AND WITH THE SWITCHGEAR MANUFACTURER. ALSO REFER TO THE CONTRACT SPECIFICATIONS.

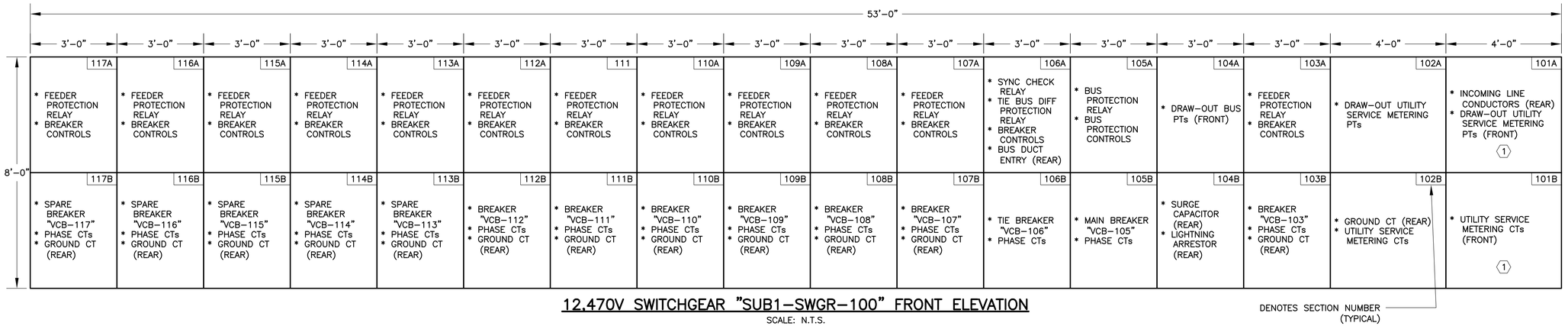

12,470V SWITCHGEAR "SUB1-SWGR-100" FRONT ELEVATION

SCALE: N.T.S.

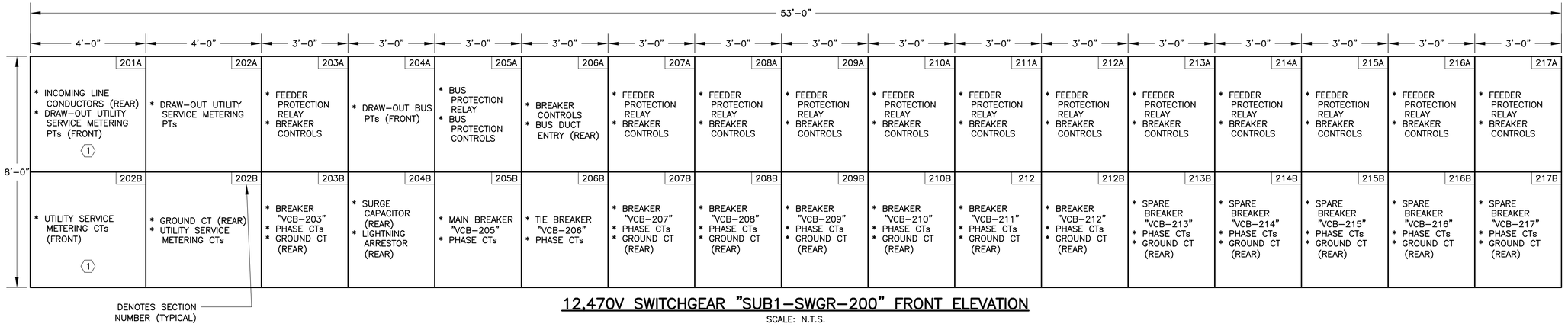

12,470V SWITCHGEAR "SUB1-SWGR-200" FRONT ELEVATION

SCALE: N.T.S.

BAR LENGTH ON ORIGINAL DRAWING EQUALS ONE INCH, ADJUST SCALE ACCORDINGLY.

REUSE OF DOCUMENTS

This document, and the designs incorporated herein, is an instrument of professional service that has been developed, designed and prepared by Harutunian Engineering, Inc., and is not to be used, in whole or in part, for any other project without giving written notice to Harutunian Engineering, Inc.

NO.	DATE:	DESCRIPTION

HARUTUNIAN ENGINEERING INCORPORATED

TEXAS FIRM REGISTRATION NUMBER F-2408

ENGINEERING AND ENVIRONMENTAL CONSULTANTS
8100 CROSS PARK DRIVE
AUSTIN, TEXAS 78754

STATE OF TEXAS
SHANT HARUTUNIAN
87735
REGISTERED
PROFESSIONAL ENGINEER
10/7/2019

DESIGNED BY:	HEI
CHECKED BY:	HEI
APPROVED BY:	HEI
SUBMITTAL DATE:	OCTOBER 2019
SCALE:	AS SHOWN

SOUTH AUSTIN REGIONAL WASTEWATER TREATMENT PLANT
ELECTRICAL SUBSTATION NO. 1 REPLACEMENT PROJECT
CIP I.D.# 3333.032

SUBSTATION NO. 1
SUB1-SWGR-100 & SUB1-SWGR-200
FRONT ELEVATIONS - PROPOSED

PROJECT NO: 2014-300 | SHT. 625 OF 866 | DWG NO. SUB1-E-024

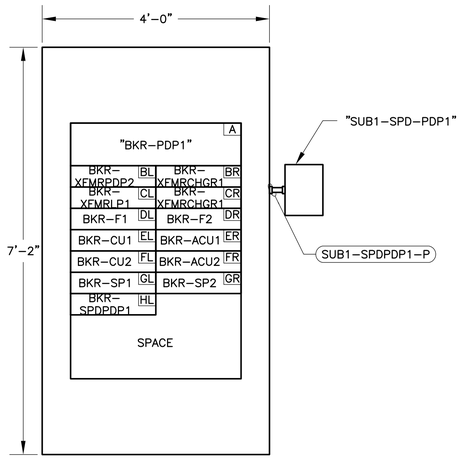

480VAC POWER DISTRIBUTION PANEL "SUB1-PDP-001" FRONT ELEVATION

SCALE: N.T.S.

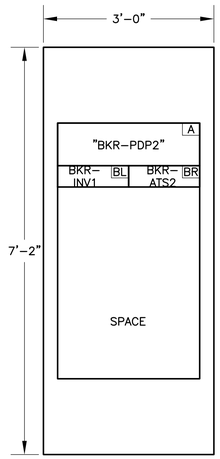

240/120VAC POWER DISTRIBUTION PANEL "SUB1-PDP-002" FRONT ELEVATION

SCALE: N.T.S.

(1)(2)	CONTROL PANEL EQUIPMENT SCHEDULE
MARK	DESCRIPTION
(1)	2'-8" WIDE X 2'-8" DEEP X 7-6" TALL, FREE STANDING INDIVIDUAL MODULAR CABINET SECTION, QUANTITY AS REQUIRED. REFER TO DRAWINGS AND SPECIFICATIONS.
(2)	10" HIGH X 9" WIDE UPPPER FAN & VENTILATION PLATE FINISHED TO MATCH PANEL.
(3)	10" HIGH X 9" WIDE LOWER VENTILATION PLATE FINISHED TO MATCH PANEL.
(4)	3-PLY, BLACK-WHITE-BLACK PHENOLIC NAMEPLATE. LETTERS BESIDE NAMEPLATE CORRESPOND TO IDENTIFICATION MARK IN NAMEPLATE SCHEDULE.
(5)	SWITCHGEAR MANAGEMENT RELAY
(6)	CONTROL PANEL DOOR
(7)	CONTROL PANEL DOOR HANDLE

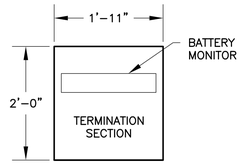

BATTERY MONITORING SYSTEM ASSEMBLY "SUB1-BM-001" FRONT ELEVATION

SCALE: N.T.S.

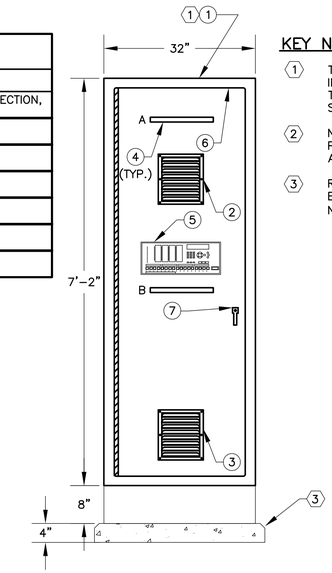

SWITCHGEAR MANAGEMENT RELAY CONTROL PANEL "SUB1-CP-002" FRONT ELEVATION

SCALE: N.T.S.

KEY NOTES:

(1) THE IDENTIFICATION MARK SHOWN NEAR THE EQUIPMENT IS INTENDED ONLY FOR CROSS REFERENCING THE ENTRIES MADE IN THE NAMEPLATE AND EQUIPMENT SCHEDULES. REFER TO SCHEDULE ON THIS DRAWING FOR ADDITIONAL INFORMATION.

(2) NUMBER IN CIRCLE CORRESPONDS TO NUMBERS ON CONTROL PANEL ELEVATIONS. REFER TO SCHEDULE ON THIS DRAWING FOR ADDITIONAL INFORMATION.

(3) REINFORCED CONCRETE HOUSEKEEPING PAD. REFER TO INDOOR ELECTRICAL EQUIPMENT PAD INSTALLATION DETAIL 4 ON DRAWING NO. [TD-E-010].

(1) CONTROL PANEL NAMEPLATE SCHEDULE

ID MARK	LINE NO.	LEGEND PLATE INSCRIPTION	LETTER SIZE (MINIMUM)
A	FIRST	SUB1-CP-002	1/2"
B	FIRST	SUB1-SMR-0001	1/4"

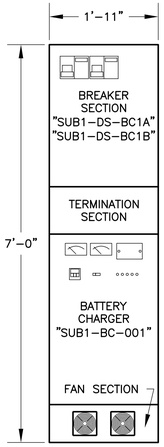

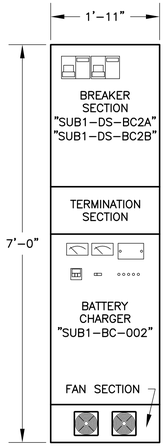

BATTERY CHARGING SYSTEM ASSEMBLIES "SUB1-BCSA-001" AND "SUB1-BCSA-002" FRONT ELEVATIONS

SCALE: N.T.S.

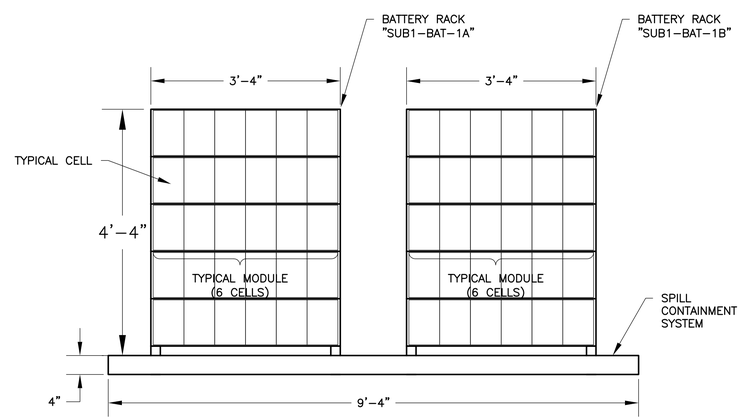

BATTERY RACKS "SUB1-BAT-1A" AND "SUB1-BAT-1B" AND SPILL CONTAINMENT FRONT ELEVATIONS

SCALE: N.T.S.

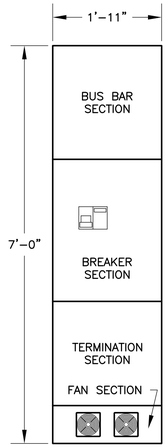

DC POWER DISTRIBUTION BUS "SUB1-PDB-001" FRONT ELEVATIONS

SCALE: N.T.S.

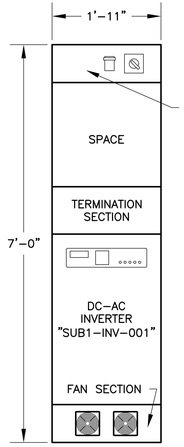

DC-AC INVERSION SYSTEM ASSEMBLY "SUB1-INVSA-001" FRONT ELEVATION

SCALE: N.T.S.

BAR LENGTH ON ORIGINAL DRAWING EQUALS ONE INCH, ADJUST SCALE ACCORDINGLY.

REUSE OF DOCUMENTS

This document, and the designs incorporated herein, is an instrument of professional service that has been developed, designed and prepared by Harutunian Engineering, Inc., and is not to be used, in whole or in part, for any other project without giving written notice to Harutunian Engineering, Inc.

NO.	DATE:	DESCRIPTION

HARUTUNIAN ENGINEERING INCORPORATED
TEXAS FIRM REGISTRATION NUMBER F-2408
ENGINEERING AND ENVIRONMENTAL CONSULTANTS
8100 CROSS PARK DRIVE
AUSTIN, TEXAS 78754

STATE OF TEXAS · SHANT HARUTUNIAN · 87735 · REGISTERED PROFESSIONAL ENGINEER · 10/7/2019

DESIGNED BY:	HEI
CHECKED BY:	HEI
APPROVED BY:	HEI
SUBMITTAL DATE:	OCTOBER 2019
SCALE:	AS SHOWN

SOUTH AUSTIN REGIONAL WASTEWATER TREATMENT PLANT
ELECTRICAL SUBSTATION NO. 1 REPLACEMENT PROJECT
CIP I.D.# 3333.032

SUBSTATION NO. 1
LOW VOLTAGE EQUIPMENT
FRONT ELEVATIONS – PROPOSED

PROJECT NO: 2014-300 | SHT. 626 OF 866 | DWG NO. SUB1-E-025

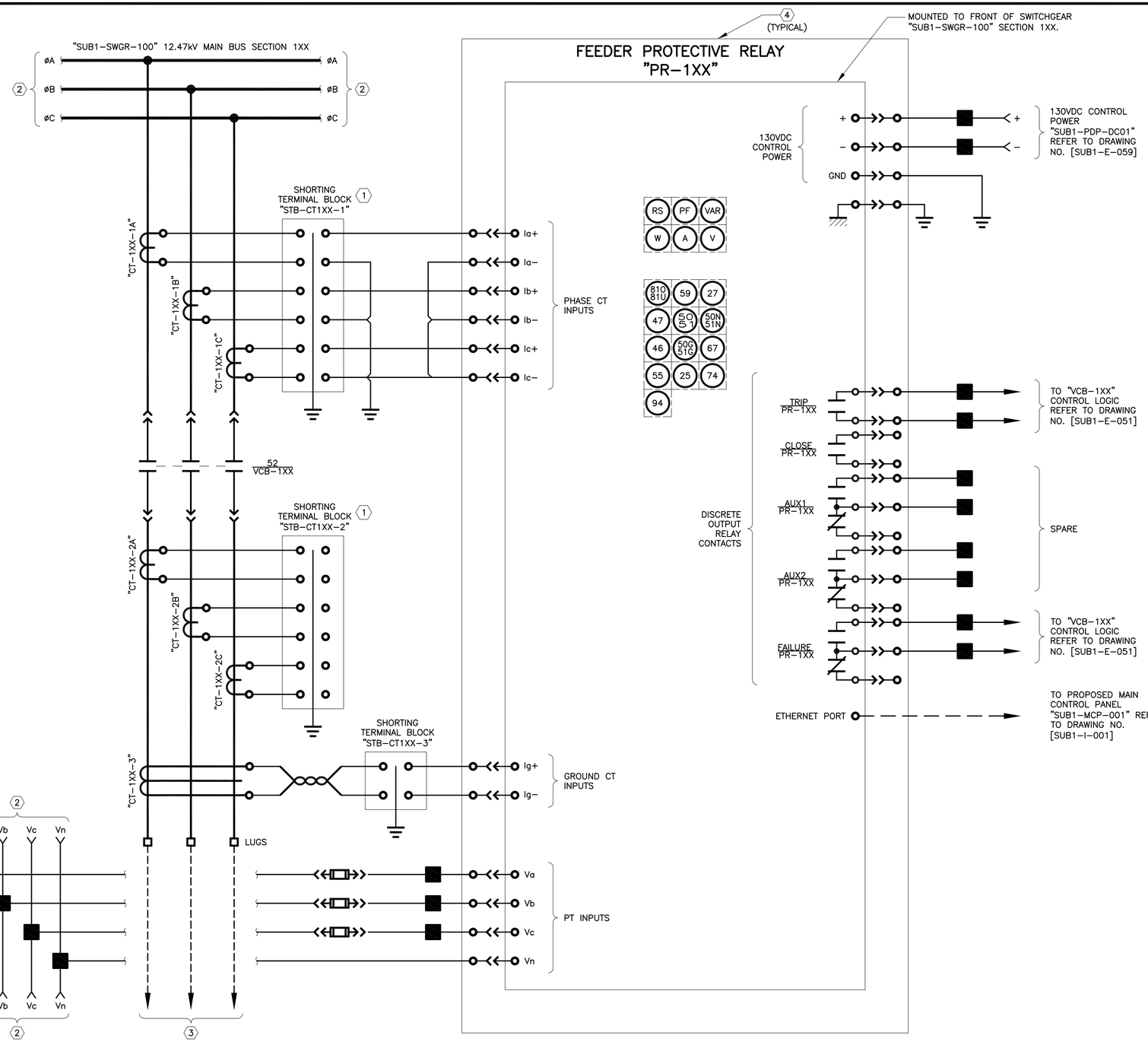

KEY NOTES:

1. CONNECT ALL TERMINALS TO THE TAP CHANGING/SHORTING TERMINAL BLOCK (STB). SET TAPS ACCORDING TO "CT TAP TABLE" ON DRAWING [SUB1–E–006].
2. CONTINUES TO ADJACENT SECTION, REFER TO ONE–LINE DIAGRAM FOR ADDITIONAL INFORMATION.
3. REFER TO ONE–LINE DIAGRAM FOR CONTINUATION AND QUANTITY OF FEEDERS.
4. THIS DRAWING IS TYPICAL FOR MULTIPLE EQUIPMENT. THE ACTUAL TAG FOR EACH EQUIPMENT WILL DIFFER FROM THAT SHOWN HERE. REFER TO THE TAG REPLACEMENT SCHEDULE ON THIS DRAWING TO DERIVE THE CORRESPONDING TAGS FOR EACH PROPOSED EQUIPMENT.

TAG REPLACEMENT TABLE 4

EQUIPMENT DESCRIPTION	1XX=
FEEDER BREAKER "VCB–107"	107
FEEDER BREAKER "VCB–108"	108
FEEDER BREAKER "VCB–109"	109
FEEDER BREAKER "VCB–110"	110
FEEDER BREAKER "VCB–111"	111
FEEDER BREAKER "VCB–112"	112
FEEDER BREAKER "VCB–113"	113
FEEDER BREAKER "VCB–114"	114
FEEDER BREAKER "VCB–115"	115
FEEDER BREAKER "VCB–116"	116
FEEDER BREAKER "VCB–117"	117

NOTE:
THIS DRAWING IS TYPICAL FOR FEEDER BREAKERS:
"SUB1–VCB–107", "SUB1–VCB–108", "SUB1–VCB–109", "SUB1–VCB–110", "SUB1–VCB–111", "SUB1–VCB–112", "SUB1–VCB–113", "SUB1–VCB–114", "SUB1–VCB–115", "SUB1–VCB–116", AND "SUB1–VCB–117".

BAR LENGTH ON ORIGINAL DRAWING EQUALS ONE INCH, ADJUST SCALE ACCORDINGLY.

REUSE OF DOCUMENTS

This document, and the designs incorporated herein, is an instrument of professional service that has been developed, designed and prepared by Harutunian Engineering, Inc., and is not to be used, in whole or in part, for any other project without giving written notice to Harutunian Engineering, Inc.

NO.	DATE:	DESCRIPTION

HARUTUNIAN ENGINEERING INCORPORATED
TEXAS FIRM REGISTRATION NUMBER F–2408
ENGINEERING AND ENVIRONMENTAL CONSULTANTS
8100 CROSS PARK DRIVE
AUSTIN, TEXAS 78754

STATE OF TEXAS · SHANT HARUTUNIAN · 87735 · REGISTERED PROFESSIONAL ENGINEER · 10/7/2019

DESIGNED BY:	HEI
CHECKED BY:	HEI
APPROVED BY:	HEI
SUBMITTAL DATE:	OCTOBER 2019
SCALE:	AS SHOWN

SOUTH AUSTIN REGIONAL WASTEWATER TREATMENT PLANT
ELECTRICAL SUBSTATION NO. 1 REPLACEMENT PROJECT
CIP I.D.# 3333.032

SUBSTATION NO. 1 "SUB1–SWGR–100" TYPICAL FEEDER BREAKER THREE LINE DIAGRAM – PROPOSED (SHEET 1 OF 5)

PROJECT NO: 2014–300 | SHT. 627 OF 866 | DWG NO. SUB1–E–026

KEY NOTES:

(1) CONNECT ALL TERMINALS TO THE TAP CHANGING/SHORTING TERMINAL BLOCK (STB). SET TAPS ACCORDING TO "CT TAP TABLE" ON DRAWING [SUB1-E-006].

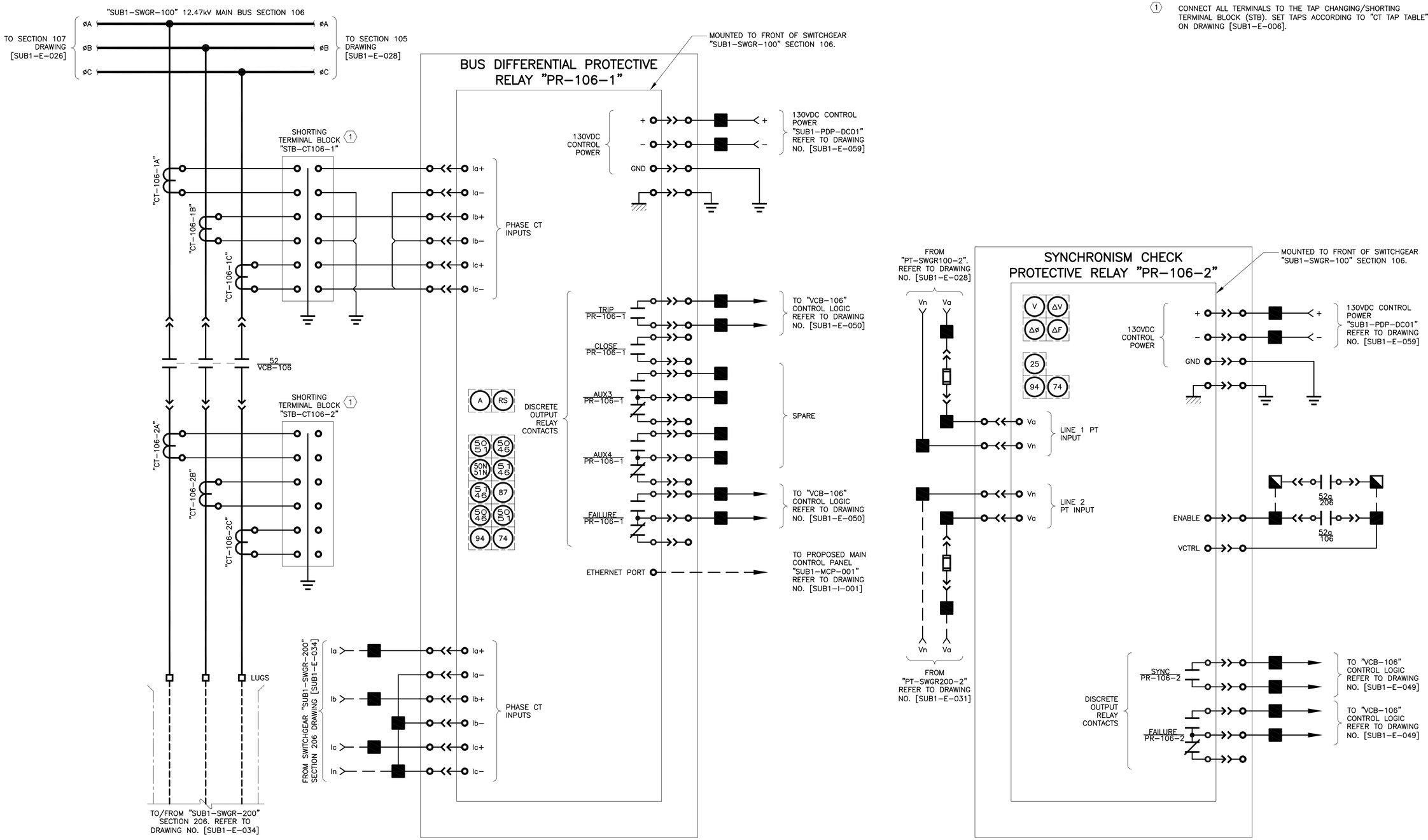

BAR LENGTH ON ORIGINAL DRAWING EQUALS ONE INCH, ADJUST SCALE ACCORDINGLY.

REUSE OF DOCUMENTS

This document, and the designs incorporated herein, is an instrument of professional service that has been developed, designed and prepared by Harutunian Engineering, Inc., and is not to be used, in whole or in part, for any other project without giving written notice to Harutunian Engineering, Inc.

NO.	DATE:	DESCRIPTION

HARUTUNIAN ENGINEERING INCORPORATED
TEXAS FIRM REGISTRATION NUMBER F-2408
ENGINEERING AND ENVIRONMENTAL CONSULTANTS
8100 CROSS PARK DRIVE
AUSTIN, TEXAS 78754

STATE OF TEXAS
SHANT HARUTUNIAN
87735
REGISTERED
PROFESSIONAL ENGINEER
10/7/2019

DESIGNED BY:	HEI
CHECKED BY:	HEI
APPROVED BY:	HEI
SUBMITTAL DATE:	OCTOBER 2019
SCALE:	AS SHOWN

SOUTH AUSTIN REGIONAL WASTEWATER TREATMENT PLANT
ELECTRICAL SUBSTATION NO. 1 REPLACEMENT PROJECT
CIP I.D.# 3333.032

SUBSTATION NO. 1 "SUB1-SWGR-100" TIE BREAKER THREE LINE DIAGRAM - PROPOSED (SHEET 2 OF 5)

PROJECT NO: 2014-300 | SHT. 628 OF 866 | DWG NO. SUB1-E-027

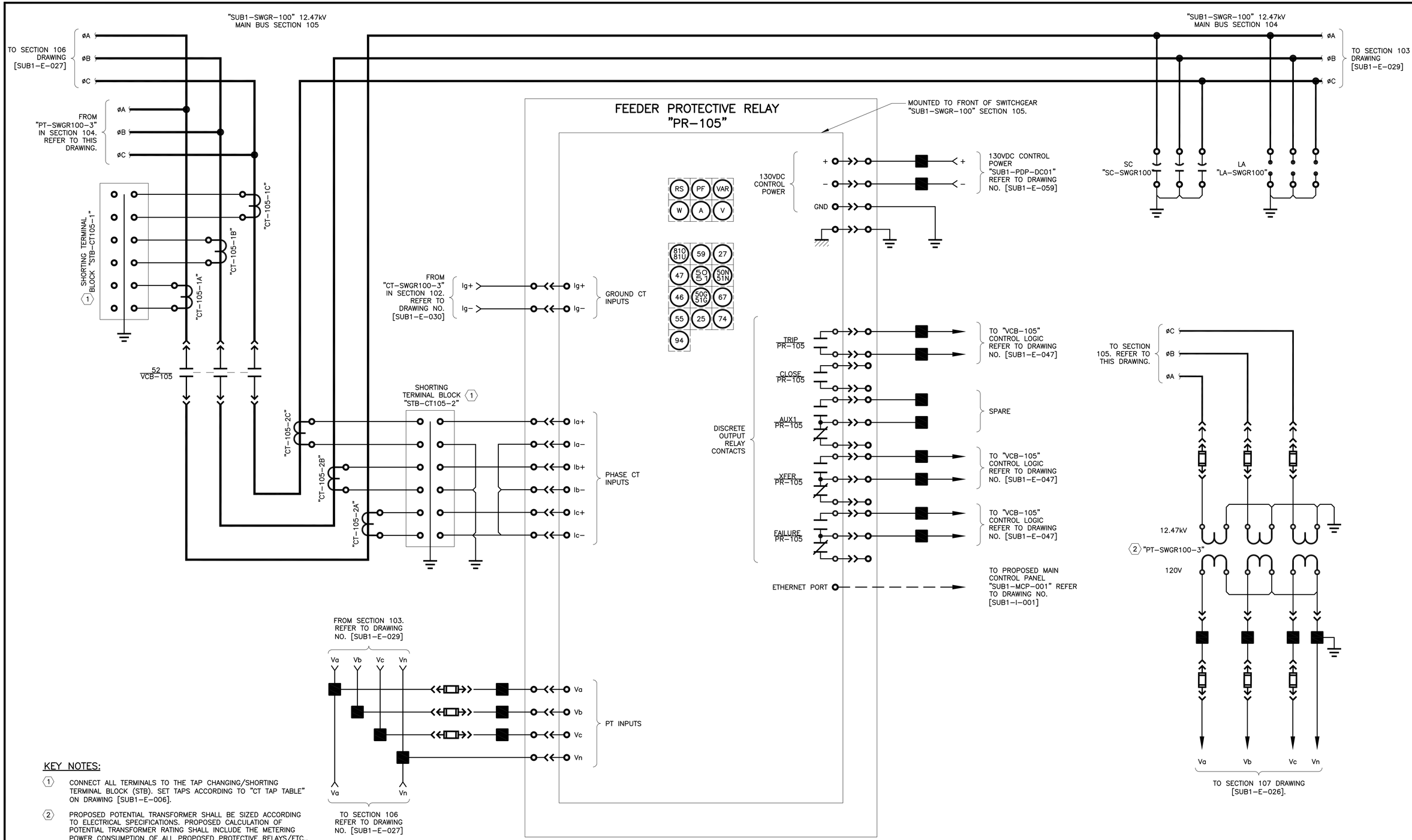

KEY NOTES:

1. CONNECT ALL TERMINALS TO THE TAP CHANGING/SHORTING TERMINAL BLOCK (STB). SET TAPS ACCORDING TO "CT TAP TABLE" ON DRAWING [SUB1-E-006].
2. PROPOSED POTENTIAL TRANSFORMER SHALL BE SIZED ACCORDING TO ELECTRICAL SPECIFICATIONS. PROPOSED CALCULATION OF POTENTIAL TRANSFORMER RATING SHALL INCLUDE THE METERING POWER CONSUMPTION OF ALL PROPOSED PROTECTIVE RELAYS/ETC., INTERCONNECTED WITH THE POTENTIAL TRANSFORMER.

BAR LENGTH ON ORIGINAL DRAWING EQUALS ONE INCH, ADJUST SCALE ACCORDINGLY.

REUSE OF DOCUMENTS

This document, and the designs incorporated herein, is an instrument of professional service that has been developed, designed and prepared by Harutunian Engineering, Inc., and is not to be used, in whole or in part, for any other project without giving written notice to Harutunian Engineering, Inc.

NO.	DATE:	DESCRIPTION

HARUTUNIAN ENGINEERING INCORPORATED

TEXAS FIRM REGISTRATION NUMBER F-2408

ENGINEERING AND ENVIRONMENTAL CONSULTANTS
8100 CROSS PARK DRIVE
AUSTIN, TEXAS 78754

STATE OF TEXAS
SHANT HARUTUNIAN
87735
REGISTERED
PROFESSIONAL ENGINEER
10/7/2019

DESIGNED BY:	HEI
CHECKED BY:	HEI
APPROVED BY:	HEI
SUBMITTAL DATE:	OCTOBER 2019
SCALE:	AS SHOWN

SOUTH AUSTIN REGIONAL WASTEWATER TREATMENT PLANT
ELECTRICAL SUBSTATION NO. 1 REPLACEMENT PROJECT
CIP I.D.# 3333.032

SUBSTATION NO. 1 "SUB1-SWGR-100" MAIN BREAKER THREE LINE DIAGRAM - PROPOSED (SHEET 3 OF 5)

PROJECT NO: 2014-300 | SHT. 629 OF 866 | DWG NO. SUB1-E-028

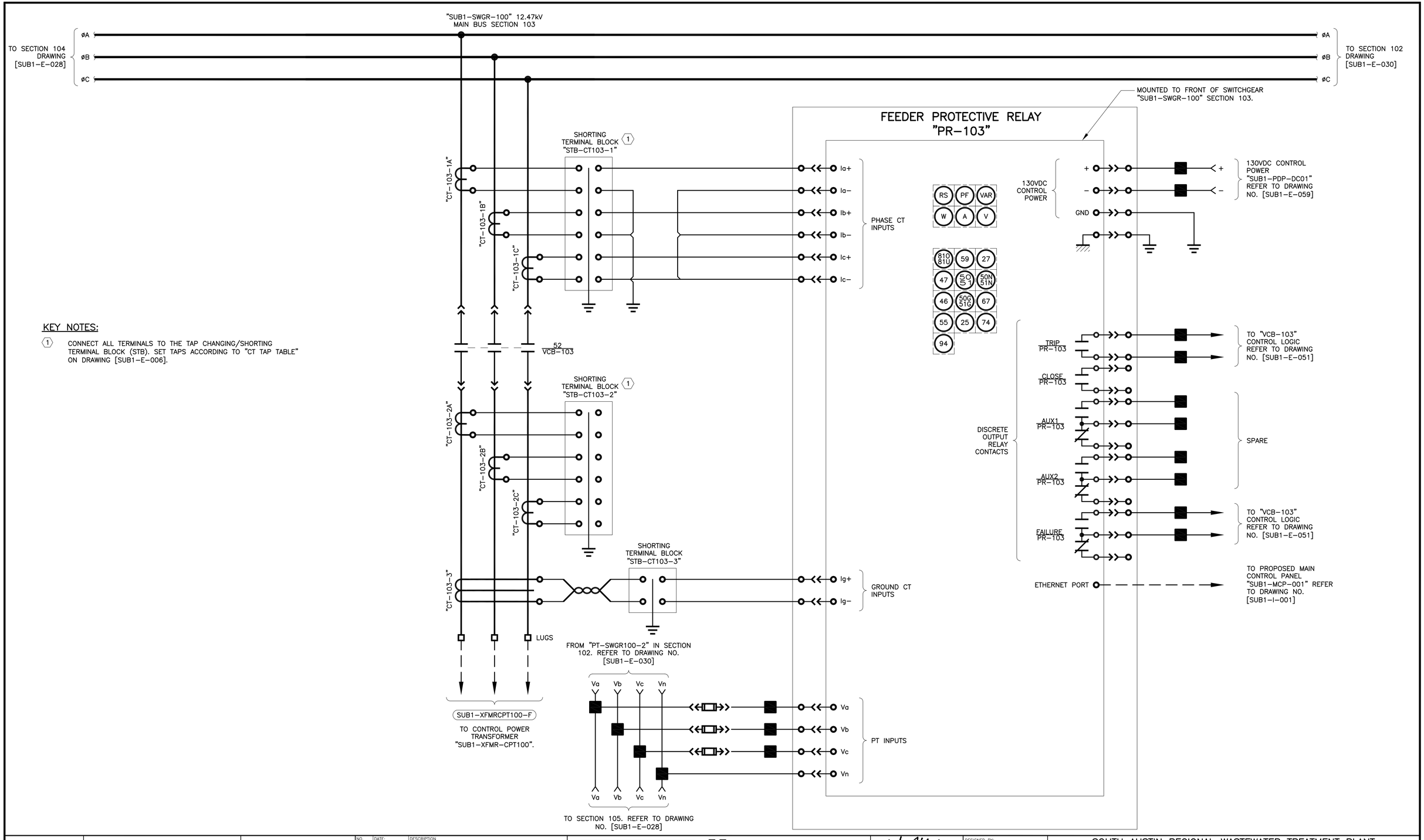

KEY NOTES:

1. CONNECT ALL TERMINALS TO THE TAP CHANGING/SHORTING TERMINAL BLOCK (STB). SET TAPS ACCORDING TO "CT TAP TABLE" ON DRAWING [SUB1-E-006].

BAR LENGTH ON ORIGINAL DRAWING EQUALS ONE INCH, ADJUST SCALE ACCORDINGLY.

REUSE OF DOCUMENTS

This document, and the designs incorporated herein, is an instrument of professional service that has been developed, designed and prepared by Harutunian Engineering, Inc., and is not to be used, in whole or in part, for any other project without giving written notice to Harutunian Engineering, Inc.

NO.	DATE:	DESCRIPTION

HARUTUNIAN ENGINEERING INCORPORATED

TEXAS FIRM REGISTRATION NUMBER F-2408

ENGINEERING AND ENVIRONMENTAL CONSULTANTS
8100 CROSS PARK DRIVE
AUSTIN, TEXAS 78754

STATE OF TEXAS
SHANT HARUTUNIAN
87735
REGISTERED
PROFESSIONAL ENGINEER
10/7/2019

DESIGNED BY:	HEI
CHECKED BY:	HEI
APPROVED BY:	HEI
SUBMITTAL DATE:	OCTOBER 2019
SCALE:	AS SHOWN

SOUTH AUSTIN REGIONAL WASTEWATER TREATMENT PLANT
ELECTRICAL SUBSTATION NO. 1 REPLACEMENT PROJECT
CIP I.D.# 3333.032

SUBSTATION NO. 1 "SUB1-SWGR-100" CONTROL POWER BREAKER THREE LINE DIAGRAM - PROPOSED (SHEET 4 OF 5)

PROJECT NO: 2014-300 | SHT. 630 OF 866 | DWG NO. SUB1-E-029

"SUB1-SWGR-100" 12.47kV
MAIN BUS SECTION 102

"SUB1-SWGR-100" 12.47kV
MAIN BUS SECTION 101

TO SECTION 103 DRAWING [SUB1-E-029]
ØA
ØB
ØC

POWER MONITORING UNIT
USER INTERFACE MODULE
"SUB1-UI-PMU100" (4)

MANUFACTURER PROVIDED CABLE

POWER MONITORING UNIT
"SUB1-PMU-100" (5)

(2) 12.47kV
"PT-SWGR100-2"
120V

130VDC CONTROL POWER CIRCUIT
+
-
130VDC FROM PANEL "SUB1-PDP-DC01". REFER TO PANEL SCHEDULE

ETHERNET PORT
TO PROPOSED MAIN CONTROL PANEL "SUB1-MCP-001" REFER TO DRAWING NO. [SUB1-I-001]

Va
Vb
Vc
GND

kWH
kVAR
kW
A
V

SHORTING TERMINAL BLOCK (1)
"STB-SWGR100-2"

Ia+
Ia-
Ib+
Ib-
Ic+
Ic-
PHASE CT INPUTS

"CT-SWGR100-2A"
"CT-SWGR100-2B"
"CT-SWGR100-2C"

Va
Vb
Vc
Vn
TO "PR-103". REFER TO DRAWING NO. [SUB1-E-029]

SHORTING TERMINAL BLOCK
"STB-SWGR100-3"

TO "PR-105". REFER TO DRAWING NO. [SUB1-E-028]
Ig+
Ig-

"CT-SWGR100-3"

(3) 12.47kV
"PT-SWGR100-1"
120V

Va
Vb
Vc
Vn
TO WATT-HOUR METER "SUB1-WHM-100"

SHORTING TERMINAL BLOCK (1)
"STB-SWGR100-1"

"CT-SWGR100-1A"
"CT-SWGR100-1B"
"CT-SWGR100-1C"

Ia
Ib
Ic
In
TO WATT-HOUR METER "SUB1-WHM-100"

LUGS

SUB1-SWGR100-F1
SUB1-SWGR100-F2
SUB1-SWGR100-F3
SUB1-SWGR100-F4
SUB1-SWGR100-F5
SUB1-SWGR100-F6
12,470V INCOMING FEEDER (BY AUSTIN ENERGY)

KEY NOTES:

1. CONNECT ALL TERMINALS TO THE TAP CHANGING/SHORTING TERMINAL BLOCK (STB). SET TAPS ACCORDING TO "CT TAP TABLE" ON DRAWING [SUB1-E-006].
2. PROPOSED POTENTIAL TRANSFORMER SHALL BE SIZED ACCORDING TO ELECTRICAL SPECIFICATIONS. PROPOSED CALCULATION OF POTENTIAL TRANSFORMER RATING SHALL INCLUDE THE METERING POWER CONSUMPTION OF ALL PROPOSED PROTECTIVE RELAYS/ETC., INTERCONNECTED WITH THE POTENTIAL TRANSFORMER.
3. COORDINATE WITH AUSTIN ENERGY. ALSO REFER TO KEYNOTES THREE AND FOUR, DRAWING [SUB1-E-013] FOR ADDITIONAL INFORMATION.
4. POWER MONITORING UNIT COMBINATION DISPLAY AND KEYPAD USER INTERFACE MODULE. REFER TO THE SPECIFICATIONS FOR ADDITIONAL INFORMATION. MOUNT TO FACE OF PROPOSED SWITCHGEAR SECTION "105".
5. POWER MONITORING UNIT LOCATED ON THE BACK PLANE OF THE CONTROL CABINET IN SECTION "105".

BAR LENGTH ON ORIGINAL DRAWING EQUALS ONE INCH, ADJUST SCALE ACCORDINGLY.

REUSE OF DOCUMENTS

This document, and the designs incorporated herein, is an instrument of professional service that has been developed, designed and prepared by Harutunian Engineering, Inc., and is not to be used, in whole or in part, for any other project without giving written notice to Harutunian Engineering, Inc.

NO.	DATE:	DESCRIPTION

HARUTUNIAN ENGINEERING INCORPORATED
TEXAS FIRM REGISTRATION NUMBER F-2408
ENGINEERING AND ENVIRONMENTAL CONSULTANTS
8100 CROSS PARK DRIVE
AUSTIN, TEXAS 78754

STATE OF TEXAS
SHANT HARUTUNIAN
87735
REGISTERED
PROFESSIONAL ENGINEER
10/7/2019

DESIGNED BY:	HEI
CHECKED BY:	HEI
APPROVED BY:	HEI
SUBMITTAL DATE:	OCTOBER 2019
SCALE:	AS SHOWN

SOUTH AUSTIN REGIONAL WASTEWATER TREATMENT PLANT
ELECTRICAL SUBSTATION NO. 1 REPLACEMENT PROJECT
CIP I.D.# 3333.032

SUBSTATION NO. 1 "SUB1-SWGR-100" INCOMING THREE LINE DIAGRAM - PROPOSED (SHEET 5 OF 5)

PROJECT NO: 2014-300 | SHT. 631 OF 866 | DWG NO. SUB1-E-030

KEY NOTES:

1. CONNECT ALL TERMINALS TO THE TAP CHANGING/SHORTING TERMINAL BLOCK (STB). SET TAPS ACCORDING TO "CT TAP TABLE" ON DRAWING [SUB1–E–006].
2. PROPOSED POTENTIAL TRANSFORMER SHALL BE SIZED ACCORDING TO ELECTRICAL SPECIFICATIONS. PROPOSED CALCULATION OF POTENTIAL TRANSFORMER RATING SHALL INCLUDE THE METERING POWER CONSUMPTION OF ALL PROPOSED PROTECTIVE RELAYS/ETC., INTERCONNECTED WITH THE POTENTIAL TRANSFORMER.
3. COORDINATE WITH AUSTIN ENERGY. ALSO REFER TO KEYNOTES THREE AND FOUR, DRAWING [SUB1–E–014] FOR ADDITIONAL INFORMATION.
4. POWER MONITORING UNIT COMBINATION DISPLAY AND KEYPAD USER INTERFACE MODULE. REFER TO THE SPECIFICATIONS FOR ADDITIONAL INFORMATION. MOUNT TO FACE OF PROPOSED SWITCHGEAR SECTION "205".
5. POWER MONITORING UNIT LOCATED ON THE BACK PLANE OF THE CONTROL CABINET IN SECTION "205".

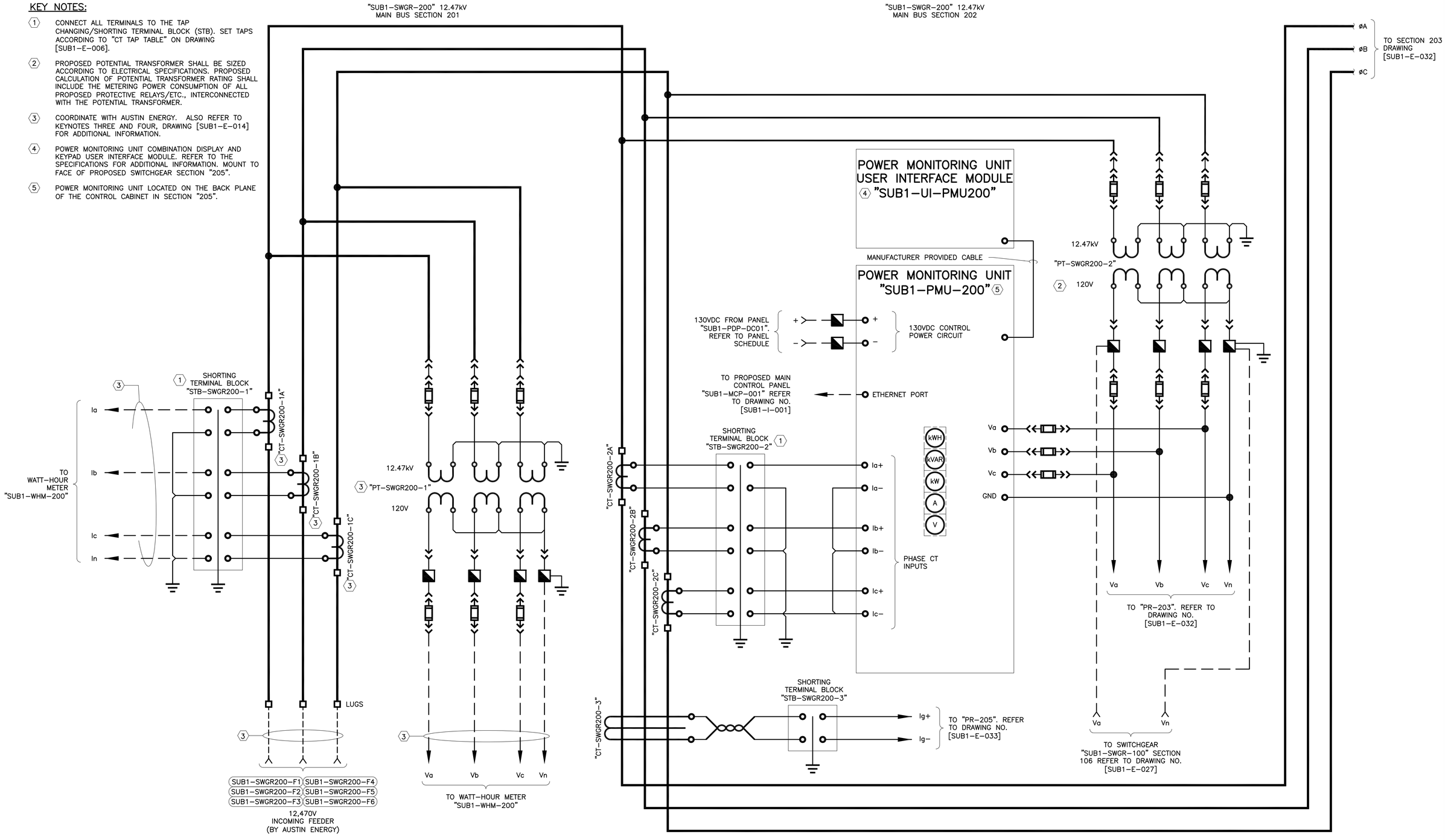

BAR LENGTH ON ORIGINAL DRAWING EQUALS ONE INCH, ADJUST SCALE ACCORDINGLY.

REUSE OF DOCUMENTS

This document, and the designs incorporated herein, is an instrument of professional service that has been developed, designed and prepared by Harutunian Engineering, Inc., and is not to be used, in whole or in part, for any other project without giving written notice to Harutunian Engineering, Inc.

NO.	DATE:	DESCRIPTION

HARUTUNIAN ENGINEERING INCORPORATED
TEXAS FIRM REGISTRATION NUMBER F–2408
ENGINEERING AND ENVIRONMENTAL CONSULTANTS
8100 CROSS PARK DRIVE
AUSTIN, TEXAS 78754

STATE OF TEXAS — SHANT HARUTUNIAN 87735 — REGISTERED PROFESSIONAL ENGINEER — 10/7/2019

DESIGNED BY:	HEI
CHECKED BY:	HEI
APPROVED BY:	HEI
SUBMITTAL DATE:	OCTOBER 2019
SCALE:	AS SHOWN

SOUTH AUSTIN REGIONAL WASTEWATER TREATMENT PLANT
ELECTRICAL SUBSTATION NO. 1 REPLACEMENT PROJECT
CIP I.D.# 3333.032

SUBSTATION NO. 1 "SUB1–SWGR–200" INCOMING THREE LINE DIAGRAM – PROPOSED (SHEET 1 OF 5)

PROJECT NO: 2014–300 | SHT. 632 OF 866 | DWG NO. SUB1–E–031

"SUB1-SWGR-200" 12.47kV
MAIN BUS SECTION 203

TO SECTION 202 DRAWING [SUB1-E-031]

øA
øB
øC

TO SECTION 204 DRAWING [SUB1-E-033]

MOUNTED TO FRONT OF SWITCHGEAR "SUB1-SWGR-200" SECTION 203.

FEEDER PROTECTIVE RELAY
"PR-203"

SHORTING TERMINAL BLOCK "STB-CT203-1" (1)

"CT-203-1A"
"CT-203-1B"
"CT-203-1C"

Ia+
Ia-
Ib+
Ib-
Ic+
Ic-

PHASE CT INPUTS

RS PF VAR
W A V

810 81U 59 27
47 SOTF 50N 51N
46 50G 51G 67
55 25 74
94

130VDC CONTROL POWER

\+
-
GND

130VDC CONTROL POWER "SUB1-PDP-DC01" REFER TO DRAWING NO. [SUB1-E-059]

52 VCB-203

SHORTING TERMINAL BLOCK "STB-CT203-2" (1)

"CT-203-2A"
"CT-203-2B"
"CT-203-2C"

SHORTING TERMINAL BLOCK "STB-CT203-3"

"CT-203-3"

Ig+
Ig-

GROUND CT INPUTS

LUGS

FROM "PT-SWGR200-2" IN SECTION 202. REFER TO DRAWING NO. [SUB1-E-031]

SUB1-XFMRCPT200-F

TO CONTROL POWER TRANSFORMER "SUB1-XFMR-CPT200".

Va Vb Vc Vn

Va
Vb
Vc
Vn

PT INPUTS

TO SECTION 205 REFER TO DRAWING NO. [SUB1-E-033]

DISCRETE OUTPUT RELAY CONTACTS

TRIP PR-203
CLOSE PR-203
AUX1 PR-203
AUX2 PR-203
FAILURE PR-203

TO "VCB-203" CONTROL LOGIC REFER TO DRAWING NO. [SUB1-E-056]

SPARE

TO "VCB-203" CONTROL LOGIC REFER TO DRAWING NO. [SUB1-E-056]

ETHERNET PORT

TO PROPOSED MAIN CONTROL PANEL "SUB1-MCP-001" REFER TO DRAWING NO. [SUB1-I-001]

KEY NOTES:

(1) CONNECT ALL TERMINALS TO THE TAP CHANGING/SHORTING TERMINAL BLOCK (STB). SET TAPS ACCORDING TO "CT TAP TABLE" ON DRAWING [SUB1-E-006].

BAR LENGTH ON ORIGINAL DRAWING EQUALS ONE INCH, ADJUST SCALE ACCORDINGLY.

REUSE OF DOCUMENTS

This document, and the designs incorporated herein, is an instrument of professional service that has been developed, designed and prepared by Harutunian Engineering, Inc., and is not to be used, in whole or in part, for any other project without giving written notice to Harutunian Engineering, Inc.

NO.	DATE:	DESCRIPTION

HARUTUNIAN ENGINEERING INCORPORATED
TEXAS FIRM REGISTRATION NUMBER F-2408
ENGINEERING AND ENVIRONMENTAL CONSULTANTS
8100 CROSS PARK DRIVE
AUSTIN, TEXAS 78754

STATE OF TEXAS
SHANT HARUTUNIAN
87735
REGISTERED PROFESSIONAL ENGINEER
10/7/2019

DESIGNED BY:	HEI
CHECKED BY:	HEI
APPROVED BY:	HEI
SUBMITTAL DATE:	OCTOBER 2019
SCALE:	AS SHOWN

SOUTH AUSTIN REGIONAL WASTEWATER TREATMENT PLANT
ELECTRICAL SUBSTATION NO. 1 REPLACEMENT PROJECT
CIP I.D.# 3333.032

SUBSTATION NO. 1 "SUB1-SWGR-200" CONTROL POWER BREAKER THREE LINE DIAGRAM - PROPOSED (SHEET 2 OF 5)

PROJECT NO: 2014-300 | SHT. 633 OF 866 | DWG NO. SUB1-E-032

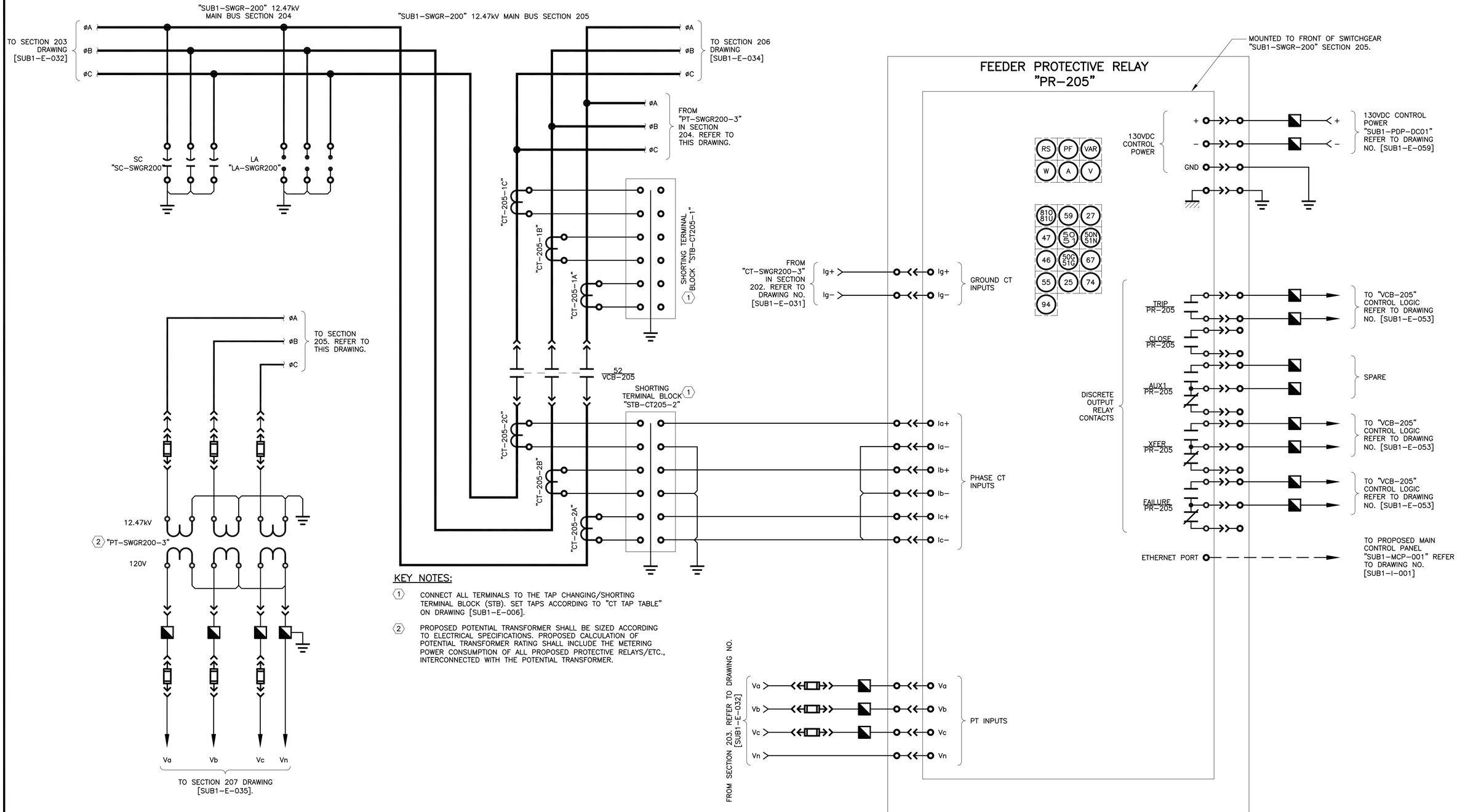

KEY NOTES:

1. CONNECT ALL TERMINALS TO THE TAP CHANGING/SHORTING TERMINAL BLOCK (STB). SET TAPS ACCORDING TO "CT TAP TABLE" ON DRAWING [SUB1-E-006].
2. PROPOSED POTENTIAL TRANSFORMER SHALL BE SIZED ACCORDING TO ELECTRICAL SPECIFICATIONS. PROPOSED CALCULATION OF POTENTIAL TRANSFORMER RATING SHALL INCLUDE THE METERING POWER CONSUMPTION OF ALL PROPOSED PROTECTIVE RELAYS/ETC., INTERCONNECTED WITH THE POTENTIAL TRANSFORMER.

BAR LENGTH ON ORIGINAL DRAWING EQUALS ONE INCH, ADJUST SCALE ACCORDINGLY.

REUSE OF DOCUMENTS

This document, and the designs incorporated herein, is an instrument of professional service that has been developed, designed and prepared by Harutunian Engineering, Inc., and is not to be used, in whole or in part, for any other project without giving written notice to Harutunian Engineering, Inc.

NO.	DATE:	DESCRIPTION

HARUTUNIAN ENGINEERING INCORPORATED
TEXAS FIRM REGISTRATION NUMBER F-2408
ENGINEERING AND ENVIRONMENTAL CONSULTANTS
8100 CROSS PARK DRIVE
AUSTIN, TEXAS 78754

STATE OF TEXAS
SHANT HARUTUNIAN
87735
REGISTERED
PROFESSIONAL ENGINEER
10/7/2019

DESIGNED BY:	HEI
CHECKED BY:	HEI
APPROVED BY:	HEI
SUBMITTAL DATE:	OCTOBER 2019
SCALE:	AS SHOWN

SOUTH AUSTIN REGIONAL WASTEWATER TREATMENT PLANT
ELECTRICAL SUBSTATION NO. 1 REPLACEMENT PROJECT
CIP I.D.# 3333.032

SUBSTATION NO. 1 "SUB1-SWGR-200" MAIN BREAKER THREE LINE DIAGRAM - PROPOSED (SHEET 3 OF 5)

PROJECT NO: 2014-300 | SHT. 634 OF 866 | DWG NO. SUB1-E-033

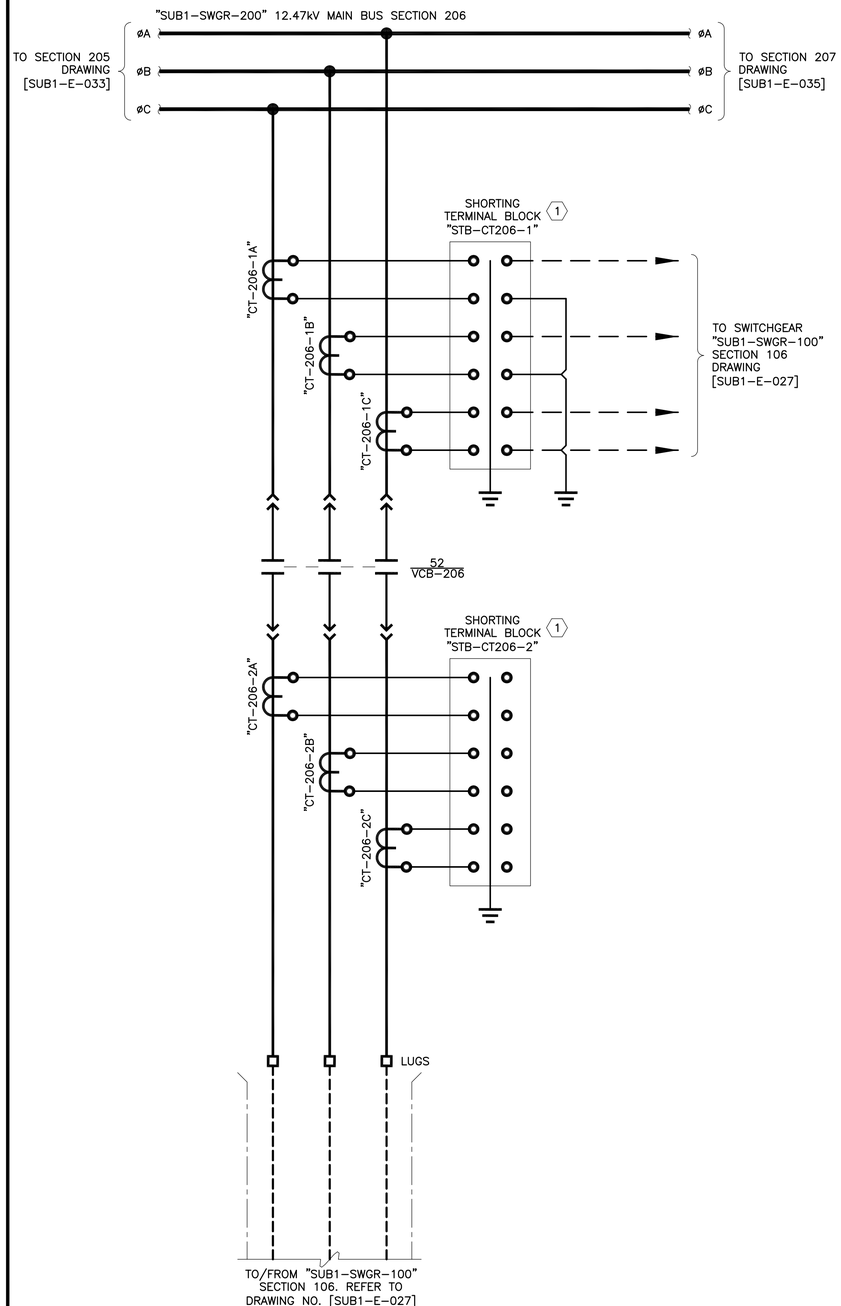

KEY NOTES:

1. CONNECT ALL TERMINALS TO THE TAP CHANGING/SHORTING TERMINAL BLOCK (STB). SET TAPS ACCORDING TO "CT TAP TABLE" ON DRAWING [SUB1–E–006].

BAR LENGTH ON ORIGINAL DRAWING EQUALS ONE INCH, ADJUST SCALE ACCORDINGLY.

REUSE OF DOCUMENTS

This document, and the designs incorporated herein, is an instrument of professional service that has been developed, designed and prepared by Harutunian Engineering, Inc., and is not to be used, in whole or in part, for any other project without giving written notice to Harutunian Engineering, Inc.

NO.	DATE:	DESCRIPTION

HARUTUNIAN ENGINEERING INCORPORATED

TEXAS FIRM REGISTRATION NUMBER F–2408

ENGINEERING AND ENVIRONMENTAL CONSULTANTS
8100 CROSS PARK DRIVE
AUSTIN, TEXAS 78754

STATE OF TEXAS
SHANT HARUTUNIAN
87735
REGISTERED
PROFESSIONAL ENGINEER
10/7/2019

DESIGNED BY:	HEI
CHECKED BY:	HEI
APPROVED BY:	HEI
SUBMITTAL DATE:	OCTOBER 2019
SCALE:	AS SHOWN

SOUTH AUSTIN REGIONAL WASTEWATER TREATMENT PLANT
ELECTRICAL SUBSTATION NO. 1 REPLACEMENT PROJECT
CIP I.D.# 3333.032

SUBSTATION NO. 1 "SUB1–SWGR–200" TIE BREAKER THREE LINE DIAGRAM – PROPOSED (SHEET 4 OF 5)

PROJECT NO: 2014–300 | SHT. 635 OF 866 | DWG NO. SUB1–E–034

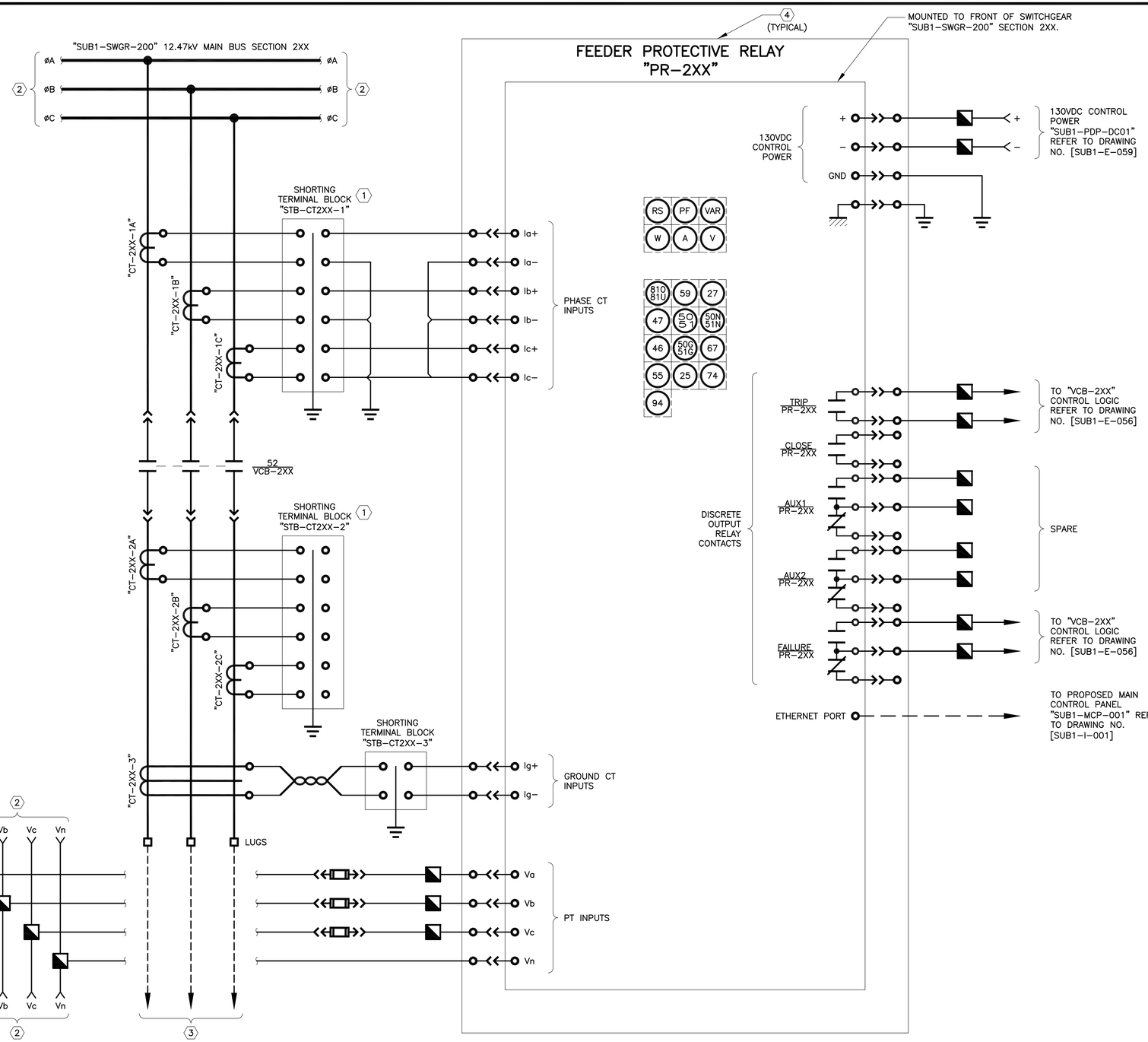

KEY NOTES:

1. CONNECT ALL TERMINALS TO THE TAP CHANGING/SHORTING TERMINAL BLOCK (STB). SET TAPS ACCORDING TO "CT TAP TABLE" ON DRAWING [SUB1–E–006].
2. CONTINUES TO ADJACENT SECTION, REFER TO ONE–LINE DIAGRAM FOR ADDITIONAL INFORMATION.
3. REFER TO ONE–LINE DIAGRAM FOR CONTINUATION AND QUANTITY OF FEEDERS.
4. THIS DRAWING IS TYPICAL FOR MULTIPLE EQUIPMENT. THE ACTUAL TAG FOR EACH EQUIPMENT WILL DIFFER FROM THAT SHOWN HERE. REFER TO THE TAG REPLACEMENT SCHEDULE ON THIS DRAWING TO DERIVE THE CORRESPONDING TAGS FOR EACH PROPOSED EQUIPMENT.

TAG REPLACEMENT TABLE 4

EQUIPMENT DESCRIPTION	1BXX=
FEEDER BREAKER "VCB–207"	207
FEEDER BREAKER "VCB–208"	208
FEEDER BREAKER "VCB–209"	209
FEEDER BREAKER "VCB–210"	210
FEEDER BREAKER "VCB–211"	211
FEEDER BREAKER "VCB–212"	212
FEEDER BREAKER "VCB–213"	213
FEEDER BREAKER "VCB–214"	214
FEEDER BREAKER "VCB–215"	215
FEEDER BREAKER "VCB–216"	216
FEEDER BREAKER "VCB–217"	217

NOTE:
THIS DRAWING IS TYPICAL FOR FEEDER BREAKERS: "SUB1–VCB–207", "SUB1–VCB–208", "SUB1–VCB–209", "SUB1–VCB–210", "SUB1–VCB–211", "SUB1–VCB–212", "SUB1–VCB–213", "SUB1–VCB–214", "SUB1–VCB–215", "SUB1–VCB–216", AND "SUB1–VCB–217".

BAR LENGTH ON ORIGINAL DRAWING EQUALS ONE INCH, ADJUST SCALE ACCORDINGLY.

REUSE OF DOCUMENTS

This document, and the designs incorporated herein, is an instrument of professional service that has been developed, designed and prepared by Harutunian Engineering, Inc., and is not to be used, in whole or in part, for any other project without giving written notice to Harutunian Engineering, Inc.

NO.	DATE:	DESCRIPTION

HARUTUNIAN ENGINEERING INCORPORATED
TEXAS FIRM REGISTRATION NUMBER F–2408
ENGINEERING AND ENVIRONMENTAL CONSULTANTS
8100 CROSS PARK DRIVE
AUSTIN, TEXAS 78754

STATE OF TEXAS · SHANT HARUTUNIAN · 87735 · REGISTERED · PROFESSIONAL ENGINEER
10/7/2019

DESIGNED BY:	HEI
CHECKED BY:	HEI
APPROVED BY:	HEI
SUBMITTAL DATE:	OCTOBER 2019
SCALE:	AS SHOWN

SOUTH AUSTIN REGIONAL WASTEWATER TREATMENT PLANT
ELECTRICAL SUBSTATION NO. 1 REPLACEMENT PROJECT
CIP I.D.# 3333.032

SUBSTATION NO. 1 "SUB1–SWGR–200" TYPICAL FEEDER BREAKER THREE LINE DIAGRAM – PROPOSED (SHEET 5 OF 5)

PROJECT NO: 2014–300 | SHT. 636 OF 866 | DWG NO. SUB1–E–035

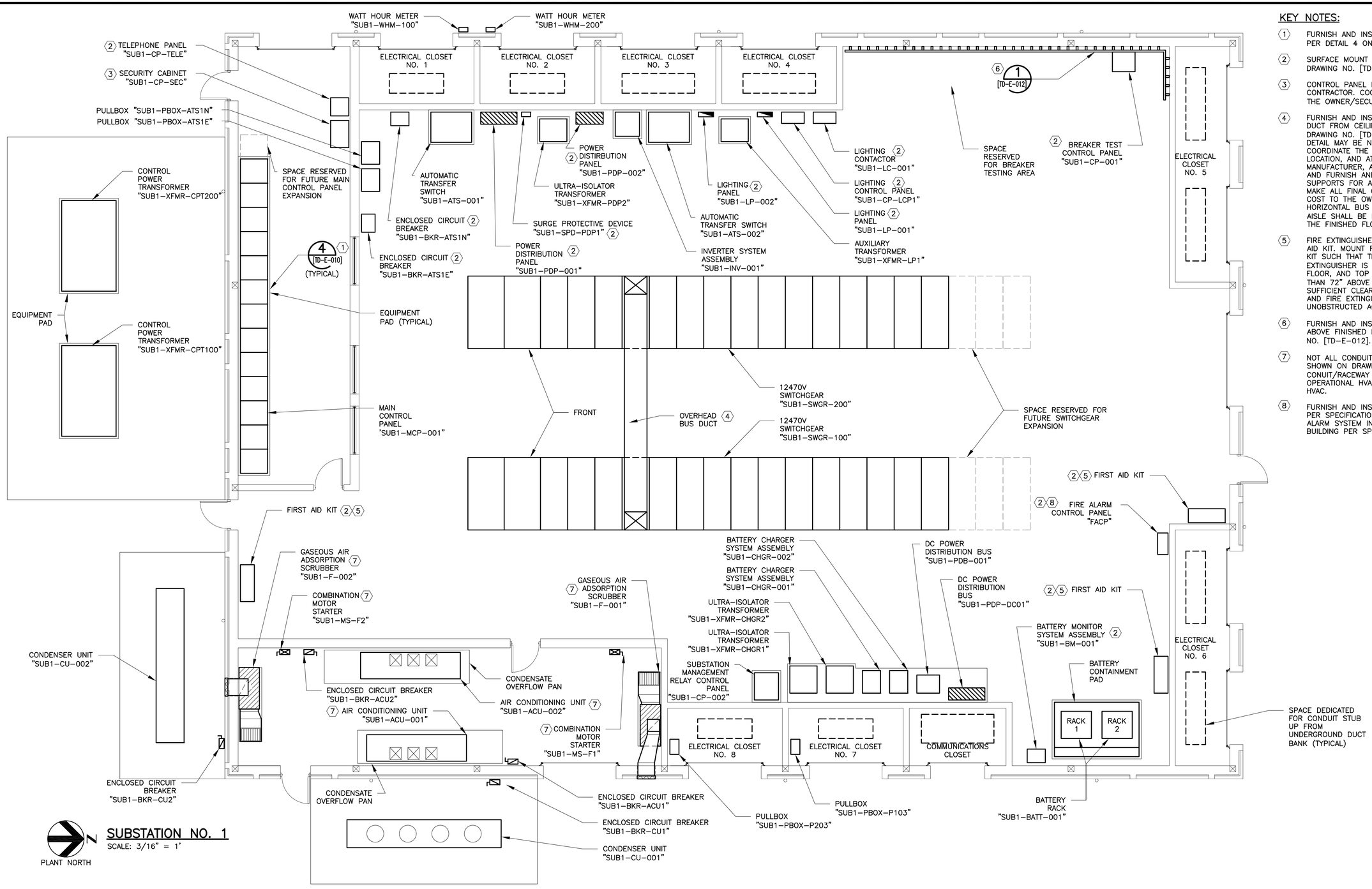

SUBSTATION NO. 1

SCALE: 3/16" = 1'

KEY NOTES:

1. FURNISH AND INSTALL INDOOR EQUIPMENT PAD PER DETAIL 4 ON DRAWING NO. [TD-E-010].
2. SURFACE MOUNT TO WALL PER DETAILS ON DRAWING NO. [TD-E-010].
3. CONTROL PANEL FURNISHED BY SECURITY CONTRACTOR. COORDINATE REQUIREMENTS WITH THE OWNER/SECURITY CONTRACTOR.
4. FURNISH AND INSTALL SUPPORTS TO SUSPEND BUS DUCT FROM CEILING SIMILAR TO DETAILS ON DRAWING NO. [TD-E-004]. MODIFICATION TO THE DETAIL MAY BE NECESSARY. CONTRACTOR TO COORDINATE THE NECESSARY SUPPORT QUANTITY, LOCATION, AND ATTACHMENT WITH THE SWITCHGEAR MANUFACTURER, ADJUST THE DETAIL ACCORDINGLY, AND FURNISH AND INSTALL THE REQUIRED SUPPORTS FOR A SECURE INSTALLATION, AND MAKE ALL FINAL CONNECTIONS AT NO ADDITIONAL COST TO THE OWNER. BOTTOM OF THE HORIZONTAL BUS DUCT SPANNING PERSONNEL AISLE SHALL BE NO LOWER THAN 13'-6" ABOVE THE FINISHED FLOOR.
5. FIRE EXTINGUISHER TO BE MOUNTED BELOW FIRST AID KIT. MOUNT FIRE EXTINGUISHER AND FIRST AID KIT SUCH THAT THE BOTTOM OF FIRE EXTINGUISHER IS MINIMUM 8" ABOVE FINISHED FLOOR, AND TOP OF FIRST AID KIT IS NO MORE THAN 72" ABOVE FINISHED FLOOR. PROVIDE SUFFICIENT CLEARANCE BETWEEN FIRST AID KIT AND FIRE EXTINGUISHER TO ALLOW FOR EASY, UNOBSTRUCTED ACCESS TO FIRE EXTINGUISHER.
6. FURNISH AND INSTALL GROUNDING BUS AT 48" ABOVE FINISHED FLOOR PER DETAIL 1 ON DRAWING NO. [TD-E-012].
7. NOT ALL CONDUIT/RACEWAY FOR HVAC SYSTEM IS SHOWN ON DRAWINGS. FURNISH AND INSTALL CONUIT/RACEWAY REQUIRED FOR A COMPLETE AND OPERATIONAL HVAC SYSTEM. COORDINATE WITH HVAC.
8. FURNISH AND INSTALL FIRE ALARM CONTROL PANEL PER SPECIFICATIONS. FURNISH AND INSTALL FIRE ALARM SYSTEM IN THE SUBSTATION NO. 1 BUILDING PER SPECIFICATIONS.

BAR LENGTH ON ORIGINAL DRAWING EQUALS ONE INCH, ADJUST SCALE ACCORDINGLY.

REUSE OF DOCUMENTS

This document, and the designs incorporated herein, is an instrument of professional service that has been developed, designed and prepared by Harutunian Engineering, Inc., and is not to be used, in whole or in part, for any other project without giving written notice to Harutunian Engineering, Inc.

NO.	DATE:	DESCRIPTION

HARUTUNIAN ENGINEERING INCORPORATED

TEXAS FIRM REGISTRATION NUMBER F-2408

ENGINEERING AND ENVIRONMENTAL CONSULTANTS
8100 CROSS PARK DRIVE
AUSTIN, TEXAS 78754

STATE OF TEXAS — SHANT HARUTUNIAN 87735 — REGISTERED PROFESSIONAL ENGINEER — 10/7/2019

DESIGNED BY:	HEI
CHECKED BY:	HEI
APPROVED BY:	HEI
SUBMITTAL DATE:	OCTOBER 2019
SCALE:	AS SHOWN

SOUTH AUSTIN REGIONAL WASTEWATER TREATMENT PLANT
ELECTRICAL SUBSTATION NO. 1 REPLACEMENT PROJECT
CIP I.D.# 3333.032

SUBSTATION NO. 1
EQUIPMENT LOCATION PLAN – PROPOSED

PROJECT NO: 2014-300 | SHT. 637 OF 866 | DWG NO. SUB1-E-036

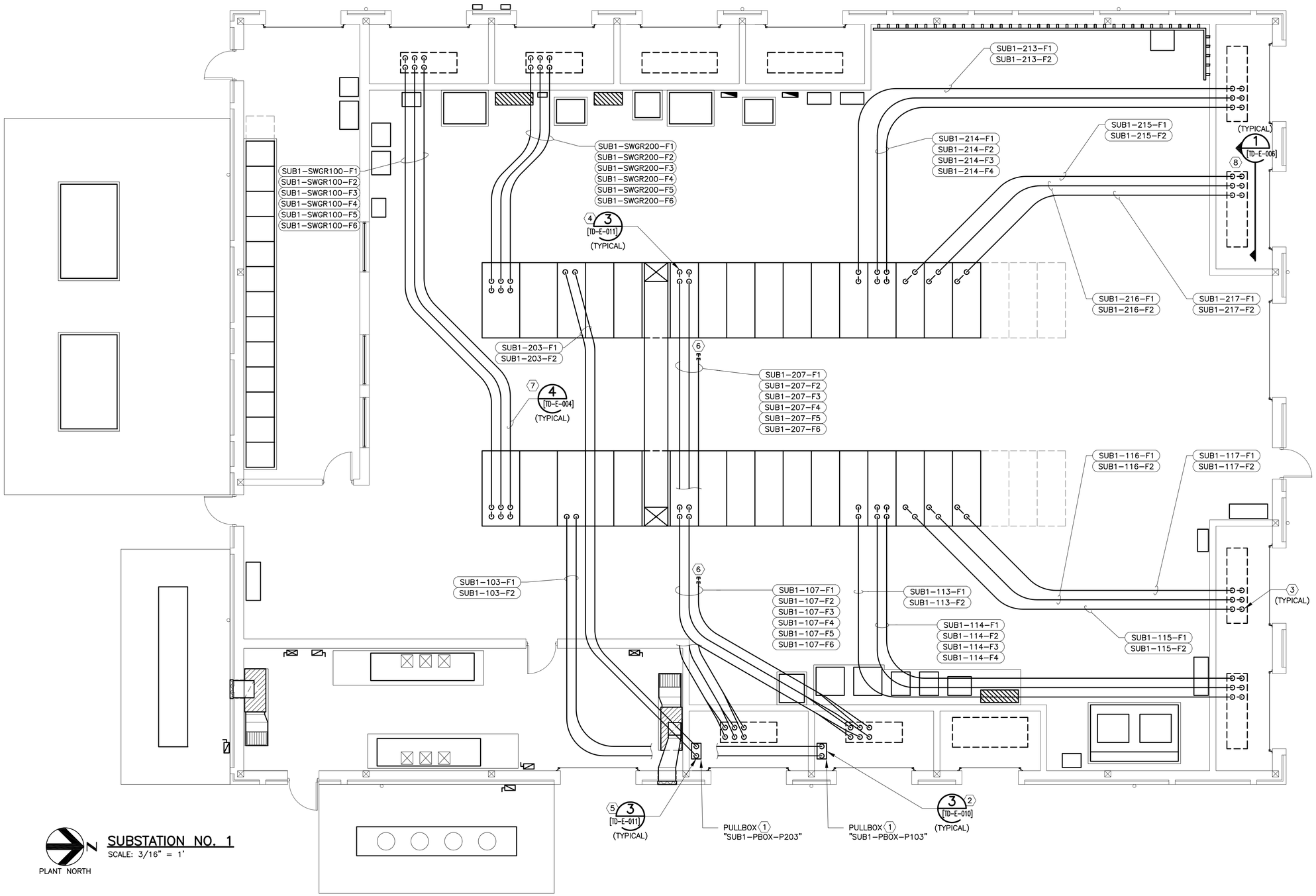

SUBSTATION NO. 1

SCALE: 3/16" = 1'

KEY NOTES:

1. FURNISH AND INSTALL PULLBOX MINIMALLY SIZED 48"H x 20"W x 12" D, PER, AND ACCORDING TO, THE NATIONAL ELECTRICAL CODE (N.E.C.).
2. MOUNT PULLBOX TO WALL PER DETAIL 3 ON DRAWING NO. [TD–E–010].
3. CONDUITS TURN DOWN INTO CABLE CLOSET FROM CEILING SPACE PER DETAILS ON DRAWING NO. [TD–E–006].
4. CONDUIT TURNS DOWN INTO 12470V SWITCHGEAR. COORDINATE EXACT CONDUIT PENETRATION LOCATIONS WITH MANUFACTURER. CONDUIT ENTERS EQUIPMENT PER DETAIL 3 ON DRAWING NO. [TD–E–011].
5. ALTHOUGH SHOWN OTHERWISE ON CABLE CLOSET DETAILS, CONDUIT/WIRE TURNS DOWN AND CONTINUES TO PULLBOX. CONDUIT ENTERS PULLBOX PER DETAIL 3 ON DRAWING NO. [TD–E–011].
6. CAP EMPTY CONDUIT IN CEILING SPACE. LEAVE ADEQUATE DISTANCE SO THAT AN ELBOW MAY BE INSTALLED IN THE FUTURE TO ENTER SWITCHGEAR.
7. MOUNT CONDUIT ON SUSPENDED SUPPORT RACK PER DETAIL 4 ON DRAWING NO, [TD–E–004]. CONDUIT SHALL BE ROUTED WITHIN DEDICATED LAYERS PER DETAIL 4 ON DRAWING NO. [TD–E–003]. COORDINATE WITH OTHER SYSTEMS SHOULD CONDUIT/SUPPORT SYSTEM EXTEND BEYOND DEDICATED LAYERS.
8. ALTHOUGH NOT SHOWN IN THIS VIEW, PROPOSED CONDUIT/WIRE CONTINUES TO/FROM 15KV CABLE CLOSET AND TO/FROM DUCT BANK SYSTEM VIA 15KV CLOSET. THE 15KV CLOSET ELEVATION SHOWN IN THE TYPICAL DETAIL SHALL BE EMPLOYED AS A MINIMUM SET OF GUIDELINE REQUIREMENTS THAT ARE TYPICAL FOR EACH 15KV CABLE CLOSET. THE REFERENCED CLOSET TYPICAL DETAIL DOES NOT DEPICT THE EXACT CONDUIT/WIRE STUB–UP ARRANGEMENT AND THE ENTIRE CONTENTS OF EACH 15KV CLOSET. THE CONTRACTOR SHALL EMPLOY THE CLOSET TYPICAL DETAIL AS A GUIDELINE BASE OF MINIMUM REQUIREMENTS ASSOCIATED WITH EACH 15KV CLOSET.

BAR LENGTH ON ORIGINAL DRAWING EQUALS ONE INCH, ADJUST SCALE ACCORDINGLY.

REUSE OF DOCUMENTS

This document, and the designs incorporated herein, is an instrument of professional service that has been developed, designed and prepared by Harutunian Engineering, Inc., and is not to be used, in whole or in part, for any other project without giving written notice to Harutunian Engineering, Inc.

NO.	DATE:	DESCRIPTION

HARUTUNIAN ENGINEERING INCORPORATED
TEXAS FIRM REGISTRATION NUMBER F–2408
ENGINEERING AND ENVIRONMENTAL CONSULTANTS
8100 CROSS PARK DRIVE
AUSTIN, TEXAS 78754

STATE OF TEXAS — SHANT HARUTUNIAN 87735 — REGISTERED PROFESSIONAL ENGINEER
10/7/2019

DESIGNED BY:	HEI
CHECKED BY:	HEI
APPROVED BY:	HEI
SUBMITTAL DATE:	OCTOBER 2019
SCALE:	AS SHOWN

SOUTH AUSTIN REGIONAL WASTEWATER TREATMENT PLANT
ELECTRICAL SUBSTATION NO. 1 REPLACEMENT PROJECT
CIP I.D.# 3333.032

SUBSTATION NO. 1
15kV CONDUIT ROUTING PLAN – PROPOSED

PROJECT NO: 2014–300 | SHT. 638 OF 866 | DWG NO. SUB1–E–037

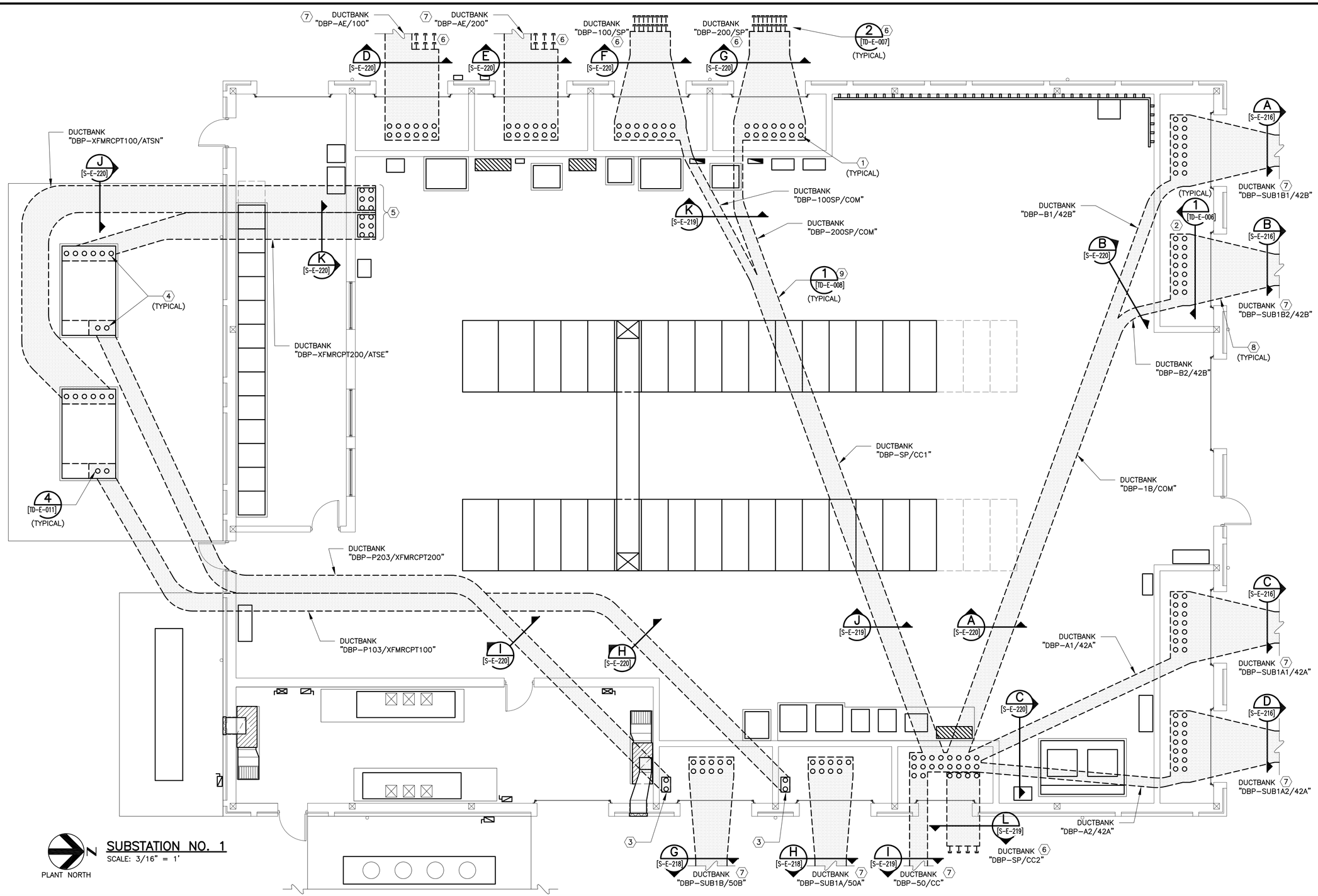

SUBSTATION NO. 1

SCALE: 3/16" = 1'

KEY NOTES:

1. CONDUITS TURN-UP/DOWN INTO CABLE CLOSETS PER DETAILS ON DRAWING NO. [TD-E-006]. TYPICAL FOR ALL CONDUITS IN CABLE CLOSETS.
2. ALTHOUGH NOT SHOWN IN THIS VIEW, PROPOSED CONDUIT/WIRE CONTINUES TO/FROM 15KV CABLE CLOSET AND TO/FROM DUCT BANK SYSTEM VIA 15KV CLOSET. THE 15KV CLOSET ELEVATION SHOWN IN THE TYPICAL DETAIL SHALL BE EMPLOYED AS A MINIMUM SET OF GUIDELINE REQUIREMENTS THAT ARE TYPICAL FOR EACH 15KV CABLE CLOSET. THE REFERENCED CLOSET TYPICAL DETAIL DOES NOT DEPICT THE EXACT CONDUIT/WIRE STUB-UP ARRANGEMENT AND THE ENTIRE CONTENTS OF EACH 15KV CLOSET. THE CONTRACTOR SHALL EMPLOY THE CLOSET TYPICAL DETAIL AS A GUIDELINE BASE OF MINIMUM REQUIREMENTS ASSOCIATED WITH EACH 15KV CLOSET. REFER TO DRAWING NO. [SUB1-E-036] FOR SPECIFIC CABLE CLOSET IDENTIFICATION.
3. CONDUIT/WIRE CONTINUES TO PULLBOX. REFER TO DRAWING NO. [SUB1-E-037] FOR CONTINUATION.
4. CONDUIT/WIRE TURNS UP/DOWN INTO TRANSFORMER. LOCATION SHOWN IS APPROXIMATE, COORDINATE ACTUAL LOCATION WITH EQUIPMENT MANUFACTURER AND MAKE ALL FINAL TERMINATIONS.
5. CONDUIT/WIRE TURNS UP/DOWN INTO PULLBOXES. REFER TO DRAWING NO. [SUB1-E-042] FOR CONTINUATION.
6. DUCTBANK STUB UP AND CAP 10' FROM STRUCTURE PER THE DETAILS ON DRAWING NO. [TD-E-007]. ENTIRE LENGTH OF DUCTBANK IS NOT SHOWN HERE FOR CLARITY.
7. DUCTBANK CONTINUES ON DRAWING NO. [S-E-192].
8. PROPOSED DUCT BANK CONFIGURATION CHANGES IN VICINITY OF BUILDING TO ALLOW FOR CONDUIT STUB-UPS.
9. SPACE AND ENCASE CONDUIT IN CONCRETE DUCT BANK PER DETAILS ON DRAWING NO. [TD-E-008].

BAR LENGTH ON ORIGINAL DRAWING EQUALS ONE INCH, ADJUST SCALE ACCORDINGLY.

REUSE OF DOCUMENTS

This document, and the designs incorporated herein, is an instrument of professional service that has been developed, designed and prepared by Harutunian Engineering, Inc., and is not to be used, in whole or in part, for any other project without giving written notice to Harutunian Engineering, Inc.

NO.	DATE:	DESCRIPTION

HARUTUNIAN ENGINEERING INCORPORATED

TEXAS FIRM REGISTRATION NUMBER F-2408

ENGINEERING AND ENVIRONMENTAL CONSULTANTS
8100 CROSS PARK DRIVE
AUSTIN, TEXAS 78754

STATE OF TEXAS — SHANT HARUTUNIAN 87735 — REGISTERED PROFESSIONAL ENGINEER — 10/7/2019

DESIGNED BY:	HEI
CHECKED BY:	HEI
APPROVED BY:	HEI
SUBMITTAL DATE:	OCTOBER 2019
SCALE:	AS SHOWN

SOUTH AUSTIN REGIONAL WASTEWATER TREATMENT PLANT
ELECTRICAL SUBSTATION NO. 1 REPLACEMENT PROJECT
CIP I.D.# 3333.032

SUBSTATION NO. 1

UNDERGROUND DUCTBANK PLAN – PROPOSED

PROJECT NO: 2014-300 | SHT. 639 OF 866 | DWG NO. SUB1-E-038

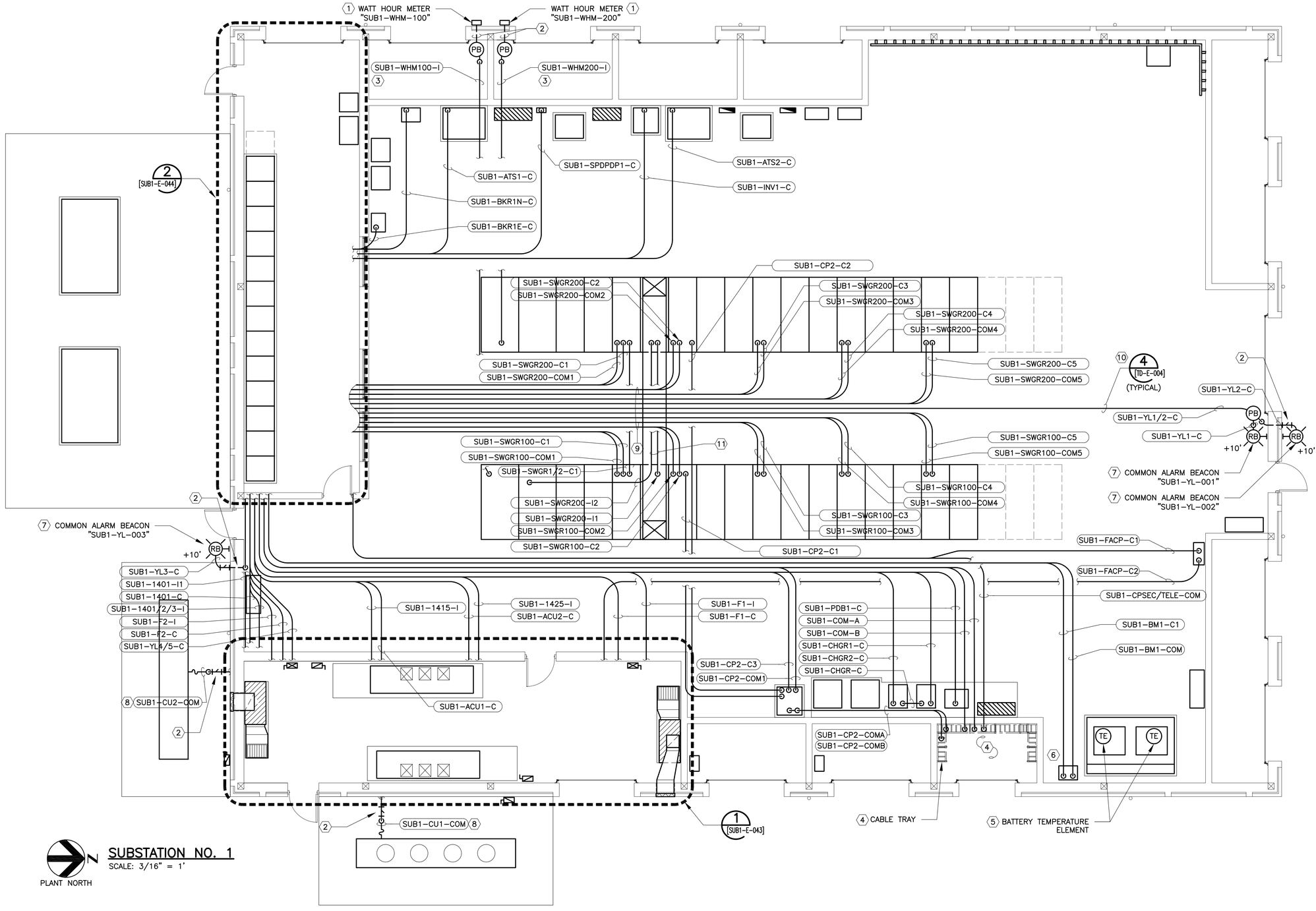

PLANT NORTH

SUBSTATION NO. 1

SCALE: 3/16" = 1'

KEY NOTES:

1. SURFACE MOUNT WATT HOUR METER ENCLOSURE IN ACCORDANCE WITH THE DETAIL 3 ON DRAWING NO. [TD-E-010]. COORDINATE WITH AUSTIN ENERGY. MAKE ALL FINAL CONNECTIONS PER THE RECOMMENDATIONS AND WIRING DIAGRAMS PROVIDED BY AUSTIN ENERGY. ADHERE TO REQUIREMENTS OF THE NATIONAL ELECTRICAL CODE (N.E.C) AND SPECIFICATIONS.
2. FURNISH AND INSTALL SEALING FITTING. PROPOSED CONDUIT/WIRE PENETRATES THROUGH STRUCTURAL WALL ACCORDING TO THE DETAIL 4 ON DRAWING NO. [TD-E-009]. ALTHOUGH SHOWN ON THE EXTERIOR OF THE, SEALING FITTING MAY BE THE FIRST COUPLING ON THE INTERIOR OR EXTERIOR OF THE CONDUIT PENETRATION.
3. CONDUIT RUN BETWEEN AUSTIN ENERGY METERING CANS AND CT ENCLOSURES (12.5kV METERING SECTION) SHALL NOT HAVE MORE THAN TWO (2) 90 DEGREE BENDS AND NOT MORE THAN TWO (2) CONDULETS. CONDULETS SHALL BE NO HIGHER THAN 10 FEET ABOVE FINISHED GRADE. COORDINATE CONDUIT RUN WITH AUSTIN ENERGY. IN ADDITION TO THE CONTENTS FROM THE CONDUIT SCHEDULE, PLEASE FURNISH AND INSTALL CONDUIT MEASURING TAPE WITHIN CONDUIT.
4. REFER TO DETAIL 3 ON DRAWING [TD-E-012] FOR ADDITIONAL INFORMATION REGARDING COMMUNICATION CLOSET RACKING SYSTEM.
5. BATTERY TEMPERATURE ELEMENT, DEDICATED FOR INTERCONNECTION WITH BATTERY CHARGER. REFER TO DC AUXILIARY ONE-LINE DIAGRAM ON DRAWING NO. [SUB1-E-023] FOR ADDITIONAL INFORMATION.
6. ALTHOUGH NOT SHOWN HERE FOR CLARITY, FURNISH AND INSTALL CONDUITS/WIRE TAGGED "SUB1-BATT1-C1", "SUB1-BATT1-C2", "SUB1-BM1-C2A", AND "SUB1-BM1-C2B" INTERCONNECTING BATTERY SYSTEM COMPONENTS AS SHOWN ON DRAWING NO. [SUB1-E-023]. ROUTE ALONG WALL PER DETAIL 1 ON DRAWING NO. [TD-E-004].
7. FURNISH AND INSTALL ALARM BEACON PER DETAIL 3 ON DRAWING NO. [TD-E-009].
8. CONDUIT ENTRY LOCATION IS APPROXIMATE. COORDINATE WITH EQUIPMENT MANUFACTURER TO DETERMINE ACTUAL CONDUIT ENTRY LOCATIONS AND MAKE ALL FINAL TERMINATIONS.
9. CONDUIT ROUTED ABOVE BUS DUCT.
10. FURNISH AND INSTALL PROPOSED CONDUIT/WIRE SUSPENDED IN THE CEILING SPACE PER THE DETAILS SHOWN ON DRAWING [TD-E-004]. CONDUIT/WIRE ROUTING SHOWN SEPARATED SCHEMATICALLY FOR CLARITY, ROUTE IN CONDUIT BANKS (NOT SHOWN). CONDUIT MOUNTING ELEVATIONS ABOVE FINISHED FLOOR SHALL COMPLY WITH THE CONDUIT/SYSTEMS LAYERING CONCEPT SHOWN ON DRAWING [TD-E-003]. COORDINATE WITH OTHER SYSTEMS SHOULD CONDUIT/SUPPORT SYSTEMS EXTEND BEYOND DEDICATED LAYERS.
11. CONDUIT SUSPENDED FROM BOTTOM OF BUS DUCT SUPPORT RACK.

BAR LENGTH ON ORIGINAL DRAWING EQUALS ONE INCH, ADJUST SCALE ACCORDINGLY.

REUSE OF DOCUMENTS

This document, and the designs incorporated herein, is an instrument of professional service that has been developed, designed and prepared by Harutunian Engineering, Inc., and is not to be used, in whole or in part, for any other project without giving written notice to Harutunian Engineering, Inc.

NO.	DATE:	DESCRIPTION

HARUTUNIAN ENGINEERING INCORPORATED

TEXAS FIRM REGISTRATION NUMBER F-2408

ENGINEERING AND ENVIRONMENTAL CONSULTANTS
8100 CROSS PARK DRIVE
AUSTIN, TEXAS 78754

STATE OF TEXAS · SHANT HARUTUNIAN · 87735 · REGISTERED · PROFESSIONAL ENGINEER
1/7/2019

DESIGNED BY:	HEI
CHECKED BY:	HEI
APPROVED BY:	HEI
SUBMITTAL DATE:	OCTOBER 2019
SCALE:	AS SHOWN

SOUTH AUSTIN REGIONAL WASTEWATER TREATMENT PLANT
ELECTRICAL SUBSTATION NO. 1 REPLACEMENT PROJECT
CIP I.D.# 3333.032

SUBSTATION NO. 1
I&C PLAN – PROPOSED

PROJECT NO: 2014-300 | SHT. 640 OF 866 | DWG NO. SUB1-E-039

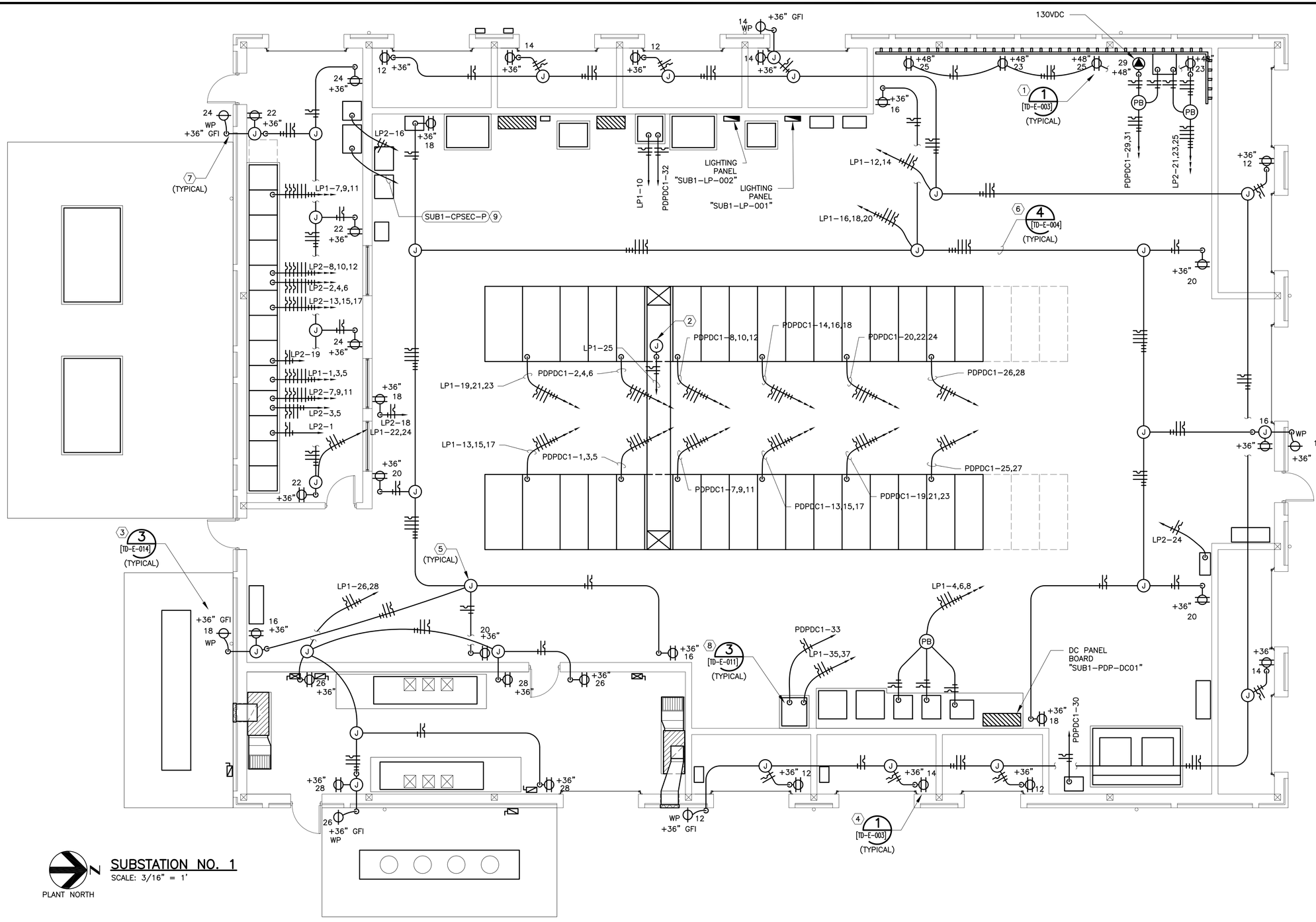

KEY NOTES:

1. SURFACE MOUNT RECEPTACLES WITHIN BREAKER TEST AREA ON LIGHTING PANEL "SUB1-LP-002" CIRCUIT #21 AND DC PANEL "SUB1-PDP-DC01" CIRCUIT #29 PER DETAIL 1 ON DRAWING NO. [TD-E-003].
2. BUS DUCT SPACE HEATER TERMINAL JUNCTION BOX LOCATION IS APPROXIMATE. COORDINATE LOCATION WITH MANUFACTURER.
3. FURNISH AND INSTALL SIMPLEX RECEPTACLE PER DETAIL 3 ON DRAWING NO. [TD-E-014]. FURNISH AND INSTALL SURFACE MOUNTED ON EXTERIOR WALL. TYPICAL FOR ALL EXTERIOR LOCATED SIMPLEX RECEPTACLES. FURNISH AND INSTALL DEDICATED CIRCUITING CONDUCTORS BETWEEN SIMPLEX RECEPTACLES AND JUNCTION BOX LOCATED IN INTERIOR BUILDING CEILING SPACE DESCRIBED IN KEYNOTE 5. SIMPLEX RECEPTACLE DEDICATED CONDUCTORS ROUTE THROUGH IMMEDIATELY ADJACENT INTERIOR LOCATED DUPLEX CONVENIENCE RECEPTACLE DEVICE ENCLOSURE TO SPLICE IN DEDICATED JUNCTION BOX LOCATED IN INTERIOR BUILDING CEILING SPACE DESCRIBED IN KEYNOTE 5. DO NOT SPLICE SIMPLEX RECEPTACLE CIRCUITING INSIDE OF INTERIOR LOCATED DUPLEX CONVENIENCE RECEPTACLE DEVICE ENCLOSURE.
4. SURFACE MOUNT RECEPTACLE PER DETAIL 1 ON DRAWING NO. [TD-E-003]. TYPICAL OF ALL RECEPTACLES UNLESS OTHERWISE NOTED.
5. FURNISH AND INSTALL JUNCTION BOX FOR SPLICING RECEPTACLE CABLE/WIRE IN CEILING SPACE OF SUBSTATION BUILDING.
6. MOUNT CONDUIT ON SUSPENDED SUPPORT RACK PER DETAIL 4 ON DRAWING NO, [TD-E-004]. CONDUIT SHALL BE ROUTED WITHIN DEDICATED LAYERS PER DETAIL 4 ON DRAWING NO. [TD-E-003]. COORDINATE WITH OTHER SYSTEMS SHOULD CONDUIT/SUPPORT SYSTEM EXTEND BEYOND DEDICATED LAYERS.
7. FURNISH AND INSTALL SEALING FITTING. PROPOSED CONDUIT/WIRE PENETRATES THROUGH STRUCTURAL WALL ACCORDING TO THE DETAIL 4 ON DRAWING NO. [TD-E-009]. ALTHOUGH NOT SHOWN, SEALING FITTING MAY BE THE FIRST COUPLING ON THE INTERIOR OR EXTERIOR OF THE CONDUIT PENETRATION.
8. CONDUIT/WIRE ENTERS EQUIPMENT PER DETAIL 3 ON DRAWING NO. [TD-E-011]. COORDINATE CONDUIT ENTRY LOCATION WITH EQUIPMENT MANUFACTURER.
9. CONDUIT HOMERUN CONTINUES TO LIGHTING PANEL "SUB1-LP-001"

SUBSTATION NO. 1

SCALE: 3/16" = 1'

PLANT NORTH

BAR LENGTH ON ORIGINAL DRAWING EQUALS ONE INCH, ADJUST SCALE ACCORDINGLY.

REUSE OF DOCUMENTS

This document, and the designs incorporated herein, is an instrument of professional service that has been developed, designed and prepared by Harutunian Engineering, Inc., and is not to be used, in whole or in part, for any other project without giving written notice to Harutunian Engineering, Inc.

NO.	DATE:	DESCRIPTION

HARUTUNIAN ENGINEERING INCORPORATED
TEXAS FIRM REGISTRATION NUMBER F-2408
ENGINEERING AND ENVIRONMENTAL CONSULTANTS
8100 CROSS PARK DRIVE
AUSTIN, TEXAS 78754

STATE OF TEXAS
SHANT HARUTUNIAN
87735
REGISTERED
PROFESSIONAL ENGINEER
10/7/2019

DESIGNED BY:	HEI
CHECKED BY:	HEI
APPROVED BY:	HEI
SUBMITTAL DATE:	OCTOBER 2019
SCALE:	AS SHOWN

SOUTH AUSTIN REGIONAL WASTEWATER TREATMENT PLANT
ELECTRICAL SUBSTATION NO. 1 REPLACEMENT PROJECT
CIP I.D.# 3333.032

SUBSTATION NO. 1
AUXILIARY AND RECEPTACLE PLAN – PROPOSED

PROJECT NO: 2014-300 | SHT. 641 OF 866 | DWG NO. SUB1-E-040

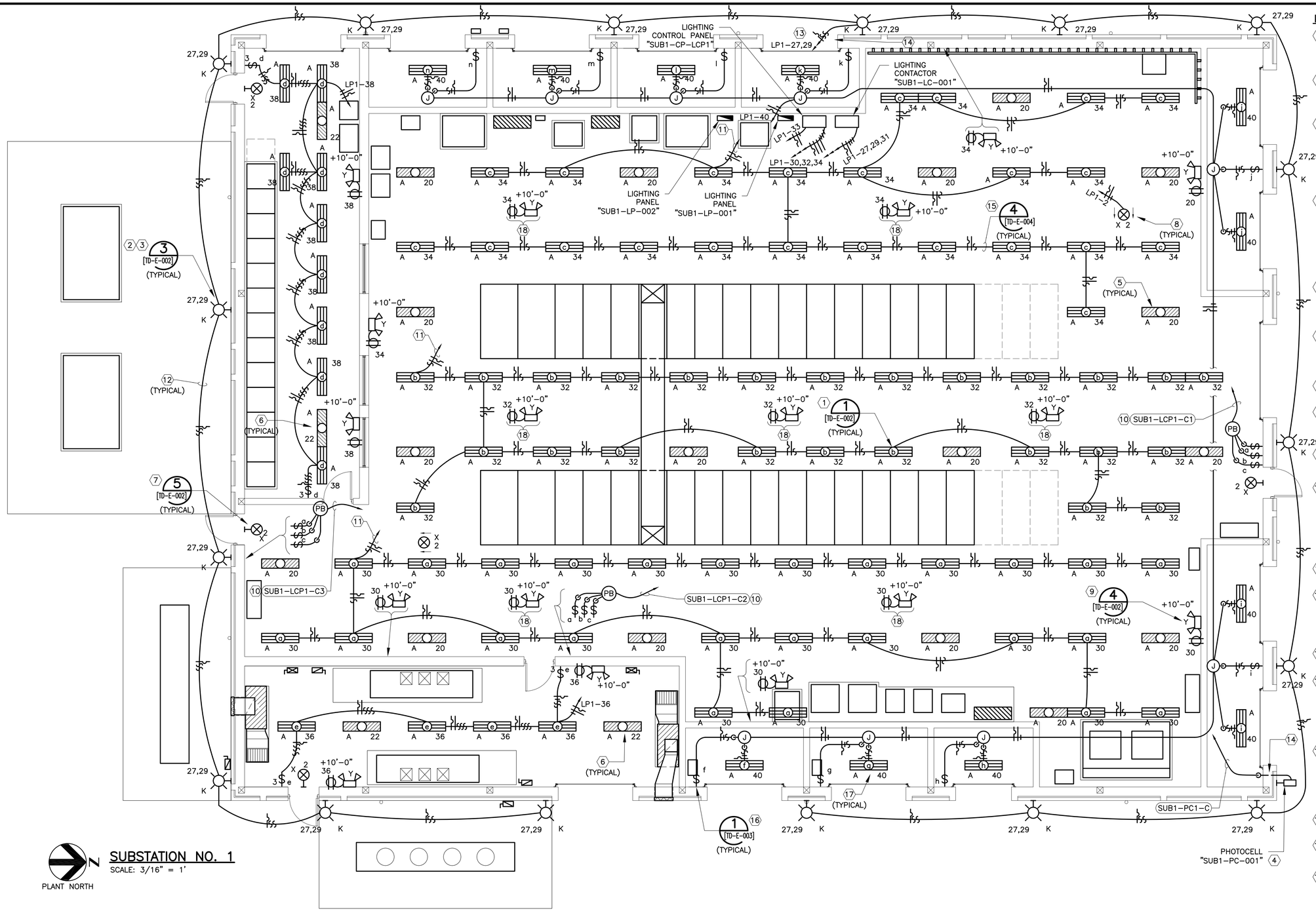

SUBSTATION NO. 1

SCALE: 3/16" = 1'

PLANT NORTH

KEY NOTES:

1. SUSPEND FIXTURES FROM CEILING AT +10'-0" ABOVE FINISHED GRADE PER DETAIL 1 ON DRAWING NO. [TD-E-002]. TYPICAL FOR ALL TYPE "A" FIXTURES.
2. SURFACE MOUNT FIXTURE TO WALL AT +10'-0" ABOVE FINISHED GRADE PER THE DETAIL 3 ON DRAWING NO. [TD-E-002]. TYPICAL FOR ALL TYPE "K" FIXTURES.
3. ALL TYPE "K" 208V EXTERIOR PERIMETER FIXTURES ARE ON THE SAME CIRCUIT AND ARE CONTROLLED BY PHOTOCELL "SUB1-PC-001". REFER TO PANELBOARD SCHEDULE FOR ADDITIONAL INFORMATION. ALSO REFER TO SUBSTATION NO. 1 LIGHTING CONTACTOR CONTROL WIRING SCHEMATIC ON DRAWING NO. [SUB1-E-065] FOR ADDITIONAL INFORMATION.
4. PHOTOCELL, MOUNTED AT 10'-0", ROUTE CONDUIT THROUGH EXTERIOR WALL AND TO LIGHTING CONTACTOR "SUB1-LC-001" ON WEST WALL OF MAIN ELECTRICAL SPACE. ENTIRE ROUTE OF PROPOSED CONDUIT/WIRE IS NOT SHOWN FOR CLARITY. ALSO REFER TO SUBSTATION NO. 1 LIGHTING CONTACTOR CONTROL WIRING SCHEMATIC ON DRAWING NO. [SUB1-E-065] FOR ADDITIONAL INFORMATION.
5. ALL UNSWITCHED SECURITY LIGHTS AND EMERGENCY LIGHTS IN THE MAIN ELECTRICAL SPACE ARE ON CIRCUIT LP2-20. NOT ALL CIRCUITING SHOWN FOR CLARITY. SEPARATE HOMERUNS SHOWN FOR CLARITY.
6. ALL UNSWITCHED SECURITY LIGHTS AND EMERGENCY LIGHTS IN THE CONTROL SPACE AND MECHANICAL SPACE ARE ON CIRCUIT LP2-22. NOT ALL CIRCUITING SHOWN FOR CLARITY. SEPARATE HOMERUNS SHOWN FOR CLARITY.
7. "X" TYPE LIGHT MOUNTED TO WALL ABOVE DOOR PER DETAIL 5 ON DRAWING NO. [TD-E-002].
8. FURNISH AND INSTALL ALL REQUIRED ACCESSORIES FOR PENDANT MOUNTED EXIT LIGHT. EXIT SIGNS SHALL HAVE DIRECTIONAL ARROWS AS SHOWN ON PLANS.
9. "Y" TYPE BACKUP BATTERY LIGHT FIXTURES MOUNTED ON WALL PER DETAIL 4 ON DRAWING NO. [TD-E-002].
10. ALL LIGHT SWITCHES IN THE MAIN ELECTRICAL SPACE ARE MOMENTARY TYPE SWITCHES AND ARE WIRED TO THE LIGHTING CONTROL PANEL "SUB1-CP-LPC1". REFER TO CONTROL WIRING SCHEMATIC ON DRAWING NO. [SUB1-E-063]. CONDUIT/WIRE FROM EACH SWITCH COMBINE IN PULLBOX AND CONTINUES TO LIGHTING CONTROL PANEL "SUB1-CP-LCP1".
11. CONDUIT/WIRE CONTINUES TO LIGHTING CONTROL PANEL "SUB1-CP-LCP1".
12. CONDUIT/WIRE SHOWN OUTSIDE STRUCTURE FOR PURPOSES OF CLARITY. ALL ACTUAL ROUTES ARE WITHIN CONFINES OF STRUCTURE. ALTHOUGH NOT SHOWN ON THE PLAN, FURNISH AND INSTALL JUNCTION BOX ON INTERIOR OF STRUCTURE FOR EACH LIGHT FIXTURE.
13. CONDUIT/WIRE CONTINUES TO LIGHTING CONTACTOR "SUB1-LC-001".
14. FURNISH AND INSTALL SEALING FITTING. PROPOSED CONDUIT/WIRE PENETRATES THROUGH STRUCTURAL WALL ACCORDING TO THE DETAIL 4 ON DRAWING NO. [TD-E-009]. ALTHOUGH NOT SHOWN, SEALING FITTING MAY BE THE FIRST COUPLING ON THE INTERIOR OR EXTERIOR OF THE CONDUIT PENETRATION.
15. MOUNT CONDUIT ON SUSPENDED SUPPORT RACK PER DETAIL 4 ON DRAWING NO, [TD-E-004]. CONDUIT SHALL BE ROUTED WITHIN DEDICATED LAYERS PER DETAIL 4 ON DRAWING NO. [TD-E-003]. COORDINATE WITH OTHER SYSTEMS SHOULD CONDUIT/SUPPORT SYSTEM EXTEND BEYOND DEDICATED LAYERS.
16. SURFACE MOUNT LIGHT SWITCHES SIMILAR TO DETAIL 1 ON DRAWING NO. [TD-E-003].
17. SUSPEND LIGHT FIXTURES SO THAT THEY WILL NOT INTERFERE WITH CABLE PULLING IN THE CLOSET. TYPICAL FOR ALL FIXTURES IN CABLE CLOSETS.
18. SUSPEND LIGHT FIXTURES 11'-0" ABOVE FINISHED FLOOR PER DETAIL 2 ON DRAWING NO. [TD-E-002].

BAR LENGTH ON ORIGINAL DRAWING EQUALS ONE INCH, ADJUST SCALE ACCORDINGLY.

REUSE OF DOCUMENTS

This document, and the designs incorporated herein, is an instrument of professional service that has been developed, designed and prepared by Harutunian Engineering, Inc., and is not to be used, in whole or in part, for any other project without giving written notice to Harutunian Engineering, Inc.

NO.	DATE:	DESCRIPTION

HARUTUNIAN ENGINEERING INCORPORATED

TEXAS FIRM REGISTRATION NUMBER F-2408

ENGINEERING AND ENVIRONMENTAL CONSULTANTS
8100 CROSS PARK DRIVE
AUSTIN, TEXAS 78754

STATE OF TEXAS — SHANT HARUTUNIAN 87735 — REGISTERED PROFESSIONAL ENGINEER — 10/7/2019

DESIGNED BY:	HEI
CHECKED BY:	HEI
APPROVED BY:	HEI
SUBMITTAL DATE:	OCTOBER 2019
SCALE:	AS SHOWN

SOUTH AUSTIN REGIONAL WASTEWATER TREATMENT PLANT
ELECTRICAL SUBSTATION NO. 1 REPLACEMENT PROJECT
CIP I.D.# 3333.032

SUBSTATION NO. 1
LIGHTING PLAN – PROPOSED

PROJECT NO: 2014-300 | SHT. 642 OF 866 | DWG NO. SUB1-E-041

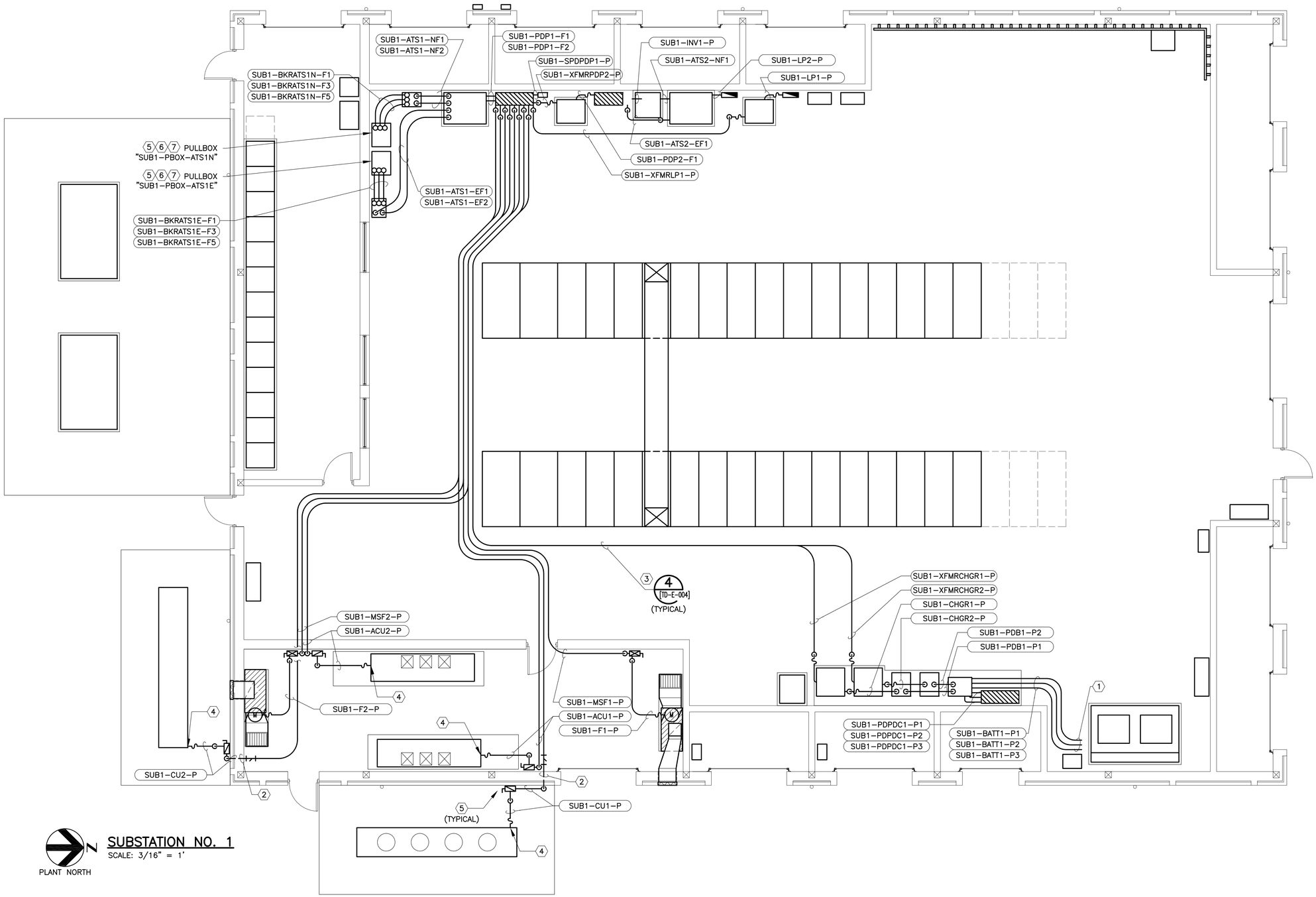

SUBSTATION NO. 1

SCALE: 3/16" = 1'

KEY NOTES:

1. TERMINATE CONDUIT WITH GROUNDING BUSHING PER SPECIFICATIONS. CABLE/WIRE CONTINUES TO BATTERY RACK. COORDINATE CABLE/WIRE TERMINATION WITH MANUFACTURER.
2. FURNISH AND INSTALL SEALING FITTING. PROPOSED CONDUIT/WIRE PENETRATES THROUGH STRUCTURAL WALL ACCORDING TO THE DETAIL 4 ON DRAWING NO. [TD–E–009]. ALTHOUGH SHOWN ON THE INTERIOR OF THE BUILDING, SEALING FITTING MAY BE THE FIRST COUPLING ON THE INTERIOR OR EXTERIOR OF THE CONDUIT PENETRATION.
3. MOUNT CONDUIT ON SUSPENDED SUPPORT RACK PER DETAIL 4 ON DRAWING NO, [TD–E–004]. CONDUIT SHALL BE ROUTED WITHIN DEDICATED LAYERS PER DETAIL 4 ON DRAWING NO. [TD–E–003]. COORDINATE WITH OTHER SYSTEMS SHOULD CONDUIT/SUPPORT SYSTEM EXTEND BEYOND DEDICATED LAYERS.
4. CONDUIT ENTRY LOCATION IS APPROXIMATE. COORDINATE WITH EQUIPMENT MANUFACTURER TO DETERMINE ACTUAL CONDUIT ENTRY LOCATIONS AND MAKE ALL FINAL TERMINATIONS.
5. MOUNT TO WALL PER DETAILS ON DRAWING NO. [TD–E–010].
6. FURNISH AND INSTALL PULLBOX MINIMALLY SIZED 48"H x 30"W x 24" D, PER, AND ACCORDING TO, THE NATIONAL ELECTRICAL CODE (N.E.C.).
7. ALTHOUGH NOT SHOWN HERE, CONDUIT/WIRE EXTENDS FROM PULLBOX TO UNDERGROUND DUCTBANK, REFER TO DRAWING NO. [SUB1–E–038] FOR CONTINUATION.

BAR LENGTH ON ORIGINAL DRAWING EQUALS ONE INCH, ADJUST SCALE ACCORDINGLY.

REUSE OF DOCUMENTS

This document, and the designs incorporated herein, is an instrument of professional service that has been developed, designed and prepared by Harutunian Engineering, Inc., and is not to be used, in whole or in part, for any other project without giving written notice to Harutunian Engineering, Inc.

NO.	DATE:	DESCRIPTION

HARUTUNIAN ENGINEERING INCORPORATED

TEXAS FIRM REGISTRATION NUMBER F–2408

ENGINEERING AND ENVIRONMENTAL CONSULTANTS
8100 CROSS PARK DRIVE
AUSTIN, TEXAS 78754

STATE OF TEXAS · SHANT HARUTUNIAN 87735 · REGISTERED PROFESSIONAL ENGINEER · 10/7/2019

DESIGNED BY:	HEI
CHECKED BY:	HEI
APPROVED BY:	HEI
SUBMITTAL DATE:	OCTOBER 2019
SCALE:	AS SHOWN

SOUTH AUSTIN REGIONAL WASTEWATER TREATMENT PLANT
ELECTRICAL SUBSTATION NO. 1 REPLACEMENT PROJECT
CIP I.D.# 3333.032

SUBSTATION NO. 1
POWER AND AUXILIARY PLAN – PROPOSED

PROJECT NO: 2014–300 | SHT. 643 OF 866 | DWG NO. SUB1–E–042

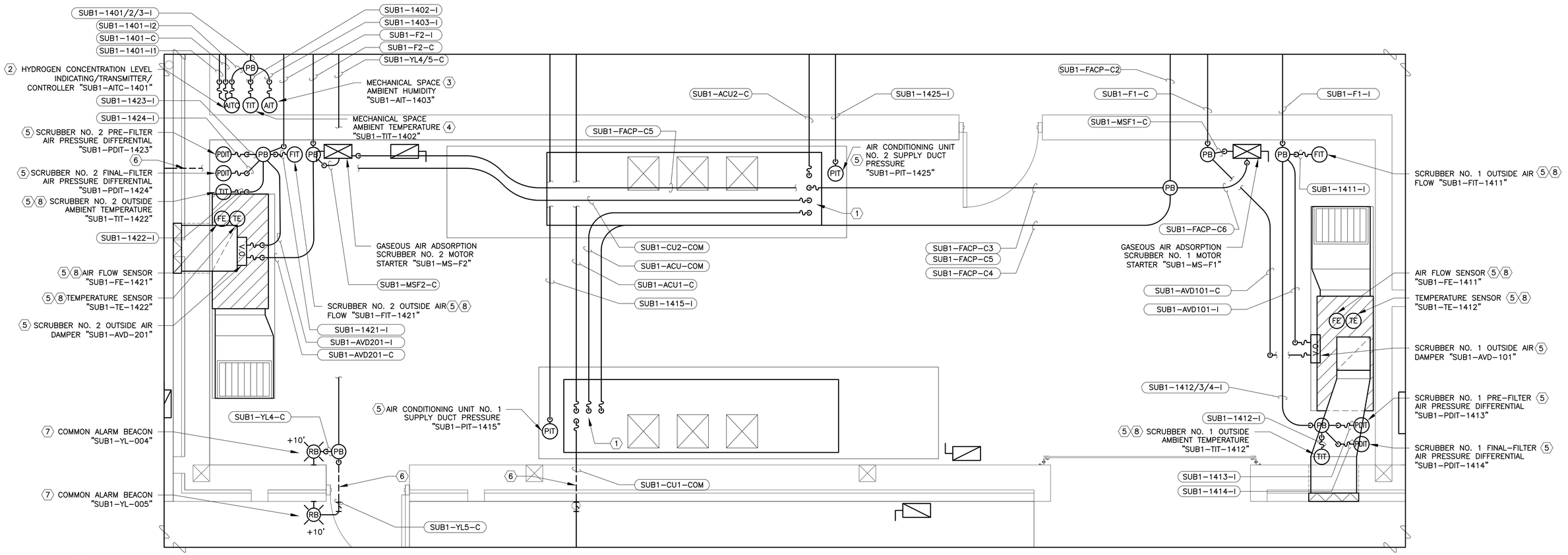

ENLARGED PLAN (1) [SUB1-E-039]

SCALE: 1/2" = 1'

KEY NOTES:

1. CONDUIT ENTRY LOCATION IS APPROXIMATE. COORDINATE WITH EQUIPMENT MANUFACTURER TO DETERMINE ACTUAL CONDUIT ENTRY LOCATIONS AND MAKE ALL FINAL TERMINATIONS.
2. FURNISH AND INSTALL HYDROGEN GAS ANALYZER AND INDICATING TRANSMITTER PER DETAIL 2 ON DRAWING NO. [TD-I-001].
3. MOUNT HUMIDITY INDICATING TRANSMITTER PER DETAIL 4 ON DRAWING NO. [TD-I-001].
4. MOUNT TEMPERATURE INDICATING TRANSMITTER, PER DETAIL 1 ON DRAWING NO. [TD-I-001].
5. REFER TO HVAC DRAWINGS FOR MOUNTING DETAILS AND INSTRUMENTATION LOCATIONS.

KEY NOTES (CONTINUED):

6. FURNISH AND INSTALL SEALING FITTING. PROPOSED CONDUIT/WIRE PENETRATES THROUGH STRUCTURAL WALL ACCORDING TO THE DETAIL 4 ON DRAWING NO. [TD-E-009]. ALTHOUGH SHOWN ON THE EXTERIOR OF THE BUILDING, SEALING FITTING MAY BE THE FIRST COUPLING ON THE INTERIOR OR EXTERIOR OF THE CONDUIT PENETRATION.
7. FURNISH AND INSTALL ALARM BEACON PER DETAIL 6 ON DRAWING NO. [TD-E-009].
8. REFER TO MECHANICAL DRAWINGS FOR CONDUIT/WIRE CONNECTING SENSOR AND TRANSMITTER.

BAR LENGTH ON ORIGINAL DRAWING EQUALS ONE INCH, ADJUST SCALE ACCORDINGLY.

REUSE OF DOCUMENTS

This document, and the designs incorporated herein, is an instrument of professional service that has been developed, designed and prepared by Harutunian Engineering, Inc., and is not to be used, in whole or in part, for any other project without giving written notice to Harutunian Engineering, Inc.

NO.	DATE:	DESCRIPTION

HARUTUNIAN ENGINEERING INCORPORATED
TEXAS FIRM REGISTRATION NUMBER F-2408
ENGINEERING AND ENVIRONMENTAL CONSULTANTS
8100 CROSS PARK DRIVE
AUSTIN, TEXAS 78754

STATE OF TEXAS · SHANT HARUTUNIAN · 87735 · REGISTERED PROFESSIONAL ENGINEER · 10/7/2019

DESIGNED BY:	HEI
CHECKED BY:	HEI
APPROVED BY:	HEI
SUBMITTAL DATE:	OCTOBER 2019
SCALE:	AS SHOWN

SOUTH AUSTIN REGIONAL WASTEWATER TREATMENT PLANT
ELECTRICAL SUBSTATION NO. 1 REPLACEMENT PROJECT
CIP I.D.# 3333.032

SUBSTATION NO. 1

ENLARGED I&C PLAN – PROPOSED (SHEET 1 OF 2)

PROJECT NO: 2014-300 | SHT. 644 OF 866 | DWG NO. SUB1-E-043

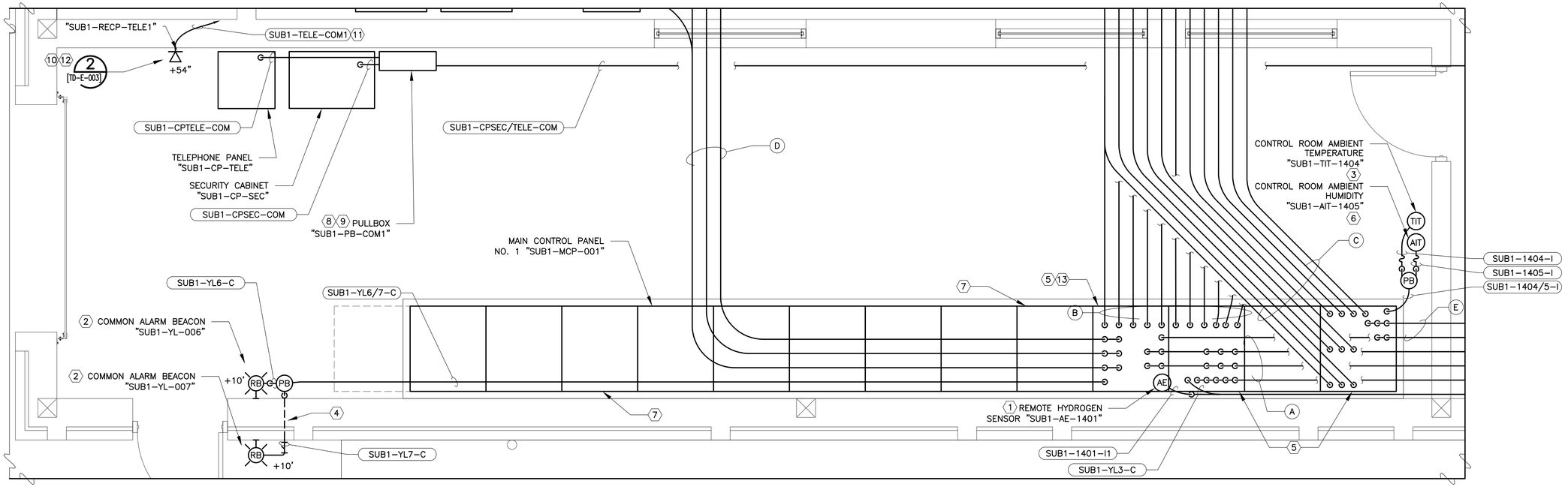

N
PLANT NORTH

ENLARGED PLAN 2 [SUB1-E-039]

SCALE: 1/2" = 1'

KEY NOTES:

1. MOUNT REMOTE HYDROGEN GAS CONCENTRATION SENSOR FROM SUPPORT STRUCTURE WITHIN 6" OF HIGHEST POINT IN CEILING. FURNISH AND INSTALL CONDUIT/WIRE INTERCONNECTING THE REMOTE SENSOR WITH THE INDICATING TRANSMITTER. NOT ALL INSTALLATION DETAILS ARE SHOWN HERE FOR CLARITY. REFER TO DETAIL 2 ON DRAWING NO. [TD-I-001] FOR ADDITIONAL INFORMATION.
2. FURNISH AND INSTALL ALARM BEACON PER DETAIL 3 ON DRAWING NO. [TD-E-009].
3. MOUNT TEMPERATURE INDICATING TRANSMITTER PER DETAIL 1 ON DRAWING NO. [TD-I-001].
4. FURNISH AND INSTALL SEALING FITTING. PROPOSED CONDUIT/WIRE PENETRATES THROUGH STRUCTURAL WALL ACCORDING TO THE DETAIL 4 ON DRAWING NO. [TD-E-009]. ALTHOUGH SHOWN ON THE EXTERIOR OF THE BUILDING, SEALING FITTING MAY BE THE FIRST COUPLING ON THE INTERIOR OR EXTERIOR OF THE CONDUIT PENETRATION.
5. MAIN CONTROL PANEL SECTIONS 1, 3, AND 4 ARE DEDICATED TO CONDUIT ENTRY. NO CONTROL DEVICES/EQUIPMENT TO BE INSTALLED IN THESE SECTIONS UNLESS NOTED OTHERWISE.
6. MOUNT HUMIDITY INDICATING TRANSMITTER PER DETAIL 4 ON DRAWING NO. [TD-I-001].
7. FURNISH AND INSTALL TEMPERATURE TRANSMITTERS "SUB1-TIT-1406" AND "SUB1-TIT-1407" IN SECTIONS 5 AND 11, RESPECTIVELY, SIMILAR TO DETAIL 1 ON DRAWING NO. [TD-I-001]. IN LIEU OF MOUNTING TO CONCRETE WALL, SECURE TRANSMITTER TO BACKPLANE WITH STAINLESS STEEL SCREWS. ALSO, IN LIEU OF CONNECTING FLEXIBLE LIQUID-TIGHT CONDUIT TO TRANSMITTER, FURNISH AND INSTALL CABLE/CORD FITTING PER SPECIFICATIONS.
8. FURNISH AND INSTALL PULLBOX MINIMALLY SIZED 24"H x 24"W x 8" D, PER, AND ACCORDING TO, THE NATIONAL ELECTRICAL CODE (N.E.C.).
9. MOUNT PULLBOX TO WALL PER DETAIL 3 ON DRAWING NO. [TD-E-010].

KEY NOTES (CONTINUED):

10. RECESS MOUNT TELEPHONE/VOICE OUTLET BOX IN WALL. HOMERUNS ROUTED WITHIN STRUCTURE, COORDINATE WITH STRUCTURAL. COORDINATE OUTLET TYPE WITH OWNER.
11. CONDUIT/WIRE IS ROUTED WITHIN STRUCTURAL WALL AND CONTINUES TO/FROM CONTROL PANEL "SUB1-CP-TELE".
12. COORDINATE EXACT LOCATION OF VOICE OUTLET WITH OWNER.
13. FURNISH AND INSTALL STIFFENING PLATE FOR EXTRA BRACING OF CONTROL PANEL TOP PLATE TO SUPPORT REQUIRED NUMBER OF CONDUIT ENTRIES.

CONDUIT BANK IDENTIFICATION TABLE

IDENTIFIER	CONDUIT BANK CONTENTS
A	SUB1-1401-C, SUB1-1401/2/3-I, SUB1-CP2-C, SUB1-F2-C, SUB1-F2-I, SUB1-1415-I, SUB1-ACU1-C, SUB1-1425-I, SUB1-ACU2-C, SUB1-F1-I, SUB1-F1-C, SUB1-PDB1-C, SUB1-CHGR1-C, SUB1-CHGR2-C, SUB1-BM1-C1, AND SUB1-YL4/5-C
B	SUB1-SWGR100-C1, SUB1-SWGR100-C2, SUB1-SWGR100-C3, SUB1-SWGR100-C4, SUB1-SWGR100-C5, SUB1-SWGR200-C1, SUB1-SWGR200-C2, SUB1-SWGR200-C3, SUB1-SWGR200-C4, SUB1-SWGR200-C5, AND SUB1-YL1/2-C
C	SUB1-SWGR100-COM1, SUB1-SWGR100-COM2, SUB1-SWGR100-COM3, SUB1-SWGR100-COM4, SUB1-SWGR100-COM5, SUB1-SWGR200-COM1, SUB1-SWGR200-COM2, SUB1-SWGR200-COM3, SUB1-SWGR200-COM4, AND SUB1-SWGR200-COM5
D	SUB1-BKR1E-C, SUB1-BKR1N-C, SUB1-ATS1-C, SUB1-SPDPDP1-C, SUB1-ATS2-C, AND SUB1-INV1-C.
E	SUB1-CP2-COM1, SUB1-COM-A, SUB1-COM-B, SUB1-BM1-COM, SUB1-FACP-C1, AND SUB1-BM1-C1

BAR LENGTH ON ORIGINAL DRAWING EQUALS ONE INCH, ADJUST SCALE ACCORDINGLY.

REUSE OF DOCUMENTS

This document, and the designs incorporated herein, is an instrument of professional service that has been developed, designed and prepared by Harutunian Engineering, Inc., and is not to be used, in whole or in part, for any other project without giving written notice to Harutunian Engineering, Inc.

NO.	DATE:	DESCRIPTION

HARUTUNIAN ENGINEERING INCORPORATED

TEXAS FIRM REGISTRATION NUMBER F-2408

ENGINEERING AND ENVIRONMENTAL CONSULTANTS
8100 CROSS PARK DRIVE
AUSTIN, TEXAS 78754

STATE OF TEXAS
SHANT HARUTUNIAN
87735
REGISTERED
PROFESSIONAL ENGINEER
10/7/2019

DESIGNED BY:	HEI
CHECKED BY:	HEI
APPROVED BY:	HEI
SUBMITTAL DATE:	OCTOBER 2019
SCALE:	AS SHOWN

SOUTH AUSTIN REGIONAL WASTEWATER TREATMENT PLANT
ELECTRICAL SUBSTATION NO. 1 REPLACEMENT PROJECT
CIP I.D.# 3333.032

SUBSTATION NO. 1
ENLARGED I&C PLAN – PROPOSED (SHEET 2 of 2)

PROJECT NO: 2014-300 | SHT. 645 OF 866 | DWG NO. SUB1-E-044

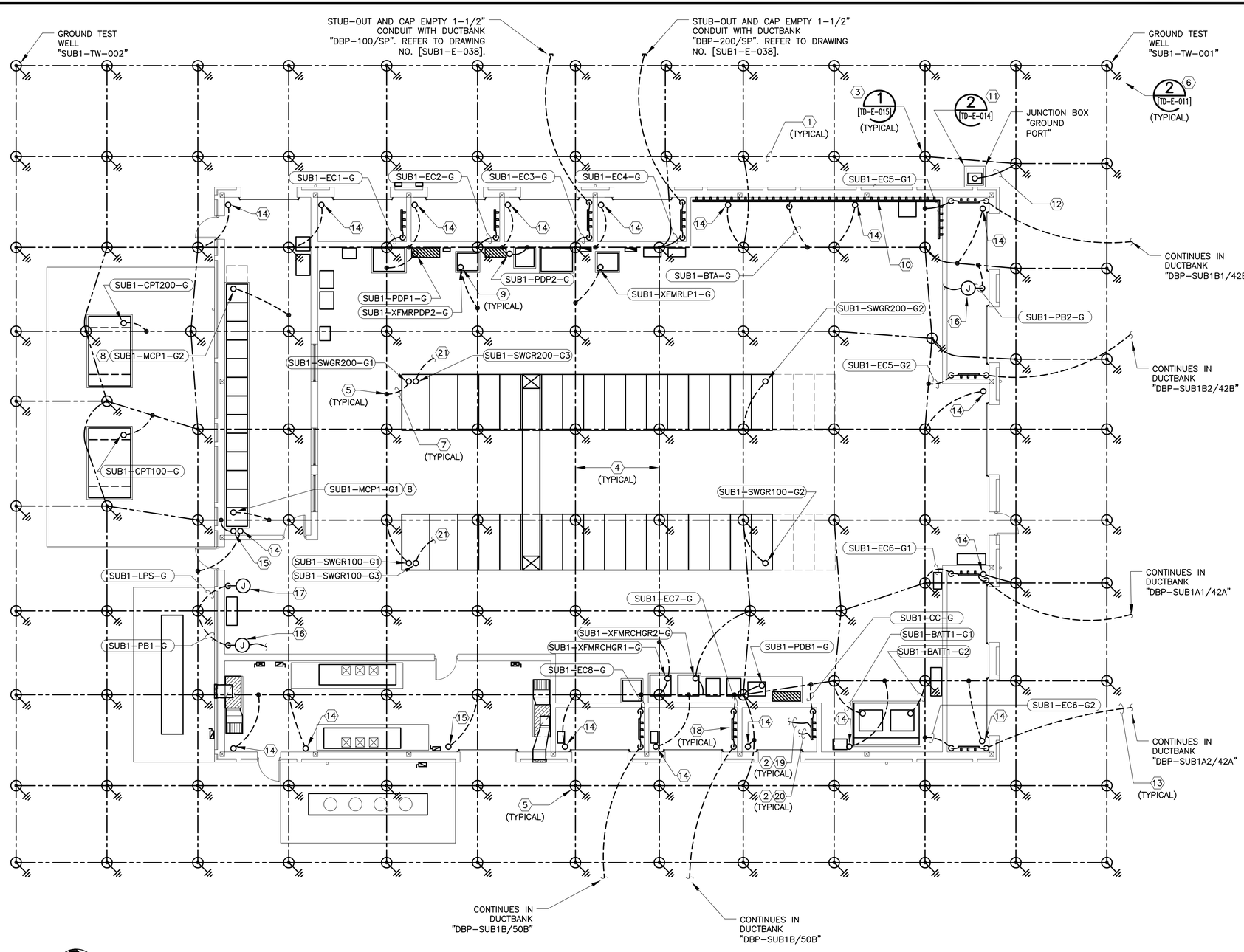

SUBSTATION NO. 1

SCALE: 1/8" = 1'

PLANT NORTH

KEY NOTES:

1. 1 – 250kCMIL BARE GROUNDING CONDUCTOR DIRECT BURIED AT MINIMAL DEPTH OF 30 INCHES BELOW FINISHED GRADE/BUILDING SLAB.
2. TYPICAL FOR EACH CLOSET BUS BAR LOCATION SHOWN ON THIS DRAWING. REFER TO DETAIL 3 DRAWING NO. [TD-E-015] FOR TERMINATION AND INSTALLATION METHODS, AND ADDITIONAL INFORMATION.
3. FURNISH AND INSTALL GROUND ELECTRODE PER DETAIL 1 ON DRAWING NO. [TD-E-015].
4. MAINTAIN A MINIMUM SPACING OF 13'-0" AND A MAXIMUM SPACING OF 15'-0" CENTER TO CENTER BETWEEN ALL GROUNDING ELECTRODES. MINIMUM BURIAL DEPTH SHALL BE 30 INCHES BELOW BOTTOM OF BUILDING SLAB/FINISHED GRADE.
5. MAKE ALL CONNECTIONS TO GROUNDING ELECTRODES AND GROUNDING GRID BY MEANS OF EXOTHERMIC WELD EXCEPT WHERE SHOWN OTHERWISE.
6. FURNISH AND INSTALL TEST WELL PER DETAILS ON DRAWING NO. [TD-E-011].
7. 1 – 250kCMIL INSULATED EQUIPMENT GROUNDING CONDUCTOR IN 1-1/2" PVC CONDUIT, DIRECT BURIED AT MINIMUM 30" BELOW FINISHED GRADE. ALTHOUGH REQUIRED OTHERWISE BY THE SPECIFICATIONS, DIRECT BURY CONDUIT WITHOUT DUCT BANK CONCRETE ENCASEMENT. PVC CONDUIT TO EXTEND HORIZONTALLY 12 INCHES FROM COUPLING AT 90 DEGREE BEND. GROUNDING CONDUCTOR TO EXTEND TO GROUNDING NETWORK.
8. BOND TO MAIN CONTROL PANEL "SUB1-MCP-001" GROUND BUS BAR.
9. GROUNDING CONDUIT/WIRE STUBS UP INTO ELECTRICAL EQUIPMENT, TERMINATE TO GROUND BUS OF EQUIPMENT.
10. MOUNT GROUND BUS BETWEEN +48" AND +66" ABOVE FINISHED FLOOR.
11. IN ADDITION TO THE GROUNDING SHOWN ON THIS DRAWING CONTRACTOR SHALL INSTALL A CONCRETE ENCASED ELECTRODE GROUNDING SYSTEM PER DETAIL 2 ON DRAWING NO. [TD-E-014].
12. 1 – 250KCMIL INSULATED GROUNDING CONDUCTOR IN 1-1/2" PVC CONDUIT. CONDUIT/GROUNDING CONDUCTOR STUBS UP THROUGH EQUIPMENT PAD. CONNECT GROUNDING CONDUCTOR TO GROUNDING ELECTRODE BY MECHANICAL CONNECTION INSIDE ABOVE GROUND JUNCTION BOX TO FACILITATE ISOLATION OF PROCESS AREA GROUNDING SYSTEM.
13. GROUNDING CONDUCTORS/CONDUITS CONTINUE TO/FROM POINTS ON PROPOSED DUCT BANKS, REFER TO DUCTBANK SECTIONS FOR ADDITIONAL INFORMATION
14. STUB-UP CONDUIT/250KCMIL GROUND CONDUCTOR ACCORDING TO DETAIL 4 ON DRAWING NO. [TD-E-015]. ROUTE/SECURE GROUND CONDUCTOR TO FACE OF STRUCTURAL CMU WALL, TO EXOTHERMIC WELD/TERMINATION POINT ON ADJACENT STRUCTURAL STEEL COLUMN.
15. WHERE IDENTIFIED ON THE PLANS, COORDINATE EXACT DIMENSIONS OF ENCLOSURE/EQUIPMENT IMMEDIATELY ADJACENT TO STUB-UP LOCATION WITH MANUFACTURER OF ENCLOSURE/EQUIPMENT. LOCATE STUB-UP 6" HORIZONTALLY FROM EDGE OF ENCLOSURE. ROUTE/SECURE EXPOSED 250KCMIL GROUND CONDUCTOR EXITING STUB-UP, TO INTERIOR FACE OF STRUCTURAL CMU WALL (MAXIMUM DISTANCE BETWEEN POINTS OF ATTACHMENT 24"), TO EXOTHERMIC WELD/TERMINATION POINT ON STRUCTURAL STEEL COLUMN. STUB-UP ACCORDING TO DETAIL 4 ON DRAWING NO. [TD-E-015].
16. GROUNDING JUNCTION BOX LOCATED IN ROOF STRUCTURE AREA. FROM JUNCTION BOX ROUTE A 1-1/2" RIGID CONDUIT WITH AN INSULATED 250KCMIL GROUND CONDUCTOR. MAKE A MECHANICAL GROUND CONNECTION PER SPECIFICATION TO EACH ROOF TRUSS. COORDINATE THE INSTALLATION OF EACH OF THESE CONNECTIONS SO AS NOT TO CONFLICT WITH ANY STRUCTURAL/MECHANICAL/ELECTRICAL SYSTEMS. ALL GROUND CONDUCTOR CONNECTIONS AT JUNCTION BOX SHALL BE BY EXOTHERMIC WELD.

KEY NOTES (CONTINUED):

17. FURNISH AND INSTALL JUNCTION BOX WITH MINIMUM DIMENSIONS OF 24"W X 24"H X 16"D. FURNISH AND INSTALL VENT DRAIN FITTING AT BOTTOM OF BOX. JUNCTION BOX IS DEDICATED FOR SPLICING OF LIGHTNING PROTECTION SYSTEM GROUNDING CONDUCTOR(S) TO INSULATED GROUNDING SYSTEM CONDUCTOR FROM GROUNDING GRID. MAKE ALL CONNECTIONS INSIDE JUNCTION BOX BY MEANS OF EXOTHERMIC WELD. SURFACE MOUNT TO WALL +8'-0" ABOVE FINISHED FLOOR. COIL 6' OF INSULATED GROUNDING CONDUCTOR FROM GRID INSIDE BOX FOR CONNECTION TO LIGHTNING PROTECTION SYSTEM. COORDINATE CONNECTIONS WITH LIGHTNING PROTECTION SYSTEM CONTRACTOR.
18. CLOSET GROUNDING BUS BAR LOCATION. MOUNT AT 4'-0" ABOVE FINISHED FLOOR. REFER TO DETAIL 3 ON DRAWING NO. [TD-E-015] FOR INSTALLATION METHOD AND ADDITIONAL INFORMATION.
19. ALTHOUGH NOT SHOWN FOR EACH CLOSET GROUND BUS ON THIS DRAWING, FURNISH AND INSTALL 1-BARE #6 AWG GROUND CONDUCTOR WITH DAISY CHAINED CONNECTIONS WITH THE FOLLOWING PATH: TO/FROM CABLE CLOSET GROUNDING BUS BAR, THEN TO/FROM CONDUIT STRAP AT CONDUIT STUB-UP, THEN TO/FROM CONDUIT GROUNDING BUSHING, THEN TO/FROM CABLE CLAMP, THEN TO/FROM CONDUIT BUSHING, AND ENDING AT FINAL CONDUIT STRAP WITHIN CABLE CLOSET. EACH INDIVIDUAL CONDUIT/CABLE ROUTE SHALL HAVE A SEPARATE AND DEDICATED GROUND CONDUCTOR.
20. ALTHOUGH NOT SHOWN FOR EACH CLOSET GROUND BUS ON THIS DRAWING, FURNISH AND INSTALL 1-#6 BARE GROUND CONDUCTOR WITH DAISY CHAINED CONNECTIONS FROM/TO THE CABLE CLOSET GROUNDING BUS BAR, THEN TO EACH OF THE CONDUIT/CABLE SUPPORT RACKS. MAKE CONNECTION/TERMINATION TO RACK AS SHOWN ON DETAIL 3 ON DRAWING NO. [TD-E-015].
21. CONDUIT/WIRE CONTINUES TO GROUND PORT JUNCTION BOX, NOT SHOWN FOR CLARITY. REFER TO KEYNOTE 11 ON THIS SHEET FOR ADDITIONAL INFORMATION.
22. BOND TO MAIN CONTROL PANEL "SUB1-MCP-001" ISOLATED GROUND BUS BAR.

GENERAL NOTES:

1. THE LAYOUT/PLACEMENT OF GROUND ELECTRODES SHOWN IS APPROXIMATE. CONTRACTOR SHALL COORDINATE THE FINAL GROUND ELECTRODE LAYOUT WITH CIVIL/STRUCTURAL/MECHANICAL IN ORDER TO AVOID CONFLICTS. SLIGHT RELOCATION FROM THAT SHOWN HEREIN MAY BE NECESSARY TO AVOID CONFLICTS. ARRANGE/INSTALL GROUND ELECTRODES AND MAINTAIN THE MINIMUM AND MAXIMUM SPACING BETWEEN ALL GROUND ELECTRODES AS NOTED. MINIMUM BURIAL DEPTH TO TOP OF ELETRODE SHALL BE 30" BELOW FINISHED SLAB/GRADE. SOME GROUND ELECTRODE LOCATIONS WILL, HOWEVER, FALL IN AREAS REQUIRING INCREASED DEPTH. TRANSITION TO THESE LOWER ELEVATIONS SHALL BE COORDINATED, FURNISHED, AND INSTALLED, AS REQUIRED, BY CONTRACTOR AT NO ADDITIONAL COST TO THE OWNER. CONTRACTOR SHALL INSURE THAT THE GROUND ELECTRODE IS PLACED INTO UNDISTURBED/CLEAR SOIL REGARDLESS OF DEPTH FROM FINISHED SLAB.
2. CONTRACTOR SHALL COORDINATE THE INSTALLATION OF, AND PROTECTION OF, THE ENTIRE GROUNDING NETWORK (GROUND ELECTRODES AND ASSOCIATED GROUND CONDUCTORS IN AND AROUND THE STRUCTURE) WITH CIVIL/STRUCTURAL/MECHANICAL DURING ALL PHASES OF CONSTRUCTION.
3. THE ACTUAL REQUIRED SIZE OF THE CONDUIT ENTRANCE AREAS IS TO BE DETERMINED BY THE EQUIPMENT MANUFACTURER. THE ACTUAL EQUIPMENT SIZE MAY VARY. THE LOCATION AND SIZE OF THE EQUIPMENT CONDUIT ENTRANCE AREAS SHALL BE COORDINATED WITH THE CONCRETE FOUNDATION PLANS OF THE EQUIPMENT PAD. REFER TO THE APPLICABLE CIVIL/STRUCTURAL/MECHANICAL/ELECTRICAL, ETC. DRAWINGS.

BAR LENGTH ON ORIGINAL DRAWING EQUALS ONE INCH, ADJUST SCALE ACCORDINGLY.

REUSE OF DOCUMENTS

This document, and the designs incorporated herein, is an instrument of professional service that has been developed, designed and prepared by Harutunian Engineering, Inc., and is not to be used, in whole or in part, for any other project without giving written notice to Harutunian Engineering, Inc.

NO.	DATE:	DESCRIPTION

HARUTUNIAN ENGINEERING INCORPORATED
TEXAS FIRM REGISTRATION NUMBER F-2408
ENGINEERING AND ENVIRONMENTAL CONSULTANTS
8100 CROSS PARK DRIVE
AUSTIN, TEXAS 78754

STATE OF TEXAS
SHANT HARUTUNIAN
87735
REGISTERED
PROFESSIONAL ENGINEER
10/7/2019

DESIGNED BY:	HEI
CHECKED BY:	HEI
APPROVED BY:	HEI
SUBMITTAL DATE:	OCTOBER 2019
SCALE:	AS SHOWN

SOUTH AUSTIN REGIONAL WASTEWATER TREATMENT PLANT
ELECTRICAL SUBSTATION NO. 1 REPLACEMENT PROJECT
CIP I.D.# 3333.032

SUBSTATION NO. 1
GROUNDING PLAN – PROPOSED

PROJECT NO: 2014-300 | SHT. 646 OF 866 | DWG NO. SUB1-E-045

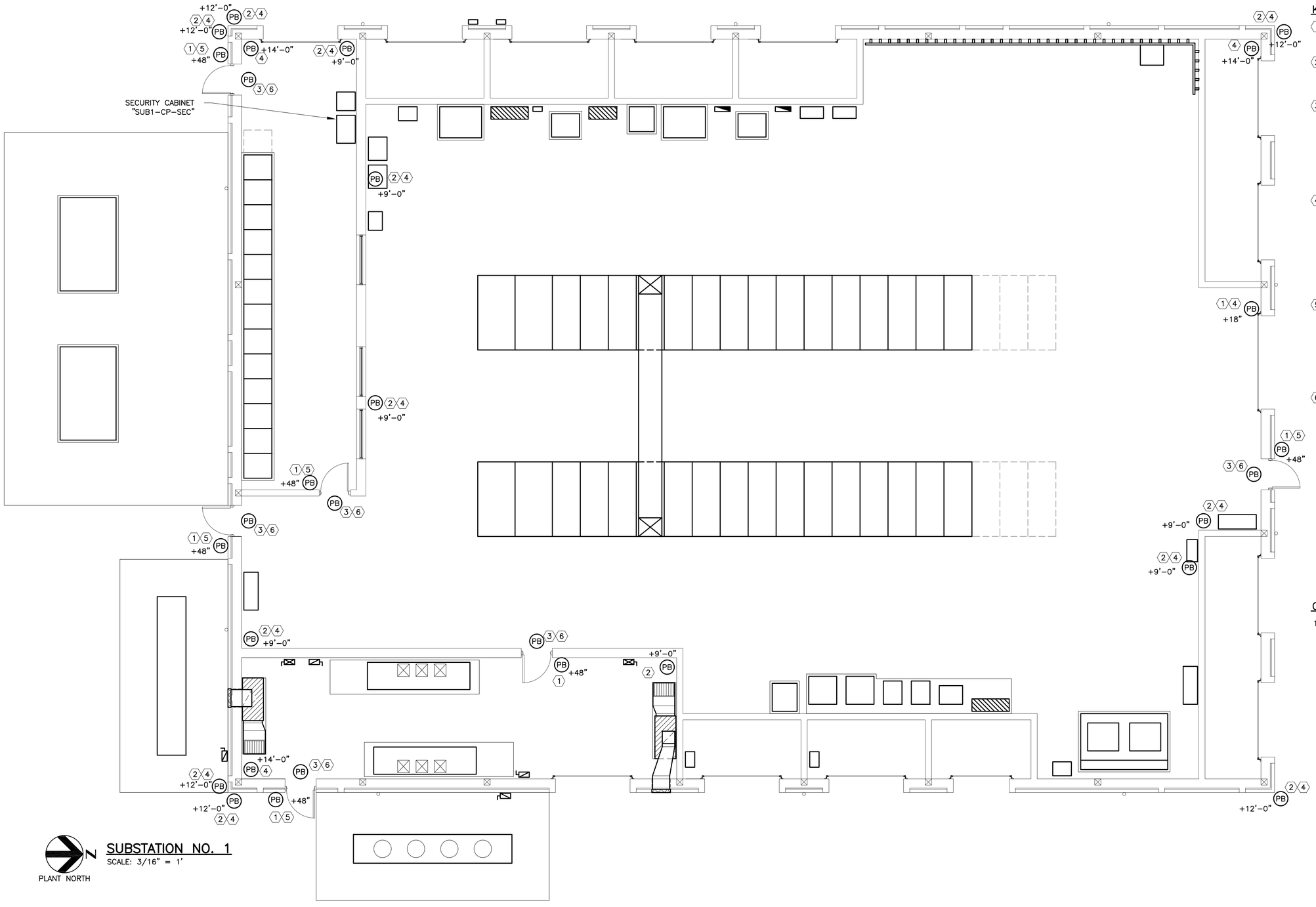

KEY NOTES:

1. RECESS MOUNT DEVICE BOX(ES) IN WALL. COORDINATE WITH SECURITY CONTRACTOR/OWNER AND ARCHITECTURAL FOR EXACT LOCATION.
2. DEVICE BOX FURNISHED BY SECURITY CONTRACTOR/OWNER. COORDINATE INSTALLATION DETAILS WITH SECURITY CONTRACTOR/OWNER/ARCHITECT.
3. FURNISH AND INSTALL DEVICE BOX COMPLETE WITH COVERPLATE AND CORD/FITTING RECESS MOUNTED AT TOP OF DOOR JAMB TO FACILITATE DEVICE WIRING TERMINATION. ADDITIONALLY, EXTEND ONE EMPTY 3/4" LIQUID-TIGHT FLEXIBLE CONDUIT TO CONNECT TO THE LOCK SIDE (DOOR HANDLE SIDE) OF THE DOOR JAMB AND ONE 3/4" LIQUID-TIGHT FLEXIBLE CONDUIT TO CONNECT TO AN ADDITIONAL DEVICE FURNISHED BY THE SECURITY CONTRACTOR/OWNER.
4. FURNISH AND INSTALL AN EMPTY CONDUIT SYSTEM FOR SECURITY WIRING. WIRING WILL BE INSTALLED BY SECURITY SYSTEM CONTRACTOR. CONDUITS SHALL BE A MINIMUM OF 3/4" AND SHALL ROUTE TO/FROM SECURITY DEVICE(S) AND CONNECT TO SECURITY CONTROL PANEL "SUB1-CP-SEC" LOCATED IN SUBSTATION BUILDING ELECTRICAL ROOM. COORDINATE ROUTE OF PROPOSED CONDUIT/WIRE, VERIFYING ALL POINTS OF CONNECTION WITH THE SECURITY SYSTEM CONTRACTOR PRIOR TO COMMENCING INSTALLATION.
5. FURNISH AND INSTALL AN EMPTY CONDUIT SYSTEM FOR SECURITY WIRING. WIRING WILL BE INSTALLED BY SECURITY SYSTEM CONTRACTOR. CONDUITS SHALL BE A MINIMUM OF 3/4" AND SHALL ROUTE TO/FROM SECURITY DEVICE(S) AND CONNECT TO DEVICE BOX ON ADJACENT DOOR. COORDINATE ROUTE OF PROPOSED CONDUIT/WIRE, VERIFYING ALL POINTS OF CONNECTION WITH THE SECURITY SYSTEM CONTRACTOR PRIOR TO COMMENCING INSTALLATION.
6. FURNISH AND INSTALL AN EMPTY CONDUIT SYSTEM FOR SECURITY WIRING. WIRING WILL BE INSTALLED BY SECURITY SYSTEM CONTRACTOR. CONDUITS SHALL BE A MINIMUM OF 1" AND SHALL ROUTE TO/FROM SECURITY DEVICE(S) AND CONNECT TO SECURITY CONTROL PANEL "SUB1-CP-SEC" LOCATED IN SUBSTATION BUILDING ELECTRICAL ROOM. COORDINATE ROUTE OF PROPOSED CONDUIT/WIRE, VERIFYING ALL POINTS OF CONNECTION WITH THE SECURITY SYSTEM CONTRACTOR PRIOR TO COMMENCING INSTALLATION.

GENERAL NOTES:

1. TYPICAL FOR ALL PROPOSED CONDUIT/WIRE PENETRATING THROUGH STRUCTURAL WALL. PENETRATIONS SHALL BE PER AND ACCORDING TO THE DETAIL 4 ON DRAWING NO. [TD-E-009]. CONTRACTOR TO SEAL/PACK COMPLETELY, INTERIOR AREA OF CONDUIT AROUND WIRE WITH APPROVED SEALANT/FIRE RETARDANT TO PREVENT THE TRANSFER OF CORROSIVE GASES INTO THE INTERIOR AREA OF THE SUBSTATION NO. 1 BUILDING. SEALING FITTING PER SPECIFICATION MAY BE SUBSTITUTED FOR DESCRIBED PROCEDURE AT CONTRACTORS DISCRETION.

N
PLANT NORTH

SUBSTATION NO. 1
SCALE: 3/16" = 1'

BAR LENGTH ON ORIGINAL DRAWING EQUALS ONE INCH, ADJUST SCALE ACCORDINGLY.

REUSE OF DOCUMENTS

This document, and the designs incorporated herein, is an instrument of professional service that has been developed, designed and prepared by Harutunian Engineering, Inc., and is not to be used, in whole or in part, for any other project without giving written notice to Harutunian Engineering, Inc.

NO.	DATE:	DESCRIPTION

HARUTUNIAN ENGINEERING INCORPORATED
TEXAS FIRM REGISTRATION NUMBER F-2408
ENGINEERING AND ENVIRONMENTAL CONSULTANTS
8100 CROSS PARK DRIVE
AUSTIN, TEXAS 78754

STATE OF TEXAS
SHANT HARUTUNIAN
87735
REGISTERED
PROFESSIONAL ENGINEER
10/7/2019

DESIGNED BY:	HEI
CHECKED BY:	HEI
APPROVED BY:	HEI
SUBMITTAL DATE:	OCTOBER 2019
SCALE:	AS SHOWN

SOUTH AUSTIN REGIONAL WASTEWATER TREATMENT PLANT
ELECTRICAL SUBSTATION NO. 1 REPLACEMENT PROJECT
CIP I.D.# 3333.032

SUBSTATION NO. 1
SECURITY PLAN – PROPOSED

PROJECT NO: 2014-300 | SHT. 647 OF 866 | DWG NO. SUB1-E-046

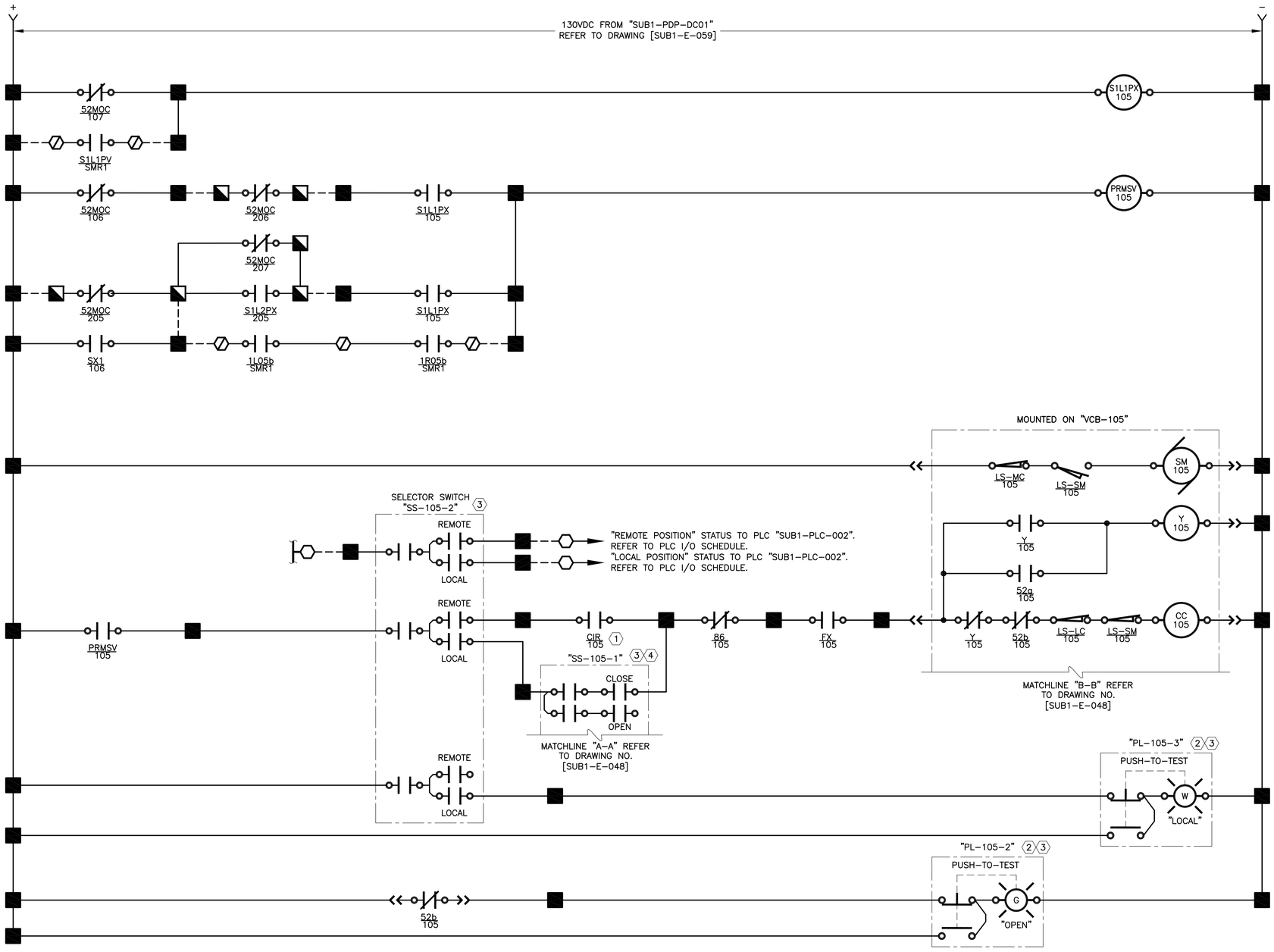

CONTROL LOGIC DEVICE LEGEND:

52a	BREAKER MOUNTED AUXILIARY CONTACT – OPEN WHEN BREAKER IS OPEN
52b	BREAKER MOUNTED AUXILIARY CONTACT – CLOSED WHEN BREAKER IS OPEN
52MOC	MECHANISM OPERATED CELL SWITCH – OPERATES AS AUXILIARY CONTACT WHEN BREAKER IS IN CONNECTED OR TEST POSITION
LS–MC	SPRING MOTOR CUTOFF SWITCH – OPEN WHEN BREAKER IS RACKED OUT
LS–SM	SPRING MOTOR LIMIT SWITCH – SHOWN WITH SPRINGS CHARGED – CHANGES STATES WHEN SPRING IS DISCHARGED
LS–LC	LATCH CHECK SWITCH – OPENS WHEN TRIP LATCH MOVES OUT OF ITS NORMAL POSITION
SM	SPRING CHARGING MOTOR
Y	ANTI–PUMP RELAY – PREVENTS ENERGIZATION OF CLOSE COIL WHEN ENERGIZED
CC	BREAKER CLOSE COIL – CLOSES BREAKER WHEN ENERGIZED
TC	BREAKER TRIP COIL – OPENS BREAKER WHEN ENERGIZED
86	PROTECTIVE RELAY TRIP LOCKOUT RELAY – MANUAL RESET
FX	PROTECTIVE RELAY FAILURE AUXILIARY RELAY – ENERGIZED WHEN PROTECTIVE RELAY STATUS IS OK
TRAN	PROTECTIVE RELAY XFER AUXILIARY RELAY
TOC	TRUCK OPERATED CONTACT – CONTACTS SHOWN WITH BREAKER RACKED OUT
SX	SYNC ENABLE AUXILIARY RELAY
S1L1PX	SUBSTATION MANAGEMENT RELAY PERMISSIVE OUTPUT AUXILIARY RELAY
S1L2PX	SUBSTATION MANAGEMENT RELAY PERMISSIVE OUTPUT AUXILIARY RELAY
PRMSV	BREAKER CLOSE PERMISSIVE AUXILIARY RELAY

KEY NOTES:

1. REFER TO DRAWING NO. [SUB1–E–057].
2. INDICATING PILOT LIGHT WITH INTEGRAL MOMENTARY ACTION "PUSH–TO–TEST" PUSH BUTTON. REFER TO ELECTRICAL SPECIFICATIONS.
3. MOUNTED ON FRONT OF PROPOSED SWITCHGEAR "SUB1–SWGR–100" SECTION 105A.
4. THREE POSITION "OPEN–OFF–CLOSE" SELECTOR SWITCH WITH "OPEN" SPRING RETURN TO CENTER "OFF" AND "CLOSE" SPRING RETURN TO CENTER "OFF". FURNISH AND INSTALL NAMEPLATE INDICATIONS FOR THE "OPEN" AND "CLOSE" POSITIONS, BUT NOT THE "OFF" POSITION.

GENERAL NOTES:

1. ALSO REFER TO DRAWINGS [SUB1–E–057] THROUGH [SUB1–E–060] FOR ADDITIONAL CONTROL LOGIC REQUIREMENTS.

BAR LENGTH ON ORIGINAL DRAWING EQUALS ONE INCH, ADJUST SCALE ACCORDINGLY.

REUSE OF DOCUMENTS

This document, and the designs incorporated herein, is an instrument of professional service that has been developed, designed and prepared by Harutunian Engineering, Inc., and is not to be used, in whole or in part, for any other project without giving written notice to Harutunian Engineering, Inc.

NO.	DATE:	DESCRIPTION

HARUTUNIAN ENGINEERING INCORPORATED

TEXAS FIRM REGISTRATION NUMBER F–2408

ENGINEERING AND ENVIRONMENTAL CONSULTANTS
8100 CROSS PARK DRIVE
AUSTIN, TEXAS 78754

STATE OF TEXAS
SHANT HARUTUNIAN
87735
REGISTERED
PROFESSIONAL ENGINEER
10/7/2019

DESIGNED BY:	HEI
CHECKED BY:	HEI
APPROVED BY:	HEI
SUBMITTAL DATE:	OCTOBER 2019
SCALE:	AS SHOWN

SOUTH AUSTIN REGIONAL WASTEWATER TREATMENT PLANT
ELECTRICAL SUBSTATION NO. 1 REPLACEMENT PROJECT
CIP I.D.# 3333.032

SUBSTATION NO. 1
SUB1–SWGR–100 MAIN BREAKER CONTROL LOGIC – PROPOSED (SHEET 1 OF 2)

PROJECT NO: 2014–300 | SHT. 648 OF 866 | DWG NO. SUB1–E–047

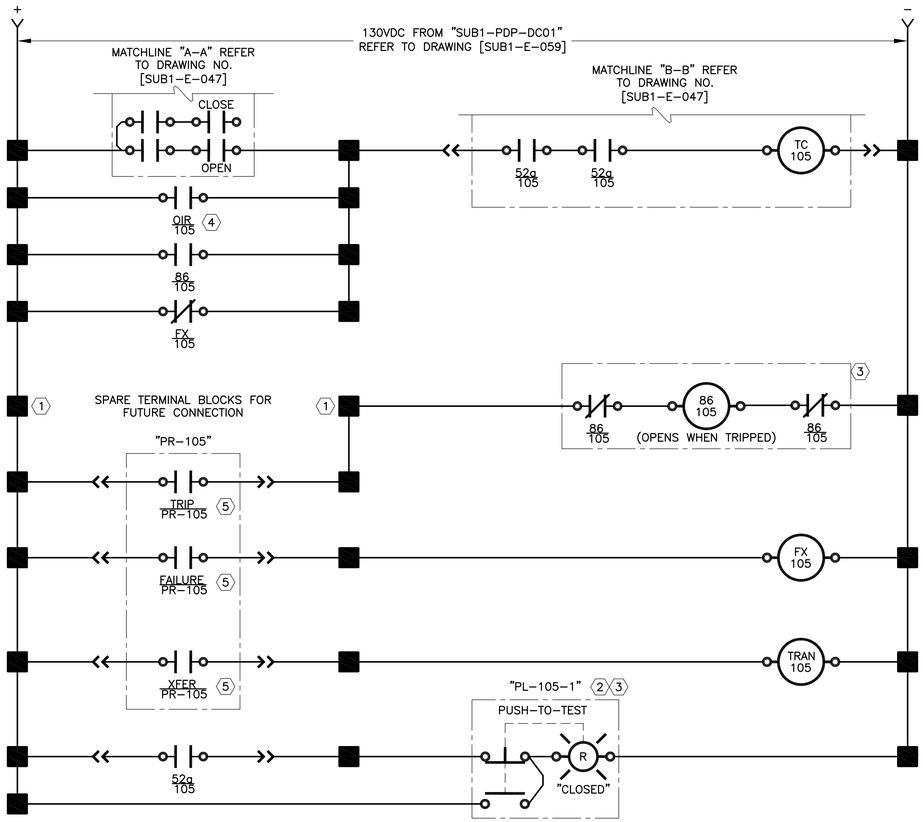

CONTROL LOGIC DEVICE LEGEND:

52a	BREAKER MOUNTED AUXILIARY CONTACT – OPEN WHEN BREAKER IS OPEN
52b	BREAKER MOUNTED AUXILIARY CONTACT – CLOSED WHEN BREAKER IS OPEN
52MOC	MECHANISM OPERATED CELL SWITCH – OPERATES AS AUXILIARY CONTACT WHEN BREAKER IS IN CONNECTED OR TEST POSITION
LS-MC	SPRING MOTOR CUTOFF SWITCH – OPEN WHEN BREAKER IS RACKED OUT
LS-SM	SPRING MOTOR LIMIT SWITCH – SHOWN WITH SPRINGS CHARGED – CHANGES STATES WHEN SPRING IS DISCHARGED
LS-LC	LATCH CHECK SWITCH – OPENS WHEN TRIP LATCH MOVES OUT OF ITS NORMAL POSITION
SM	SPRING CHARGING MOTOR
Y	ANTI-PUMP RELAY – PREVENTS ENERGIZATION OF CLOSE COIL WHEN ENERGIZED
CC	BREAKER CLOSE COIL – CLOSES BREAKER WHEN ENERGIZED
TC	BREAKER TRIP COIL – OPENS BREAKER WHEN ENERGIZED
86	PROTECTIVE RELAY TRIP LOCKOUT RELAY – MANUAL RESET
FX	PROTECTIVE RELAY FAILURE AUXILIARY RELAY – ENERGIZED WHEN PROTECTIVE RELAY STATUS IS OK
TRAN	PROTECTIVE RELAY XFER AUXILIARY RELAY
TOC	TRUCK OPERATED CONTACT – CONTACTS SHOWN WITH BREAKER RACKED OUT
SX	SYNC ENABLE AUXILIARY RELAY
S1L1PX	SUBSTATION MANAGEMENT RELAY PERMISSIVE OUTPUT AUXILIARY RELAY
S1L2PX	SUBSTATION MANAGEMENT RELAY PERMISSIVE OUTPUT AUXILIARY RELAY
PRMSV	BREAKER CLOSE PERMISSIVE AUXILIARY RELAY

KEY NOTES:

1. FURNISH AND INSTALL TERMINAL BLOCK FOR FUTURE CONNECTION.
2. INDICATING PILOT LIGHT WITH INTEGRAL MOMENTARY ACTION "PUSH-TO-TEST" PUSH BUTTON. REFER TO ELECTRICAL SPECIFICATIONS.
3. MOUNTED ON FRONT OF PROPOSED SWITCHGEAR "SUB1-SWGR-100" SECTION 105A.
4. REFER TO DRAWING NO. [SUB1-E-057].
5. REFER TO DRAWING NO. [SUB1-E-028].

GENERAL NOTES:

1. ALSO REFER TO DRAWINGS [SUB1-E-057] THROUGH [SUB1-E-060] FOR ADDITIONAL CONTROL LOGIC REQUIREMENTS.

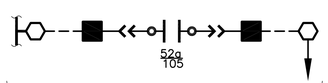

"BREAKER CLOSED" STATUS TO PLC "SUB1-PLC-002". REFER TO PLC I/O SCHEDULE.

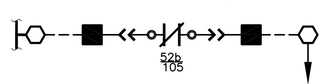

"BREAKER OPEN" STATUS TO PLC "SUB1-PLC-002". REFER TO PLC I/O SCHEDULE.

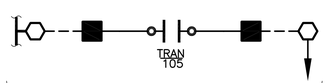

"TRANSFER" STATUS TO PLC "SUB1-PLC-002". REFER TO PLC I/O SCHEDULE.

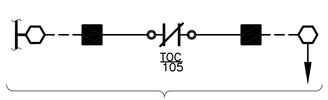

"BREAKER TRUCK POSITION" STATUS TO PLC "SUB1-PLC-002". REFER TO PLC I/O SCHEDULE.

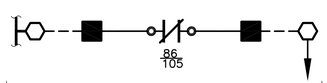

"LOCKOUT" STATUS TO PLC "SUB1-PLC-002". REFER TO PLC I/O SCHEDULE.

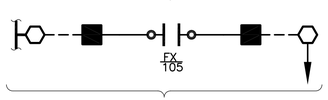

"PROTECTIVE RELAY FAILURE" STATUS TO PLC "SUB1-PLC-002". REFER TO PLC I/O SCHEDULE.

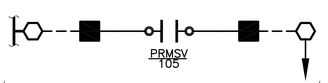

"BREAKER CLOSE PERMISSIVE" AUXILIARY RELAY STATUS TO PLC "SUB1-PLC-002". REFER TO PLC I/O SCHEDULE.

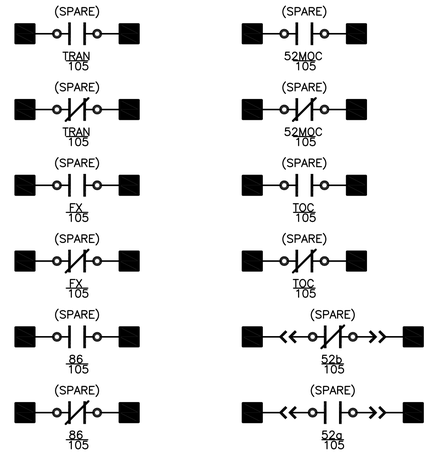

BAR LENGTH ON ORIGINAL DRAWING EQUALS ONE INCH, ADJUST SCALE ACCORDINGLY.

REUSE OF DOCUMENTS

This document, and the designs incorporated herein, is an instrument of professional service that has been developed, designed and prepared by Harutunian Engineering, Inc., and is not to be used, in whole or in part, for any other project without giving written notice to Harutunian Engineering, Inc.

NO.	DATE:	DESCRIPTION

HARUTUNIAN ENGINEERING INCORPORATED
TEXAS FIRM REGISTRATION NUMBER F-2408
ENGINEERING AND ENVIRONMENTAL CONSULTANTS
8100 CROSS PARK DRIVE
AUSTIN, TEXAS 78754

STATE OF TEXAS
SHANT HARUTUNIAN
87735
REGISTERED
PROFESSIONAL ENGINEER
10/7/2019

DESIGNED BY:	HEI
CHECKED BY:	HEI
APPROVED BY:	HEI
SUBMITTAL DATE:	OCTOBER 2019
SCALE:	AS SHOWN

SOUTH AUSTIN REGIONAL WASTEWATER TREATMENT PLANT
ELECTRICAL SUBSTATION NO. 1 REPLACEMENT PROJECT
CIP I.D.# 3333.032

SUBSTATION NO. 1
SUB1-SWGR-100 MAIN BREAKER CONTROL LOGIC – PROPOSED (SHEET 2 OF 2)

PROJECT NO: 2014-300 | SHT. 649 OF 866 | DWG NO. SUB1-E-048

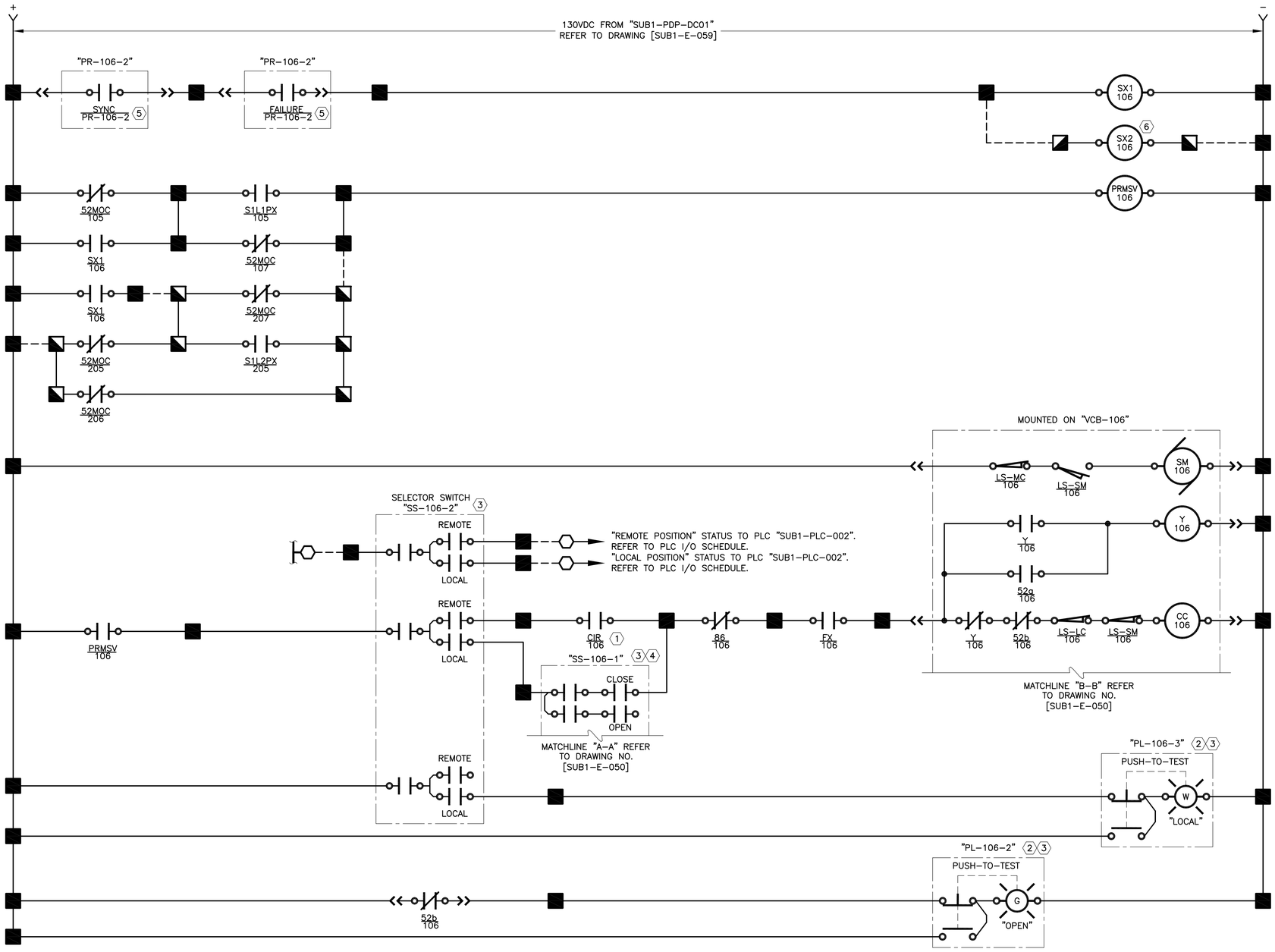

CONTROL LOGIC DEVICE LEGEND:

52a	BREAKER MOUNTED AUXILIARY CONTACT – OPEN WHEN BREAKER IS OPEN
52b	BREAKER MOUNTED AUXILIARY CONTACT – CLOSED WHEN BREAKER IS OPEN
52MOC	MECHANISM OPERATED CELL SWITCH – OPERATES AS AUXILIARY CONTACT WHEN BREAKER IS IN CONNECTED OR TEST POSITION
LS-MC	SPRING MOTOR CUTOFF SWITCH – OPEN WHEN BREAKER IS RACKED OUT
LS-SM	SPRING MOTOR LIMIT SWITCH – SHOWN WITH SPRINGS CHARGED – CHANGES STATES WHEN SPRING IS DISCHARGED
LS-LC	LATCH CHECK SWITCH – OPENS WHEN TRIP LATCH MOVES OUT OF ITS NORMAL POSITION
SM	SPRING CHARGING MOTOR
Y	ANTI-PUMP RELAY – PREVENTS ENERGIZATION OF CLOSE COIL WHEN ENERGIZED
CC	BREAKER CLOSE COIL – CLOSES BREAKER WHEN ENERGIZED
TC	BREAKER TRIP COIL – OPENS BREAKER WHEN ENERGIZED
86	PROTECTIVE RELAY TRIP LOCKOUT RELAY – MANUAL RESET
FX	PROTECTIVE RELAY FAILURE AUXILIARY RELAY – ENERGIZED WHEN PROTECTIVE RELAY STATUS IS OK
TRAN	PROTECTIVE RELAY XFER AUXILIARY RELAY
TOC	TRUCK OPERATED CONTACT – CONTACTS SHOWN WITH BREAKER RACKED OUT
SX	SYNC ENABLE AUXILIARY RELAY
S1L1PX	SUBSTATION MANAGEMENT RELAY PERMISSIVE OUTPUT AUXILIARY RELAY
S1L2PX	SUBSTATION MANAGEMENT RELAY PERMISSIVE OUTPUT AUXILIARY RELAY
PRMSV	BREAKER CLOSE PERMISSIVE AUXILIARY RELAY

KEY NOTES:

1. REFER TO DRAWING NO. [SUB1-E-057].
2. INDICATING PILOT LIGHT WITH INTEGRAL MOMENTARY ACTION "PUSH-TO-TEST" PUSH BUTTON. REFER TO ELECTRICAL SPECIFICATIONS.
3. MOUNTED ON FRONT OF PROPOSED SWITCHGEAR "SUB1-SWGR-100" SECTION 106A.
4. THREE POSITION "OPEN-OFF-CLOSE" SELECTOR SWITCH WITH "OPEN" SPRING RETURN TO CENTER "OFF" AND "CLOSE" SPRING RETURN TO CENTER "OFF". FURNISH AND INSTALL NAMEPLATE INDICATIONS FOR THE "OPEN" AND "CLOSE" POSITIONS, BUT NOT THE "OFF" POSITION.
5. REFER TO DRAWING NO. [SUB1-E-027].
6. LOCATE CONTROL RELAY IN SWITCHGEAR "SUB1-SWGR-200" SECTION NO. 6.

GENERAL NOTES:

1. ALSO REFER TO DRAWINGS [SUB1-E-057] THROUGH [SUB1-E-060] FOR ADDITIONAL CONTROL LOGIC REQUIREMENTS.

BAR LENGTH ON ORIGINAL DRAWING EQUALS ONE INCH, ADJUST SCALE ACCORDINGLY.

REUSE OF DOCUMENTS

This document, and the designs incorporated herein, is an instrument of professional service that has been developed, designed and prepared by Harutunian Engineering, Inc., and is not to be used, in whole or in part, for any other project without giving written notice to Harutunian Engineering, Inc.

NO.	DATE:	DESCRIPTION

HARUTUNIAN ENGINEERING INCORPORATED
TEXAS FIRM REGISTRATION NUMBER F-2408
ENGINEERING AND ENVIRONMENTAL CONSULTANTS
8100 CROSS PARK DRIVE
AUSTIN, TEXAS 78754

STATE OF TEXAS
SHANT HARUTUNIAN
87735
REGISTERED
PROFESSIONAL ENGINEER
10/7/2019

DESIGNED BY:	HEI
CHECKED BY:	HEI
APPROVED BY:	HEI
SUBMITTAL DATE:	OCTOBER 2019
SCALE:	AS SHOWN

SOUTH AUSTIN REGIONAL WASTEWATER TREATMENT PLANT
ELECTRICAL SUBSTATION NO. 1 REPLACEMENT PROJECT
CIP I.D.# 3333.032

SUBSTATION NO. 1
SUB1-SWGR-100 TIE BREAKER
CONTROL LOGIC – PROPOSED (SHEET 1 OF 2)

PROJECT NO: 2014-300 | SHT. 650 OF 866 | DWG NO. SUB1-E-049

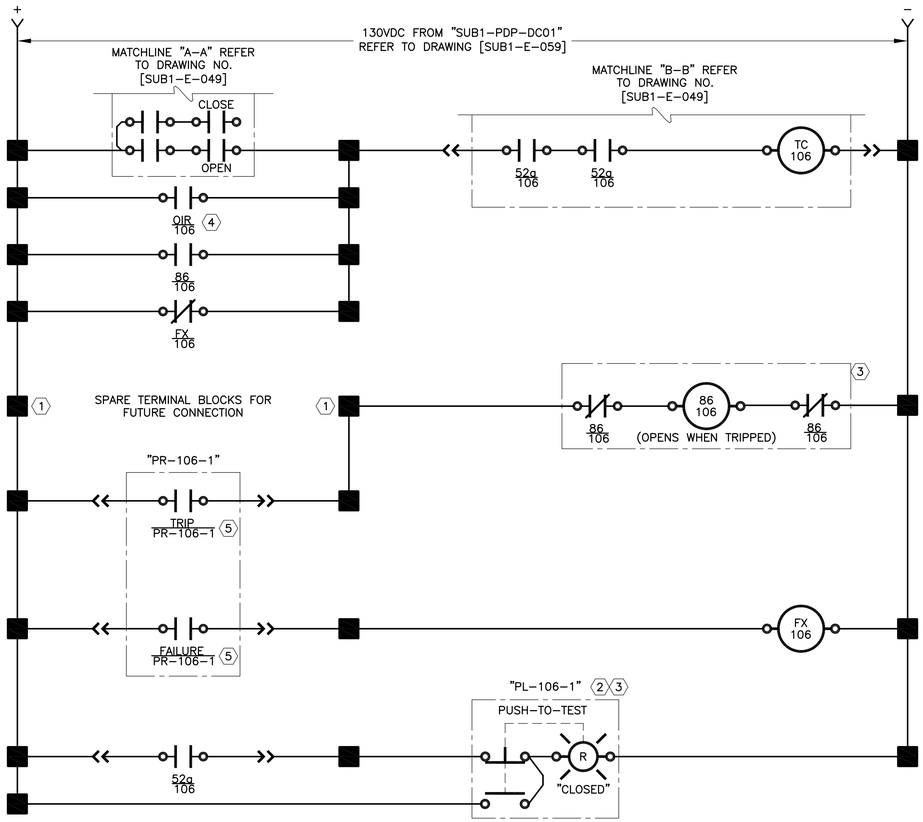

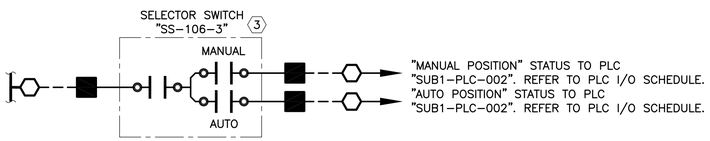

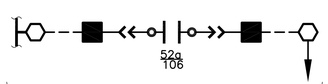

"BREAKER CLOSED" STATUS TO PLC "SUB1-PLC-002". REFER TO PLC I/O SCHEDULE.

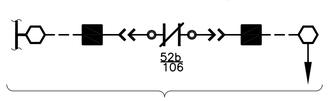

"BREAKER OPEN" STATUS TO PLC "SUB1-PLC-002". REFER TO PLC I/O SCHEDULE.

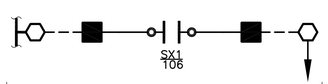

"SYNC ENABLE" STATUS TO PLC "SUB1-PLC-002". REFER TO PLC I/O SCHEDULE.

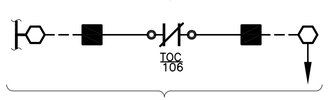

"BREAKER TRUCK POSITION" STATUS TO PLC "SUB1-PLC-002". REFER TO PLC I/O SCHEDULE.

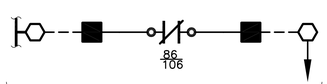

"LOCKOUT" STATUS TO PLC "SUB1-PLC-002". REFER TO PLC I/O SCHEDULE.

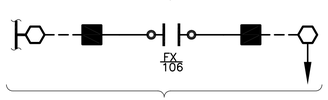

"PROTECTIVE RELAY FAILURE" STATUS TO PLC "SUB1-PLC-002". REFER TO PLC I/O SCHEDULE.

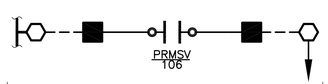

"BREAKER CLOSE PERMISSIVE" AUXILIARY RELAY STATUS TO PLC "SUB1-PLC-002". REFER TO PLC I/O SCHEDULE.

CONTROL LOGIC DEVICE LEGEND:

52a	BREAKER MOUNTED AUXILIARY CONTACT – OPEN WHEN BREAKER IS OPEN
52b	BREAKER MOUNTED AUXILIARY CONTACT – CLOSED WHEN BREAKER IS OPEN
52MOC	MECHANISM OPERATED CELL SWITCH – OPERATES AS AUXILIARY CONTACT WHEN BREAKER IS IN CONNECTED OR TEST POSITION
LS-MC	SPRING MOTOR CUTOFF SWITCH – OPEN WHEN BREAKER IS RACKED OUT
LS-SM	SPRING MOTOR LIMIT SWITCH – SHOWN WITH SPRINGS CHARGED – CHANGES STATES WHEN SPRING IS DISCHARGED
LS-LC	LATCH CHECK SWITCH – OPENS WHEN TRIP LATCH MOVES OUT OF ITS NORMAL POSITION
SM	SPRING CHARGING MOTOR
Y	ANTI-PUMP RELAY – PREVENTS ENERGIZATION OF CLOSE COIL WHEN ENERGIZED
CC	BREAKER CLOSE COIL – CLOSES BREAKER WHEN ENERGIZED
TC	BREAKER TRIP COIL – OPENS BREAKER WHEN ENERGIZED
86	PROTECTIVE RELAY TRIP LOCKOUT RELAY – MANUAL RESET
FX	PROTECTIVE RELAY FAILURE AUXILIARY RELAY – ENERGIZED WHEN PROTECTIVE RELAY STATUS IS OK
TRAN	PROTECTIVE RELAY XFER AUXILIARY RELAY
TOC	TRUCK OPERATED CONTACT – CONTACTS SHOWN WITH BREAKER RACKED OUT
SX	SYNC ENABLE AUXILIARY RELAY
S1L1PX	SUBSTATION MANAGEMENT RELAY PERMISSIVE OUTPUT AUXILIARY RELAY
S1L2PX	SUBSTATION MANAGEMENT RELAY PERMISSIVE OUTPUT AUXILIARY RELAY
PRMSV	BREAKER CLOSE PERMISSIVE AUXILIARY RELAY

KEY NOTES:

1. FURNISH AND INSTALL TERMINAL BLOCK FOR FUTURE CONNECTION.
2. INDICATING PILOT LIGHT WITH INTEGRAL MOMENTARY ACTION "PUSH-TO-TEST" PUSH BUTTON. REFER TO ELECTRICAL SPECIFICATIONS.
3. MOUNTED ON FRONT OF PROPOSED SWITCHGEAR "SUB1-SWGR-100" SECTION 106A.
4. REFER TO DRAWING NO. [SUB1-E-057].
5. REFER TO DRAWING NO. [SUB1-E-027].

GENERAL NOTES:

1. ALSO REFER TO DRAWINGS [SUB1-E-057] THROUGH [SUB1-E-060] FOR ADDITIONAL CONTROL LOGIC REQUIREMENTS.

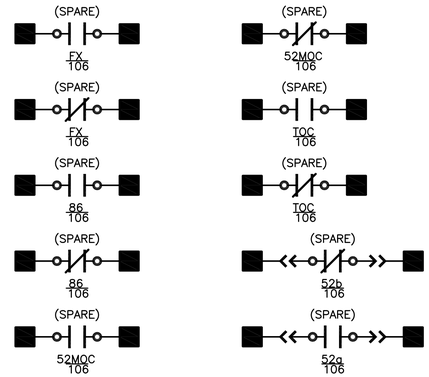

BAR LENGTH ON ORIGINAL DRAWING EQUALS ONE INCH, ADJUST SCALE ACCORDINGLY.

REUSE OF DOCUMENTS

This document, and the designs incorporated herein, is an instrument of professional service that has been developed, designed and prepared by Harutunian Engineering, Inc., and is not to be used, in whole or in part, for any other project without giving written notice to Harutunian Engineering, Inc.

NO.	DATE:	DESCRIPTION

HARUTUNIAN ENGINEERING INCORPORATED
TEXAS FIRM REGISTRATION NUMBER F-2408
ENGINEERING AND ENVIRONMENTAL CONSULTANTS
8100 CROSS PARK DRIVE
AUSTIN, TEXAS 78754

STATE OF TEXAS
SHANT HARUTUNIAN
87735
REGISTERED
PROFESSIONAL ENGINEER
10/7/2019

DESIGNED BY:	HEI
CHECKED BY:	HEI
APPROVED BY:	HEI
SUBMITTAL DATE:	OCTOBER 2019
SCALE:	AS SHOWN

SOUTH AUSTIN REGIONAL WASTEWATER TREATMENT PLANT
ELECTRICAL SUBSTATION NO. 1 REPLACEMENT PROJECT
CIP I.D.# 3333.032

SUBSTATION NO. 1
SUB1-SWGR-100 TIE BREAKER
CONTROL LOGIC – PROPOSED (SHEET 2 OF 2)

PROJECT NO: 2014-300 | SHT. 651 OF 866 | DWG NO. SUB1-E-050

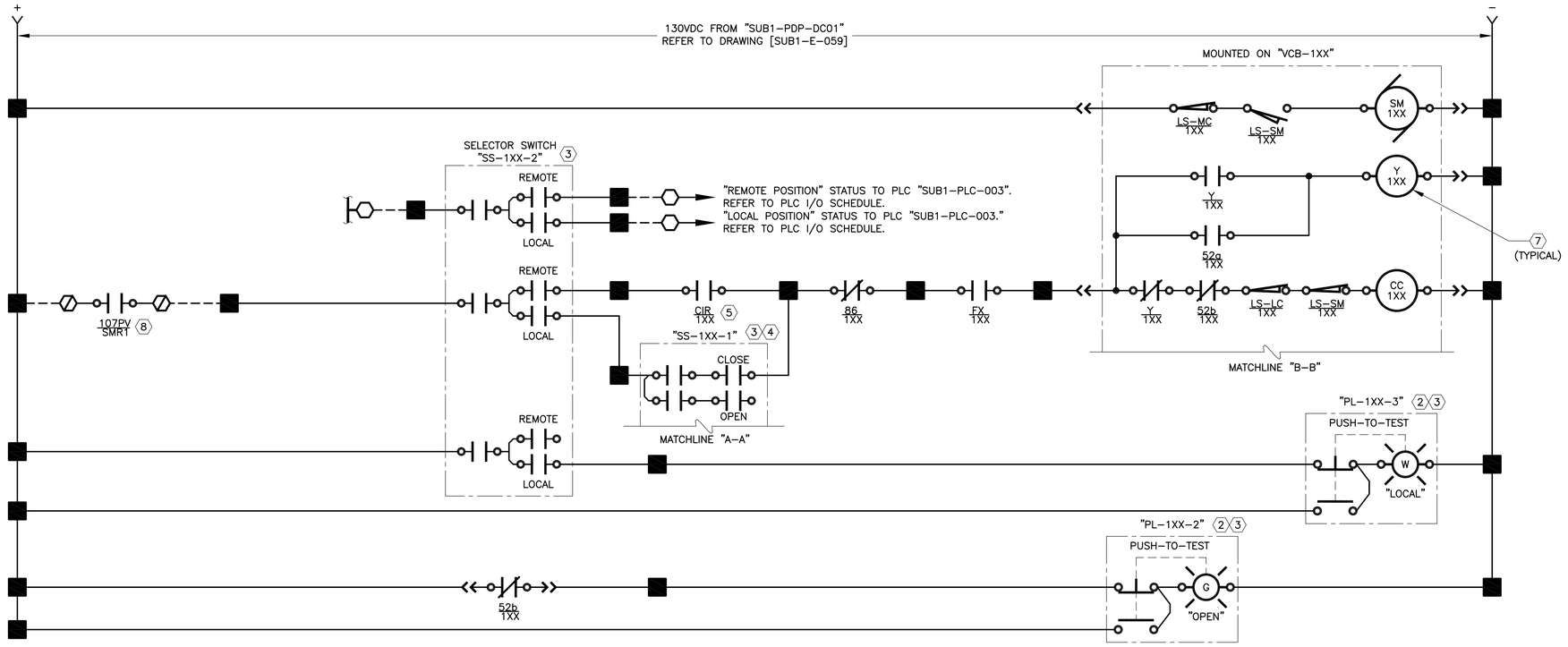

CONTROL LOGIC DEVICE LEGEND:

52a	BREAKER MOUNTED AUXILIARY CONTACT – OPEN WHEN BREAKER IS OPEN
52b	BREAKER MOUNTED AUXILIARY CONTACT – CLOSED WHEN BREAKER IS OPEN
52MOC	MECHANISM OPERATED CELL SWITCH – OPERATES AS AUXILIARY CONTACT WHEN BREAKER IS IN CONNECTED OR TEST POSITION
LS-MC	SPRING MOTOR CUTOFF SWITCH – OPEN WHEN BREAKER IS RACKED OUT
LS-SM	SPRING MOTOR LIMIT SWITCH – SHOWN WITH SPRINGS CHARGED – CHANGES STATES WHEN SPRING IS DISCHARGED
LS-LC	LATCH CHECK SWITCH – OPENS WHEN TRIP LATCH MOVES OUT OF ITS NORMAL POSITION
SM	SPRING CHARGING MOTOR
Y	ANTI-PUMP RELAY – PREVENTS ENERGIZATION OF CLOSE COIL WHEN ENERGIZED
CC	BREAKER CLOSE COIL – CLOSES BREAKER WHEN ENERGIZED
TC	BREAKER TRIP COIL – OPENS BREAKER WHEN ENERGIZED
86	PROTECTIVE RELAY TRIP LOCKOUT RELAY – MANUAL RESET
FX	PROTECTIVE RELAY FAILURE AUXILIARY RELAY – ENERGIZED WHEN PROTECTIVE RELAY STATUS IS OK
TRAN	PROTECTIVE RELAY XFER AUXILIARY RELAY
TOC	TRUCK OPERATED CONTACT – CONTACTS SHOWN WITH BREAKER RACKED OUT
SX	SYNC ENABLE AUXILIARY RELAY
S1L1PX	SUBSTATION MANAGEMENT RELAY PERMISSIVE OUTPUT AUXILIARY RELAY
S1L2PX	SUBSTATION MANAGEMENT RELAY PERMISSIVE OUTPUT AUXILIARY RELAY
PRMSV	BREAKER CLOSE PERMISSIVE AUXILIARY RELAY

KEY NOTES:

1. FURNISH AND INSTALL TERMINAL BLOCK FOR FUTURE CONNECTION.
2. INDICATING PILOT LIGHT WITH INTEGRAL MOMENTARY ACTION "PUSH-TO-TEST" PUSH BUTTON. REFER TO ELECTRICAL SPECIFICATIONS.
3. MOUNTED ON FRONT OF PROPOSED SWITCHGEAR "SUB1-SWGR-100" SECTION 1XXA.
4. THREE POSITION "OPEN-OFF-CLOSE" SELECTOR SWITCH WITH "OPEN" SPRING RETURN TO CENTER "OFF" AND "CLOSE" SPRING RETURN TO CENTER "OFF". FURNISH AND INSTALL NAMEPLATE INDICATIONS FOR THE "OPEN" AND "CLOSE" POSITIONS, BUT NOT THE "OFF" POSITION.
5. REFER TO DRAWING NO. [SUB1-E-057].
6. REFER TO DRAWING NO. [SUB1-E-029] FOR "VCB-103" AND DRAWING NO. [SUB1-E-026] FOR ALL OTHER BREAKERS.
7. THIS DRAWING IS TYPICAL FOR MULTIPLE EQUIPMENT. THE ACTUAL TAG FOR EACH EQUIPMENT WILL DIFFER FROM THAT SHOWN HERE. REFER TO THE "TAG REPLACEMENT SCHEDULE" ON THIS DRAWING TO DERIVE THE CORRESPONDING TAGS FOR EACH PROPOSED EQUIPMENT.
8. CONTACT AND ASSOCIATED FIELD WIRING ONLY APPLICABLE FOR BREAKER "VCB-107". PROVIDE JUMPER WIRE BETWEEN SWITCHGEAR TERMINAL BLOCKS FOR ALL OTHER BREAKERS.

GENERAL NOTES:

1. ALSO REFER TO DRAWINGS [SUB1-E-057] THROUGH [SUB1-E-060] FOR ADDITIONAL CONTROL LOGIC REQUIREMENTS.

TAG REPLACEMENT SCHEDULE 7

EQUIPMENT DESCRIPTION	1XX=
FEEDER BREAKER "VCB-103"	103
FEEDER BREAKER "VCB-107"	107
FEEDER BREAKER "VCB-108"	108
FEEDER BREAKER "VCB-109"	109
FEEDER BREAKER "VCB-110"	110
FEEDER BREAKER "VCB-111"	111
FEEDER BREAKER "VCB-112"	112
FEEDER BREAKER "VCB-113"	113
FEEDER BREAKER "VCB-114"	114
FEEDER BREAKER "VCB-115"	115
FEEDER BREAKER "VCB-116"	116
FEEDER BREAKER "VCB-117"	117

NOTE:
THIS DRAWING IS TYPICAL FOR FEEDER BREAKERS: "SUB1-VCB-103", "SUB1-VCB-107", "SUB1-VCB-108", "SUB1-VCB-109", "SUB1-VCB-110", "SUB1-VCB-111", "SUB1-VCB-112", "SUB1-VCB-113", "SUB1-VCB-114", "SUB1-VCB-115", "SUB1-VCB-116", AND "SUB1-VCB-117".

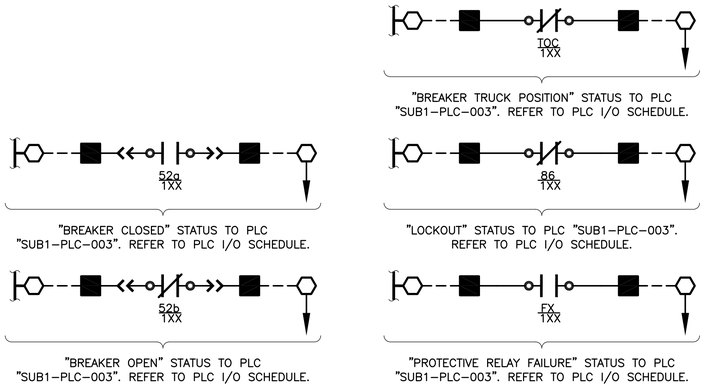

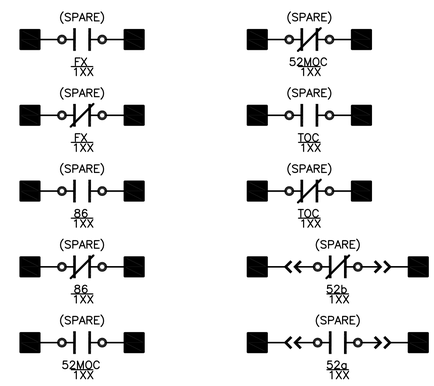

BAR LENGTH ON ORIGINAL DRAWING EQUALS ONE INCH, ADJUST SCALE ACCORDINGLY.

REUSE OF DOCUMENTS

This document, and the designs incorporated herein, is an instrument of professional service that has been developed, designed and prepared by Harutunian Engineering, Inc., and is not to be used, in whole or in part, for any other project without giving written notice to Harutunian Engineering, Inc.

NO.	DATE:	DESCRIPTION

HARUTUNIAN ENGINEERING INCORPORATED
TEXAS FIRM REGISTRATION NUMBER F-2408
ENGINEERING AND ENVIRONMENTAL CONSULTANTS
8100 CROSS PARK DRIVE
AUSTIN, TEXAS 78754

STATE OF TEXAS
SHANT HARUTUNIAN
87735
REGISTERED
PROFESSIONAL ENGINEER
10/7/2019

DESIGNED BY:	HEI
CHECKED BY:	HEI
APPROVED BY:	HEI
SUBMITTAL DATE:	OCTOBER 2019
SCALE:	AS SHOWN

SOUTH AUSTIN REGIONAL WASTEWATER TREATMENT PLANT
ELECTRICAL SUBSTATION NO. 1 REPLACEMENT PROJECT
CIP I.D.# 3333.032

SUBSTATION NO. 1
SUB1-SWGR-100 TYPICAL FEEDER BREAKER CONTROL LOGIC – PROPOSED

PROJECT NO: 2014-300 | SHT. 652 OF 866 | DWG NO. SUB1-E-051

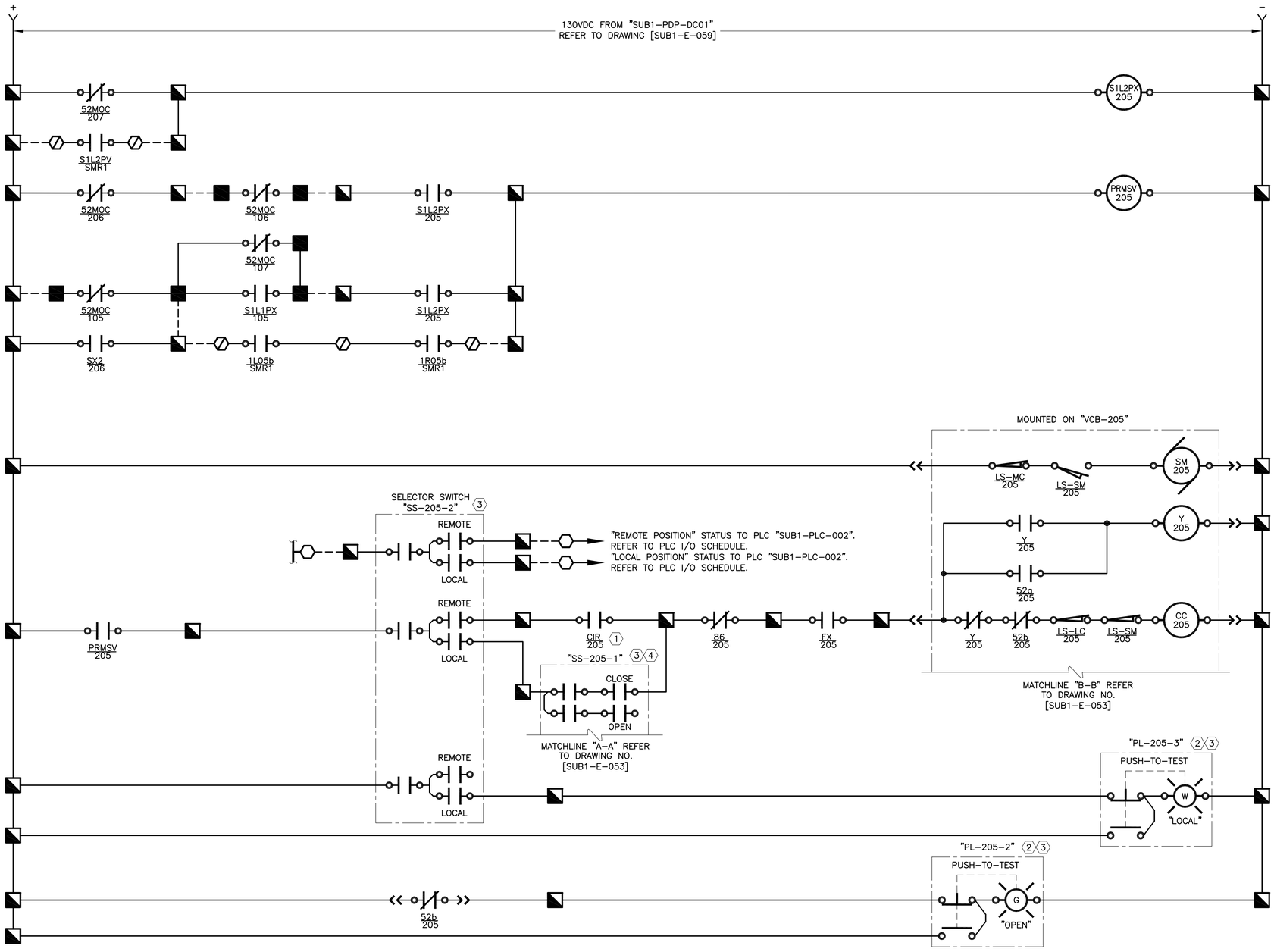

CONTROL LOGIC DEVICE LEGEND:

52a	BREAKER MOUNTED AUXILIARY CONTACT – OPEN WHEN BREAKER IS OPEN
52b	BREAKER MOUNTED AUXILIARY CONTACT – CLOSED WHEN BREAKER IS OPEN
52MOC	MECHANISM OPERATED CELL SWITCH – OPERATES AS AUXILIARY CONTACT WHEN BREAKER IS IN CONNECTED OR TEST POSITION
LS-MC	SPRING MOTOR CUTOFF SWITCH – OPEN WHEN BREAKER IS RACKED OUT
LS-SM	SPRING MOTOR LIMIT SWITCH – SHOWN WITH SPRINGS CHARGED – CHANGES STATES WHEN SPRING IS DISCHARGED
LS-LC	LATCH CHECK SWITCH – OPENS WHEN TRIP LATCH MOVES OUT OF ITS NORMAL POSITION
SM	SPRING CHARGING MOTOR
Y	ANTI-PUMP RELAY – PREVENTS ENERGIZATION OF CLOSE COIL WHEN ENERGIZED
CC	BREAKER CLOSE COIL – CLOSES BREAKER WHEN ENERGIZED
TC	BREAKER TRIP COIL – OPENS BREAKER WHEN ENERGIZED
86	PROTECTIVE RELAY TRIP LOCKOUT RELAY – MANUAL RESET
FX	PROTECTIVE RELAY FAILURE AUXILIARY RELAY – ENERGIZED WHEN PROTECTIVE RELAY STATUS IS OK
TRAN	PROTECTIVE RELAY XFER AUXILIARY RELAY
TOC	TRUCK OPERATED CONTACT – CONTACTS SHOWN WITH BREAKER RACKED OUT
SX	SYNC ENABLE AUXILIARY RELAY
S1L1PX	SUBSTATION MANAGEMENT RELAY PERMISSIVE OUTPUT AUXILIARY RELAY
S1L2PX	SUBSTATION MANAGEMENT RELAY PERMISSIVE OUTPUT AUXILIARY RELAY
PRMSV	BREAKER CLOSE PERMISSIVE AUXILIARY RELAY

KEY NOTES:

1. REFER TO DRAWING NO. [SUB1-E-058].
2. INDICATING PILOT LIGHT WITH INTEGRAL MOMENTARY ACTION "PUSH-TO-TEST" PUSH BUTTON. REFER TO ELECTRICAL SPECIFICATIONS.
3. MOUNTED ON FRONT OF PROPOSED SWITCHGEAR "SUB1-SWGR-200" SECTION 205A.
4. THREE POSITION "OPEN-OFF-CLOSE" SELECTOR SWITCH WITH "OPEN" SPRING RETURN TO CENTER "OFF" AND "CLOSE" SPRING RETURN TO CENTER "OFF". FURNISH AND INSTALL NAMEPLATE INDICATIONS FOR THE "OPEN" AND "CLOSE" POSITIONS, BUT NOT THE "OFF" POSITION.

GENERAL NOTES:

1. ALSO REFER TO DRAWINGS [SUB1-E-057] THROUGH [SUB1-E-060] FOR ADDITIONAL CONTROL LOGIC REQUIREMENTS.

BAR LENGTH ON ORIGINAL DRAWING EQUALS ONE INCH, ADJUST SCALE ACCORDINGLY.

REUSE OF DOCUMENTS

This document, and the designs incorporated herein, is an instrument of professional service that has been developed, designed and prepared by Harutunian Engineering, Inc., and is not to be used, in whole or in part, for any other project without giving written notice to Harutunian Engineering, Inc.

NO.	DATE:	DESCRIPTION

HARUTUNIAN ENGINEERING INCORPORATED

TEXAS FIRM REGISTRATION NUMBER F-2408

ENGINEERING AND ENVIRONMENTAL CONSULTANTS
8100 CROSS PARK DRIVE
AUSTIN, TEXAS 78754

STATE OF TEXAS
SHANT HARUTUNIAN
87735
REGISTERED
PROFESSIONAL ENGINEER
10/7/2019

DESIGNED BY:	HEI
CHECKED BY:	HEI
APPROVED BY:	HEI
SUBMITTAL DATE:	OCTOBER 2019
SCALE:	AS SHOWN

SOUTH AUSTIN REGIONAL WASTEWATER TREATMENT PLANT
ELECTRICAL SUBSTATION NO. 1 REPLACEMENT PROJECT
CIP I.D.# 3333.032

SUBSTATION NO. 1
SUB1-SWGR-200 MAIN BREAKER CONTROL LOGIC – PROPOSED (SHEET 1 OF 2)

PROJECT NO: 2014-300 | SHT. 653 OF 866 | DWG NO. SUB1-E-052

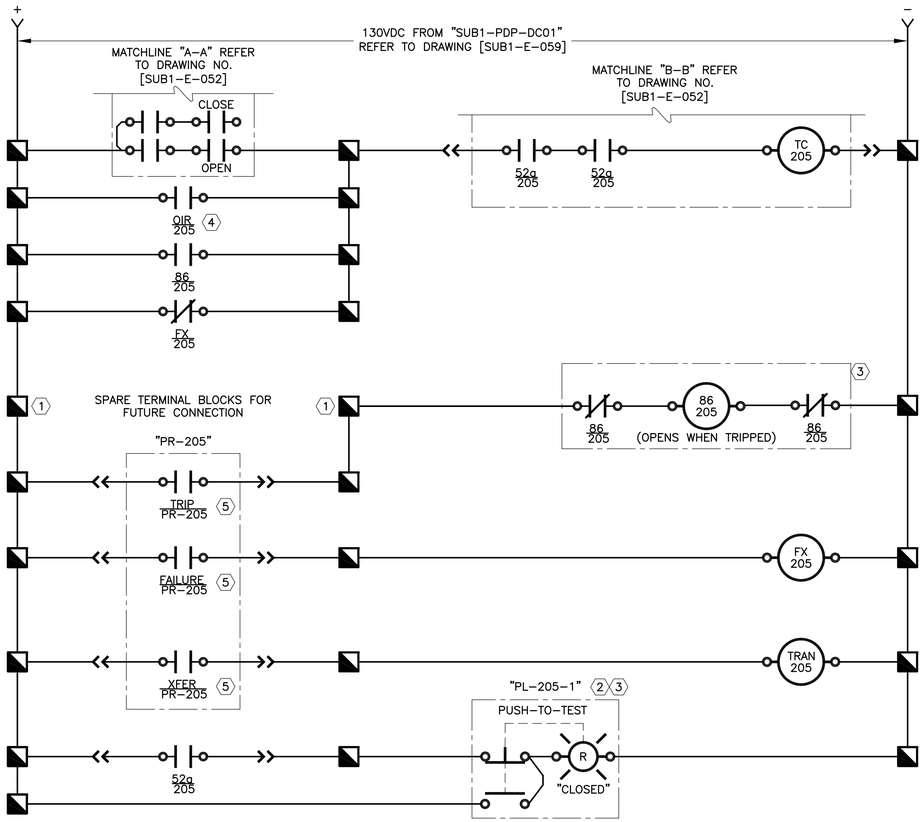

CONTROL LOGIC DEVICE LEGEND:

52a	BREAKER MOUNTED AUXILIARY CONTACT – OPEN WHEN BREAKER IS OPEN
52b	BREAKER MOUNTED AUXILIARY CONTACT – CLOSED WHEN BREAKER IS OPEN
52MOC	MECHANISM OPERATED CELL SWITCH – OPERATES AS AUXILIARY CONTACT WHEN BREAKER IS IN CONNECTED OR TEST POSITION
LS-MC	SPRING MOTOR CUTOFF SWITCH – OPEN WHEN BREAKER IS RACKED OUT
LS-SM	SPRING MOTOR LIMIT SWITCH – SHOWN WITH SPRINGS CHARGED – CHANGES STATES WHEN SPRING IS DISCHARGED
LS-LC	LATCH CHECK SWITCH – OPENS WHEN TRIP LATCH MOVES OUT OF ITS NORMAL POSITION
SM	SPRING CHARGING MOTOR
Y	ANTI-PUMP RELAY – PREVENTS ENERGIZATION OF CLOSE COIL WHEN ENERGIZED
CC	BREAKER CLOSE COIL – CLOSES BREAKER WHEN ENERGIZED
TC	BREAKER TRIP COIL – OPENS BREAKER WHEN ENERGIZED
86	PROTECTIVE RELAY TRIP LOCKOUT RELAY – MANUAL RESET
FX	PROTECTIVE RELAY FAILURE AUXILIARY RELAY – ENERGIZED WHEN PROTECTIVE RELAY STATUS IS OK
TRAN	PROTECTIVE RELAY XFER AUXILIARY RELAY
TOC	TRUCK OPERATED CONTACT – CONTACTS SHOWN WITH BREAKER RACKED OUT
SX	SYNC ENABLE AUXILIARY RELAY
S1L1PX	SUBSTATION MANAGEMENT RELAY PERMISSIVE OUTPUT AUXILIARY RELAY
S1L2PX	SUBSTATION MANAGEMENT RELAY PERMISSIVE OUTPUT AUXILIARY RELAY
PRMSV	BREAKER CLOSE PERMISSIVE AUXILIARY RELAY

KEY NOTES:

1. FURNISH AND INSTALL TERMINAL BLOCK FOR FUTURE CONNECTION.
2. INDICATING PILOT LIGHT WITH INTEGRAL MOMENTARY ACTION "PUSH-TO-TEST" PUSH BUTTON. REFER TO ELECTRICAL SPECIFICATIONS.
3. MOUNTED ON FRONT OF PROPOSED SWITCHGEAR "SUB1-SWGR-200" SECTION 205A.
4. REFER TO DRAWING NO. [SUB1-E-058].
5. REFER TO DRAWING NO. [SUB1-E-033].

GENERAL NOTES:

1. ALSO REFER TO DRAWINGS [SUB1-E-057] THROUGH [SUB1-E-060] FOR ADDITIONAL CONTROL LOGIC REQUIREMENTS.

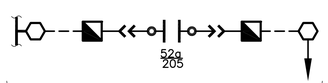

"BREAKER CLOSED" STATUS TO PLC "SUB1-PLC-002". REFER TO PLC I/O SCHEDULE.

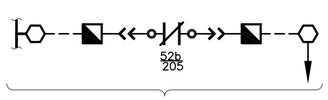

"BREAKER OPEN" STATUS TO PLC "SUB1-PLC-002". REFER TO PLC I/O SCHEDULE.

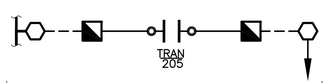

"TRANSFER" STATUS TO PLC "SUB1-PLC-002". REFER TO PLC I/O SCHEDULE.

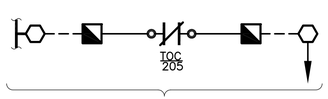

"BREAKER TRUCK POSITION" STATUS TO PLC "SUB1-PLC-002". REFER TO PLC I/O SCHEDULE.

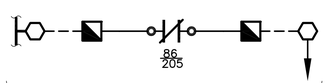

"LOCKOUT" STATUS TO PLC "SUB1-PLC-002". REFER TO PLC I/O SCHEDULE.

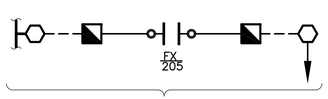

"PROTECTIVE RELAY FAILURE" STATUS TO PLC "SUB1-PLC-002". REFER TO PLC I/O SCHEDULE.

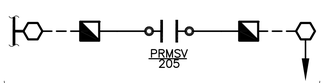

"BREAKER CLOSE PERMISSIVE" AUXILIARY RELAY STATUS TO PLC "SUB1-PLC-002". REFER TO PLC I/O SCHEDULE.

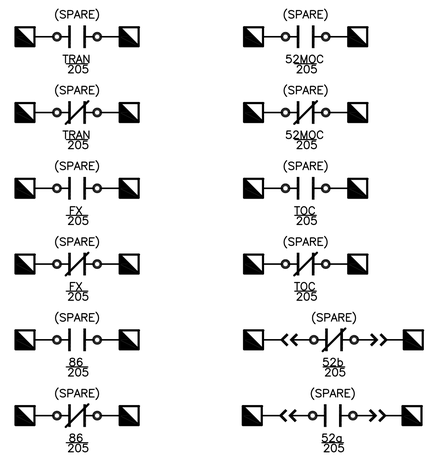

BAR LENGTH ON ORIGINAL DRAWING EQUALS ONE INCH, ADJUST SCALE ACCORDINGLY.

REUSE OF DOCUMENTS

This document, and the designs incorporated herein, is an instrument of professional service that has been developed, designed and prepared by Harutunian Engineering, Inc., and is not to be used, in whole or in part, for any other project without giving written notice to Harutunian Engineering, Inc.

NO.	DATE:	DESCRIPTION

HARUTUNIAN ENGINEERING INCORPORATED
TEXAS FIRM REGISTRATION NUMBER F-2408
ENGINEERING AND ENVIRONMENTAL CONSULTANTS
8100 CROSS PARK DRIVE
AUSTIN, TEXAS 78754

STATE OF TEXAS
SHANT HARUTUNIAN
87735
REGISTERED
PROFESSIONAL ENGINEER
10/7/2019

DESIGNED BY: HEI
CHECKED BY: HEI
APPROVED BY: HEI
SUBMITTAL DATE: OCTOBER 2019
SCALE: AS SHOWN

SOUTH AUSTIN REGIONAL WASTEWATER TREATMENT PLANT
ELECTRICAL SUBSTATION NO. 1 REPLACEMENT PROJECT
CIP I.D.# 3333.032

SUBSTATION NO. 1
SUB1-SWGR-200 MAIN BREAKER
CONTROL LOGIC – PROPOSED (SHEET 2 OF 2)

PROJECT NO: 2014-300 | SHT. 654 OF 866 | DWG NO. SUB1-E-053

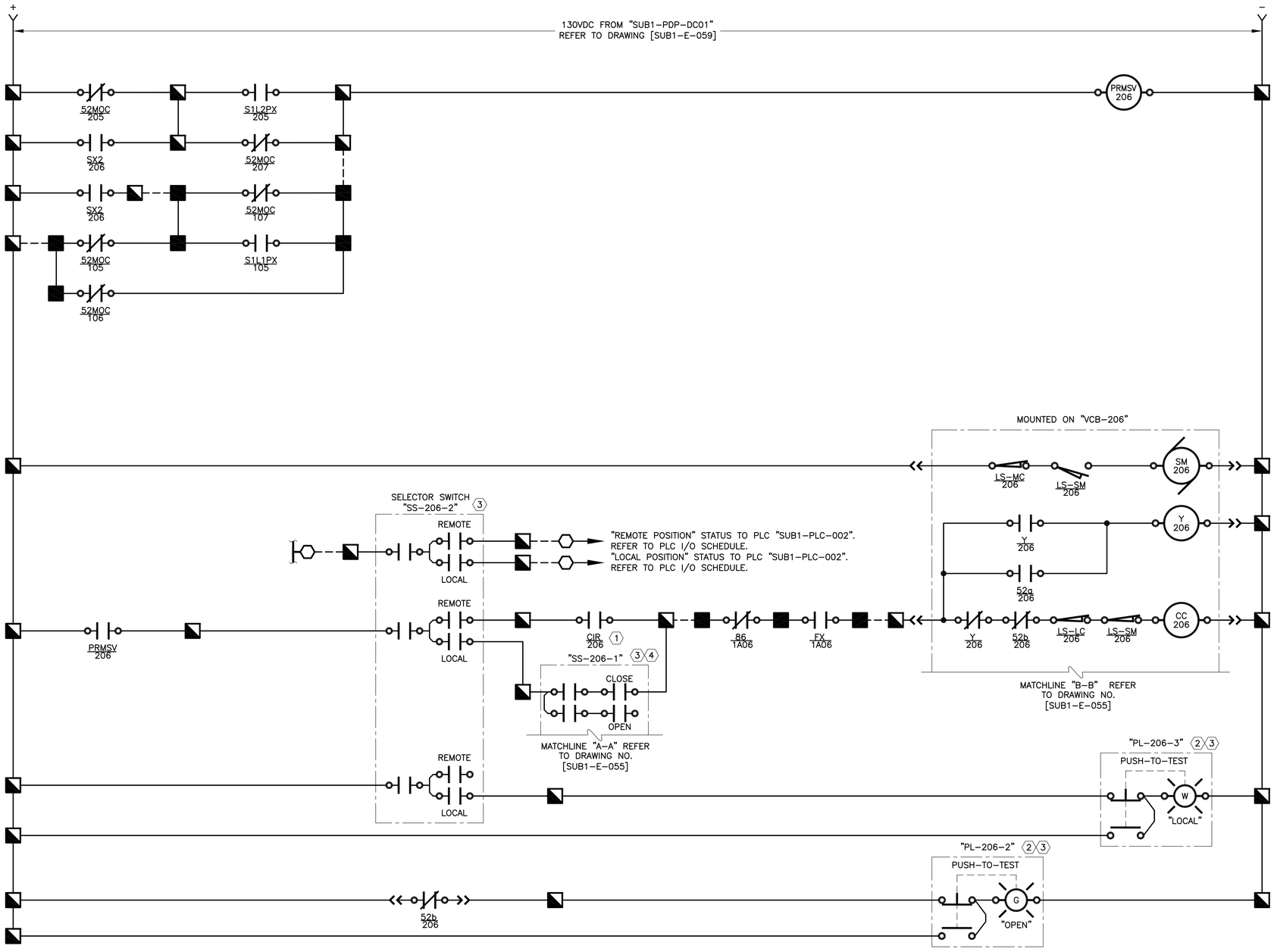

CONTROL LOGIC DEVICE LEGEND:

52a	BREAKER MOUNTED AUXILIARY CONTACT – OPEN WHEN BREAKER IS OPEN
52b	BREAKER MOUNTED AUXILIARY CONTACT – CLOSED WHEN BREAKER IS OPEN
52MOC	MECHANISM OPERATED CELL SWITCH – OPERATES AS AUXILIARY CONTACT WHEN BREAKER IS IN CONNECTED OR TEST POSITION
LS-MC	SPRING MOTOR CUTOFF SWITCH – OPEN WHEN BREAKER IS RACKED OUT
LS-SM	SPRING MOTOR LIMIT SWITCH – SHOWN WITH SPRINGS CHARGED – CHANGES STATES WHEN SPRING IS DISCHARGED
LS-LC	LATCH CHECK SWITCH – OPENS WHEN TRIP LATCH MOVES OUT OF ITS NORMAL POSITION
SM	SPRING CHARGING MOTOR
Y	ANTI-PUMP RELAY – PREVENTS ENERGIZATION OF CLOSE COIL WHEN ENERGIZED
CC	BREAKER CLOSE COIL – CLOSES BREAKER WHEN ENERGIZED
TC	BREAKER TRIP COIL – OPENS BREAKER WHEN ENERGIZED
86	PROTECTIVE RELAY TRIP LOCKOUT RELAY – MANUAL RESET
FX	PROTECTIVE RELAY FAILURE AUXILIARY RELAY – ENERGIZED WHEN PROTECTIVE RELAY STATUS IS OK
TRAN	PROTECTIVE RELAY XFER AUXILIARY RELAY
TOC	TRUCK OPERATED CONTACT – CONTACTS SHOWN WITH BREAKER RACKED OUT
SX	SYNC ENABLE AUXILIARY RELAY
S1L1PX	SUBSTATION MANAGEMENT RELAY PERMISSIVE OUTPUT AUXILIARY RELAY
S1L2PX	SUBSTATION MANAGEMENT RELAY PERMISSIVE OUTPUT AUXILIARY RELAY
PRMSV	BREAKER CLOSE PERMISSIVE AUXILIARY RELAY

KEY NOTES:

1. REFER TO DRAWING NO. [SUB1-E-058].
2. INDICATING PILOT LIGHT WITH INTEGRAL MOMENTARY ACTION "PUSH-TO-TEST" PUSH BUTTON. REFER TO ELECTRICAL SPECIFICATIONS.
3. MOUNTED ON FRONT OF PROPOSED SWITCHGEAR "SUB1-SWGR-200" SECTION 206A.
4. THREE POSITION "OPEN-OFF-CLOSE" SELECTOR SWITCH WITH "OPEN" SPRING RETURN TO CENTER "OFF" AND "CLOSE" SPRING RETURN TO CENTER "OFF". FURNISH AND INSTALL NAMEPLATE INDICATIONS FOR THE "OPEN" AND "CLOSE" POSITIONS, BUT NOT THE "OFF" POSITION.

GENERAL NOTES:

1. ALSO REFER TO DRAWINGS [SUB1-E-057] THROUGH [SUB1-E-060] FOR ADDITIONAL CONTROL LOGIC REQUIREMENTS.

BAR LENGTH ON ORIGINAL DRAWING EQUALS ONE INCH, ADJUST SCALE ACCORDINGLY.

REUSE OF DOCUMENTS

This document, and the designs incorporated herein, is an instrument of professional service that has been developed, designed and prepared by Harutunian Engineering, Inc., and is not to be used, in whole or in part, for any other project without giving written notice to Harutunian Engineering, Inc.

NO.	DATE:	DESCRIPTION

HARUTUNIAN ENGINEERING INCORPORATED

TEXAS FIRM REGISTRATION NUMBER F-2408

ENGINEERING AND ENVIRONMENTAL CONSULTANTS
8100 CROSS PARK DRIVE
AUSTIN, TEXAS 78754

STATE OF TEXAS
SHANT HARUTUNIAN
87735
REGISTERED
PROFESSIONAL ENGINEER
10/7/2019

DESIGNED BY:	HEI
CHECKED BY:	HEI
APPROVED BY:	HEI
SUBMITTAL DATE:	OCTOBER 2019
SCALE:	AS SHOWN

SOUTH AUSTIN REGIONAL WASTEWATER TREATMENT PLANT
ELECTRICAL SUBSTATION NO. 1 REPLACEMENT PROJECT
CIP I.D.# 3333.032

SUBSTATION NO. 1
SUB1-SWGR-200 TIE BREAKER
CONTROL LOGIC – PROPOSED (SHEET 1 OF 2)

PROJECT NO: 2014-300 | SHT. 655 OF 866 | DWG NO. SUB1-E-054

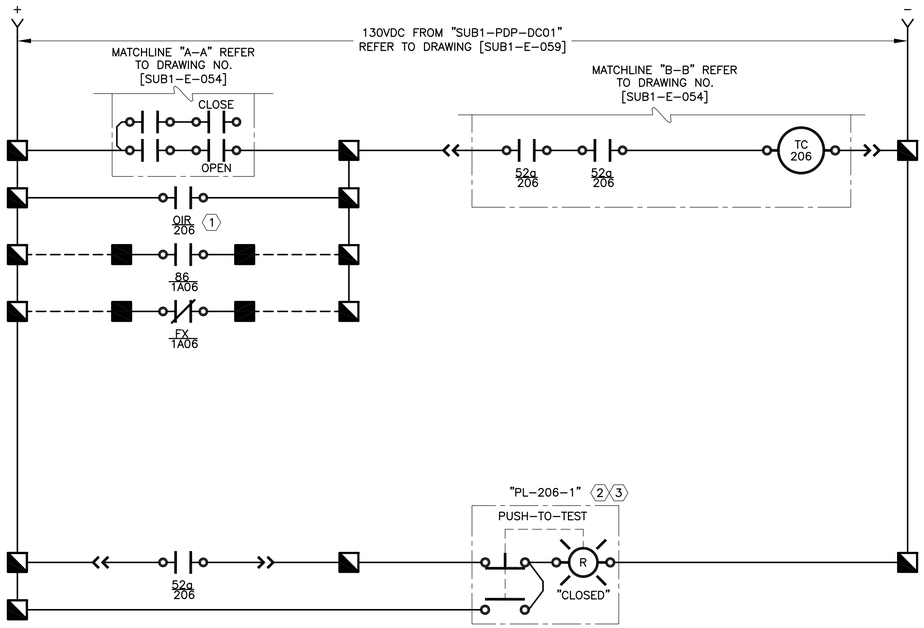

CONTROL LOGIC DEVICE LEGEND:

52a	BREAKER MOUNTED AUXILIARY CONTACT – OPEN WHEN BREAKER IS OPEN
52b	BREAKER MOUNTED AUXILIARY CONTACT – CLOSED WHEN BREAKER IS OPEN
52MOC	MECHANISM OPERATED CELL SWITCH – OPERATES AS AUXILIARY CONTACT WHEN BREAKER IS IN CONNECTED OR TEST POSITION
LS-MC	SPRING MOTOR CUTOFF SWITCH – OPEN WHEN BREAKER IS RACKED OUT
LS-SM	SPRING MOTOR LIMIT SWITCH – SHOWN WITH SPRINGS CHARGED – CHANGES STATES WHEN SPRING IS DISCHARGED
LS-LC	LATCH CHECK SWITCH – OPENS WHEN TRIP LATCH MOVES OUT OF ITS NORMAL POSITION
SM	SPRING CHARGING MOTOR
Y	ANTI-PUMP RELAY – PREVENTS ENERGIZATION OF CLOSE COIL WHEN ENERGIZED
CC	BREAKER CLOSE COIL – CLOSES BREAKER WHEN ENERGIZED
TC	BREAKER TRIP COIL – OPENS BREAKER WHEN ENERGIZED
86	PROTECTIVE RELAY TRIP LOCKOUT RELAY – MANUAL RESET
FX	PROTECTIVE RELAY FAILURE AUXILIARY RELAY – ENERGIZED WHEN PROTECTIVE RELAY STATUS IS OK
TRAN	PROTECTIVE RELAY XFER AUXILIARY RELAY
TOC	TRUCK OPERATED CONTACT – CONTACTS SHOWN WITH BREAKER RACKED OUT
SX	SYNC ENABLE AUXILIARY RELAY
S1L1PX	SUBSTATION MANAGEMENT RELAY PERMISSIVE OUTPUT AUXILIARY RELAY
S1L2PX	SUBSTATION MANAGEMENT RELAY PERMISSIVE OUTPUT AUXILIARY RELAY
PRMSV	BREAKER CLOSE PERMISSIVE AUXILIARY RELAY

KEY NOTES:

(1) REFER TO DRAWING NO. [SUB1-E-058].

(2) INDICATING PILOT LIGHT WITH INTEGRAL MOMENTARY ACTION "PUSH-TO-TEST" PUSH BUTTON. REFER TO ELECTRICAL SPECIFICATIONS.

(3) MOUNTED ON FRONT OF PROPOSED SWITCHGEAR "SUB1-SWGR-200" SECTION 206A.

GENERAL NOTES:

1. ALSO REFER TO DRAWINGS [SUB1-E-057] THROUGH [SUB1-E-060] FOR ADDITIONAL CONTROL LOGIC REQUIREMENTS.

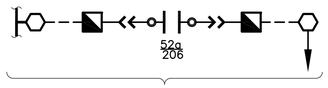

"BREAKER CLOSED" STATUS TO PLC "SUB1-PLC-002". REFER TO PLC I/O SCHEDULE.

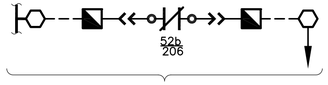

"BREAKER OPEN" STATUS TO PLC "SUB1-PLC-002". REFER TO PLC I/O SCHEDULE.

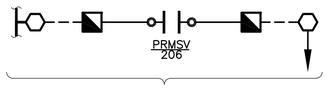

"BREAKER CLOSE PERMISSIVE" AUXILIARY RELAY STATUS TO PLC "SUB1-PLC-002". REFER TO PLC I/O SCHEDULE.

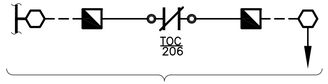

"BREAKER TRUCK POSITION" STATUS TO PLC "SUB1-PLC-002". REFER TO PLC I/O SCHEDULE.

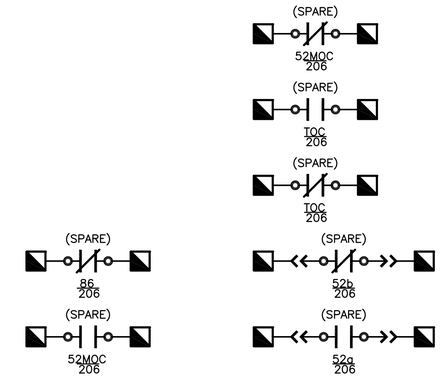

BAR LENGTH ON ORIGINAL DRAWING EQUALS ONE INCH, ADJUST SCALE ACCORDINGLY.

REUSE OF DOCUMENTS

This document, and the designs incorporated herein, is an instrument of professional service that has been developed, designed and prepared by Harutunian Engineering, Inc., and is not to be used, in whole or in part, for any other project without giving written notice to Harutunian Engineering, Inc.

NO.	DATE:	DESCRIPTION

HARUTUNIAN ENGINEERING INCORPORATED
TEXAS FIRM REGISTRATION NUMBER F-2408
ENGINEERING AND ENVIRONMENTAL CONSULTANTS
8100 CROSS PARK DRIVE
AUSTIN, TEXAS 78754

STATE OF TEXAS
SHANT HARUTUNIAN
87735
REGISTERED
PROFESSIONAL ENGINEER
10/7/2019

DESIGNED BY:	HEI
CHECKED BY:	HEI
APPROVED BY:	HEI
SUBMITTAL DATE:	OCTOBER 2019
SCALE:	AS SHOWN

SOUTH AUSTIN REGIONAL WASTEWATER TREATMENT PLANT
ELECTRICAL SUBSTATION NO. 1 REPLACEMENT PROJECT
CIP I.D.# 3333.032

SUBSTATION NO. 1
SUB1-SWGR-200 TIE BREAKER
CONTROL LOGIC – PROPOSED (SHEET 2 OF 2)

PROJECT NO: 2014-300 | SHT. 656 OF 866 | DWG NO. SUB1-E-055

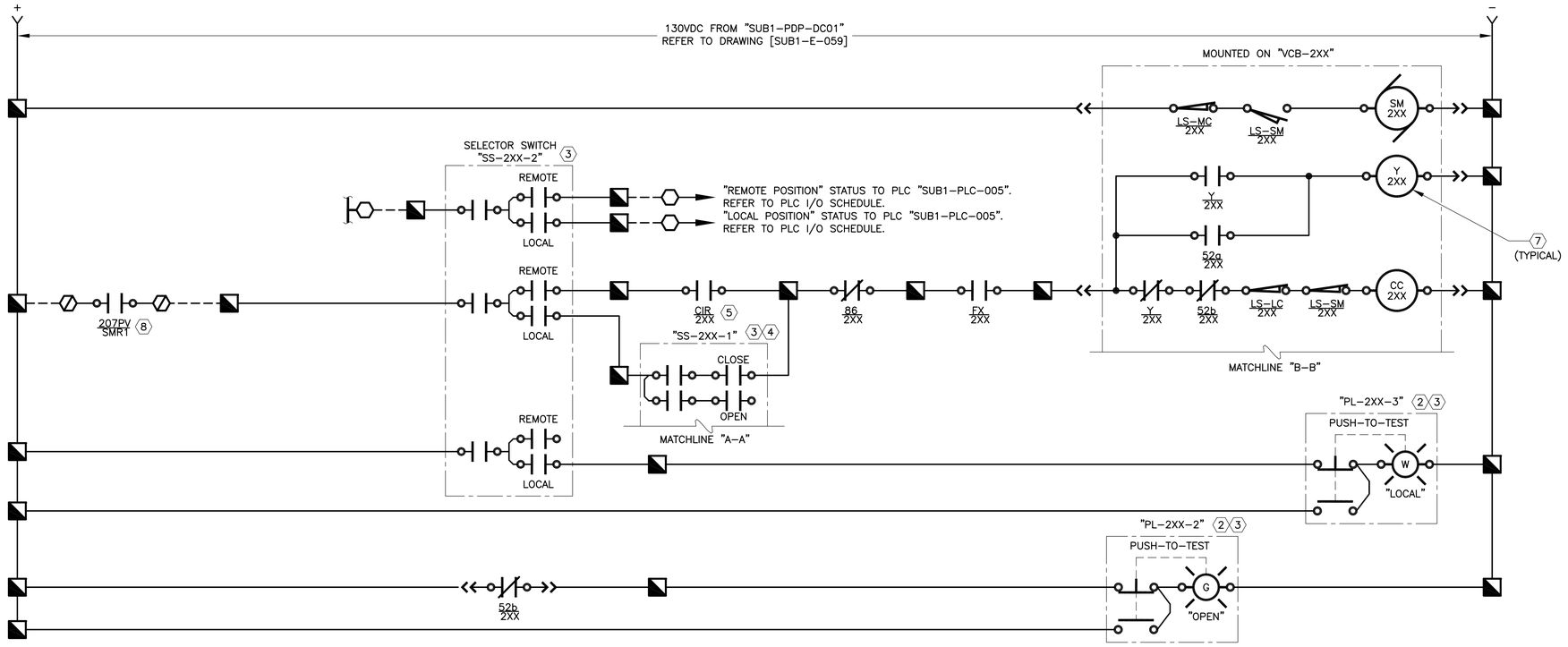

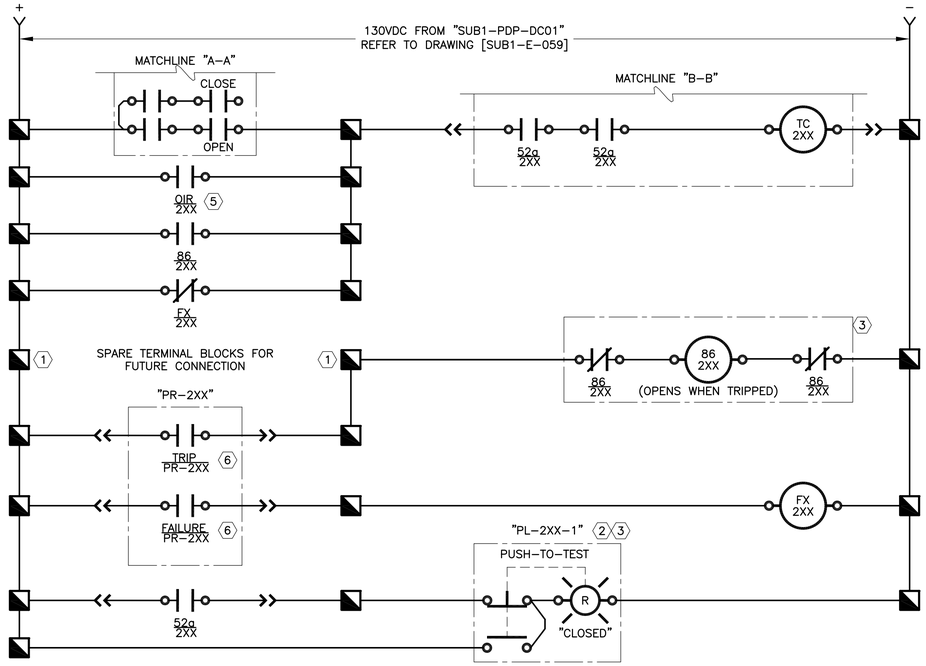

TAG REPLACEMENT SCHEDULE 7

EQUIPMENT DESCRIPTION	2XX=
FEEDER BREAKER "VCB-203"	203
FEEDER BREAKER "VCB-207"	207
FEEDER BREAKER "VCB-208"	208
FEEDER BREAKER "VCB-209"	209
FEEDER BREAKER "VCB-210"	210
FEEDER BREAKER "VCB-211"	211
FEEDER BREAKER "VCB-212"	212
FEEDER BREAKER "VCB-213"	213
FEEDER BREAKER "VCB-214"	214
FEEDER BREAKER "VCB-215"	215
FEEDER BREAKER "VCB-216"	216
FEEDER BREAKER "VCB-217"	217

NOTE:
THIS DRAWING IS TYPICAL FOR FEEDER BREAKERS: "SUB1-VCB-203", "SUB1-VCB-207", "SUB1-VCB-208", "SUB1-VCB-209", "SUB1-VCB-210", "SUB1-VCB-211", "SUB1-VCB-212", "SUB1-VCB-213", "SUB1-VCB-214", "SUB1-VCB-215", "SUB1-VCB-216", AND "SUB1-VCB-217".

"BREAKER CLOSED" STATUS TO PLC "SUB1-PLC-005". REFER TO PLC I/O SCHEDULE.

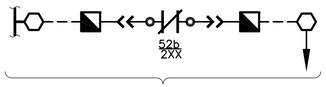

"BREAKER OPEN" STATUS TO PLC "SUB1-PLC-005". REFER TO PLC I/O SCHEDULE.

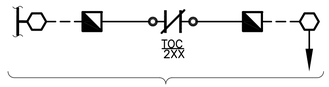

"BREAKER TRUCK POSITION" STATUS TO PLC "SUB1-PLC-005". REFER TO PLC I/O SCHEDULE.

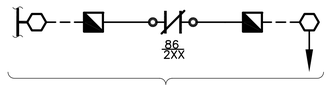

"LOCKOUT" STATUS TO PLC "SUB1-PLC-005". REFER TO PLC I/O SCHEDULE.

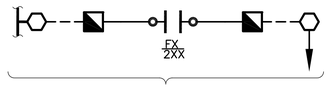

"PROTECTIVE RELAY FAILURE" STATUS TO PLC "SUB1-PLC-005". REFER TO PLC I/O SCHEDULE.

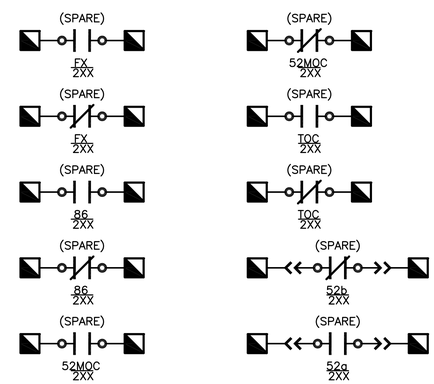

CONTROL LOGIC DEVICE LEGEND:

52a	BREAKER MOUNTED AUXILIARY CONTACT – OPEN WHEN BREAKER IS OPEN
52b	BREAKER MOUNTED AUXILIARY CONTACT – CLOSED WHEN BREAKER IS OPEN
52MOC	MECHANISM OPERATED CELL SWITCH – OPERATES AS AUXILIARY CONTACT WHEN BREAKER IS IN CONNECTED OR TEST POSITION
LS-MC	SPRING MOTOR CUTOFF SWITCH – OPEN WHEN BREAKER IS RACKED OUT
LS-SM	SPRING MOTOR LIMIT SWITCH – SHOWN WITH SPRINGS CHARGED – CHANGES STATES WHEN SPRING IS DISCHARGED
LS-LC	LATCH CHECK SWITCH – OPENS WHEN TRIP LATCH MOVES OUT OF ITS NORMAL POSITION
SM	SPRING CHARGING MOTOR
Y	ANTI-PUMP RELAY – PREVENTS ENERGIZATION OF CLOSE COIL WHEN ENERGIZED
CC	BREAKER CLOSE COIL – CLOSES BREAKER WHEN ENERGIZED
TC	BREAKER TRIP COIL – OPENS BREAKER WHEN ENERGIZED
86	PROTECTIVE RELAY TRIP LOCKOUT RELAY – MANUAL RESET
FX	PROTECTIVE RELAY FAILURE AUXILIARY RELAY – ENERGIZED WHEN PROTECTIVE RELAY STATUS IS OK
TRAN	PROTECTIVE RELAY XFER AUXILIARY RELAY
TOC	TRUCK OPERATED CONTACT – CONTACTS SHOWN WITH BREAKER RACKED OUT
SX	SYNC ENABLE AUXILIARY RELAY
S1L1PX	SUBSTATION MANAGEMENT RELAY PERMISSIVE OUTPUT AUXILIARY RELAY
S1L2PX	SUBSTATION MANAGEMENT RELAY PERMISSIVE OUTPUT AUXILIARY RELAY
PRMSV	BREAKER CLOSE PERMISSIVE AUXILIARY RELAY

KEY NOTES:

1. FURNISH AND INSTALL TERMINAL BLOCK FOR FUTURE CONNECTION.
2. INDICATING PILOT LIGHT WITH INTEGRAL MOMENTARY ACTION "PUSH-TO-TEST" PUSH BUTTON. REFER TO ELECTRICAL SPECIFICATIONS.
3. MOUNTED ON FRONT OF PROPOSED SWITCHGEAR "SUB1-SWGR-200" SECTION 2XXA.
4. THREE POSITION "OPEN-OFF-CLOSE" SELECTOR SWITCH WITH "OPEN" SPRING RETURN TO CENTER "OFF" AND "CLOSE" SPRING RETURN TO CENTER "OFF". FURNISH AND INSTALL NAMEPLATE INDICATIONS FOR THE "OPEN" AND "CLOSE" POSITIONS, BUT NOT THE "OFF" POSITION.
5. REFER TO DRAWING NO. [SUB1-E-058].
6. REFER TO DRAWING NO. [SUB1-E-032] FOR "VCB-203" AND DRAWING NO. [SUB1-E-035] FOR ALL OTHER BREAKERS.
7. THIS DRAWING IS TYPICAL FOR MULTIPLE EQUIPMENT. THE ACTUAL TAG FOR EACH EQUIPMENT WILL DIFFER FROM THAT SHOWN HERE. REFER TO THE "TAG REPLACEMENT SCHEDULE" ON THIS DRAWING TO DERIVE THE CORRESPONDING TAGS FOR EACH PROPOSED EQUIPMENT.
8. CONTACT AND ASSOCIATED FIELD WIRING ONLY APPLICABLE FOR BREAKER "VCB-207". PROVIDE JUMPER WIRE BETWEEN SWITCHGEAR TERMINAL BLOCKS FOR ALL OTHER BREAKERS.

GENERAL NOTES:

1. ALSO REFER TO DRAWINGS [SUB1-E-057] THROUGH [SUB1-E-060] FOR ADDITIONAL CONTROL LOGIC REQUIREMENTS.

BAR LENGTH ON ORIGINAL DRAWING EQUALS ONE INCH, ADJUST SCALE ACCORDINGLY.

REUSE OF DOCUMENTS

This document, and the designs incorporated herein, is an instrument of professional service that has been developed, designed and prepared by Harutunian Engineering, Inc., and is not to be used, in whole or in part, for any other project without giving written notice to Harutunian Engineering, Inc.

NO.	DATE:	DESCRIPTION

HARUTUNIAN ENGINEERING INCORPORATED
TEXAS FIRM REGISTRATION NUMBER F-2408
ENGINEERING AND ENVIRONMENTAL CONSULTANTS
8100 CROSS PARK DRIVE
AUSTIN, TEXAS 78754

STATE OF TEXAS
SHANT HARUTUNIAN
87735
REGISTERED
PROFESSIONAL ENGINEER
10/7/2019

DESIGNED BY:	HEI
CHECKED BY:	HEI
APPROVED BY:	HEI
SUBMITTAL DATE:	OCTOBER 2019
SCALE:	AS SHOWN

SOUTH AUSTIN REGIONAL WASTEWATER TREATMENT PLANT
ELECTRICAL SUBSTATION NO. 1 REPLACEMENT PROJECT
CIP I.D.# 3333.032

SUBSTATION NO. 1
SUB1-SWGR-200 TYPICAL FEEDER BREAKER CONTROL LOGIC – PROPOSED

PROJECT NO: 2014-300 | SHT. 657 OF 866 | DWG NO. SUB1-E-056

CONTROL LOGIC DEVICE LEGEND:

OIR "OPEN BREAKER" COMMAND AUXILIARY RELAY

CIR "CLOSE BREAKER" COMMAND AUXILIARY RELAY

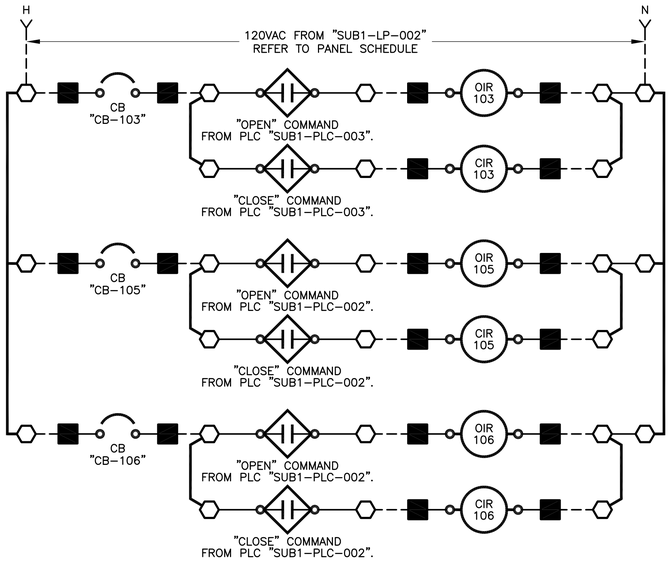

"SUB1-SWGR-100" MAIN & TIE BREAKER CONTROL WIRING SCHEMATIC

SCALE: N.T.S.

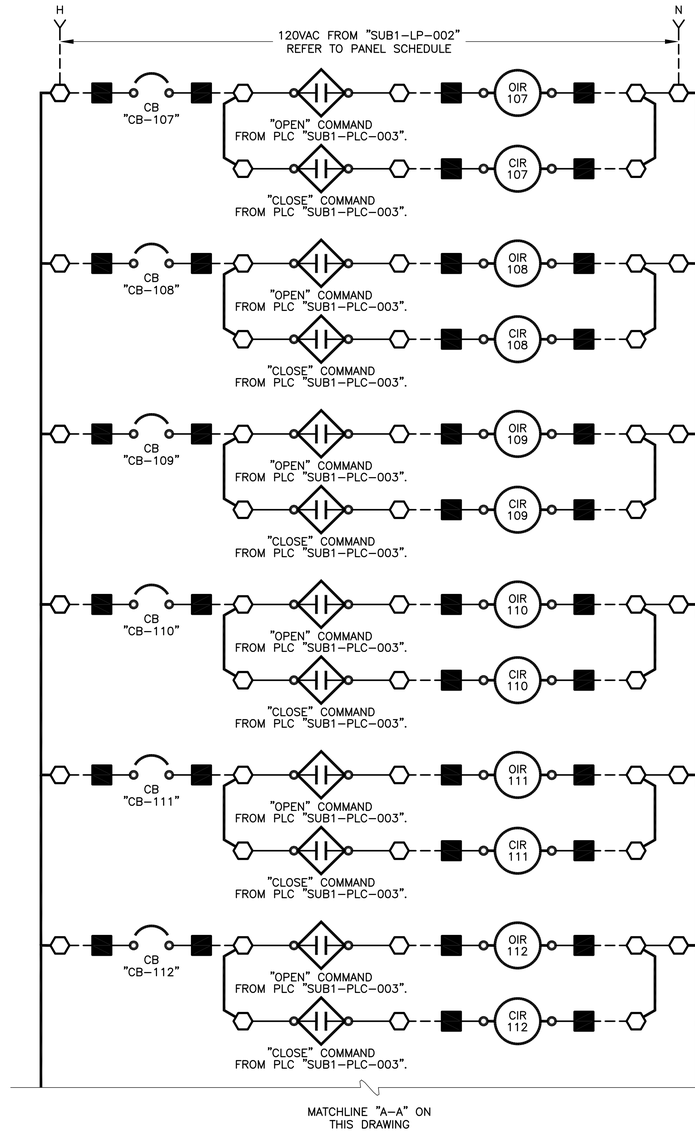

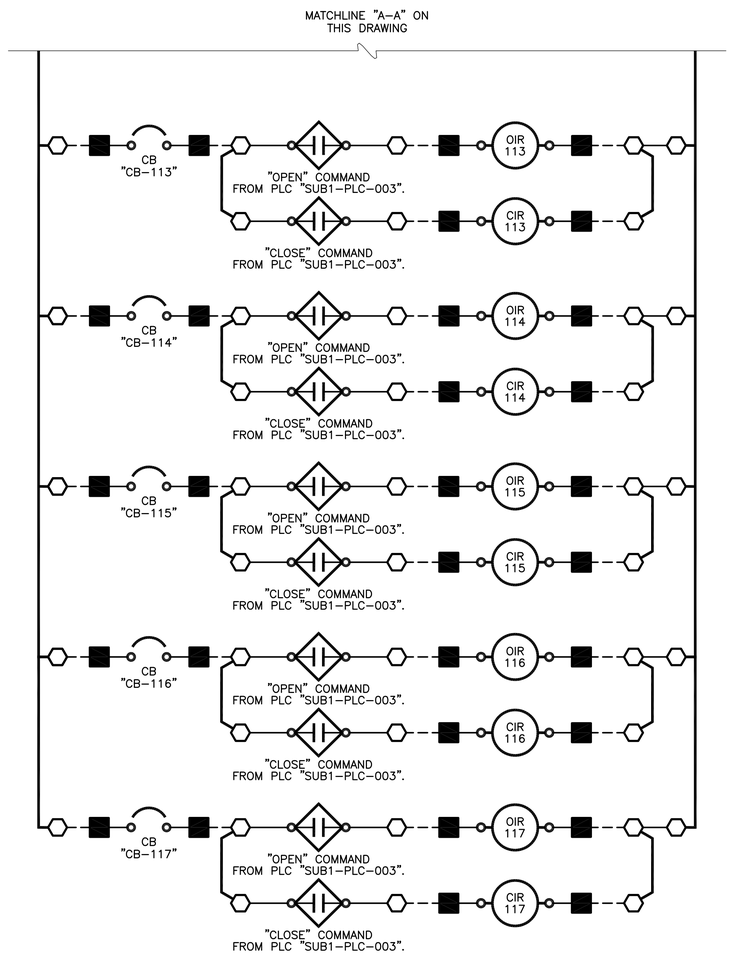

"SUB1-SWGR-100" FEEDER BREAKER CONTROL WIRING SCHEMATIC

SCALE: N.T.S.

BAR LENGTH ON ORIGINAL DRAWING EQUALS ONE INCH, ADJUST SCALE ACCORDINGLY.

REUSE OF DOCUMENTS

This document, and the designs incorporated herein, is an instrument of professional service that has been developed, designed and prepared by Harutunian Engineering, Inc., and is not to be used, in whole or in part, for any other project without giving written notice to Harutunian Engineering, Inc.

NO.	DATE:	DESCRIPTION

HARUTUNIAN ENGINEERING INCORPORATED

TEXAS FIRM REGISTRATION NUMBER F-2408

ENGINEERING AND ENVIRONMENTAL CONSULTANTS
8100 CROSS PARK DRIVE
AUSTIN, TEXAS 78754

STATE OF TEXAS
SHANT HARUTUNIAN
87735
REGISTERED
PROFESSIONAL ENGINEER
10/7/2019

DESIGNED BY:	HEI
CHECKED BY:	HEI
APPROVED BY:	HEI
SUBMITTAL DATE:	OCTOBER 2019
SCALE:	AS SHOWN

SOUTH AUSTIN REGIONAL WASTEWATER TREATMENT PLANT
ELECTRICAL SUBSTATION NO. 1 REPLACEMENT PROJECT
CIP I.D.# 3333.032

SUBSTATION NO. 1 AUXILIARY CONTROL LOGIC – PROPOSED (SHEET 1 OF 2)

PROJECT NO: 2014-300 | SHT. 658 OF 866 | DWG NO. SUB1-E-057

CONTROL LOGIC DEVICE LEGEND:

OIR	"OPEN BREAKER" COMMAND AUXILIARY RELAY
CIR	"CLOSE BREAKER" COMMAND AUXILIARY RELAY

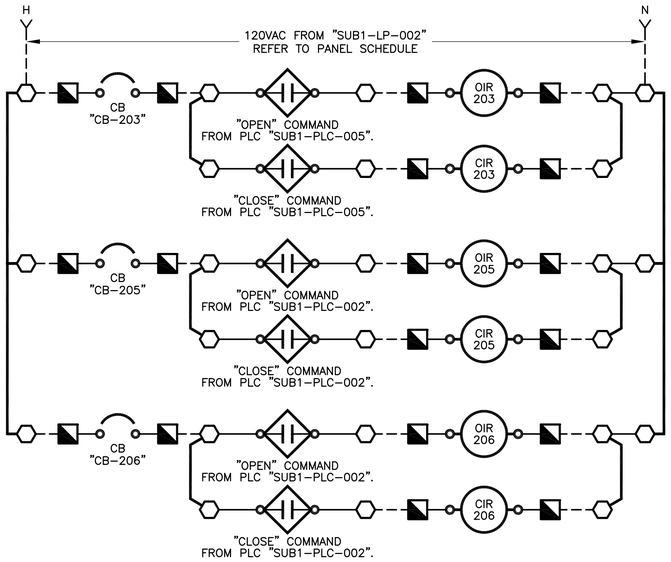

"SUB1-SWGR-200" MAIN & TIE BREAKER CONTROL WIRING SCHEMATIC

SCALE: N.T.S.

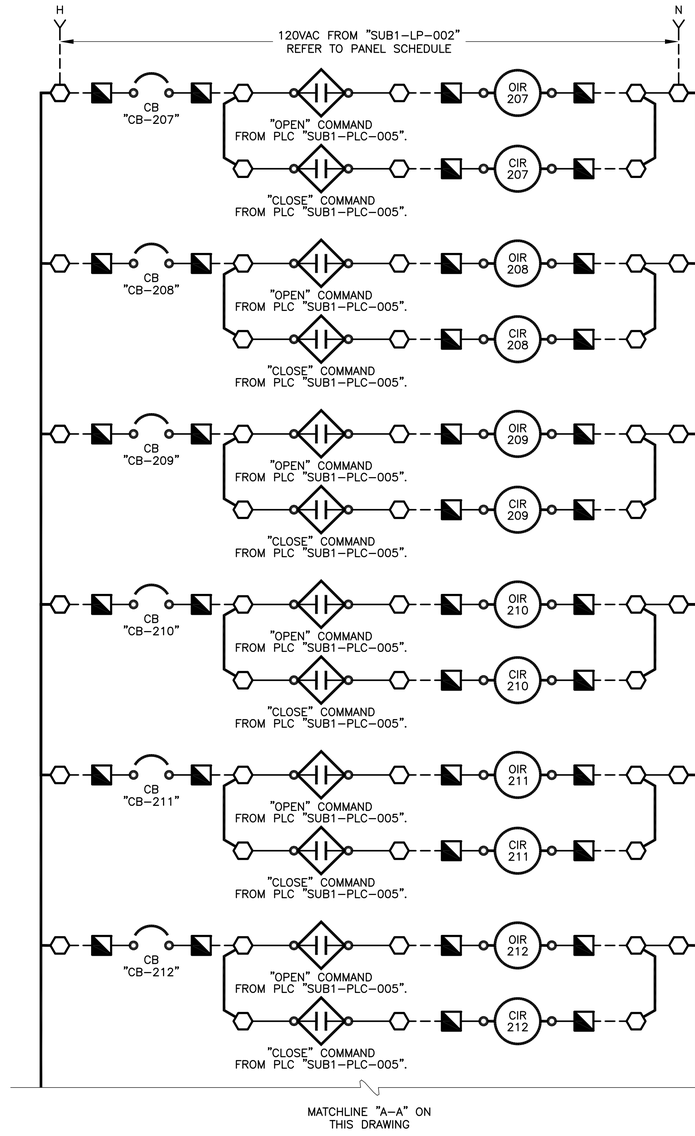

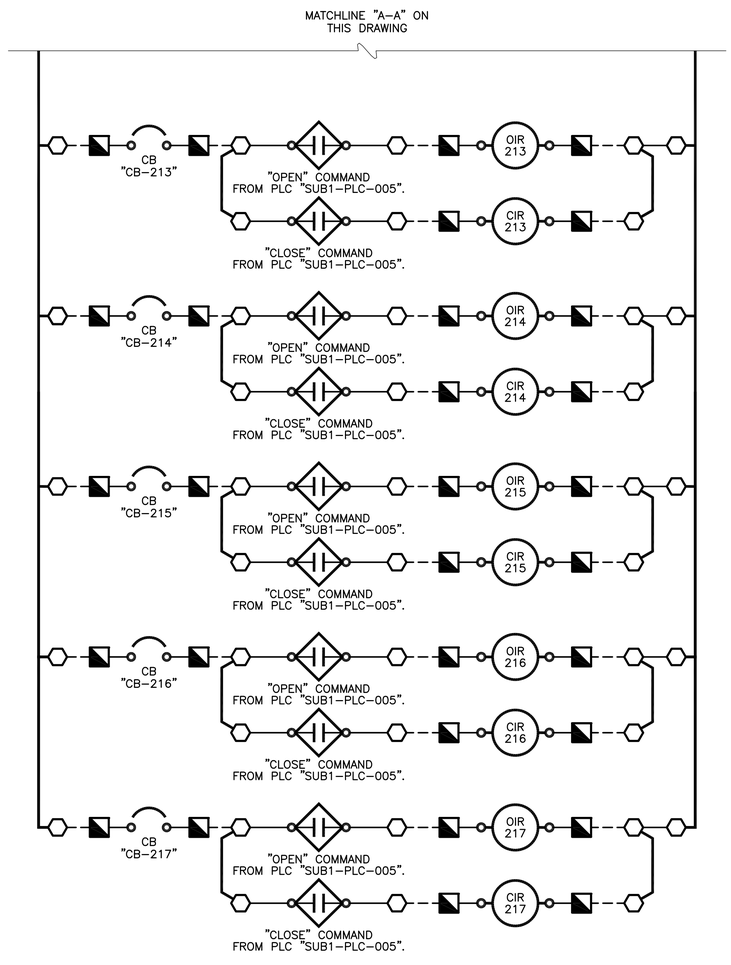

"SUB1-SWGR-200" FEEDER BREAKER CONTROL WIRING SCHEMATIC

SCALE: N.T.S.

BAR LENGTH ON ORIGINAL DRAWING EQUALS ONE INCH, ADJUST SCALE ACCORDINGLY.

REUSE OF DOCUMENTS

This document, and the designs incorporated herein, is an instrument of professional service that has been developed, designed and prepared by Harutunian Engineering, Inc., and is not to be used, in whole or in part, for any other project without giving written notice to Harutunian Engineering, Inc.

NO.	DATE:	DESCRIPTION

HARUTUNIAN ENGINEERING INCORPORATED
TEXAS FIRM REGISTRATION NUMBER F-2408
ENGINEERING AND ENVIRONMENTAL CONSULTANTS
8100 CROSS PARK DRIVE
AUSTIN, TEXAS 78754

STATE OF TEXAS
SHANT HARUTUNIAN
87735
REGISTERED
PROFESSIONAL ENGINEER
10/7/2019

DESIGNED BY:	HEI
CHECKED BY:	HEI
APPROVED BY:	HEI
SUBMITTAL DATE:	OCTOBER 2019
SCALE:	AS SHOWN

SOUTH AUSTIN REGIONAL WASTEWATER TREATMENT PLANT
ELECTRICAL SUBSTATION NO. 1 REPLACEMENT PROJECT
CIP I.D.# 3333.032

SUBSTATION NO. 1
AUXILIARY
CONTROL LOGIC – PROPOSED (SHEET 2 OF 2)

PROJECT NO: 2014-300 | SHT. 659 OF 866 | DWG NO. SUB1-E-058

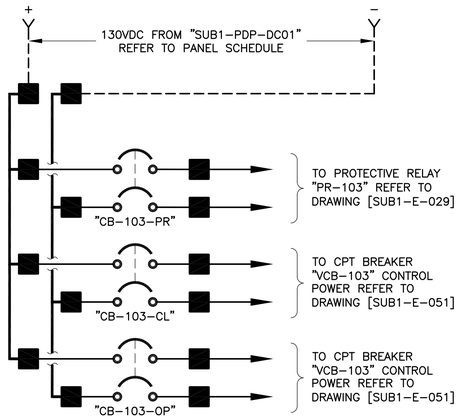

"SUB1-SWGR-100" CPT1 BREAKER "VCB-103" 130VDC SUPPLY POWER

SCALE: N.T.S.

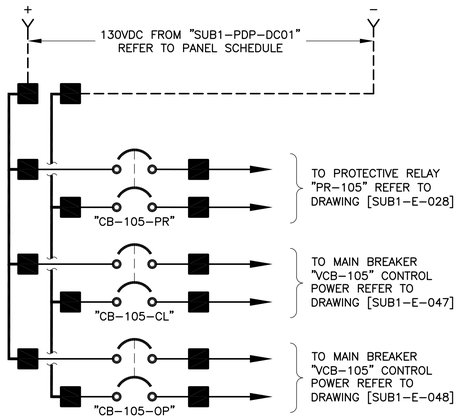

"SUB1-SWGR-100" MAIN BREAKER "VCB-105" 130VDC SUPPLY POWER

SCALE: N.T.S.

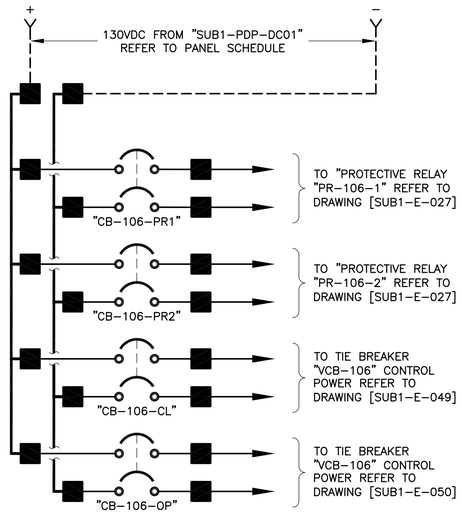

"SUB1-SWGR-100" TIE BREAKER "VCB-106" 130VDC SUPPLY POWER

SCALE: N.T.S.

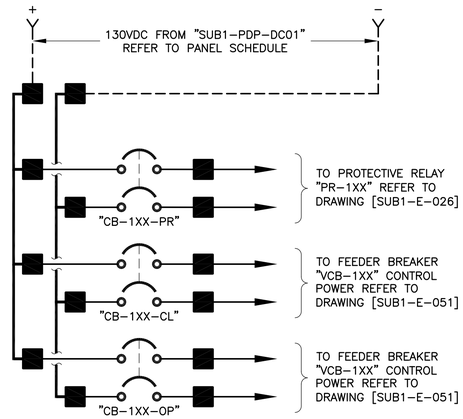

"SUB1-SWGR-100" FEEDER BREAKER ⟨1⟩ "VCB-1XX" 130VDC SUPPLY POWER

SCALE: N.T.S.

TAG REPLACEMENT TABLE ⟨1⟩

EQUIPMENT DESCRIPTION	1XX=
FEEDER BREAKER "VCB-107"	107
FEEDER BREAKER "VCB-108"	108
FEEDER BREAKER "VCB-109"	109
FEEDER BREAKER "VCB-110"	110
FEEDER BREAKER "VCB-111"	111
FEEDER BREAKER "VCB-112"	112
FEEDER BREAKER "VCB-113"	113
FEEDER BREAKER "VCB-114"	114
FEEDER BREAKER "VCB-115"	115
FEEDER BREAKER "VCB-116"	116
FEEDER BREAKER "VCB-117"	117

NOTE:
THIS DRAWING IS TYPICAL FOR FEEDER BREAKERS: "SUB1-VCB-107", "SUB1-VCB-108", "SUB1-VCB-109", "SUB1-VCB-110", "SUB1-VCB-111", "SUB1-VCB-112", "SUB1-VCB-113", "SUB1-VCB-114", "SUB1-VCB-115", "SUB1-VCB-116", AND "SUB1-VCB-117".

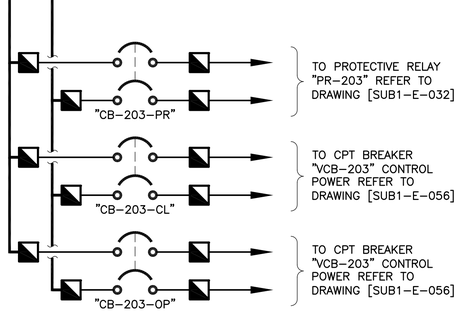

"SUB1-SWGR-200" CPT2 BREAKER "VCB-203" 130VDC SUPPLY POWER

SCALE: N.T.S.

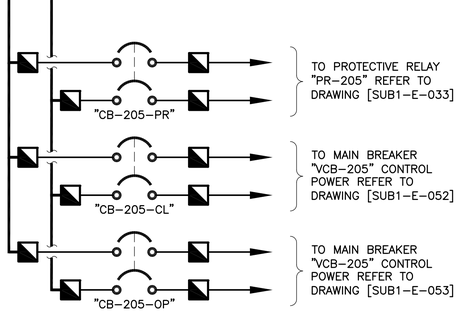

"SUB1-SWGR-200" MAIN BREAKER "VCB-205" 130VDC SUPPLY POWER

SCALE: N.T.S.

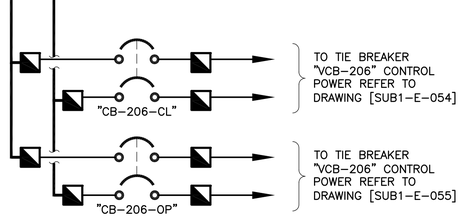

"SUB1-SWGR-200" TIE BREAKER "VCB-206" 130VDC SUPPLY POWER

SCALE: N.T.S.

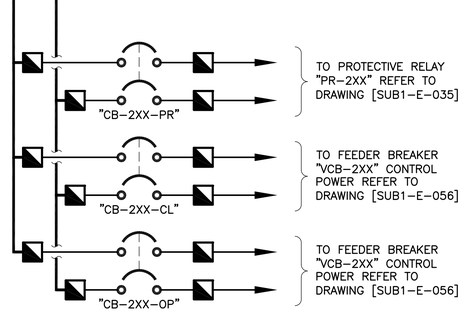

"SUB1-SWGR-200" FEEDER BREAKER ⟨1⟩ "VCB-2XX" 130VDC SUPPLY POWER

SCALE: N.T.S.

TAG REPLACEMENT TABLE ⟨1⟩

EQUIPMENT DESCRIPTION	2XX=
FEEDER BREAKER "VCB-207"	207
FEEDER BREAKER "VCB-208"	208
FEEDER BREAKER "VCB-209"	209
FEEDER BREAKER "VCB-210"	210
FEEDER BREAKER "VCB-211"	211
FEEDER BREAKER "VCB-212"	212
FEEDER BREAKER "VCB-213"	213
FEEDER BREAKER "VCB-214"	214
FEEDER BREAKER "VCB-215"	215
FEEDER BREAKER "VCB-216"	216
FEEDER BREAKER "VCB-217"	217

NOTE:
THIS DRAWING IS TYPICAL FOR FEEDER BREAKERS: "SUB1-VCB-207", "SUB1-VCB-208", "SUB1-VCB-209", "SUB1-VCB-210", "SUB1-VCB-211", "SUB1-VCB-212", "SUB1-VCB-213", "SUB1-VCB-214", "SUB1-VCB-215", "SUB1-VCB-216", AND "SUB1-VCB-217".

KEY NOTES:

⟨1⟩ THIS DRAWING IS TYPICAL FOR MULTIPLE EQUIPMENT. THE ACTUAL TAG FOR EACH EQUIPMENT WILL DIFFER FROM THAT SHOWN HERE. REFER TO THE TAG REPLACEMENT SCHEDULE ON THIS DRAWING TO DERIVE THE CORRESPONDING TAGS FOR EACH PROPOSED EQUIPMENT.

BAR LENGTH ON ORIGINAL DRAWING EQUALS ONE INCH, ADJUST SCALE ACCORDINGLY.

REUSE OF DOCUMENTS

This document, and the designs incorporated herein, is an instrument of professional service that has been developed, designed and prepared by Harutunian Engineering, Inc., and is not to be used, in whole or in part, for any other project without giving written notice to Harutunian Engineering, Inc.

NO.	DATE:	DESCRIPTION

HARUTUNIAN ENGINEERING INCORPORATED
TEXAS FIRM REGISTRATION NUMBER F-2408
ENGINEERING AND ENVIRONMENTAL CONSULTANTS
8100 CROSS PARK DRIVE
AUSTIN, TEXAS 78754

STATE OF TEXAS
SHANT HARUTUNIAN
87735
REGISTERED
PROFESSIONAL ENGINEER
10/7/2019

DESIGNED BY:	HEI
CHECKED BY:	HEI
APPROVED BY:	HEI
SUBMITTAL DATE:	OCTOBER 2019
SCALE:	AS SHOWN

SOUTH AUSTIN REGIONAL WASTEWATER TREATMENT PLANT
ELECTRICAL SUBSTATION NO. 1 REPLACEMENT PROJECT
CIP I.D.# 3333.032

SUBSTATION NO. 1
DC BREAKER CONTROL POWER WIRING SCHEMATICS – PROPOSED

PROJECT NO: 2014-300 | SHT. 660 OF 866 | DWG NO. SUB1-E-059

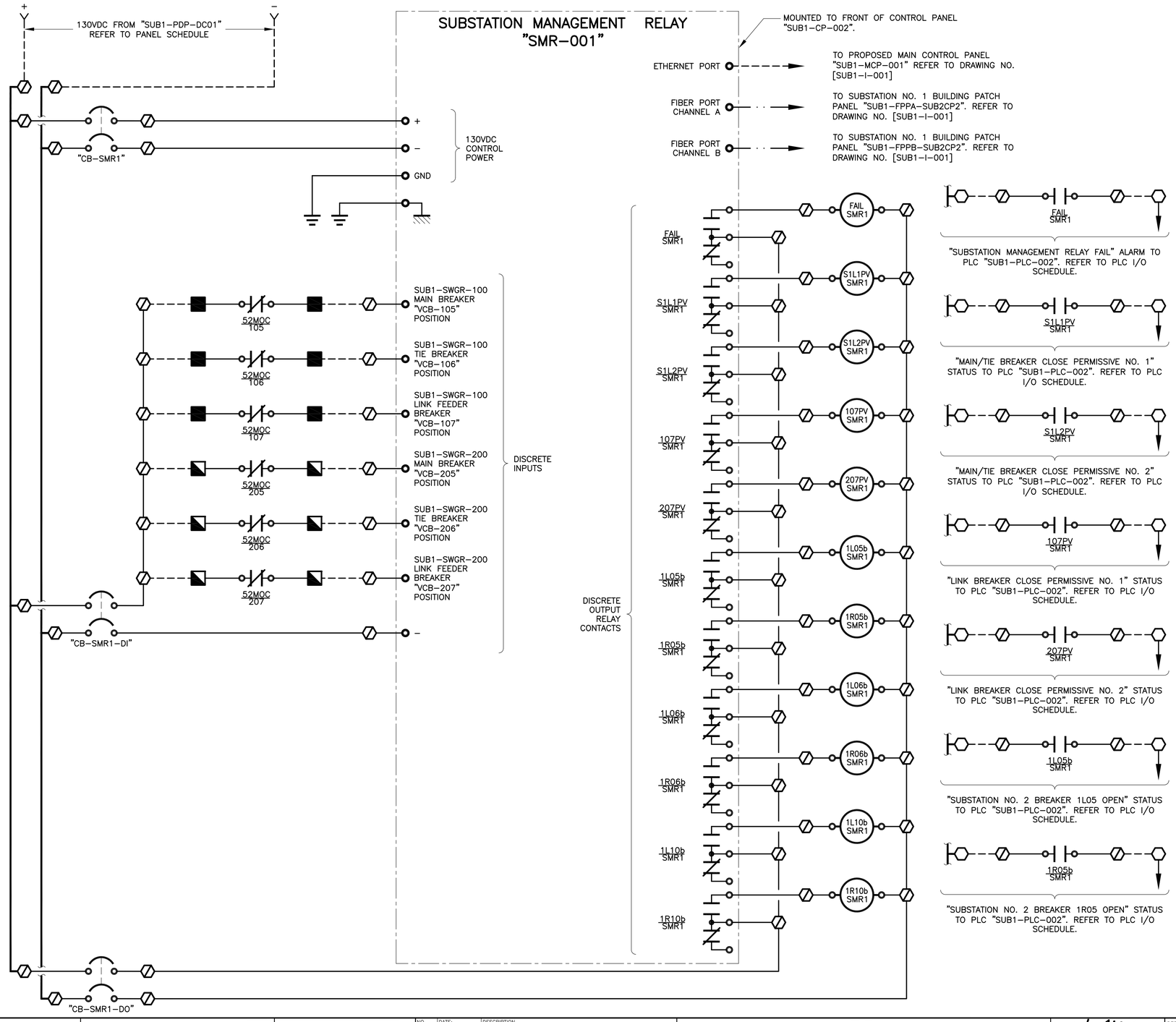

CONTROL LOGIC DEVICE LEGEND:

S1L1PV	"MAIN/TIE BREAKER CLOSE PERMISSIVE NO. 1" AUXILIARY RELAY
S1L2PV	"MAIN/TIE BREAKER CLOSE PERMISSIVE NO. 2" AUXILIARY RELAY
107PV	"LINK BREAKER CLOSE PERMISSIVE NO. 1" AUXILIARY RELAY
207PV	"LINK BREAKER CLOSE PERMISSIVE NO. 2" AUXILIARY RELAY
1L05b	SUBSTATION NO. 2 BREAKER "1L05" AUXILIARY RELAY
1R05b	SUBSTATION NO. 2 BREAKER "1R05" AUXILIARY RELAY
1L06b	SUBSTATION NO. 2 BREAKER "1L06" AUXILIARY RELAY
1R06b	SUBSTATION NO. 2 BREAKER "1R06" AUXILIARY RELAY
1L10b	SUBSTATION NO. 2 BREAKER "1L10" AUXILIARY RELAY
1R10b	SUBSTATION NO. 2 BREAKER "1R10" AUXILIARY RELAY

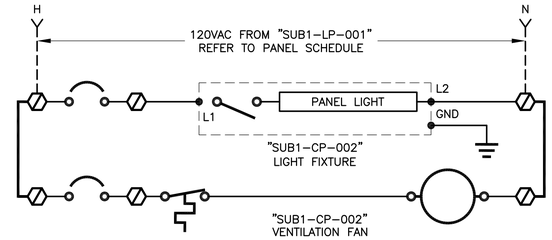

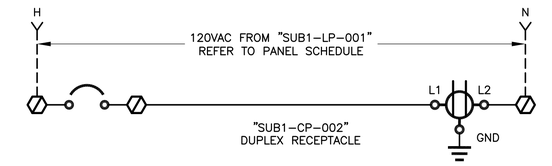

BAR LENGTH ON ORIGINAL DRAWING EQUALS ONE INCH, ADJUST SCALE ACCORDINGLY.

REUSE OF DOCUMENTS

This document, and the designs incorporated herein, is an instrument of professional service that has been developed, designed and prepared by Harutunian Engineering, Inc., and is not to be used, in whole or in part, for any other project without giving written notice to Harutunian Engineering, Inc.

NO.	DATE:	DESCRIPTION

HARUTUNIAN ENGINEERING INCORPORATED
TEXAS FIRM REGISTRATION NUMBER F-2408
ENGINEERING AND ENVIRONMENTAL CONSULTANTS
8100 CROSS PARK DRIVE
AUSTIN, TEXAS 78754

STATE OF TEXAS
SHANT HARUTUNIAN
87735
REGISTERED
PROFESSIONAL ENGINEER
10/7/2019

DESIGNED BY:	HEI
CHECKED BY:	HEI
APPROVED BY:	HEI
SUBMITTAL DATE:	OCTOBER 2019
SCALE:	AS SHOWN

SOUTH AUSTIN REGIONAL WASTEWATER TREATMENT PLANT
ELECTRICAL SUBSTATION NO. 1 REPLACEMENT PROJECT
CIP I.D.# 3333.032

SUBSTATION NO. 1
SUBSTATION MANAGEMENT CONTROL PANEL "SUB1-CP-002" WIRING SCHEMATICS

PROJECT NO: 2014-300 | SHT. 661 OF 866 | DWG NO. SUB1-E-060

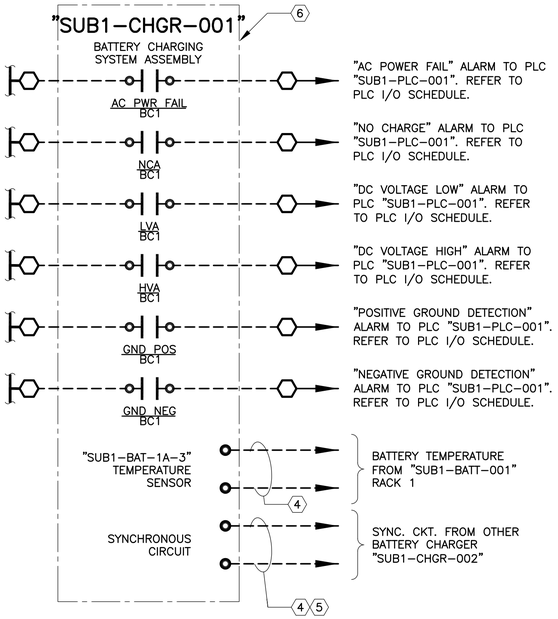

BATTERY CHARGE "SUB1-CHGR-001" CONTROL WIRING SCHEMATIC

SCALE: N.T.S.

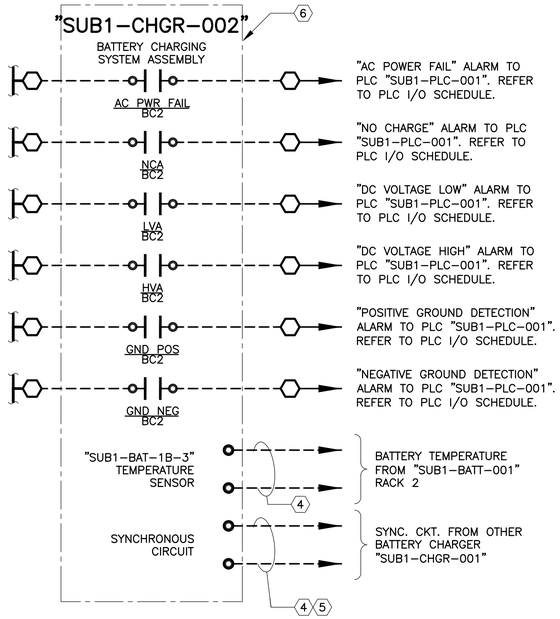

BATTERY CHARGE "SUB1-CHGR-002" CONTROL WIRING SCHEMATIC

SCALE: N.T.S.

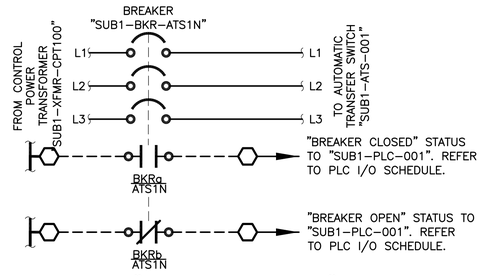

BREAKER "SUB1-BKR-ATS1N" AUXILIARY CONTACTS CONTROL WIRING SCHEMATIC

SCALE: N.T.S.

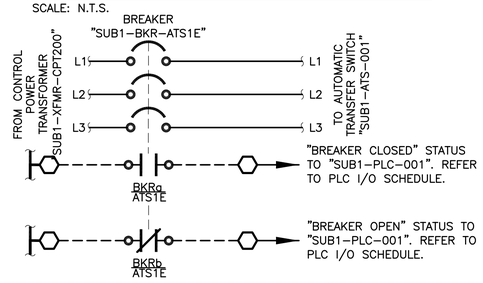

BREAKER "SUB1-BKR-ATS1E" AUXILIARY CONTACTS CONTROL WIRING SCHEMATIC

SCALE: N.T.S.

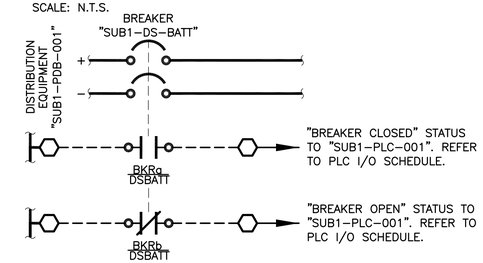

POWER DISTRIBUTION BUS "SUB1-PDB-001" AUXILIARY CONTACTS CONTROL WIRING SCHEMATIC

SCALE: N.T.S.

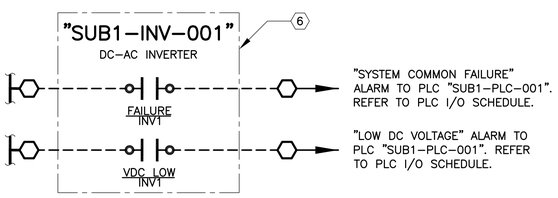

INVERTER "SUB1-INV-001" CONTROL WIRING SCHEMATIC

SCALE: N.T.S.

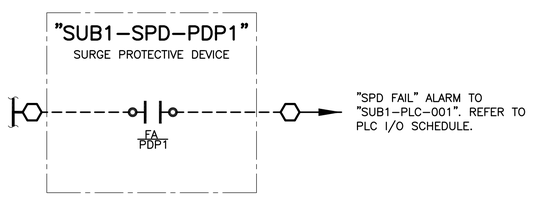

SPD "SUB1-SPD-PDP1" CONTROL WIRING SCHEMATIC

SCALE: N.T.S.

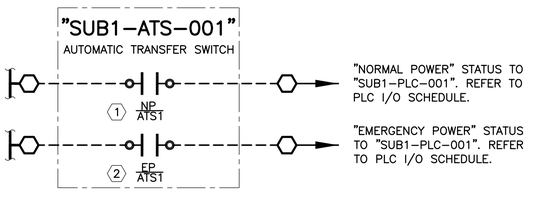

AUTOMATIC TRANSFER SWITCH "SUB1-ATS-001" CONTROL WIRING SCHEMATIC

SCALE: N.T.S.

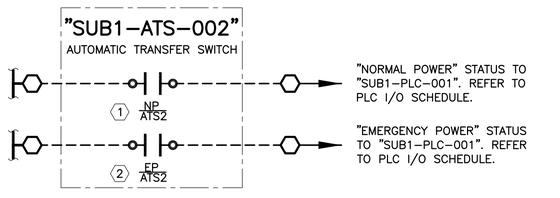

AUTOMATIC TRANSFER SWITCH "SUB1-ATS-002" CONTROL WIRING SCHEMATIC

SCALE: N.T.S.

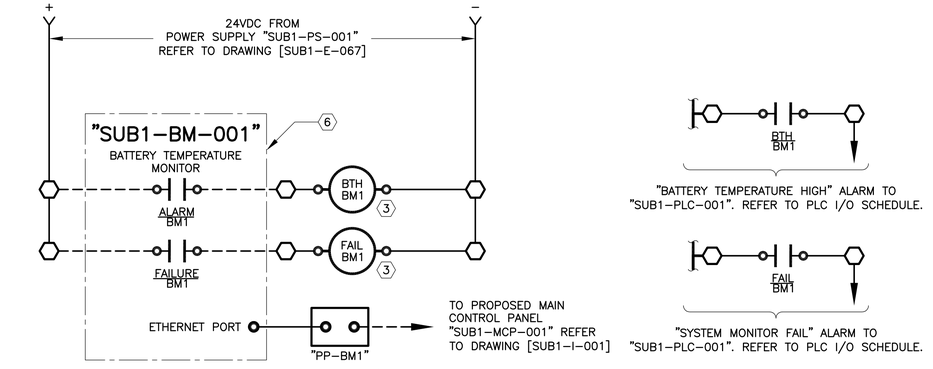

BATTERY TEMPERATURE MONITOR "SUB1-BM-001" CONTROL WIRING SCHEMATIC

SCALE: N.T.S.

CONTROL LOGIC DEVICE LEGEND:

BTH	"BATTERY TEMPERATURE HIGH" ALARM AUXILIARY RELAY
FAIL	"FAIL" ALARM AUXILIARY RELAY

KEY NOTES:

1. CONTACT CLOSED WHEN AUTOMATIC TRANSFER SWITCH IS PROVIDING POWER FROM NORMAL POWER SOURCE AND OPEN OTHERWISE.
2. CONTACT CLOSED WHEN AUTOMATIC TRANSFER SWITCH IS PROVIDING POWER FROM EMERGENCY POWER SOURCE AND OPEN OTHERWISE.
3. TYPE II CONTROL RELAY, 24VDC RATED COIL.
4. VENDOR SUPPLIED CABLE. REFER TO ELECTRICAL SPECIFICATIONS FOR ADDITIONAL INFORMATION AND REQUIREMENTS. COORDINATE CABLE LENGTH WITH PLANS.
5. SYNCHRONOUS CIRCUIT TO ACCOMMODATE SIMULTANEOUS OPERATIONS OF CHARGERS. INTERCONNECTS BETWEEN BATTERY CHARGES "SUB1-CHGR-001" AND "SUB1-CHGR-002".
6. NOT ALL WIRES CONNECTIONS SHOWN. REFER TO THE DC SYSTEM ON DRAWINGS [SUB1-E-022] AND [SUB1-E-023] AS WELL AS [SUB1-E-068] FOR ADDITIONAL INFORMATION.

BAR LENGTH ON ORIGINAL DRAWING EQUALS ONE INCH, ADJUST SCALE ACCORDINGLY.

REUSE OF DOCUMENTS

This document, and the designs incorporated herein, is an instrument of professional service that has been developed, designed and prepared by Harutunian Engineering, Inc., and is not to be used, in whole or in part, for any other project without giving written notice to Harutunian Engineering, Inc.

NO.	DATE:	DESCRIPTION

HARUTUNIAN ENGINEERING INCORPORATED

TEXAS FIRM REGISTRATION NUMBER F-2408

ENGINEERING AND ENVIRONMENTAL CONSULTANTS
8100 CROSS PARK DRIVE
AUSTIN, TEXAS 78754

STATE OF TEXAS — SHANT HARUTUNIAN 87735 — REGISTERED PROFESSIONAL ENGINEER — 10/7/2019

DESIGNED BY:	HEI
CHECKED BY:	HEI
APPROVED BY:	HEI
SUBMITTAL DATE:	OCTOBER 2019
SCALE:	AS SHOWN

SOUTH AUSTIN REGIONAL WASTEWATER TREATMENT PLANT
ELECTRICAL SUBSTATION NO. 1 REPLACEMENT PROJECT
CIP I.D.# 3333.032

SUBSTATION NO. 1
FIELD INTERFACE CONTROL POWER WIRING SCHEMATICS - PROPOSED (SHEET 1 OF 2)

PROJECT NO: 2014-300 | SHT. 662 OF 866 | DWG NO. SUB1-E-061

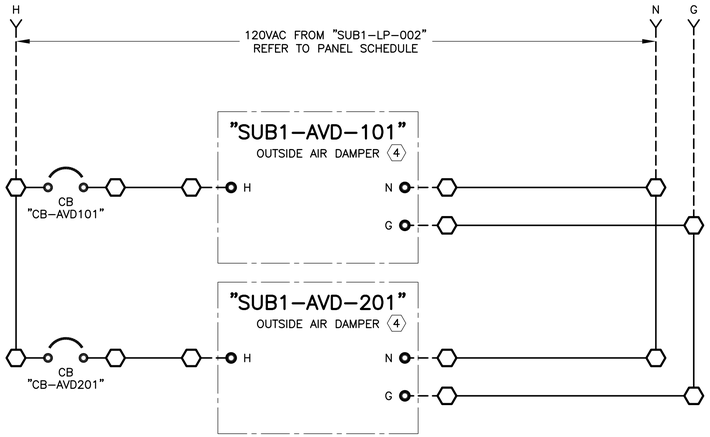

SUBSTATION HVAC CONTROL WIRING SCHEMATIC

SCALE: N.T.S.

KEY NOTES:

1. FAIL SAFE CONTACT. NORMALLY CLOSED, OPENS TO INDICATE ALARM OR POWER LOSS.
2. FURNISH AND INSTALL INTERPOSING 120V CONTROL RELAY WITH MINIMUM CONTACT RATING OF 10A CONTINUOUS, IN ORDER TO PROVIDE THE REQUIRED NUMBER OF OUTPUT CONTACTS AS SHOWN ON THE DRAWING. RELAY SHALL BE ALLEN BRADLEY BULLETIN 700-P, OR APPROVED EQUAL.
3. FURNISH AND INSTALL COPPER PATCH CORD WITH CABLE ENDS CONNECTED BY THE CABLE MANUFACTURER.
4. NOT ALL CONTROL WIRES ARE SHOWN. REFER TO DRAWING NO. [SUB1-I-004] FOR ADDITIONAL INFORMATION.

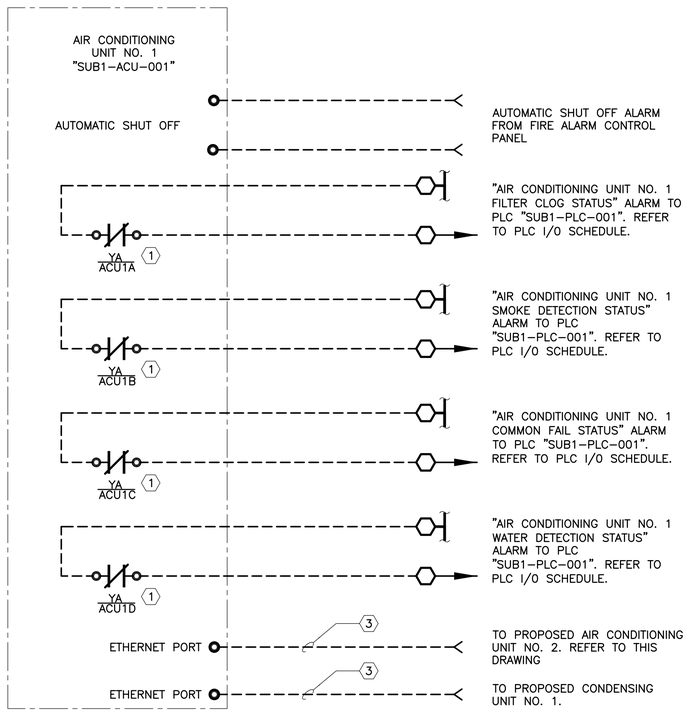

AIR CONDITIONING UNIT NO. 1 FIELD INTERFACE WIRING SCHEMATIC

SCALE: N.T.S.

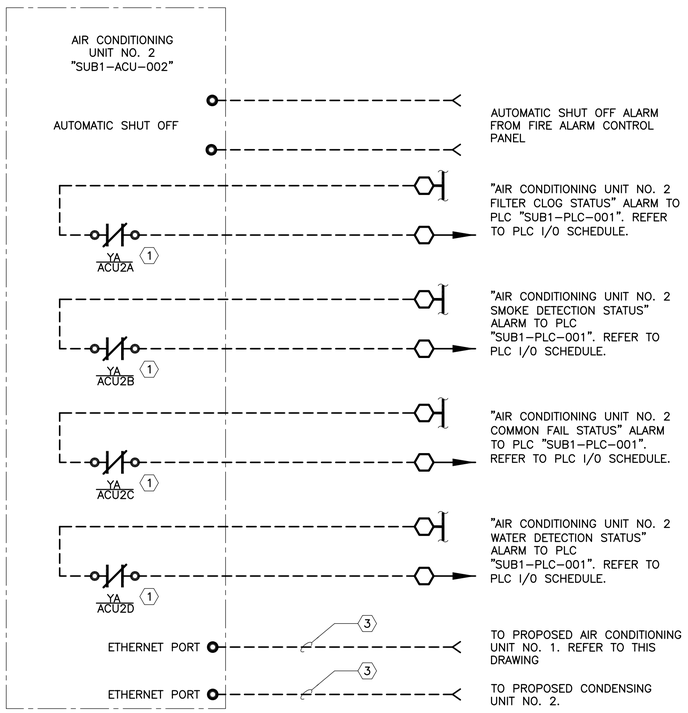

AIR CONDITIONING UNIT NO. 2 FIELD INTERFACE WIRING SCHEMATIC

SCALE: N.T.S.

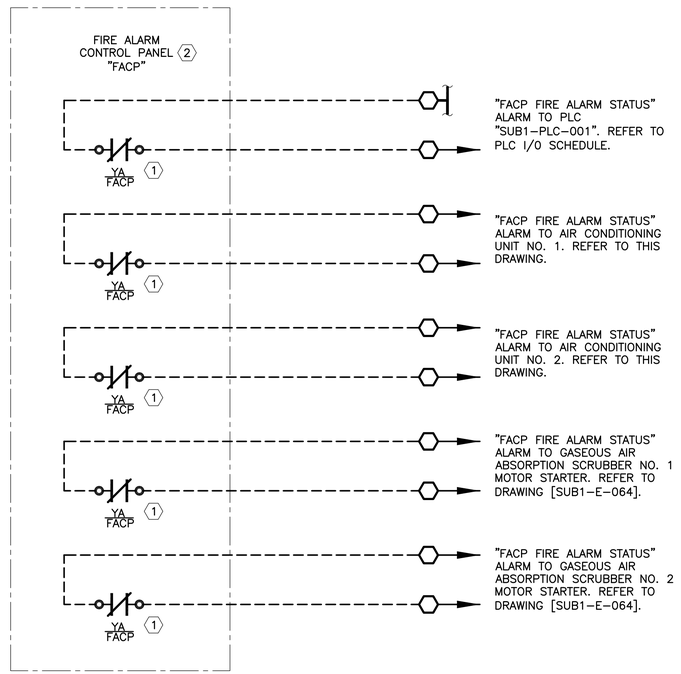

FIRE ALARM CONTROL PANEL INTERFACE WIRING SCHEMATIC

SCALE: N.T.S.

BAR LENGTH ON ORIGINAL DRAWING EQUALS ONE INCH, ADJUST SCALE ACCORDINGLY.

REUSE OF DOCUMENTS

This document, and the designs incorporated herein, is an instrument of professional service that has been developed, designed and prepared by Harutunian Engineering, Inc., and is not to be used, in whole or in part, for any other project without giving written notice to Harutunian Engineering, Inc.

NO.	DATE:	DESCRIPTION

HARUTUNIAN ENGINEERING INCORPORATED
TEXAS FIRM REGISTRATION NUMBER F-2408
ENGINEERING AND ENVIRONMENTAL CONSULTANTS
8100 CROSS PARK DRIVE
AUSTIN, TEXAS 78754

STATE OF TEXAS
SHANT HARUTUNIAN
87735
REGISTERED
PROFESSIONAL ENGINEER
10/7/2019

DESIGNED BY:	HEI
CHECKED BY:	HEI
APPROVED BY:	HEI
SUBMITTAL DATE:	OCTOBER 2019
SCALE:	AS SHOWN

SOUTH AUSTIN REGIONAL WASTEWATER TREATMENT PLANT
ELECTRICAL SUBSTATION NO. 1 REPLACEMENT PROJECT
CIP I.D.# 3333.032

SUBSTATION NO. 1
FIELD INTERFACE CONTROL POWER WIRING SCHEMATICS – PROPOSED (SHEET 2 OF 2)

PROJECT NO: 2014-300 | SHT. 663 OF 866 | DWG NO. SUB1-E-062

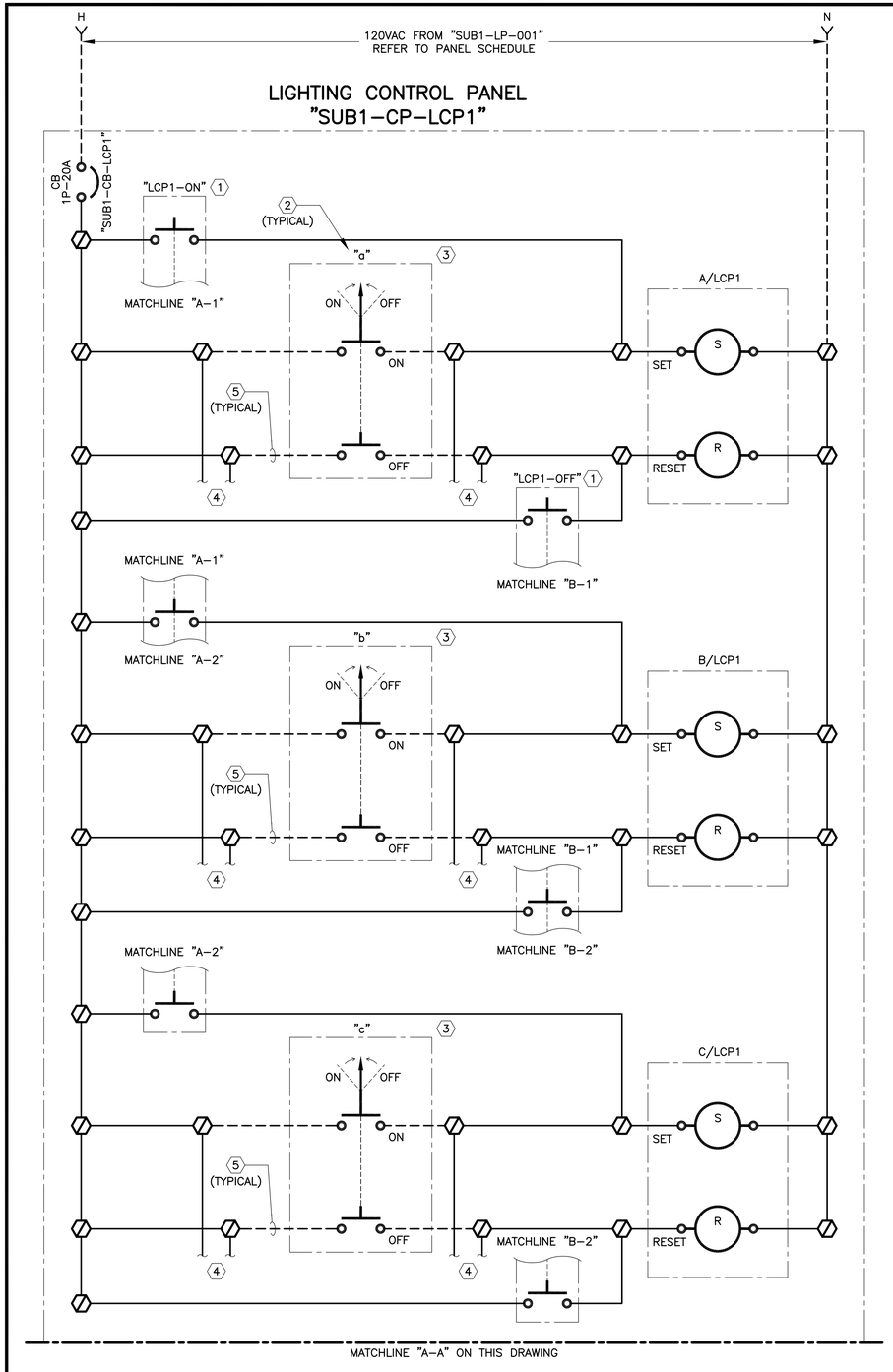

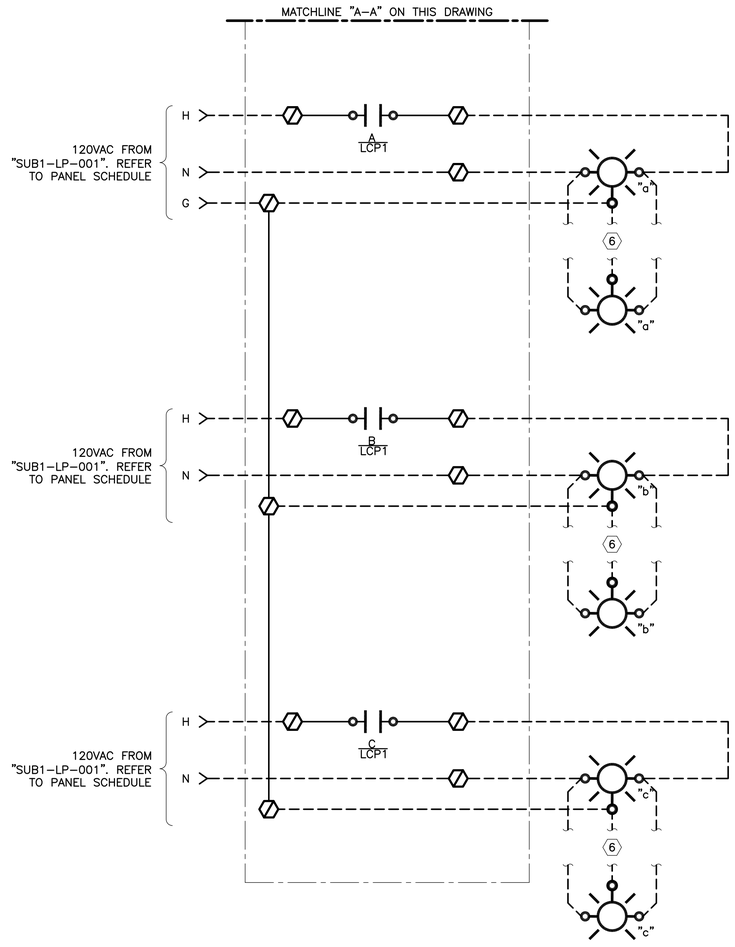

KEY NOTES:

1. PILOT DEVICE LOCATED ON FACE OF LIGHTING CONTROL PANEL "SUB1-CP-LCP1".
2. CONTROL IDENTIFIER "a", "b", ETC. INDICATES SWITCH/LIGHT FIXTURE ASSOCIATION.
3. NOT ALL LIGHT SWITCHES SHOWN. REFER TO PLANS FOR SWITCH QUANTITY AND LOCATIONS.
4. WHILE NOT SHOWN HERE, FURNISH AND INSTALL ALL NECESSARY TERMINAL BLOCKS AND CONTROL WIRE TO ACCOMMODATE QUANTITY OF SWITCHES ON LIGHTING PLANS.
5. WHILE NOT SHOWN HERE, FURNISH AND INSTALL ALL NECESSARY CONDUIT/WIRE BETWEEN LIGHT SWITCHES AND LIGHTING CONTROL PANEL "SUB1-CP-LCP1" FOR A COMPLETE AND FUNCTIONAL SYSTEM. REFER TO PLANS FOR ADDITIONAL INFORMATION.
6. REFER TO PLANS FOR QUANTITY OF LIGHT FIXTURES.

BAR LENGTH ON ORIGINAL DRAWING EQUALS ONE INCH, ADJUST SCALE ACCORDINGLY.

REUSE OF DOCUMENTS

This document, and the designs incorporated herein, is an instrument of professional service that has been developed, designed and prepared by Harutunian Engineering, Inc., and is not to be used, in whole or in part, for any other project without giving written notice to Harutunian Engineering, Inc.

NO.	DATE:	DESCRIPTION

HARUTUNIAN ENGINEERING INCORPORATED
TEXAS FIRM REGISTRATION NUMBER F-2408
ENGINEERING AND ENVIRONMENTAL CONSULTANTS
8100 CROSS PARK DRIVE
AUSTIN, TEXAS 78754

STATE OF TEXAS
SHANT HARUTUNIAN
87735
REGISTERED
PROFESSIONAL ENGINEER
10/7/2019

DESIGNED BY:	HEI
CHECKED BY:	HEI
APPROVED BY:	HEI
SUBMITTAL DATE:	OCTOBER 2019
SCALE:	AS SHOWN

SOUTH AUSTIN REGIONAL WASTEWATER TREATMENT PLANT
ELECTRICAL SUBSTATION NO. 1 REPLACEMENT PROJECT
CIP I.D.# 3333.032

SUBSTATION NO. 1
LIGHTING CONTROL PANEL
CONTROL WIRING SCHEMATIC – PROPOSED

PROJECT NO: 2014-300 | SHT. 664 OF 866 | DWG NO. SUB1-E-063

CONTROL LOGIC DEVICE LEGEND:

M	"MOTOR STARTER CONTACTOR"
49X	"MOTOR OVERLOAD" ALARM AUXILIARY RELAY

KEY NOTES:

1. THIS DRAWING IS TYPICAL FOR MULTIPLE EQUIPMENT. THE ACTUAL TAG FOR EACH EQUIPMENT WILL DIFFER FROM THAT SHOWN HERE. REFER TO THE TAG REPLACEMENT SCHEDULE ON THIS DRAWING TO DERIVE THE CORRESPONDING TAGS FOR EACH PROPOSED EQUIPMENT.
2. CONTROL DEVICE MOUNTED ON FRONT OF MOTOR STARTER.
3. CONTROL POWER TRANSFORMER SHALL HAVE MINIMUM RATING OF 200VA. TRANSFORMER SHALL BE SIZED ACCORDING TO ELECTRICAL SPECIFICATIONS.
4. CONTACT IS NORMALLY CLOSED. OPENS ON ALARM OR LOSS OF POWER.

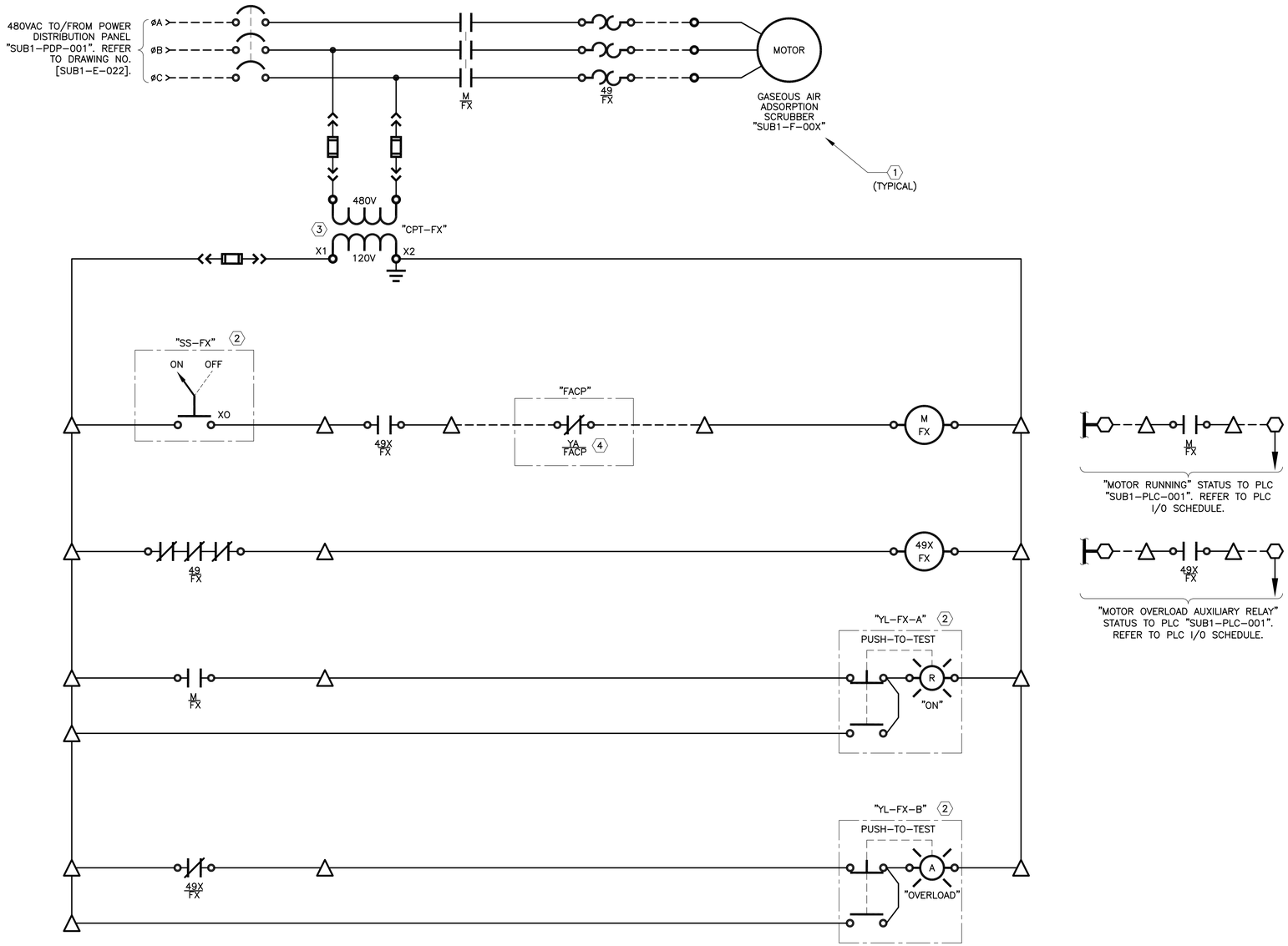

TAG REPLACEMENT TABLE 1

EQUIPMENT DESCRIPTION	FX=	00X=
GASEOUS AIR ABSORPTION SCRUBBER NO. 1	F1	001
GASEOUS AIR ABSORPTION SCRUBBER NO. 2	F2	002

BAR LENGTH ON ORIGINAL DRAWING EQUALS ONE INCH, ADJUST SCALE ACCORDINGLY.

REUSE OF DOCUMENTS

This document, and the designs incorporated herein, is an instrument of professional service that has been developed, designed and prepared by Harutunian Engineering, Inc., and is not to be used, in whole or in part, for any other project without giving written notice to Harutunian Engineering, Inc.

NO.	DATE:	DESCRIPTION

HARUTUNIAN ENGINEERING INCORPORATED
TEXAS FIRM REGISTRATION NUMBER F-2408
ENGINEERING AND ENVIRONMENTAL CONSULTANTS
8100 CROSS PARK DRIVE
AUSTIN, TEXAS 78754

STATE OF TEXAS
SHANT HARUTUNIAN
87735
REGISTERED
PROFESSIONAL ENGINEER
10/7/2019

DESIGNED BY:	HEI
CHECKED BY:	HEI
APPROVED BY:	HEI
SUBMITTAL DATE:	OCTOBER 2019
SCALE:	AS SHOWN

SOUTH AUSTIN REGIONAL WASTEWATER TREATMENT PLANT
ELECTRICAL SUBSTATION NO. 1 REPLACEMENT PROJECT
CIP I.D.# 3333.032

SUBSTATION NO. 1
TYPICAL GASEOUS AIR ABSORPTION SCRUBBER CONTROL WIRING SCHEMATIC – PROPOSED

PROJECT NO: 2014-300 | SHT. 665 OF 866 | DWG NO. SUB1-E-064

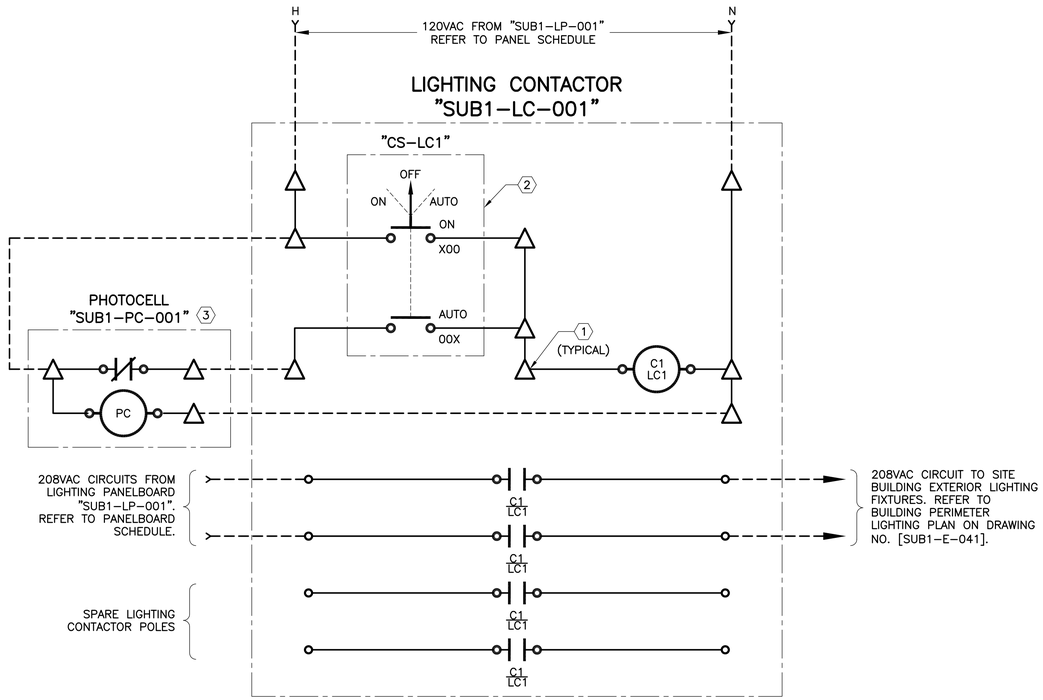

LIGHTING CONTACTOR "SUB1-LC-001" CONTROL WIRING SCHEMATIC

SCALE: N.T.S.

KEY NOTES:

1. TERMINAL BLOCK FURNISHED AND INSTALLED BY LIGHTING CONTACTOR MANUFACTURER.
2. CONTRACTOR SHALL FURNISH AND INSTALL CONTROL STATION "CS-LC1". CONTRACTOR SHALL FLUSH MOUNT THE ENTIRE CONTROL STATION ASSEMBLY ON THE FRONT OF THE ENCLOSURE HOUSING OF LIGHTING CONTACTOR. CONTRACTOR SHALL FURNISH AND INSTALL ALL NECESSARY MOUNTING HARDWARE TO INSURE SECURE INSTALLATION. CONTROL STATION SHALL BE FURNISHED WITH NAMEPLATE INSCRIBED "EXTERIOR LIGHTING CONTROL". NAMEPLATE TO BE SECURED TO CONTROL STATION PER SPECIFICATIONS. THE "ON/OFF/AUTO" SELECTOR SWITCH NAMEPLATE PROVIDED BY THE SELECTOR SWITCH MANUFACTURER SHALL ALSO BE DISPLAYED ON THE FACE OF THE PROPOSED CONTROL STATION.
3. REFER TO LIGHTING PLAN ON DRAWING NO. [SUB1-E-041] FOR LOCATION OF PROPOSED PHOTOCELL. EXTEND CONDUIT/WIRE AS NECESSARY TO/FROM LIGHTING CONTACTOR AND MAKE ALL FINAL CONNECTIONS/TERMINATIONS. VERIFY PHOTOCELL/ CONTACTOR OPERATION MEETS OWNER'S EXPECTATION FOR ROADWAY/PARKING LIGHTING FIXTURE SWITCHING.

BAR LENGTH ON ORIGINAL DRAWING EQUALS ONE INCH, ADJUST SCALE ACCORDINGLY.

REUSE OF DOCUMENTS

This document, and the designs incorporated herein, is an instrument of professional service that has been developed, designed and prepared by Harutunian Engineering, Inc., and is not to be used, in whole or in part, for any other project without giving written notice to Harutunian Engineering, Inc.

NO.	DATE:	DESCRIPTION

HARUTUNIAN ENGINEERING INCORPORATED
TEXAS FIRM REGISTRATION NUMBER F-2408
ENGINEERING AND ENVIRONMENTAL CONSULTANTS
8100 CROSS PARK DRIVE
AUSTIN, TEXAS 78754

STATE OF TEXAS
SHANT HARUTUNIAN
87735
REGISTERED
PROFESSIONAL ENGINEER
10/7/2019

DESIGNED BY:	HEI
CHECKED BY:	HEI
APPROVED BY:	HEI
SUBMITTAL DATE:	OCTOBER 2019
SCALE:	AS SHOWN

SOUTH AUSTIN REGIONAL WASTEWATER TREATMENT PLANT
ELECTRICAL SUBSTATION NO. 1 REPLACEMENT PROJECT
CIP I.D.# 3333.032

SUBSTATION NO. 1
LIGHTING CONTACTOR
CONTROL WIRING SCHEMATIC – PROPOSED

PROJECT NO: 2014-300 | SHT. 666 OF 866 | DWG NO. SUB1-E-065

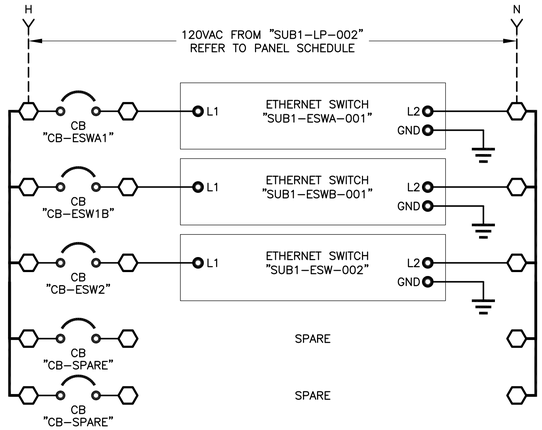

COMMUNICATION EQUIPMENT POWER WIRING SCHEMATIC

SCALE: N.T.S.

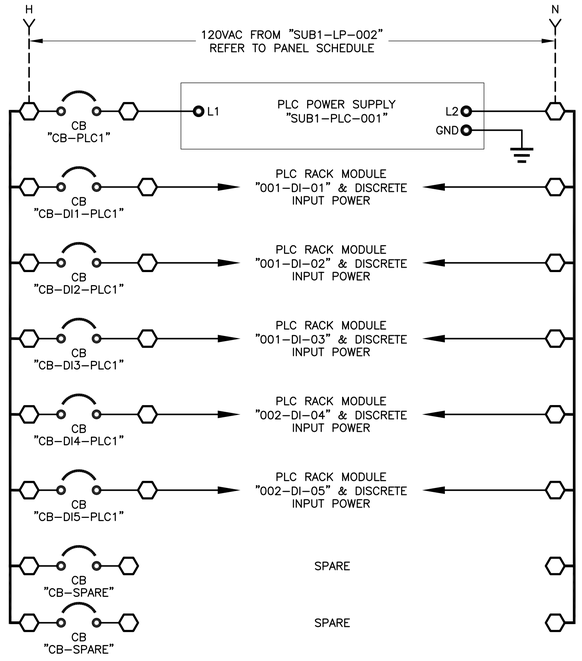

PLC "SUB1-PLC-001" POWER WIRING SCHEMATIC

SCALE: N.T.S.

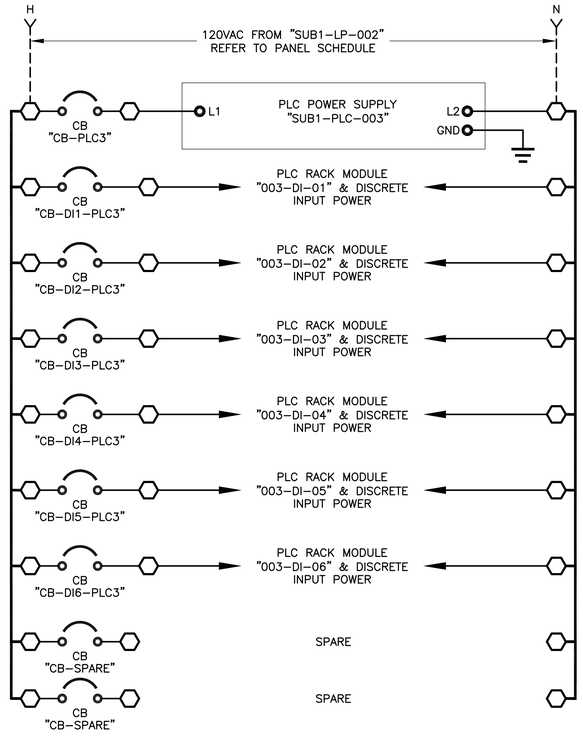

PLC "SUB1-PLC-003" POWER WIRING SCHEMATIC

SCALE: N.T.S.

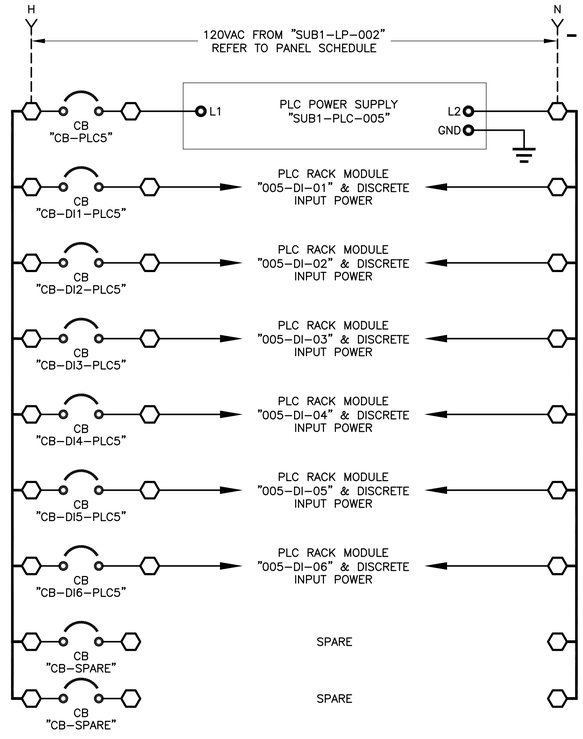

PLC "SUB1-PLC-005" POWER WIRING SCHEMATIC

SCALE: N.T.S.

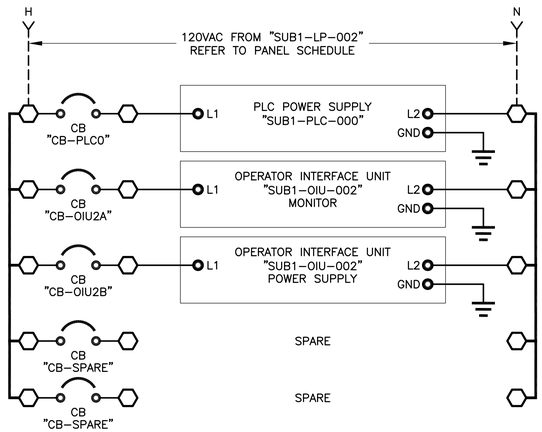

"SUB1-PLC-000" AND "SUB1-OIU-001" POWER WIRING SCHEMATIC

SCALE: N.T.S.

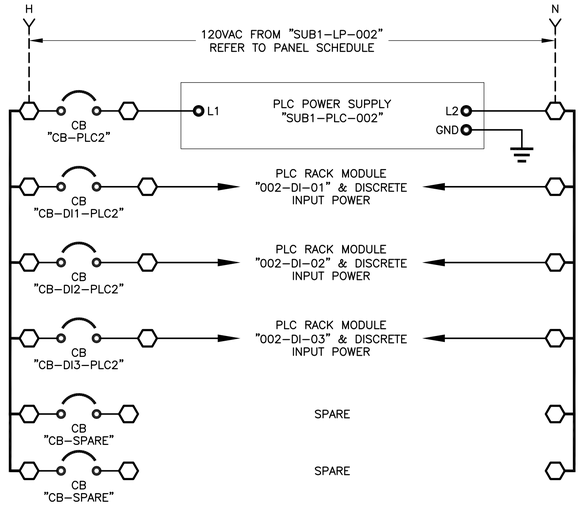

PLC "SUB1-PLC-002" POWER WIRING SCHEMATIC

SCALE: N.T.S.

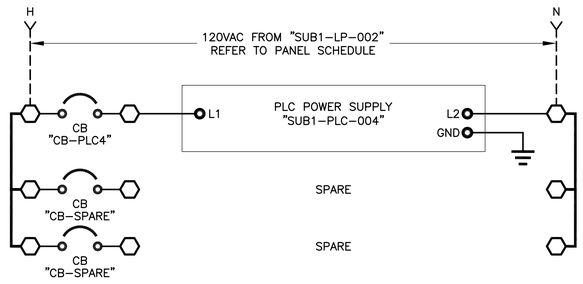

PLC "SUB1-PLC-004" POWER WIRING SCHEMATIC

SCALE: N.T.S.

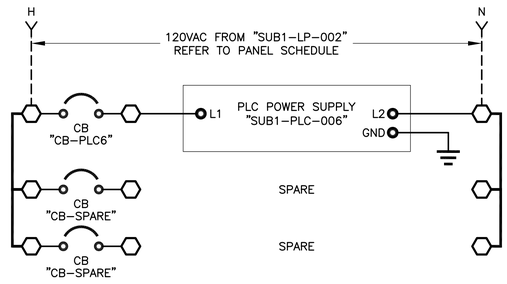

PLC "SUB1-PLC-006" POWER WIRING SCHEMATIC

SCALE: N.T.S.

BAR LENGTH ON ORIGINAL DRAWING EQUALS ONE INCH, ADJUST SCALE ACCORDINGLY.

REUSE OF DOCUMENTS

This document, and the designs incorporated herein, is an instrument of professional service that has been developed, designed and prepared by Harutunian Engineering, Inc., and is not to be used, in whole or in part, for any other project without giving written notice to Harutunian Engineering, Inc.

NO.	DATE:	DESCRIPTION

HARUTUNIAN ENGINEERING INCORPORATED

TEXAS FIRM REGISTRATION NUMBER F-2408

ENGINEERING AND ENVIRONMENTAL CONSULTANTS
8100 CROSS PARK DRIVE
AUSTIN, TEXAS 78754

STATE OF TEXAS
SHANT HARUTUNIAN
87735
REGISTERED
PROFESSIONAL ENGINEER
10/7/2019

DESIGNED BY:	HEI
CHECKED BY:	HEI
APPROVED BY:	HEI
SUBMITTAL DATE:	OCTOBER 2019
SCALE:	AS SHOWN

SOUTH AUSTIN REGIONAL WASTEWATER TREATMENT PLANT
ELECTRICAL SUBSTATION NO. 1 REPLACEMENT PROJECT
CIP I.D.# 3333.032

SUBSTATION NO. 1 POWER WIRING SCHEMATICS - PROPOSED (SHEET 1 OF 2)

PROJECT NO: 2014-300 | SHT. 667 OF 866 | DWG NO. SUB1-E-066

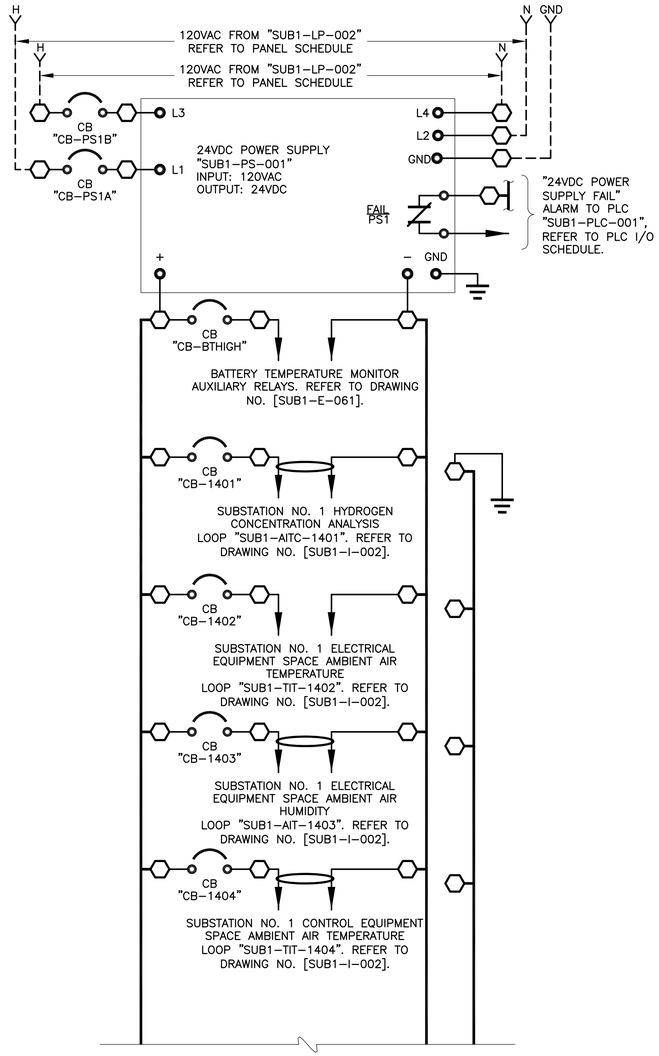

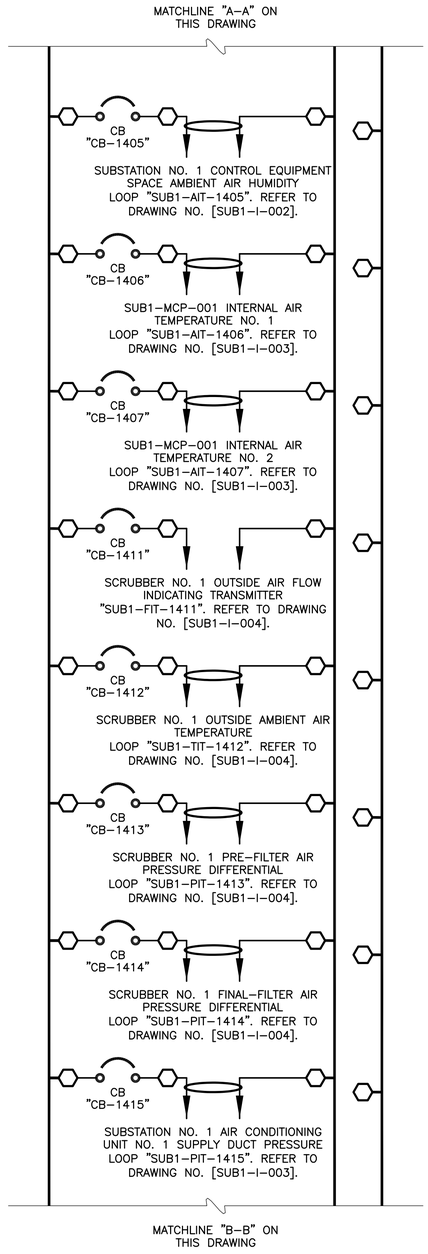

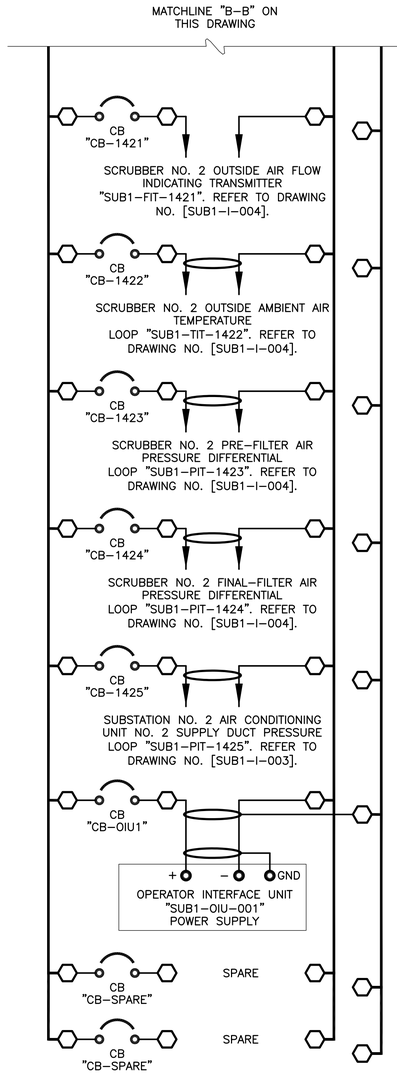

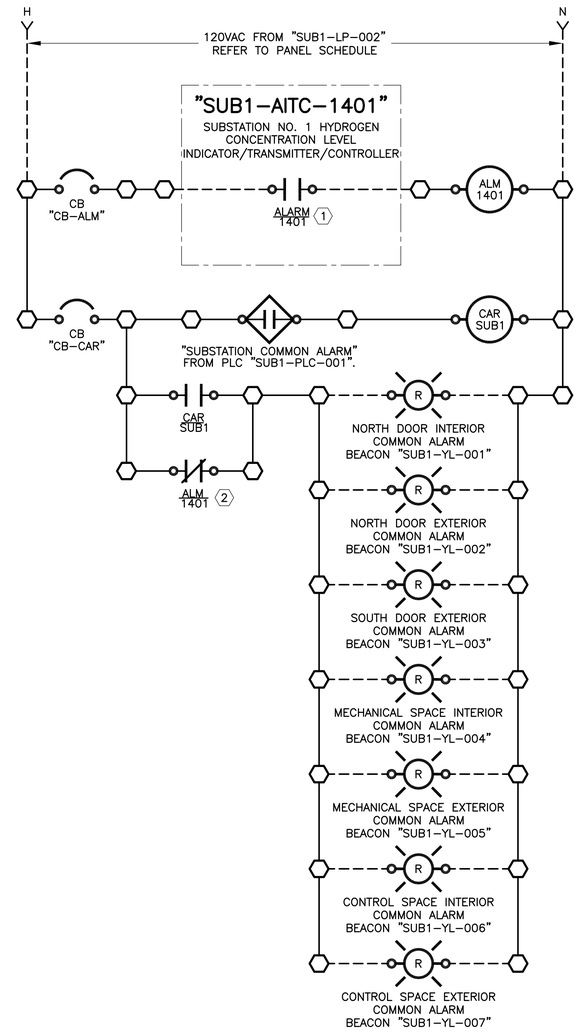

CONTROL LOGIC DEVICE LEGEND:

ALM	"SUBSTATION NO. 1 HYDROGEN CONCENTRATION LEVEL" ALARM AUXILIARY RELAY
CAR	"SUBSTATION COMMON ALARM" AUXILIARY RELAY

KEY NOTES:

(1) FAIL SAFE CONTACT. NORMALLY CLOSED, OPENS TO INDICATE ALARM OR POWER LOSS.

(2) FAIL SAFE CONTACT. NORMALLY OPEN, CLOSES TO INDICATE ALARM OR POWER LOSS.

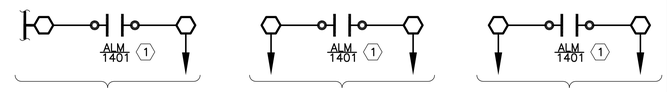

24VDC INSTRUMENTATION POWER WIRING SCHEMATIC

SCALE: N.T.S.

SUBSTATION ALARM CONTROL WIRING SCHEMATIC

SCALE: N.T.S.

BAR LENGTH ON ORIGINAL DRAWING EQUALS ONE INCH, ADJUST SCALE ACCORDINGLY.

REUSE OF DOCUMENTS

This document, and the designs incorporated herein, is an instrument of professional service that has been developed, designed and prepared by Harutunian Engineering, Inc., and is not to be used, in whole or in part, for any other project without giving written notice to Harutunian Engineering, Inc.

NO.	DATE:	DESCRIPTION

HARUTUNIAN ENGINEERING INCORPORATED

TEXAS FIRM REGISTRATION NUMBER F-2408

ENGINEERING AND ENVIRONMENTAL CONSULTANTS
8100 CROSS PARK DRIVE
AUSTIN, TEXAS 78754

STATE OF TEXAS
SHANT HARUTUNIAN
87735
REGISTERED
PROFESSIONAL ENGINEER
10/7/2019

DESIGNED BY:	HEI
CHECKED BY:	HEI
APPROVED BY:	HEI
SUBMITTAL DATE:	OCTOBER 2019
SCALE:	AS SHOWN

SOUTH AUSTIN REGIONAL WASTEWATER TREATMENT PLANT
ELECTRICAL SUBSTATION NO. 1 REPLACEMENT PROJECT
CIP I.D.# 3333.032

SUBSTATION NO. 1 POWER WIRING SCHEMATICS - PROPOSED (SHEET 2 OF 2)

PROJECT NO: 2014-300 | SHT. 668 OF 866 | DWG NO. SUB1-E-067

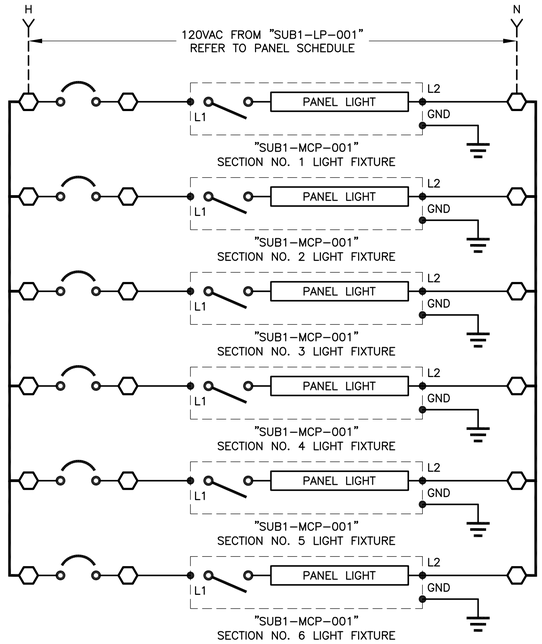

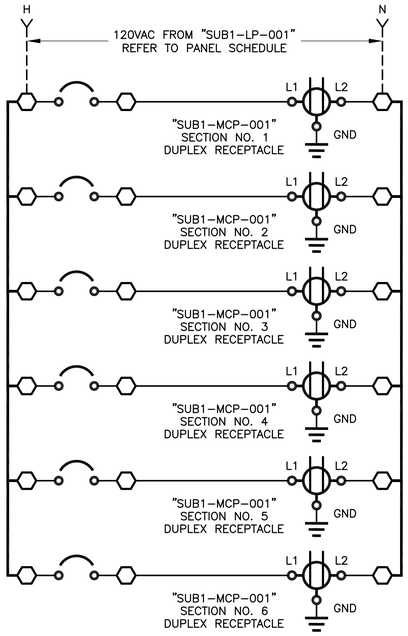

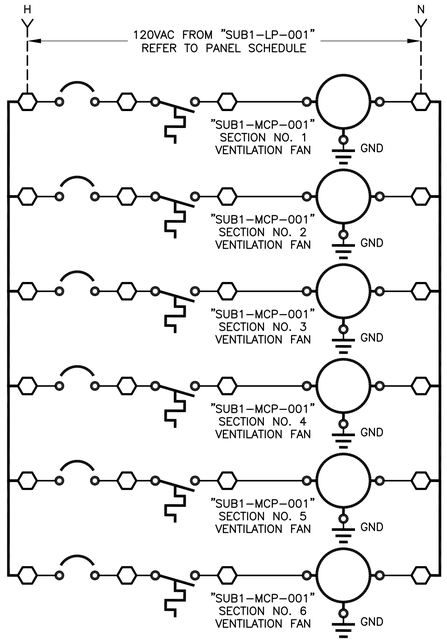

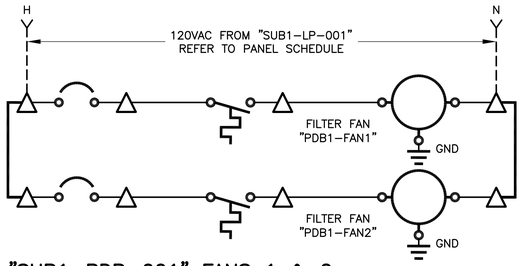

"SUB1-PDB-001" FANS 1 & 2
POWER SCHEMATIC
SCALE: N.T.S.

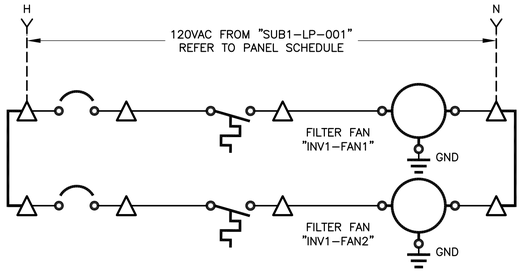

"SUB1-INV-001" FANS 1 & 2
POWER SCHEMATIC
SCALE: N.T.S.

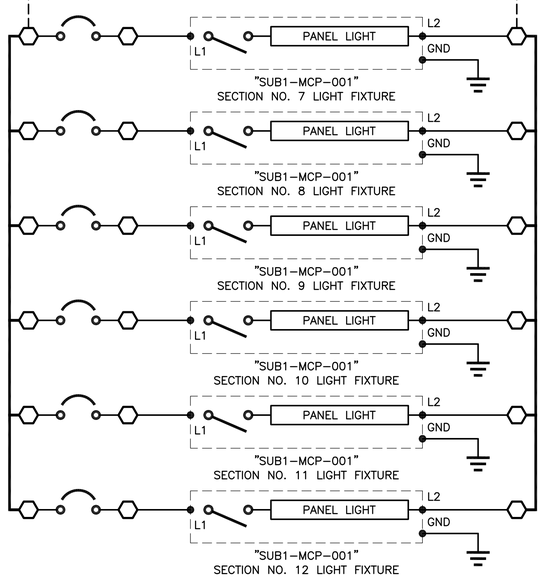

CONTROL PANEL "SUB1-MCP-001" LIGHTING
POWER WIRING SCHEMATICS
SCALE: N.T.S.

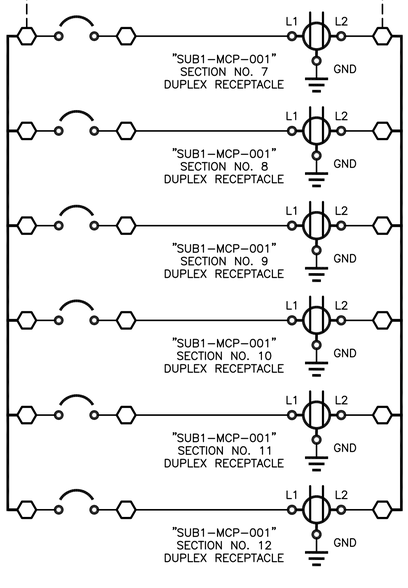

CONTROL PANEL "SUB1-MCP-001"
RECEPTACLE
POWER WIRING SCHEMATICS
SCALE: N.T.S.

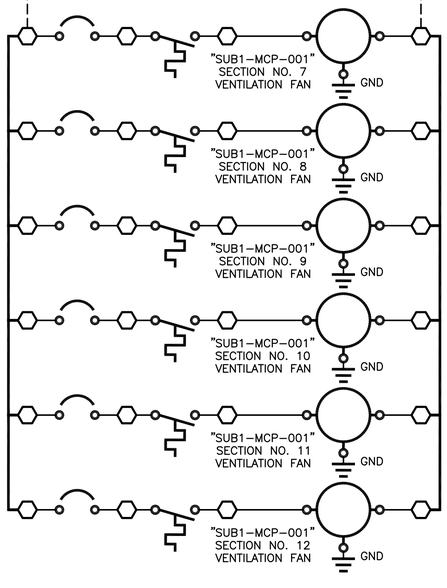

CONTROL PANEL "SUB1-MCP-001"
VENTILATION FAN
POWER WIRING SCHEMATICS
SCALE: N.T.S.

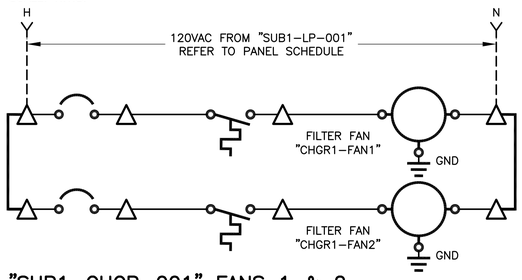

"SUB1-CHGR-001" FANS 1 & 2
POWER SCHEMATIC
SCALE: N.T.S.

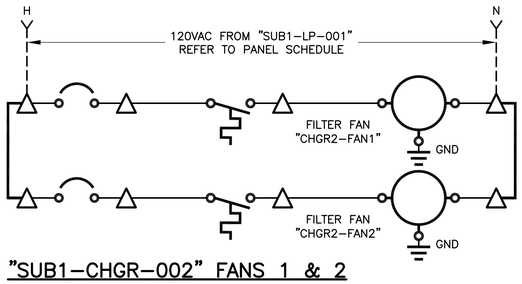

"SUB1-CHGR-002" FANS 1 & 2
POWER SCHEMATIC
SCALE: N.T.S.

BAR LENGTH ON ORIGINAL DRAWING EQUALS ONE INCH, ADJUST SCALE ACCORDINGLY.

REUSE OF DOCUMENTS

This document, and the designs incorporated herein, is an instrument of professional service that has been developed, designed and prepared by Harutunian Engineering, Inc., and is not to be used, in whole or in part, for any other project without giving written notice to Harutunian Engineering, Inc.

NO.	DATE:	DESCRIPTION

HARUTUNIAN ENGINEERING INCORPORATED
TEXAS FIRM REGISTRATION NUMBER F-2408
ENGINEERING AND ENVIRONMENTAL CONSULTANTS
8100 CROSS PARK DRIVE
AUSTIN, TEXAS 78754

STATE OF TEXAS
SHANT HARUTUNIAN
87735
REGISTERED
PROFESSIONAL ENGINEER
10/7/2019

DESIGNED BY:	HEI
CHECKED BY:	HEI
APPROVED BY:	HEI
SUBMITTAL DATE:	OCTOBER 2019
SCALE:	AS SHOWN

SOUTH AUSTIN REGIONAL WASTEWATER TREATMENT PLANT
ELECTRICAL SUBSTATION NO. 1 REPLACEMENT PROJECT
CIP I.D.# 3333.032

SUBSTATION NO. 1
MISCELLANEOUS AUXILIARY
WIRING SCHEMATICS – PROPOSED

PROJECT NO: 2014-300 | SHT. 669 OF 866 | DWG NO. SUB1-E-068

130VDC POWER DISTRIBUTION PANEL
"SUB1–PDP–DC01"

+ –

MAIN CB
225–800A
(SET@600A)

PDPDC1–1,3,5	3/4" – 6#10(P), 3#10(G)	"VCB–103" CONTROL POWER (975VA)	CKT–1	2P–20A	CKT–2	2P–20A	"VCB–203" CONTROL POWER (975VA)	3/4" – 6#10(P), 3#10(G)	PDPDC1–2,4,6
	INCLUDED IN CONDUIT WITH CIRCUIT NO. 1	"VCB–105" CONTROL POWER (995VA)	CKT–3	2P–20A	CKT–4	2P–20A	"VCB–205" CONTROL POWER (995VA)	INCLUDED IN CONDUIT WITH CIRCUIT NO. 2	
	INCLUDED IN CONDUIT WITH CIRCUIT NO. 1	"VCB–106" CONTROL POWER (1055VA)	CKT–5	2P–20A	CKT–6	2P–20A	"VCB–206" CONTROL POWER (1055VA)	INCLUDED IN CONDUIT WITH CIRCUIT NO. 2	
PDPDC1–7,9,11	3/4" – 6#10(P), 3#10(G)	"VCB–107" CONTROL POWER (975VA)	CKT–7	2P–20A	CKT–8	2P–20A	"VCB–207" CONTROL POWER (975VA)	3/4" – 6#10(P), 3#10(G)	PDPDC1–8,10,12
	INCLUDED IN CONDUIT WITH CIRCUIT NO. 7	"VCB–108" CONTROL POWER (975VA)	CKT–9	2P–20A	CKT–10	2P–20A	"VCB–208" CONTROL POWER (975VA)	INCLUDED IN CONDUIT WITH CIRCUIT NO. 8	
	INCLUDED IN CONDUIT WITH CIRCUIT NO. 7	"VCB–109" CONTROL POWER (975VA)	CKT–11	2P–20A	CKT–12	2P–20A	"VCB–209" CONTROL POWER (975VA)	INCLUDED IN CONDUIT WITH CIRCUIT NO. 8	
PDPDC1–13,15,17	3/4" – 6#10(P), 3#10(G)	"VCB–110" CONTROL POWER (975VA)	CKT–13	2P–20A	CKT–14	2P–20A	"VCB–210" CONTROL POWER (975VA)	3/4" – 6#10(P), 3#10(G)	PDPDC1–14,16,18
	INCLUDED IN CONDUIT WITH CIRCUIT NO. 13	"VCB–111" CONTROL POWER (975VA)	CKT–15	2P–20A	CKT–16	2P–20A	"VCB–211" CONTROL POWER (975VA)	INCLUDED IN CONDUIT WITH CIRCUIT NO. 14	
	INCLUDED IN CONDUIT WITH CIRCUIT NO. 13	"VCB–112" CONTROL POWER (975VA)	CKT–17	2P–20A	CKT–18	2P–20A	"VCB–212" CONTROL POWER (975VA)	INCLUDED IN CONDUIT WITH CIRCUIT NO. 14	
PDPDC1–19,21,23	3/4" – 6#10(P), 3#10(G)	"VCB–113" CONTROL POWER (975VA)	CKT–19	2P–20A	CKT–20	2P–20A	"VCB–213" CONTROL POWER (975VA)	3/4" – 6#10(P), 3#10(G)	PDPDC1–20,22,24
	INCLUDED IN CONDUIT WITH CIRCUIT NO. 19	"VCB–114" CONTROL POWER (975VA)	CKT–21	2P–20A	CKT–22	2P–20A	"VCB–214" CONTROL POWER (975VA)	INCLUDED IN CONDUIT WITH CIRCUIT NO. 20	
	INCLUDED IN CONDUIT WITH CIRCUIT NO. 19	"VCB–115" CONTROL POWER (975VA)	CKT–23	2P–20A	CKT–24	2P–20A	"VCB–215" CONTROL POWER (975VA)	INCLUDED IN CONDUIT WITH CIRCUIT NO. 20	

MATCHLINE "A–A" REFER TO DRAWING NO. [SUB1–E–070]

BAR LENGTH ON ORIGINAL DRAWING EQUALS ONE INCH, ADJUST SCALE ACCORDINGLY.

REUSE OF DOCUMENTS

This document, and the designs incorporated herein, is an instrument of professional service that has been developed, designed and prepared by Harutunian Engineering, Inc., and is not to be used, in whole or in part, for any other project without giving written notice to Harutunian Engineering, Inc.

NO.	DATE:	DESCRIPTION

HARUTUNIAN ENGINEERING INCORPORATED
TEXAS FIRM REGISTRATION NUMBER F–2408
ENGINEERING AND ENVIRONMENTAL CONSULTANTS
8100 CROSS PARK DRIVE
AUSTIN, TEXAS 78754

STATE OF TEXAS
SHANT HARUTUNIAN
87735
REGISTERED
PROFESSIONAL ENGINEER
10/7/2019

DESIGNED BY:	HEI
CHECKED BY:	HEI
APPROVED BY:	HEI
SUBMITTAL DATE:	OCTOBER 2019
SCALE:	AS SHOWN

SOUTH AUSTIN REGIONAL WASTEWATER TREATMENT PLANT
ELECTRICAL SUBSTATION NO. 1 REPLACEMENT PROJECT
CIP I.D.# 3333.032

SUBSTATION NO. 1 PANEL SCHEDULE PROPOSED (SHEET 1 OF 4)

PROJECT NO: 2014–300 | SHT. 670 OF 866 | DWG NO. SUB1–E–069

MATCHLINE "A–A" REFER TO DRAWING NO. [SUB1–E–069]

PDPDC1–25,27	3/4" – 4#10(P), 2#10(G)	"VCB–116" CONTROL POWER (975VA)	CKT–25 2P–20A	CKT–26 2P–20A	"VCB–216" CONTROL POWER (975VA)	3/4" – 4#10(P), 2#10(G)	PDPDC1–26,28
	INCLUDED IN CONDUIT WITH CIRCUIT NO. 25	"VCB–117" CONTROL POWER (975VA)	CKT–27 2P–20A	CKT–28 2P–20A	"VCB–217" CONTROL POWER (975VA)	INCLUDED IN CONDUIT WITH CIRCUIT NO. 28	
PDPDC1–29,31	3/4" – 4#10(P), 2#10(G)	BREAKER TEST AREA RECEPTACLE (180VA)	CKT–29 2P–20A	CKT–30 2P–20A	"SUB1–BM–001" CONTROL POWER (180VA)	3/4" – 2#10(P), 1#10(G), 1#10(IG)	PDPDC1–30
	INCLUDED IN CONDUIT WITH CIRCUIT NO. 29	BREAKER TEST CONTROL PANEL "SUB1–CP–002" (400VA)	CKT–31 2P–20A	CKT–32 2P–150A	"SUB1–INV–001" DC POWER (10kVA)	2" – 3#2/0(P), 1#4(G), 1#2/0(IG)	PDPDC1–32
PDPDC1–33	3/4" – 2#10(P), 1#10(G)	SUBSTATION MANAGEMENT RELAY CONTROL PANEL "SUB1–CP–002" (45VA)	CKT–33 2P–20A	CKT–34 2P–20A	SPARE		
		SPARE	CKT–35 2P–20A	CKT–36 2P–20A	SPARE		
		SPARE	CKT–37 2P–20A	CKT–38 2P–20A	SPARE		
		SPARE	CKT–39 2P–20A	CKT–40 2P–20A	SPARE		

BAR LENGTH ON ORIGINAL DRAWING EQUALS ONE INCH, ADJUST SCALE ACCORDINGLY.

REUSE OF DOCUMENTS

This document, and the designs incorporated herein, is an instrument of professional service that has been developed, designed and prepared by Harutunian Engineering, Inc., and is not to be used, in whole or in part, for any other project without giving written notice to Harutunian Engineering, Inc.

NO.	DATE:	DESCRIPTION

HARUTUNIAN ENGINEERING INCORPORATED

TEXAS FIRM REGISTRATION NUMBER F–2408

ENGINEERING AND ENVIRONMENTAL CONSULTANTS
8100 CROSS PARK DRIVE
AUSTIN, TEXAS 78754

STATE OF TEXAS
SHANT HARUTUNIAN
87735
REGISTERED
PROFESSIONAL ENGINEER
10/7/2019

DESIGNED BY:	HEI
CHECKED BY:	HEI
APPROVED BY:	HEI
SUBMITTAL DATE:	OCTOBER 2019
SCALE:	AS SHOWN

SOUTH AUSTIN REGIONAL WASTEWATER TREATMENT PLANT
ELECTRICAL SUBSTATION NO. 1 REPLACEMENT PROJECT
CIP I.D.# 3333.032

SUBSTATION NO. 1 PANEL SCHEDULE PROPOSED (SHEET 2 OF 4)

PROJECT NO: 2014–300 | SHT. 671 OF 866 | DWG NO. SUB1–E–070

PANELBOARD "SUB1-LP-001"
120/208V, 225A BUS, 3ø, 4W

A B C N

MAIN CB
3P-150A

	3/4" – 6#10(P), 3#10(G)	MAIN CONTROL PANEL "SUB1-MCP-001" LIGHTS SECTIONS 1-6 (252VA)	1P-20A	CKT-1	CKT-2	1P-20A	EXIT LIGHTS (144VA)	3/4" – 2#10(P), 1#10(G)	LP1-2
LP1-1,3,5	INCLUDED IN CONDUIT WITH CIRCUIT NO. 1	MAIN CONTROL PANEL "SUB1-MCP-001" VENT FANS SECTIONS 1-6 (162VA)	1P-20A	CKT-3	CKT-4	1P-20A	BATTERY CHARGING SYSTEM ASSEMBLY "SUB1-CHGR-001" FANS (54VA)	3/4" – 6#10(P), 3#10(G)	LP1-4,6,8
	INCLUDED IN CONDUIT WITH CIRCUIT NO. 1	MAIN CONTROL PANEL "SUB1-MCP-001" AUXILIARY POWER SECTIONS 1-6 (240VA)	1P-20A	CKT-5	CKT-6	1P-20A	BATTERY CHARGING SYSTEM ASSEMBLY "SUB1-CHGR-002" FANS (54VA)	INCLUDED IN CONDUIT WITH CIRCUIT NO. 4	
	3/4" – 6#10(P), 3#10(G)	MAIN CONTROL PANEL "SUB1-MCP-001" LIGHTS SECTIONS 7-12 (252VA)	1P-20A	CKT-7	CKT-8	1P-20A	MAIN DC POWER DISTRIBUTION BUS "SUB1-PDB-001" FANS (54VA)	INCLUDED IN CONDUIT WITH CIRCUIT NO. 4	
LP1-7,9,11	INCLUDED IN CONDUIT WITH CIRCUIT NO. 7	MAIN CONTROL PANEL "SUB1-MCP-001" VENT FANS SECTIONS 7-12 (162VA)	2P-20A	CKT-9	CKT-10	1P-20A	DC-AC INVERSION SYSTEM ASSEMBLY "SUB1-INV-001" FANS (54VA)	3/4" – 2#10(P), 1#10(G)	LP1-10
	INCLUDED IN CONDUIT WITH CIRCUIT NO. 7	MAIN CONTROL PANEL "SUB1-MCP-001" AUXILIARY POWER SECTIONS 7-12 (240VA)	1P-20A	CKT-11	CKT-12	1P-20A	CABLE CLOSET RECEPTACLES (1080VA)	3/4" – 4#10(P), 1#10(G)	LP1-12,14
	3/4" – 6#10(P), 3#10(G)	"SUB1-SWGR-100" SPACE HEATERS (1700VA)	1P-20A	CKT-13	CKT-14	1P-20A	CABLE CLOSET RECEPTACLES (720VA)	INCLUDED IN CONDUIT WITH CIRCUIT NO. 12	
LP1-13,15,17	INCLUDED IN CONDUIT WITH CIRCUIT NO. 13	"SUB1-SWGR-100" SPACE HEATERS (1700VA)	1P-20A	CKT-15	CKT-16	1P-20A	ELECTRICAL EQUIPMENT SPACE RECEPTACLES (720VA)	3/4" – 6#10(P), 1#10(G)	LP1-16,18,20
	INCLUDED IN CONDUIT WITH CIRCUIT NO. 13	"SUB1-SWGR-100" SPACE HEATERS (1700VA)	1P-20A	CKT-17	CKT-18	1P-20A	ELECTRICAL EQUIPMENT SPACE RECEPTACLES (720VA)	INCLUDED IN CONDUIT WITH CIRCUIT NO. 16	
	3/4" – 6#10(P), 3#10(G)	"SUB1-SWGR-200" SPACE HEATERS (1700VA)	1P-20A	CKT-19	CKT-20	1P-20A	ELECTRICAL EQUIPMENT SPACE RECEPTACLES (720VA)	INCLUDED IN CONDUIT WITH CIRCUIT NO. 16	
LP1-19,21,23	INCLUDED IN CONDUIT WITH CIRCUIT NO. 19	"SUB1-SWGR-200" SPACE HEATERS (1700VA)	1P-20A	CKT-21	CKT-22	1P-20A	CONTROL EQUIPMENT SPACE RECEPTACLES (540VA)	3/4" – 4#10(P), 1#10(G)	LP1-22,24
	INCLUDED IN CONDUIT WITH CIRCUIT NO. 19	"SUB1-SWGR-200" SPACE HEATERS (1700VA)	1P-20A	CKT-23	CKT-24	1P-20A	CONTROL EQUIPMENT SPACE RECEPTACLES (540VA)	INCLUDED IN CONDUIT WITH CIRCUIT NO. 22	
LP1-25	3/4" – 2#10(P), 1#10(G)	12470 BUS DUCT SPACE HEATER (500VA)	1P-20A	CKT-25	CKT-26	1P-20A	MECHANICAL EQUIPMENT SPACE RECEPTACLES (540VA)	3/4" – 4#10(P), 1#10(G)	LP1-26,28
	3/4" – 4#10(P), 1#10(G)	EXTERIOR LIGHTING (663VA)	2P-20A	CKT-27 CKT-29	CKT-28	1P-20A	MECHANICAL EQUIPMENT SPACE RECEPTACLES (540VA)	INCLUDED IN CONDUIT WITH CIRCUIT NO. 26	
LP1-27,29,31					CKT-30	1P-20A	ELECTRICAL EQUIPMENT SPACE LIGHTING SWITCH "A" (1900VA)	3/4" – 6#10(P), 3#10(G)	LP1-30,32,34
	INCLUDED IN CONDUIT WITH CIRCUIT NO. 27,29	LIGHTING CONTACTOR "SUB1-LC-001" CONTROL CIRCUIT (100VA)	1P-20A	CKT-31	CKT-32	1P-20A	ELECTRICAL EQUIPMENT SPACE LIGHTING SWITCH "B" (1900VA)	INCLUDED IN CONDUIT WITH CIRCUIT NO. 4	
LP1-33	3/4" – 2#10(P), 1#10(G)	LIGHTING CONTROL PANEL "SUB1-CP-LCP1" CONTROL CIRCUIT (100VA)	1P-20A	CKT-33	CKT-34	1P-20A	ELECTRICAL EQUIPMENT SPACE LIGHTING SWITCH "C" (1752VA)	INCLUDED IN CONDUIT WITH CIRCUIT NO. 4	
	3/4" – 4#10(P), 1#10(G)	SUBSTATION MANAGEMENT RELAY CONTROL PANEL "SUB1-CP-002" LIGHT AND FAN (70VA)	1P-20A	CKT-35	CKT-36	1P-20A	MECHANICAL EQUIPMENT SPACE LIGHTING (340VA)	3/4" – 2#10(P), 1#10(G)	LP1-36
LP1-35,37	INCLUDED IN CONDUIT WITH CIRCUIT NO. 35	SUBSTATION MANAGEMENT RELAY CONTROL PANEL "SUB1-CP-002" RECEPTACLE (180VA)	1P-20A	CKT-37	CKT-38	1P-20A	CONTROL EQUIPMENT SPACE LIGHTING (710VA)	3/4" – 2#10(P), 1#10(G)	LP1-38
	FUTURE	SPARE	1P-20A	CKT-39	CKT-40	1P-20A	CABLE CLOSET LIGHTING (814VA)	3/4" – 2#10(P), 1#10(G)	LP1-40
	FUTURE	SPARE	1P-20A	CKT-41	CKT-42	1P-20A	SPARE	FUTURE	

1

KEY NOTES:

1. ALTHOUGH NOT SHOWN HERE, PANELBOARD IS 54-POLE. FURNISH AND INSTALL AN ADDITIONAL 8 SPARE 1P-20A BREAKERS FROM WHAT IS SHOWN HERE.

BAR LENGTH ON ORIGINAL DRAWING EQUALS ONE INCH, ADJUST SCALE ACCORDINGLY.

REUSE OF DOCUMENTS

This document, and the designs incorporated herein, is an instrument of professional service that has been developed, designed and prepared by Harutunian Engineering, Inc., and is not to be used, in whole or in part, for any other project without giving written notice to Harutunian Engineering, Inc.

NO.	DATE:	DESCRIPTION

HARUTUNIAN ENGINEERING INCORPORATED
TEXAS FIRM REGISTRATION NUMBER F-2408
ENGINEERING AND ENVIRONMENTAL CONSULTANTS
8100 CROSS PARK DRIVE
AUSTIN, TEXAS 78754

STATE OF TEXAS
SHANT HARUTUNIAN
87735
REGISTERED
PROFESSIONAL ENGINEER
10/7/2019

DESIGNED BY:	HEI
CHECKED BY:	HEI
APPROVED BY:	HEI
SUBMITTAL DATE:	OCTOBER 2019
SCALE:	AS SHOWN

SOUTH AUSTIN REGIONAL WASTEWATER TREATMENT PLANT
ELECTRICAL SUBSTATION NO. 1 REPLACEMENT PROJECT
CIP I.D.# 3333.032

SUBSTATION NO. 1 PANEL SCHEDULE PROPOSED (SHEET 3 OF 4)

PROJECT NO: 2014-300 | SHT. 672 OF 866 | DWG NO. SUB1-E-071

PANELBOARD "SUB1-LP-002"
240/120V, 225A BUS, 1ø, 3W

A | B | N

MAIN CB 2P-150A

LP2-1	3/4" - 2#10(P), 1#10(G)	24VDC POWER SUPPLY "SUB1-PS-001" LINE 1 (600VA)	1P-20A	CKT-1	CKT-2	1P-20A	PLC "SUB1-PLC-001" (160VA)	1" - 6#10(P), 3#10(G)	
LP2-3,5	1" - 4#10(P), 2#10(G)	24VDC POWER SUPPLY "SUB1-PS-001" LINE 2 (600VA)	1P-20A	CKT-3	CKT-4	1P-20A	PLC "SUB1-PLC-002" (160VA)	INCLUDED IN CONDUIT WITH CIRCUIT NO. 2	LP2-2,4,6
	INCLUDED IN CONDUIT WITH CIRCUIT NO. 3	"SUB1-PLC-000" AND "SUB1-OIU-001" (260)	1P-20A	CKT-5	CKT-6	1P-20A	PLC "SUB1-PLC-003" (160VA)	INCLUDED IN CONDUIT WITH CIRCUIT NO. 2	
LP2-7,9,11	1" - 6#10(P), 3#10(G)	COMMUNICATION EQUIPMENT IN "SUB1-MCP-001" (1050VA)	1P-20A	CKT-7	CKT-8	1P-20A	PLC "SUB1-PLC-004" (160VA)	1" - 6#10(P), 3#10(G)	
	INCLUDED IN CONDUIT WITH CIRCUIT NO. 7	"SUB1-SWGR-100" MAIN, TIE, & CPT BREAKER (60VA)	2P-20A	CKT-9	CKT-10	1P-20A	PLC "SUB1-PLC-005" (160VA)	INCLUDED IN CONDUIT WITH CIRCUIT NO. 8	LP2-8,10,12
	INCLUDED IN CONDUIT WITH CIRCUIT NO. 7	"SUB1-SWGR-100" FEEDER BREAKERS (220VA)	1P-20A	CKT-11	CKT-12	1P-20A	PLC "SUB1-PLC-006" (160VA)	INCLUDED IN CONDUIT WITH CIRCUIT NO. 8	
LP2-13,15,17	1" - 6#10(P), 3#10(G)	"SUB1-SWGR-200" MAIN, TIE, & CPT BREAKER (60VA)	1P-20A	CKT-13	CKT-14	1P-20A	SECURITY CABINET "SUB1-CP-SEC" (180VA)	SEE CONDUIT "SUB1-CPSEC-P"	
	INCLUDED IN CONDUIT WITH CIRCUIT NO. 13	"SUB1-SWGR-200" FEEDER BREAKERS (220VA)	1P-20A	CKT-15	CKT-16	1P-20A	TELEPHONE PANEL "SUB1-CP-TELE" (180VA)	3/4" - 2#10(P), 1#10(G)	LP2-16
	INCLUDED IN CONDUIT WITH CIRCUIT NO. 13	SUBSTATION ALARM (20VA)	1P-20A	CKT-17	CKT-18	1P-20A	ELECTRICAL EQUIPMENT SPACE RECEPTACLE (180VA)	3/4" - 2#10(P), 1#10(G)	LP2-18
LP2-19	3/4" - 2#10(P), 1#10(G)	HVAC CONTROL WIRING OUTSIDE AIR DAMPERS (19VA)	1P-20A	CKT-19	CKT-20	1P-20A	EMERGENCY LIGHTS ELECTRICAL EQUIPMENT SPACE (1258VA)	3/4" - 2#10(P), 1#10(G)	LP2-20
LP2-21,23,25	3/4" - 6#10(P), 1#10(G)	BREAKER TEST CONTROL PANEL "SUB1-CP-001"	1P-20A	CKT-21	CKT-22	1P-20A	EMERGENCY LIGHTS CONTROL AND MECHANICAL EQUIPMENT SPACES (296VA)	3/4" - 2#10(P), 1#10(G)	LP2-22
	INCLUDED IN CONDUIT WITH CIRCUIT NO. 21	BREAKER TEST AREA RECEPTACLES (360VA)	1P-20A	CKT-23	CKT-24	1P-20A	FIRE ALARM PANEL (360VA)	3/4" - 2#10(P), 1#10(G)	LP2-24
	INCLUDED IN CONDUIT WITH CIRCUIT NO. 21	BREAKER TEST AREA RECEPTACLES (360VA)	1P-20A	CKT-25	CKT-26	1P-20A	SPARE		
		SPARE	1P-20A	CKT-27	CKT-28	1P-20A	SPARE		
		SPARE	1P-20A	CKT-29	CKT-30	1P-20A	SPARE		

BAR LENGTH ON ORIGINAL DRAWING EQUALS ONE INCH, ADJUST SCALE ACCORDINGLY.

REUSE OF DOCUMENTS

This document, and the designs incorporated herein, is an instrument of professional service that has been developed, designed and prepared by Harutunian Engineering, Inc., and is not to be used, in whole or in part, for any other project without giving written notice to Harutunian Engineering, Inc.

NO.	DATE:	DESCRIPTION

HARUTUNIAN ENGINEERING INCORPORATED

TEXAS FIRM REGISTRATION NUMBER F-2408

ENGINEERING AND ENVIRONMENTAL CONSULTANTS
8100 CROSS PARK DRIVE
AUSTIN, TEXAS 78754

STATE OF TEXAS
SHANT HARUTUNIAN
87735
REGISTERED
PROFESSIONAL ENGINEER
10/7/2019

DESIGNED BY:	HEI
CHECKED BY:	HEI
APPROVED BY:	HEI
SUBMITTAL DATE:	OCTOBER 2019
SCALE:	AS SHOWN

SOUTH AUSTIN REGIONAL WASTEWATER TREATMENT PLANT
ELECTRICAL SUBSTATION NO. 1 REPLACEMENT PROJECT
CIP I.D.# 3333.032

SUBSTATION NO. 1 PANEL SCHEDULE PROPOSED (SHEET 4 OF 4)

PROJECT NO: 2014-300 | SHT. 673 OF 866 | DWG NO. SUB1-E-072

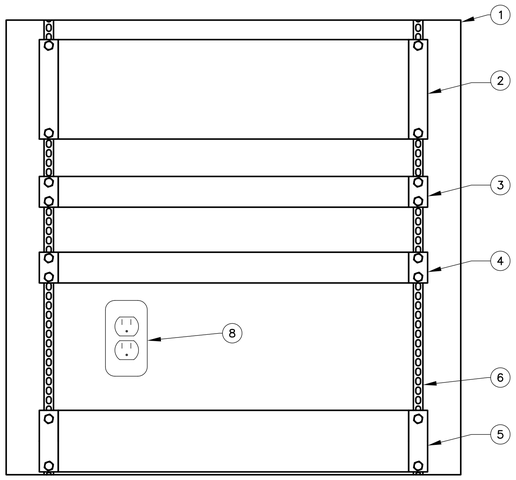

CONTROL PANEL "SUB1–CP–TELE"
INTERIOR ELEVATION
SCALE: N.T.S.

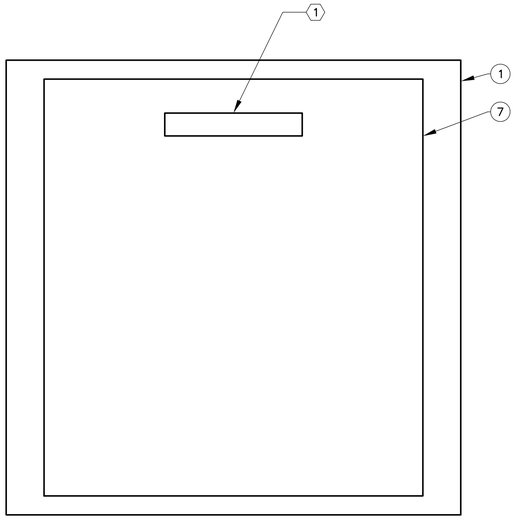

CONTROL PANEL "SUB1–CP–TELE"
EXTERIOR FRONT ELEVATION
SCALE: N.T.S.

EQUIPMENT SCHEDULE TELEPHONE CONTROL PANEL "SUB1–CP–TELE"

MARK	DESCRIPTION	PRODUCT SPECIFICATIONS
1	24" HIGH X 24" WIDE X 24" DEEP WALL MOUNTED ENCLOSURE.	ENCLOSURE SHALL BE DOUBLE HINGED WALL MOUNTED STEEL ENCLOSURE. ENCLOSURE SHALL HAVE INTEGRAL RACK ANGLES, SOLID TOP, SOLID BOTTOM, VENTILATED SIDE WALLS, AND FRONT DOOR WITH SAFETY GLASS VIEWING WINDOW. ENCLOSURE SHALL INCLUDE RACK ANGLES DRILLED AND TAPPED FOR 10–32 THREADS PER EIA STANDARDS. FURNISH AND INSTALL AS MANUFACTURED BY RITTAL MODEL No. DK7507.120 WITH GROUNDING BAR PART No. 7113.000, OR APPROVED EQUAL
2	FIBER OPTIC PATCH PANEL	FURNISH AND INSTALL TYPE 2 FIBER OPTIC PATCH PANEL PER SECTION 17600 OF THE CONTRACT SPECIFICATIONS. ALTHOUGH REQUIRED OTHERWISE BY THE SPECIFICATIONS, FURNISH AND INSTALL A TOTAL OF SIX (6) CONNECTOR PANELS AS FOLLOWS: A. THREE OF PANELS SHALL EACH HAVE SIX (6) SC–DUPLEX SINGLE MODE ADAPTERS OF CERAMIC TYPE. B. THREE OF PANELS SHALL EACH HAVE SIX (6) SC–DUPLEX MULTI–MODE MODE ADAPTERS OF CERAMIC TYPE.
3	ETHERNET SWITCH	CISCO SG300–10P OR APPROVED EQUAL
4	COPPER PATCH PANEL	PATCH PANEL SHALL BE METAL, RACK MOUNTABLE, WITH 24 PORTS AND COLOR CODED FRONT PORT LABELING. PATCH PANEL SHALL MEET OR EXCEED REQUIREMENTS FOR CATEGORY 6A PER TIA/EIA–568–C.2–10. PATCH PANEL SHALL BE AS MANUFACTURED BY SIEMON, PANDUIT, HUBBELL, COMMSCOPE, OR APPROVED EQUAL.
5	UNINTERRUPTIBLE POWER SUPPLY, RACK MOUNTABLE	ONLINE, RACKMOUNTABLE UPS WITH 120V, 500 VA MINIMUM OUTPUT RATING. UPS SHALL BE CAPABLE OF PROVIDING 15 MINUTES OF CONTINUOUS FULL LOAD OUTPUT CURRENT AFTER UPS INPUT SOURCE IS REMOVED. UPS SHALL ALSO HAVE SNMP NETWORK COMMUNICATION MODULE WIRED TO THE ETHERNET SWITCH. UPS SHALL HAVE USB CABLE AND MANUFACTURER'S CONFIGURATION SOFTWARE. FURNISH AND INSTALL UPS AS MANUFACTURED BY EATON MODEL PW9130L700R–XL2U WITH "NETWORK CARD MS" SNMP COMMUNICATION MODULE OR APPROVED EQUAL. WIRE TO THE ETHERNET SWITCH.
6	19" RACK SYSTEM	INTEGRAL WITH ENCLOSURE. REFER TO ENCLOSURE SPECIFICATIONS ABOVE. FURNISH AND INSTALL ALL HARDWARE NECESSARY TO MOUNT ALL EQUIPMENT INSIDE OF THIS CONTROL PANEL.
7	DOOR WINDOW KIT	INTEGRAL WITH ENCLOSURE DOOR. REFER TO ENCLOSURE SPECIFICATIONS ABOVE.
8	CONVENIENCE RECEPTACLE	FURNISH AND INSTALL SURFACE MOUNTED ON BACK WALL OF CONTROL PANEL PER SECTION 17200 OF THE CONTRACT SPECIFICATIONS. ALTHOUGH REQUIRED OTHERWISE BY THE SPECIFICATIONS, ROUTE RECEPTACLE CIRCUITING INSIDE OF THIS CONTROL PANEL IN LIQUID–TIGHT FLEXIBLE CONDUIT.

GENERAL NOTES:

1. ALL ASPECTS OF CONSTRUCTION, INSTALLATION AND TESTING SHALL COMPLY WITH ALL RELATED DIVISION 17 REQUIREMENTS. REFER TO THE DIVISION 17 SPECIFICATIONS AND THE INSTRUMENTATION AND CONTROL SYSTEM DRAWINGS FOR ADDITIONAL REQUIREMENTS AND MAKE ALL FINAL CONNECTIONS. SUBMIT SHOP DRAWINGS PER SECTIONS 01300 AND 01730 OF THE CONTRACT SPECIFICATIONS.
2. THE CONTRACTOR SHALL SIZE ALL ENCLOSURES PER, AND IN ACCORDANCE WITH, THE REQUIREMENTS OF THE NATIONAL ELECTRIC CODE (N.E.C.).
3. FURNISH TWENTY FOUR (24) 18" LONG PATCH CORDS EACH FOR COPPER ETHERNET, SINGLE MODE FIBER, AND MULTI–MODE FIBER OPTIC CABLE. COORDINATE INSTALLATION WITH THE OWNER.
4. LABEL EACH PORT OF EACH PATCH PANEL. FURNISH AND INSTALL TTP CONTINUOUS POLYESTER THERMAL TRANSFER LABEL AS MANUFACTURED BY TYCO, WITH RIBBON AND PRINTER BY LABEL MANUFACTURER. LABEL SHALL BE WHITE WITH BLACK LETTERING OF MINIMUM HEIGHT 0.25 INCHES. COORDINATE TEXT WITH THE OWNER.

KEY NOTES:

(1) FURNISH AND INSTALL WHITE NAMEPLATE WITH BLACK LETTERS, PER SPECIFICATIONS WITH LETTER SIZE MINIMUM 3/8". NAMEPLATE INSCRIPTION TO READ: "TELEPHONE SYSTEM CONTROL PANEL SUB1–CP–TELE".

BAR LENGTH ON ORIGINAL DRAWING EQUALS ONE INCH, ADJUST SCALE ACCORDINGLY.

REUSE OF DOCUMENTS

This document, and the designs incorporated herein, is an instrument of professional service that has been developed, designed and prepared by Harutunian Engineering, Inc., and is not to be used, in whole or in part, for any other project without giving written notice to Harutunian Engineering, Inc.

NO.	DATE:	DESCRIPTION

HARUTUNIAN ENGINEERING INCORPORATED
TEXAS FIRM REGISTRATION NUMBER F–2408
ENGINEERING AND ENVIRONMENTAL CONSULTANTS
8100 CROSS PARK DRIVE
AUSTIN, TEXAS 78754

STATE OF TEXAS
SHANT HARUTUNIAN
87735
REGISTERED
PROFESSIONAL ENGINEER
10/7/2019

DESIGNED BY:	AS SHOWN
CHECKED BY:	HEI
APPROVED BY:	HEI
SUBMITTAL DATE:	OCTOBER 2019
SCALE:	N.T.S.

SOUTH AUSTIN REGIONAL WASTEWATER TREATMENT PLANT
ELECTRICAL SUBSTATION NO. 1 REPLACEMENT PROJECT
CIP I.D.# 3333.032

SUBSTATION NO. 1 TELEPHONE SYSTEM – PROPOSED (SHEET 1 OF 2)

PROJECT NO: 2014–300 | SHT. 674 OF 866 | DWG NO. SUB1–I–TELE1

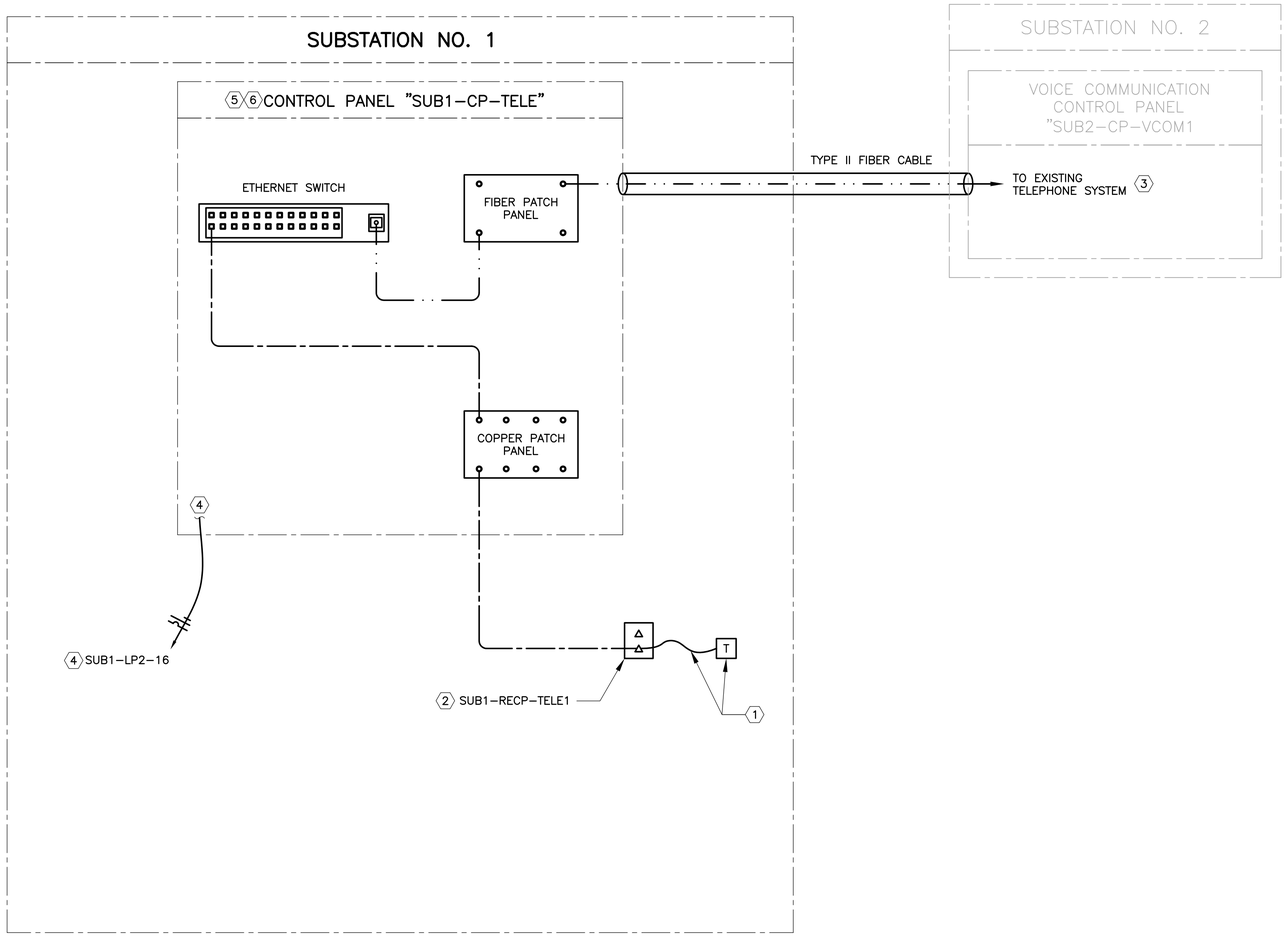

KEY NOTES:

1. TELEPHONE AND TELEPHONE CORD TO BE FURNISHED BY OWNER. INSTALL AS DIRECTED BY OWNER AND MAKE ALL FINAL CONNECTIONS AT NO ADDITIONAL COST TO THE OWNER. SURFACE MOUNT TO WALL, SIMILAR TO DETAILS ON DRAWING NO. [TD-E-010]. COORDINATE FINAL LOCATION WITH OWNER.
2. TELEPHONE/VOICE OUTLET. REFER TO DRAWING NO. [SUB1-E-044] FOR LOCATION.
3. COORDINATE CONNECTION TO EXISTING TELEPHONE SYSTEM WITH OWNER. FURNISH, INSTALL, AND MAKE ALL FINAL CONNECTIONS TO THE EXISTING TELEPHONE SYSTEM IN SUBSTATION NO. 2. REFER TO PLAN DRAWINGS FOR LOCATION.
4. LIGHTING CIRCUIT SERVES CONVENIENCE RECEPTACLE WITHIN CONTROL PANEL "SUB1-CP-TELE". PLUG PROPOSED UNINTERRUPTIBLE POWER SUPPLY (UPS) INTO CONVENIENCE RECEPTACLE. UPS PROVIDES POWER FOR ALL EQUIPEMNT/DEVICES WITHIN CONTROL PANEL. REFER TO DRAWING NO. [SUB1-I-TELE1] FOR ADDITIONAL INFORMATION.
5. REFER TO DRAWING NO. [SUB1-I-TELE1] FOR DESCRIPTION OF EQUIPMENT/DEVICES WITHIN CONTROL PANEL.
6. FURNISH TWELVE (12) ADDITIONAL PATCH CORD CABLES FOR EACH INSTALLED PATCH PANEL AND LEAVE IN CABINET FOR OWNERS USE.

OVERALL TELEPHONE SYSTEM ARCHITECTURE

SCALE: N.T.S.

BAR LENGTH ON ORIGINAL DRAWING EQUALS ONE INCH, ADJUST SCALE ACCORDINGLY.

REUSE OF DOCUMENTS

This document, and the designs incorporated herein, is an instrument of professional service that has been developed, designed and prepared by Harutunian Engineering, Inc., and is not to be used, in whole or in part, for any other project without giving written notice to Harutunian Engineering, Inc.

NO.	DATE:	DESCRIPTION

HARUTUNIAN ENGINEERING INCORPORATED
TEXAS FIRM REGISTRATION NUMBER F-2408
ENGINEERING AND ENVIRONMENTAL CONSULTANTS
8100 CROSS PARK DRIVE
AUSTIN, TEXAS 78754

STATE OF TEXAS
SHANT HARUTUNIAN
87735
REGISTERED
PROFESSIONAL ENGINEER
10/7/2019

DESIGNED BY:	AS NOTED SHOWN
CHECKED BY:	HEI
APPROVED BY:	HEI
SUBMITTAL DATE:	OCTOBER 2019
SCALE:	N.T.S.

SOUTH AUSTIN REGIONAL WASTEWATER TREATMENT PLANT
ELECTRICAL SUBSTATION NO. 1 REPLACEMENT PROJECT
CIP I.D.# 3333.032

SUBSTATION NO. 1
TELEPHONE SYSTEM –
PROPOSED (SHEET 2 OF 2)

PROJECT NO: 2014-300 | SHT. 675 OF 866 | DWG NO. SUB1-I-TELE2

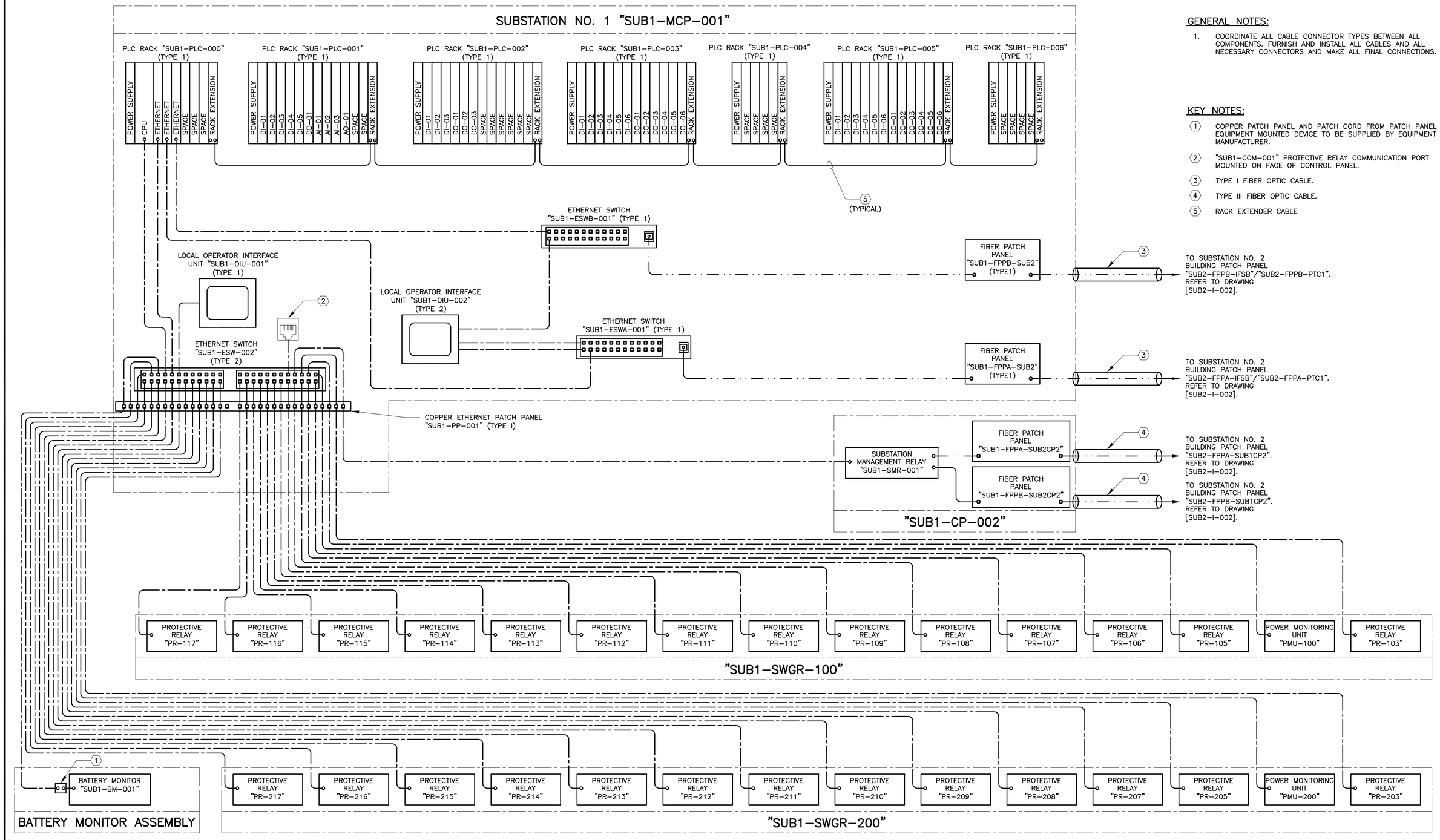

GENERAL NOTES:

1. COORDINATE ALL CABLE CONNECTOR TYPES BETWEEN ALL COMPONENTS. FURNISH AND INSTALL ALL CABLES AND ALL NECESSARY CONNECTORS AND MAKE ALL FINAL CONNECTIONS.

KEY NOTES:

1. COPPER PATCH PANEL AND PATCH CORD FROM PATCH PANEL TO EQUIPMENT MOUNTED DEVICE TO BE SUPPLIED BY EQUIPMENT MANUFACTURER.
2. "SUB1-COM-001" PROTECTIVE RELAY COMMUNICATION PORT MOUNTED ON FACE OF CONTROL PANEL.
3. TYPE I FIBER OPTIC CABLE.
4. TYPE III FIBER OPTIC CABLE.
5. RACK EXTENDER CABLE

BAR LENGTH ON ORIGINAL DRAWING EQUALS ONE INCH, ADJUST SCALE ACCORDINGLY.

REUSE OF DOCUMENTS

This document, and the designs incorporated herein, is an instrument of professional service that has been developed, designed and prepared by Harutunian Engineering, Inc., and is not to be used, in whole or in part, for any other project without giving written notice to Harutunian Engineering, Inc.

NO.	DATE:	DESCRIPTION

HARUTUNIAN ENGINEERING INCORPORATED

TEXAS FIRM REGISTRATION NUMBER F-2408

ENGINEERING AND ENVIRONMENTAL CONSULTANTS
8100 CROSS PARK DRIVE
AUSTIN, TEXAS 78754

STATE OF TEXAS
SHANT HARUTUNIAN
87735
REGISTERED
PROFESSIONAL ENGINEER
10/7/2019

DESIGNED BY:	HEI
CHECKED BY:	HEI
APPROVED BY:	HEI
SUBMITTAL DATE:	OCTOBER 2019
SCALE:	AS SHOWN

SOUTH AUSTIN REGIONAL WASTEWATER TREATMENT PLANT
ELECTRICAL SUBSTATION NO. 1 REPLACEMENT PROJECT
CIP I.D.# 3333.032

SUBSTATION NO. 1 PLC SYSTEM ARCHITECTURE – PROPOSED

PROJECT NO: 2014-300 | SHT. 676 OF 866 | DWG NO. SUB1-I-001

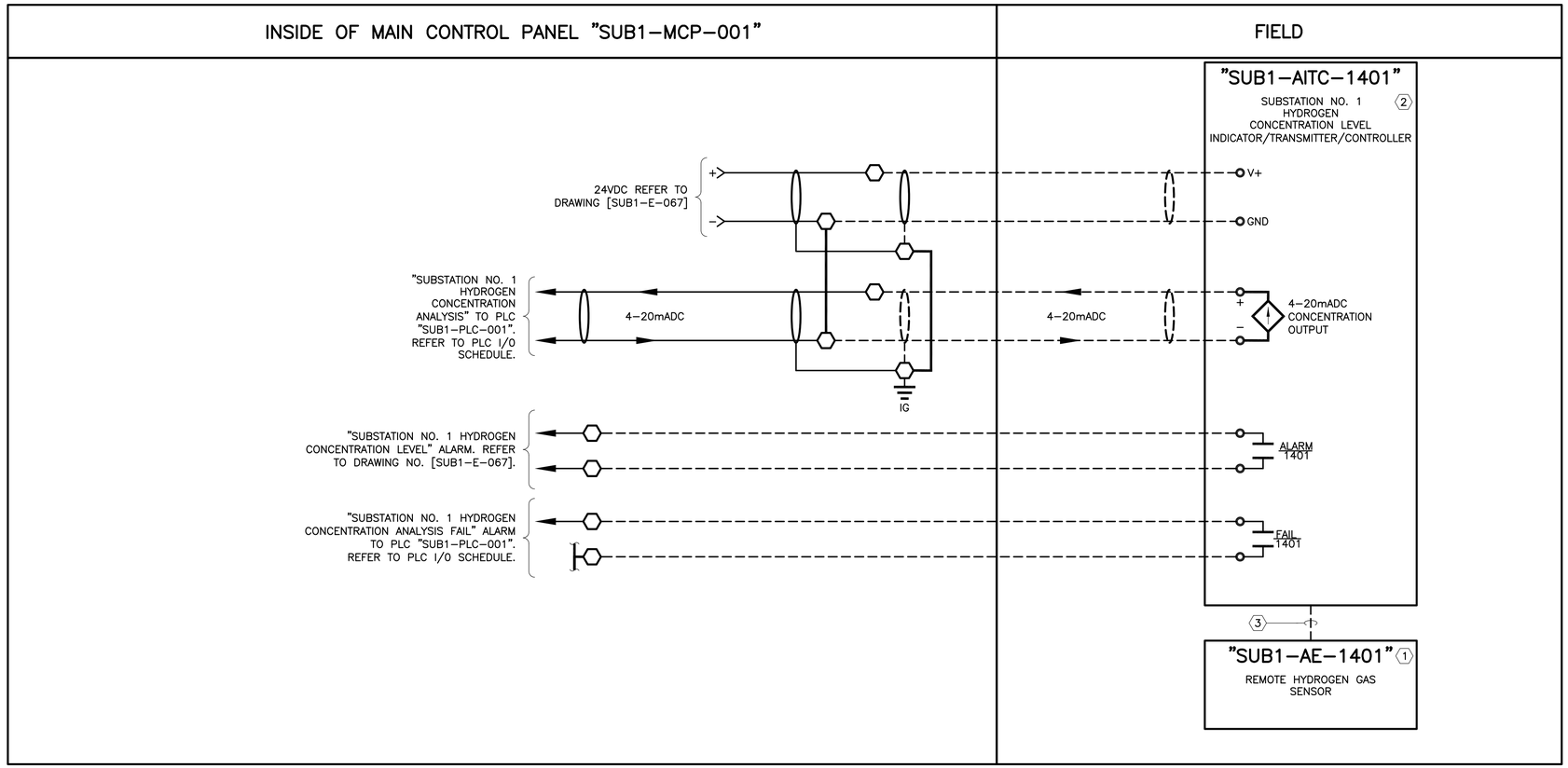

SUBSTATION NO. 1 HYDROGEN CONCENTRATION LEVEL – INSTRUMENT WIRING SCHEMATIC

SCALE: N.T.S.

KEY NOTES:

1. REMOTE HYDROGEN SENSOR SHALL BE MOUNTED WITHIN 6 INCHES OF CEILING.
2. HYDROGEN MONITOR/JUNCTION BOX SHALL BE MOUNTED 5 FEET ABOVE THE FINISHED FLOOR.
3. PROVIDE AND INSTALL 1 #16 2–CONDUCTOR TWISTED SHIELDED CABLE AND 1 #16 3–CONDUCTOR TWISTED SHIELDED CABLE, FOR A TOTAL OF 5 CONDUCTORS, IN CONDUIT BETWEEN REMOTE HYDROGEN SENSOR AND MONITOR/JUNCTION BOX. REFER TO MANUFACTURER'S WIRING INSTRUCTIONS FOR ADDITIONAL INFORMATION.
4. THIS DRAWING IS TYPICAL FOR MULTIPLE EQUIPMENT. THE ACTUAL TAG FOR EACH EQUIPMENT WILL DIFFER FROM THAT SHOWN HERE. REFER TO THE TAG REPLACEMENT SCHEDULE ON THIS DRAWING TO DERIVE THE CORRESPONDING TAGS FOR EACH PROPOSED EQUIPMENT.

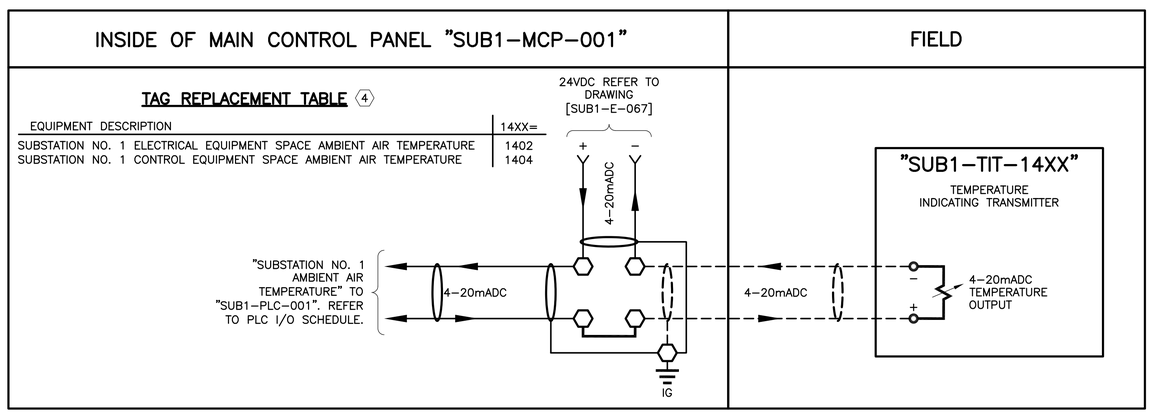

SUBSTATION NO. 1 AMBIENT AIR TEMPERATURE – INSTRUMENT WIRING SCHEMATIC

SCALE: N.T.S.

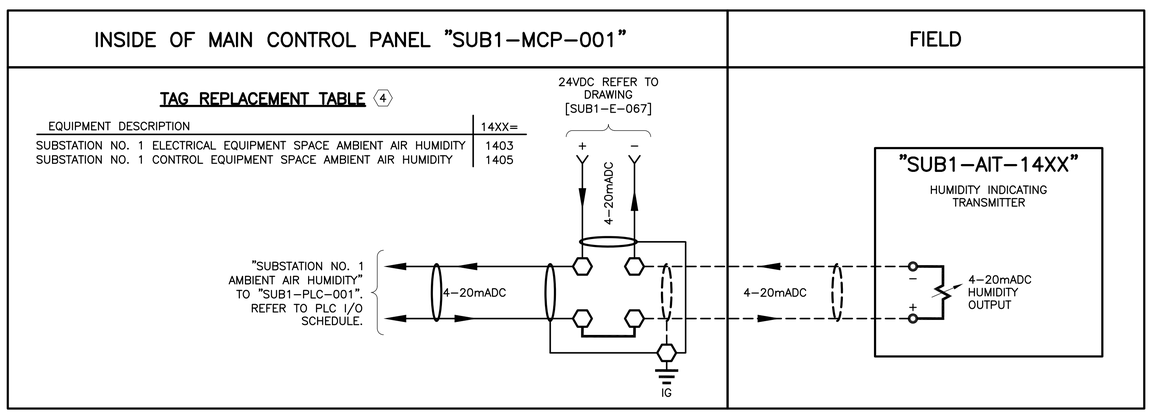

SUBSTATION NO. 1 AMBIENT AIR HUMIDITY – INSTRUMENT WIRING SCHEMATIC

SCALE: N.T.S.

BAR LENGTH ON ORIGINAL DRAWING EQUALS ONE INCH, ADJUST SCALE ACCORDINGLY.

REUSE OF DOCUMENTS

This document, and the designs incorporated herein, is an instrument of professional service that has been developed, designed and prepared by Harutunian Engineering, Inc., and is not to be used, in whole or in part, for any other project without giving written notice to Harutunian Engineering, Inc.

NO.	DATE:	DESCRIPTION

HARUTUNIAN ENGINEERING INCORPORATED

TEXAS FIRM REGISTRATION NUMBER F–2408

ENGINEERING AND ENVIRONMENTAL CONSULTANTS
8100 CROSS PARK DRIVE
AUSTIN, TEXAS 78754

STATE OF TEXAS
SHANT HARUTUNIAN
87735
REGISTERED
PROFESSIONAL ENGINEER
10/7/2019

DESIGNED BY:	HEI
CHECKED BY:	HEI
APPROVED BY:	HEI
SUBMITTAL DATE:	OCTOBER 2019
SCALE:	AS SHOWN

SOUTH AUSTIN REGIONAL WASTEWATER TREATMENT PLANT
ELECTRICAL SUBSTATION NO. 1 REPLACEMENT PROJECT
CIP I.D.# 3333.032

SUBSTATION NO. 1 PLC SYSTEM LOOP DIAGRAM – PROPOSED (SHEET 1 OF 3)

PROJECT NO: 2014–300 | SHT. 677 OF 866 | DWG NO. SUB1–I–002

KEY NOTES:

(1) THIS DRAWING IS TYPICAL FOR MULTIPLE EQUIPMENT. THE ACTUAL TAG FOR EACH EQUIPMENT WILL DIFFER FROM THAT SHOWN HERE. REFER TO THE TAG REPLACEMENT SCHEDULE ON THIS DRAWING TO DERIVE THE CORRESPONDING TAGS FOR EACH PROPOSED EQUIPMENT.

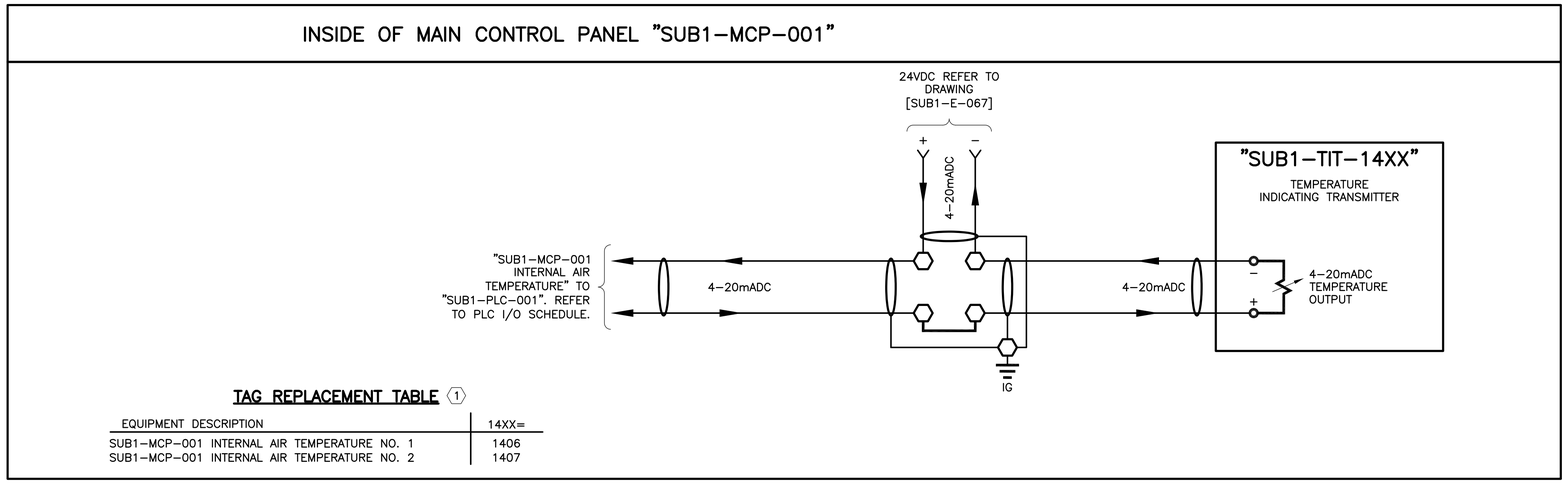

TAG REPLACEMENT TABLE (1)

EQUIPMENT DESCRIPTION	14XX=
SUB1–MCP–001 INTERNAL AIR TEMPERATURE NO. 1	1406
SUB1–MCP–001 INTERNAL AIR TEMPERATURE NO. 2	1407

TYPICAL CONTROL PANEL INTERNAL AIR TEMPERATURE – INSTRUMENT WIRING SCHEMATIC

SCALE: N.T.S.

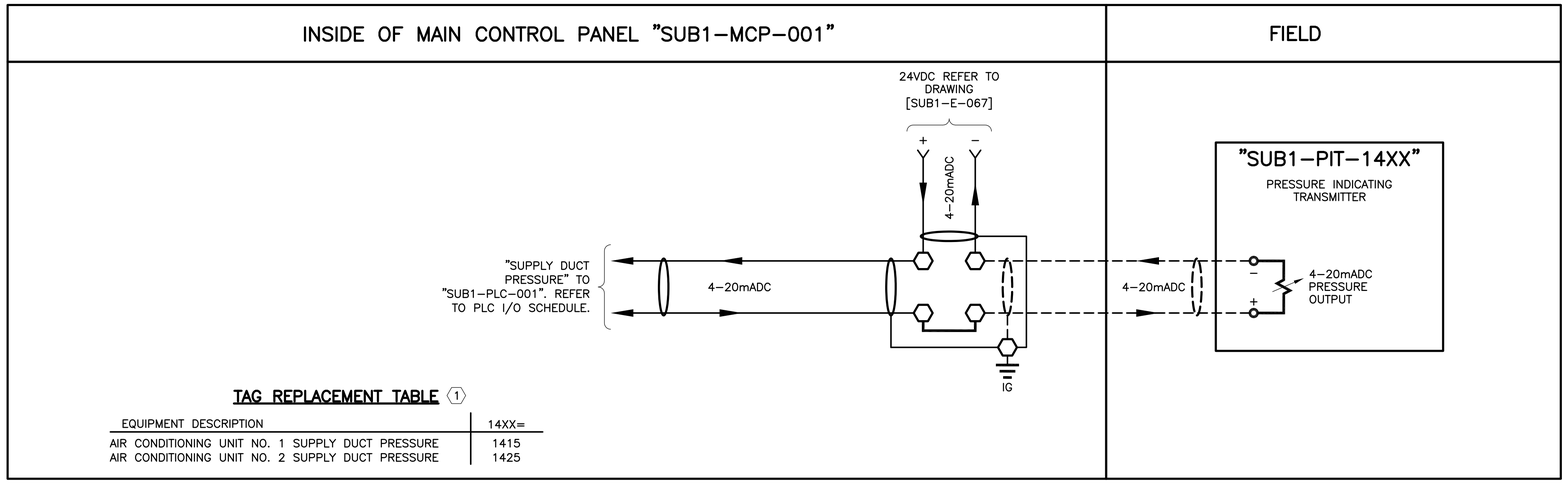

TAG REPLACEMENT TABLE (1)

EQUIPMENT DESCRIPTION	14XX=
AIR CONDITIONING UNIT NO. 1 SUPPLY DUCT PRESSURE	1415
AIR CONDITIONING UNIT NO. 2 SUPPLY DUCT PRESSURE	1425

TYPICAL SUPPLY DUCT PRESSURE – INSTRUMENT WIRING SCHEMATIC

SCALE: N.T.S.

BAR LENGTH ON ORIGINAL DRAWING EQUALS ONE INCH, ADJUST SCALE ACCORDINGLY.

REUSE OF DOCUMENTS

This document, and the designs incorporated herein, is an instrument of professional service that has been developed, designed and prepared by Harutunian Engineering, Inc., and is not to be used, in whole or in part, for any other project without giving written notice to Harutunian Engineering, Inc.

NO.	DATE:	DESCRIPTION

HARUTUNIAN ENGINEERING INCORPORATED

TEXAS FIRM REGISTRATION NUMBER F–2408

ENGINEERING AND ENVIRONMENTAL CONSULTANTS
8100 CROSS PARK DRIVE
AUSTIN, TEXAS 78754

STATE OF TEXAS
SHANT HARUTUNIAN
87735
REGISTERED
PROFESSIONAL ENGINEER
10/7/2019

DESIGNED BY:	HEI
CHECKED BY:	HEI
APPROVED BY:	HEI
SUBMITTAL DATE:	OCTOBER 2019
SCALE:	AS SHOWN

SOUTH AUSTIN REGIONAL WASTEWATER TREATMENT PLANT
ELECTRICAL SUBSTATION NO. 1 REPLACEMENT PROJECT
CIP I.D.# 3333.032

SUBSTATION NO. 1
PLC SYSTEM LOOP DIAGRAM – PROPOSED (SHEET 2 OF 3)

PROJECT NO: 2014–300 | SHT. 678 OF 866 | DWG NO. SUB1–I–003

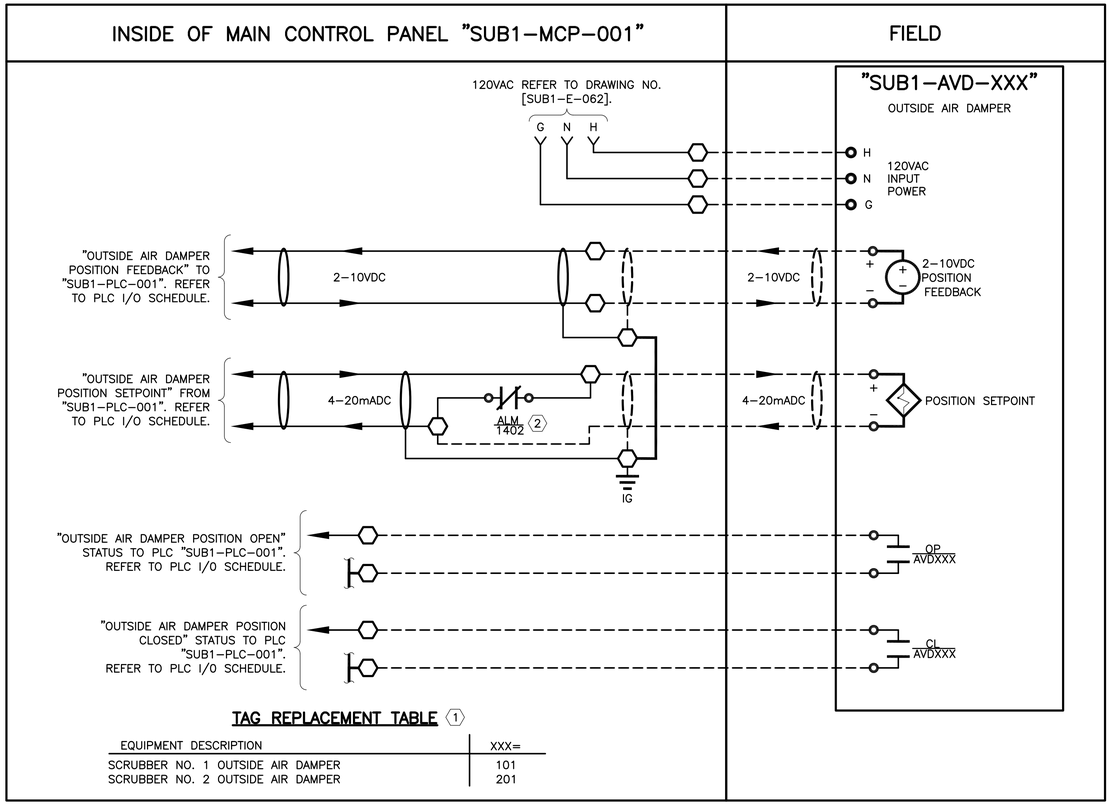

TAG REPLACEMENT TABLE (1)

EQUIPMENT DESCRIPTION	XXX=
SCRUBBER NO. 1 OUTSIDE AIR DAMPER	101
SCRUBBER NO. 2 OUTSIDE AIR DAMPER	201

TYPICAL OUTSIDE AIR DAMPER – INSTRUMENT WIRING SCHEMATIC

SCALE: N.T.S.

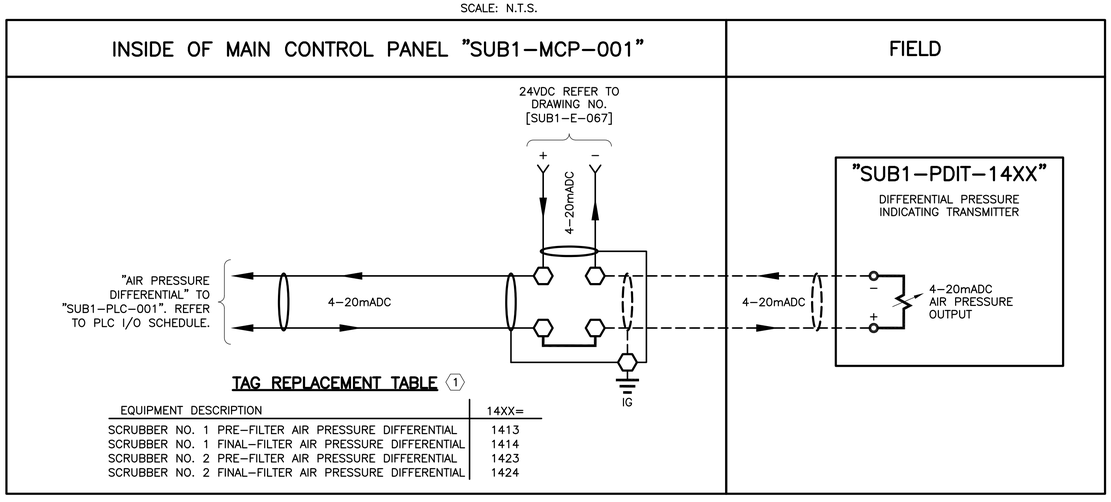

TAG REPLACEMENT TABLE (1)

EQUIPMENT DESCRIPTION	14XX=
SCRUBBER NO. 1 PRE–FILTER AIR PRESSURE DIFFERENTIAL	1413
SCRUBBER NO. 1 FINAL–FILTER AIR PRESSURE DIFFERENTIAL	1414
SCRUBBER NO. 2 PRE–FILTER AIR PRESSURE DIFFERENTIAL	1423
SCRUBBER NO. 2 FINAL–FILTER AIR PRESSURE DIFFERENTIAL	1424

TYPICAL AIR PRESSURE DIFFERENTIAL – INSTRUMENT WIRING SCHEMATIC

SCALE: N.T.S.

KEY NOTES:

(1) THIS DRAWING IS TYPICAL FOR MULTIPLE EQUIPMENT. THE ACTUAL TAG FOR EACH EQUIPMENT WILL DIFFER FROM THAT SHOWN HERE. REFER TO THE TAG REPLACEMENT SCHEDULE ON THIS DRAWING TO DERIVE THE CORRESPONDING TAGS FOR EACH PROPOSED EQUIPMENT.

(2) FAIL SAFE CONTACT. NORMALLY OPEN, CLOSES TO INDICATE ALARM OR POWER LOSS.

(3) MANUFACTURER PROVIDED CABLE/WIRE. COORDINATE LENGTH WITH MANUFACTURER.

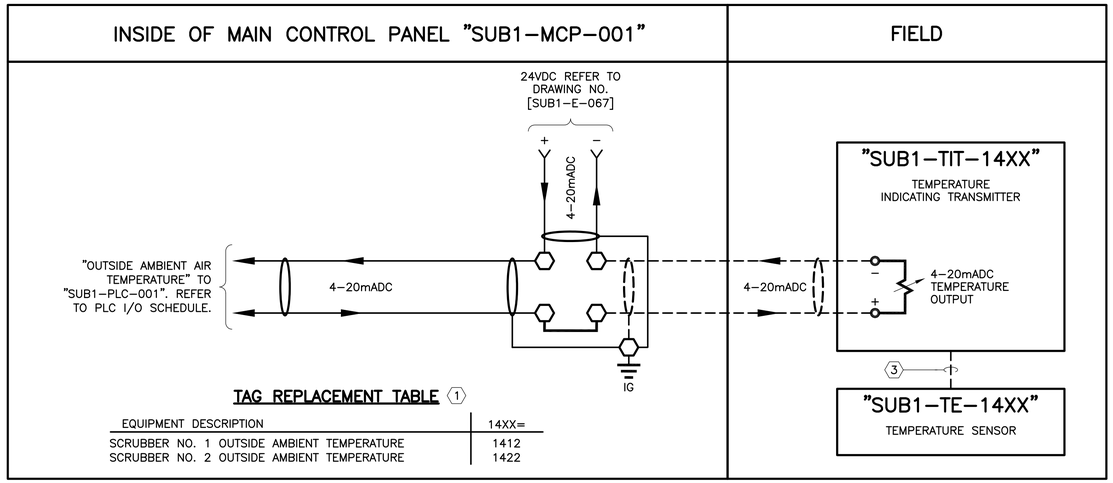

TAG REPLACEMENT TABLE (1)

EQUIPMENT DESCRIPTION	14XX=
SCRUBBER NO. 1 OUTSIDE AMBIENT TEMPERATURE	1412
SCRUBBER NO. 2 OUTSIDE AMBIENT TEMPERATURE	1422

TYPICAL OUTSIDE AMBIENT TEMPERATURE – INSTRUMENT WIRING SCHEMATIC

SCALE: N.T.S.

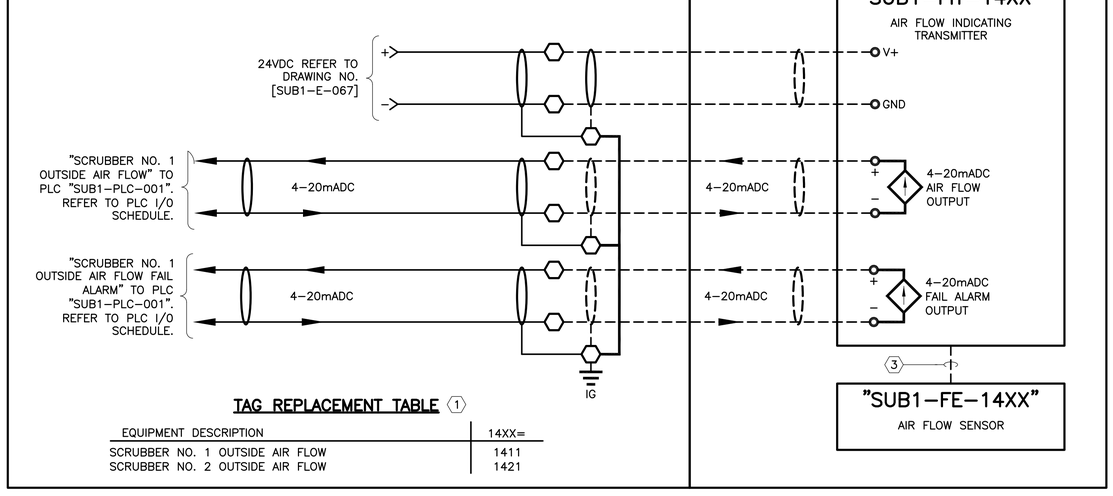

TAG REPLACEMENT TABLE (1)

EQUIPMENT DESCRIPTION	14XX=
SCRUBBER NO. 1 OUTSIDE AIR FLOW	1411
SCRUBBER NO. 2 OUTSIDE AIR FLOW	1421

TYPICAL SCRUBBER OUTSIDE AIR FLOW – INSTRUMENT WIRING SCHEMATIC

SCALE: N.T.S.

BAR LENGTH ON ORIGINAL DRAWING EQUALS ONE INCH, ADJUST SCALE ACCORDINGLY.

REUSE OF DOCUMENTS

This document, and the designs incorporated herein, is an instrument of professional service that has been developed, designed and prepared by Harutunian Engineering, Inc., and is not to be used, in whole or in part, for any other project without giving written notice to Harutunian Engineering, Inc.

NO.	DATE:	DESCRIPTION

HARUTUNIAN ENGINEERING INCORPORATED

TEXAS FIRM REGISTRATION NUMBER F–2408

ENGINEERING AND ENVIRONMENTAL CONSULTANTS
8100 CROSS PARK DRIVE
AUSTIN, TEXAS 78754

STATE OF TEXAS
SHANT HARUTUNIAN
87735
REGISTERED
PROFESSIONAL ENGINEER
10/7/2019

DESIGNED BY:	HEI
CHECKED BY:	HEI
APPROVED BY:	HEI
SUBMITTAL DATE:	OCTOBER 2019
SCALE:	AS SHOWN

SOUTH AUSTIN REGIONAL WASTEWATER TREATMENT PLANT
ELECTRICAL SUBSTATION NO. 1 REPLACEMENT PROJECT
CIP I.D.# 3333.032

SUBSTATION NO. 1
PLC SYSTEM LOOP DIAGRAM – PROPOSED (SHEET 3 OF 3)

PROJECT NO: 2014–300 | SHT. 679 OF 866 | DWG NO. SUB1–I–004

DISTRIBUTED CONTROL SYSTEM

"SUB1-MCP-001"

"SUB1-PLC-001"

SUBSTATION NO. 1 ELECTRICAL EQUIPMENT SPACE AMBIENT AIR TEMPERATURE INDICATOR — TI 1402
SUBSTATION NO. 1 ELECTRICAL ROOM AMBIENT AIR TEMPERATURE ALARM LOW — TAL 1402
SUBSTATION NO. 1 ELECTRICAL EQUIPMENT SPACE AMBIENT AIR TEMPERATURE ALARM HIGH — TAH 1402
SUBSTATION NO. 1 ELECTRICAL EQUIPMENT SPACE AMBIENT AIR HUMIDITY INDICATOR — AI 1403
SUBSTATION NO. 1 ELECTRICAL ROOM AMBIENT AIR HUMIDITY ANALYSIS ALARM HIGH — AH 1403
SUBSTATION NO. 1 CONTROL ROOM AMBIENT AIR TEMPERATURE INDICATOR — TI 1404
SUBSTATION NO. 1 CONTROL ROOM AMBIENT AIR TEMPERATURE ALARM LOW — TAL 1404
SUBSTATION NO. 1 CONTROL ROOM AMBIENT AIR TEMPERATURE ALARM HIGH — TAH 1404
SUBSTATION NO. 1 CONTROL ROOM AMBIENT AIR HUMIDITY INDICATOR — AI 1405
SUBSTATION NO. 1 CONTROL ROOM AMBIENT AIR HUMIDITY ANALYSIS ALARM HIGH — AH 1405
SUBSTATION NO. 1 HYDROGEN CONCENTRATION ANALYSIS FAIL ALARM — YA 1401
SUBSTATION NO. 1 HYDROGEN CONCENTRATION ANALYSIS INDICATOR — AI 1401
SUBSTATION NO. 1 HYDROGEN CONCENTRATION ANALYSIS ALARM HIGH — AAH 1401
SUBSTATION NO. 1 HYDROGEN CONCENTRATION ANALYSIS ALARM HIGH-HIGH — AAHH 1401
SUBSTATION NO. 1 HYDROGEN CONCENTRATION HIGH AUXILIARY RELAY STATUS — YY 1401
FACP FIRE ALARM STATUS — YA FACP
ACU NO. 1 COMMON FAIL STATUS ALARM — YA ACU1C
ACU NO. 1 FILTER CLOG STATUS ALARM — YA ACU1A
ACU NO. 1 WATER DETECTION STATUS ALARM — YA ACU1D
ACU NO. 1 SMOKE DETECTION STATUS ALARM — YA ACU1B
ACU NO. 1 SUPPLY DUCT PRESSURE INDICATOR — PI 1415
ACU NO. 1 AIR SUPPLY STATUS INDICATOR — YI 1415
ACU NO. 2 COMMON FAIL STATUS ALARM — YA ACU2C
ACU NO. 2 FILTER CLOG STATUS ALARM — YA ACU2A
ACU NO. 2 WATER DETECTION STATUS ALARM — YA ACU2D
ACU NO. 2 SMOKE DETECTION STATUS ALARM — YA ACU2B
ACU NO. 2 SUPPLY DUCT PRESSURE INDICATOR — PI 1425
ACU NO. 2 AIR SUPPLY STATUS INDICATOR — YI 1425
INTERNAL AIR TEMPERATURE NO. 1 — TI 1406
INTERNAL AIR TEMPERATURE NO. 1 — TAL 1406
INTERNAL AIR TEMPERATURE NO. 1 — TAH 1406
INTERNAL AIR TEMPERATURE NO. 2 — TI 1407
INTERNAL AIR TEMPERATURE NO.2 — TAL 1407
INTERNAL AIR TEMPERATURE NO. 2 — TAH 1407

SUBSTATION NO. 1 ELECTRICAL EQUIPMENT SPACE AMBIENT AIR TEMPERATURE — TIT 1402
SUBSTATION NO. 1 ELECTRICAL EQUIPMENT SPACE AMBIENT AIR HUMIDITY — AIT 1403
SUBSTATION NO. 1 CONTROL EQUIPMENT SPACE AMBIENT AIR TEMPERATURE — TIT 1404
SUBSTATION NO. 1 CONTROL EQUIPMENT SPACE AMBIENT AIR HUMIDITY — AIT 1405
SUBSTATION NO. 1 HYDROGEN CONCENTRATION ANALYSIS FAIL ALARM
SUBSTATION NO. 1 HYDROGEN CONCENTRATION ANALYSIS — AE 1401 H2 — AITC 1401 H2 — SUBSTATION NO. 1 HYDROGEN CONCENTRATION HIGH
SUBSTATION COMMON ALARM
SUBSTATION NO. 1 HYDROGEN CONCENTRATION LEVEL ALARM
FIRE ALARM STATUS
AIR CONDITIONING UNIT NO. 1 COMMON FAIL STATUS
AIR CONDITIONING UNIT NO. 1 FILTER CLOG STATUS
AIR CONDITIONING UNIT NO. 1 WATER DETECTION STATUS
AIR CONDITIONING UNIT NO. 1 SMOKE DETECTION STATUS
AIR CONDITIONING UNIT NO. 1 SUPPLY DUCT PRESSURE
AIR CONDITIONING UNIT NO. 2 COMMON FAIL STATUS
AIR CONDITIONING UNIT NO. 2 FILTER CLOG STATUS
AIR CONDITIONING UNIT NO. 2 WATER DETECTION STATUS
AIR CONDITIONING UNIT NO. 2 SMOKE DETECTION STATUS
AIR CONDITIONING UNIT NO. 2 SUPPLY DUCT PRESSURE
INTERNAL AIR TEMPERATURE NO. 1
INTERNAL AIR TEMPERATURE NO. 2

SUPPLY AIR TO AIR DISTRIBUTION DUCTWORK AND AIR DEVICES

SUPPLY DUCTWORK — SUPPLY AIR — PIT 1415 — RETURN AIR

YA ACU1A FILTER CLOG **
YA ACU1B SMOKE DETECTION **
YA ACU1C COMMON FAIL **
YA ACU1D WATER DETECTION **
① "FACP" ** AUTOMATIC SHUT-OFF

SUPPLY AIR TO AIR DISTRIBUTION DUCTWORK AND AIR DEVICES

SUPPLY DUCTWORK — SUPPLY AIR — PIT 1425 — RETURN AIR

YA ACU2A FILTER CLOG **
YA ACU2B SMOKE DETECTION **
YA ACU2C COMMON FAIL **
YA ACU2D WATER DETECTION **
DATA COMMUNICATION LINK
① "FACP" ** AUTOMATIC SHUT-OFF

"SUB1-MCP-001"
TIT 1406
TIT 1407

SUBSTATION NO. 1 HYDROGEN CONCENTRATION HIGH — I

NORTH DOOR INTERIOR COMMON ALARM BEACON — YL SUB1-YL-001
NORTH DOOR EXTERIOR COMMON ALARM BEACON — YL SUB1-YL-002
SOUTH DOOR EXTERIOR COMMON ALARM BEACON — YL SUB1-YL-003
MECHANICAL SPACE INTERIOR COMMON ALARM BEACON — YL SUB1-YL-004
MECHANICAL SPACE EXTERIOR COMMON ALARM BEACON — YL SUB1-YL-005
CONTROL SPACE INTERIOR COMMON ALARM BEACON — YL SUB1-YL-006
CONTROL SPACE EXTERIOR COMMON ALARM BEACON — YL SUB1-YL-007

SCRUBBER NO. 1 OUTSIDE AIR DAMPER FULLY OPEN COMMAND
SCRUBBER NO. 2 OUTSIDE AIR DAMPER FULLY OPEN COMMAND

B [SUB1-I-006]
A [SUB1-I-006]

AIR CONDITIONING UNIT NO. 1
SUB1-ACU-001

AIR CONDITIONING UNIT NO. 2
SUB1-ACU-002

KEY NOTES:

① FIRE ALARM CONTROL PANEL ("FACP"). REFER TO PLANS AND SPECIFICATIONS.

BAR LENGTH ON ORIGINAL DRAWING EQUALS ONE INCH, ADJUST SCALE ACCORDINGLY.

REUSE OF DOCUMENTS

This document, and the designs incorporated herein, is an instrument of professional service that has been developed, designed and prepared by Harutunian Engineering, Inc., and is not to be used, in whole or in part, for any other project without giving written notice to Harutunian Engineering, Inc.

NO.	DATE:	DESCRIPTION

HARUTUNIAN ENGINEERING INCORPORATED
TEXAS FIRM REGISTRATION NUMBER F-2408
ENGINEERING AND ENVIRONMENTAL CONSULTANTS
8100 CROSS PARK DRIVE
AUSTIN, TEXAS 78754

STATE OF TEXAS — ANNE H. HARUTUNIAN 115716 — REGISTERED PROFESSIONAL ENGINEER — 10/7/2019

DESIGNED BY:	HEI
CHECKED BY:	HEI
APPROVED BY:	HEI
SUBMITTAL DATE:	OCTOBER 2019
SCALE:	AS SHOWN

SOUTH AUSTIN REGIONAL WASTEWATER TREATMENT PLANT
ELECTRICAL SUBSTATION NO. 1 REPLACEMENT PROJECT
CIP I.D.# 3333.032

SUBSTATION NO. 1 HVAC PROCESS AND INSTRUMENTATION DIAGRAM – PROPOSED (SHEET 1 OF 2)

PROJECT NO: 2014-300 | SHT. 680 OF 866 | DWG NO. SUB1-I-005

DISTRIBUTED CONTROL SYSTEM

SCRUBBER NO. 1 MOTOR ON STATUS	SCRUBBER NO. 1 OVERLOAD AUXILIARY RELAY STATUS	SCRUBBER NO. 1 OUTSIDE AIR DAMPER POSITION SETPOINT	SCRUBBER NO. 1 OUTSIDE AIR DAMPER POSITION FEEDBACK	SCRUBBER NO. 1 OUTSIDE AIR DAMPER POSITION OPEN	SCRUBBER NO. 1 OUTSIDE AIR DAMPER POSITION CLOSED	SCRUBBER NO. 1 OUTSIDE AIR FLOW INDICATOR	SCRUBBER NO. 1 OUTSIDE AIR FLOW FAIL ALARM	SCRUBBER NO. 1 OUTSIDE AMBIENT AIR TEMPERATURE INDICATOR	SCRUBBER NO. 1 PRE-FILTER AIR PRESSURE DIFFERENTIAL INDICATOR	SCRUBBER NO. 1 FINAL-FILTER AIR PRESSURE DIFFERENTIAL INDICATOR
YZ MSF1-A	YZ MSF1-B	YZ AVD101-A	YZ AVD101-B	YZ AVD101-C	YZ AVD101-D	FI 1411	YA 1411	TI 1412	PDI 1413	PDI 1414

SCRUBBER NO. 2 MOTOR ON STATUS	SCRUBBER NO. 2 OVERLOAD AUXILIARY RELAY STATUS	SCRUBBER NO. 2 OUTSIDE AIR DAMPER POSITION SETPOINT	SCRUBBER NO. 2 OUTSIDE AIR DAMPER POSITION FEEDBACK	SCRUBBER NO. 2 OUTSIDE AIR DAMPER POSITION OPEN	SCRUBBER NO. 2 OUTSIDE AIR DAMPER POSITION CLOSED	SCRUBBER NO. 2 OUTSIDE AIR FLOW INDICATOR	SCRUBBER NO. 2 OUTSIDE AIR FLOW FAIL ALARM	SCRUBBER NO. 2 OUTSIDE AMBIENT AIR TEMPERATURE INDICATOR	SCRUBBER NO. 2 PRE-FILTER AIR PRESSURE DIFFERENTIAL INDICATOR	SCRUBBER NO. 2 FINAL-FILTER AIR PRESSURE DIFFERENTIAL INDICATOR
YZ MSF2-A	YZ MSF2-B	YZ AVD201-A	YZ AVD201-B	YZ AVD201-C	YZ AVD201-D	FI 1421	YA 1421	TI 1422	PDI 1423	PDI 1424

"SUB1-MCP-001"

"SUB1-PLC-001"

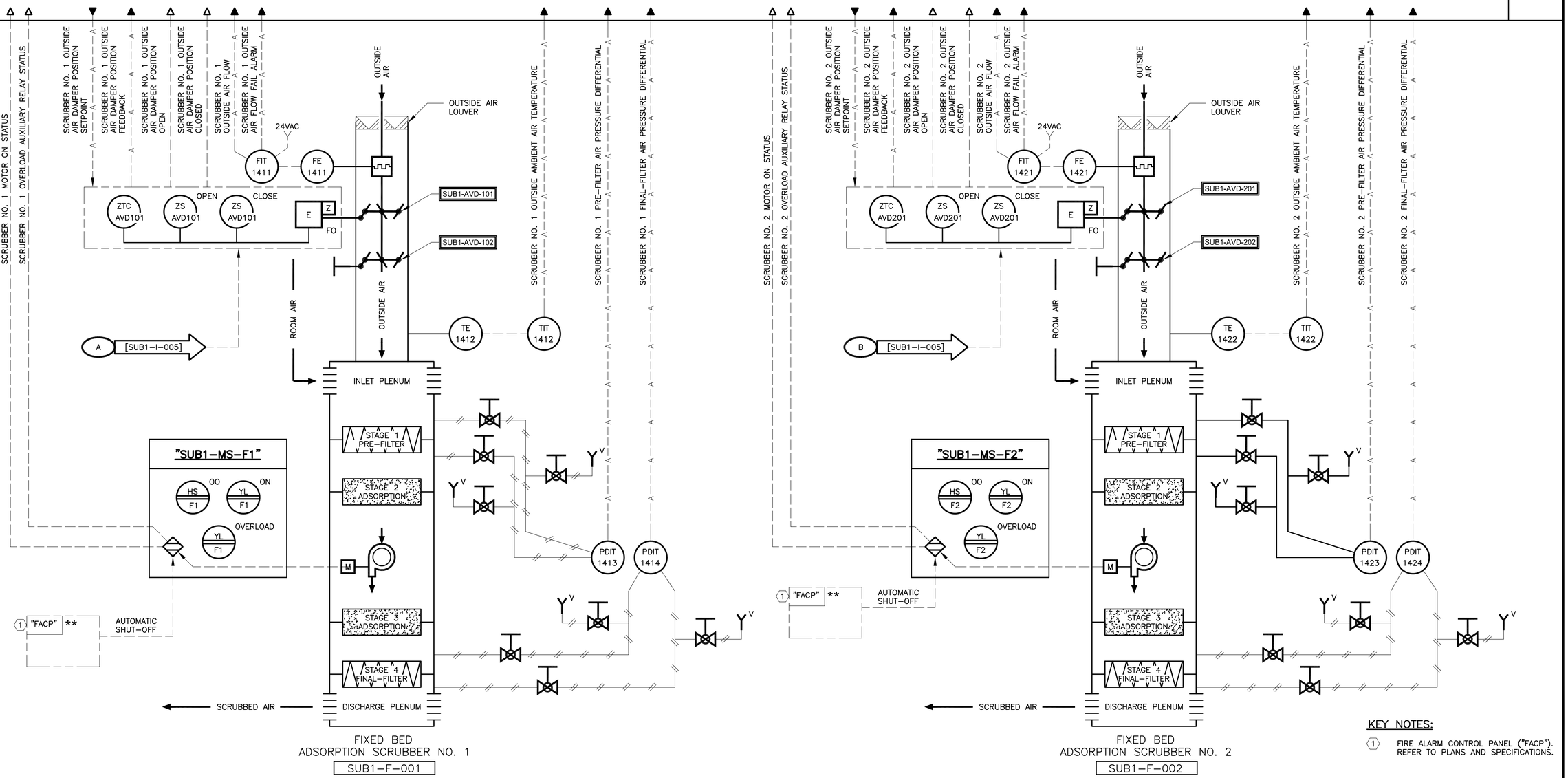

FIXED BED
ADSORPTION SCRUBBER NO. 1
SUB1-F-001

FIXED BED
ADSORPTION SCRUBBER NO. 2
SUB1-F-002

KEY NOTES:

1. FIRE ALARM CONTROL PANEL ("FACP"). REFER TO PLANS AND SPECIFICATIONS.

BAR LENGTH ON ORIGINAL DRAWING EQUALS ONE INCH, ADJUST SCALE ACCORDINGLY.

REUSE OF DOCUMENTS

This document, and the designs incorporated herein, is an instrument of professional service that has been developed, designed and prepared by Harutunian Engineering, Inc., and is not to be used, in whole or in part, for any other project without giving written notice to Harutunian Engineering, Inc.

NO.	DATE:	DESCRIPTION

HARUTUNIAN ENGINEERING INCORPORATED

TEXAS FIRM REGISTRATION NUMBER F-2408

ENGINEERING AND ENVIRONMENTAL CONSULTANTS
8100 CROSS PARK DRIVE
AUSTIN, TEXAS 78754

STATE OF TEXAS
ANNE H. HARUTUNIAN
115716
REGISTERED
PROFESSIONAL ENGINEER
10/7/2019

DESIGNED BY:	HEI
CHECKED BY:	HEI
APPROVED BY:	HEI
SUBMITTAL DATE:	OCTOBER 2019
SCALE:	AS SHOWN

SOUTH AUSTIN REGIONAL WASTEWATER TREATMENT PLANT
ELECTRICAL SUBSTATION NO. 1 REPLACEMENT PROJECT
CIP I.D.# 3333.032

SUBSTATION NO. 1 HVAC PROCESS AND INSTRUMENTATION DIAGRAM – PROPOSED (SHEET 2 OF 2)

PROJECT NO: 2014-300 | SHT. 681 OF 866 | DWG NO. SUB1-I-006

KEY NOTES:

1. THE IDENTIFICATION MARK SHOWN NEAR THE EQUIPMENT IS INTENDED ONLY FOR CROSS REFERENCING THE ENTRIES MADE IN THE NAMEPLATE AND EQUIPMENT SCHEDULES. REFER TO SCHEDULE ON THIS DRAWING FOR ADDITIONAL INFORMATION.
2. NUMBER IN CIRCLE CORRESPONDS TO NUMBERS ON CONTROL PANEL ELEVATIONS. REFER TO SCHEDULE ON THIS DRAWING FOR ADDITIONAL INFORMATION.
3. SECTION NUMBERS SHOWN FOR REFERENCE ONLY.
4. REINFORCED CONCRETE HOUSEKEEPING PAD. REFER TO INDOOR ELECTRICAL EQUIPMENT PAD INSTALLATION DETAIL 4 ON DRAWING NO. [TD-E-010].
5. CONTRACTOR TO FURNISH AND INSTALL A FOLDING SHELF ON EXTERIOR SIDE OF DOOR PER SPECIFICATIONS. CONTRACTOR SHALL PROVIDE ADDITIONAL HARDWARE, AS NECESSARY, TO PROPERLY SECURE FOLDING SHELF TO DOOR. COORDINATE WITH MANUFACTURER PRIOR TO INSTALLATION.
6. PROTECTIVE RELAY COMMUNICATION PORT LOCATED ON FACE OF CONTROL PANEL.

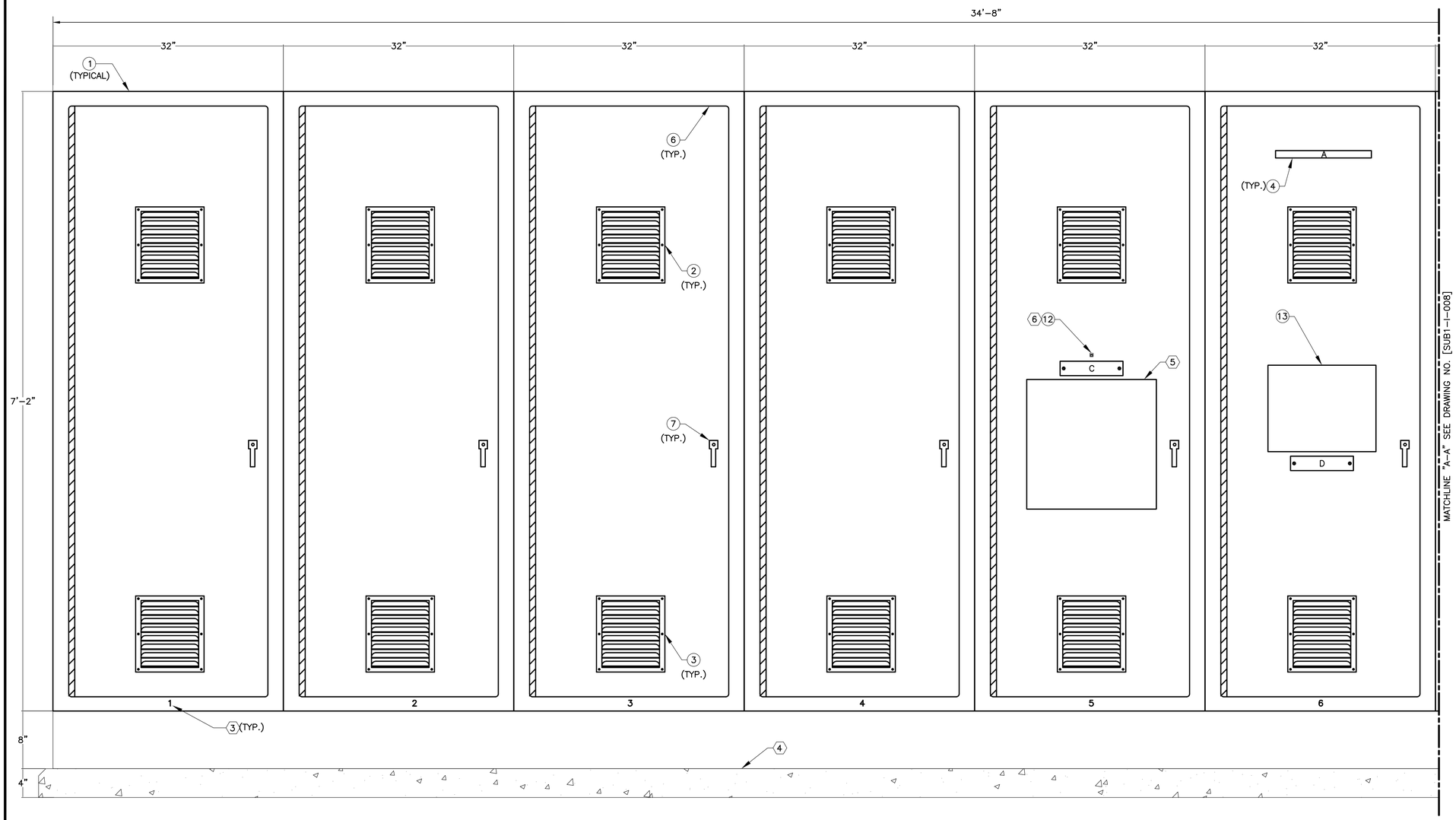

MAIN CONTROL PANEL "SUB1-MCP-001" FRONT ELEVATION

(1)

MAIN CONTROL PANEL NAMEPLATE SCHEDULE

ID MARK	LINE NO.	LEGEND PLATE INSCRIPTION	LETTER SIZE (MINIMUM)
A	FIRST	SUB1-MCP-001	1/2"
B	FIRST	SUB1-OIU-002	1/4"
C	FIRST	SUB1-COM-001	1/4"
D	FIRST	SUB1-OIU-001	1/4"

(2)

MAIN CONTROL PANEL EQUIPMENT SCHEDULE

MARK	DESCRIPTION
(1)	2'-8" WIDE X 2'-8" DEEP X 7-6" TALL, FREE STANDING INDIVIDUAL MODULAR CABINET SECTION, QUANTITY AS REQUIRED. REFER TO DRAWINGS AND SPECIFICATIONS.
(2)	10" HIGH X 9" WIDE UPPPER FAN & VENTILATION PLATE FINISHED TO MATCH PANEL.
(3)	10" HIGH X 9" WIDE LOWER VENTILATION PLATE FINISHED TO MATCH PANEL.
(4)	3-PLY, BLACK-WHITE-BLACK PHENOLIC NAMEPLATE. LETTERS BESIDE NAMEPLATE CORRESPOND TO IDENTIFICATION MARK IN NAMEPLATE SCHEDULE.
(5)	OPERATOR INTERFACE UNIT (TYPE II), DISPLAY
(6)	CONTROL PANEL DOOR
(7)	CONTROL PANEL DOOR HANDLE
(8)	OPERATOR INTERFACE UNIT (TYPE II), DISPLAY MOUNT
(9)	OPERATOR INTERFACE UNIT (TYPE II), CABLE GLAND
(10)	OPERATOR INTERFACE UNIT (TYPE II), COMPUTER
(11)	OPERATOR INTERFACE UNIT (TYPE II), KEYBOARD ASSEMBLY
(12)	COMMUNICATION INTERFACE CONNECTION
(13)	OPERATOR INTERFACE UNIT (TYPE I)

BAR LENGTH ON ORIGINAL DRAWING EQUALS ONE INCH, ADJUST SCALE ACCORDINGLY.

REUSE OF DOCUMENTS

This document, and the designs incorporated herein, is an instrument of professional service that has been developed, designed and prepared by Harutunian Engineering, Inc., and is not to be used, in whole or in part, for any other project without giving written notice to Harutunian Engineering, Inc.

NO.	DATE:	DESCRIPTION

HARUTUNIAN ENGINEERING INCORPORATED

TEXAS FIRM REGISTRATION NUMBER F-2408

ENGINEERING AND ENVIRONMENTAL CONSULTANTS
8100 CROSS PARK DRIVE
AUSTIN, TEXAS 78754

STATE OF TEXAS
SHANT HARUTUNIAN
87735
REGISTERED
PROFESSIONAL ENGINEER
10/7/2019

DESIGNED BY:	HEI
CHECKED BY:	HEI
APPROVED BY:	HEI
SUBMITTAL DATE:	OCTOBER 2019
SCALE:	AS SHOWN

SOUTH AUSTIN REGIONAL WASTEWATER TREATMENT PLANT
ELECTRICAL SUBSTATION NO. 1 REPLACEMENT PROJECT
CIP I.D.# 3333.032

SUBSTATION NO. 1 MAIN CONTROL PANEL SUB1-MCP-001 FRONT ELEVATION PROPOSED (SHEET 1 OF 2)

PROJECT NO: 2014-300 | SHT. 682 OF 866 | DWG NO. SUB1-I-007

KEY NOTES (CONTINUED):

5. OIU COMPUTER MOUNTED ON THE BACK OF THE DOOR. CONTROL PANEL MANUFACTURER TO FURNISH AND INSTALL CONTROL PANEL MANUFACTURERS STANDARD SUPPORT CHANNELS FOR MOUNTING COMPUTER. SHOWN IN THIS VIEW FOR CLARITY.
6. VESA BRACKET MOUNTED TO FACE OF CONTROL PANEL DOOR. SHOWN IN THIS VIEW FOR CLARITY.
7. FURNISH AND INSTALL KEYBOARD AT 38" ABOVE FINISHED FLOOR.
8. FURNISH AND INSTALL RACK MOUNTED COMMUNICATION EQUIPMENT INCLUDING PATCH PANELS AND ETHERNET SWITCHES IN THIS SECTION.
9. CONTRACTOR TO FURNISH AND INSTALL A FOLDING SHELF ON INTERIOR SIDE OF DOOR PER SPECIFICATIONS. CONTRACTOR SHALL PROVIDE ADDITIONAL HARDWARE, AS NECESSARY, TO PROPERLY SECURE FOLDING SHELF TO DOOR. COORDINATE WITH MANUFACTURER PRIOR TO INSTALLATION.

KEY NOTES:

1. THE IDENTIFICATION MARK SHOWN NEAR THE EQUIPMENT IS INTENDED ONLY FOR CROSS REFERENCING THE ENTRIES MADE IN THE NAMEPLATE AND EQUIPMENT SCHEDULES. REFER TO SCHEDULE ON DRAWING [SUB1-I-007] FOR ADDITIONAL INFORMATION.
2. NUMBER IN CIRCLE CORRESPONDS TO NUMBERS ON CONTROL PANEL ELEVATIONS. REFER TO SCHEDULE ON DRAWING [SUB1-I-007] FOR ADDITIONAL INFORMATION.
3. SECTION NUMBERS SHOWN FOR REFERENCE ONLY.
4. REINFORCED CONCRETE HOUSEKEEPING PAD. REFER TO INDOOR ELECTRICAL EQUIPMENT PAD INSTALLATION DETAIL 4 ON DRAWING NO. [TD-E-010].

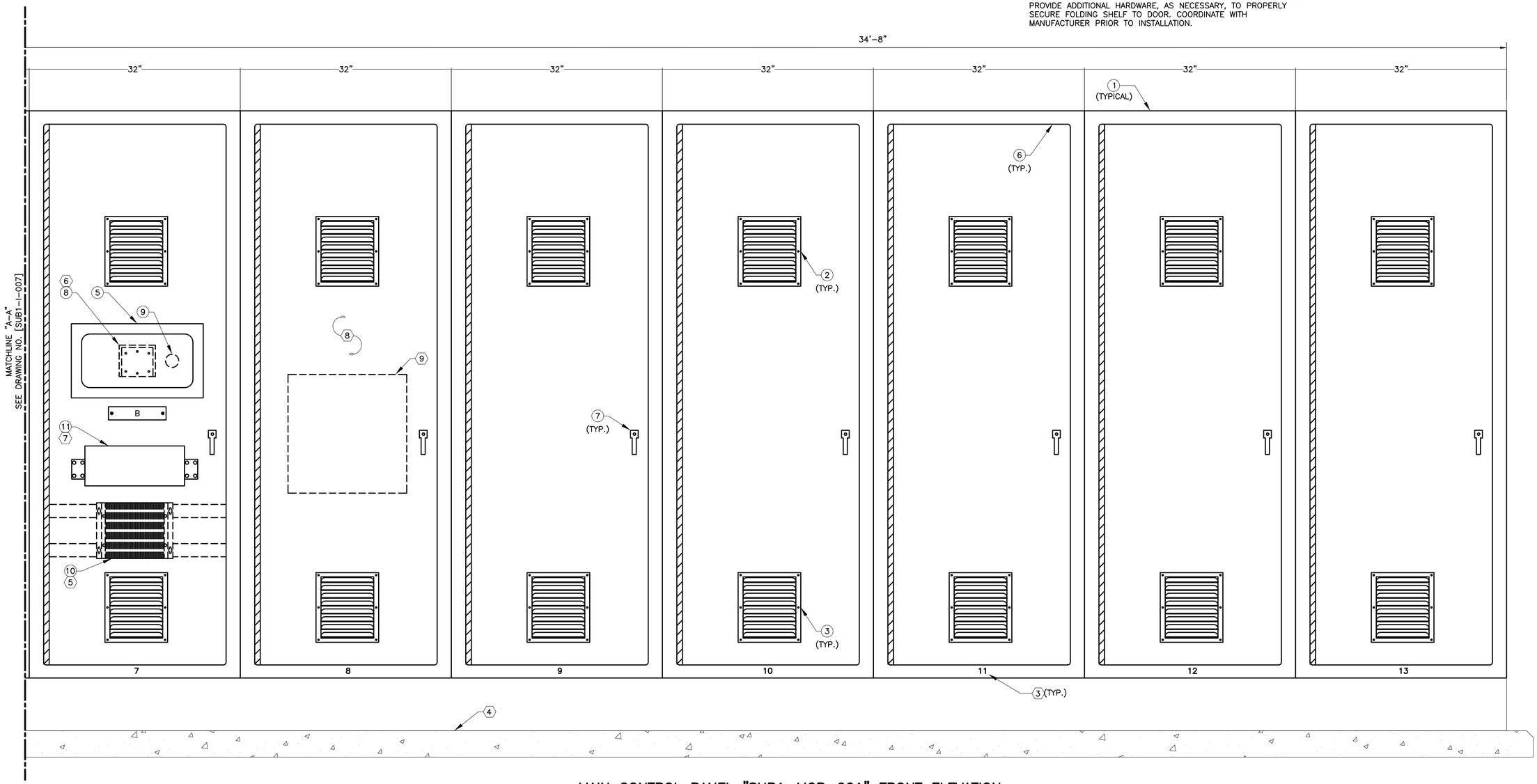

MAIN CONTROL PANEL "SUB1-MCP-001" FRONT ELEVATION

BAR LENGTH ON ORIGINAL DRAWING EQUALS ONE INCH, ADJUST SCALE ACCORDINGLY.

REUSE OF DOCUMENTS

This document, and the designs incorporated herein, is an instrument of professional service that has been developed, designed and prepared by Harutunian Engineering, Inc., and is not to be used, in whole or in part, for any other project without giving written notice to Harutunian Engineering, Inc.

NO.	DATE:	DESCRIPTION

HARUTUNIAN ENGINEERING INCORPORATED

TEXAS FIRM REGISTRATION NUMBER F-2408

ENGINEERING AND ENVIRONMENTAL CONSULTANTS
8100 CROSS PARK DRIVE
AUSTIN, TEXAS 78754

STATE OF TEXAS — SHANT HARUTUNIAN 87735 — REGISTERED PROFESSIONAL ENGINEER — 10/7/2019

DESIGNED BY:	HEI
CHECKED BY:	HEI
APPROVED BY:	HEI
SUBMITTAL DATE:	OCTOBER 2019
SCALE:	AS SHOWN

SOUTH AUSTIN REGIONAL WASTEWATER TREATMENT PLANT
ELECTRICAL SUBSTATION NO. 1 REPLACEMENT PROJECT
CIP I.D.# 3333.032

SUBSTATION NO. 1 MAIN CONTROL PANEL SUB1-MCP-001 FRONT ELEVATION PROPOSED (SHEET 2 OF 2)

PROJECT NO: 2014-300 | SHT. 683 OF 866 | DWG NO. SUB1-I-008

12470V SWITCHGEAR "SUB2-SWGR-1L" (1)

15kV, 3ø, 3W, 2000A TIN PLATED COPPER BUS, RATED 1000MVA

"PT-SWGR1L-1" 120V 12470V

"PT-SWGR1L-2" 120V 12470V

LA "LA-SWGR1L"

S.C. "CAP-SWGR1L"

"CT-SWGR1L-3" 2000-1000/5 STB 3 DR

"CT-SWGR1L-2" 2000-1000/5 STB 3 DR

LUGS

"CT-SWGR1L-1" 50/5 STB 1

GROUND BUS

F1-SUB2-1L01
F2-SUB2-1L01

12.47KV INCOMING FEEDER (BY AUSTIN ENERGY)

WHM

WATT-HOUR METER "SUB2-WHM-001"

TRANSFORMER "CPT-XFMR-1L"
37.5kVA 3ø Δ 12470V Y 480/277V

3P-225A

AUTOMATIC TRANSFER SWITCH "SUB2-ATS-001" REFER TO DRAWING NO. [SUB2-E-011].

"CT-1L05-2" 2000/5 STB 3 X1-X5/MR

"VCB-1L05" 1200A 1000MVA 52

CL VCB-1L05 [SUB2-E-016]

TO MAIN CONTROL PANEL "SUB2-DCP-01"

TO SWITCHGEAR "SUB2-SWGR-1R". REFER TO DRAWING NO. [SUB2-E-006].

TO DC POWER DISTRIBUTION PANEL "SUB2-PDP-DC01". REFER TO DRAWING NO. [SUB2-E-011].

TO MAIN CONTROL PANEL "SUB2-DCP-01"

CONTROL POWER CIRCUITRY

PROTECTIVE RELAY "PR-1L05"

DISPLAY RELAY STATUS
METERING POWER FACTOR
METERING REACTIVE POWER
METERING POWER
METERING CURRENT
METERING VOLTAGE

RS PF VAR W A V

- 50/51 INSTANT/TIMED PHASE OVERCURRENT
- 59 OVERVOLTS
- 81O/81U OVER/UNDER FREQUENCY
- 27 UNDERVOLTS
- 47 NEGATIVE SEQUENCE UNDERVOLTS
- 50N/51N INSTANT/TIMED NEUTRAL OVERCURRENT
- 67 DIRECTIONAL OVERCURRENT
- 55 POWER FACTOR
- 25 SYNC CHECK

TRIP 94 74
FAILURE

CONTROL PWR 130VDC
COM PORT
ETHERNET
GROUND

"PT-SWGR1L-3" 120V 12470V

"CT-1L06-1" 2000/5 STB 3 X1-X5/MR

"VCB-1L06" 1200A 1000MVA 52

"CT-1L06-2" 2000/5 STB 3 X1-X5/MR

CL VCB-1L06 [SUB2-E-017]

FROM 12.47KV SWITCHGEAR "SUB2-SWGR-1R". REFER TO DRAWING NO. [SUB2-E-006].

TO MAIN CONTROL PANEL "SUB2-DCP-01"

OVERHEAD BUS DUCT

MATCHLINE "B-B" REFER TO DRAWING NO. [SUB2-E-006]

PROTECTIVE RELAY "PR-1L06-1"

CURRENT METERING
RELAY STATUS DISPLAY

A RS

- 50/51 INSTANT/TIMED PHASE OVERCURRENT (1)
- 50Q/46 INSTANT NEG. SEQUENCE OVERCURRENT (1)
- 51/46 TIMED NEG. SEQUENCE OVERCURRENT (1)
- 50N/51N INSTANT/TIMED NEUTRAL OVERCURRENT
- 87 DIFFERENTIAL OVERCURRENT
- 50/51 INSTANT/TIMED PHASE OVERCURRENT (2)
- 50Q/46 INSTANT NEG. SEQUENCE OVERCURRENT (2)
- 51/46 TIMED NEG. SEQUENCE OVERCURRENT (2)
- 50G/51G INSTANT/TIMED GROUND OVERCURRENT

TRIP 74 94
FAILURE

130VDC CONTROL PWR
COM PORT
ETHERNET
GROUND

CONTROL POWER CIRCUITRY

PROTECTIVE RELAY "PR-1L06-2"

- V VOLTAGE METERING
- VΔ VOLTAGE DIFF. METERING
- øΔ PHASE DIFF. METERING
- FΔ FREQUENCY DIFF. METERING

SYNC OK 25 SYNC CHECK

74 94

SYNC
FAILURE
130VDC CONTROL PWR
GROUND

FROM 12.47KV SWITCHGEAR "SUB2-SWGR-1R". REFER TO DRAWING NO. [SUB2-E-006].

MATCHLINE "A-A" ON DRAWING NO. [SUB2-E-002].

GENERAL NOTES:

1. ALL ELECTRICAL EQUIPMENT, WIRING, CONDUITS, ETC., SHOWN ON THIS DRAWING ARE EXISTING UNLESS NOTED OTHERWISE.
2. THE INFORMATION CONTAINED ON THIS DRAWING WAS OBTAINED FROM INFORMATION AND DRAWINGS THAT WERE PROVIDED BY THE CITY OF AUSTIN. THIS INFORMATION HAS NOT BEEN FIELD VERIFIED.

KEY NOTES:

(1) THE EXISTING METAL CLAD SWITCHGEAR IS MANUFACTURED BY "CUTLER HAMMER", G/O ITEM NO. "MUX00815-004", AND P/O NO. "5665-61004".

BAR LENGTH ON ORIGINAL DRAWING EQUALS ONE INCH, ADJUST SCALE ACCORDINGLY.

REUSE OF DOCUMENTS

This document, and the designs incorporated herein, is an instrument of professional service that has been developed, designed and prepared by Harutunian Engineering, Inc., and is not to be used, in whole or in part, for any other project without giving written notice to Harutunian Engineering, Inc.

NO.	DATE:	DESCRIPTION

HARUTUNIAN ENGINEERING INCORPORATED

TEXAS FIRM REGISTRATION NUMBER F-2408

ENGINEERING AND ENVIRONMENTAL CONSULTANTS
8100 CROSS PARK DRIVE
AUSTIN, TEXAS 78754

STATE OF TEXAS
SHANT HARUTUNIAN
87735
REGISTERED
PROFESSIONAL ENGINEER
10/7/2019

DESIGNED BY:	HEI
CHECKED BY:	HEI
APPROVED BY:	HEI
SUBMITTAL DATE:	OCTOBER 2019
SCALE:	AS SHOWN

SOUTH AUSTIN REGIONAL WASTEWATER TREATMENT PLANT
ELECTRICAL SUBSTATION NO. 1 REPLACEMENT PROJECT
CIP I.D.# 3333.032

ELECTRICAL SUBSTATION NO. 2 DETAILED ONE-LINE DIAGRAM EXISTING (SHEET 1 OF 11)

PROJECT NO: 2014-300 | SHT. 684 OF 866 | DWG NO. SUB2-E-001

12470V SWITCHGEAR "SUB2-SWGR-1L" (1)

15kV, 3ø, 3W, 2000A TIN PLATED COPPER BUS, RATED 1000MVA

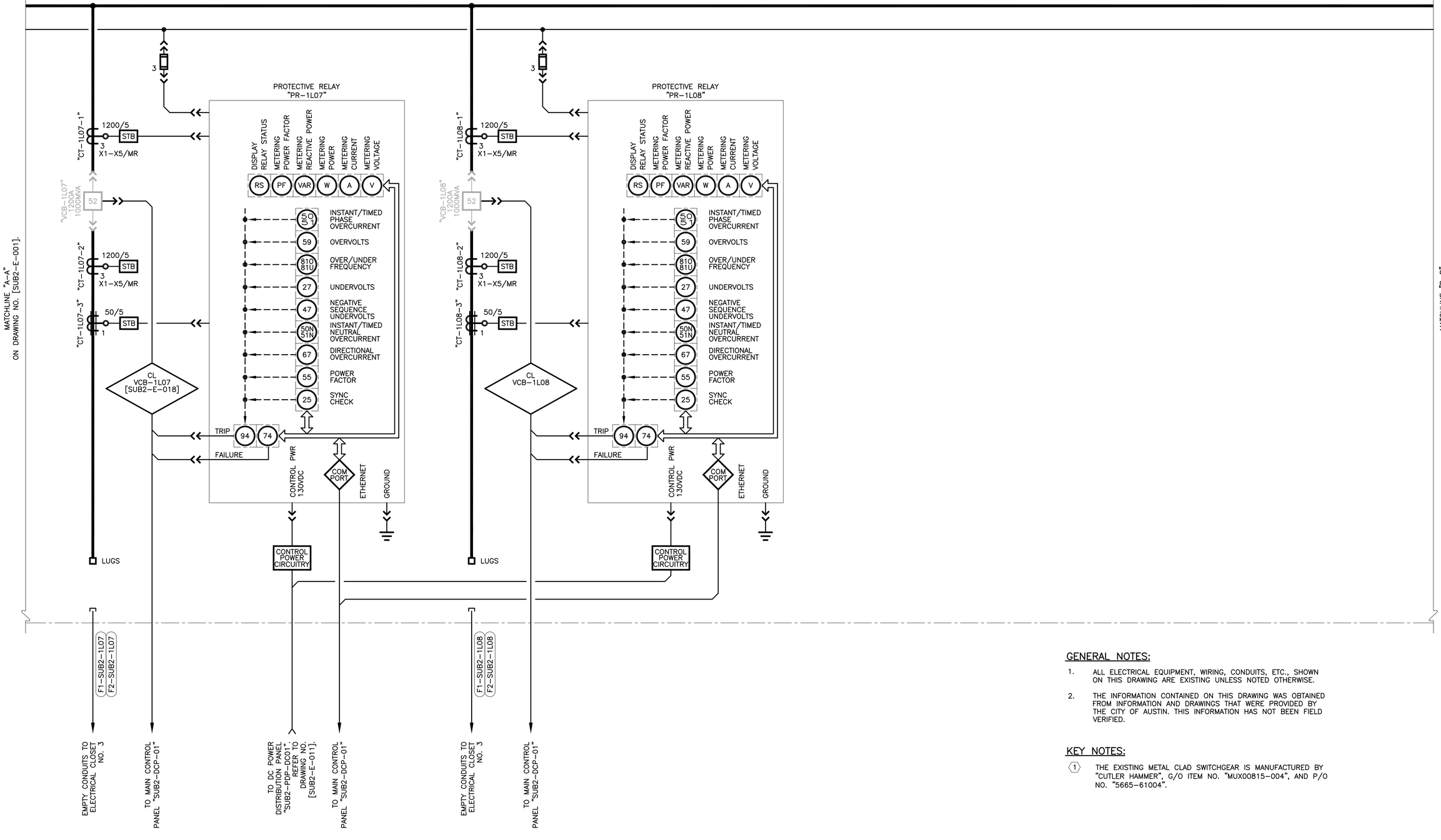

GENERAL NOTES:

1. ALL ELECTRICAL EQUIPMENT, WIRING, CONDUITS, ETC., SHOWN ON THIS DRAWING ARE EXISTING UNLESS NOTED OTHERWISE.
2. THE INFORMATION CONTAINED ON THIS DRAWING WAS OBTAINED FROM INFORMATION AND DRAWINGS THAT WERE PROVIDED BY THE CITY OF AUSTIN. THIS INFORMATION HAS NOT BEEN FIELD VERIFIED.

KEY NOTES:

(1) THE EXISTING METAL CLAD SWITCHGEAR IS MANUFACTURED BY "CUTLER HAMMER", G/O ITEM NO. "MUX00815-004", AND P/O NO. "5665-61004".

BAR LENGTH ON ORIGINAL DRAWING EQUALS ONE INCH, ADJUST SCALE ACCORDINGLY.

REUSE OF DOCUMENTS

This document, and the designs incorporated herein, is an instrument of professional service that has been developed, designed and prepared by Harutunian Engineering, Inc., and is not to be used, in whole or in part, for any other project without giving written notice to Harutunian Engineering, Inc.

NO.	DATE:	DESCRIPTION

HARUTUNIAN ENGINEERING INCORPORATED

TEXAS FIRM REGISTRATION NUMBER F-2408

ENGINEERING AND ENVIRONMENTAL CONSULTANTS
8100 CROSS PARK DRIVE
AUSTIN, TEXAS 78754

STATE OF TEXAS
SHANT HARUTUNIAN
87735
REGISTERED
PROFESSIONAL ENGINEER
10/7/2019

DESIGNED BY:	HEI
CHECKED BY:	HEI
APPROVED BY:	HEI
SUBMITTAL DATE:	OCTOBER 2019
SCALE:	AS SHOWN

SOUTH AUSTIN REGIONAL WASTEWATER TREATMENT PLANT
ELECTRICAL SUBSTATION NO. 1 REPLACEMENT PROJECT
CIP I.D.# 3333.032

ELECTRICAL SUBSTATION NO. 2 DETAILED ONE-LINE DIAGRAM EXISTING (SHEET 2 OF 11)

PROJECT NO: 2014-300 | SHT. 685 OF 866 | DWG NO. SUB2-E-002

12470V SWITCHGEAR "SUB2-SWGR-1L" (1)

15kV, 3ø, 3W, 2000A TIN PLATED COPPER BUS, RATED 1000MVA

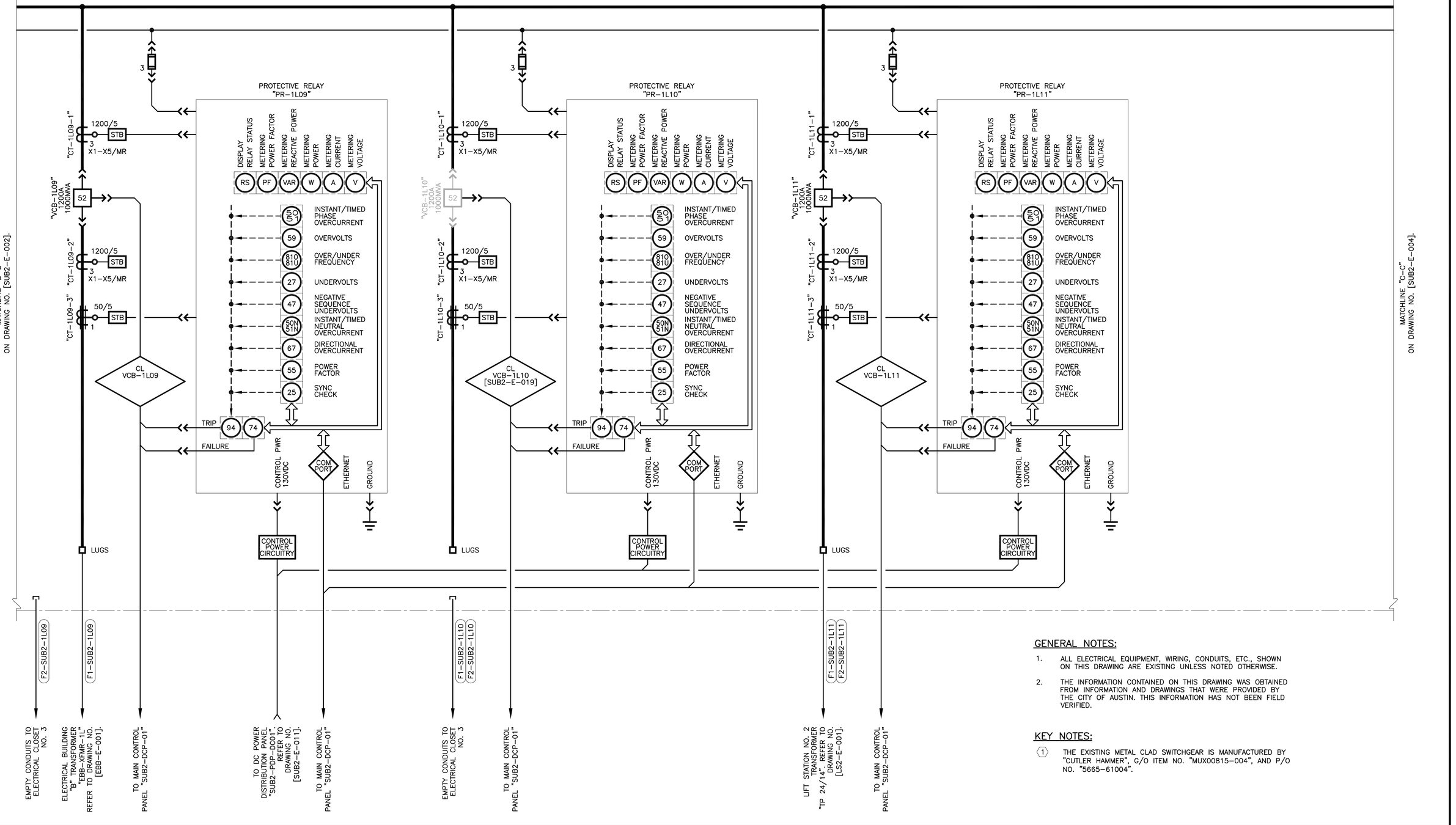

GENERAL NOTES:

1. ALL ELECTRICAL EQUIPMENT, WIRING, CONDUITS, ETC., SHOWN ON THIS DRAWING ARE EXISTING UNLESS NOTED OTHERWISE.
2. THE INFORMATION CONTAINED ON THIS DRAWING WAS OBTAINED FROM INFORMATION AND DRAWINGS THAT WERE PROVIDED BY THE CITY OF AUSTIN. THIS INFORMATION HAS NOT BEEN FIELD VERIFIED.

KEY NOTES:

(1) THE EXISTING METAL CLAD SWITCHGEAR IS MANUFACTURED BY "CUTLER HAMMER", G/O ITEM NO. "MUX00815-004", AND P/O NO. "5665-61004".

BAR LENGTH ON ORIGINAL DRAWING EQUALS ONE INCH, ADJUST SCALE ACCORDINGLY.

REUSE OF DOCUMENTS

This document, and the designs incorporated herein, is an instrument of professional service that has been developed, designed and prepared by Harutunian Engineering, Inc., and is not to be used, in whole or in part, for any other project without giving written notice to Harutunian Engineering, Inc.

NO.	DATE:	DESCRIPTION

HARUTUNIAN ENGINEERING INCORPORATED

TEXAS FIRM REGISTRATION NUMBER F-2408

ENGINEERING AND ENVIRONMENTAL CONSULTANTS
8100 CROSS PARK DRIVE
AUSTIN, TEXAS 78754

STATE OF TEXAS
SHANT HARUTUNIAN
87735
REGISTERED
PROFESSIONAL ENGINEER
10/7/2019

DESIGNED BY:	HEI
CHECKED BY:	HEI
APPROVED BY:	HEI
SUBMITTAL DATE:	OCTOBER 2019
SCALE:	AS SHOWN

SOUTH AUSTIN REGIONAL WASTEWATER TREATMENT PLANT
ELECTRICAL SUBSTATION NO. 1 REPLACEMENT PROJECT
CIP I.D.# 3333.032

ELECTRICAL SUBSTATION NO. 2 DETAILED ONE-LINE DIAGRAM EXISTING (SHEET 3 OF 11)

PROJECT NO: 2014-300 | SHT. 686 OF 866 | DWG NO. SUB2-E-003

12470V SWITCHGEAR "SUB2-SWGR-1L" (1)

15kV, 3ø, 3W, 2000A TIN PLATED COPPER BUS, RATED 1000MVA

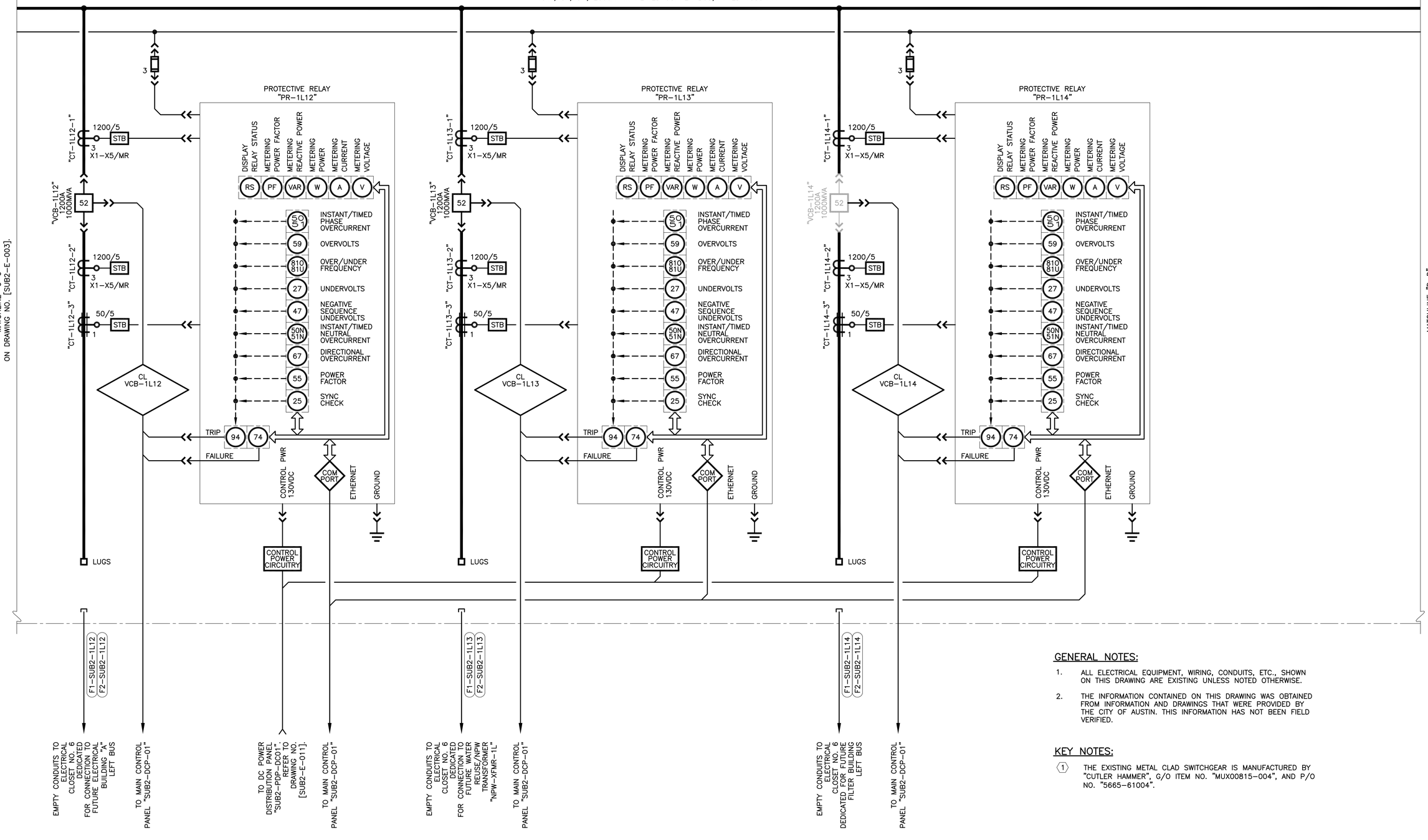

GENERAL NOTES:

1. ALL ELECTRICAL EQUIPMENT, WIRING, CONDUITS, ETC., SHOWN ON THIS DRAWING ARE EXISTING UNLESS NOTED OTHERWISE.
2. THE INFORMATION CONTAINED ON THIS DRAWING WAS OBTAINED FROM INFORMATION AND DRAWINGS THAT WERE PROVIDED BY THE CITY OF AUSTIN. THIS INFORMATION HAS NOT BEEN FIELD VERIFIED.

KEY NOTES:

(1) THE EXISTING METAL CLAD SWITCHGEAR IS MANUFACTURED BY "CUTLER HAMMER", G/O ITEM NO. "MUX00815-004", AND P/O NO. "5665-61004".

BAR LENGTH ON ORIGINAL DRAWING EQUALS ONE INCH, ADJUST SCALE ACCORDINGLY.

REUSE OF DOCUMENTS

This document, and the designs incorporated herein, is an instrument of professional service that has been developed, designed and prepared by Harutunian Engineering, Inc., and is not to be used, in whole or in part, for any other project without giving written notice to Harutunian Engineering, Inc.

NO.	DATE:	DESCRIPTION

HARUTUNIAN ENGINEERING INCORPORATED

TEXAS FIRM REGISTRATION NUMBER F-2408

ENGINEERING AND ENVIRONMENTAL CONSULTANTS
8100 CROSS PARK DRIVE
AUSTIN, TEXAS 78754

STATE OF TEXAS
SHANT HARUTUNIAN
87735
REGISTERED
PROFESSIONAL ENGINEER
10/7/2019

DESIGNED BY:	HEI
CHECKED BY:	HEI
APPROVED BY:	HEI
SUBMITTAL DATE:	OCTOBER 2019
SCALE:	AS SHOWN

SOUTH AUSTIN REGIONAL WASTEWATER TREATMENT PLANT
ELECTRICAL SUBSTATION NO. 1 REPLACEMENT PROJECT
CIP I.D.# 3333.032

ELECTRICAL SUBSTATION NO. 2
DETAILED ONE-LINE DIAGRAM
EXISTING (SHEET 4 OF 11)

PROJECT NO: 2014-300 | SHT. 687 OF 866 | DWG NO. SUB2-E-004

12470V SWITCHGEAR "SUB2-SWGR-1L" (1)

15kV, 3ø, 3W, 2000A TIN PLATED COPPER BUS, RATED 1000MVA

MATCHLINE "D-D" ON DRAWING NO. [SUB2-E-004].

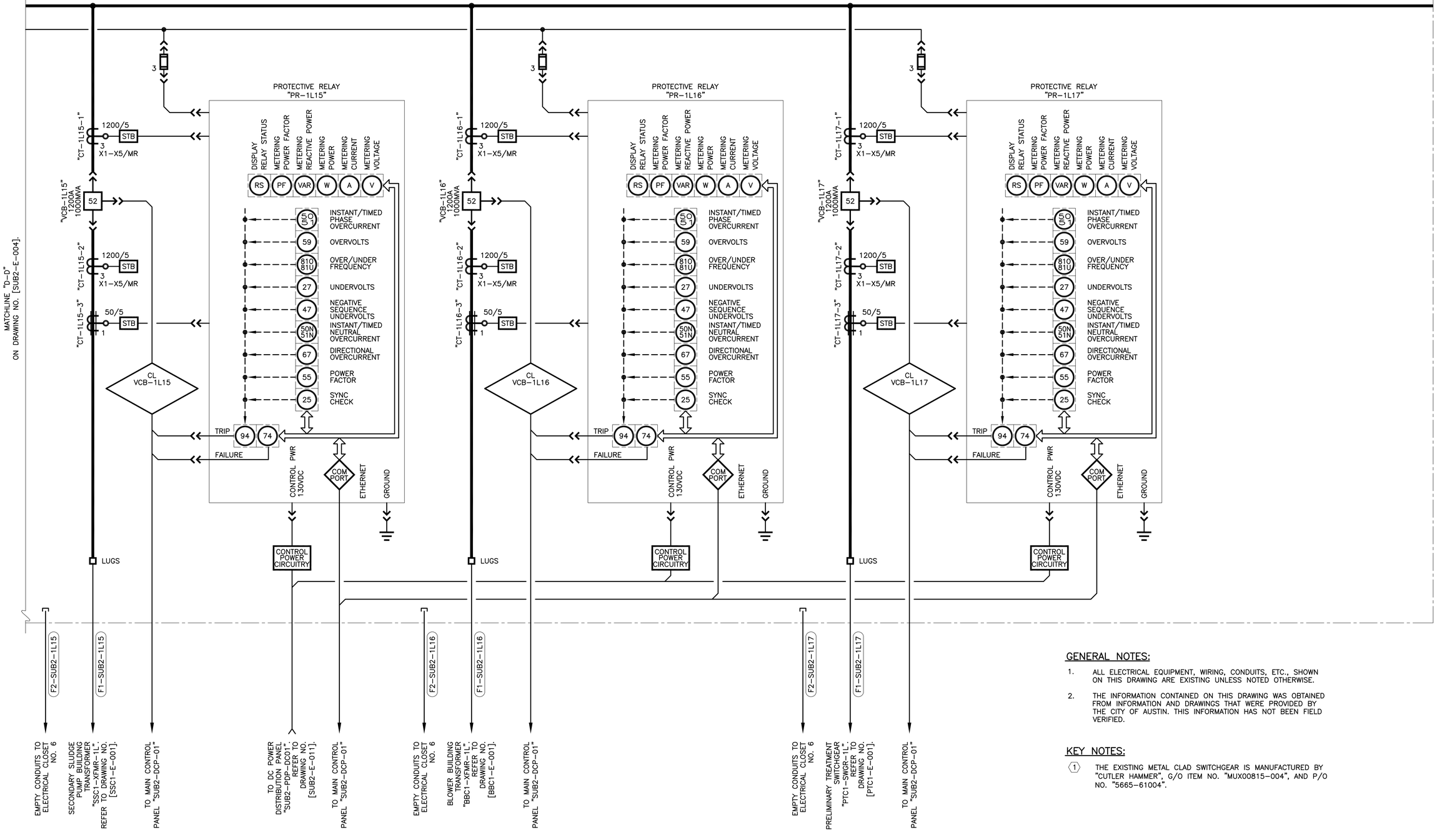

GENERAL NOTES:

1. ALL ELECTRICAL EQUIPMENT, WIRING, CONDUITS, ETC., SHOWN ON THIS DRAWING ARE EXISTING UNLESS NOTED OTHERWISE.
2. THE INFORMATION CONTAINED ON THIS DRAWING WAS OBTAINED FROM INFORMATION AND DRAWINGS THAT WERE PROVIDED BY THE CITY OF AUSTIN. THIS INFORMATION HAS NOT BEEN FIELD VERIFIED.

KEY NOTES:

(1) THE EXISTING METAL CLAD SWITCHGEAR IS MANUFACTURED BY "CUTLER HAMMER", G/O ITEM NO. "MUX00815-004", AND P/O NO. "5665-61004".

BAR LENGTH ON ORIGINAL DRAWING EQUALS ONE INCH, ADJUST SCALE ACCORDINGLY.

REUSE OF DOCUMENTS

This document, and the designs incorporated herein, is an instrument of professional service that has been developed, designed and prepared by Harutunian Engineering, Inc., and is not to be used, in whole or in part, for any other project without giving written notice to Harutunian Engineering, Inc.

NO.	DATE:	DESCRIPTION

HARUTUNIAN ENGINEERING INCORPORATED

TEXAS FIRM REGISTRATION NUMBER F-2408

ENGINEERING AND ENVIRONMENTAL CONSULTANTS
8100 CROSS PARK DRIVE
AUSTIN, TEXAS 78754

STATE OF TEXAS — SHANT HARUTUNIAN 87735 — REGISTERED PROFESSIONAL ENGINEER — 10/7/2019

DESIGNED BY:	HEI
CHECKED BY:	HEI
APPROVED BY:	HEI
SUBMITTAL DATE:	OCTOBER 2019
SCALE:	AS SHOWN

SOUTH AUSTIN REGIONAL WASTEWATER TREATMENT PLANT
ELECTRICAL SUBSTATION NO. 1 REPLACEMENT PROJECT
CIP I.D.# 3333.032

ELECTRICAL SUBSTATION NO. 2 DETAILED ONE-LINE DIAGRAM EXISTING (SHEET 5 OF 11)

PROJECT NO: 2014-300 | SHT. 688 OF 866 | DWG NO. SUB2-E-005

12470V SWITCHGEAR "SUB2-SWGR-1R" (1)

15kV, 3ø, 3W, 2000A TIN PLATED COPPER BUS, RATED 1000MVA

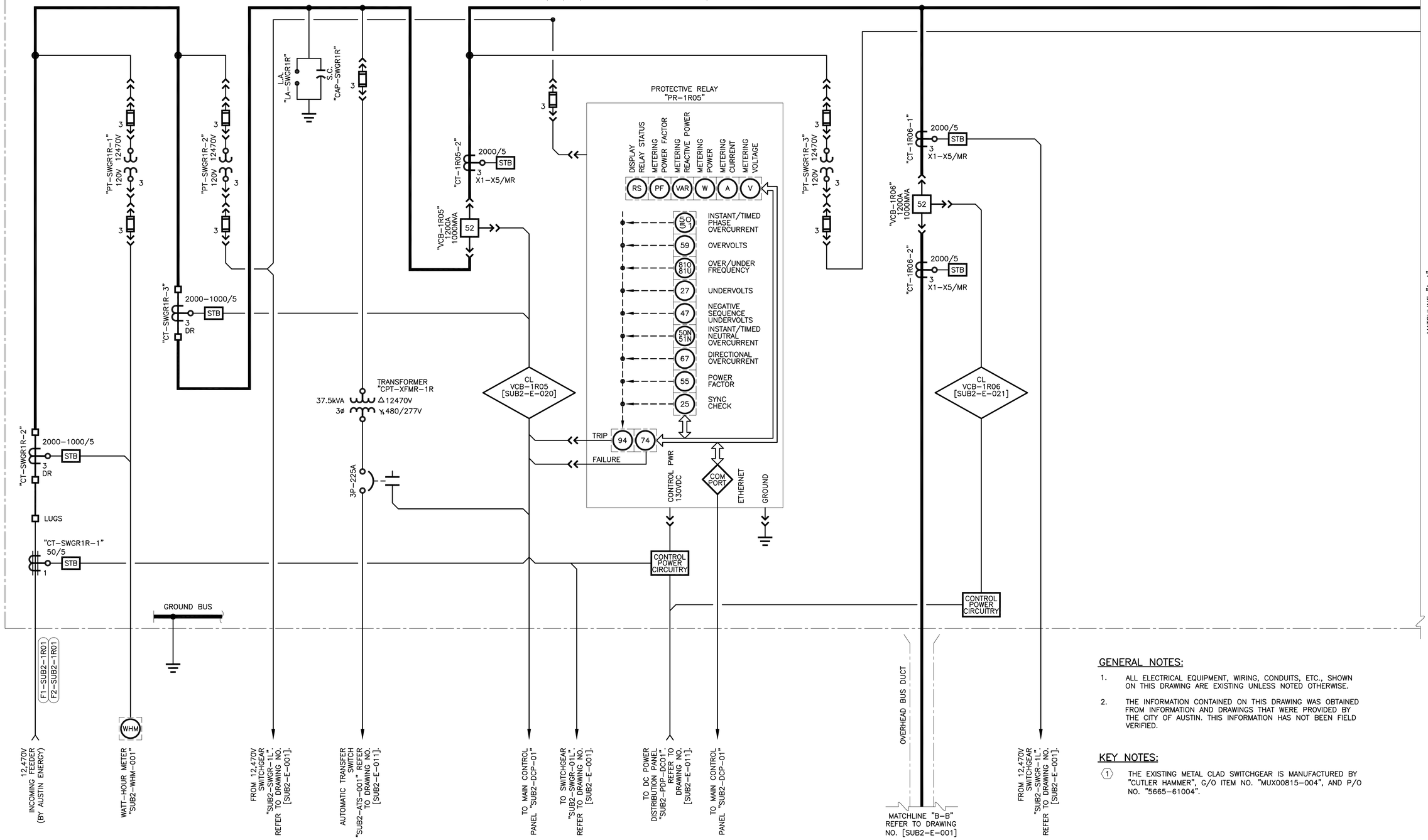

GENERAL NOTES:

1. ALL ELECTRICAL EQUIPMENT, WIRING, CONDUITS, ETC., SHOWN ON THIS DRAWING ARE EXISTING UNLESS NOTED OTHERWISE.
2. THE INFORMATION CONTAINED ON THIS DRAWING WAS OBTAINED FROM INFORMATION AND DRAWINGS THAT WERE PROVIDED BY THE CITY OF AUSTIN. THIS INFORMATION HAS NOT BEEN FIELD VERIFIED.

KEY NOTES:

(1) THE EXISTING METAL CLAD SWITCHGEAR IS MANUFACTURED BY "CUTLER HAMMER", G/O ITEM NO. "MUX00815-004", AND P/O NO. "5665-61004".

BAR LENGTH ON ORIGINAL DRAWING EQUALS ONE INCH, ADJUST SCALE ACCORDINGLY.

REUSE OF DOCUMENTS

This document, and the designs incorporated herein, is an instrument of professional service that has been developed, designed and prepared by Harutunian Engineering, Inc., and is not to be used, in whole or in part, for any other project without giving written notice to Harutunian Engineering, Inc.

NO.	DATE:	DESCRIPTION

HARUTUNIAN ENGINEERING INCORPORATED

TEXAS FIRM REGISTRATION NUMBER F-2408

ENGINEERING AND ENVIRONMENTAL CONSULTANTS
8100 CROSS PARK DRIVE
AUSTIN, TEXAS 78754

STATE OF TEXAS — SHANT HARUTUNIAN 87735 — REGISTERED PROFESSIONAL ENGINEER — 10/7/2019

DESIGNED BY:	HEI
CHECKED BY:	HEI
APPROVED BY:	HEI
SUBMITTAL DATE:	OCTOBER 2019
SCALE:	AS SHOWN

SOUTH AUSTIN REGIONAL WASTEWATER TREATMENT PLANT
ELECTRICAL SUBSTATION NO. 1 REPLACEMENT PROJECT
CIP I.D.# 3333.032

ELECTRICAL SUBSTATION NO. 2 DETAILED ONE-LINE DIAGRAM EXISTING (SHEET 6 OF 11)

PROJECT NO: 2014-300 | SHT. 689 OF 866 | DWG NO. SUB2-E-006

12470V SWITCHGEAR "SUB2-SWGR-1R" (1)

15kV, 3ø, 3W, 2000A TIN PLATED COPPER BUS, RATED 1000MVA

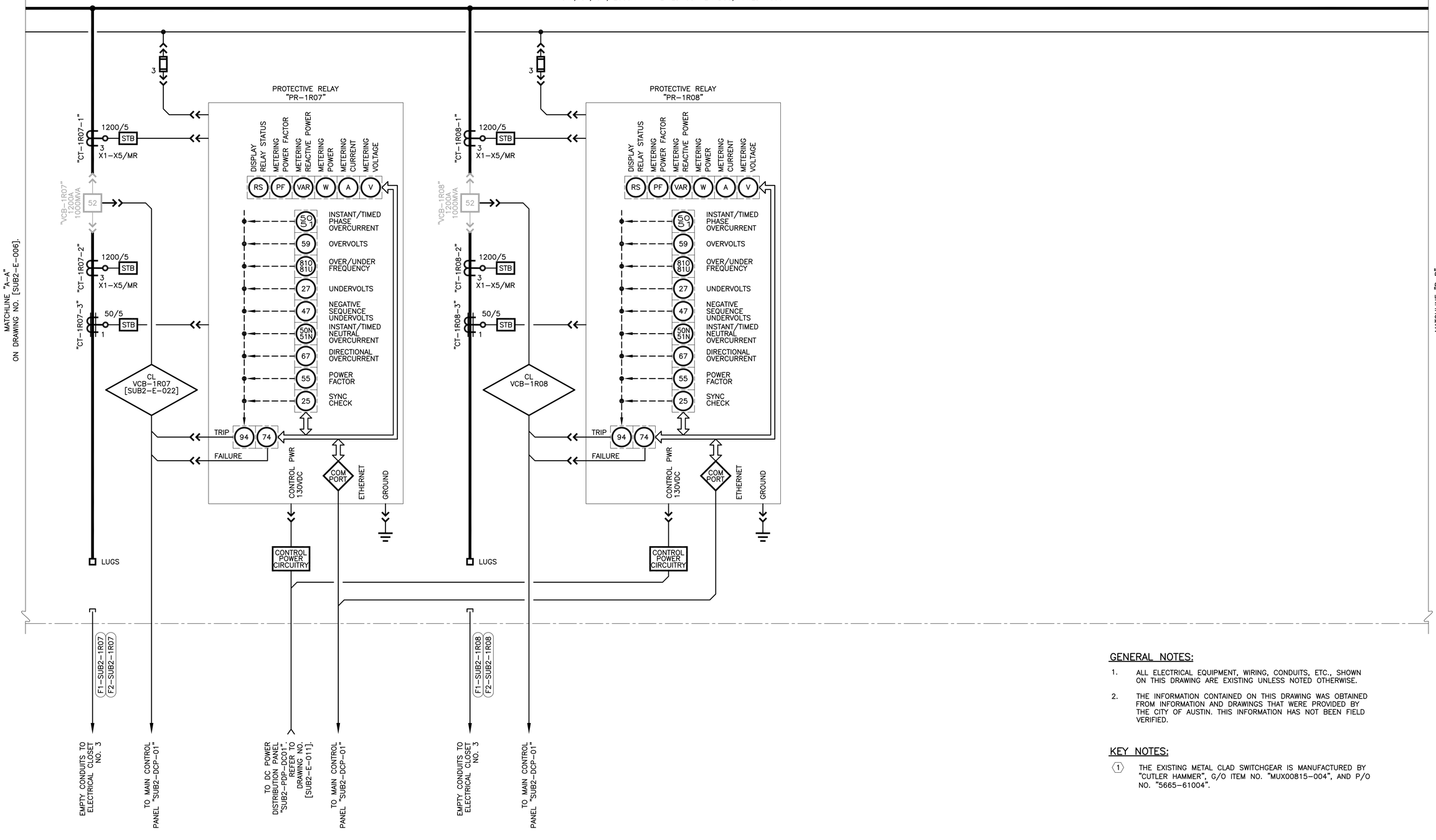

GENERAL NOTES:

1. ALL ELECTRICAL EQUIPMENT, WIRING, CONDUITS, ETC., SHOWN ON THIS DRAWING ARE EXISTING UNLESS NOTED OTHERWISE.
2. THE INFORMATION CONTAINED ON THIS DRAWING WAS OBTAINED FROM INFORMATION AND DRAWINGS THAT WERE PROVIDED BY THE CITY OF AUSTIN. THIS INFORMATION HAS NOT BEEN FIELD VERIFIED.

KEY NOTES:

(1) THE EXISTING METAL CLAD SWITCHGEAR IS MANUFACTURED BY "CUTLER HAMMER", G/O ITEM NO. "MUX00815-004", AND P/O NO. "5665-61004".

BAR LENGTH ON ORIGINAL DRAWING EQUALS ONE INCH, ADJUST SCALE ACCORDINGLY.

REUSE OF DOCUMENTS

This document, and the designs incorporated herein, is an instrument of professional service that has been developed, designed and prepared by Harutunian Engineering, Inc., and is not to be used, in whole or in part, for any other project without giving written notice to Harutunian Engineering, Inc.

NO.	DATE:	DESCRIPTION

HARUTUNIAN ENGINEERING INCORPORATED

TEXAS FIRM REGISTRATION NUMBER F-2408

ENGINEERING AND ENVIRONMENTAL CONSULTANTS
8100 CROSS PARK DRIVE
AUSTIN, TEXAS 78754

STATE OF TEXAS
SHANT HARUTUNIAN
87735
REGISTERED
PROFESSIONAL ENGINEER
10/7/2019

DESIGNED BY:	HEI
CHECKED BY:	HEI
APPROVED BY:	HEI
SUBMITTAL DATE:	OCTOBER 2019
SCALE:	AS SHOWN

SOUTH AUSTIN REGIONAL WASTEWATER TREATMENT PLANT
ELECTRICAL SUBSTATION NO. 1 REPLACEMENT PROJECT
CIP I.D.# 3333.032

ELECTRICAL SUBSTATION NO. 2 DETAILED ONE-LINE DIAGRAM EXISTING (SHEET 7 OF 11)

PROJECT NO: 2014-300 | SHT. 690 OF 866 | DWG NO. SUB2-E-007

12470V SWITCHGEAR "SUB2-SWGR-1R" (1)

15kV, 3ø, 3W, 2000A TIN PLATED COPPER BUS, RATED 1000MVA

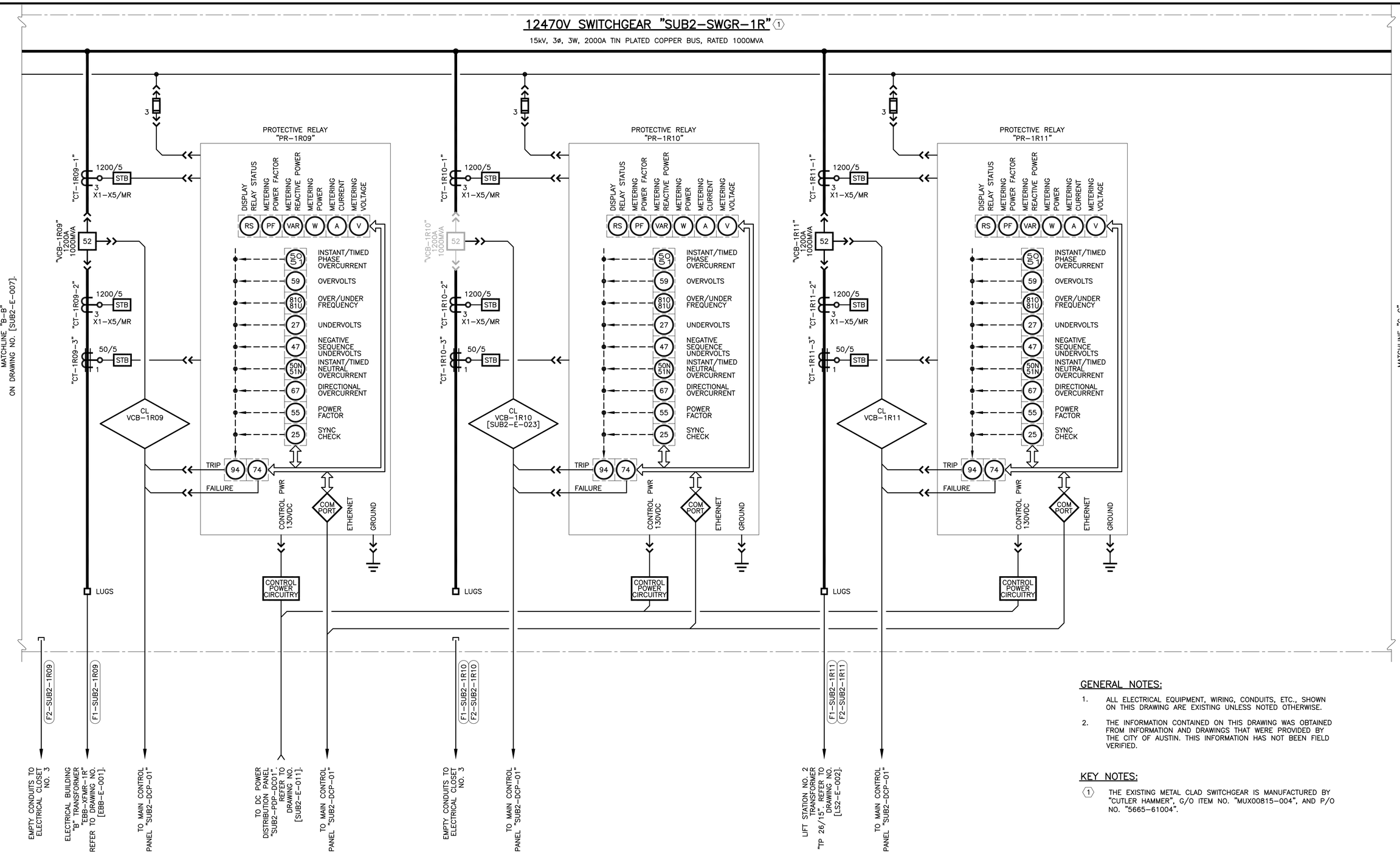

GENERAL NOTES:

1. ALL ELECTRICAL EQUIPMENT, WIRING, CONDUITS, ETC., SHOWN ON THIS DRAWING ARE EXISTING UNLESS NOTED OTHERWISE.
2. THE INFORMATION CONTAINED ON THIS DRAWING WAS OBTAINED FROM INFORMATION AND DRAWINGS THAT WERE PROVIDED BY THE CITY OF AUSTIN. THIS INFORMATION HAS NOT BEEN FIELD VERIFIED.

KEY NOTES:

(1) THE EXISTING METAL CLAD SWITCHGEAR IS MANUFACTURED BY "CUTLER HAMMER", G/O ITEM NO. "MUX00815-004", AND P/O NO. "5665-61004".

BAR LENGTH ON ORIGINAL DRAWING EQUALS ONE INCH, ADJUST SCALE ACCORDINGLY.

REUSE OF DOCUMENTS

This document, and the designs incorporated herein, is an instrument of professional service that has been developed, designed and prepared by Harutunian Engineering, Inc., and is not to be used, in whole or in part, for any other project without giving written notice to Harutunian Engineering, Inc.

NO.	DATE:	DESCRIPTION

HARUTUNIAN ENGINEERING INCORPORATED

TEXAS FIRM REGISTRATION NUMBER F-2408

ENGINEERING AND ENVIRONMENTAL CONSULTANTS
8100 CROSS PARK DRIVE
AUSTIN, TEXAS 78754

STATE OF TEXAS
SHANT HARUTUNIAN
87735
REGISTERED
PROFESSIONAL ENGINEER
10/7/2019

DESIGNED BY:	HEI
CHECKED BY:	HEI
APPROVED BY:	HEI
SUBMITTAL DATE:	OCTOBER 2019
SCALE:	AS SHOWN

SOUTH AUSTIN REGIONAL WASTEWATER TREATMENT PLANT
ELECTRICAL SUBSTATION NO. 1 REPLACEMENT PROJECT
CIP I.D.# 3333.032

ELECTRICAL SUBSTATION NO. 2 DETAILED ONE-LINE DIAGRAM EXISTING (SHEET 8 OF 11)

PROJECT NO: 2014-300 | SHT. 691 OF 866 | DWG NO. SUB2-E-008

12470V SWITCHGEAR "SUB2-SWGR-1R" (1)

15kV, 3ø, 3W, 2000A TIN PLATED COPPER BUS, RATED 1000MVA

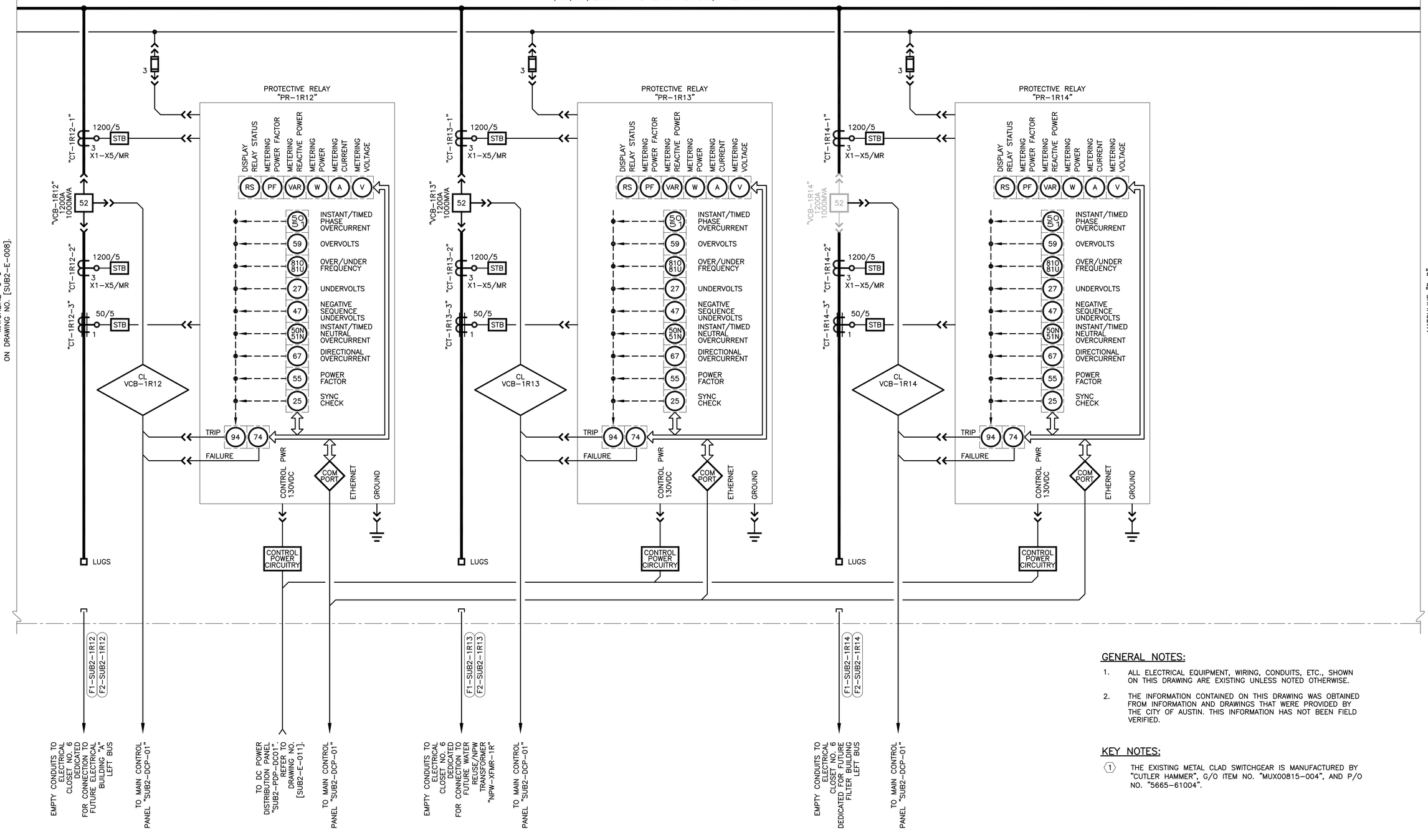

GENERAL NOTES:

1. ALL ELECTRICAL EQUIPMENT, WIRING, CONDUITS, ETC., SHOWN ON THIS DRAWING ARE EXISTING UNLESS NOTED OTHERWISE.
2. THE INFORMATION CONTAINED ON THIS DRAWING WAS OBTAINED FROM INFORMATION AND DRAWINGS THAT WERE PROVIDED BY THE CITY OF AUSTIN. THIS INFORMATION HAS NOT BEEN FIELD VERIFIED.

KEY NOTES:

(1) THE EXISTING METAL CLAD SWITCHGEAR IS MANUFACTURED BY "CUTLER HAMMER", G/O ITEM NO. "MUX00815-004", AND P/O NO. "5665-61004".

BAR LENGTH ON ORIGINAL DRAWING EQUALS ONE INCH, ADJUST SCALE ACCORDINGLY.

REUSE OF DOCUMENTS

This document, and the designs incorporated herein, is an instrument of professional service that has been developed, designed and prepared by Harutunian Engineering, Inc., and is not to be used, in whole or in part, for any other project without giving written notice to Harutunian Engineering, Inc.

NO.	DATE:	DESCRIPTION

HARUTUNIAN ENGINEERING INCORPORATED

TEXAS FIRM REGISTRATION NUMBER F-2408

ENGINEERING AND ENVIRONMENTAL CONSULTANTS
8100 CROSS PARK DRIVE
AUSTIN, TEXAS 78754

STATE OF TEXAS
SHANT HARUTUNIAN
87735
REGISTERED
PROFESSIONAL ENGINEER
10/7/2019

DESIGNED BY:	HEI
CHECKED BY:	HEI
APPROVED BY:	HEI
SUBMITTAL DATE:	OCTOBER 2019
SCALE:	AS SHOWN

SOUTH AUSTIN REGIONAL WASTEWATER TREATMENT PLANT
ELECTRICAL SUBSTATION NO. 1 REPLACEMENT PROJECT
CIP I.D.# 3333.032

ELECTRICAL SUBSTATION NO. 2 DETAILED ONE-LINE DIAGRAM EXISTING (SHEET 9 OF 11)

PROJECT NO: 2014-300 | SHT. 692 OF 866 | DWG NO. SUB2-E-009

12470V SWITCHGEAR "SUB2-SWGR-1R" (1)

15kV, 3ø, 3W, 2000A TIN PLATED COPPER BUS, RATED 1000MVA

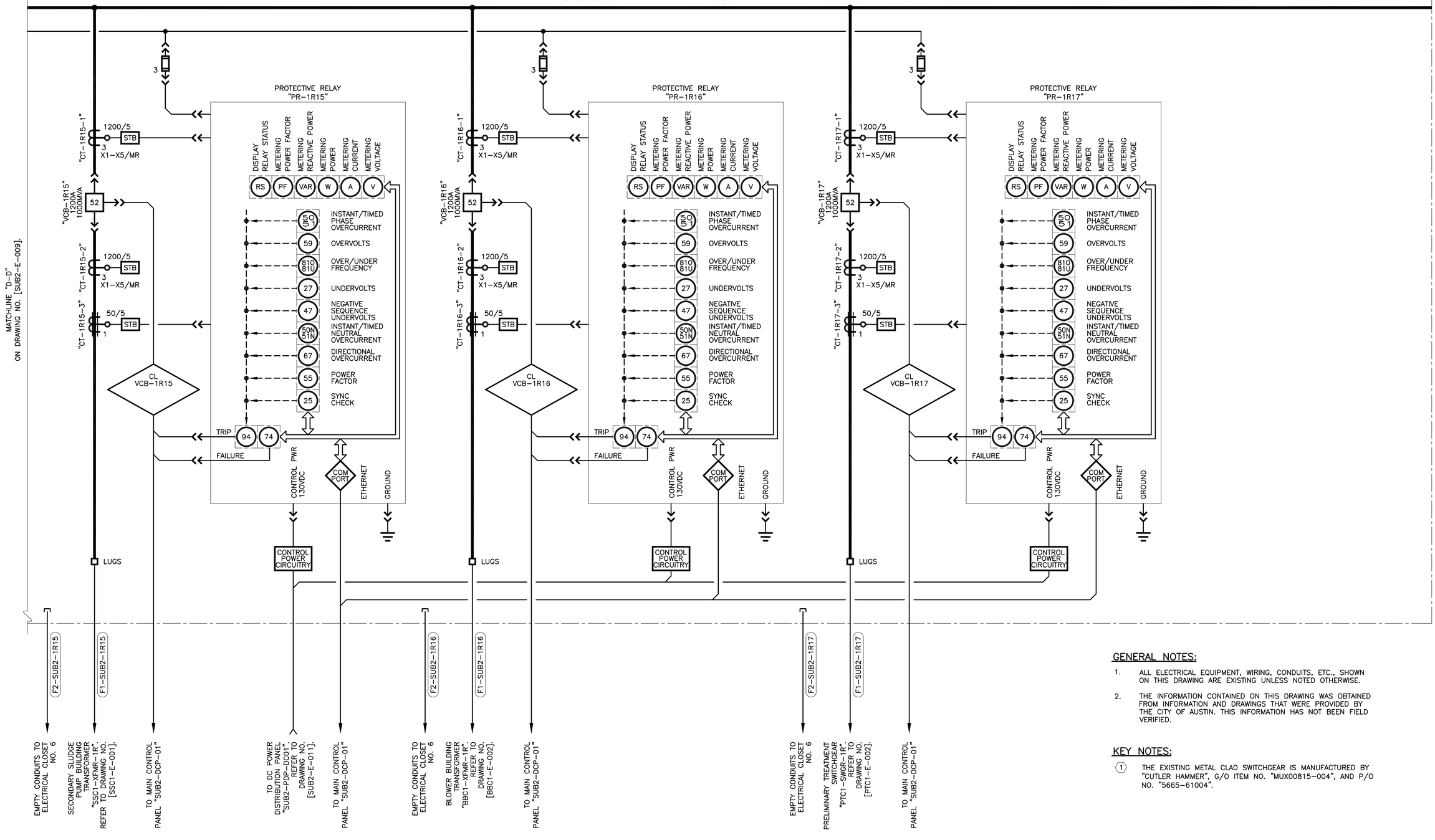

GENERAL NOTES:

1. ALL ELECTRICAL EQUIPMENT, WIRING, CONDUITS, ETC., SHOWN ON THIS DRAWING ARE EXISTING UNLESS NOTED OTHERWISE.
2. THE INFORMATION CONTAINED ON THIS DRAWING WAS OBTAINED FROM INFORMATION AND DRAWINGS THAT WERE PROVIDED BY THE CITY OF AUSTIN. THIS INFORMATION HAS NOT BEEN FIELD VERIFIED.

KEY NOTES:

(1) THE EXISTING METAL CLAD SWITCHGEAR IS MANUFACTURED BY "CUTLER HAMMER", G/O ITEM NO. "MUX00815-004", AND P/O NO. "5665-61004".

BAR LENGTH ON ORIGINAL DRAWING EQUALS ONE INCH, ADJUST SCALE ACCORDINGLY.

REUSE OF DOCUMENTS

This document, and the designs incorporated herein, is an instrument of professional service that has been developed, designed and prepared by Harutunian Engineering, Inc., and is not to be used, in whole or in part, for any other project without giving written notice to Harutunian Engineering, Inc.

NO.	DATE:	DESCRIPTION

HARUTUNIAN ENGINEERING INCORPORATED

TEXAS FIRM REGISTRATION NUMBER F-2408

ENGINEERING AND ENVIRONMENTAL CONSULTANTS
8100 CROSS PARK DRIVE
AUSTIN, TEXAS 78754

STATE OF TEXAS
SHANT HARUTUNIAN
87735
REGISTERED
PROFESSIONAL ENGINEER
10/7/2019

DESIGNED BY:	HEI
CHECKED BY:	HEI
APPROVED BY:	HEI
SUBMITTAL DATE:	OCTOBER 2019
SCALE:	AS SHOWN

SOUTH AUSTIN REGIONAL WASTEWATER TREATMENT PLANT
ELECTRICAL SUBSTATION NO. 1 REPLACEMENT PROJECT
CIP I.D.# 3333.032

ELECTRICAL SUBSTATION NO. 2 DETAILED ONE-LINE DIAGRAM EXISTING (SHEET 10 OF 11)

PROJECT NO: 2014-300 | SHT. 693 OF 866 | DWG NO. SUB2-E-010

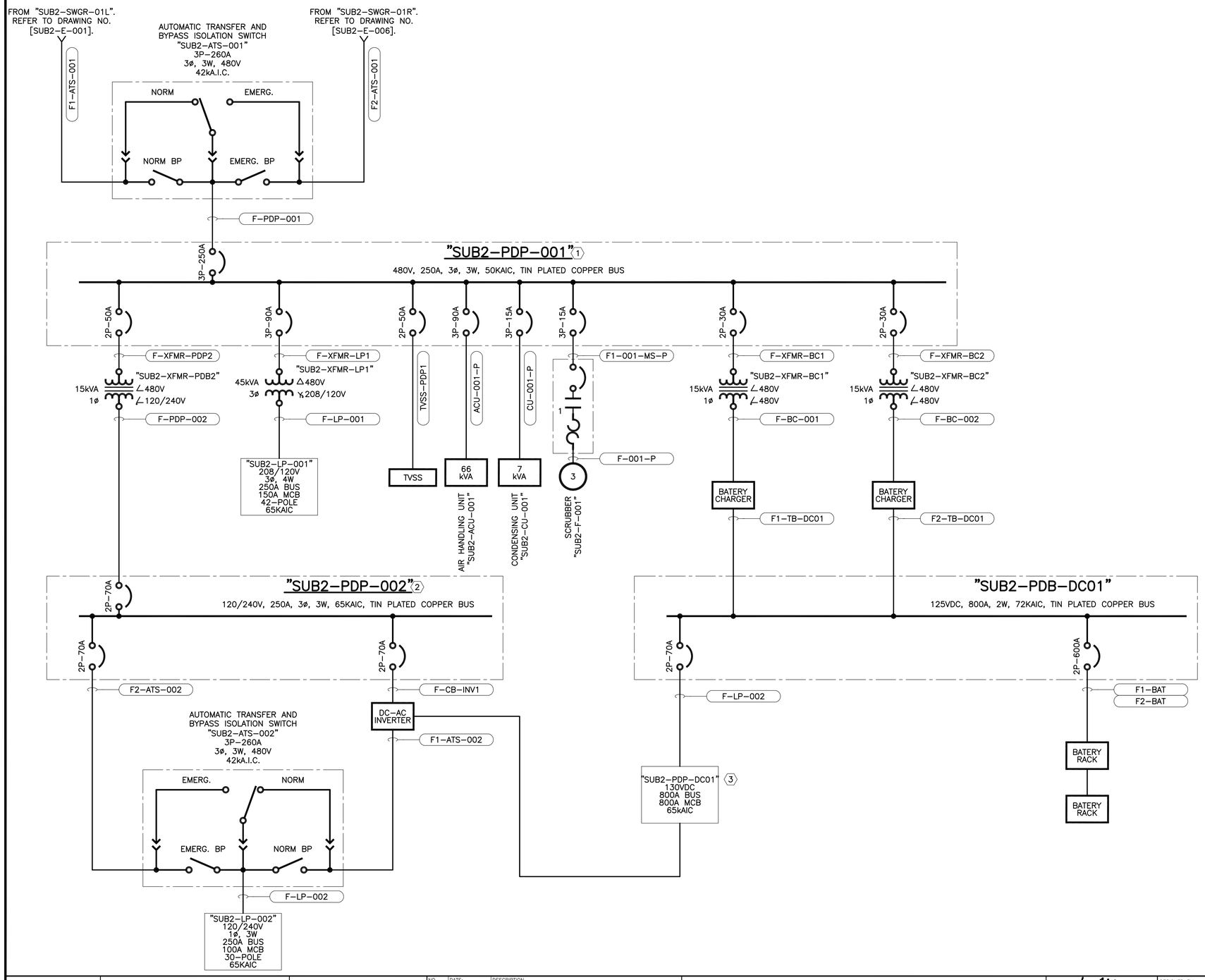

GENERAL NOTES:

1. ALL ELECTRICAL EQUIPMENT, WIRING, CONDUITS, ETC., SHOWN ON THIS DRAWING ARE EXISTING UNLESS NOTED OTHERWISE.
2. THE INFORMATION CONTAINED ON THIS DRAWING WAS OBTAINED FROM INFORMATION AND DRAWINGS THAT WERE PROVIDED BY THE CITY OF AUSTIN. THIS INFORMATION HAS NOT BEEN FIELD VERIFIED.

KEY NOTES:

1. THE EXISTING 480V POWER DISTRIBUTION PANEL IS MANUFACTURED BY "EATON ELECTRICAL", MODEL NO. "P4E250BT22TH00".
2. THE EXISTING 240/120V POWER DISTRIBUTION PANEL IS MANUFACTURED BY "EATON ELECTRICAL", MODEL NO. "P3C250BT26TH12".
3. THE EXISTING 130VDC POWER DISTRIBUTION BUS IS MANUFACTURED BY "EATON ELECTRICAL", MODEL NO. "P4D800BT36TH01".

BAR LENGTH ON ORIGINAL DRAWING EQUALS ONE INCH, ADJUST SCALE ACCORDINGLY.

REUSE OF DOCUMENTS

This document, and the designs incorporated herein, is an instrument of professional service that has been developed, designed and prepared by Harutunian Engineering, Inc., and is not to be used, in whole or in part, for any other project without giving written notice to Harutunian Engineering, Inc.

NO.	DATE:	DESCRIPTION

HARUTUNIAN ENGINEERING INCORPORATED
TEXAS FIRM REGISTRATION NUMBER F-2408
ENGINEERING AND ENVIRONMENTAL CONSULTANTS
8100 CROSS PARK DRIVE
AUSTIN, TEXAS 78754

STATE OF TEXAS
SHANT HARUTUNIAN
87735
REGISTERED
PROFESSIONAL ENGINEER
10/7/2019

DESIGNED BY:	HEI
CHECKED BY:	HEI
APPROVED BY:	HEI
SUBMITTAL DATE:	OCTOBER 2019
SCALE:	AS SHOWN

SOUTH AUSTIN REGIONAL WASTEWATER TREATMENT PLANT
ELECTRICAL SUBSTATION NO. 1 REPLACEMENT PROJECT
CIP I.D.# 3333.032

ELECTRICAL SUBSTATION NO. 2 DETAILED ONE-LINE DIAGRAM EXISTING (SHEET 11 OF 11)

PROJECT NO: 2014-300 | SHT. 694 OF 866 | DWG NO. SUB2-E-011

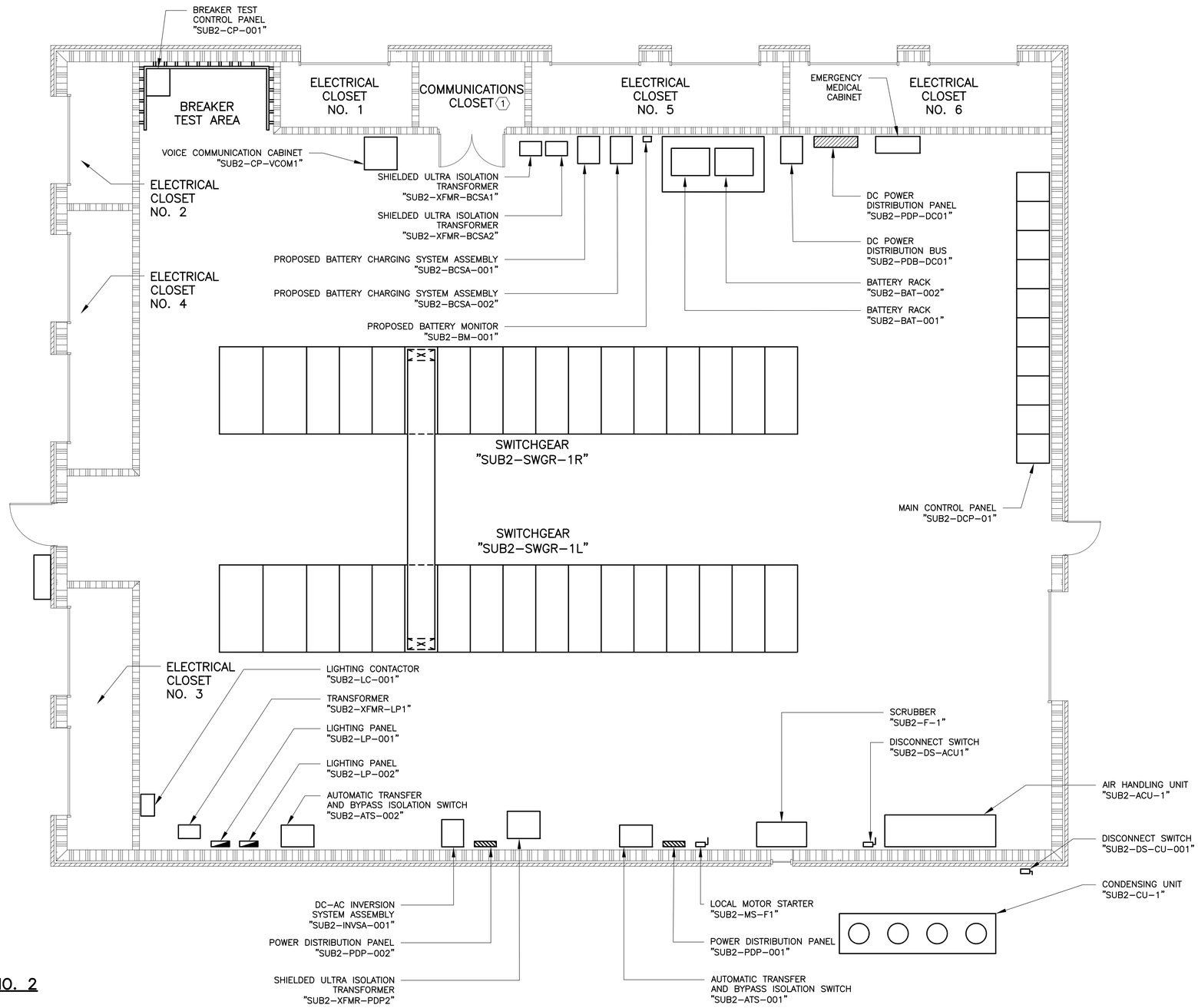

N

PLANT NORTH

SUBSTATION NO. 2

SCALE: 3/16" = 1'

GENERAL NOTES:

1. ALL ELECTRICAL EQUIPMENT, WIRING, CONDUITS, ETC., SHOWN ON THIS DRAWING ARE EXISTING UNLESS NOTED OTHERWISE.
2. THE INFORMATION CONTAINED ON THIS DRAWING WAS OBTAINED FROM INFORMATION AND DRAWINGS THAT WERE PROVIDED BY THE CITY OF AUSTIN. THIS INFORMATION HAS NOT BEEN FIELD VERIFIED.

KEY NOTES:

1. RACK MOUNTED FIBER OPTIC PATCH PANELS LOCATED IN THE COMMUNICATION CLOSET. REFER TO NETWORK ARCHITECTURE ON DRAWING NO. [SUB2-I-001].

BAR LENGTH ON ORIGINAL DRAWING EQUALS ONE INCH, ADJUST SCALE ACCORDINGLY.

REUSE OF DOCUMENTS

This document, and the designs incorporated herein, is an instrument of professional service that has been developed, designed and prepared by Harutunian Engineering, Inc., and is not to be used, in whole or in part, for any other project without giving written notice to Harutunian Engineering, Inc.

NO.	DATE:	DESCRIPTION

HARUTUNIAN ENGINEERING INCORPORATED

TEXAS FIRM REGISTRATION NUMBER F-2408

ENGINEERING AND ENVIRONMENTAL CONSULTANTS
8100 CROSS PARK DRIVE
AUSTIN, TEXAS 78754

STATE OF TEXAS
SHANT HARUTUNIAN
87735
REGISTERED
PROFESSIONAL ENGINEER
10/7/2019

DESIGNED BY:	HEI
CHECKED BY:	HEI
APPROVED BY:	HEI
SUBMITTAL DATE:	OCTOBER 2019
SCALE:	AS SHOWN

SOUTH AUSTIN REGIONAL WASTEWATER TREATMENT PLANT
ELECTRICAL SUBSTATION NO. 1 REPLACEMENT PROJECT
CIP I.D.# 3333.032

ELECTRICAL SUBSTATION NO. 2
EQUIPMENT LOCATION PLAN – EXISTING

PROJECT NO: 2014-300 | SHT. 695 OF 866 | DWG NO. SUB2-E-012

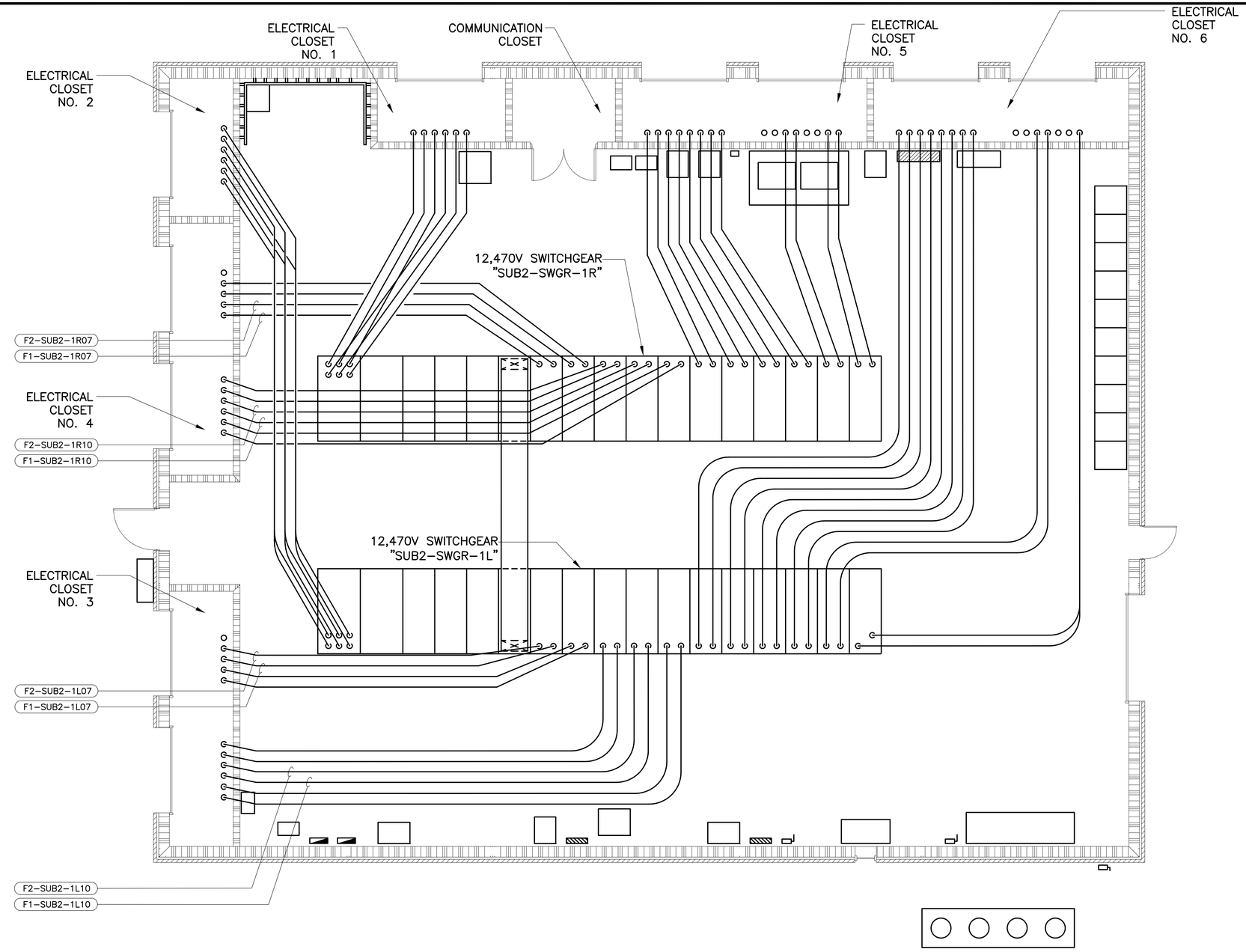

GENERAL NOTES:

1. ALL ELECTRICAL EQUIPMENT, WIRING, CONDUITS, ETC., SHOWN ON THIS DRAWING ARE EXISTING UNLESS NOTED OTHERWISE.
2. THE INFORMATION CONTAINED ON THIS DRAWING WAS OBTAINED FROM INFORMATION AND DRAWINGS THAT WERE PROVIDED BY THE CITY OF AUSTIN. THIS INFORMATION HAS NOT BEEN FIELD VERIFIED.

N

PLANT NORTH

SUBSTATION NO. 2

SCALE: 3/16" = 1'

BAR LENGTH ON ORIGINAL DRAWING EQUALS ONE INCH, ADJUST SCALE ACCORDINGLY.

REUSE OF DOCUMENTS

This document, and the designs incorporated herein, is an instrument of professional service that has been developed, designed and prepared by Harutunian Engineering, Inc., and is not to be used, in whole or in part, for any other project without giving written notice to Harutunian Engineering, Inc.

NO.	DATE:	DESCRIPTION

HARUTUNIAN ENGINEERING INCORPORATED

TEXAS FIRM REGISTRATION NUMBER F-2408

ENGINEERING AND ENVIRONMENTAL CONSULTANTS
8100 CROSS PARK DRIVE
AUSTIN, TEXAS 78754

STATE OF TEXAS
SHANT HARUTUNIAN
87735
REGISTERED
PROFESSIONAL ENGINEER
10/7/2019

DESIGNED BY:	HEI
CHECKED BY:	HEI
APPROVED BY:	HEI
SUBMITTAL DATE:	OCTOBER 2019
SCALE:	AS SHOWN

SOUTH AUSTIN REGIONAL WASTEWATER TREATMENT PLANT
ELECTRICAL SUBSTATION NO. 1 REPLACEMENT PROJECT
CIP I.D.# 3333.032

ELECTRICAL SUBSTATION NO. 2
15kV POWER CONDUIT ROUTING PLAN – EXISTING

PROJECT NO: 2014-300 | SHT. 696 OF 866 | DWG NO. SUB2-E-013

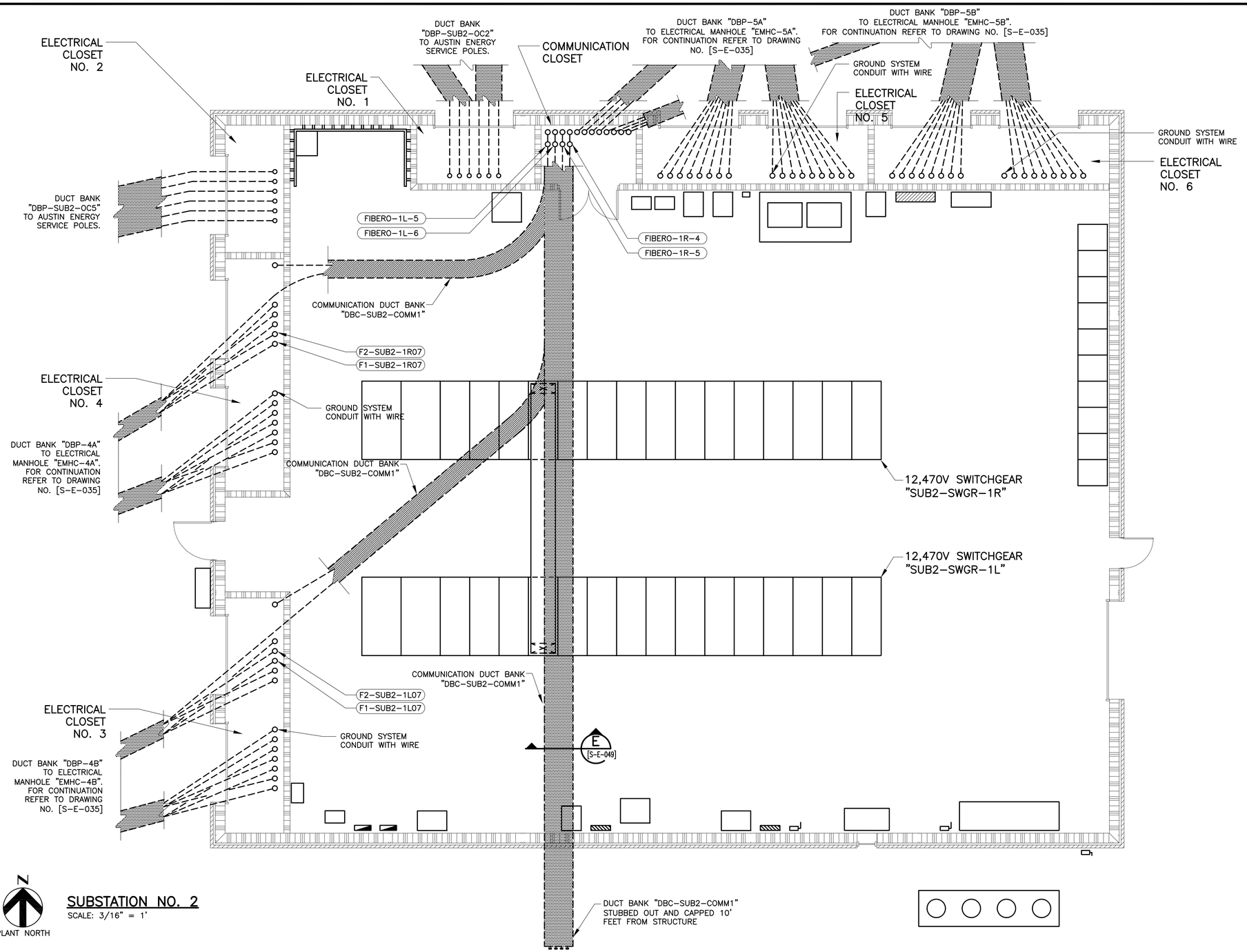

SUBSTATION NO. 2

SCALE: 3/16" = 1'

GENERAL NOTES:

1. ALL ELECTRICAL EQUIPMENT, WIRING, CONDUITS, ETC., SHOWN ON THIS DRAWING ARE EXISTING UNLESS NOTED OTHERWISE.
2. THE INFORMATION CONTAINED ON THIS DRAWING WAS OBTAINED FROM INFORMATION AND DRAWINGS THAT WERE PROVIDED BY THE CITY OF AUSTIN. THIS INFORMATION HAS NOT BEEN FIELD VERIFIED.

BAR LENGTH ON ORIGINAL DRAWING EQUALS ONE INCH, ADJUST SCALE ACCORDINGLY.

REUSE OF DOCUMENTS

This document, and the designs incorporated herein, is an instrument of professional service that has been developed, designed and prepared by Harutunian Engineering, Inc., and is not to be used, in whole or in part, for any other project without giving written notice to Harutunian Engineering, Inc.

NO.	DATE:	DESCRIPTION

HARUTUNIAN ENGINEERING INCORPORATED

TEXAS FIRM REGISTRATION NUMBER F-2408

ENGINEERING AND ENVIRONMENTAL CONSULTANTS
8100 CROSS PARK DRIVE
AUSTIN, TEXAS 78754

STATE OF TEXAS
SHANT HARUTUNIAN
87735
REGISTERED
PROFESSIONAL ENGINEER
10/7/2019

DESIGNED BY:	HEI
CHECKED BY:	HEI
APPROVED BY:	HEI
SUBMITTAL DATE:	OCTOBER 2019
SCALE:	AS SHOWN

SOUTH AUSTIN REGIONAL WASTEWATER TREATMENT PLANT
ELECTRICAL SUBSTATION NO. 1 REPLACEMENT PROJECT
CIP I.D.# 3333.032

ELECTRICAL SUBSTATION NO. 2
UNDERGROUND DUCTBANK PLAN – EXISTING

PROJECT NO: 2014-300 | SHT. 697 OF 866 | DWG NO. SUB2-E-014

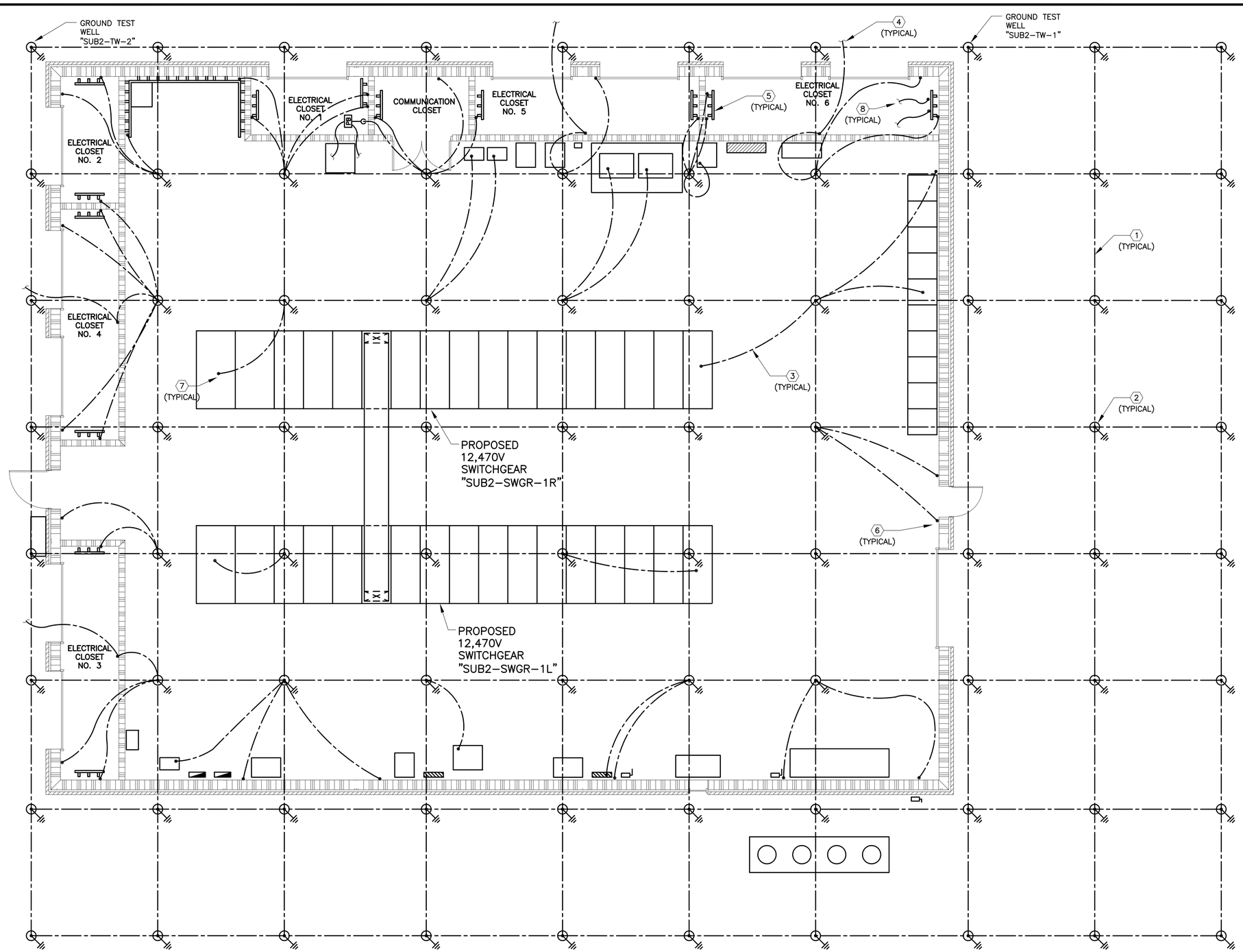

GENERAL NOTES:

1. ALL ELECTRICAL EQUIPMENT, WIRING, CONDUITS, ETC., SHOWN ON THIS DRAWING ARE EXISTING UNLESS NOTED OTHERWISE.
2. THE INFORMATION CONTAINED ON THIS DRAWING WAS OBTAINED FROM INFORMATION AND DRAWINGS THAT WERE PROVIDED BY THE CITY OF AUSTIN. THIS INFORMATION HAS NOT BEEN FIELD VERIFIED.

KEY NOTES:

1. EXISTING DIRECT BURIED BARE GROUNDING CONDUCTOR.
2. EXISTING GROUND ROD.
3. EXISTING GROUNDING ELECTRODE IN 1-1/2" PVC CONDUIT STUBS-UP IN TO SUBSTATION BUILDING.
4. EXISTING GROUNDING ELECTRODE IN 1-1/2" PVC CONDUIT CONTINUES IN UNDERGROUND DUCTBANK.
5. EXISTING GROUND BUS BAR.
6. EXISTING GROUNDING ELECTRODE BONDED TO BUILDING STRUCTURAL STEEL COLUMN.
7. EXISTING GROUNDING ELECTRODE TERMINATED TO EQUIPMENT GROUND BUS.
8. EXISTING GROUNDING ELECTRODE CONTINUES TO CABLE RACKS. ALTHOUGH ONLY SHOWN HERE, THIS IS TYPICAL FOR EACH CABLE CLOSET.

N
PLANT NORTH

SUBSTATION NO. 2
SCALE: 3/16" = 1'

BAR LENGTH ON ORIGINAL DRAWING EQUALS ONE INCH, ADJUST SCALE ACCORDINGLY.

REUSE OF DOCUMENTS

This document, and the designs incorporated herein, is an instrument of professional service that has been developed, designed and prepared by Harutunian Engineering, Inc., and is not to be used, in whole or in part, for any other project without giving written notice to Harutunian Engineering, Inc.

NO.	DATE:	DESCRIPTION

HARUTUNIAN ENGINEERING INCORPORATED
TEXAS FIRM REGISTRATION NUMBER F-2408
ENGINEERING AND ENVIRONMENTAL CONSULTANTS
8100 CROSS PARK DRIVE
AUSTIN, TEXAS 78754

STATE OF TEXAS · SHANT HARUTUNIAN · 87735 · REGISTERED · PROFESSIONAL ENGINEER
10/7/2019

DESIGNED BY:	HEI
CHECKED BY:	HEI
APPROVED BY:	HEI
SUBMITTAL DATE:	OCTOBER 2019
SCALE:	AS SHOWN

SOUTH AUSTIN REGIONAL WASTEWATER TREATMENT PLANT
ELECTRICAL SUBSTATION NO. 1 REPLACEMENT PROJECT
CIP I.D.# 3333.032

ELECTRICAL SUBSTATION NO. 2
GROUNDING PLAN – EXISTING

PROJECT NO: 2014-300 | SHT. 698 OF 866 | DWG NO. SUB2-E-015

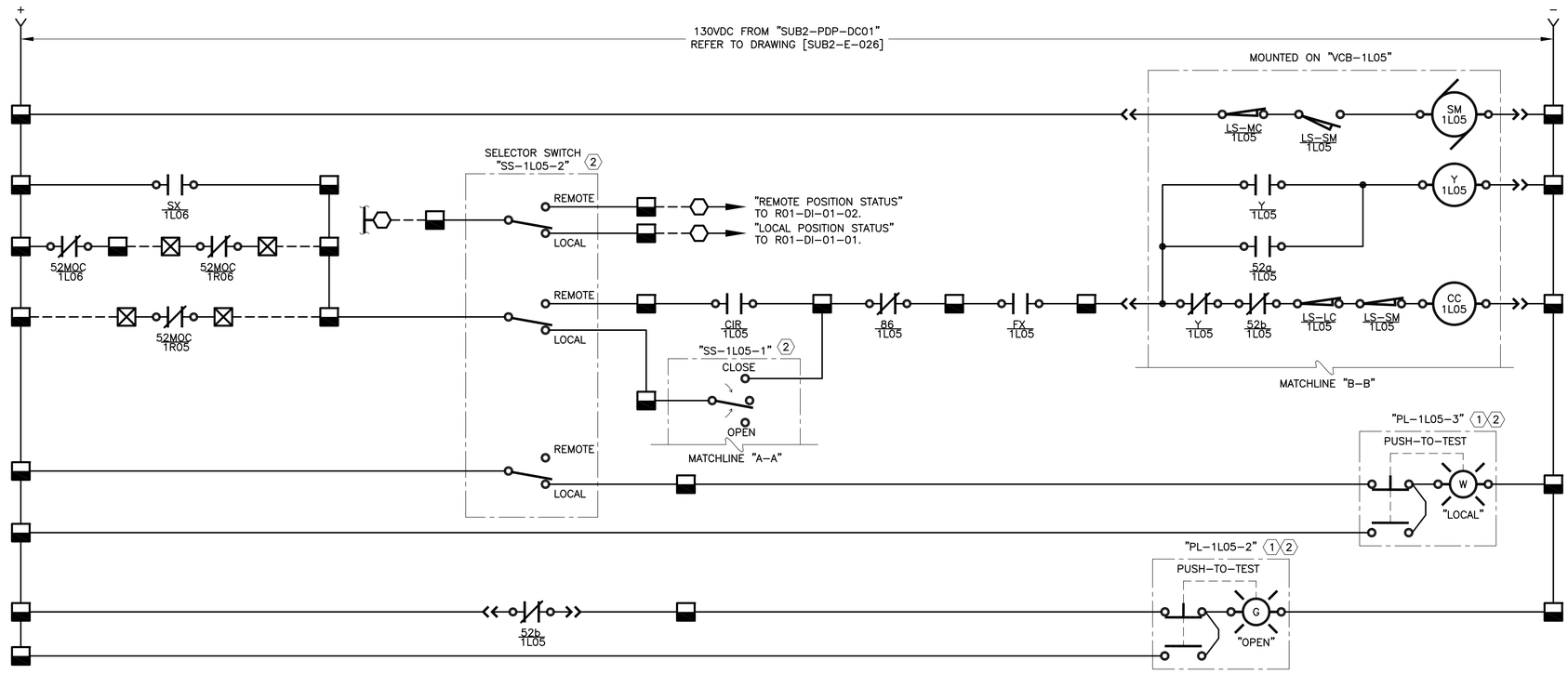

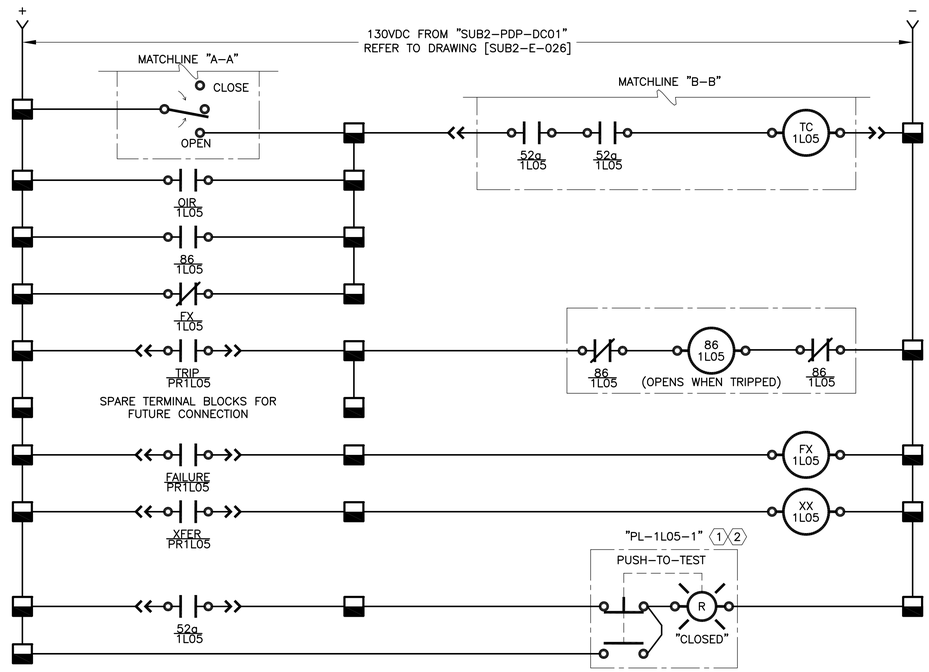

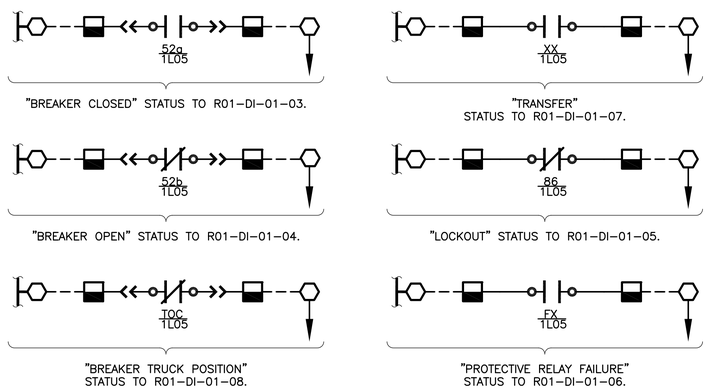

CONTROL LOGIC DEVICE LEGEND:

52a	BREAKER MOUNTED AUXILIARY CONTACT – OPEN WHEN BREAKER IS OPEN
52b	BREAKER MOUNTED AUXILIARY CONTACT – CLOSED WHEN BREAKER IS OPEN
52MOC	MECHANISM OPERATED CELL SWITCH – OPERATES AS AUXILIARY CONTACT WHEN BREAKER IS IN CONNECTED OR TEST POSITION
LS-MC	SPRING MOTOR CUTOFF SWITCH – OPEN WHEN BREAKER IS RACKED OUT
LS-SM	SPRING MOTOR LIMIT SWITCH – SHOWN WITH SPRINGS CHARGED – CHANGES STATES WHEN SPRING IS DISCHARGED
LS-LC	LATCH CHECK SWITCH – OPENS WHEN TRIP LATCH MOVES OUT OF ITS NORMAL POSITION
SM	SPRING CHARGING MOTOR
Y	ANTI-PUMP RELAY – PREVENTS ENERGIZATION OF CLOSE COIL WHEN ENERGIZED
CC	BREAKER CLOSE COIL – CLOSES BREAKER WHEN ENERGIZED
TC	BREAKER TRIP COIL – OPENS BREAKER WHEN ENERGIZED
86	PROTECTIVE RELAY TRIP LOCKOUT RELAY – MANUAL RESET
FX	PROTECTIVE RELAY FAILURE AUXILIARY RELAY – ENERGIZED WHEN PROTECTIVE RELAY STATUS IS OK
XX	PROTECTIVE RELAY XFER AUXILIARY RELAY
TOC	TRUCK OPERATED CONTACT – CONTACTS SHOWN WITH BREAKER RACKED OUT
SX	SYNC ENABLE AUXILIARY RELAY
S2L1PX	SUBSTATION MANAGEMENT RELAY PERMISSIVE OUTPUT AUXILIARY RELAY
S2L2PX	SUBSTATION MANAGEMENT RELAY PERMISSIVE OUTPUT AUXILIARY RELAY
PRMSV	BREAKER CLOSE PERMISSIVE AUXILIARY RELAY

KEY NOTES:

(1) INDICATING PILOT LIGHT WITH INTEGRAL MOMENTARY ACTION "PUSH-TO-TEST" PUSH BUTTON.

(2) MOUNTED ON FRONT OF PROPOSED SWITCHGEAR "SUB2-SWGR-1L" SECTION 1L05A.

BAR LENGTH ON ORIGINAL DRAWING EQUALS ONE INCH, ADJUST SCALE ACCORDINGLY.

REUSE OF DOCUMENTS

This document, and the designs incorporated herein, is an instrument of professional service that has been developed, designed and prepared by Harutunian Engineering, Inc., and is not to be used, in whole or in part, for any other project without giving written notice to Harutunian Engineering, Inc.

NO.	DATE:	DESCRIPTION

HARUTUNIAN ENGINEERING INCORPORATED
TEXAS FIRM REGISTRATION NUMBER F-2408
ENGINEERING AND ENVIRONMENTAL CONSULTANTS
8100 CROSS PARK DRIVE
AUSTIN, TEXAS 78754

STATE OF TEXAS · SHANT HARUTUNIAN · 87735 · REGISTERED PROFESSIONAL ENGINEER
10/7/2019

DESIGNED BY:	HEI
CHECKED BY:	HEI
APPROVED BY:	HEI
SUBMITTAL DATE:	OCTOBER 2019
SCALE:	AS SHOWN

SOUTH AUSTIN REGIONAL WASTEWATER TREATMENT PLANT
ELECTRICAL SUBSTATION NO. 1 REPLACEMENT PROJECT
CIP I.D.# 3333.032

ELECTRICAL SUBSTATION NO. 2
SUB2-SWGR-1L MAIN BREAKER "VCB-1L05"
CONTROL LOGIC – EXISTING

PROJECT NO: 2014-300 | SHT. 699 OF 866 | DWG NO. SUB2-E-016

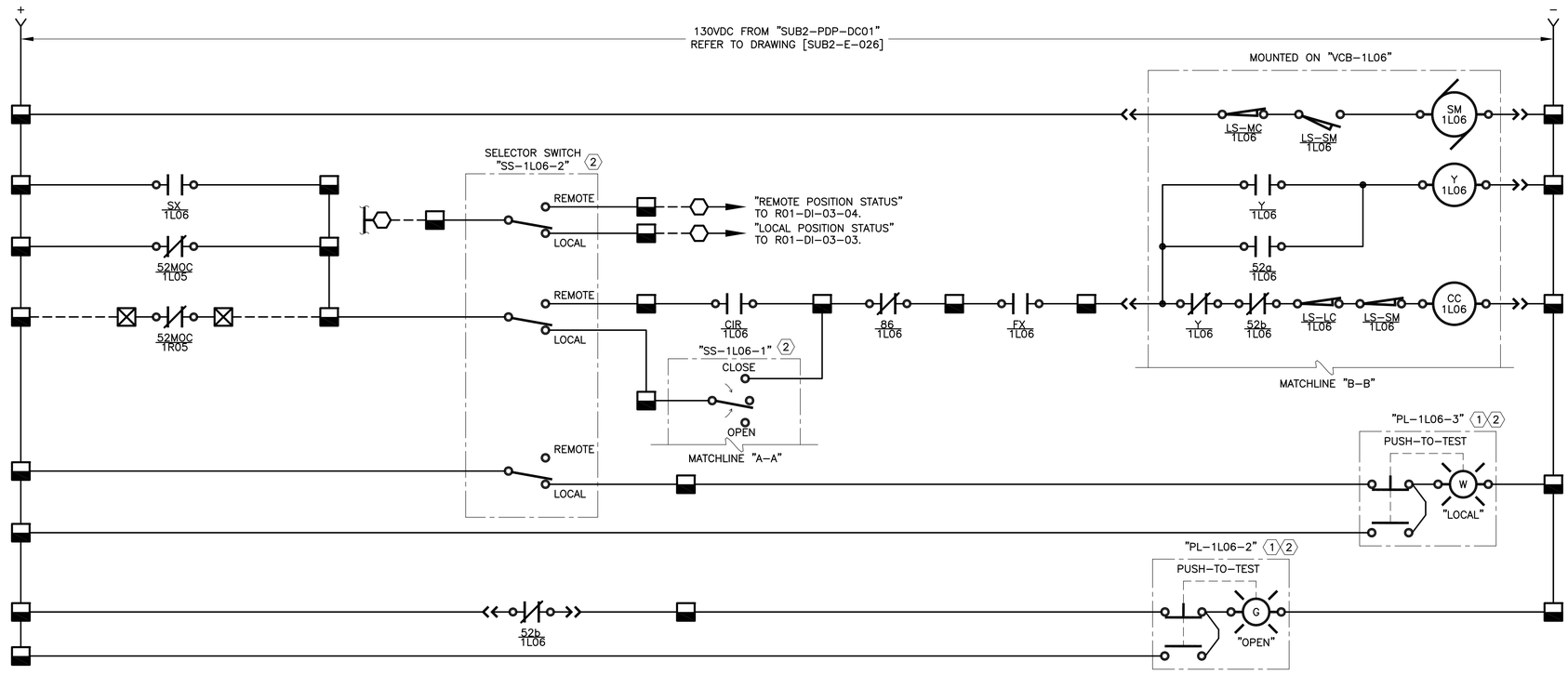

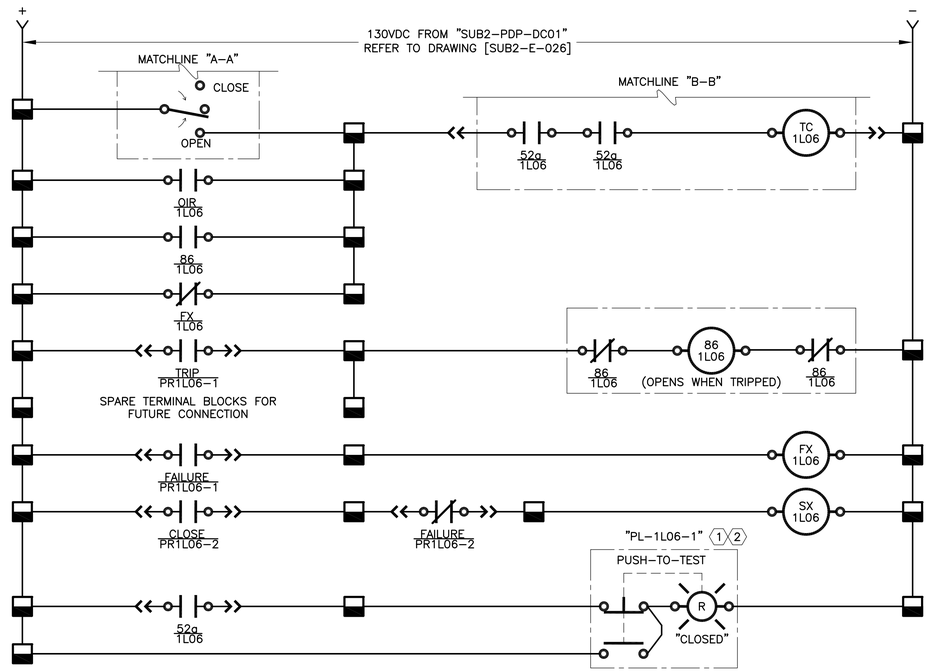

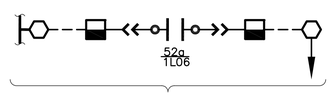

"BREAKER CLOSED" STATUS TO R01-DI-03-05.

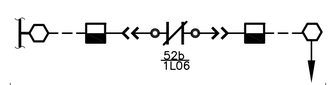

"BREAKER OPEN" STATUS TO R01-DI-03-06.

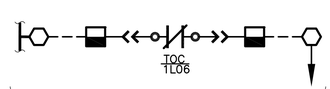

"BREAKER TRUCK POSITION" STATUS TO R01-DI-03-10.

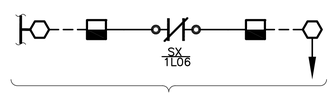

"SYNC CHECK RELAY" STATUS TO R01-DI-03-09.

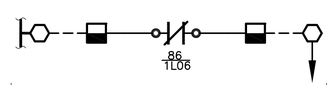

"LOCKOUT" STATUS TO R01-DI-03-07.

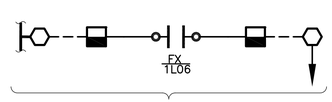

"PROTECTIVE RELAY FAILURE" STATUS TO R01-DI-03-08.

CONTROL LOGIC DEVICE LEGEND:

52a	BREAKER MOUNTED AUXILIARY CONTACT – OPEN WHEN BREAKER IS OPEN
52b	BREAKER MOUNTED AUXILIARY CONTACT – CLOSED WHEN BREAKER IS OPEN
52MOC	MECHANISM OPERATED CELL SWITCH – OPERATES AS AUXILIARY CONTACT WHEN BREAKER IS IN CONNECTED OR TEST POSITION
LS-MC	SPRING MOTOR CUTOFF SWITCH – OPEN WHEN BREAKER IS RACKED OUT
LS-SM	SPRING MOTOR LIMIT SWITCH – SHOWN WITH SPRINGS CHARGED – CHANGES STATES WHEN SPRING IS DISCHARGED
LS-LC	LATCH CHECK SWITCH – OPENS WHEN TRIP LATCH MOVES OUT OF ITS NORMAL POSITION
SM	SPRING CHARGING MOTOR
Y	ANTI-PUMP RELAY – PREVENTS ENERGIZATION OF CLOSE COIL WHEN ENERGIZED
CC	BREAKER CLOSE COIL – CLOSES BREAKER WHEN ENERGIZED
TC	BREAKER TRIP COIL – OPENS BREAKER WHEN ENERGIZED
86	PROTECTIVE RELAY TRIP LOCKOUT RELAY – MANUAL RESET
FX	PROTECTIVE RELAY FAILURE AUXILIARY RELAY – ENERGIZED WHEN PROTECTIVE RELAY STATUS IS OK
XX	PROTECTIVE RELAY XFER AUXILIARY RELAY
TOC	TRUCK OPERATED CONTACT – CONTACTS SHOWN WITH BREAKER RACKED OUT
SX	SYNC ENABLE AUXILIARY RELAY
S2L1PX	SUBSTATION MANAGEMENT RELAY PERMISSIVE OUTPUT AUXILIARY RELAY
S2L2PX	SUBSTATION MANAGEMENT RELAY PERMISSIVE OUTPUT AUXILIARY RELAY
PRMSV	BREAKER CLOSE PERMISSIVE AUXILIARY RELAY

KEY NOTES:

(1) INDICATING PILOT LIGHT WITH INTEGRAL MOMENTARY ACTION "PUSH-TO-TEST" PUSH BUTTON.

(2) MOUNTED ON FRONT OF PROPOSED SWITCHGEAR "SUB2-SWGR-1L" SECTION 1L06A.

BAR LENGTH ON ORIGINAL DRAWING EQUALS ONE INCH, ADJUST SCALE ACCORDINGLY.

REUSE OF DOCUMENTS

This document, and the designs incorporated herein, is an instrument of professional service that has been developed, designed and prepared by Harutunian Engineering, Inc., and is not to be used, in whole or in part, for any other project without giving written notice to Harutunian Engineering, Inc.

NO.	DATE:	DESCRIPTION

HARUTUNIAN ENGINEERING INCORPORATED
TEXAS FIRM REGISTRATION NUMBER F-2408
ENGINEERING AND ENVIRONMENTAL CONSULTANTS
8100 CROSS PARK DRIVE
AUSTIN, TEXAS 78754

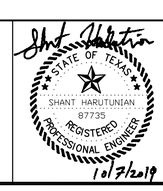

DESIGNED BY:	HEI
CHECKED BY:	HEI
APPROVED BY:	HEI
SUBMITTAL DATE:	OCTOBER 2019
SCALE:	AS SHOWN

SOUTH AUSTIN REGIONAL WASTEWATER TREATMENT PLANT
ELECTRICAL SUBSTATION NO. 1 REPLACEMENT PROJECT
CIP I.D.# 3333.032

ELECTRICAL SUBSTATION NO. 2
SUB2-SWGR-1L TIE BREAKER "VCB-1L06"
CONTROL LOGIC – EXISTING

PROJECT NO: 2014-300 | SHT. 700 OF 866 | DWG NO. SUB2-E-017

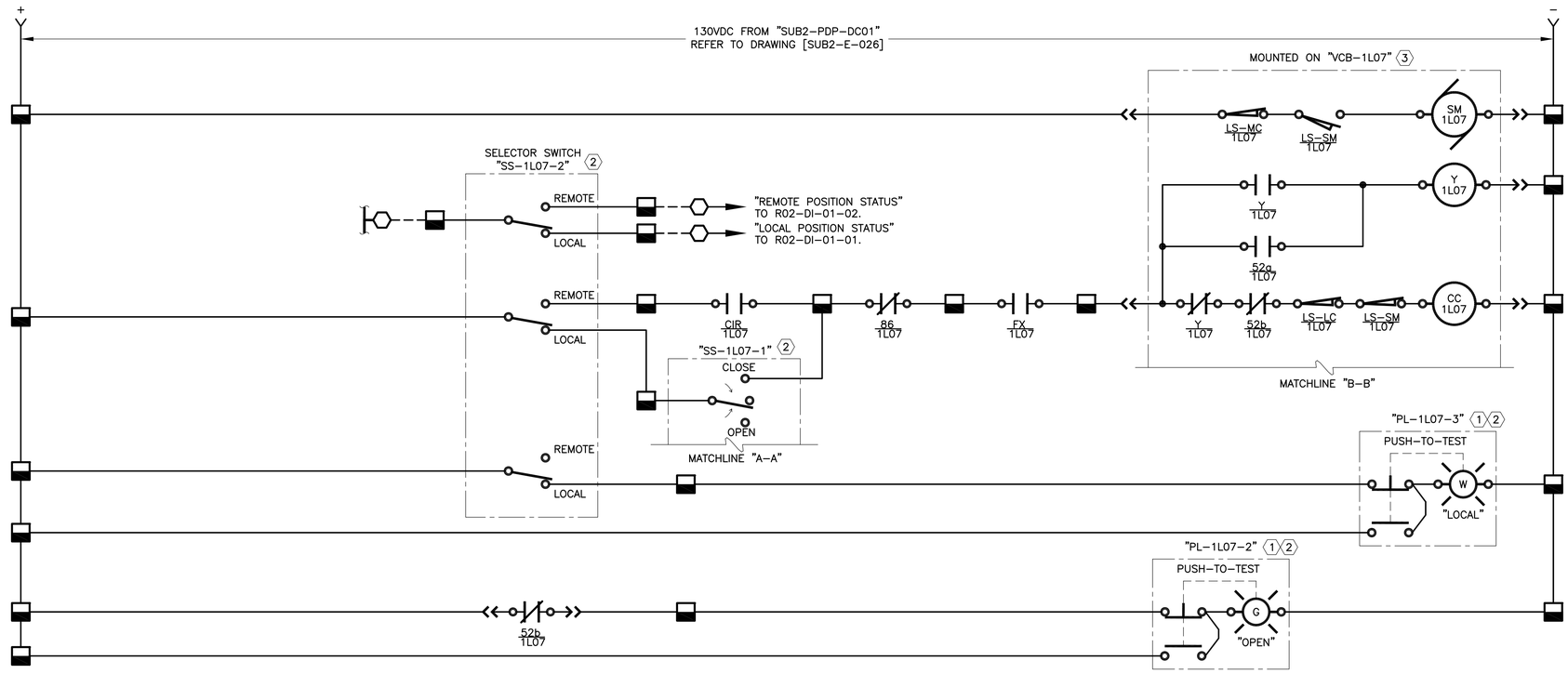

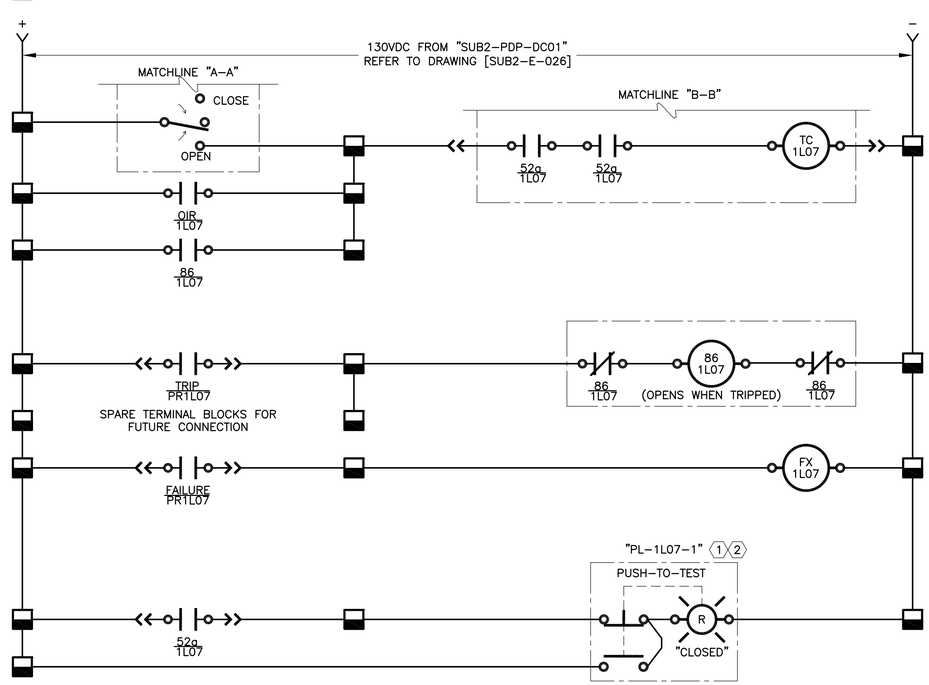

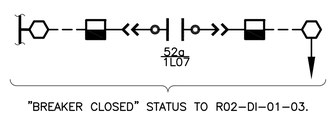

"BREAKER CLOSED" STATUS TO R02-DI-01-03.

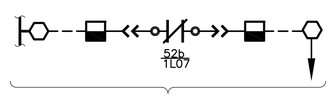

"BREAKER OPEN" STATUS TO R02-DI-01-04.

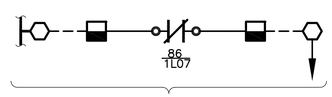

"LOCKOUT" STATUS TO R02-DI-01-05.

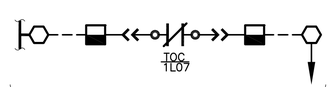

"BREAKER TRUCK POSITION"
STATUS TO R02-DI-01-07.

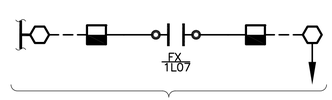

"PROTECTIVE RELAY FAILURE"
STATUS TO R02-DI-01-06.

CONTROL LOGIC DEVICE LEGEND:

52a	BREAKER MOUNTED AUXILIARY CONTACT – OPEN WHEN BREAKER IS OPEN
52b	BREAKER MOUNTED AUXILIARY CONTACT – CLOSED WHEN BREAKER IS OPEN
52MOC	MECHANISM OPERATED CELL SWITCH – OPERATES AS AUXILIARY CONTACT WHEN BREAKER IS IN CONNECTED OR TEST POSITION
LS-MC	SPRING MOTOR CUTOFF SWITCH – OPEN WHEN BREAKER IS RACKED OUT
LS-SM	SPRING MOTOR LIMIT SWITCH – SHOWN WITH SPRINGS CHARGED – CHANGES STATES WHEN SPRING IS DISCHARGED
LS-LC	LATCH CHECK SWITCH – OPENS WHEN TRIP LATCH MOVES OUT OF ITS NORMAL POSITION
SM	SPRING CHARGING MOTOR
Y	ANTI-PUMP RELAY – PREVENTS ENERGIZATION OF CLOSE COIL WHEN ENERGIZED
CC	BREAKER CLOSE COIL – CLOSES BREAKER WHEN ENERGIZED
TC	BREAKER TRIP COIL – OPENS BREAKER WHEN ENERGIZED
86	PROTECTIVE RELAY TRIP LOCKOUT RELAY – MANUAL RESET
FX	PROTECTIVE RELAY FAILURE AUXILIARY RELAY – ENERGIZED WHEN PROTECTIVE RELAY STATUS IS OK
XX	PROTECTIVE RELAY XFER AUXILIARY RELAY
TOC	TRUCK OPERATED CONTACT – CONTACTS SHOWN WITH BREAKER RACKED OUT
SX	SYNC ENABLE AUXILIARY RELAY
S2L1PX	SUBSTATION MANAGEMENT RELAY PERMISSIVE OUTPUT AUXILIARY RELAY
S2L2PX	SUBSTATION MANAGEMENT RELAY PERMISSIVE OUTPUT AUXILIARY RELAY
PRMSV	BREAKER CLOSE PERMISSIVE AUXILIARY RELAY

KEY NOTES:

1. INDICATING PILOT LIGHT WITH INTEGRAL MOMENTARY ACTION "PUSH-TO-TEST" PUSH BUTTON.
2. MOUNTED ON FRONT OF PROPOSED SWITCHGEAR "SUB2-SWGR-1L" SECTION 1L07A.
3. MEDIUM VOLTAGE CIRCUIT BREAKER IS NOT INSTALLED IN THIS SECTION. SHOWN HERE FOR CLARITY.

BAR LENGTH ON ORIGINAL DRAWING EQUALS ONE INCH, ADJUST SCALE ACCORDINGLY.

REUSE OF DOCUMENTS

This document, and the designs incorporated herein, is an instrument of professional service that has been developed, designed and prepared by Harutunian Engineering, Inc., and is not to be used, in whole or in part, for any other project without giving written notice to Harutunian Engineering, Inc.

NO.	DATE:	DESCRIPTION

HARUTUNIAN ENGINEERING INCORPORATED
TEXAS FIRM REGISTRATION NUMBER F-2408
ENGINEERING AND ENVIRONMENTAL CONSULTANTS
8100 CROSS PARK DRIVE
AUSTIN, TEXAS 78754

STATE OF TEXAS
SHANT HARUTUNIAN
87735
REGISTERED
PROFESSIONAL ENGINEER
10/7/2019

DESIGNED BY:	HEI
CHECKED BY:	HEI
APPROVED BY:	HEI
SUBMITTAL DATE:	OCTOBER 2019
SCALE:	AS SHOWN

SOUTH AUSTIN REGIONAL WASTEWATER TREATMENT PLANT
ELECTRICAL SUBSTATION NO. 1 REPLACEMENT PROJECT
CIP I.D.# 3333.032

ELECTRICAL SUBSTATION NO. 2
SUB2-SWGR-1L FEEDER BREAKER "VCB-1L07"
CONTROL LOGIC – EXISTING

PROJECT NO: 2014-300 | SHT. 701 OF 866 | DWG NO. SUB2-E-018

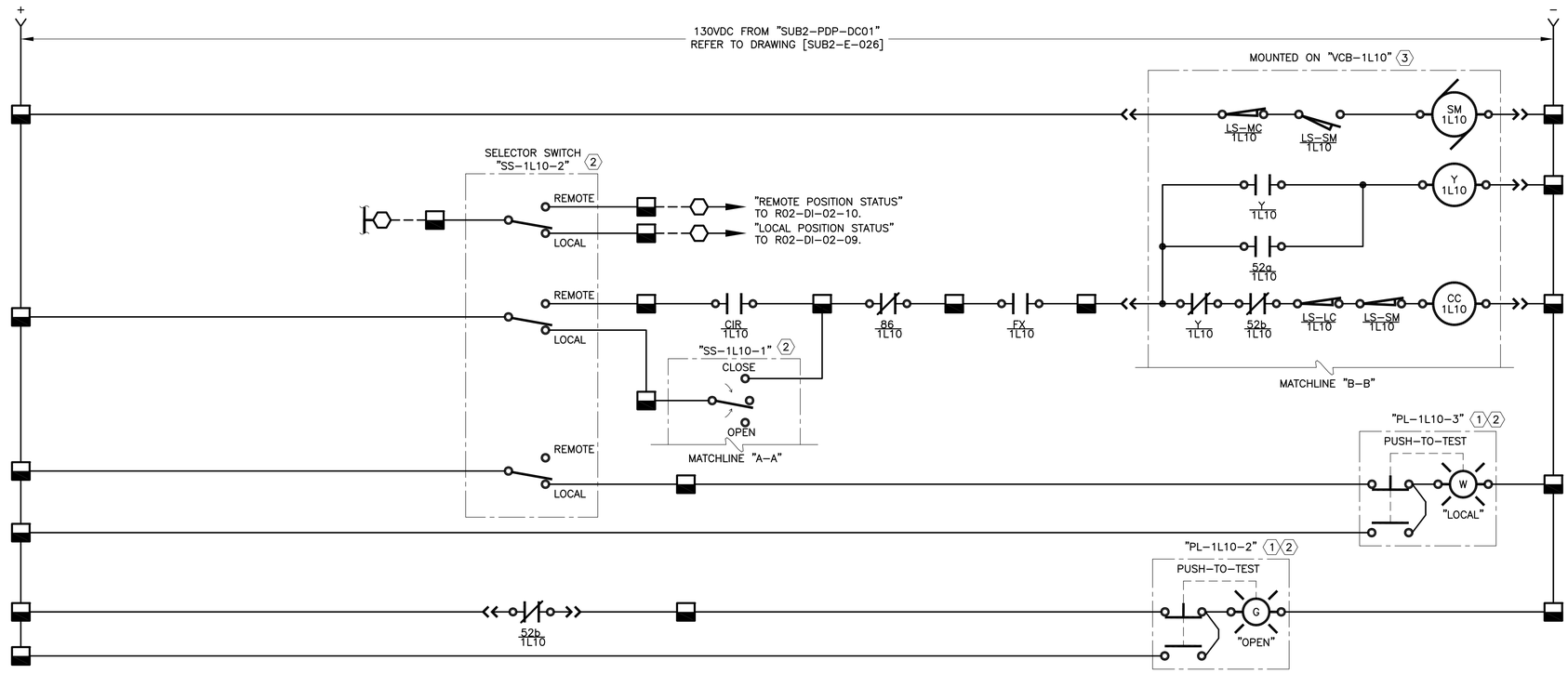

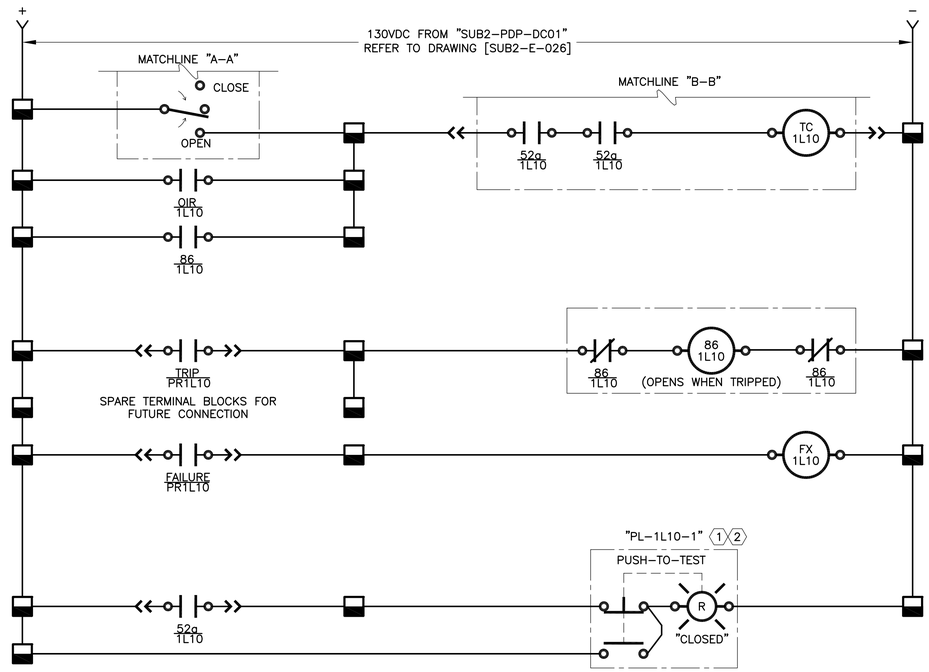

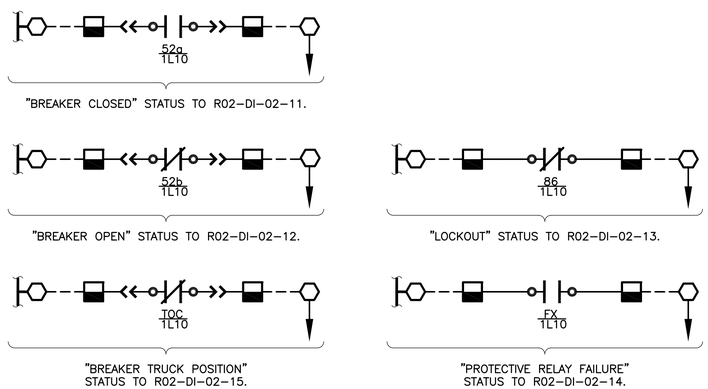

CONTROL LOGIC DEVICE LEGEND:

52a	BREAKER MOUNTED AUXILIARY CONTACT – OPEN WHEN BREAKER IS OPEN
52b	BREAKER MOUNTED AUXILIARY CONTACT – CLOSED WHEN BREAKER IS OPEN
52MOC	MECHANISM OPERATED CELL SWITCH – OPERATES AS AUXILIARY CONTACT WHEN BREAKER IS IN CONNECTED OR TEST POSITION
LS-MC	SPRING MOTOR CUTOFF SWITCH – OPEN WHEN BREAKER IS RACKED OUT
LS-SM	SPRING MOTOR LIMIT SWITCH – SHOWN WITH SPRINGS CHARGED – CHANGES STATES WHEN SPRING IS DISCHARGED
LS-LC	LATCH CHECK SWITCH – OPENS WHEN TRIP LATCH MOVES OUT OF ITS NORMAL POSITION
SM	SPRING CHARGING MOTOR
Y	ANTI-PUMP RELAY – PREVENTS ENERGIZATION OF CLOSE COIL WHEN ENERGIZED
CC	BREAKER CLOSE COIL – CLOSES BREAKER WHEN ENERGIZED
TC	BREAKER TRIP COIL – OPENS BREAKER WHEN ENERGIZED
86	PROTECTIVE RELAY TRIP LOCKOUT RELAY – MANUAL RESET
FX	PROTECTIVE RELAY FAILURE AUXILIARY RELAY – ENERGIZED WHEN PROTECTIVE RELAY STATUS IS OK
XX	PROTECTIVE RELAY XFER AUXILIARY RELAY
TOC	TRUCK OPERATED CONTACT – CONTACTS SHOWN WITH BREAKER RACKED OUT
SX	SYNC ENABLE AUXILIARY RELAY
S2L1PX	SUBSTATION MANAGEMENT RELAY PERMISSIVE OUTPUT AUXILIARY RELAY
S2L2PX	SUBSTATION MANAGEMENT RELAY PERMISSIVE OUTPUT AUXILIARY RELAY
PRMSV	BREAKER CLOSE PERMISSIVE AUXILIARY RELAY

KEY NOTES:

(1) INDICATING PILOT LIGHT WITH INTEGRAL MOMENTARY ACTION "PUSH-TO-TEST" PUSH BUTTON.

(2) MOUNTED ON FRONT OF PROPOSED SWITCHGEAR "SUB2-SWGR-1L" SECTION 1L10A.

(3) MEDIUM VOLTAGE CIRCUIT BREAKER IS NOT INSTALLED IN THIS SECTION. SHOWN HERE FOR CLARITY.

BAR LENGTH ON ORIGINAL DRAWING EQUALS ONE INCH, ADJUST SCALE ACCORDINGLY.

REUSE OF DOCUMENTS

This document, and the designs incorporated herein, is an instrument of professional service that has been developed, designed and prepared by Harutunian Engineering, Inc., and is not to be used, in whole or in part, for any other project without giving written notice to Harutunian Engineering, Inc.

NO.	DATE:	DESCRIPTION

HARUTUNIAN ENGINEERING INCORPORATED
TEXAS FIRM REGISTRATION NUMBER F-2408
ENGINEERING AND ENVIRONMENTAL CONSULTANTS
8100 CROSS PARK DRIVE
AUSTIN, TEXAS 78754

STATE OF TEXAS
SHANT HARUTUNIAN
87735
REGISTERED
PROFESSIONAL ENGINEER
10/7/2019

DESIGNED BY:	HEI
CHECKED BY:	HEI
APPROVED BY:	HEI
SUBMITTAL DATE:	OCTOBER 2019
SCALE:	AS SHOWN

SOUTH AUSTIN REGIONAL WASTEWATER TREATMENT PLANT
ELECTRICAL SUBSTATION NO. 1 REPLACEMENT PROJECT
CIP I.D.# 3333.032

ELECTRICAL SUBSTATION NO. 2
SUB2-SWGR-1L FEEDER BREAKER "VCB-1L10"
CONTROL LOGIC – EXISTING

PROJECT NO: 2014-300 | SHT. 702 OF 866 | DWG NO. SUB2-E-019

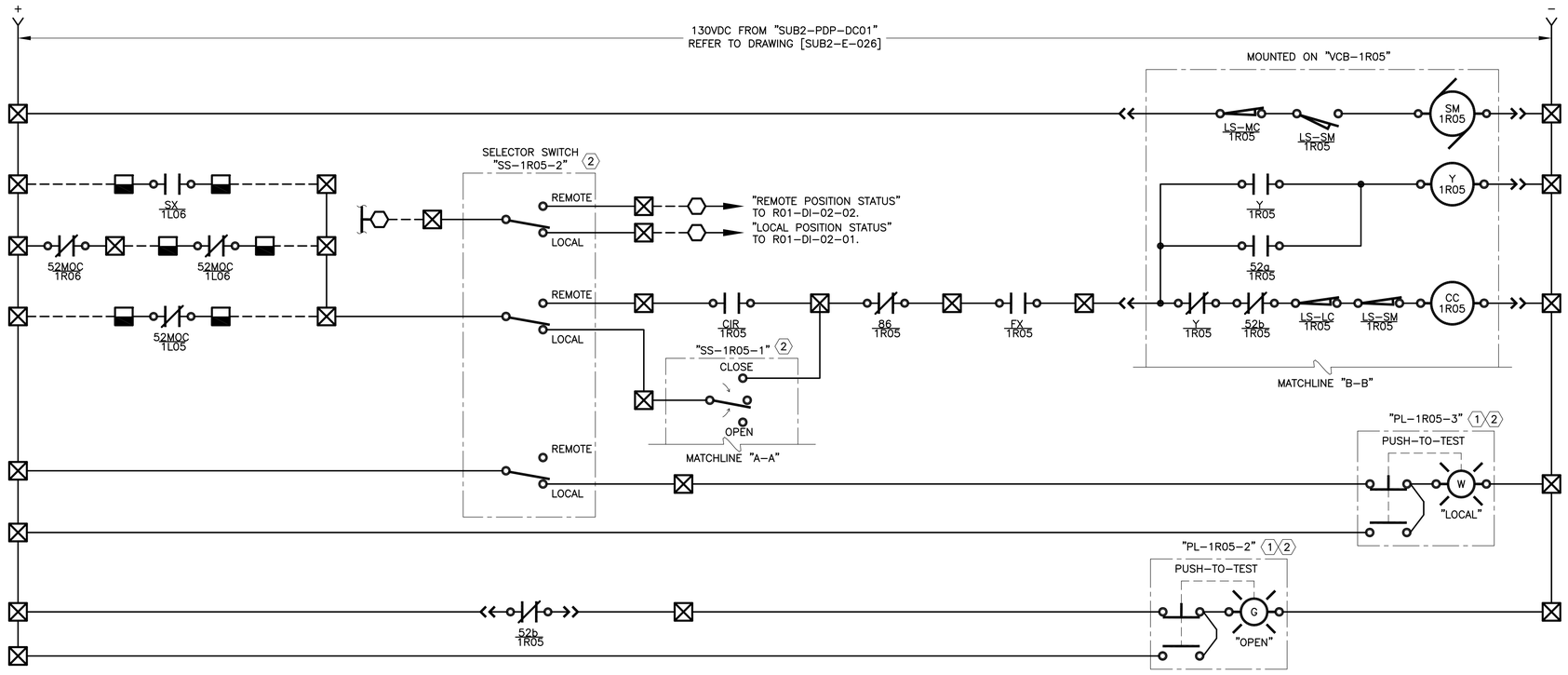

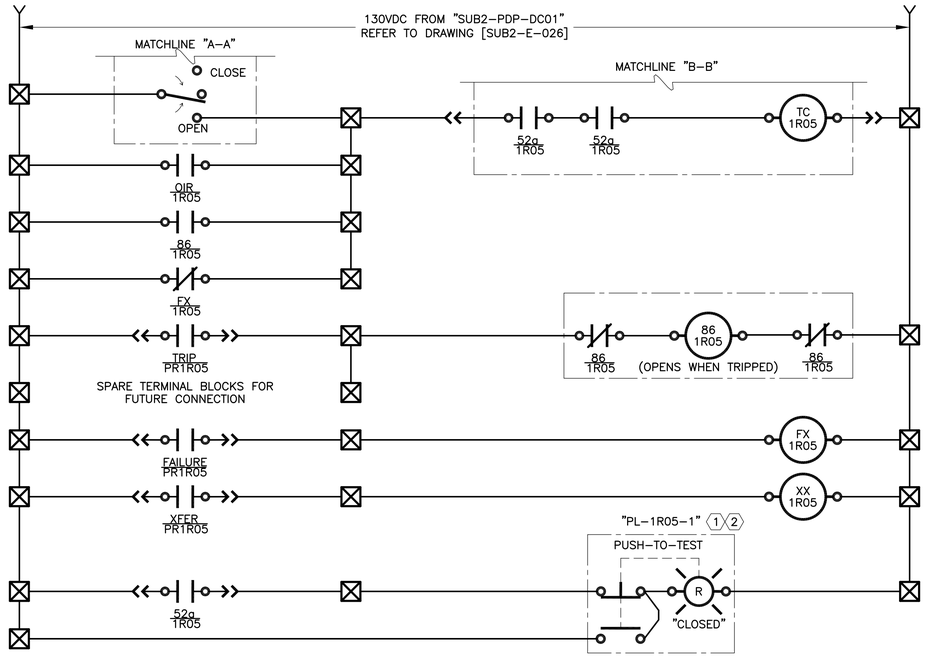

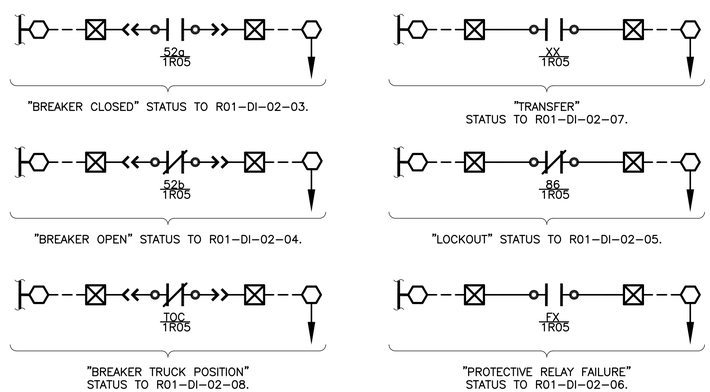

CONTROL LOGIC DEVICE LEGEND:

52a	BREAKER MOUNTED AUXILIARY CONTACT – OPEN WHEN BREAKER IS OPEN
52b	BREAKER MOUNTED AUXILIARY CONTACT – CLOSED WHEN BREAKER IS OPEN
52MOC	MECHANISM OPERATED CELL SWITCH – OPERATES AS AUXILIARY CONTACT WHEN BREAKER IS IN CONNECTED OR TEST POSITION
LS-MC	SPRING MOTOR CUTOFF SWITCH – OPEN WHEN BREAKER IS RACKED OUT
LS-SM	SPRING MOTOR LIMIT SWITCH – SHOWN WITH SPRINGS CHARGED – CHANGES STATES WHEN SPRING IS DISCHARGED
LS-LC	LATCH CHECK SWITCH – OPENS WHEN TRIP LATCH MOVES OUT OF ITS NORMAL POSITION
SM	SPRING CHARGING MOTOR
Y	ANTI-PUMP RELAY – PREVENTS ENERGIZATION OF CLOSE COIL WHEN ENERGIZED
CC	BREAKER CLOSE COIL – CLOSES BREAKER WHEN ENERGIZED
TC	BREAKER TRIP COIL – OPENS BREAKER WHEN ENERGIZED
86	PROTECTIVE RELAY TRIP LOCKOUT RELAY – MANUAL RESET
FX	PROTECTIVE RELAY FAILURE AUXILIARY RELAY – ENERGIZED WHEN PROTECTIVE RELAY STATUS IS OK
XX	PROTECTIVE RELAY XFER AUXILIARY RELAY
TOC	TRUCK OPERATED CONTACT – CONTACTS SHOWN WITH BREAKER RACKED OUT
SX	SYNC ENABLE AUXILIARY RELAY
S2L1PX	SUBSTATION MANAGEMENT RELAY PERMISSIVE OUTPUT AUXILIARY RELAY
S2L2PX	SUBSTATION MANAGEMENT RELAY PERMISSIVE OUTPUT AUXILIARY RELAY
PRMSV	BREAKER CLOSE PERMISSIVE AUXILIARY RELAY

KEY NOTES:

(1) INDICATING PILOT LIGHT WITH INTEGRAL MOMENTARY ACTION "PUSH-TO-TEST" PUSH BUTTON.

(2) MOUNTED ON FRONT OF PROPOSED SWITCHGEAR "SUB2-SWGR-1R" SECTION 1R05A.

BAR LENGTH ON ORIGINAL DRAWING EQUALS ONE INCH, ADJUST SCALE ACCORDINGLY.

REUSE OF DOCUMENTS

This document, and the designs incorporated herein, is an instrument of professional service that has been developed, designed and prepared by Harutunian Engineering, Inc., and is not to be used, in whole or in part, for any other project without giving written notice to Harutunian Engineering, Inc.

NO.	DATE:	DESCRIPTION

HARUTUNIAN ENGINEERING INCORPORATED
TEXAS FIRM REGISTRATION NUMBER F-2408
ENGINEERING AND ENVIRONMENTAL CONSULTANTS
8100 CROSS PARK DRIVE
AUSTIN, TEXAS 78754

STATE OF TEXAS · SHANT HARUTUNIAN · 87735 · REGISTERED PROFESSIONAL ENGINEER · 10/7/2019

DESIGNED BY:	HEI
CHECKED BY:	HEI
APPROVED BY:	HEI
SUBMITTAL DATE:	OCTOBER 2019
SCALE:	AS SHOWN

SOUTH AUSTIN REGIONAL WASTEWATER TREATMENT PLANT
ELECTRICAL SUBSTATION NO. 1 REPLACEMENT PROJECT
CIP I.D.# 3333.032

ELECTRICAL SUBSTATION NO. 2
SUB2-SWGR-1R MAIN BREAKER "VCB-1R05"
CONTROL LOGIC – EXISTING

PROJECT NO: 2014-300 | SHT. 703 OF 866 | DWG NO. SUB2-E-020

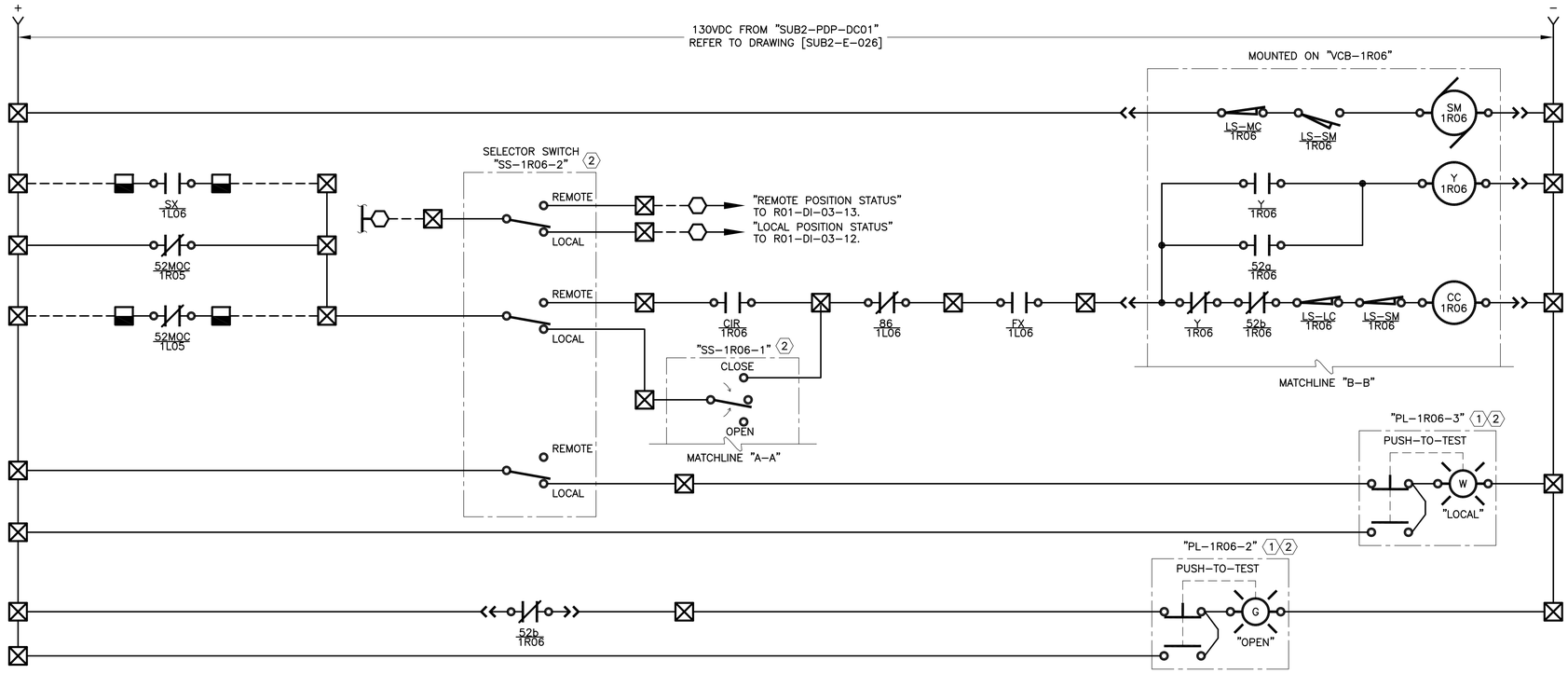

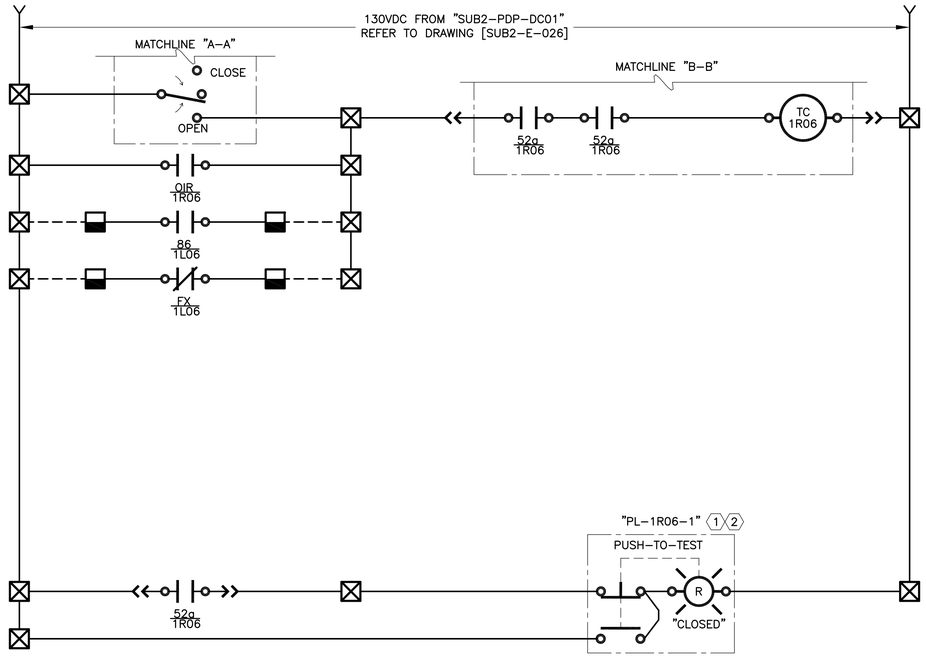

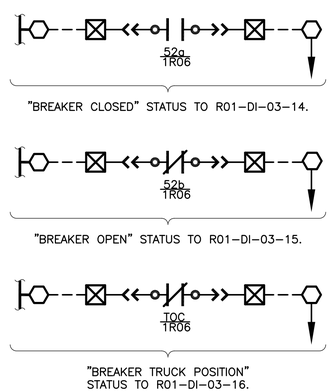

CONTROL LOGIC DEVICE LEGEND:

52a	BREAKER MOUNTED AUXILIARY CONTACT – OPEN WHEN BREAKER IS OPEN
52b	BREAKER MOUNTED AUXILIARY CONTACT – CLOSED WHEN BREAKER IS OPEN
52MOC	MECHANISM OPERATED CELL SWITCH – OPERATES AS AUXILIARY CONTACT WHEN BREAKER IS IN CONNECTED OR TEST POSITION
LS-MC	SPRING MOTOR CUTOFF SWITCH – OPEN WHEN BREAKER IS RACKED OUT
LS-SM	SPRING MOTOR LIMIT SWITCH – SHOWN WITH SPRINGS CHARGED – CHANGES STATES WHEN SPRING IS DISCHARGED
LS-LC	LATCH CHECK SWITCH – OPENS WHEN TRIP LATCH MOVES OUT OF ITS NORMAL POSITION
SM	SPRING CHARGING MOTOR
Y	ANTI-PUMP RELAY – PREVENTS ENERGIZATION OF CLOSE COIL WHEN ENERGIZED
CC	BREAKER CLOSE COIL – CLOSES BREAKER WHEN ENERGIZED
TC	BREAKER TRIP COIL – OPENS BREAKER WHEN ENERGIZED
86	PROTECTIVE RELAY TRIP LOCKOUT RELAY – MANUAL RESET
FX	PROTECTIVE RELAY FAILURE AUXILIARY RELAY – ENERGIZED WHEN PROTECTIVE RELAY STATUS IS OK
XX	PROTECTIVE RELAY XFER AUXILIARY RELAY
TOC	TRUCK OPERATED CONTACT – CONTACTS SHOWN WITH BREAKER RACKED OUT
SX	SYNC ENABLE AUXILIARY RELAY
S2L1PX	SUBSTATION MANAGEMENT RELAY PERMISSIVE OUTPUT AUXILIARY RELAY
S2L2PX	SUBSTATION MANAGEMENT RELAY PERMISSIVE OUTPUT AUXILIARY RELAY
PRMSV	BREAKER CLOSE PERMISSIVE AUXILIARY RELAY

KEY NOTES:

(1) INDICATING PILOT LIGHT WITH INTEGRAL MOMENTARY ACTION "PUSH-TO-TEST" PUSH BUTTON.

(2) MOUNTED ON FRONT OF PROPOSED SWITCHGEAR "SUB2-SWGR-1R" SECTION 1R06A.

BAR LENGTH ON ORIGINAL DRAWING EQUALS ONE INCH, ADJUST SCALE ACCORDINGLY.

REUSE OF DOCUMENTS

This document, and the designs incorporated herein, is an instrument of professional service that has been developed, designed and prepared by Harutunian Engineering, Inc., and is not to be used, in whole or in part, for any other project without giving written notice to Harutunian Engineering, Inc.

NO.	DATE:	DESCRIPTION

HARUTUNIAN ENGINEERING INCORPORATED
TEXAS FIRM REGISTRATION NUMBER F-2408
ENGINEERING AND ENVIRONMENTAL CONSULTANTS
8100 CROSS PARK DRIVE
AUSTIN, TEXAS 78754

STATE OF TEXAS
SHANT HARUTUNIAN
87735
REGISTERED
PROFESSIONAL ENGINEER
10/7/2019

DESIGNED BY:	HEI
CHECKED BY:	HEI
APPROVED BY:	HEI
SUBMITTAL DATE:	OCTOBER 2019
SCALE:	AS SHOWN

SOUTH AUSTIN REGIONAL WASTEWATER TREATMENT PLANT
ELECTRICAL SUBSTATION NO. 1 REPLACEMENT PROJECT
CIP I.D.# 3333.032

ELECTRICAL SUBSTATION NO. 2
SUB2-SWGR-1R TIE BREAKER "VCB-1R06"
CONTROL LOGIC – EXISTING

PROJECT NO: 2014-300 | SHT. 704 OF 866 | DWG NO. SUB2-E-021

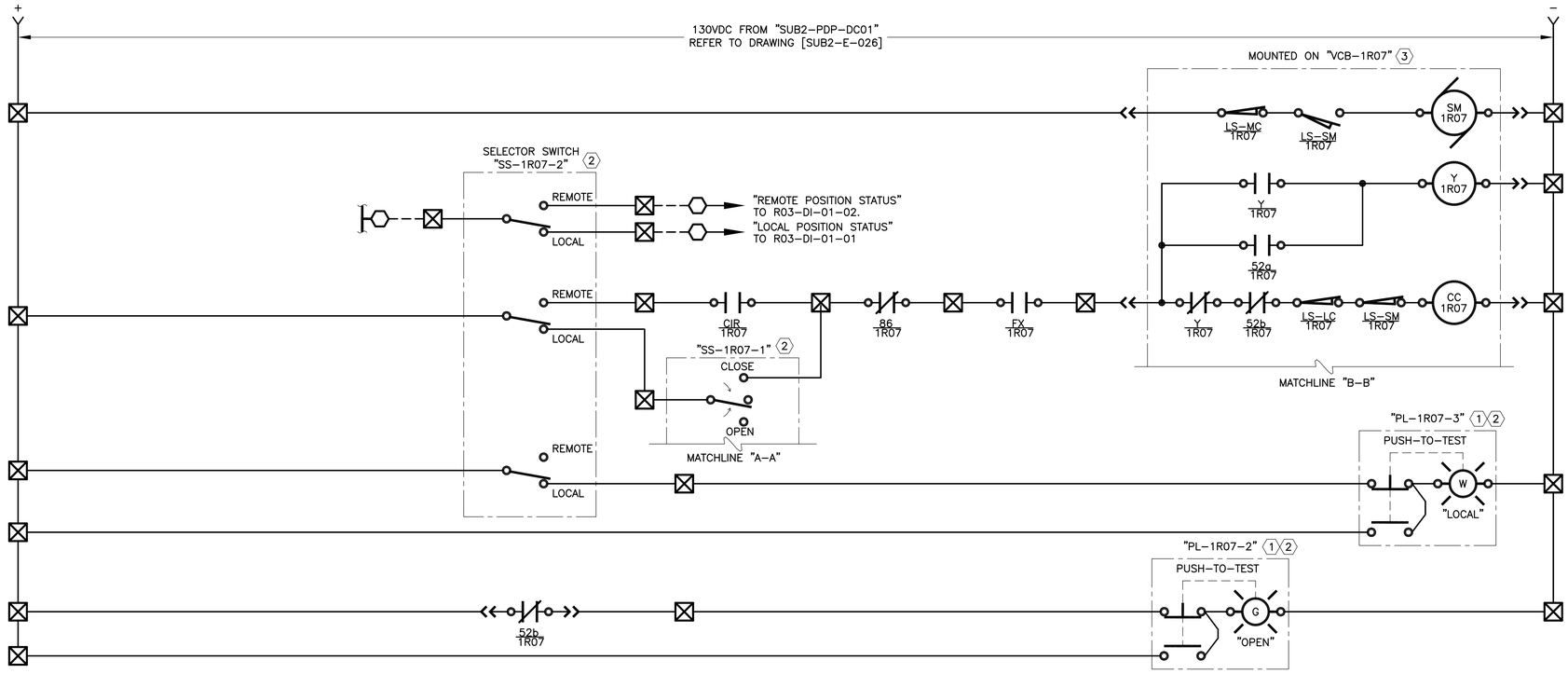

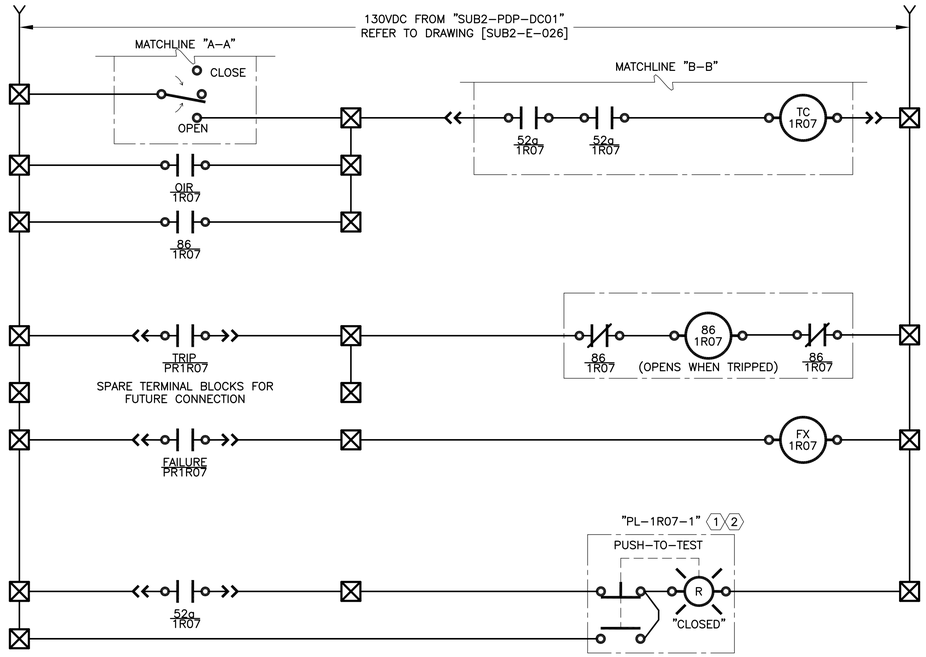

CONTROL LOGIC DEVICE LEGEND:

52a	BREAKER MOUNTED AUXILIARY CONTACT – OPEN WHEN BREAKER IS OPEN
52b	BREAKER MOUNTED AUXILIARY CONTACT – CLOSED WHEN BREAKER IS OPEN
52MOC	MECHANISM OPERATED CELL SWITCH – OPERATES AS AUXILIARY CONTACT WHEN BREAKER IS IN CONNECTED OR TEST POSITION
LS-MC	SPRING MOTOR CUTOFF SWITCH – OPEN WHEN BREAKER IS RACKED OUT
LS-SM	SPRING MOTOR LIMIT SWITCH – SHOWN WITH SPRINGS CHARGED – CHANGES STATES WHEN SPRING IS DISCHARGED
LS-LC	LATCH CHECK SWITCH – OPENS WHEN TRIP LATCH MOVES OUT OF ITS NORMAL POSITION
SM	SPRING CHARGING MOTOR
Y	ANTI-PUMP RELAY – PREVENTS ENERGIZATION OF CLOSE COIL WHEN ENERGIZED
CC	BREAKER CLOSE COIL – CLOSES BREAKER WHEN ENERGIZED
TC	BREAKER TRIP COIL – OPENS BREAKER WHEN ENERGIZED
86	PROTECTIVE RELAY TRIP LOCKOUT RELAY – MANUAL RESET
FX	PROTECTIVE RELAY FAILURE AUXILIARY RELAY – ENERGIZED WHEN PROTECTIVE RELAY STATUS IS OK
XX	PROTECTIVE RELAY XFER AUXILIARY RELAY
TOC	TRUCK OPERATED CONTACT – CONTACTS SHOWN WITH BREAKER RACKED OUT
SX	SYNC ENABLE AUXILIARY RELAY
S2L1PX	SUBSTATION MANAGEMENT RELAY PERMISSIVE OUTPUT AUXILIARY RELAY
S2L2PX	SUBSTATION MANAGEMENT RELAY PERMISSIVE OUTPUT AUXILIARY RELAY
PRMSV	BREAKER CLOSE PERMISSIVE AUXILIARY RELAY

KEY NOTES:

(1) INDICATING PILOT LIGHT WITH INTEGRAL MOMENTARY ACTION "PUSH-TO-TEST" PUSH BUTTON.

(2) MOUNTED ON FRONT OF PROPOSED SWITCHGEAR "SUB2-SWGR-1R" SECTION 1R07A.

(3) MEDIUM VOLTAGE CIRCUIT BREAKER IS NOT INSTALLED IN THIS SECTION. SHOWN HERE FOR CLARITY.

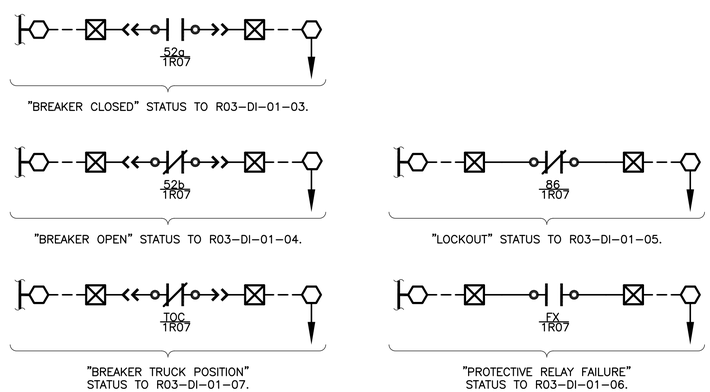

BAR LENGTH ON ORIGINAL DRAWING EQUALS ONE INCH, ADJUST SCALE ACCORDINGLY.

REUSE OF DOCUMENTS

This document, and the designs incorporated herein, is an instrument of professional service that has been developed, designed and prepared by Harutunian Engineering, Inc., and is not to be used, in whole or in part, for any other project without giving written notice to Harutunian Engineering, Inc.

NO.	DATE:	DESCRIPTION

HARUTUNIAN ENGINEERING INCORPORATED
TEXAS FIRM REGISTRATION NUMBER F-2408
ENGINEERING AND ENVIRONMENTAL CONSULTANTS
8100 CROSS PARK DRIVE
AUSTIN, TEXAS 78754

STATE OF TEXAS
SHANT HARUTUNIAN
87735
REGISTERED
PROFESSIONAL ENGINEER
10/7/2019

DESIGNED BY:	HEI
CHECKED BY:	HEI
APPROVED BY:	HEI
SUBMITTAL DATE:	OCTOBER 2019
SCALE:	AS SHOWN

SOUTH AUSTIN REGIONAL WASTEWATER TREATMENT PLANT
ELECTRICAL SUBSTATION NO. 1 REPLACEMENT PROJECT
CIP I.D.# 3333.032

ELECTRICAL SUBSTATION NO. 2
SUB2-SWGR-1R FEEDER BREAKER "VCB-1R07"
CONTROL LOGIC – EXISTING

PROJECT NO: 2014-300 | SHT. 705 OF 866 | DWG NO. SUB2-E-022

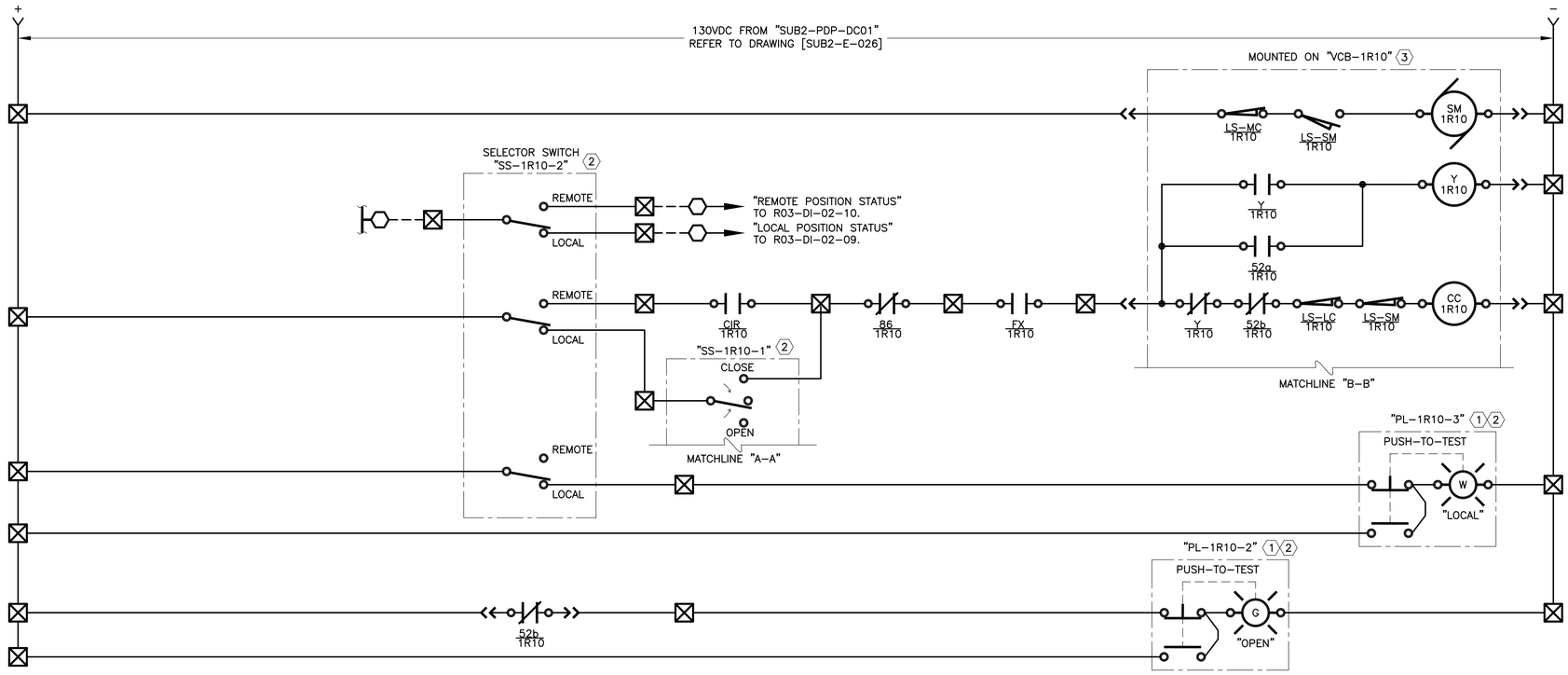

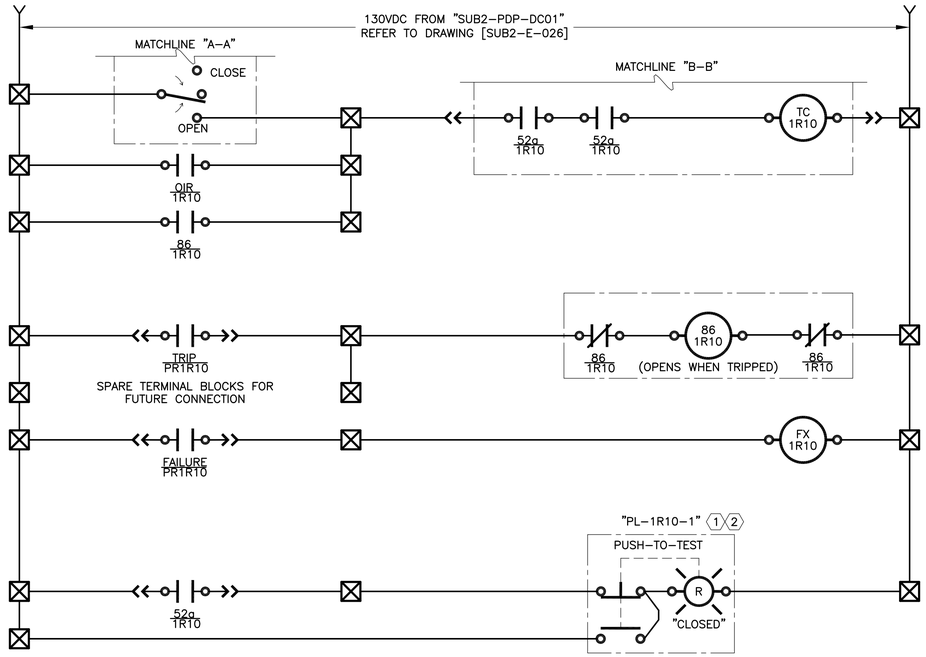

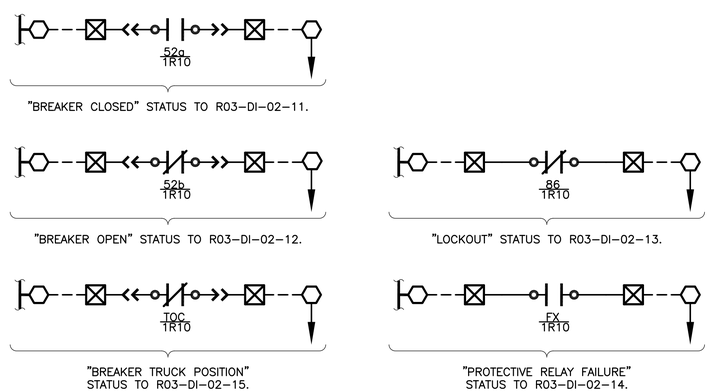

CONTROL LOGIC DEVICE LEGEND:

52a	BREAKER MOUNTED AUXILIARY CONTACT – OPEN WHEN BREAKER IS OPEN
52b	BREAKER MOUNTED AUXILIARY CONTACT – CLOSED WHEN BREAKER IS OPEN
52MOC	MECHANISM OPERATED CELL SWITCH – OPERATES AS AUXILIARY CONTACT WHEN BREAKER IS IN CONNECTED OR TEST POSITION
LS-MC	SPRING MOTOR CUTOFF SWITCH – OPEN WHEN BREAKER IS RACKED OUT
LS-SM	SPRING MOTOR LIMIT SWITCH – SHOWN WITH SPRINGS CHARGED – CHANGES STATES WHEN SPRING IS DISCHARGED
LS-LC	LATCH CHECK SWITCH – OPENS WHEN TRIP LATCH MOVES OUT OF ITS NORMAL POSITION
SM	SPRING CHARGING MOTOR
Y	ANTI-PUMP RELAY – PREVENTS ENERGIZATION OF CLOSE COIL WHEN ENERGIZED
CC	BREAKER CLOSE COIL – CLOSES BREAKER WHEN ENERGIZED
TC	BREAKER TRIP COIL – OPENS BREAKER WHEN ENERGIZED
86	PROTECTIVE RELAY TRIP LOCKOUT RELAY – MANUAL RESET
FX	PROTECTIVE RELAY FAILURE AUXILIARY RELAY – ENERGIZED WHEN PROTECTIVE RELAY STATUS IS OK
XX	PROTECTIVE RELAY XFER AUXILIARY RELAY
TOC	TRUCK OPERATED CONTACT – CONTACTS SHOWN WITH BREAKER RACKED OUT
SX	SYNC ENABLE AUXILIARY RELAY
S2L1PX	SUBSTATION MANAGEMENT RELAY PERMISSIVE OUTPUT AUXILIARY RELAY
S2L2PX	SUBSTATION MANAGEMENT RELAY PERMISSIVE OUTPUT AUXILIARY RELAY
PRMSV	BREAKER CLOSE PERMISSIVE AUXILIARY RELAY

KEY NOTES:

(1) INDICATING PILOT LIGHT WITH INTEGRAL MOMENTARY ACTION "PUSH-TO-TEST" PUSH BUTTON.

(2) MOUNTED ON FRONT OF PROPOSED SWITCHGEAR "SUB2-SWGR-1R" SECTION 1R10A.

(3) MEDIUM VOLTAGE CIRCUIT BREAKER IS NOT INSTALLED IN THIS SECTION. SHOWN HERE FOR CLARITY.

BAR LENGTH ON ORIGINAL DRAWING EQUALS ONE INCH, ADJUST SCALE ACCORDINGLY.

REUSE OF DOCUMENTS

This document, and the designs incorporated herein, is an instrument of professional service that has been developed, designed and prepared by Harutunian Engineering, Inc., and is not to be used, in whole or in part, for any other project without giving written notice to Harutunian Engineering, Inc.

NO.	DATE:	DESCRIPTION

HARUTUNIAN ENGINEERING INCORPORATED
TEXAS FIRM REGISTRATION NUMBER F-2408
ENGINEERING AND ENVIRONMENTAL CONSULTANTS
8100 CROSS PARK DRIVE
AUSTIN, TEXAS 78754

STATE OF TEXAS
SHANT HARUTUNIAN
87735
REGISTERED
PROFESSIONAL ENGINEER
10/7/2019

DESIGNED BY:	HEI
CHECKED BY:	HEI
APPROVED BY:	HEI
SUBMITTAL DATE:	OCTOBER 2019
SCALE:	AS SHOWN

SOUTH AUSTIN REGIONAL WASTEWATER TREATMENT PLANT
ELECTRICAL SUBSTATION NO. 1 REPLACEMENT PROJECT
CIP I.D.# 3333.032

ELECTRICAL SUBSTATION NO. 2
SUB2-SWGR-1R FEEDER BREAKER "VCB-1R10"
CONTROL LOGIC – EXISTING

PROJECT NO: 2014-300 | SHT. 706 OF 866 | DWG NO. SUB2-E-023

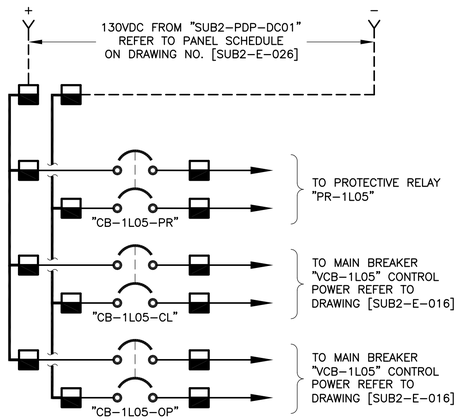

"SUB2-SWGR-1L" MAIN BREAKER
"VCB-1L05" 130VDC SUPPLY POWER
SCALE: N.T.S.

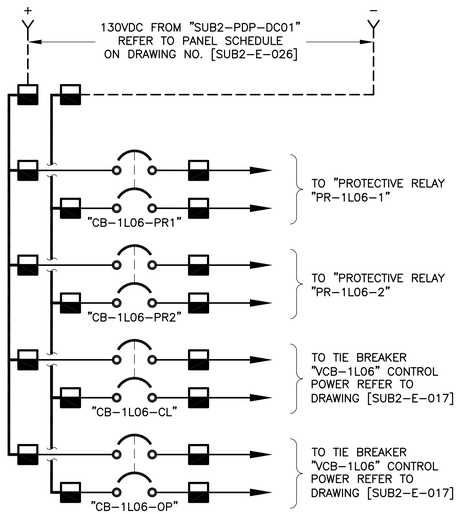

"SUB2-SWGR-1L" TIE BREAKER ①
"VCB-1L06" 130VDC SUPPLY POWER
SCALE: N.T.S.

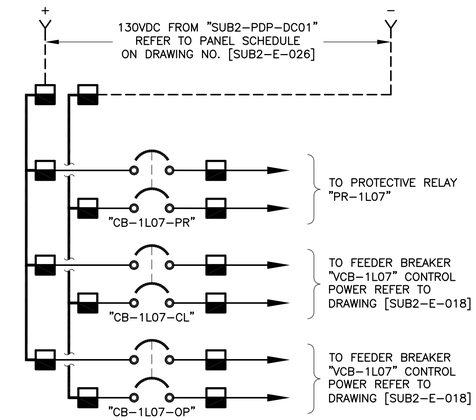

"SUB2-SWGR-1L" FEEDER BREAKER
"VCB-1L07" 130VDC SUPPLY POWER
SCALE: N.T.S.

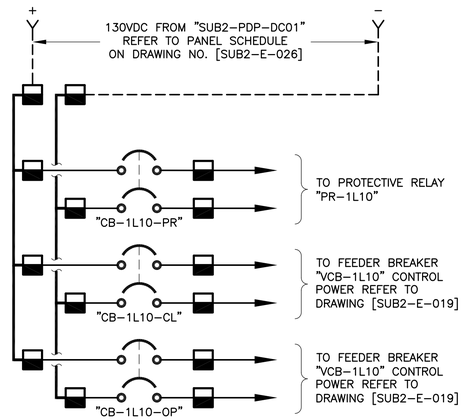

"SUB2-SWGR-1L" FEEDER BREAKER
"VCB-1L10" 130VDC SUPPLY POWER
SCALE: N.T.S.

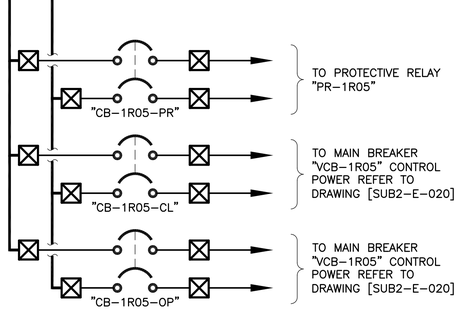

"SUB2-SWGR-1R" MAIN BREAKER
"VCB-1R05" 130VDC SUPPLY POWER
SCALE: N.T.S.

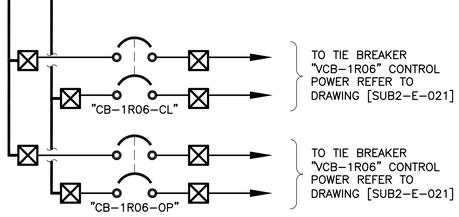

"SUB2-SWGR-1R" TIE BREAKER
"VCB-1R06" 130VDC SUPPLY POWER
SCALE: N.T.S.

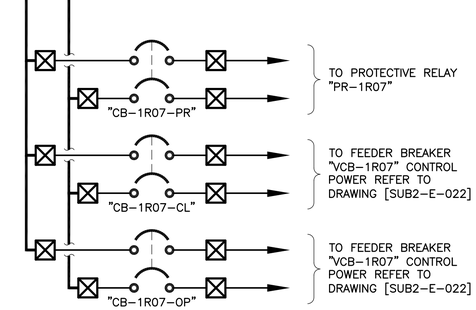

"SUB2-SWGR-1R" FEEDER BREAKER
"VCB-1R07" 130VDC SUPPLY POWER
SCALE: N.T.S.

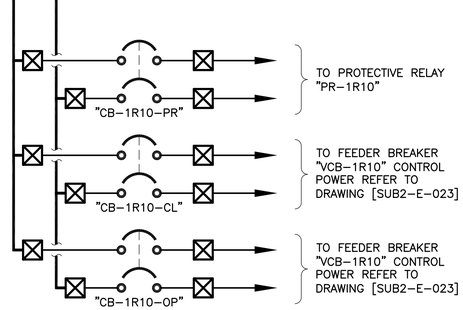

"SUB2-SWGR-1R" FEEDER BREAKER
"VCB-1R10" 130VDC SUPPLY POWER
SCALE: N.T.S.

KEY NOTES:

① RECORD DRAWING WERE INCOMPLETE, FIELD VERIFY PRIOR TO PERFORMING ANY DEMOLITION/RENOVATION ACTIVITIES.

NOTE: DRAWING IS INTENDED FOR REFERENCE PURPOSES ONLY.

BAR LENGTH ON ORIGINAL DRAWING EQUALS ONE INCH, ADJUST SCALE ACCORDINGLY.

REUSE OF DOCUMENTS

This document, and the designs incorporated herein, is an instrument of professional service that has been developed, designed and prepared by Harutunian Engineering, Inc., and is not to be used, in whole or in part, for any other project without giving written notice to Harutunian Engineering, Inc.

NO.	DATE:	DESCRIPTION

HARUTUNIAN ENGINEERING INCORPORATED
TEXAS FIRM REGISTRATION NUMBER F-2408
ENGINEERING AND ENVIRONMENTAL CONSULTANTS
8100 CROSS PARK DRIVE
AUSTIN, TEXAS 78754

STATE OF TEXAS
SHANT HARUTUNIAN
87735
REGISTERED
PROFESSIONAL ENGINEER
10/7/2019

DESIGNED BY:	HEI
CHECKED BY:	HEI
APPROVED BY:	HEI
SUBMITTAL DATE:	OCTOBER 2019
SCALE:	AS SHOWN

SOUTH AUSTIN REGIONAL WASTEWATER TREATMENT PLANT
ELECTRICAL SUBSTATION NO. 1 REPLACEMENT PROJECT
CIP I.D.# 3333.032

SUBSTATION NO. 2
DC BREAKER CONTROL POWER WIRING SCHEMATICS – EXISTING

PROJECT NO: 2014-300 | SHT. 707 OF 866 | DWG NO. SUB2-E-024

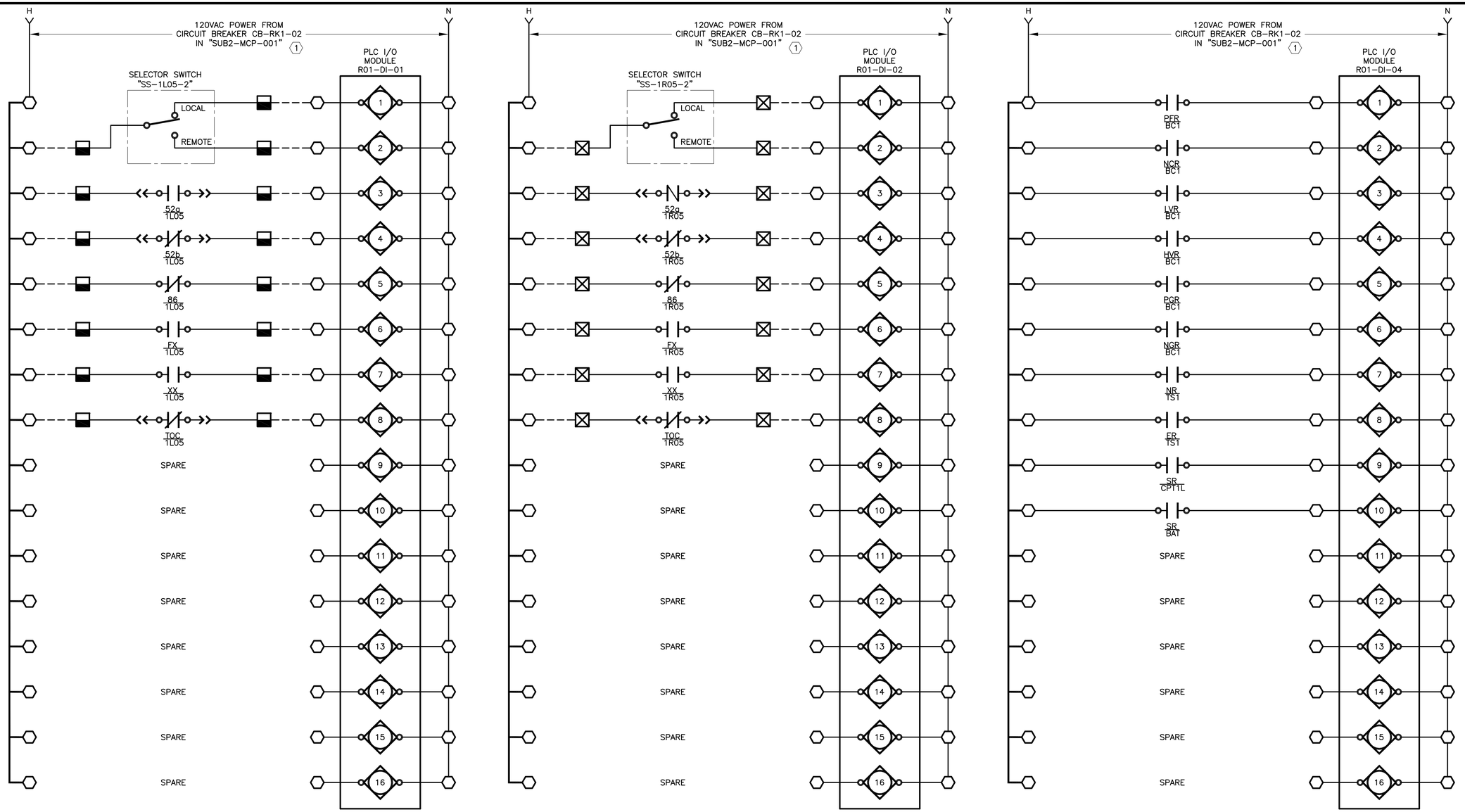

KEY NOTES:

1. RECORD DRAWING WERE INCOMPLETE, FIELD VERIFY PRIOR TO PERFORMING ANY DEMOLITION/RENOVATION ACTIVITIES.

BAR LENGTH ON ORIGINAL DRAWING EQUALS ONE INCH, ADJUST SCALE ACCORDINGLY.

REUSE OF DOCUMENTS

This document, and the designs incorporated herein, is an instrument of professional service that has been developed, designed and prepared by Harutunian Engineering, Inc., and is not to be used, in whole or in part, for any other project without giving written notice to Harutunian Engineering, Inc.

NO.	DATE:	DESCRIPTION

HARUTUNIAN ENGINEERING INCORPORATED
TEXAS FIRM REGISTRATION NUMBER F-2408
ENGINEERING AND ENVIRONMENTAL CONSULTANTS
8100 CROSS PARK DRIVE
AUSTIN, TEXAS 78754

STATE OF TEXAS
SHANT HARUTUNIAN
87735
REGISTERED
PROFESSIONAL ENGINEER
10/7/2019

DESIGNED BY:	HEI
CHECKED BY:	HEI
APPROVED BY:	HEI
SUBMITTAL DATE:	OCTOBER 2019
SCALE:	AS SHOWN

SOUTH AUSTIN REGIONAL WASTEWATER TREATMENT PLANT
ELECTRICAL SUBSTATION NO. 1 REPLACEMENT PROJECT
CIP I.D.# 3333.032

SUBSTATION NO. 2
MAIN CONTROL PANEL "SUB2-MCP-001"
PLC I/O POINTS - EXISTING

PROJECT NO: 2014-300 | SHT. 708 OF 866 | DWG NO. SUB2-E-025

130VDC POWER DISTRIBUTION PANEL
"SUB1-PDP-DC01"

+ −

MAIN CB
2P-800A
(SET@600A)

PDP-DC01/1,3	1-1/2" - 4#6(P), 1#8(G)	"VCB-1L04" CONTROL POWER (400VA)	CKT-1	CKT-2	"VCB-1R04" CONTROL POWER (400VA)	1-1/2" - 4#6(P), 1#8(G)	PDP-DC01/2,4
	INCLUDED IN CONDUIT WITH CIRCUIT NO. 1	"VCB-1L05" CONTROL POWER (413VA)	CKT-3	CKT-4	"VCB-1R05" CONTROL POWER (413VA)	INCLUDED IN CONDUIT WITH CIRCUIT NO. 2	
PDP-DC01/5,7	1-1/2" - 4#6(P), 1#8(G)	"VCB-1L06" CONTROL POWER (413VA)	CKT-5	CKT-6	"VCB-1R06" CONTROL POWER (413VA)	1-1/2" - 4#6(P), 1#8(G)	PDP-DC01/6,8
	INCLUDED IN CONDUIT WITH CIRCUIT NO. 5	"VCB-1L07" CONTROL POWER (400VA)	CKT-7	CKT-8	"VCB-1R07" CONTROL POWER (400VA)	INCLUDED IN CONDUIT WITH CIRCUIT NO. 6	
PDP-DC01/9,11,13	1-1/2" - 6#6(P), 1#8(G)	"VCB-1L08" CONTROL POWER (400VA)	CKT-9	CKT-10	"VCB-1R08" CONTROL POWER (400VA)	1-1/2" - 6#6(P), 1#8(G)	PDP-DC01/10,12,14
	INCLUDED IN CONDUIT WITH CIRCUIT NO. 9	"VCB-1L09" CONTROL POWER (400VA)	CKT-11	CKT-12	"VCB-1R09" CONTROL POWER (400VA)	INCLUDED IN CONDUIT WITH CIRCUIT NO. 10	
	INCLUDED IN CONDUIT WITH CIRCUIT NO. 9	"VCB-1L10" CONTROL POWER (400VA)	CKT-13	CKT-14	"VCB-1R10" CONTROL POWER (400VA)	INCLUDED IN CONDUIT WITH CIRCUIT NO. 10	
PDP-DC01/15,17,19	1-1/2" - 6#6(P), 1#8(G)	"VCB-1L11" CONTROL POWER (400VA)	CKT-15	CKT-16	"VCB-1R11" CONTROL POWER (400VA)	1-1/2" - 6#6(P), 1#8(G)	PDP-DC01/16,18,20
	INCLUDED IN CONDUIT WITH CIRCUIT NO. 15	"VCB-1L12" CONTROL POWER (400VA)	CKT-17	CKT-18	"VCB-1R12" CONTROL POWER (400VA)	INCLUDED IN CONDUIT WITH CIRCUIT NO. 16	
	INCLUDED IN CONDUIT WITH CIRCUIT NO. 15	"VCB-1L13" CONTROL POWER (400VA)	CKT-19	CKT-20	"VCB-1R13" CONTROL POWER (400VA)	INCLUDED IN CONDUIT WITH CIRCUIT NO. 16	
PDP-DC01/21,23,25	1-1/2" - 6#6(P), 1#8(G)	"VCB-1L14" CONTROL POWER (400VA)	CKT-21	CKT-22	"VCB-1R14" CONTROL POWER (400VA)	1-1/2" - 6#6(P), 1#8(G)	PDP-DC01/22,24,26
	INCLUDED IN CONDUIT WITH CIRCUIT NO. 21	"VCB-1L15" CONTROL POWER (400VA)	CKT-23	CKT-24	"VCB-1R15" CONTROL POWER (400VA)	INCLUDED IN CONDUIT WITH CIRCUIT NO. 22	

All breakers 2P-20A

MATCHLINE "A-A" REFER TO DRAWING NO. [SUB2-E-027]

BAR LENGTH ON ORIGINAL DRAWING EQUALS ONE INCH, ADJUST SCALE ACCORDINGLY.

REUSE OF DOCUMENTS

This document, and the designs incorporated herein, is an instrument of professional service that has been developed, designed and prepared by Harutunian Engineering, Inc., and is not to be used, in whole or in part, for any other project without giving written notice to Harutunian Engineering, Inc.

NO.	DATE:	DESCRIPTION

HARUTUNIAN ENGINEERING INCORPORATED

TEXAS FIRM REGISTRATION NUMBER F-2408

ENGINEERING AND ENVIRONMENTAL CONSULTANTS
8100 CROSS PARK DRIVE
AUSTIN, TEXAS 78754

STATE OF TEXAS
SHANT HARUTUNIAN
87735
REGISTERED
PROFESSIONAL ENGINEER
10/7/2019

DESIGNED BY:	HEI
CHECKED BY:	HEI
APPROVED BY:	HEI
SUBMITTAL DATE:	OCTOBER 2019
SCALE:	AS SHOWN

SOUTH AUSTIN REGIONAL WASTEWATER TREATMENT PLANT
ELECTRICAL SUBSTATION NO. 1 REPLACEMENT PROJECT
CIP I.D.# 3333.032

SUBSTATION NO. 2 PANEL SCHEDULE EXISTING (SHEET 1 OF 3)

PROJECT NO: 2014-300 | SHT. 709 OF 866 | DWG NO. SUB2-E-026

MATCHLINE "A–A" REFER TO DRAWING NO. [SUB2–E–026]

	INCLUDED IN CONDUIT WITH CIRCUIT NO. 21	"VCB–1L16" CONTROL POWER (400VA)	CKT–25 / CKT–26	"VCB–1R16" CONTROL POWER (400VA)	INCLUDED IN CONDUIT WITH CIRCUIT NO. 22	
PDP–DC01/27	1–1/2" – 2#2(P), 1#8(G)	"SUB2–INV–001" INVERTER DC POWER (5000VA)	CKT–27 / CKT–28	BREAKER TEST AREA RECEPTACLE (5000VA)	1" – 2#6(P), 1#8(G)	PDP–DC01/28
PDP–DC01/29	1" – 2#6(P), 1#8(G)	"SUB2–BM–001" BATTERY MONITOR CONTROL POWER (180VA)	CKT–29 / CKT–30	"SUB2–CP–001" BREAKER TEST CONTROL PANEL (180VA)	1" – 2#6(P), 1#8(G)	PDP–DC01/30
		SPARE	CKT–31 / CKT–32	SPARE		
		SPARE	CKT–33 / CKT–34	SPARE		
		SPARE	CKT–35 / CKT–36	SPARE		

All breakers: 2P–20A

BAR LENGTH ON ORIGINAL DRAWING EQUALS ONE INCH, ADJUST SCALE ACCORDINGLY.

REUSE OF DOCUMENTS

This document, and the designs incorporated herein, is an instrument of professional service that has been developed, designed and prepared by Harutunian Engineering, Inc., and is not to be used, in whole or in part, for any other project without giving written notice to Harutunian Engineering, Inc.

NO.	DATE:	DESCRIPTION

HARUTUNIAN ENGINEERING INCORPORATED

TEXAS FIRM REGISTRATION NUMBER F–2408

ENGINEERING AND ENVIRONMENTAL CONSULTANTS
8100 CROSS PARK DRIVE
AUSTIN, TEXAS 78754

STATE OF TEXAS
SHANT HARUTUNIAN
87735
REGISTERED
PROFESSIONAL ENGINEER
10/7/2019

DESIGNED BY:	HEI
CHECKED BY:	HEI
APPROVED BY:	HEI
SUBMITTAL DATE:	OCTOBER 2019
SCALE:	AS SHOWN

SOUTH AUSTIN REGIONAL WASTEWATER TREATMENT PLANT
ELECTRICAL SUBSTATION NO. 1 REPLACEMENT PROJECT
CIP I.D.# 3333.032

SUBSTATION NO. 2 PANEL SCHEDULE EXISTING (SHEET 2 OF 3)

PROJECT NO: 2014–300 | SHT. 710 OF 866 | DWG NO. SUB2–E–027

PANELBOARD "SUB2-LP-001"
120/208V, 225A BUS, 3ø, 4W

A B C N

MAIN CB 3P-150A

	SPARE	CKT-1 1P-20A	CKT-2 1P-20A	FLUORESCENT LIGHTING (1500VA)	1" - 3#10(P), 1#10(G)	LP1-2,4
LP1-1,3,29	1" - 5#10(P), 1#10(G)	FLUORESCENT LIGHTING (1100VA)	CKT-3 1P-20A	CKT-4 1P-20A	FLUORESCENT LIGHTING (1600VA)	INCLUDED IN CONDUIT WITH CIRCUIT NO. 2		
	INCLUDED IN CONDUIT WITH CIRCUIT NO. 3	FLUORESCENT LIGHTING (1100VA)	CKT-5 1P-20A	CKT-6 1P-20A	LIGHTING CONTACTOR "SUB2-LC-001" (50VA)	1" - 2#10(P), 1#10(G)	LP1-6	
LP1-7,8,17	1" -6#10(P), 1#10(G)	CONTROL PANEL LIGHTING (700VA)	CKT-7 1P-20A	CKT-8 1P-20A	CONTROL PANEL RECEPTACLES (450VA)	INCLUDED IN CONDUIT WITH CIRCUIT NO. 7		
LP1-9,11	1" - 3#10(P), 1#10(G)	RECEPTACLES (720VA)	CKT-9 2P-20A	CKT-10 1P-20A	RECEPTACLES (900VA)	1" - 3#10(P), 1#10(G)	LP1-10,12	
	INCLUDED IN CONDUIT WITH CIRCUIT NO. 9	RECEPTACLES (720VA)	CKT-11 1P-20A	CKT-12 1P-20A	RECEPTACLES (1080VA)	INCLUDED IN CONDUIT WITH CIRCUIT NO. 10		
	SPARE	CKT-13 1P-20A	CKT-14 1P-20A	VOICE COMM. CABINET "SUB2-CP-VCOM1" (800VA)	INCLUDED IN CONDUIT WITH CIRCUIT NO. 15		
LP1-15	1" - 4#10(P), 1#10(G)	BATTERY CHARGER "SUB2-BC-001" COOLING FAN (55VA)	CKT-15 1P-20A	CKT-16 1P-20A	BATTERY CHARGER "SUB2-BC-002" COOLING FANS (55VA)	1" - 4#10(P), 1#10(G)	LP1-16,18	
LP1-17	INCLUDED IN CONDUIT WITH CIRCUIT NO. 7	CONTROL PANEL COOLING FANS (55VA)	CKT-17 1P-20A	CKT-18 1P-20A	DC DISTRIBUTION BUS "SUB2-TB-001" COOLING FANS (55VA)	INCLUDED IN CONDUIT WITH CIRCUIT NO. 16		
LP1-19,21	1" - 4#10(P), 1#10(G)	"SUB2-SWGR-1R" SPACE HEATERS SECTIONS 1R13-1R17 (1000VA)	CKT-19 1P-20A	CKT-20 1P-20A	"SUB2-SWGR-1L" SPACE HEATERS SECTIONS 1L13-1L17 (1000VA)	1" - 4#10(P), 1#10(G)	LP1-20,22	
	INCLUDED IN CONDUIT WITH CIRCUIT NO. 19	"SUB2-SWGR-1R" SPACE HEATERS SECTIONS 1R07-1R12 (1000VA)	CKT-21 1P-20A	CKT-22 1P-20A	"SUB2-SWGR-1L" SPACE HEATERS SECTIONS 1L07-1L12 (1000VA)	INCLUDED IN CONDUIT WITH CIRCUIT NO. 22		
	FUTURE	SPARE	CKT-23	CKT-24	OUTDOOR LIGHTING (2400VA)	1" - 2#10(P), 1#10(G)	LP1-24,26	
			CKT-25	CKT-26 2P-20A				
			CKT-27 3P-20A	CKT-28 1P-20A	"SUB2-SWGR-1L" SPACE HEATERS (0VA)	1L01-1L08	LP1-28	
	INCLUDED IN CONDUIT WITH CIRCUIT NO. 3	FLUORESCENT LIGHTING (1600VA)	CKT-29 2P-20A	CKT-30 1P-20A	BUS DUCT SPACE HEATER (1000VA)	1" - 2#10(P), 1#10(G)	LP1-30	
	FUTURE	SPARE	CKT-31 1P-20A	CKT-32 1P-20A	SPARE			
	FUTURE	SPARE	CKT-33 1P-20A	CKT-34 1P-20A	SPARE			
	FUTURE	SPARE	CKT-35 1P-20A	CKT-36 1P-20A	"SUB2-SWGR-1R" SPACE HEATER (0VA)	1R01-1R08	LP1-36	
	FUTURE	SPARE	CKT-37 1P-20A	CKT-38 1P-20A	SPARE			
	FUTURE	SPARE	CKT-39 1P-20A	CKT-40 1P-20A	SPARE			
	FUTURE	SPARE	CKT-41 1P-20A	CKT-42 1P-20A	SPARE			

BAR LENGTH ON ORIGINAL DRAWING EQUALS ONE INCH, ADJUST SCALE ACCORDINGLY.

REUSE OF DOCUMENTS

This document, and the designs incorporated herein, is an instrument of professional service that has been developed, designed and prepared by Harutunian Engineering, Inc., and is not to be used, in whole or in part, for any other project without giving written notice to Harutunian Engineering, Inc.

NO.	DATE:	DESCRIPTION

HARUTUNIAN ENGINEERING INCORPORATED

TEXAS FIRM REGISTRATION NUMBER F-2408

ENGINEERING AND ENVIRONMENTAL CONSULTANTS
8100 CROSS PARK DRIVE
AUSTIN, TEXAS 78754

STATE OF TEXAS
SHANT HARUTUNIAN
87735
REGISTERED
PROFESSIONAL ENGINEER
10/7/2019

DESIGNED BY:	HEI
CHECKED BY:	HEI
APPROVED BY:	HEI
SUBMITTAL DATE:	OCTOBER 2019
SCALE:	AS SHOWN

SOUTH AUSTIN REGIONAL WASTEWATER TREATMENT PLANT
ELECTRICAL SUBSTATION NO. 1 REPLACEMENT PROJECT
CIP I.D.# 3333.032

SUBSTATION NO. 2 PANEL SCHEDULE EXISTING (SHEET 3 OF 3)

PROJECT NO: 2014-300 | SHT. 711 OF 866 | DWG NO. SUB2-E-028

KEY NOTES:

(1) THE IDENTIFICATION MARK SHOWN NEAR THE EQUIPMENT IS INTENDED ONLY FOR CROSS REFERENCING THE ENTRIES MADE IN THE NAMEPLATE AND EQUIPMENT SCHEDULES. REFER TO SCHEDULE ON THIS DRAWING FOR ADDITIONAL INFORMATION.

(2) NUMBER IN CIRCLE CORRESPONDS TO NUMBERS ON CONTROL PANEL ELEVATIONS. REFER TO SCHEDULE ON THIS DRAWING FOR ADDITIONAL INFORMATION.

(1)(2) FIBER OPTIC PATCH PANEL RACK EQUIPMENT SCHEDULE

MARK	DESCRIPTION
(1)	RACK FRAME
(2)	CABLE WIREWAY
(3)	FIBER PATCH PANEL
(4)	NAMEPLATE

(1) FIBER OPTIC PATCH PANEL RACK "SUB2–FPP–001" NAMEPLATE SCHEDULE

ID MARK	LINE NO.	LEGEND PLATE INSCRIPTION	LETTER SIZE (MINIMUM)
N–C	FIRST	SUB2–FPPA–IFSB"/"SUB2–FPPA–PTC1"	3/8"
N–D	FIRST	SUB2–FPPB–IFSB"/"SUB2–FPPB–PTC1"	3/8"

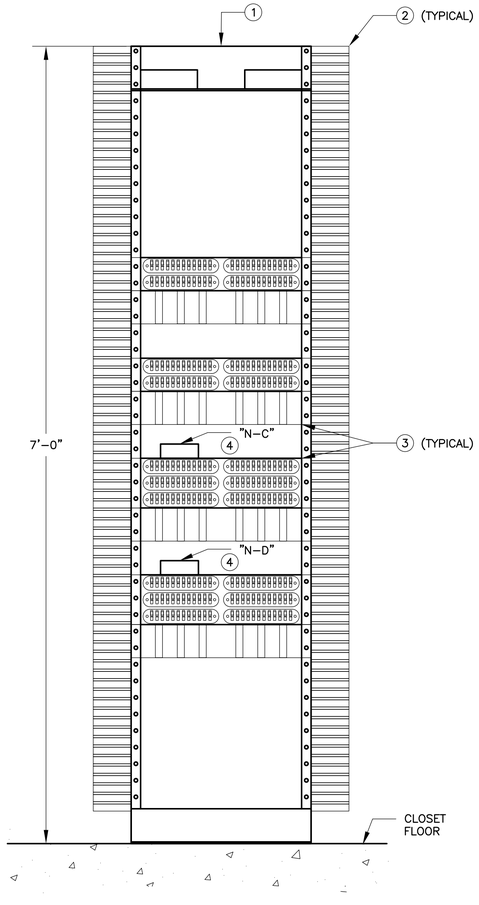

FIBER OPTIC PATCH PANEL RACK "SUB2–FPP–001"

SCALE: N.T.S.

BAR LENGTH ON ORIGINAL DRAWING EQUALS ONE INCH, ADJUST SCALE ACCORDINGLY.

REUSE OF DOCUMENTS

This document, and the designs incorporated herein, is an instrument of professional service that has been developed, designed and prepared by Harutunian Engineering, Inc., and is not to be used, in whole or in part, for any other project without giving written notice to Harutunian Engineering, Inc.

NO.	DATE:	DESCRIPTION

HARUTUNIAN ENGINEERING INCORPORATED

TEXAS FIRM REGISTRATION NUMBER F–2408

ENGINEERING AND ENVIRONMENTAL CONSULTANTS
8100 CROSS PARK DRIVE
AUSTIN, TEXAS 78754

STATE OF TEXAS
SHANT HARUTUNIAN
87735
REGISTERED
PROFESSIONAL ENGINEER
10/7/2019

DESIGNED BY:	HEI
CHECKED BY:	HEI
APPROVED BY:	HEI
SUBMITTAL DATE:	OCTOBER 2019
SCALE:	AS SHOWN

SOUTH AUSTIN REGIONAL WASTEWATER TREATMENT PLANT
ELECTRICAL SUBSTATION NO. 1 REPLACEMENT PROJECT
CIP I.D.# 3333.032

SUBSTATION NO. 2 COMMUNICATION EQUIPMENT ELEVATIONS – EXISTING

PROJECT NO: 2014–300 | SHT. 712 OF 866 | DWG NO. SUB2–E–029

12470V SWITCHGEAR "SUB2-SWGR-1L" (1)

15kV, 3ø, 3W, 2000A TIN PLATED COPPER BUS, RATED 1000MVA

"PT-SWGR1L-1" 120V 12470V

"PT-SWGR1L-2" 120V 12470V

LA "LA-SWGR1L"

S.C. "CAP-SWGR1L"

"CT-SWGR1L-3" 2000-1000/5 STB 3 DR

"CT-SWGR1L-2" 2000-1000/5 STB 3 DR

LUGS

"CT-SWGR1L-1" 50/5 STB 1

GROUND BUS

"CT-1L05-2" 2000/5 STB 3 X1-X5/MR

"VCB-1L05" 1200A 1000MVA 52

TRANSFORMER "CPT-XFMR-1L"
37.5kVA 3ø Δ 12470V Y 480/277V

3P-225A

CL VCB-1L05 [SUB2-E-042] (2)

PROTECTIVE RELAY "PR-1L05"

DISPLAY RELAY STATUS (RS)
METERING POWER FACTOR (PF)
METERING REACTIVE POWER (VAR)
METERING POWER (W)
METERING CURRENT (A)
METERING VOLTAGE (V)

- 50/51 INSTANT/TIMED PHASE OVERCURRENT
- 59 OVERVOLTS
- 81O/81U OVER/UNDER FREQUENCY
- 27 UNDERVOLTS
- 47 NEGATIVE SEQUENCE UNDERVOLTS
- 50N/51N INSTANT/TIMED NEUTRAL OVERCURRENT
- 67 DIRECTIONAL OVERCURRENT
- 55 POWER FACTOR
- 25 SYNC CHECK

TRIP 94 74
FAILURE
CONTROL PWR 130VDC
COM PORT
ETHERNET
GROUND

CONTROL POWER CIRCUITRY

"PT-SWGR1L-3" 120V 12470V

"CT-1L06-1" 2000/5 STB 3 X1-X5/MR

"VCB-1L06" 1200A 1000MVA 52

"CT-1L06-2" 2000/5 STB 3 X1-X5/MR

CL VCB-1L06 [SUB2-E-043] (2)

PROTECTIVE RELAY "PR-1L06-1"

CURRENT METERING (A)
RELAY STATUS DISPLAY (RS)

- 50/51 INSTANT/TIMED PHASE OVERCURRENT (1)
- 46O/46 INSTANT NEG. SEQUENCE OVERCURRENT (1)
- 51/46 TIMED NEG. SEQUENCE OVERCURRENT (1)
- 50N/51N INSTANT/TIMED NEUTRAL OVERCURRENT
- 87 DIFFERENTIAL OVERCURRENT
- 50/51 INSTANT/TIMED PHASE OVERCURRENT (2)
- 46O/46 INSTANT NEG. SEQUENCE OVERCURRENT (2)
- 51/46 TIMED NEG. SEQUENCE OVERCURRENT (2)
- 50G/51G INSTANT/TIMED GROUND OVERCURRENT

TRIP 74 94
FAILURE
130VDC CONTROL PWR
COM PORT
ETHERNET
GROUND

CONTROL POWER CIRCUITRY

PROTECTIVE RELAY "PR-1L06-2"

- VOLTAGE METERING (V)
- VOLTAGE DIFF. METERING (VΔ)
- PHASE DIFF. METERING (øΔ)
- FREQUENCY DIFF. METERING (FΔ)

SYNC OK 25 SYNC CHECK

74 94
SYNC
FAILURE
130VDC CONTROL PWR
GROUND

MATCHLINE "A-A" ON DRAWING NO. [SUB2-E-031].

"CT-SWGR1L-2" 2000-1000/5 STB 3 DR

F1-SUB2-1L01
F2-SUB2-1L01

12.47OV INCOMING FEEDER (BY AUSTIN ENERGY)

WHM

WATT-HOUR METER "SUB2-WHM-001"

AUTOMATIC TRANSFER SWITCH "SUB2-ATS-001" REFER TO DRAWING NO. [SUB2-E-040].

TO MAIN CONTROL PANEL "SUB2-DCP-01"

TO SWITCHGEAR "SUB2-SWGR-1R". REFER TO DRAWING NO. [SUB2-E-035].

TO DC POWER DISTRIBUTION PANEL "SUB2-PDP-DC01". REFER TO DRAWING NO. [SUB2-E-040].

TO MAIN CONTROL PANEL "SUB2-DCP-01"

FROM 12.47OV SWITCHGEAR "SUB2-SWGR-1R". REFER TO DRAWING NO. [SUB2-E-035].

TO MAIN CONTROL PANEL "SUB2-DCP-01"

OVERHEAD BUS DUCT

MATCHLINE "B-B" REFER TO DRAWING NO. [SUB2-E-035]

FROM 12.47OV SWITCHGEAR "SUB2-SWGR-1R". REFER TO DRAWING NO. [SUB2-E-035].

GENERAL NOTES:

1. ALL ELECTRICAL EQUIPMENT, WIRING, CONDUITS, ETC., SHOWN ON THIS DRAWING ARE EXISTING UNLESS NOTED OTHERWISE.

KEY NOTES:

(1) THE EXISTING METAL CLAD SWITCHGEAR IS MANUFACTURED BY "CUTLER HAMMER", G/O ITEM NO. "MUX00815-004", AND P/O NO. "5665-61004".

(2) REFER TO BREAKER CONTROL LOGIC FOR DEMOLITION DETAILS.

BAR LENGTH ON ORIGINAL DRAWING EQUALS ONE INCH, ADJUST SCALE ACCORDINGLY.

REUSE OF DOCUMENTS

This document, and the designs incorporated herein, is an instrument of professional service that has been developed, designed and prepared by Harutunian Engineering, Inc., and is not to be used, in whole or in part, for any other project without giving written notice to Harutunian Engineering, Inc.

NO.	DATE:	DESCRIPTION

HARUTUNIAN ENGINEERING INCORPORATED

TEXAS FIRM REGISTRATION NUMBER F-2408

ENGINEERING AND ENVIRONMENTAL CONSULTANTS
8100 CROSS PARK DRIVE
AUSTIN, TEXAS 78754

STATE OF TEXAS — SHANT HARUTUNIAN 87735 — REGISTERED PROFESSIONAL ENGINEER — 10/7/2019

DESIGNED BY:	HEI
CHECKED BY:	HEI
APPROVED BY:	HEI
SUBMITTAL DATE:	OCTOBER 2019
SCALE:	AS SHOWN

SOUTH AUSTIN REGIONAL WASTEWATER TREATMENT PLANT
ELECTRICAL SUBSTATION NO. 1 REPLACEMENT PROJECT
CIP I.D.# 3333.032

ELECTRICAL SUBSTATION NO. 2
DETAILED ONE-LINE DIAGRAM
DEMOLITION (SHEET 1 OF 11)

PROJECT NO: 2014-300 | SHT. 713 OF 866 | DWG NO. SUB2-E-030

12470V SWITCHGEAR "SUB2-SWGR-1L" (1)

15kV, 3ø, 3W, 2000A TIN PLATED COPPER BUS, RATED 1000MVA

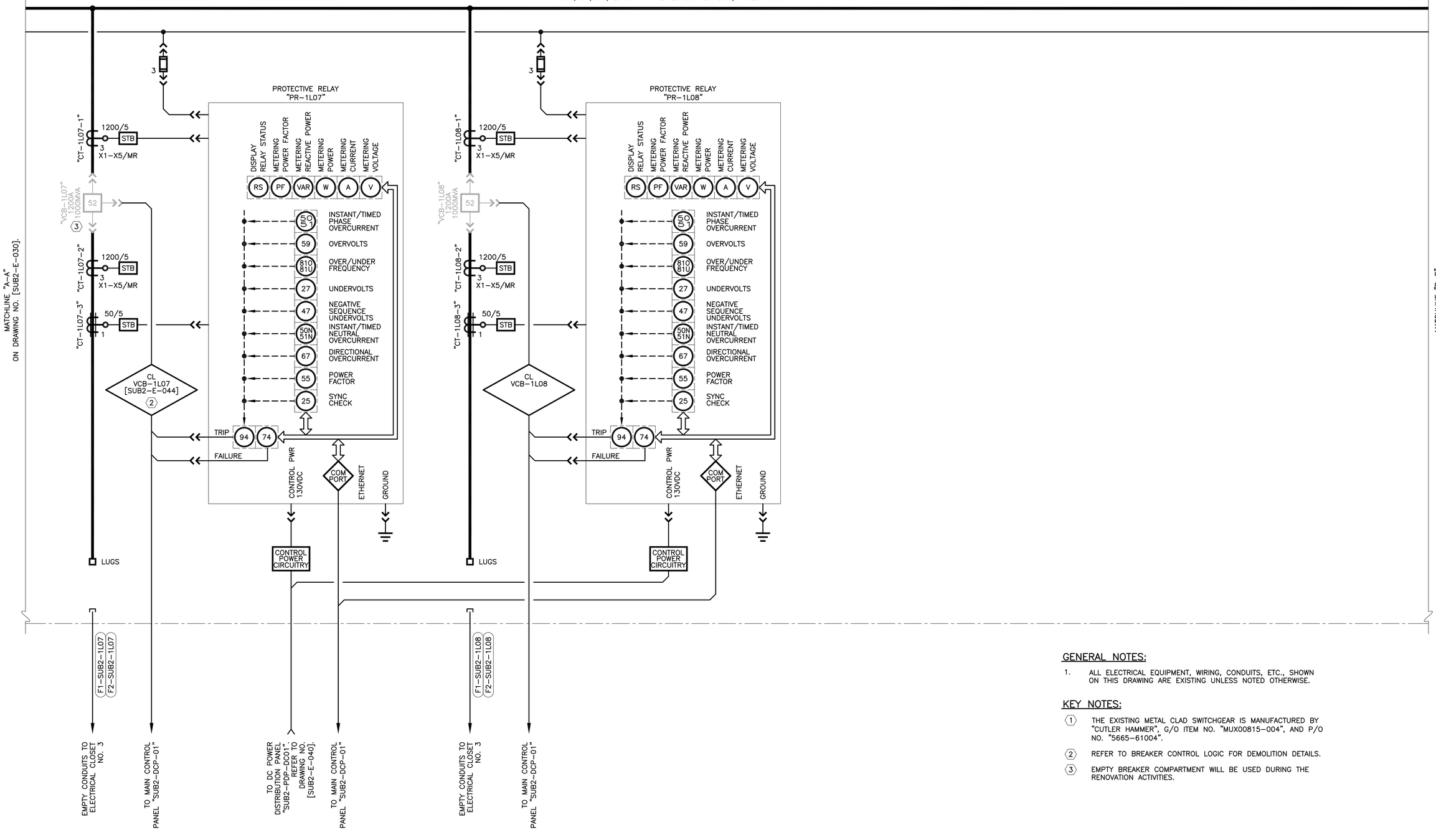

GENERAL NOTES:

1. ALL ELECTRICAL EQUIPMENT, WIRING, CONDUITS, ETC., SHOWN ON THIS DRAWING ARE EXISTING UNLESS NOTED OTHERWISE.

KEY NOTES:

(1) THE EXISTING METAL CLAD SWITCHGEAR IS MANUFACTURED BY "CUTLER HAMMER", G/O ITEM NO. "MUX00815-004", AND P/O NO. "5665-61004".

(2) REFER TO BREAKER CONTROL LOGIC FOR DEMOLITION DETAILS.

(3) EMPTY BREAKER COMPARTMENT WILL BE USED DURING THE RENOVATION ACTIVITIES.

BAR LENGTH ON ORIGINAL DRAWING EQUALS ONE INCH, ADJUST SCALE ACCORDINGLY.

REUSE OF DOCUMENTS

This document, and the designs incorporated herein, is an instrument of professional service that has been developed, designed and prepared by Harutunian Engineering, Inc., and is not to be used, in whole or in part, for any other project without giving written notice to Harutunian Engineering, Inc.

NO.	DATE:	DESCRIPTION

HARUTUNIAN ENGINEERING INCORPORATED

TEXAS FIRM REGISTRATION NUMBER F-2408

ENGINEERING AND ENVIRONMENTAL CONSULTANTS
8100 CROSS PARK DRIVE
AUSTIN, TEXAS 78754

STATE OF TEXAS
SHANT HARUTUNIAN
87735
REGISTERED
PROFESSIONAL ENGINEER
10/7/2019

DESIGNED BY:	HEI
CHECKED BY:	HEI
APPROVED BY:	HEI
SUBMITTAL DATE:	OCTOBER 2019
SCALE:	AS SHOWN

SOUTH AUSTIN REGIONAL WASTEWATER TREATMENT PLANT
ELECTRICAL SUBSTATION NO. 1 REPLACEMENT PROJECT
CIP I.D.# 3333.032

ELECTRICAL SUBSTATION NO. 2 DETAILED ONE-LINE DIAGRAM DEMOLITION (SHEET 2 OF 11)

PROJECT NO: 2014-300 | SHT. 714 OF 866 | DWG NO. SUB2-E-031

12470V SWITCHGEAR "SUB2-SWGR-1L" (1)

15kV, 3ø, 3W, 2000A TIN PLATED COPPER BUS, RATED 1000MVA

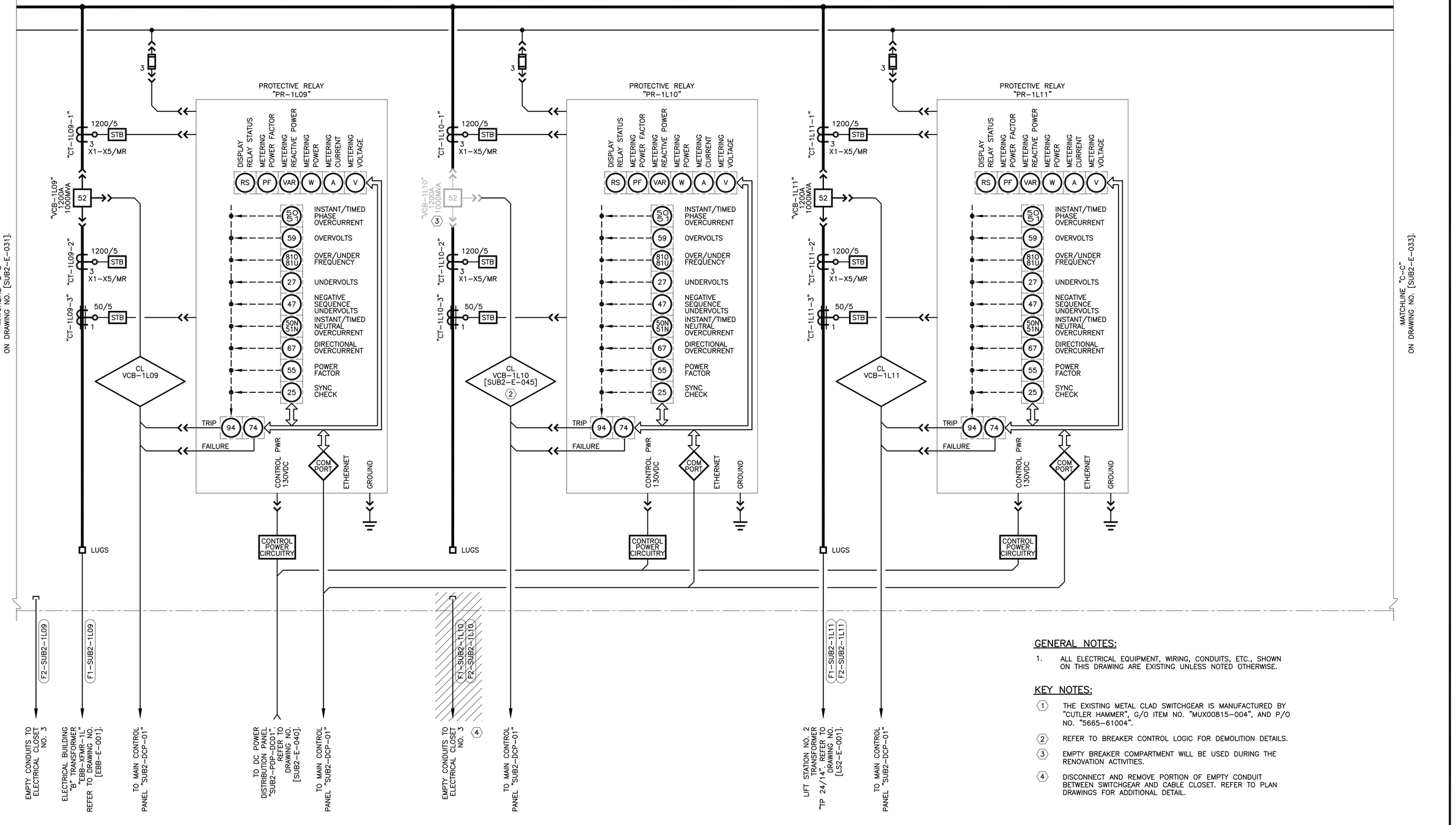

GENERAL NOTES:

1. ALL ELECTRICAL EQUIPMENT, WIRING, CONDUITS, ETC., SHOWN ON THIS DRAWING ARE EXISTING UNLESS NOTED OTHERWISE.

KEY NOTES:

(1) THE EXISTING METAL CLAD SWITCHGEAR IS MANUFACTURED BY "CUTLER HAMMER", G/O ITEM NO. "MUX00815-004", AND P/O NO. "5665-61004".

(2) REFER TO BREAKER CONTROL LOGIC FOR DEMOLITION DETAILS.

(3) EMPTY BREAKER COMPARTMENT WILL BE USED DURING THE RENOVATION ACTIVITIES.

(4) DISCONNECT AND REMOVE PORTION OF EMPTY CONDUIT BETWEEN SWITCHGEAR AND CABLE CLOSET. REFER TO PLAN DRAWINGS FOR ADDITIONAL DETAIL.

BAR LENGTH ON ORIGINAL DRAWING EQUALS ONE INCH, ADJUST SCALE ACCORDINGLY.

REUSE OF DOCUMENTS

This document, and the designs incorporated herein, is an instrument of professional service that has been developed, designed and prepared by Harutunian Engineering, Inc., and is not to be used, in whole or in part, for any other project without giving written notice to Harutunian Engineering, Inc.

NO.	DATE:	DESCRIPTION

HARUTUNIAN ENGINEERING INCORPORATED

TEXAS FIRM REGISTRATION NUMBER F-2408

ENGINEERING AND ENVIRONMENTAL CONSULTANTS
8100 CROSS PARK DRIVE
AUSTIN, TEXAS 78754

STATE OF TEXAS
SHANT HARUTUNIAN
87735
REGISTERED
PROFESSIONAL ENGINEER
10/7/2019

DESIGNED BY:	HEI
CHECKED BY:	HEI
APPROVED BY:	HEI
SUBMITTAL DATE:	OCTOBER 2019
SCALE:	AS SHOWN

SOUTH AUSTIN REGIONAL WASTEWATER TREATMENT PLANT
ELECTRICAL SUBSTATION NO. 1 REPLACEMENT PROJECT
CIP I.D.# 3333.032

ELECTRICAL SUBSTATION NO. 2 DETAILED ONE-LINE DIAGRAM DEMOLITION (SHEET 3 OF 11)

PROJECT NO: 2014-300 | SHT. 715 OF 866 | DWG NO. SUB2-E-032

12470V SWITCHGEAR "SUB2-SWGR-1L" (1)

15kV, 3ø, 3W, 2000A TIN PLATED COPPER BUS, RATED 1000MVA

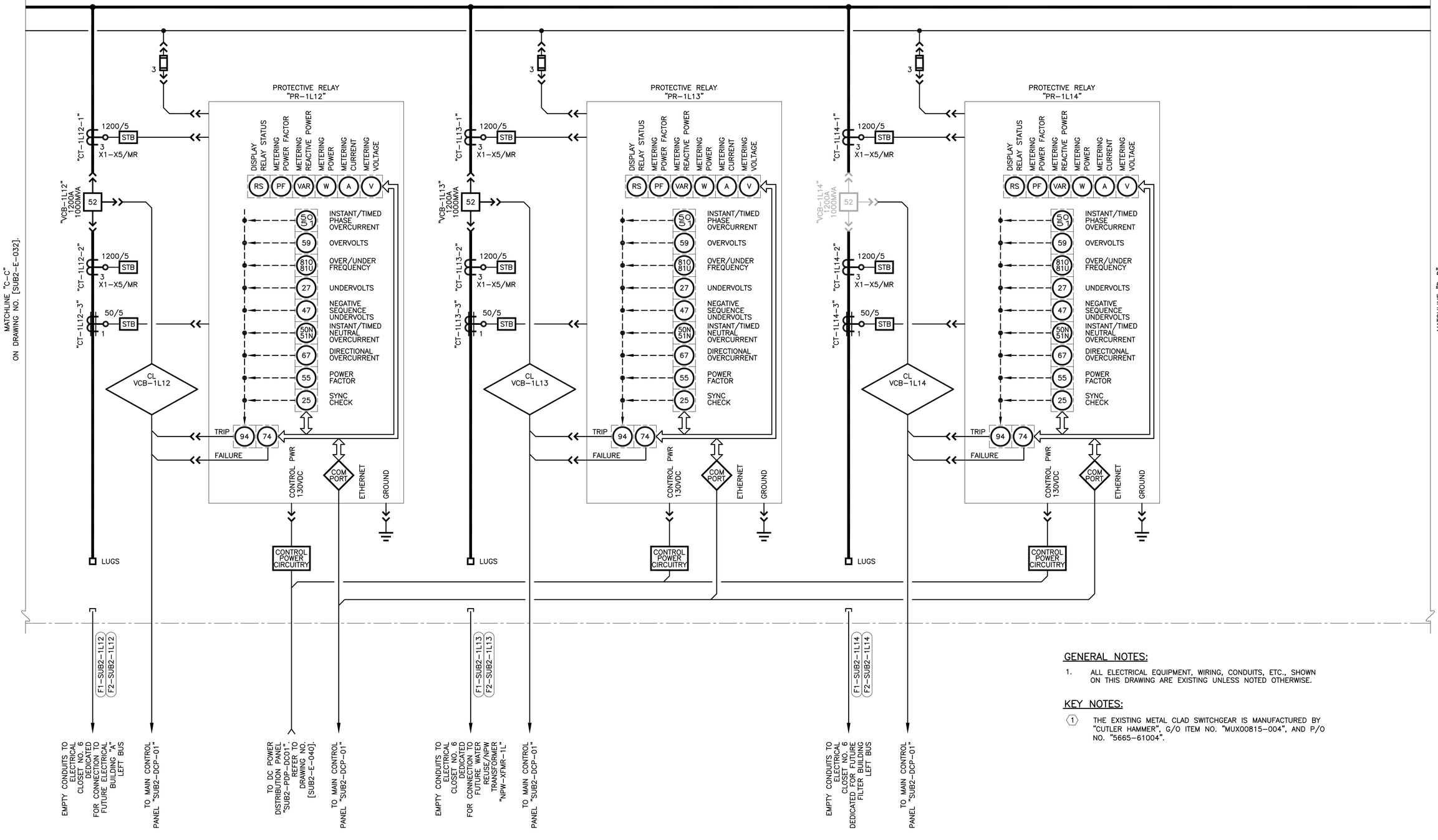

GENERAL NOTES:

1. ALL ELECTRICAL EQUIPMENT, WIRING, CONDUITS, ETC., SHOWN ON THIS DRAWING ARE EXISTING UNLESS NOTED OTHERWISE.

KEY NOTES:

(1) THE EXISTING METAL CLAD SWITCHGEAR IS MANUFACTURED BY "CUTLER HAMMER", G/O ITEM NO. "MUX00815-004", AND P/O NO. "5665-61004".

BAR LENGTH ON ORIGINAL DRAWING EQUALS ONE INCH, ADJUST SCALE ACCORDINGLY.

REUSE OF DOCUMENTS

This document, and the designs incorporated herein, is an instrument of professional service that has been developed, designed and prepared by Harutunian Engineering, Inc., and is not to be used, in whole or in part, for any other project without giving written notice to Harutunian Engineering, Inc.

NO.	DATE:	DESCRIPTION

HARUTUNIAN ENGINEERING INCORPORATED

TEXAS FIRM REGISTRATION NUMBER F-2408

ENGINEERING AND ENVIRONMENTAL CONSULTANTS
8100 CROSS PARK DRIVE
AUSTIN, TEXAS 78754

STATE OF TEXAS
SHANT HARUTUNIAN
87735
REGISTERED
PROFESSIONAL ENGINEER
10/7/2019

DESIGNED BY:	HEI
CHECKED BY:	HEI
APPROVED BY:	HEI
SUBMITTAL DATE:	OCTOBER 2019
SCALE:	AS SHOWN

SOUTH AUSTIN REGIONAL WASTEWATER TREATMENT PLANT
ELECTRICAL SUBSTATION NO. 1 REPLACEMENT PROJECT
CIP I.D.# 3333.032

ELECTRICAL SUBSTATION NO. 2 DETAILED ONE-LINE DIAGRAM DEMOLITION (SHEET 4 OF 11)

PROJECT NO: 2014-300 | SHT. 716 OF 866 | DWG NO. SUB2-E-033

12470V SWITCHGEAR "SUB2-SWGR-1L" (1)

15kV, 3ø, 3W, 2000A TIN PLATED COPPER BUS, RATED 1000MVA

MATCHLINE "D-D" ON DRAWING NO. [SUB2-E-033].

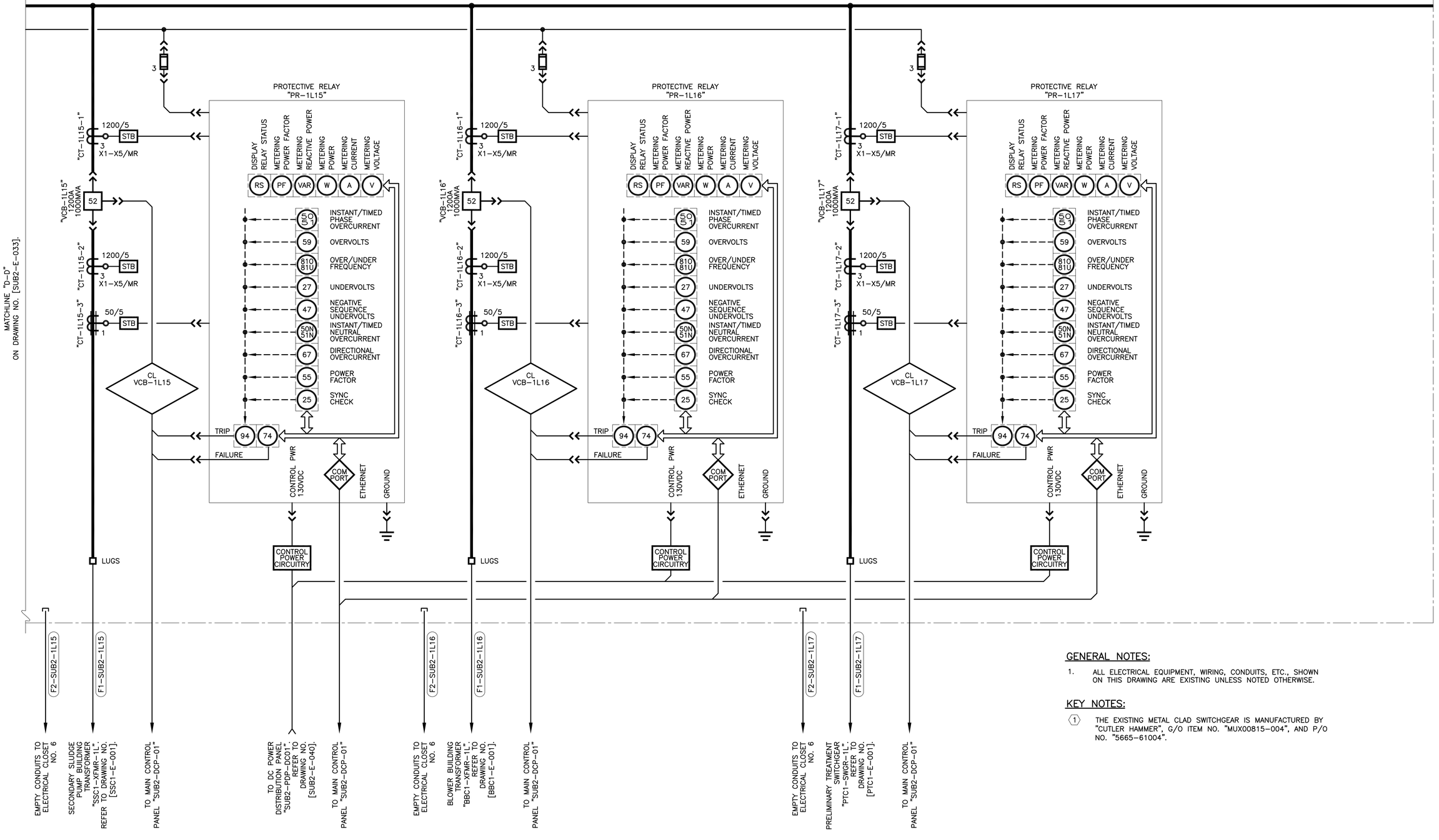

GENERAL NOTES:

1. ALL ELECTRICAL EQUIPMENT, WIRING, CONDUITS, ETC., SHOWN ON THIS DRAWING ARE EXISTING UNLESS NOTED OTHERWISE.

KEY NOTES:

(1) THE EXISTING METAL CLAD SWITCHGEAR IS MANUFACTURED BY "CUTLER HAMMER", G/O ITEM NO. "MUX00815-004", AND P/O NO. "5665-61004".

BAR LENGTH ON ORIGINAL DRAWING EQUALS ONE INCH, ADJUST SCALE ACCORDINGLY.

REUSE OF DOCUMENTS

This document, and the designs incorporated herein, is an instrument of professional service that has been developed, designed and prepared by Harutunian Engineering, Inc., and is not to be used, in whole or in part, for any other project without giving written notice to Harutunian Engineering, Inc.

NO.	DATE:	DESCRIPTION

HARUTUNIAN ENGINEERING INCORPORATED

TEXAS FIRM REGISTRATION NUMBER F-2408

ENGINEERING AND ENVIRONMENTAL CONSULTANTS
8100 CROSS PARK DRIVE
AUSTIN, TEXAS 78754

STATE OF TEXAS
SHANT HARUTUNIAN
87735
REGISTERED
PROFESSIONAL ENGINEER
10/7/2019

DESIGNED BY:	HEI
CHECKED BY:	HEI
APPROVED BY:	HEI
SUBMITTAL DATE:	OCTOBER 2019
SCALE:	AS SHOWN

SOUTH AUSTIN REGIONAL WASTEWATER TREATMENT PLANT
ELECTRICAL SUBSTATION NO. 1 REPLACEMENT PROJECT
CIP I.D.# 3333.032

ELECTRICAL SUBSTATION NO. 2 DETAILED ONE-LINE DIAGRAM DEMOLITION (SHEET 5 OF 11)

PROJECT NO: 2014-300 | SHT. 717 OF 866 | DWG NO. SUB2-E-034

12470V SWITCHGEAR "SUB2-SWGR-1R" (1)

15kV, 3ø, 3W, 2000A TIN PLATED COPPER BUS, RATED 1000MVA

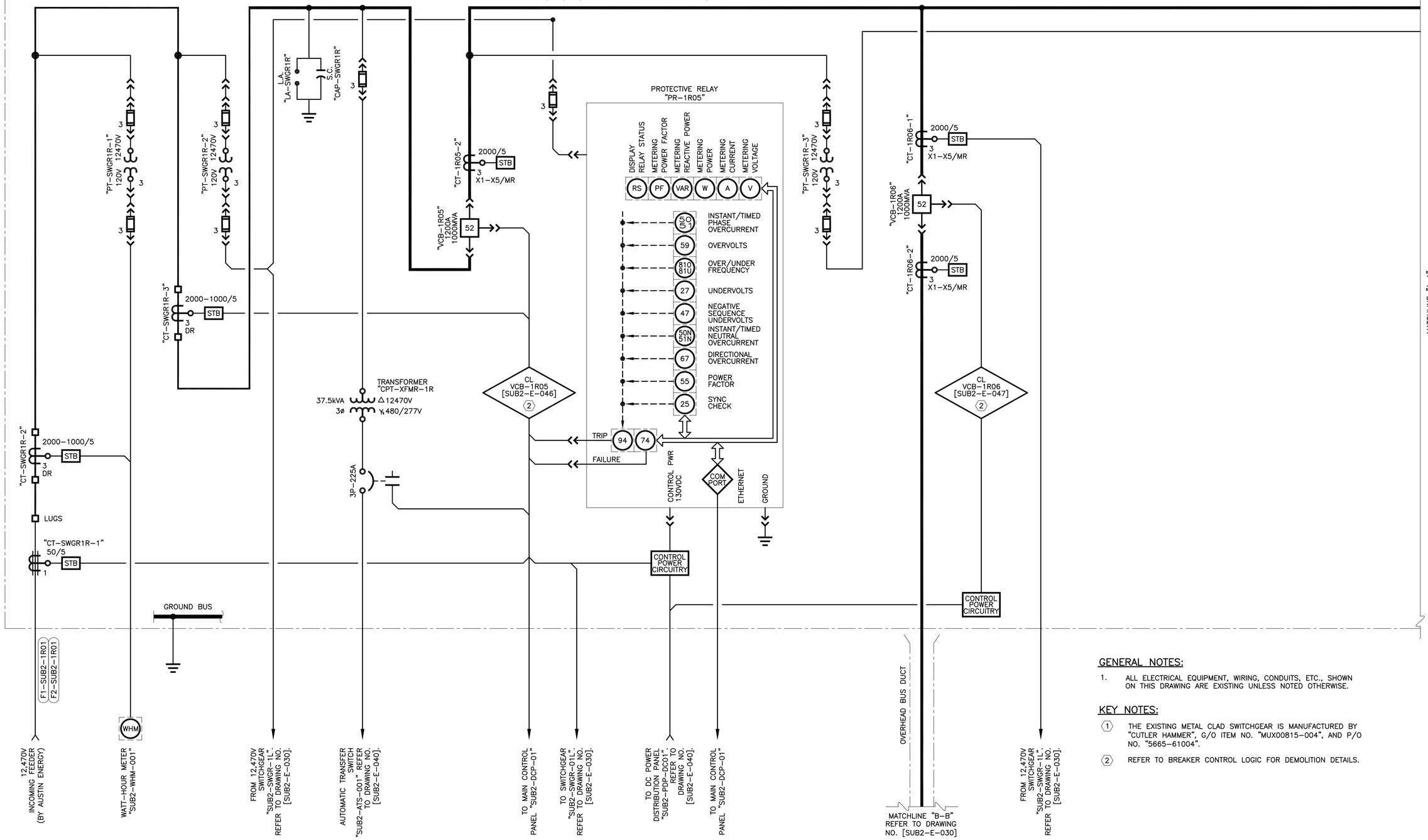

GENERAL NOTES:

1. ALL ELECTRICAL EQUIPMENT, WIRING, CONDUITS, ETC., SHOWN ON THIS DRAWING ARE EXISTING UNLESS NOTED OTHERWISE.

KEY NOTES:

(1) THE EXISTING METAL CLAD SWITCHGEAR IS MANUFACTURED BY "CUTLER HAMMER", G/O ITEM NO. "MUX00815-004", AND P/O NO. "5665-61004".

(2) REFER TO BREAKER CONTROL LOGIC FOR DEMOLITION DETAILS.

BAR LENGTH ON ORIGINAL DRAWING EQUALS ONE INCH, ADJUST SCALE ACCORDINGLY.

REUSE OF DOCUMENTS

This document, and the designs incorporated herein, is an instrument of professional service that has been developed, designed and prepared by Harutunian Engineering, Inc., and is not to be used, in whole or in part, for any other project without giving written notice to Harutunian Engineering, Inc.

NO.	DATE:	DESCRIPTION

HARUTUNIAN ENGINEERING INCORPORATED

TEXAS FIRM REGISTRATION NUMBER F-2408

ENGINEERING AND ENVIRONMENTAL CONSULTANTS
8100 CROSS PARK DRIVE
AUSTIN, TEXAS 78754

STATE OF TEXAS · SHANT HARUTUNIAN 87735 · REGISTERED PROFESSIONAL ENGINEER · 10/7/2019

DESIGNED BY:	HEI
CHECKED BY:	HEI
APPROVED BY:	HEI
SUBMITTAL DATE:	OCTOBER 2019
SCALE:	AS SHOWN

SOUTH AUSTIN REGIONAL WASTEWATER TREATMENT PLANT
ELECTRICAL SUBSTATION NO. 1 REPLACEMENT PROJECT
CIP I.D.# 3333.032

ELECTRICAL SUBSTATION NO. 2 DETAILED ONE-LINE DIAGRAM DEMOLITION (SHEET 6 OF 11)

PROJECT NO: 2014-300 | SHT. 718 OF 866 | DWG NO. SUB2-E-035

12470V SWITCHGEAR "SUB2-SWGR-1R" (1)

15kV, 3ø, 3W, 2000A TIN PLATED COPPER BUS, RATED 1000MVA

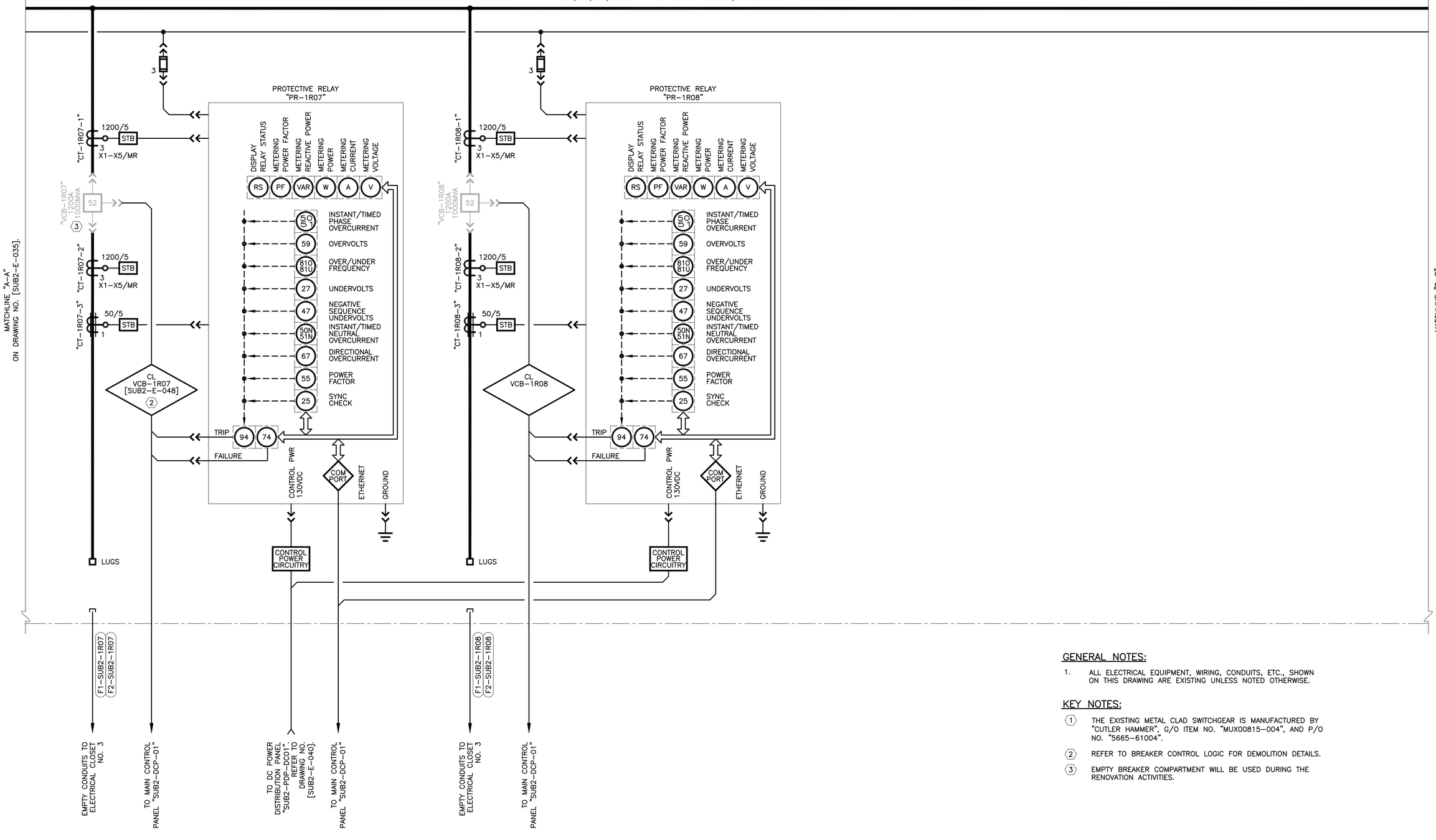

GENERAL NOTES:

1. ALL ELECTRICAL EQUIPMENT, WIRING, CONDUITS, ETC., SHOWN ON THIS DRAWING ARE EXISTING UNLESS NOTED OTHERWISE.

KEY NOTES:

(1) THE EXISTING METAL CLAD SWITCHGEAR IS MANUFACTURED BY "CUTLER HAMMER", G/O ITEM NO. "MUX00815-004", AND P/O NO. "5665-61004".

(2) REFER TO BREAKER CONTROL LOGIC FOR DEMOLITION DETAILS.

(3) EMPTY BREAKER COMPARTMENT WILL BE USED DURING THE RENOVATION ACTIVITIES.

BAR LENGTH ON ORIGINAL DRAWING EQUALS ONE INCH, ADJUST SCALE ACCORDINGLY.

REUSE OF DOCUMENTS

This document, and the designs incorporated herein, is an instrument of professional service that has been developed, designed and prepared by Harutunian Engineering, Inc., and is not to be used, in whole or in part, for any other project without giving written notice to Harutunian Engineering, Inc.

NO.	DATE:	DESCRIPTION

HARUTUNIAN ENGINEERING INCORPORATED

TEXAS FIRM REGISTRATION NUMBER F-2408

ENGINEERING AND ENVIRONMENTAL CONSULTANTS
8100 CROSS PARK DRIVE
AUSTIN, TEXAS 78754

STATE OF TEXAS
SHANT HARUTUNIAN
87735
REGISTERED
PROFESSIONAL ENGINEER
10/7/2019

DESIGNED BY:	HEI
CHECKED BY:	HEI
APPROVED BY:	HEI
SUBMITTAL DATE:	OCTOBER 2019
SCALE:	AS SHOWN

SOUTH AUSTIN REGIONAL WASTEWATER TREATMENT PLANT
ELECTRICAL SUBSTATION NO. 1 REPLACEMENT PROJECT
CIP I.D.# 3333.032

ELECTRICAL SUBSTATION NO. 2 DETAILED ONE-LINE DIAGRAM DEMOLITION (SHEET 7 OF 11)

PROJECT NO: 2014-300 | SHT. 719 OF 866 | DWG NO. SUB2-E-036

12470V SWITCHGEAR "SUB2-SWGR-1R" (1)

15kV, 3ø, 3W, 2000A TIN PLATED COPPER BUS, RATED 1000MVA

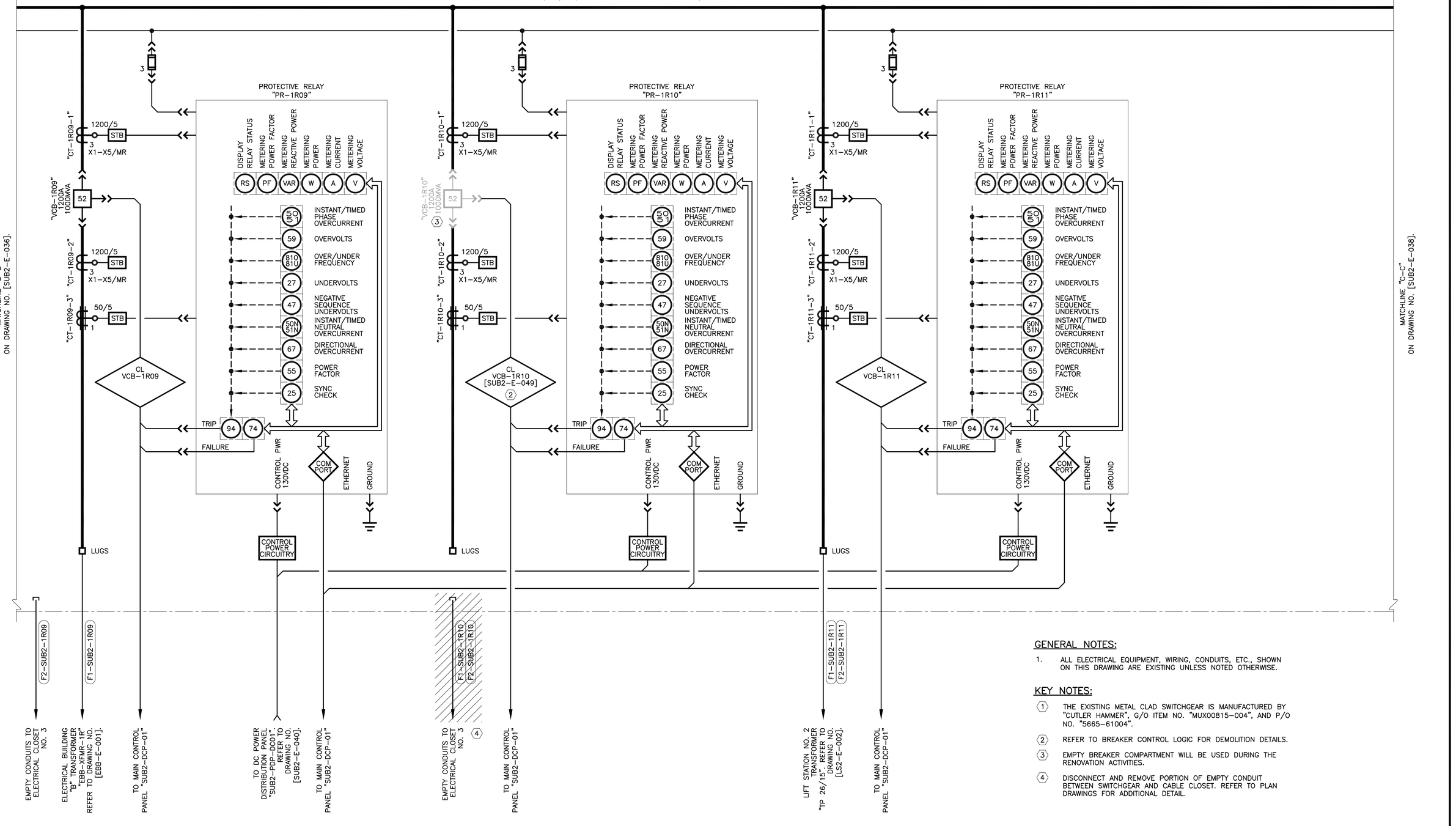

GENERAL NOTES:

1. ALL ELECTRICAL EQUIPMENT, WIRING, CONDUITS, ETC., SHOWN ON THIS DRAWING ARE EXISTING UNLESS NOTED OTHERWISE.

KEY NOTES:

(1) THE EXISTING METAL CLAD SWITCHGEAR IS MANUFACTURED BY "CUTLER HAMMER", G/O ITEM NO. "MUX00815-004", AND P/O NO. "5665-61004".

(2) REFER TO BREAKER CONTROL LOGIC FOR DEMOLITION DETAILS.

(3) EMPTY BREAKER COMPARTMENT WILL BE USED DURING THE RENOVATION ACTIVITIES.

(4) DISCONNECT AND REMOVE PORTION OF EMPTY CONDUIT BETWEEN SWITCHGEAR AND CABLE CLOSET. REFER TO PLAN DRAWINGS FOR ADDITIONAL DETAIL.

BAR LENGTH ON ORIGINAL DRAWING EQUALS ONE INCH, ADJUST SCALE ACCORDINGLY.

REUSE OF DOCUMENTS

This document, and the designs incorporated herein, is an instrument of professional service that has been developed, designed and prepared by Harutunian Engineering, Inc., and is not to be used, in whole or in part, for any other project without giving written notice to Harutunian Engineering, Inc.

NO.	DATE:	DESCRIPTION

HARUTUNIAN ENGINEERING INCORPORATED

TEXAS FIRM REGISTRATION NUMBER F-2408

ENGINEERING AND ENVIRONMENTAL CONSULTANTS
8100 CROSS PARK DRIVE
AUSTIN, TEXAS 78754

STATE OF TEXAS
SHANT HARUTUNIAN
87735
REGISTERED
PROFESSIONAL ENGINEER
10/7/2019

DESIGNED BY:	HEI
CHECKED BY:	HEI
APPROVED BY:	HEI
SUBMITTAL DATE:	OCTOBER 2019
SCALE:	AS SHOWN

SOUTH AUSTIN REGIONAL WASTEWATER TREATMENT PLANT
ELECTRICAL SUBSTATION NO. 1 REPLACEMENT PROJECT
CIP I.D.# 3333.032

ELECTRICAL SUBSTATION NO. 2 DETAILED ONE-LINE DIAGRAM DEMOLITION (SHEET 8 OF 11)

PROJECT NO: 2014-300 | SHT. 720 OF 866 | DWG NO. SUB2-E-037

12470V SWITCHGEAR "SUB2-SWGR-1R" (1)

15kV, 3ø, 3W, 2000A TIN PLATED COPPER BUS, RATED 1000MVA

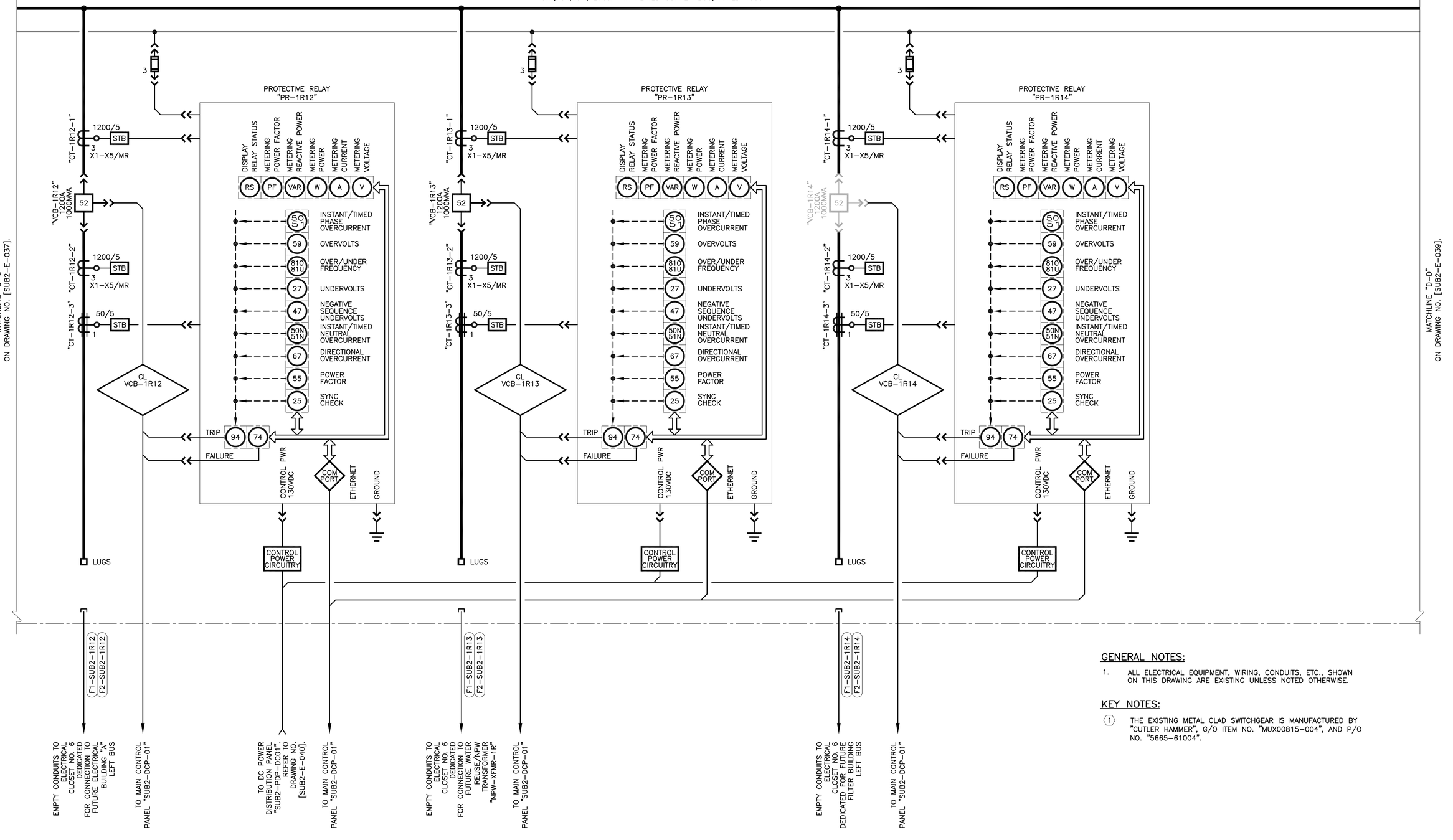

GENERAL NOTES:

1. ALL ELECTRICAL EQUIPMENT, WIRING, CONDUITS, ETC., SHOWN ON THIS DRAWING ARE EXISTING UNLESS NOTED OTHERWISE.

KEY NOTES:

(1) THE EXISTING METAL CLAD SWITCHGEAR IS MANUFACTURED BY "CUTLER HAMMER", G/O ITEM NO. "MUX00815-004", AND P/O NO. "5665-61004".

BAR LENGTH ON ORIGINAL DRAWING EQUALS ONE INCH, ADJUST SCALE ACCORDINGLY.

REUSE OF DOCUMENTS

This document, and the designs incorporated herein, is an instrument of professional service that has been developed, designed and prepared by Harutunian Engineering, Inc., and is not to be used, in whole or in part, for any other project without giving written notice to Harutunian Engineering, Inc.

NO.	DATE:	DESCRIPTION

HARUTUNIAN ENGINEERING INCORPORATED

TEXAS FIRM REGISTRATION NUMBER F-2408

ENGINEERING AND ENVIRONMENTAL CONSULTANTS
8100 CROSS PARK DRIVE
AUSTIN, TEXAS 78754

STATE OF TEXAS
SHANT HARUTUNIAN
87735
REGISTERED
PROFESSIONAL ENGINEER
10/7/2019

DESIGNED BY:	HEI
CHECKED BY:	HEI
APPROVED BY:	HEI
SUBMITTAL DATE:	OCTOBER 2019
SCALE:	AS SHOWN

SOUTH AUSTIN REGIONAL WASTEWATER TREATMENT PLANT
ELECTRICAL SUBSTATION NO. 1 REPLACEMENT PROJECT
CIP I.D.# 3333.032

ELECTRICAL SUBSTATION NO. 2 DETAILED ONE-LINE DIAGRAM DEMOLITION (SHEET 9 OF 11)

PROJECT NO: 2014-300 | SHT. 721 OF 866 | DWG NO. SUB2-E-038

12470V SWITCHGEAR "SUB2-SWGR-1R" (1)

15kV, 3ø, 3W, 2000A TIN PLATED COPPER BUS, RATED 1000MVA

MATCHLINE "D-D" ON DRAWING NO. [SUB2-E-038].

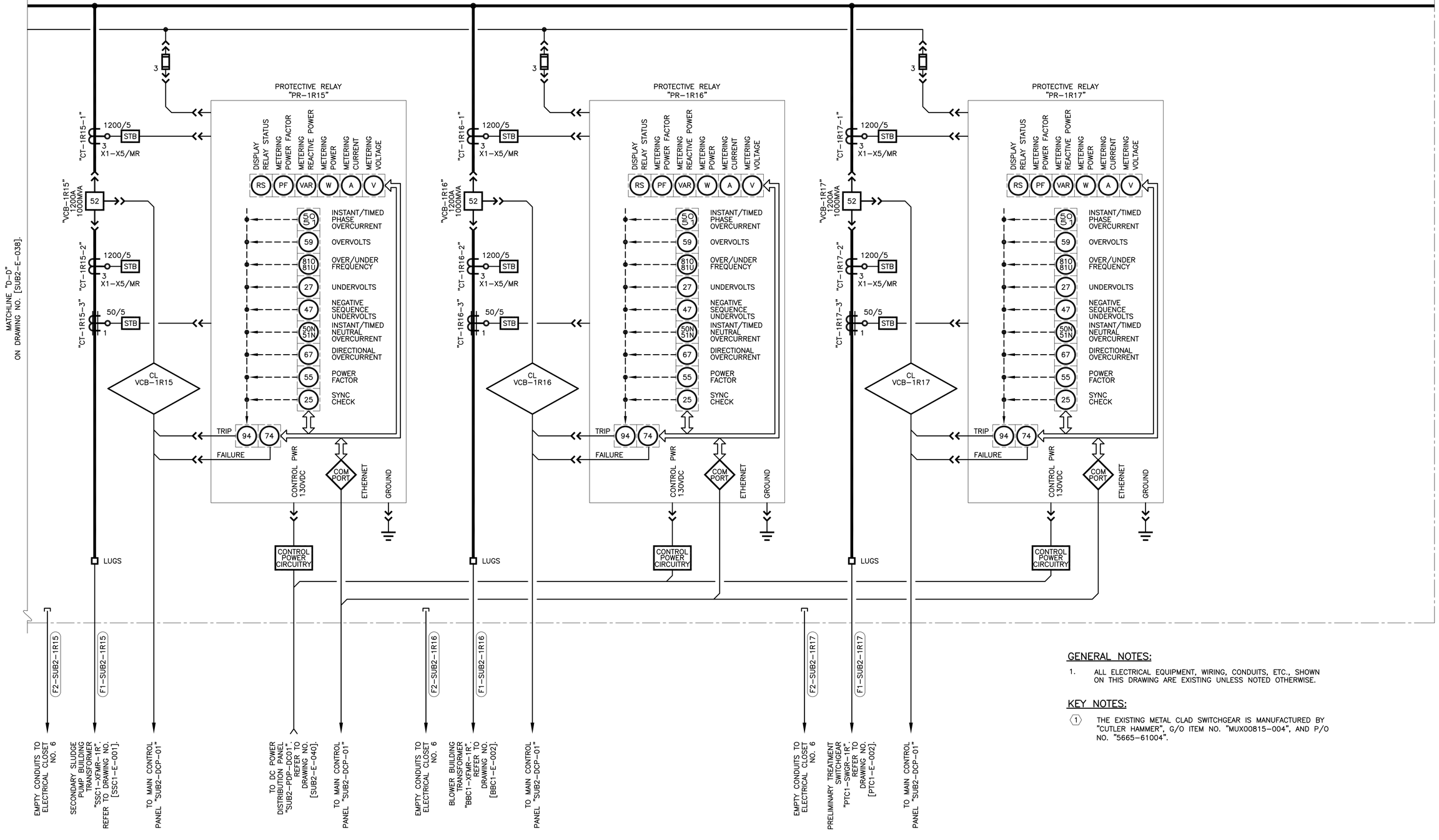

GENERAL NOTES:

1. ALL ELECTRICAL EQUIPMENT, WIRING, CONDUITS, ETC., SHOWN ON THIS DRAWING ARE EXISTING UNLESS NOTED OTHERWISE.

KEY NOTES:

(1) THE EXISTING METAL CLAD SWITCHGEAR IS MANUFACTURED BY "CUTLER HAMMER", G/O ITEM NO. "MUX00815-004", AND P/O NO. "5665-61004".

BAR LENGTH ON ORIGINAL DRAWING EQUALS ONE INCH, ADJUST SCALE ACCORDINGLY.

REUSE OF DOCUMENTS

This document, and the designs incorporated herein, is an instrument of professional service that has been developed, designed and prepared by Harutunian Engineering, Inc., and is not to be used, in whole or in part, for any other project without giving written notice to Harutunian Engineering, Inc.

NO.	DATE:	DESCRIPTION

HARUTUNIAN ENGINEERING INCORPORATED

TEXAS FIRM REGISTRATION NUMBER F-2408

ENGINEERING AND ENVIRONMENTAL CONSULTANTS
8100 CROSS PARK DRIVE
AUSTIN, TEXAS 78754

STATE OF TEXAS
SHANT HARUTUNIAN
87735
REGISTERED
PROFESSIONAL ENGINEER
10/7/2019

DESIGNED BY:	HEI
CHECKED BY:	HEI
APPROVED BY:	HEI
SUBMITTAL DATE:	OCTOBER 2019
SCALE:	AS SHOWN

SOUTH AUSTIN REGIONAL WASTEWATER TREATMENT PLANT
ELECTRICAL SUBSTATION NO. 1 REPLACEMENT PROJECT
CIP I.D.# 3333.032

ELECTRICAL SUBSTATION NO. 2 DETAILED ONE-LINE DIAGRAM DEMOLITION (SHEET 10 OF 11)

PROJECT NO: 2014-300 | SHT. 722 OF 866 | DWG NO. SUB2-E-039

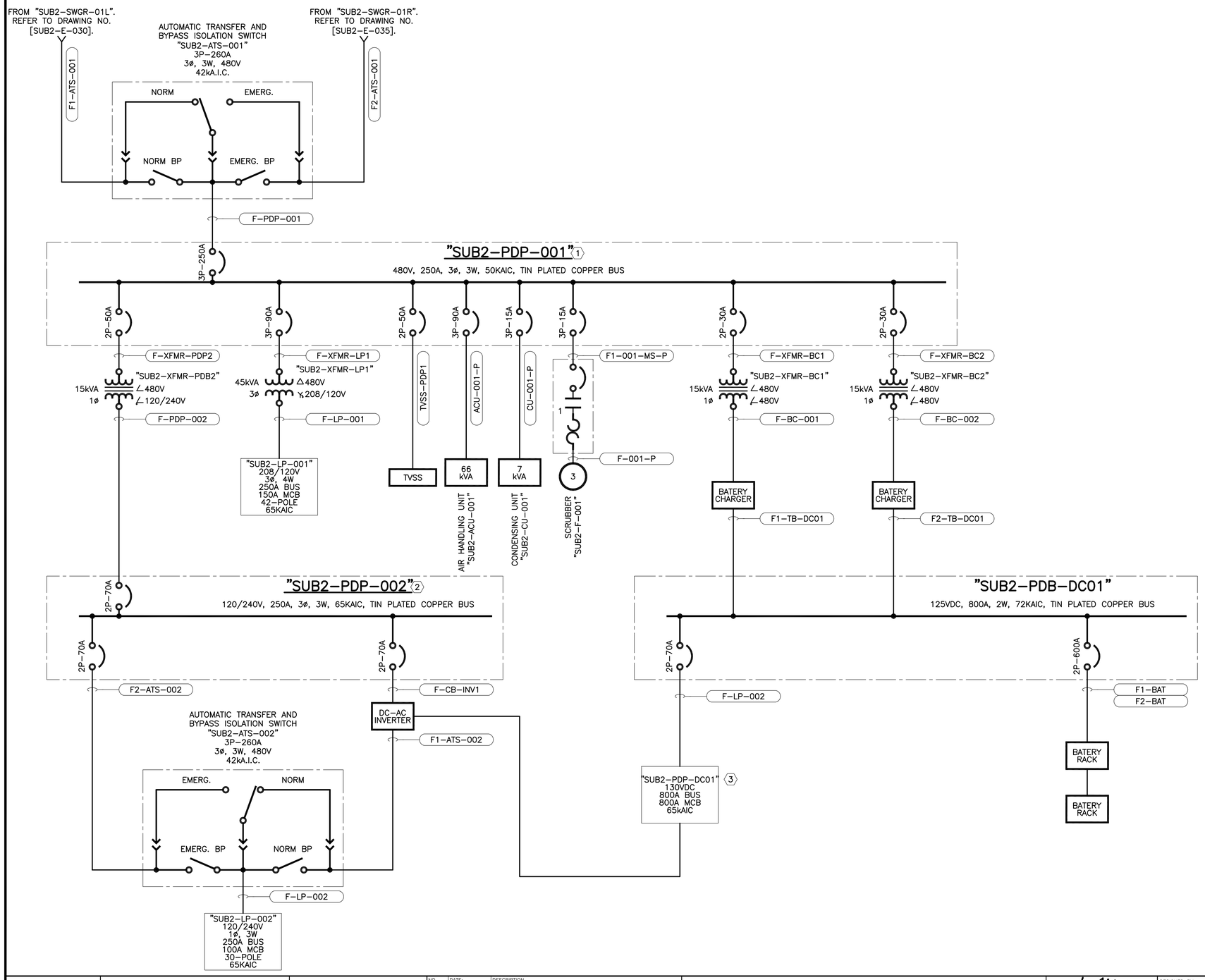

GENERAL NOTES:

1. ALL ELECTRICAL EQUIPMENT, WIRING, CONDUITS, ETC., SHOWN ON THIS DRAWING ARE EXISTING UNLESS NOTED OTHERWISE.
2. THE INFORMATION CONTAINED ON THIS DRAWING WAS OBTAINED FROM INFORMATION AND DRAWINGS THAT WERE PROVIDED BY THE CITY OF AUSTIN. THIS INFORMATION HAS NOT BEEN FIELD VERIFIED.

KEY NOTES:

1. THE EXISTING 480V POWER DISTRIBUTION PANEL IS MANUFACTURED BY "EATON ELECTRICAL", MODEL NO. "P4E250BT22TH00".
2. THE EXISTING 240/120V POWER DISTRIBUTION PANEL IS MANUFACTURED BY "EATON ELECTRICAL", MODEL NO. "P3C250BT26TH12".
3. THE EXISTING 130VDC POWER DISTRIBUTION BUS IS MANUFACTURED BY "EATON ELECTRICAL", MODEL NO. "P4D800BT36TH01".

BAR LENGTH ON ORIGINAL DRAWING EQUALS ONE INCH, ADJUST SCALE ACCORDINGLY.

REUSE OF DOCUMENTS

This document, and the designs incorporated herein, is an instrument of professional service that has been developed, designed and prepared by Harutunian Engineering, Inc., and is not to be used, in whole or in part, for any other project without giving written notice to Harutunian Engineering, Inc.

NO.	DATE:	DESCRIPTION

HARUTUNIAN ENGINEERING INCORPORATED
TEXAS FIRM REGISTRATION NUMBER F-2408
ENGINEERING AND ENVIRONMENTAL CONSULTANTS
8100 CROSS PARK DRIVE
AUSTIN, TEXAS 78754

STATE OF TEXAS · SHANT HARUTUNIAN · 87735 · REGISTERED · PROFESSIONAL ENGINEER · 10/7/2019

DESIGNED BY:	HEI
CHECKED BY:	HEI
APPROVED BY:	HEI
SUBMITTAL DATE:	OCTOBER 2019
SCALE:	AS SHOWN

SOUTH AUSTIN REGIONAL WASTEWATER TREATMENT PLANT
ELECTRICAL SUBSTATION NO. 1 REPLACEMENT PROJECT
CIP I.D.# 3333.032

ELECTRICAL SUBSTATION NO. 2 DETAILED ONE-LINE DIAGRAM DEMOLITION (SHEET 11 OF 11)

PROJECT NO: 2014-300 | SHT. 723 OF 866 | DWG NO. SUB2-E-040

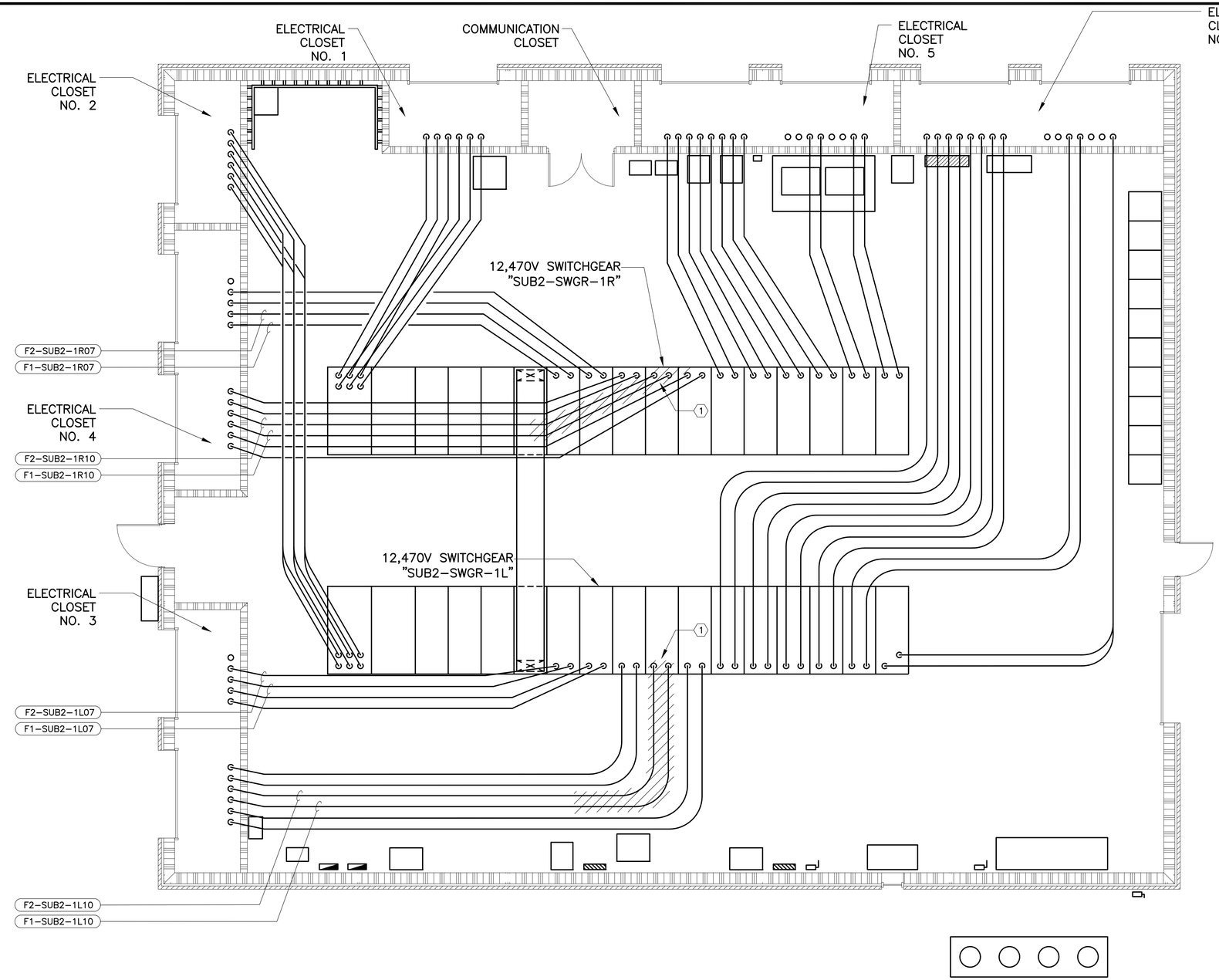

KEY NOTES:

1. DISCONNECT AND REMOVE EMPTY SPARE CONDUIT FROM SWITCHGEAR TO NEAREST COUPLING IN APPROXIMATELY IN THE LOCATION SHOWN ON THE DRAWING AND NOT IN CONFLICT WITH THE PROPOSED CONDUIT TO BE INSTALLED DURING RENOVATION ACTIVITIES. REFER TO RENOVATION DRAWINGS FOR ADDITIONAL INFORMATION.

GENERAL NOTES:

1. ALL ELECTRICAL EQUIPMENT, WIRING, CONDUITS, ETC., SHOWN ON THIS DRAWING ARE EXISTING UNLESS NOTED OTHERWISE.
2. THE INFORMATION CONTAINED ON THIS DRAWING WAS OBTAINED FROM INFORMATION AND DRAWINGS THAT WERE PROVIDED BY THE CITY OF AUSTIN. THIS INFORMATION HAS NOT BEEN FIELD VERIFIED.

N

PLANT NORTH

SUBSTATION NO. 2

SCALE: 3/16" = 1'

BAR LENGTH ON ORIGINAL DRAWING EQUALS ONE INCH, ADJUST SCALE ACCORDINGLY.

REUSE OF DOCUMENTS

This document, and the designs incorporated herein, is an instrument of professional service that has been developed, designed and prepared by Harutunian Engineering, Inc., and is not to be used, in whole or in part, for any other project without giving written notice to Harutunian Engineering, Inc.

NO.	DATE:	DESCRIPTION

HARUTUNIAN ENGINEERING INCORPORATED

TEXAS FIRM REGISTRATION NUMBER F-2408

ENGINEERING AND ENVIRONMENTAL CONSULTANTS
8100 CROSS PARK DRIVE
AUSTIN, TEXAS 78754

STATE OF TEXAS
SHANT HARUTUNIAN
87735
REGISTERED
PROFESSIONAL ENGINEER
10/7/2019

DESIGNED BY:	HEI
CHECKED BY:	HEI
APPROVED BY:	HEI
SUBMITTAL DATE:	OCTOBER 2019
SCALE:	AS SHOWN

SOUTH AUSTIN REGIONAL WASTEWATER TREATMENT PLANT
ELECTRICAL SUBSTATION NO. 1 REPLACEMENT PROJECT
CIP I.D.# 3333.032

ELECTRICAL SUBSTATION NO. 2
15kV POWER CONDUIT ROUTING PLAN – DEMOLITION

PROJECT NO: 2014-300 | SHT. 724 OF 866 | DWG NO. SUB2-E-041

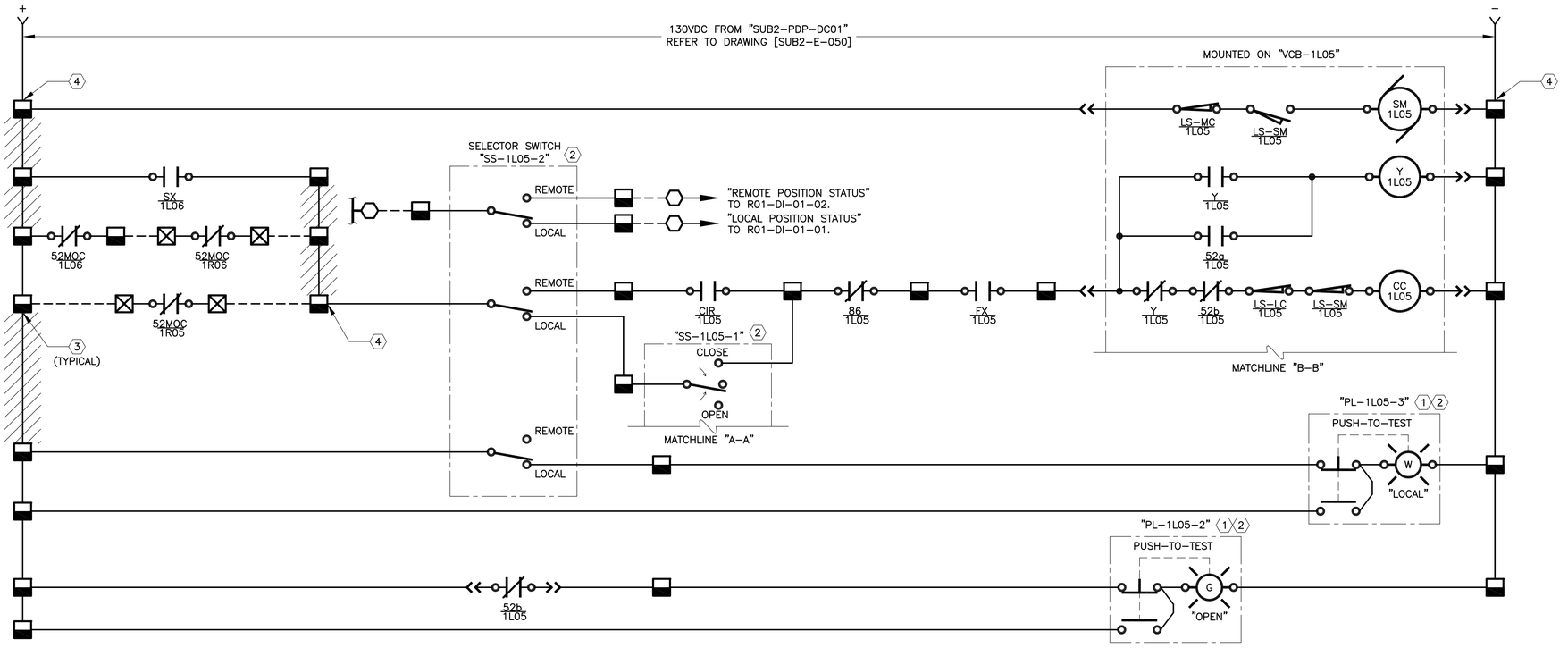

CONTROL LOGIC DEVICE LEGEND:

52a	BREAKER MOUNTED AUXILIARY CONTACT – OPEN WHEN BREAKER IS OPEN
52b	BREAKER MOUNTED AUXILIARY CONTACT – CLOSED WHEN BREAKER IS OPEN
52MOC	MECHANISM OPERATED CELL SWITCH – OPERATES AS AUXILIARY CONTACT WHEN BREAKER IS IN CONNECTED OR TEST POSITION
LS–MC	SPRING MOTOR CUTOFF SWITCH – OPEN WHEN BREAKER IS RACKED OUT
LS–SM	SPRING MOTOR LIMIT SWITCH – SHOWN WITH SPRINGS CHARGED – CHANGES STATES WHEN SPRING IS DISCHARGED
LS–LC	LATCH CHECK SWITCH – OPENS WHEN TRIP LATCH MOVES OUT OF ITS NORMAL POSITION
SM	SPRING CHARGING MOTOR
Y	ANTI–PUMP RELAY – PREVENTS ENERGIZATION OF CLOSE COIL WHEN ENERGIZED
CC	BREAKER CLOSE COIL – CLOSES BREAKER WHEN ENERGIZED
TC	BREAKER TRIP COIL – OPENS BREAKER WHEN ENERGIZED
86	PROTECTIVE RELAY TRIP LOCKOUT RELAY – MANUAL RESET
FX	PROTECTIVE RELAY FAILURE AUXILIARY RELAY – ENERGIZED WHEN PROTECTIVE RELAY STATUS IS OK
XX	PROTECTIVE RELAY XFER AUXILIARY RELAY
TOC	TRUCK OPERATED CONTACT – CONTACTS SHOWN WITH BREAKER RACKED OUT
SX	SYNC ENABLE AUXILIARY RELAY
S2L1PX	SUBSTATION MANAGEMENT RELAY PERMISSIVE OUTPUT AUXILIARY RELAY
S2L2PX	SUBSTATION MANAGEMENT RELAY PERMISSIVE OUTPUT AUXILIARY RELAY
PRMSV	BREAKER CLOSE PERMISSIVE AUXILIARY RELAY

KEY NOTES:

(1) INDICATING PILOT LIGHT WITH INTEGRAL MOMENTARY ACTION "PUSH–TO–TEST" PUSH BUTTON.

(2) MOUNTED ON FRONT OF PROPOSED SWITCHGEAR "SUB2–SWGR–1L" SECTION 1L05A.

(3) DISCONNECT WIRE FROM TERMINAL BLOCKS AND REMOVE.

(4) DISCONNECT WIRE FROM TERMINAL BLOCKS, WIRE TO REMAIN AND BE REUSED. REFER TO RENOVATION DRAWINGS.

BAR LENGTH ON ORIGINAL DRAWING EQUALS ONE INCH, ADJUST SCALE ACCORDINGLY.

REUSE OF DOCUMENTS

This document, and the designs incorporated herein, is an instrument of professional service that has been developed, designed and prepared by Harutunian Engineering, Inc., and is not to be used, in whole or in part, for any other project without giving written notice to Harutunian Engineering, Inc.

NO.	DATE:	DESCRIPTION

HARUTUNIAN ENGINEERING INCORPORATED
TEXAS FIRM REGISTRATION NUMBER F-2408
ENGINEERING AND ENVIRONMENTAL CONSULTANTS
8100 CROSS PARK DRIVE
AUSTIN, TEXAS 78754

STATE OF TEXAS
SHANT HARUTUNIAN
87735
REGISTERED
PROFESSIONAL ENGINEER
10/7/2019

DESIGNED BY:	HEI
CHECKED BY:	HEI
APPROVED BY:	HEI
SUBMITTAL DATE:	OCTOBER 2019
SCALE:	AS SHOWN

SOUTH AUSTIN REGIONAL WASTEWATER TREATMENT PLANT
ELECTRICAL SUBSTATION NO. 1 REPLACEMENT PROJECT
CIP I.D.# 3333.032

ELECTRICAL SUBSTATION NO. 2
SUB2–SWGR–1L MAIN BREAKER "VCB–1L05"
CONTROL LOGIC – DEMOLITION

PROJECT NO: 2014–300 | SHT. 725 OF 866 | DWG NO. SUB2–E–042

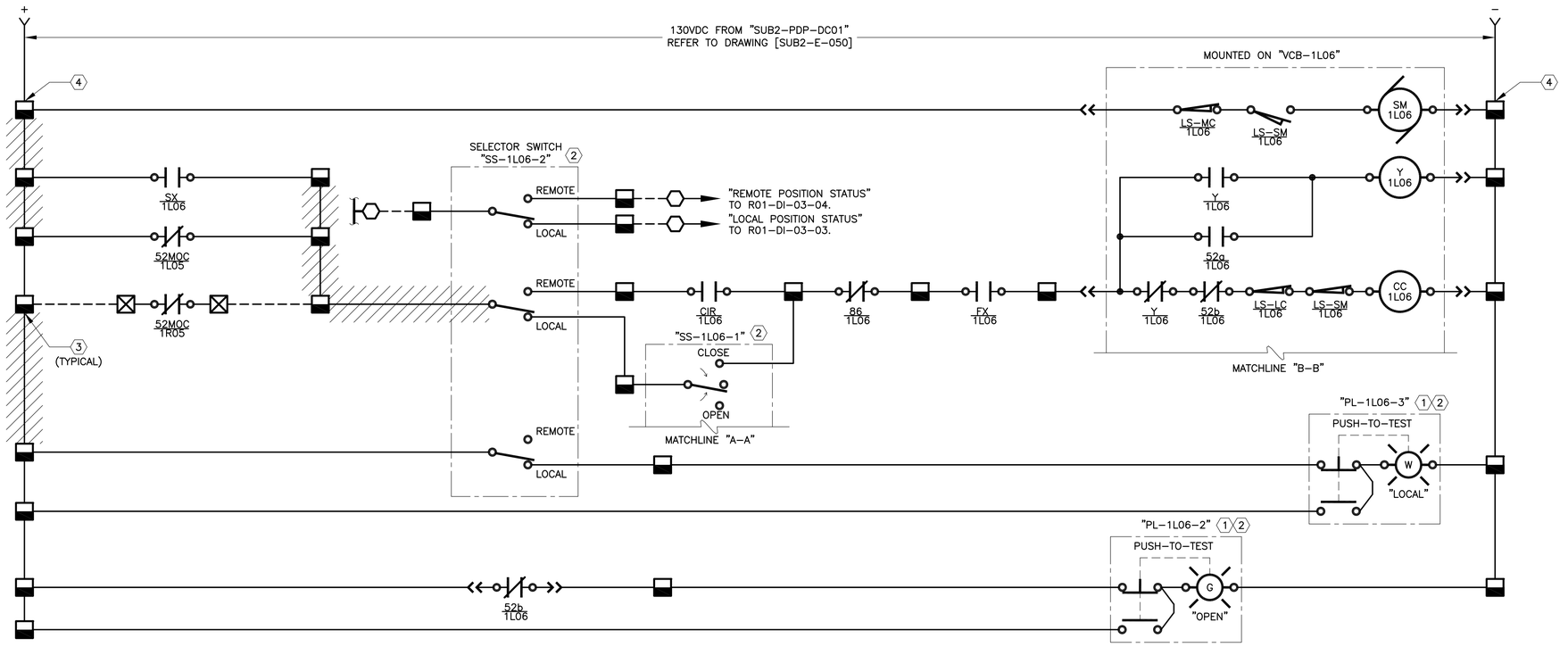

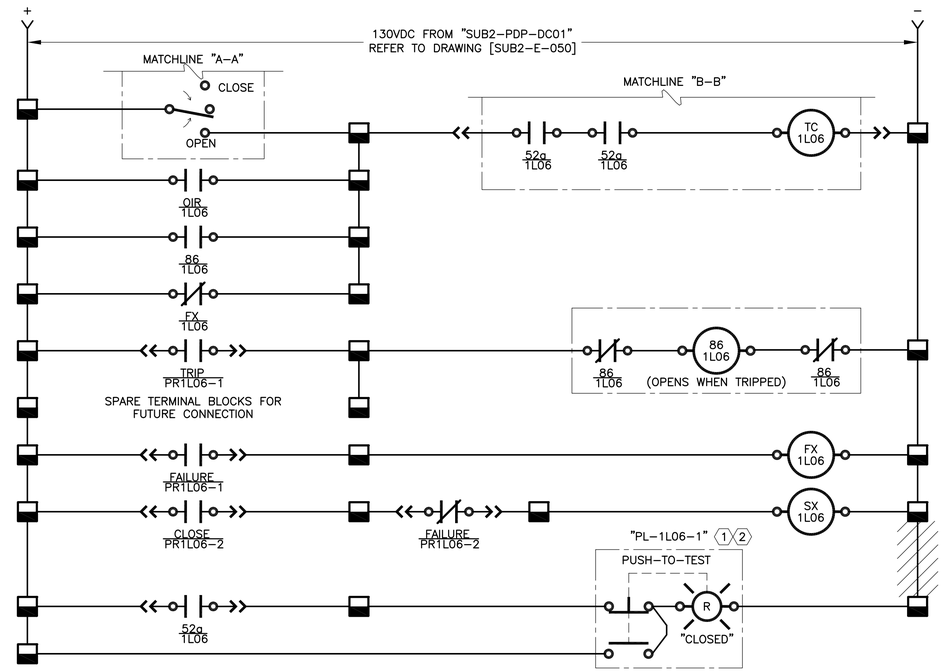

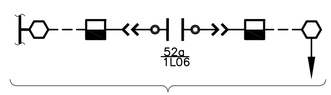

"BREAKER CLOSED" STATUS TO R01-DI-03-05.

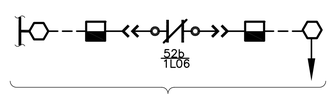

"BREAKER OPEN" STATUS TO R01-DI-03-06.

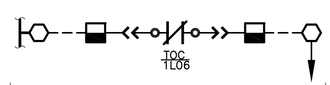

"BREAKER TRUCK POSITION" STATUS TO R01-DI-03-10.

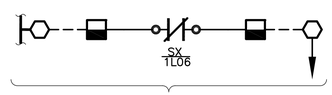

"SYNC CHECK RELAY" STATUS TO R01-DI-03-09.

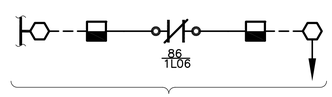

"LOCKOUT" STATUS TO R01-DI-03-07.

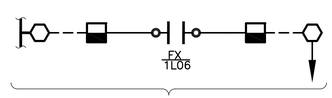

"PROTECTIVE RELAY FAILURE" STATUS TO R01-DI-03-08.

CONTROL LOGIC DEVICE LEGEND:

52a	BREAKER MOUNTED AUXILIARY CONTACT – OPEN WHEN BREAKER IS OPEN
52b	BREAKER MOUNTED AUXILIARY CONTACT – CLOSED WHEN BREAKER IS OPEN
52MOC	MECHANISM OPERATED CELL SWITCH – OPERATES AS AUXILIARY CONTACT WHEN BREAKER IS IN CONNECTED OR TEST POSITION
LS-MC	SPRING MOTOR CUTOFF SWITCH – OPEN WHEN BREAKER IS RACKED OUT
LS-SM	SPRING MOTOR LIMIT SWITCH – SHOWN WITH SPRINGS CHARGED – CHANGES STATES WHEN SPRING IS DISCHARGED
LS-LC	LATCH CHECK SWITCH – OPENS WHEN TRIP LATCH MOVES OUT OF ITS NORMAL POSITION
SM	SPRING CHARGING MOTOR
Y	ANTI-PUMP RELAY – PREVENTS ENERGIZATION OF CLOSE COIL WHEN ENERGIZED
CC	BREAKER CLOSE COIL – CLOSES BREAKER WHEN ENERGIZED
TC	BREAKER TRIP COIL – OPENS BREAKER WHEN ENERGIZED
86	PROTECTIVE RELAY TRIP LOCKOUT RELAY – MANUAL RESET
FX	PROTECTIVE RELAY FAILURE AUXILIARY RELAY – ENERGIZED WHEN PROTECTIVE RELAY STATUS IS OK
XX	PROTECTIVE RELAY XFER AUXILIARY RELAY
TOC	TRUCK OPERATED CONTACT – CONTACTS SHOWN WITH BREAKER RACKED OUT
SX	SYNC ENABLE AUXILIARY RELAY
S2L1PX	SUBSTATION MANAGEMENT RELAY PERMISSIVE OUTPUT AUXILIARY RELAY
S2L2PX	SUBSTATION MANAGEMENT RELAY PERMISSIVE OUTPUT AUXILIARY RELAY
PRMSV	BREAKER CLOSE PERMISSIVE AUXILIARY RELAY

KEY NOTES:

1. INDICATING PILOT LIGHT WITH INTEGRAL MOMENTARY ACTION "PUSH-TO-TEST" PUSH BUTTON.
2. MOUNTED ON FRONT OF PROPOSED SWITCHGEAR "SUB2-SWGR-1L" SECTION 1L06A.
3. DISCONNECT WIRE FROM TERMINAL BLOCKS AND REMOVE.
4. DISCONNECT WIRE FROM TERMINAL BLOCKS, WIRE TO REMAIN AND BE REUSED. REFER TO RENOVATION DRAWINGS.

BAR LENGTH ON ORIGINAL DRAWING EQUALS ONE INCH, ADJUST SCALE ACCORDINGLY.

REUSE OF DOCUMENTS

This document, and the designs incorporated herein, is an instrument of professional service that has been developed, designed and prepared by Harutunian Engineering, Inc., and is not to be used, in whole or in part, for any other project without giving written notice to Harutunian Engineering, Inc.

NO.	DATE:	DESCRIPTION

HARUTUNIAN ENGINEERING INCORPORATED
TEXAS FIRM REGISTRATION NUMBER F-2408
ENGINEERING AND ENVIRONMENTAL CONSULTANTS
8100 CROSS PARK DRIVE
AUSTIN, TEXAS 78754

STATE OF TEXAS
SHANT HARUTUNIAN
87735
REGISTERED
PROFESSIONAL ENGINEER
10/7/2019

DESIGNED BY:	HEI
CHECKED BY:	HEI
APPROVED BY:	HEI
SUBMITTAL DATE:	OCTOBER 2019
SCALE:	AS SHOWN

SOUTH AUSTIN REGIONAL WASTEWATER TREATMENT PLANT
ELECTRICAL SUBSTATION NO. 1 REPLACEMENT PROJECT
CIP I.D.# 3333.032

ELECTRICAL SUBSTATION NO. 2
SUB2-SWGR-1L TIE BREAKER "VCB-1L06"
CONTROL LOGIC – DEMOLITION

PROJECT NO: 2014-300 | SHT. 726 OF 866 | DWG NO. SUB2-E-043

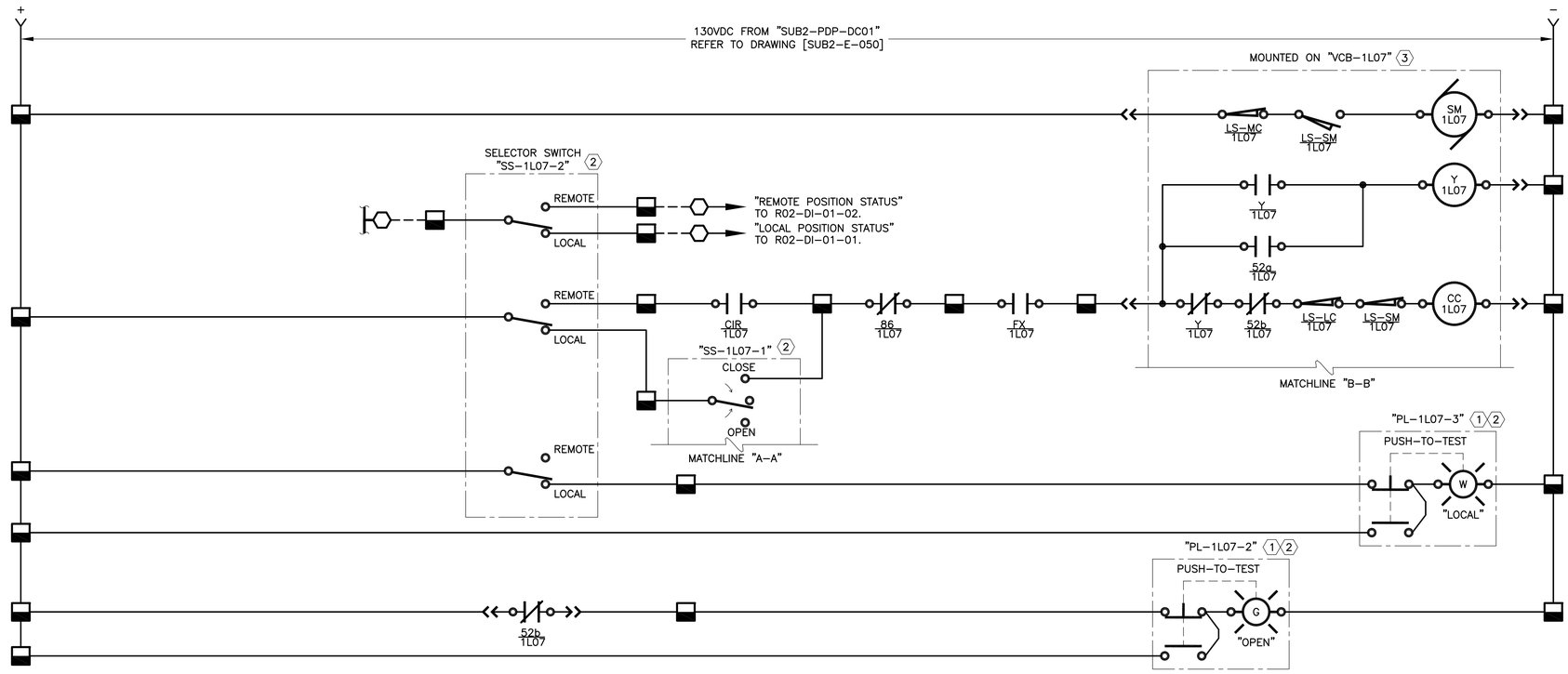

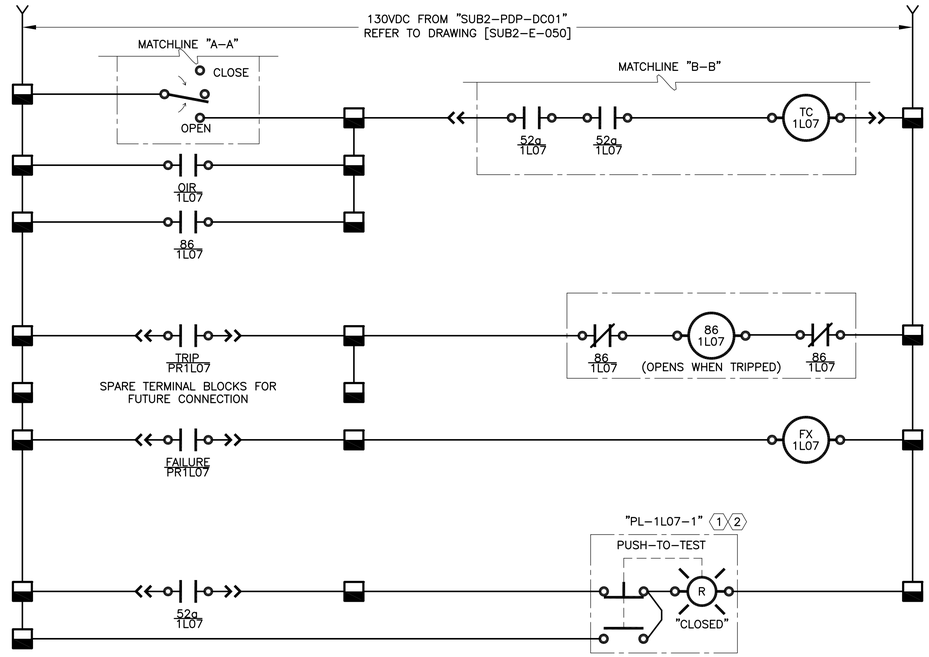

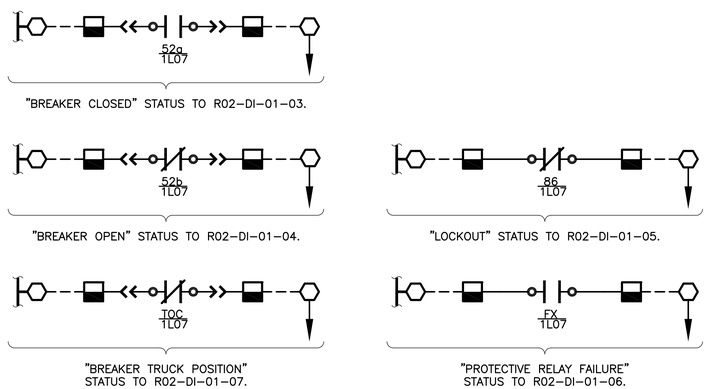

CONTROL LOGIC DEVICE LEGEND:

52a	BREAKER MOUNTED AUXILIARY CONTACT – OPEN WHEN BREAKER IS OPEN
52b	BREAKER MOUNTED AUXILIARY CONTACT – CLOSED WHEN BREAKER IS OPEN
52MOC	MECHANISM OPERATED CELL SWITCH – OPERATES AS AUXILIARY CONTACT WHEN BREAKER IS IN CONNECTED OR TEST POSITION
LS-MC	SPRING MOTOR CUTOFF SWITCH – OPEN WHEN BREAKER IS RACKED OUT
LS-SM	SPRING MOTOR LIMIT SWITCH – SHOWN WITH SPRINGS CHARGED – CHANGES STATES WHEN SPRING IS DISCHARGED
LS-LC	LATCH CHECK SWITCH – OPENS WHEN TRIP LATCH MOVES OUT OF ITS NORMAL POSITION
SM	SPRING CHARGING MOTOR
Y	ANTI-PUMP RELAY – PREVENTS ENERGIZATION OF CLOSE COIL WHEN ENERGIZED
CC	BREAKER CLOSE COIL – CLOSES BREAKER WHEN ENERGIZED
TC	BREAKER TRIP COIL – OPENS BREAKER WHEN ENERGIZED
86	PROTECTIVE RELAY TRIP LOCKOUT RELAY – MANUAL RESET
FX	PROTECTIVE RELAY FAILURE AUXILIARY RELAY – ENERGIZED WHEN PROTECTIVE RELAY STATUS IS OK
XX	PROTECTIVE RELAY XFER AUXILIARY RELAY
TOC	TRUCK OPERATED CONTACT – CONTACTS SHOWN WITH BREAKER RACKED OUT
SX	SYNC ENABLE AUXILIARY RELAY
S2L1PX	SUBSTATION MANAGEMENT RELAY PERMISSIVE OUTPUT AUXILIARY RELAY
S2L2PX	SUBSTATION MANAGEMENT RELAY PERMISSIVE OUTPUT AUXILIARY RELAY
PRMSV	BREAKER CLOSE PERMISSIVE AUXILIARY RELAY

KEY NOTES:

(1) INDICATING PILOT LIGHT WITH INTEGRAL MOMENTARY ACTION "PUSH-TO-TEST" PUSH BUTTON.

(2) MOUNTED ON FRONT OF PROPOSED SWITCHGEAR "SUB2-SWGR-1L" SECTION 1L07A.

(3) MEDIUM VOLTAGE CIRCUIT BREAKER IS NOT INSTALLED IN THIS SECTION. SHOWN HERE FOR CLARITY.

BAR LENGTH ON ORIGINAL DRAWING EQUALS ONE INCH, ADJUST SCALE ACCORDINGLY.

REUSE OF DOCUMENTS

This document, and the designs incorporated herein, is an instrument of professional service that has been developed, designed and prepared by Harutunian Engineering, Inc., and is not to be used, in whole or in part, for any other project without giving written notice to Harutunian Engineering, Inc.

NO.	DATE:	DESCRIPTION

HARUTUNIAN ENGINEERING INCORPORATED
TEXAS FIRM REGISTRATION NUMBER F-2408
ENGINEERING AND ENVIRONMENTAL CONSULTANTS
8100 CROSS PARK DRIVE
AUSTIN, TEXAS 78754

STATE OF TEXAS
SHANT HARUTUNIAN
87735
REGISTERED
PROFESSIONAL ENGINEER
10/7/2019

DESIGNED BY:	HEI
CHECKED BY:	HEI
APPROVED BY:	HEI
SUBMITTAL DATE:	OCTOBER 2019
SCALE:	AS SHOWN

SOUTH AUSTIN REGIONAL WASTEWATER TREATMENT PLANT
ELECTRICAL SUBSTATION NO. 1 REPLACEMENT PROJECT
CIP I.D.# 3333.032

ELECTRICAL SUBSTATION NO. 2
SUB2-SWGR-1L FEEDER BREAKER "VCB-1L07"
CONTROL LOGIC – DEMOLITION

PROJECT NO: 2014-300 | SHT. 727 OF 866 | DWG NO. SUB2-E-044

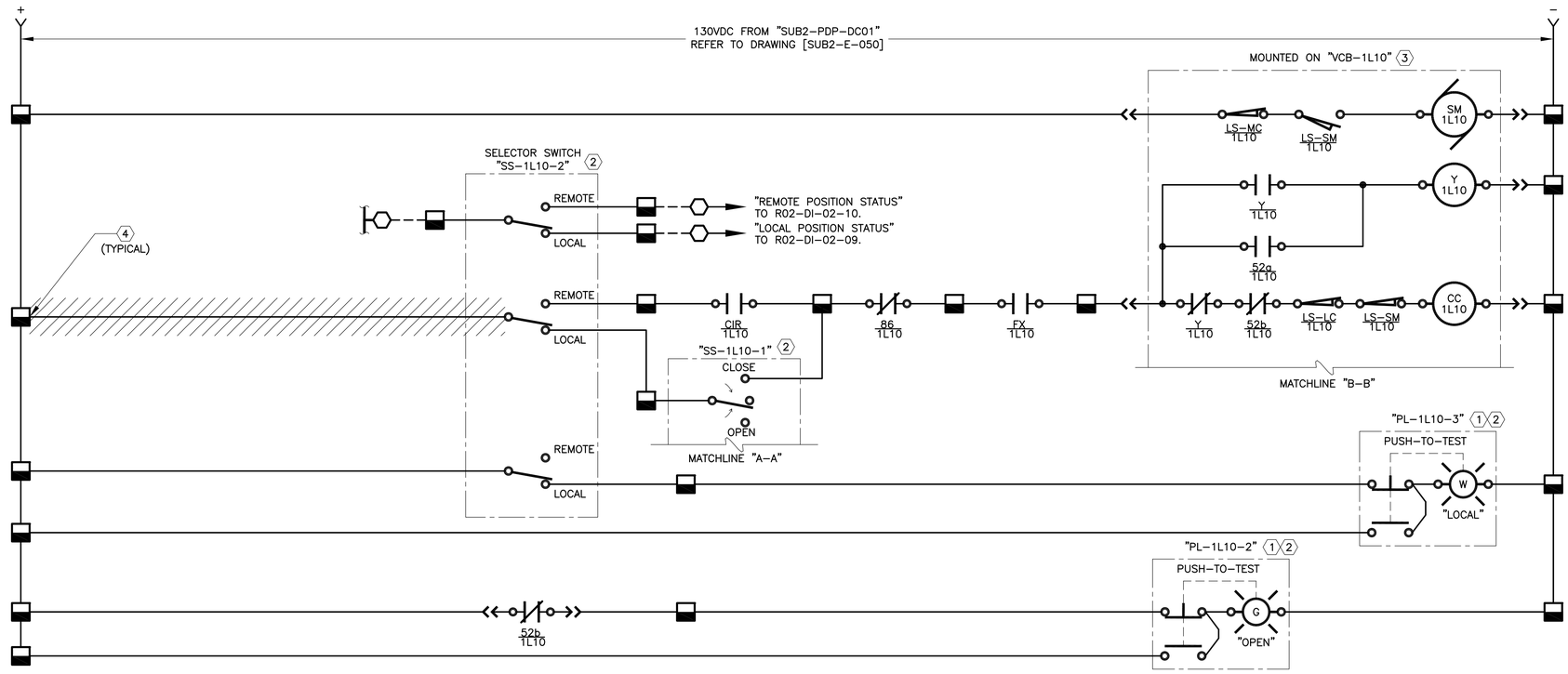

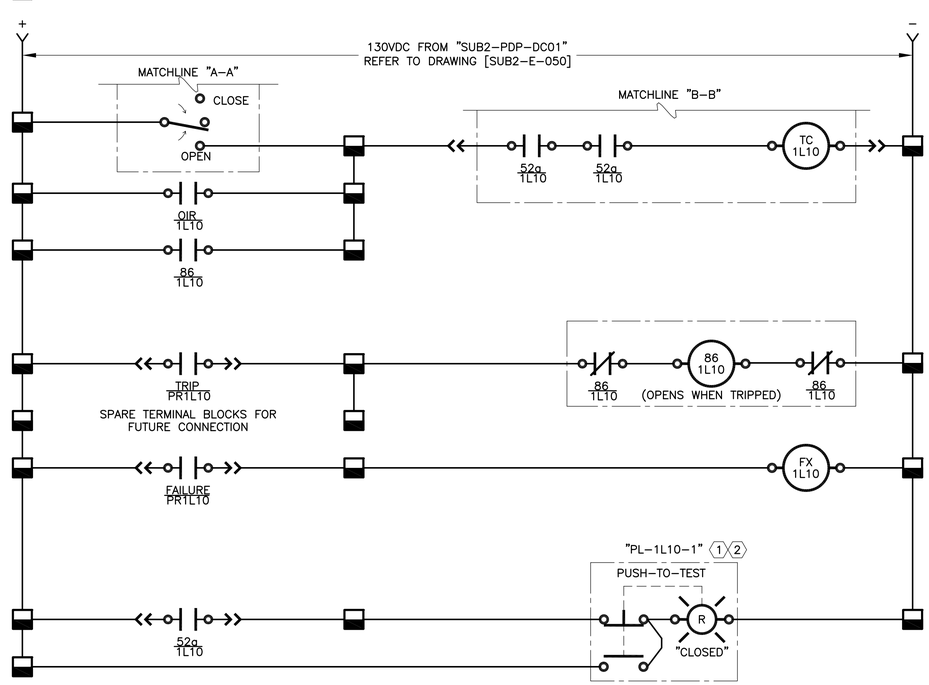

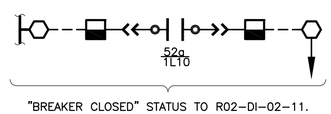

"BREAKER CLOSED" STATUS TO R02-DI-02-11.

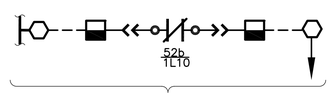

"BREAKER OPEN" STATUS TO R02-DI-02-12.

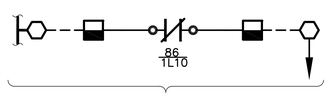

"LOCKOUT" STATUS TO R02-DI-02-13.

"BREAKER TRUCK POSITION" STATUS TO R02-DI-02-15.

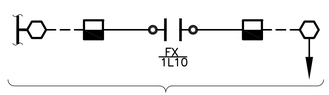

"PROTECTIVE RELAY FAILURE" STATUS TO R02-DI-02-14.

CONTROL LOGIC DEVICE LEGEND:

52a	BREAKER MOUNTED AUXILIARY CONTACT – OPEN WHEN BREAKER IS OPEN
52b	BREAKER MOUNTED AUXILIARY CONTACT – CLOSED WHEN BREAKER IS OPEN
52MOC	MECHANISM OPERATED CELL SWITCH – OPERATES AS AUXILIARY CONTACT WHEN BREAKER IS IN CONNECTED OR TEST POSITION
LS-MC	SPRING MOTOR CUTOFF SWITCH – OPEN WHEN BREAKER IS RACKED OUT
LS-SM	SPRING MOTOR LIMIT SWITCH – SHOWN WITH SPRINGS CHARGED – CHANGES STATES WHEN SPRING IS DISCHARGED
LS-LC	LATCH CHECK SWITCH – OPENS WHEN TRIP LATCH MOVES OUT OF ITS NORMAL POSITION
SM	SPRING CHARGING MOTOR
Y	ANTI-PUMP RELAY – PREVENTS ENERGIZATION OF CLOSE COIL WHEN ENERGIZED
CC	BREAKER CLOSE COIL – CLOSES BREAKER WHEN ENERGIZED
TC	BREAKER TRIP COIL – OPENS BREAKER WHEN ENERGIZED
86	PROTECTIVE RELAY TRIP LOCKOUT RELAY – MANUAL RESET
FX	PROTECTIVE RELAY FAILURE AUXILIARY RELAY – ENERGIZED WHEN PROTECTIVE RELAY STATUS IS OK
XX	PROTECTIVE RELAY XFER AUXILIARY RELAY
TOC	TRUCK OPERATED CONTACT – CONTACTS SHOWN WITH BREAKER RACKED OUT
SX	SYNC ENABLE AUXILIARY RELAY
S2L1PX	SUBSTATION MANAGEMENT RELAY PERMISSIVE OUTPUT AUXILIARY RELAY
S2L2PX	SUBSTATION MANAGEMENT RELAY PERMISSIVE OUTPUT AUXILIARY RELAY
PRMSV	BREAKER CLOSE PERMISSIVE AUXILIARY RELAY

KEY NOTES:

1. INDICATING PILOT LIGHT WITH INTEGRAL MOMENTARY ACTION "PUSH-TO-TEST" PUSH BUTTON.
2. MOUNTED ON FRONT OF PROPOSED SWITCHGEAR "SUB2-SWGR-1L" SECTION 1L10A.
3. MEDIUM VOLTAGE CIRCUIT BREAKER IS NOT INSTALLED IN THIS SECTION. SHOWN HERE FOR CLARITY.
4. DISCONNECT WIRE FROM TERMINAL BLOCKS AND REMOVE.

BAR LENGTH ON ORIGINAL DRAWING EQUALS ONE INCH, ADJUST SCALE ACCORDINGLY.

REUSE OF DOCUMENTS

This document, and the designs incorporated herein, is an instrument of professional service that has been developed, designed and prepared by Harutunian Engineering, Inc., and is not to be used, in whole or in part, for any other project without giving written notice to Harutunian Engineering, Inc.

NO.	DATE:	DESCRIPTION

HARUTUNIAN ENGINEERING INCORPORATED
TEXAS FIRM REGISTRATION NUMBER F-2408
ENGINEERING AND ENVIRONMENTAL CONSULTANTS
8100 CROSS PARK DRIVE
AUSTIN, TEXAS 78754

STATE OF TEXAS
SHANT HARUTUNIAN
87735
REGISTERED
PROFESSIONAL ENGINEER
10/7/2019

DESIGNED BY:	HEI
CHECKED BY:	HEI
APPROVED BY:	HEI
SUBMITTAL DATE:	OCTOBER 2019
SCALE:	AS SHOWN

SOUTH AUSTIN REGIONAL WASTEWATER TREATMENT PLANT
ELECTRICAL SUBSTATION NO. 1 REPLACEMENT PROJECT
CIP I.D.# 3333.032

ELECTRICAL SUBSTATION NO. 2
SUB2-SWGR-1L FEEDER BREAKER "VCB-1L10"
CONTROL LOGIC – DEMOLITION

PROJECT NO: 2014-300 | SHT. 728 OF 866 | DWG NO. SUB2-E-045

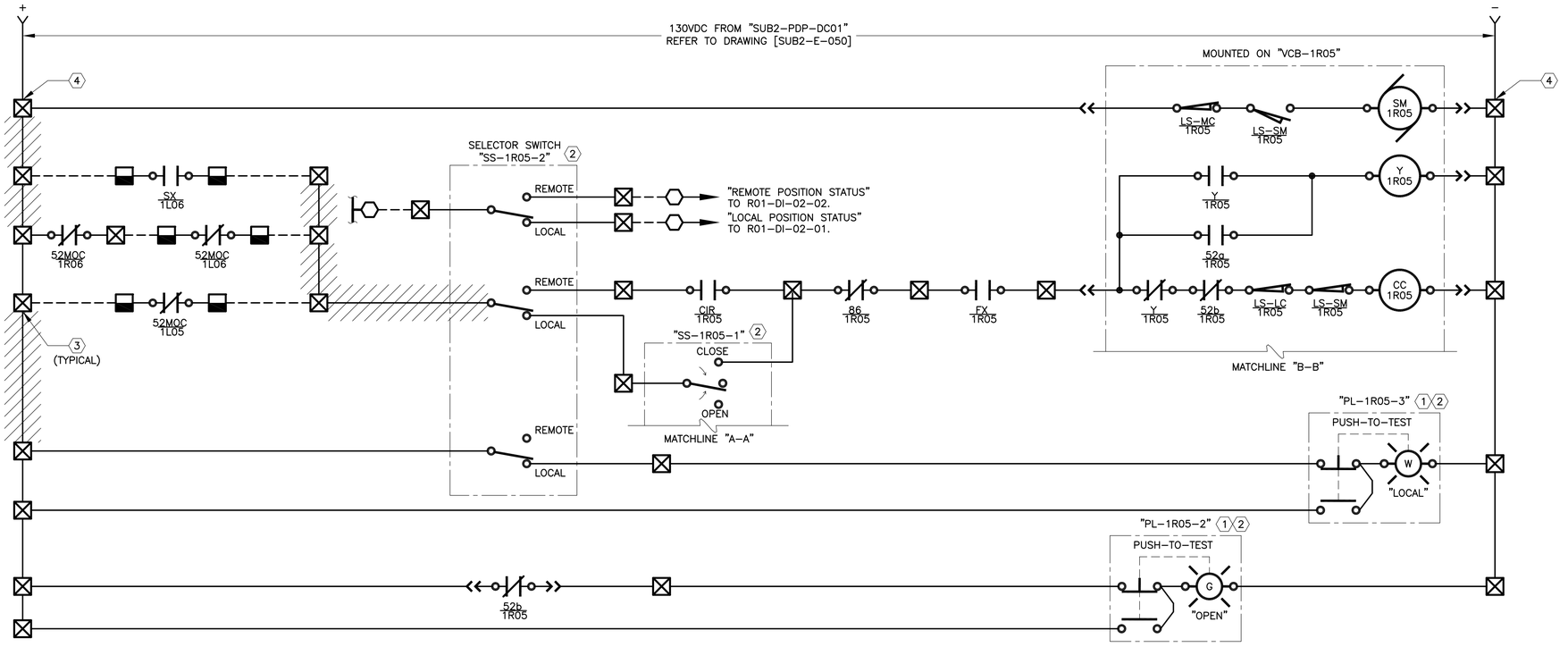

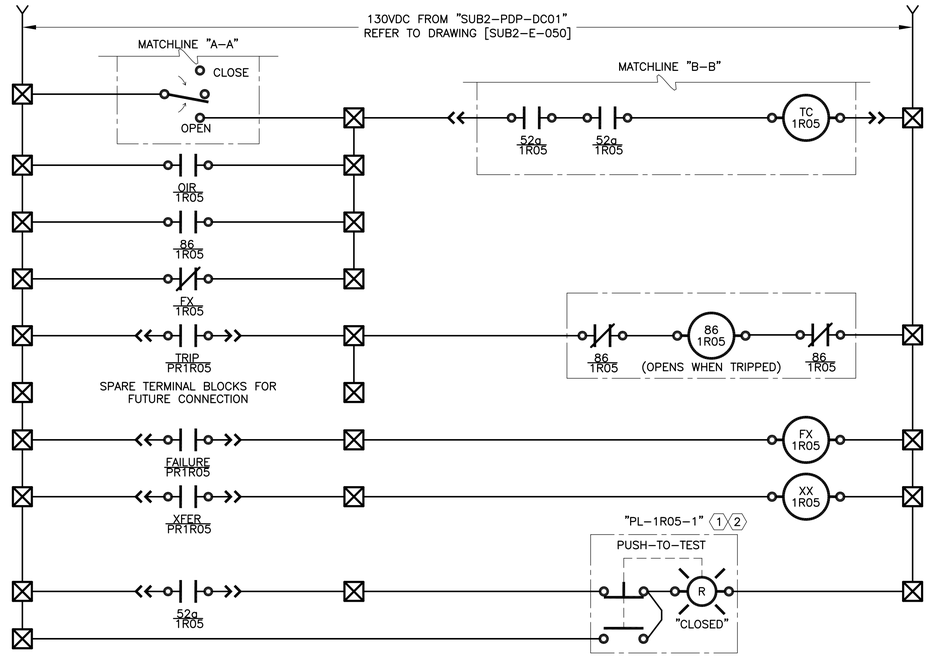

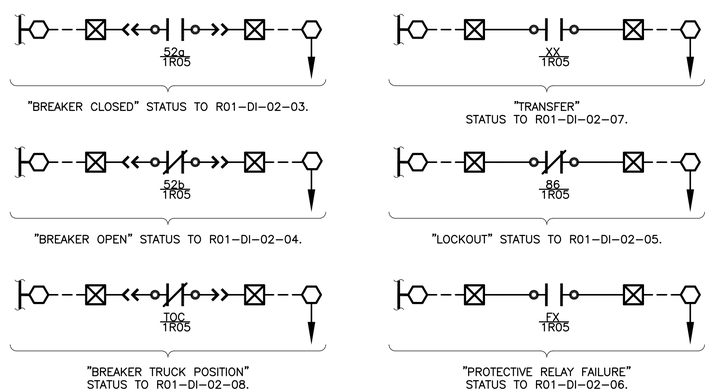

CONTROL LOGIC DEVICE LEGEND:

52a	BREAKER MOUNTED AUXILIARY CONTACT – OPEN WHEN BREAKER IS OPEN
52b	BREAKER MOUNTED AUXILIARY CONTACT – CLOSED WHEN BREAKER IS OPEN
52MOC	MECHANISM OPERATED CELL SWITCH – OPERATES AS AUXILIARY CONTACT WHEN BREAKER IS IN CONNECTED OR TEST POSITION
LS-MC	SPRING MOTOR CUTOFF SWITCH – OPEN WHEN BREAKER IS RACKED OUT
LS-SM	SPRING MOTOR LIMIT SWITCH – SHOWN WITH SPRINGS CHARGED – CHANGES STATES WHEN SPRING IS DISCHARGED
LS-LC	LATCH CHECK SWITCH – OPENS WHEN TRIP LATCH MOVES OUT OF ITS NORMAL POSITION
SM	SPRING CHARGING MOTOR
Y	ANTI-PUMP RELAY – PREVENTS ENERGIZATION OF CLOSE COIL WHEN ENERGIZED
CC	BREAKER CLOSE COIL – CLOSES BREAKER WHEN ENERGIZED
TC	BREAKER TRIP COIL – OPENS BREAKER WHEN ENERGIZED
86	PROTECTIVE RELAY TRIP LOCKOUT RELAY – MANUAL RESET
FX	PROTECTIVE RELAY FAILURE AUXILIARY RELAY – ENERGIZED WHEN PROTECTIVE RELAY STATUS IS OK
XX	PROTECTIVE RELAY XFER AUXILIARY RELAY
TOC	TRUCK OPERATED CONTACT – CONTACTS SHOWN WITH BREAKER RACKED OUT
SX	SYNC ENABLE AUXILIARY RELAY
S2L1PX	SUBSTATION MANAGEMENT RELAY PERMISSIVE OUTPUT AUXILIARY RELAY
S2L2PX	SUBSTATION MANAGEMENT RELAY PERMISSIVE OUTPUT AUXILIARY RELAY
PRMSV	BREAKER CLOSE PERMISSIVE AUXILIARY RELAY

KEY NOTES:

1. INDICATING PILOT LIGHT WITH INTEGRAL MOMENTARY ACTION "PUSH-TO-TEST" PUSH BUTTON.
2. MOUNTED ON FRONT OF PROPOSED SWITCHGEAR "SUB2-SWGR-1R" SECTION 1R05A.
3. DISCONNECT WIRE FROM TERMINAL BLOCKS AND REMOVE.
4. DISCONNECT WIRE FROM TERMINAL BLOCKS, WIRE TO REMAIN AND BE REUSED. REFER TO RENOVATION DRAWINGS.

BAR LENGTH ON ORIGINAL DRAWING EQUALS ONE INCH, ADJUST SCALE ACCORDINGLY.

REUSE OF DOCUMENTS

This document, and the designs incorporated herein, is an instrument of professional service that has been developed, designed and prepared by Harutunian Engineering, Inc., and is not to be used, in whole or in part, for any other project without giving written notice to Harutunian Engineering, Inc.

NO.	DATE:	DESCRIPTION

HARUTUNIAN ENGINEERING INCORPORATED
TEXAS FIRM REGISTRATION NUMBER F-2408
ENGINEERING AND ENVIRONMENTAL CONSULTANTS
8100 CROSS PARK DRIVE
AUSTIN, TEXAS 78754

STATE OF TEXAS · SHANT HARUTUNIAN · 87735 · REGISTERED PROFESSIONAL ENGINEER
10/7/2019

DESIGNED BY:	HEI
CHECKED BY:	HEI
APPROVED BY:	HEI
SUBMITTAL DATE:	OCTOBER 2019
SCALE:	AS SHOWN

SOUTH AUSTIN REGIONAL WASTEWATER TREATMENT PLANT
ELECTRICAL SUBSTATION NO. 1 REPLACEMENT PROJECT
CIP I.D.# 3333.032

ELECTRICAL SUBSTATION NO. 2
SUB2-SWGR-1R MAIN BREAKER "VCB-1R05"
CONTROL LOGIC – DEMOLITION

PROJECT NO: 2014-300 | SHT. 729 OF 866 | DWG NO. SUB2-E-046

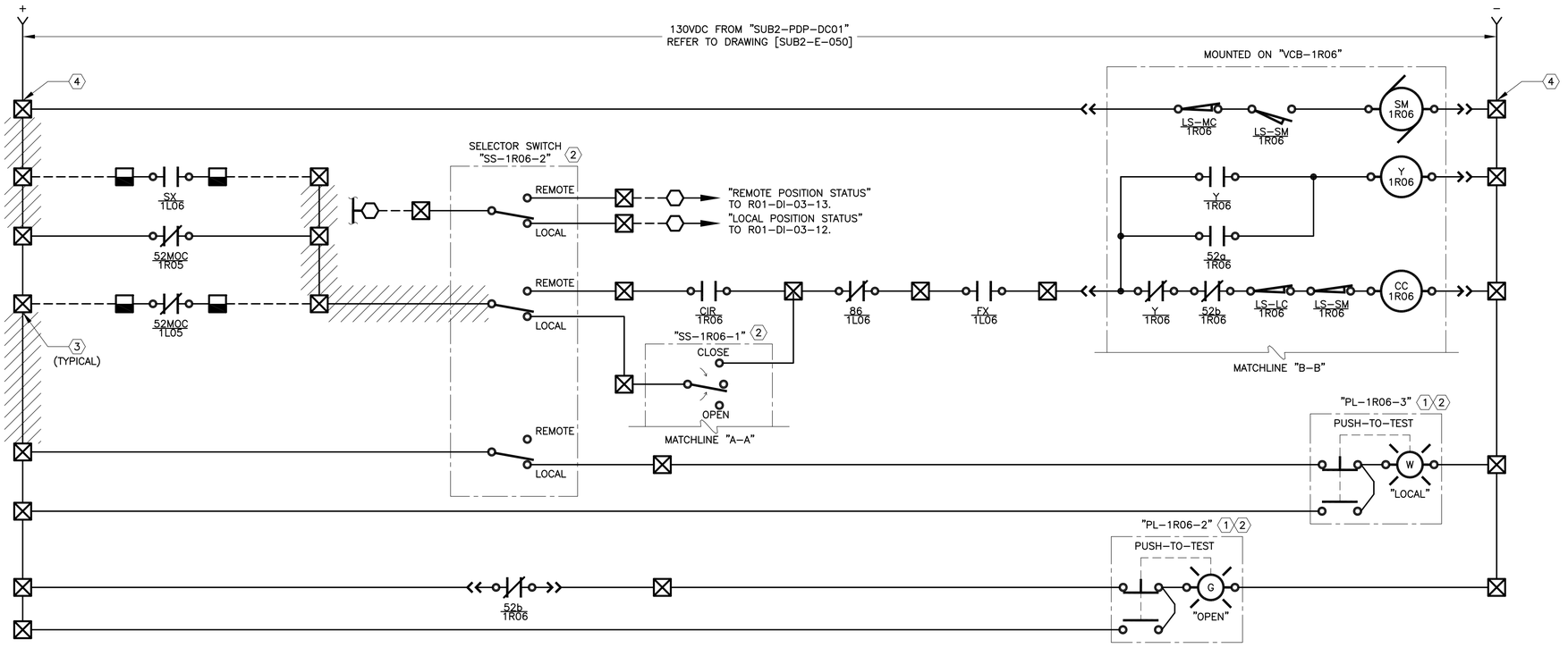

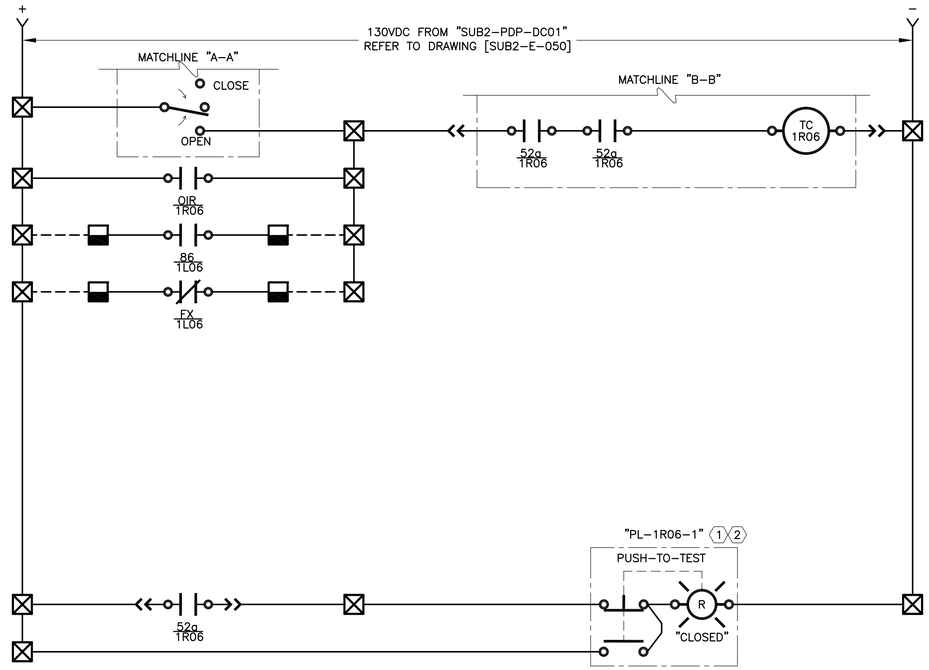

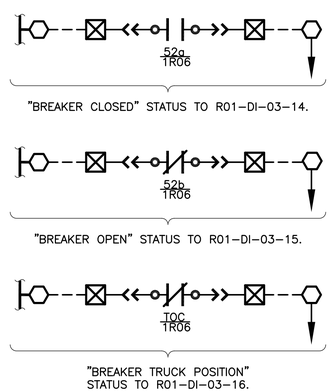

CONTROL LOGIC DEVICE LEGEND:

52a	BREAKER MOUNTED AUXILIARY CONTACT – OPEN WHEN BREAKER IS OPEN
52b	BREAKER MOUNTED AUXILIARY CONTACT – CLOSED WHEN BREAKER IS OPEN
52MOC	MECHANISM OPERATED CELL SWITCH – OPERATES AS AUXILIARY CONTACT WHEN BREAKER IS IN CONNECTED OR TEST POSITION
LS-MC	SPRING MOTOR CUTOFF SWITCH – OPEN WHEN BREAKER IS RACKED OUT
LS-SM	SPRING MOTOR LIMIT SWITCH – SHOWN WITH SPRINGS CHARGED – CHANGES STATES WHEN SPRING IS DISCHARGED
LS-LC	LATCH CHECK SWITCH – OPENS WHEN TRIP LATCH MOVES OUT OF ITS NORMAL POSITION
SM	SPRING CHARGING MOTOR
Y	ANTI-PUMP RELAY – PREVENTS ENERGIZATION OF CLOSE COIL WHEN ENERGIZED
CC	BREAKER CLOSE COIL – CLOSES BREAKER WHEN ENERGIZED
TC	BREAKER TRIP COIL – OPENS BREAKER WHEN ENERGIZED
86	PROTECTIVE RELAY TRIP LOCKOUT RELAY – MANUAL RESET
FX	PROTECTIVE RELAY FAILURE AUXILIARY RELAY – ENERGIZED WHEN PROTECTIVE RELAY STATUS IS OK
XX	PROTECTIVE RELAY XFER AUXILIARY RELAY
TOC	TRUCK OPERATED CONTACT – CONTACTS SHOWN WITH BREAKER RACKED OUT
SX	SYNC ENABLE AUXILIARY RELAY
S2L1PX	SUBSTATION MANAGEMENT RELAY PERMISSIVE OUTPUT AUXILIARY RELAY
S2L2PX	SUBSTATION MANAGEMENT RELAY PERMISSIVE OUTPUT AUXILIARY RELAY
PRMSV	BREAKER CLOSE PERMISSIVE AUXILIARY RELAY

KEY NOTES:

1. INDICATING PILOT LIGHT WITH INTEGRAL MOMENTARY ACTION "PUSH-TO-TEST" PUSH BUTTON.
2. MOUNTED ON FRONT OF PROPOSED SWITCHGEAR "SUB2-SWGR-1R" SECTION 1R06A.
3. DISCONNECT WIRE FROM TERMINAL BLOCKS AND REMOVE.
4. DISCONNECT WIRE FROM TERMINAL BLOCKS, WIRE TO REMAIN AND BE REUSED. REFER TO RENOVATION DRAWINGS.

BAR LENGTH ON ORIGINAL DRAWING EQUALS ONE INCH, ADJUST SCALE ACCORDINGLY.

REUSE OF DOCUMENTS

This document, and the designs incorporated herein, is an instrument of professional service that has been developed, designed and prepared by Harutunian Engineering, Inc., and is not to be used, in whole or in part, for any other project without giving written notice to Harutunian Engineering, Inc.

NO.	DATE:	DESCRIPTION

HARUTUNIAN ENGINEERING INCORPORATED
TEXAS FIRM REGISTRATION NUMBER F-2408
ENGINEERING AND ENVIRONMENTAL CONSULTANTS
8100 CROSS PARK DRIVE
AUSTIN, TEXAS 78754

STATE OF TEXAS
SHANT HARUTUNIAN
87735
REGISTERED
PROFESSIONAL ENGINEER
10/7/2019

DESIGNED BY:	HEI
CHECKED BY:	HEI
APPROVED BY:	HEI
SUBMITTAL DATE:	OCTOBER 2019
SCALE:	AS SHOWN

SOUTH AUSTIN REGIONAL WASTEWATER TREATMENT PLANT
ELECTRICAL SUBSTATION NO. 1 REPLACEMENT PROJECT
CIP I.D.# 3333.032

ELECTRICAL SUBSTATION NO. 2
SUB2-SWGR-1R TIE BREAKER "VCB-1R06"
CONTROL LOGIC – DEMOLITION

PROJECT NO: 2014-300 | SHT. 730 OF 866 | DWG NO. SUB2-E-047

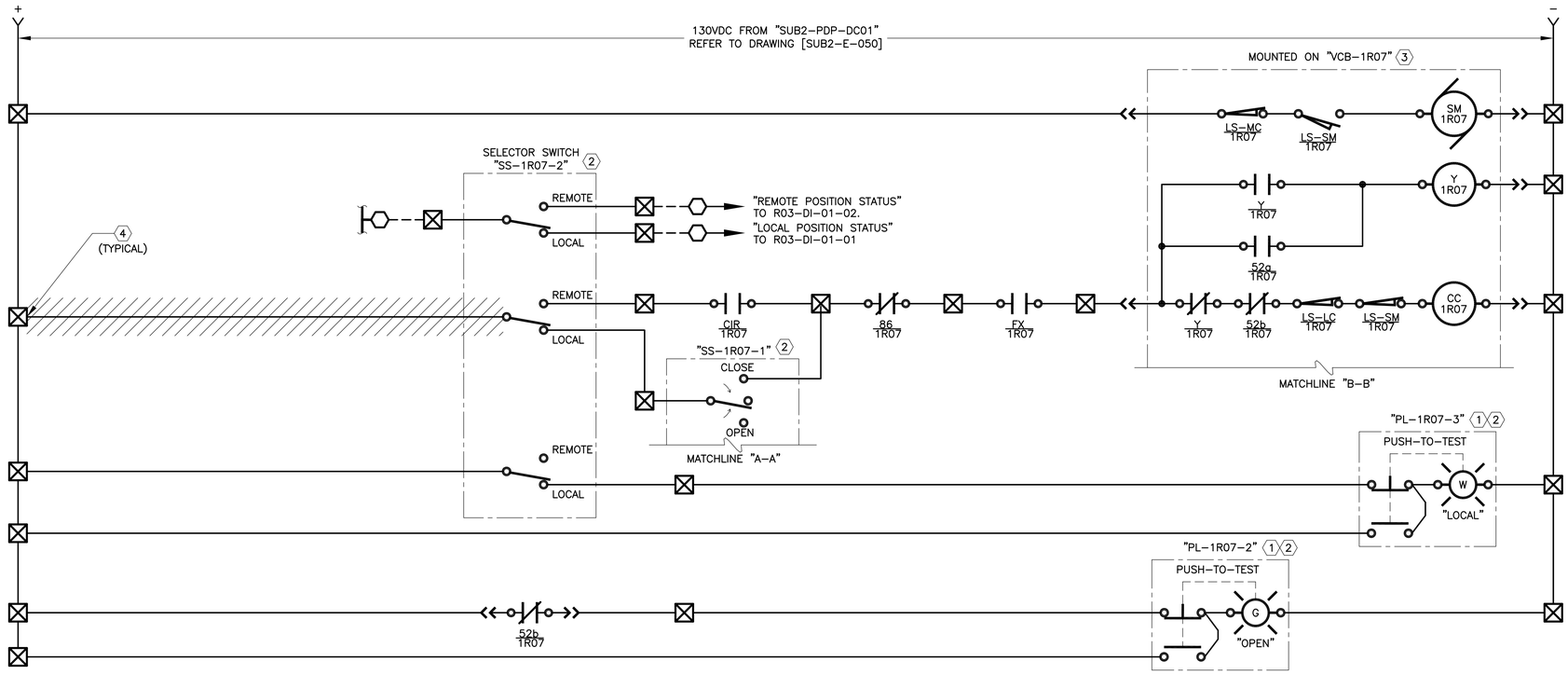

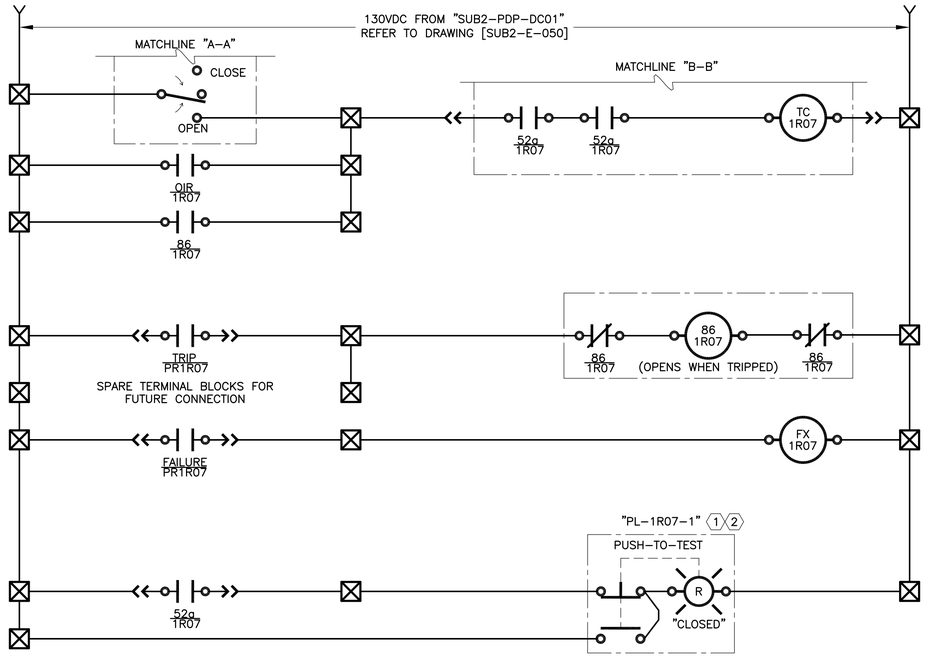

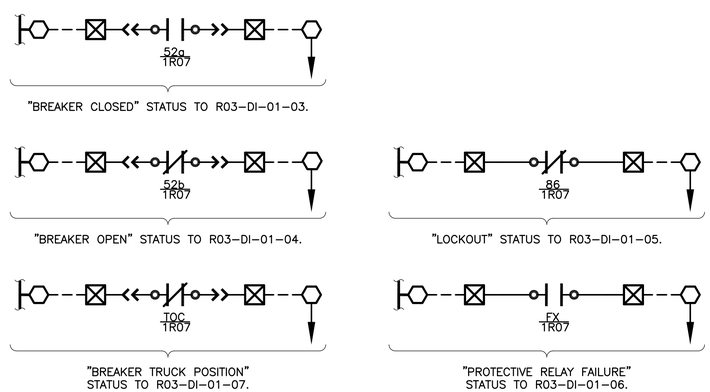

CONTROL LOGIC DEVICE LEGEND:

52a	BREAKER MOUNTED AUXILIARY CONTACT – OPEN WHEN BREAKER IS OPEN
52b	BREAKER MOUNTED AUXILIARY CONTACT – CLOSED WHEN BREAKER IS OPEN
52MOC	MECHANISM OPERATED CELL SWITCH – OPERATES AS AUXILIARY CONTACT WHEN BREAKER IS IN CONNECTED OR TEST POSITION
LS-MC	SPRING MOTOR CUTOFF SWITCH – OPEN WHEN BREAKER IS RACKED OUT
LS-SM	SPRING MOTOR LIMIT SWITCH – SHOWN WITH SPRINGS CHARGED – CHANGES STATES WHEN SPRING IS DISCHARGED
LS-LC	LATCH CHECK SWITCH – OPENS WHEN TRIP LATCH MOVES OUT OF ITS NORMAL POSITION
SM	SPRING CHARGING MOTOR
Y	ANTI-PUMP RELAY – PREVENTS ENERGIZATION OF CLOSE COIL WHEN ENERGIZED
CC	BREAKER CLOSE COIL – CLOSES BREAKER WHEN ENERGIZED
TC	BREAKER TRIP COIL – OPENS BREAKER WHEN ENERGIZED
86	PROTECTIVE RELAY TRIP LOCKOUT RELAY – MANUAL RESET
FX	PROTECTIVE RELAY FAILURE AUXILIARY RELAY – ENERGIZED WHEN PROTECTIVE RELAY STATUS IS OK
XX	PROTECTIVE RELAY XFER AUXILIARY RELAY
TOC	TRUCK OPERATED CONTACT – CONTACTS SHOWN WITH BREAKER RACKED OUT
SX	SYNC ENABLE AUXILIARY RELAY
S2L1PX	SUBSTATION MANAGEMENT RELAY PERMISSIVE OUTPUT AUXILIARY RELAY
S2L2PX	SUBSTATION MANAGEMENT RELAY PERMISSIVE OUTPUT AUXILIARY RELAY
PRMSV	BREAKER CLOSE PERMISSIVE AUXILIARY RELAY

KEY NOTES:

1. INDICATING PILOT LIGHT WITH INTEGRAL MOMENTARY ACTION "PUSH-TO-TEST" PUSH BUTTON.
2. MOUNTED ON FRONT OF PROPOSED SWITCHGEAR "SUB2-SWGR-1R" SECTION 1R07A.
3. MEDIUM VOLTAGE CIRCUIT BREAKER IS NOT INSTALLED IN THIS SECTION. SHOWN HERE FOR CLARITY.
4. DISCONNECT WIRE FROM TERMINAL BLOCKS AND REMOVE.

BAR LENGTH ON ORIGINAL DRAWING EQUALS ONE INCH, ADJUST SCALE ACCORDINGLY.

REUSE OF DOCUMENTS

This document, and the designs incorporated herein, is an instrument of professional service that has been developed, designed and prepared by Harutunian Engineering, Inc., and is not to be used, in whole or in part, for any other project without giving written notice to Harutunian Engineering, Inc.

NO.	DATE:	DESCRIPTION

HARUTUNIAN ENGINEERING INCORPORATED
TEXAS FIRM REGISTRATION NUMBER F-2408
ENGINEERING AND ENVIRONMENTAL CONSULTANTS
8100 CROSS PARK DRIVE
AUSTIN, TEXAS 78754

STATE OF TEXAS
SHANT HARUTUNIAN
87735
REGISTERED
PROFESSIONAL ENGINEER
10/7/2019

DESIGNED BY:	HEI
CHECKED BY:	HEI
APPROVED BY:	HEI
SUBMITTAL DATE:	OCTOBER 2019
SCALE:	AS SHOWN

SOUTH AUSTIN REGIONAL WASTEWATER TREATMENT PLANT
ELECTRICAL SUBSTATION NO. 1 REPLACEMENT PROJECT
CIP I.D.# 3333.032

ELECTRICAL SUBSTATION NO. 2
SUB2-SWGR-1R FEEDER BREAKER "VCB-1R07"
CONTROL LOGIC – DEMOLITION

PROJECT NO: 2014-300 | SHT. 731 OF 866 | DWG NO. SUB2-E-048

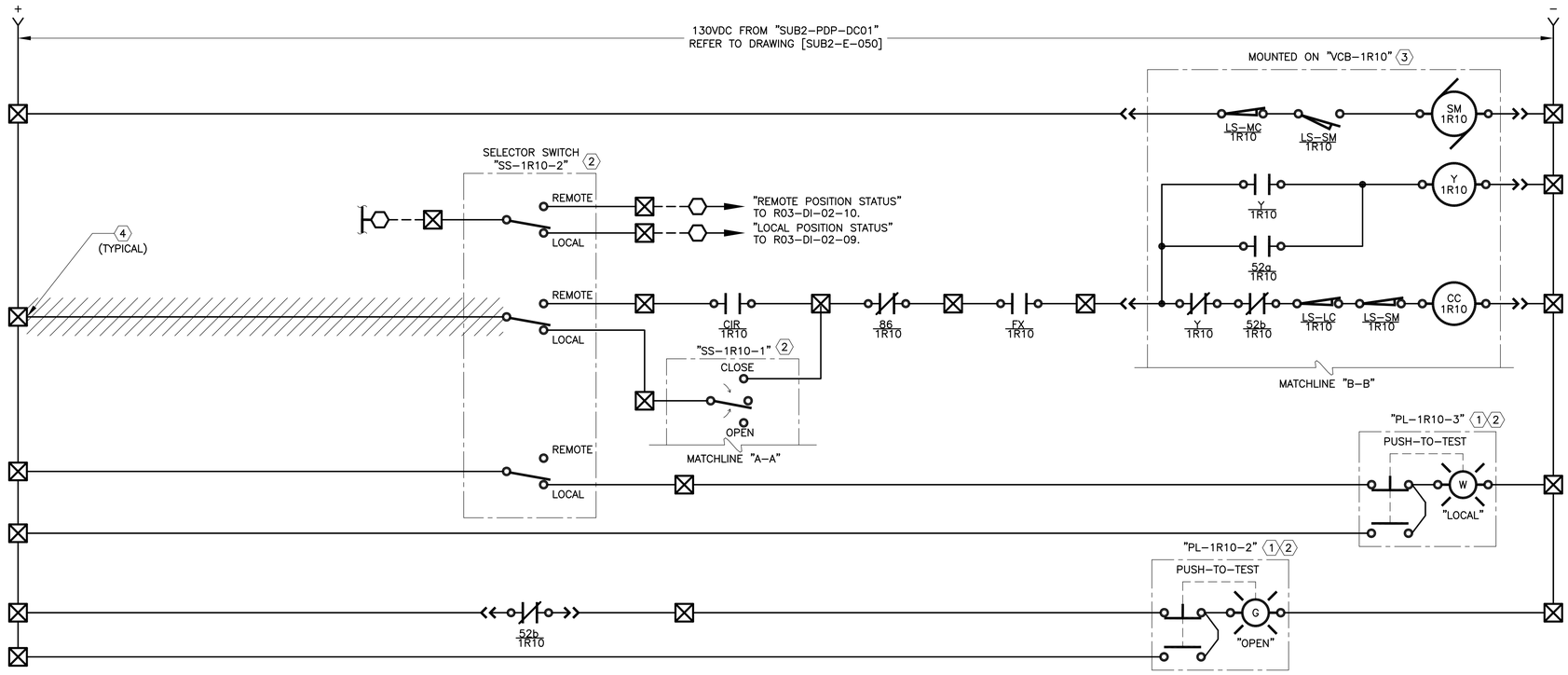

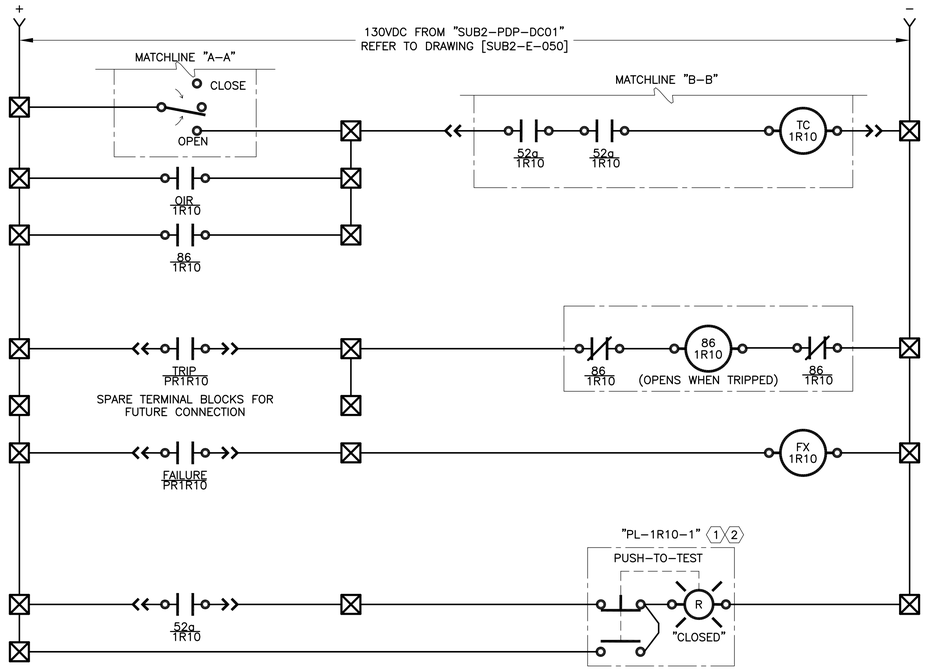

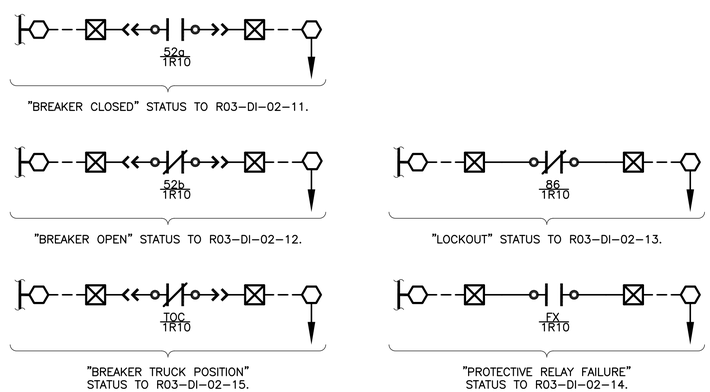

CONTROL LOGIC DEVICE LEGEND:

52a	BREAKER MOUNTED AUXILIARY CONTACT – OPEN WHEN BREAKER IS OPEN
52b	BREAKER MOUNTED AUXILIARY CONTACT – CLOSED WHEN BREAKER IS OPEN
52MOC	MECHANISM OPERATED CELL SWITCH – OPERATES AS AUXILIARY CONTACT WHEN BREAKER IS IN CONNECTED OR TEST POSITION
LS–MC	SPRING MOTOR CUTOFF SWITCH – OPEN WHEN BREAKER IS RACKED OUT
LS–SM	SPRING MOTOR LIMIT SWITCH – SHOWN WITH SPRINGS CHARGED – CHANGES STATES WHEN SPRING IS DISCHARGED
LS–LC	LATCH CHECK SWITCH – OPENS WHEN TRIP LATCH MOVES OUT OF ITS NORMAL POSITION
SM	SPRING CHARGING MOTOR
Y	ANTI–PUMP RELAY – PREVENTS ENERGIZATION OF CLOSE COIL WHEN ENERGIZED
CC	BREAKER CLOSE COIL – CLOSES BREAKER WHEN ENERGIZED
TC	BREAKER TRIP COIL – OPENS BREAKER WHEN ENERGIZED
86	PROTECTIVE RELAY TRIP LOCKOUT RELAY – MANUAL RESET
FX	PROTECTIVE RELAY FAILURE AUXILIARY RELAY – ENERGIZED WHEN PROTECTIVE RELAY STATUS IS OK
XX	PROTECTIVE RELAY XFER AUXILIARY RELAY
TOC	TRUCK OPERATED CONTACT – CONTACTS SHOWN WITH BREAKER RACKED OUT
SX	SYNC ENABLE AUXILIARY RELAY
S2L1PX	SUBSTATION MANAGEMENT RELAY PERMISSIVE OUTPUT AUXILIARY RELAY
S2L2PX	SUBSTATION MANAGEMENT RELAY PERMISSIVE OUTPUT AUXILIARY RELAY
PRMSV	BREAKER CLOSE PERMISSIVE AUXILIARY RELAY

KEY NOTES:

1. INDICATING PILOT LIGHT WITH INTEGRAL MOMENTARY ACTION "PUSH–TO–TEST" PUSH BUTTON.
2. MOUNTED ON FRONT OF PROPOSED SWITCHGEAR "SUB2–SWGR–1R" SECTION 1R10A.
3. MEDIUM VOLTAGE CIRCUIT BREAKER IS NOT INSTALLED IN THIS SECTION. SHOWN HERE FOR CLARITY.
4. DISCONNECT WIRE FROM TERMINAL BLOCKS AND REMOVE.

BAR LENGTH ON ORIGINAL DRAWING EQUALS ONE INCH, ADJUST SCALE ACCORDINGLY.

REUSE OF DOCUMENTS

This document, and the designs incorporated herein, is an instrument of professional service that has been developed, designed and prepared by Harutunian Engineering, Inc., and is not to be used, in whole or in part, for any other project without giving written notice to Harutunian Engineering, Inc.

NO.	DATE:	DESCRIPTION

HARUTUNIAN ENGINEERING INCORPORATED
TEXAS FIRM REGISTRATION NUMBER F–2408
ENGINEERING AND ENVIRONMENTAL CONSULTANTS
8100 CROSS PARK DRIVE
AUSTIN, TEXAS 78754

STATE OF TEXAS
SHANT HARUTUNIAN
87735
REGISTERED
PROFESSIONAL ENGINEER
10/7/2019

DESIGNED BY:	HEI
CHECKED BY:	HEI
APPROVED BY:	HEI
SUBMITTAL DATE:	OCTOBER 2019
SCALE:	AS SHOWN

SOUTH AUSTIN REGIONAL WASTEWATER TREATMENT PLANT
ELECTRICAL SUBSTATION NO. 1 REPLACEMENT PROJECT
CIP I.D.# 3333.032

ELECTRICAL SUBSTATION NO. 2
SUB2–SWGR–1R FEEDER BREAKER "VCB–1R10"
CONTROL LOGIC – DEMOLITION

PROJECT NO: 2014–300 | SHT. 732 OF 866 | DWG NO. SUB2–E–049

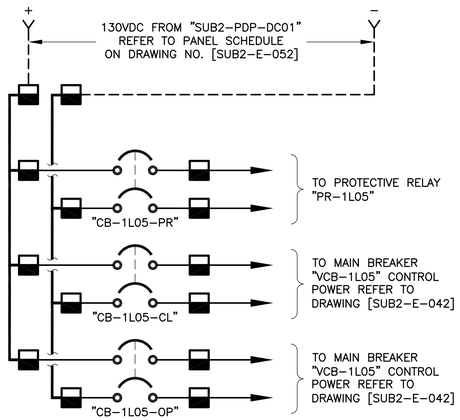

"SUB2-SWGR-1L" MAIN BREAKER
"VCB-1L05" 130VDC SUPPLY POWER

SCALE: N.T.S.

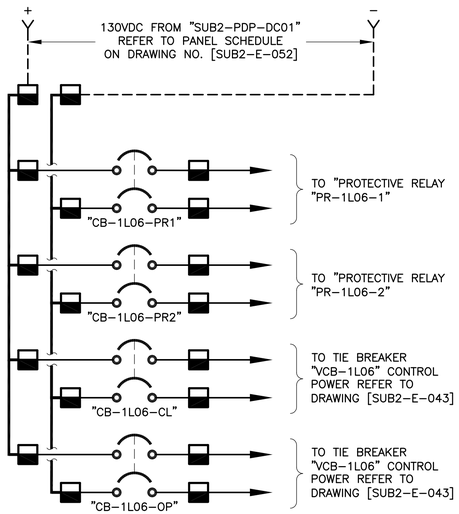

"SUB2-SWGR-1L" TIE BREAKER ⟨1⟩
"VCB-1L06" 130VDC SUPPLY POWER

SCALE: N.T.S.

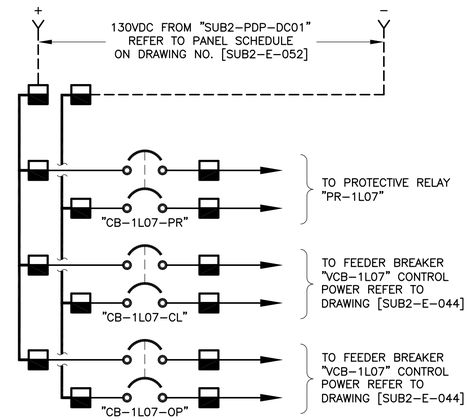

"SUB2-SWGR-1L" FEEDER BREAKER
"VCB-1L07" 130VDC SUPPLY POWER

SCALE: N.T.S.

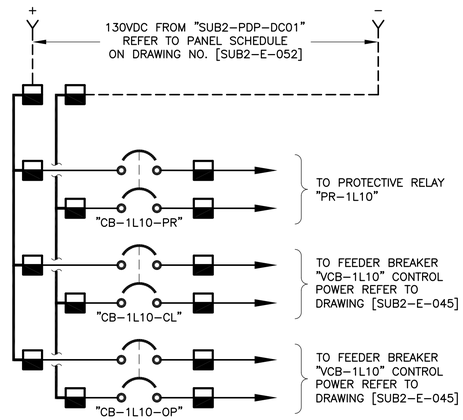

"SUB2-SWGR-1L" FEEDER BREAKER
"VCB-1L10" 130VDC SUPPLY POWER

SCALE: N.T.S.

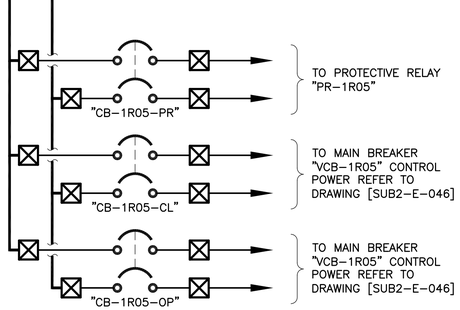

"SUB2-SWGR-1R" MAIN BREAKER
"VCB-1R05" 130VDC SUPPLY POWER

SCALE: N.T.S.

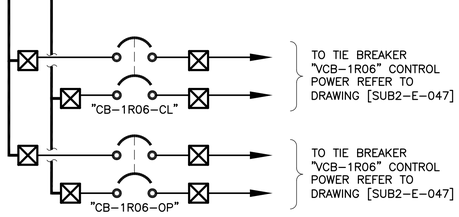

"SUB2-SWGR-1R" TIE BREAKER
"VCB-1R06" 130VDC SUPPLY POWER

SCALE: N.T.S.

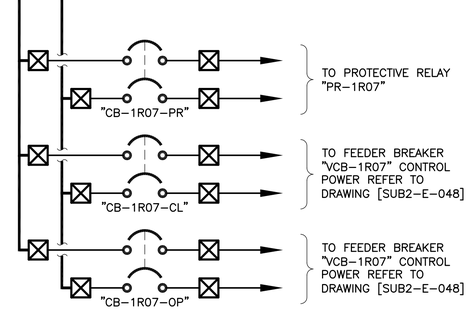

"SUB2-SWGR-1R" FEEDER BREAKER
"VCB-1R07" 130VDC SUPPLY POWER

SCALE: N.T.S.

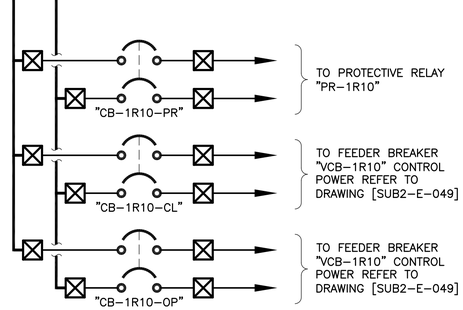

"SUB2-SWGR-1R" FEEDER BREAKER
"VCB-1R10" 130VDC SUPPLY POWER

SCALE: N.T.S.

KEY NOTES:

⟨1⟩ RECORD DRAWING WERE INCOMPLETE, FIELD VERIFY PRIOR TO PERFORMING ANY DEMOLITION/RENOVATION ACTIVITIES.

NOTE: DRAWING IS INTENDED FOR REFERENCE PURPOSES ONLY.

BAR LENGTH ON ORIGINAL DRAWING EQUALS ONE INCH, ADJUST SCALE ACCORDINGLY.

REUSE OF DOCUMENTS

This document, and the designs incorporated herein, is an instrument of professional service that has been developed, designed and prepared by Harutunian Engineering, Inc., and is not to be used, in whole or in part, for any other project without giving written notice to Harutunian Engineering, Inc.

NO.	DATE:	DESCRIPTION

HARUTUNIAN ENGINEERING INCORPORATED

TEXAS FIRM REGISTRATION NUMBER F-2408

ENGINEERING AND ENVIRONMENTAL CONSULTANTS
8100 CROSS PARK DRIVE
AUSTIN, TEXAS 78754

STATE OF TEXAS
SHANT HARUTUNIAN
87735
REGISTERED
PROFESSIONAL ENGINEER
10/7/2019

DESIGNED BY:	HEI
CHECKED BY:	HEI
APPROVED BY:	HEI
SUBMITTAL DATE:	OCTOBER 2019
SCALE:	AS SHOWN

SOUTH AUSTIN REGIONAL WASTEWATER TREATMENT PLANT
ELECTRICAL SUBSTATION NO. 1 REPLACEMENT PROJECT
CIP I.D.# 3333.032

SUBSTATION NO. 2
DC BREAKER CONTROL POWER WIRING SCHEMATICS - DEMOLITION

PROJECT NO: 2014-300 | SHT. 733 OF 866 | DWG NO. SUB2-E-050

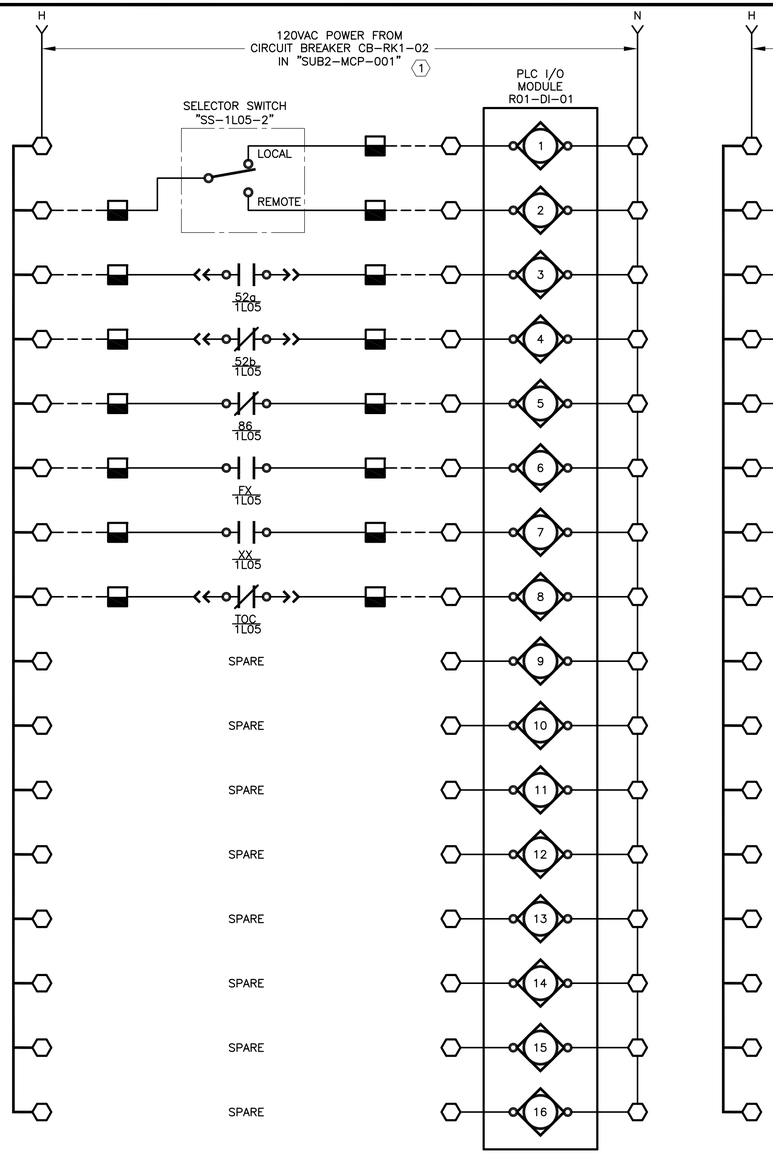

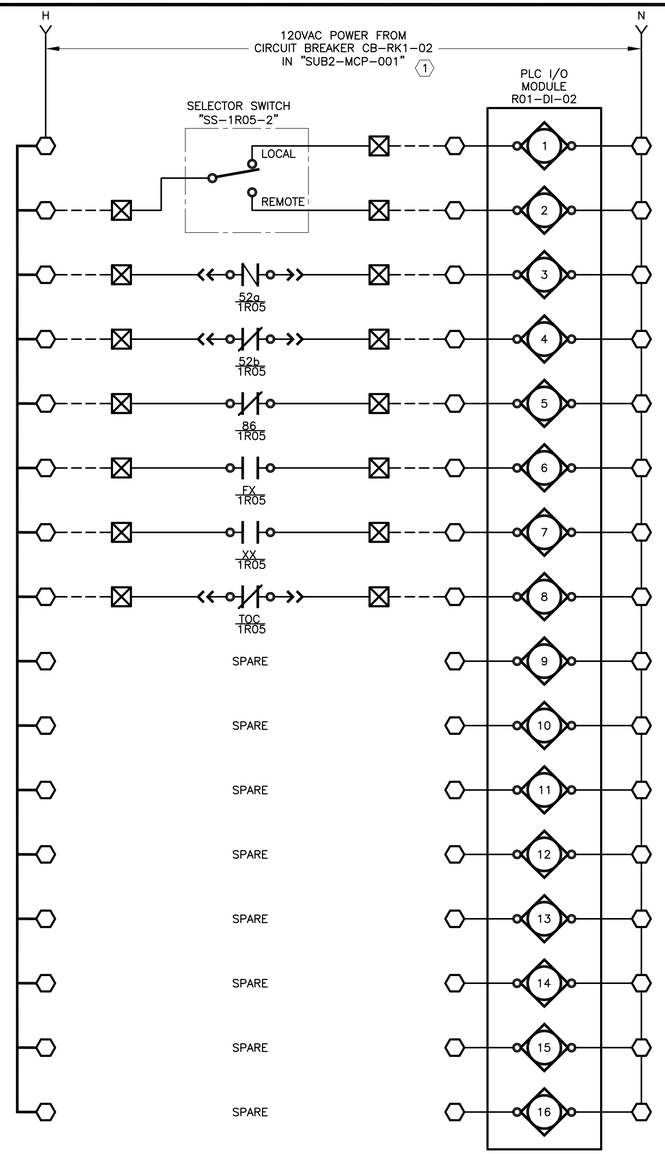

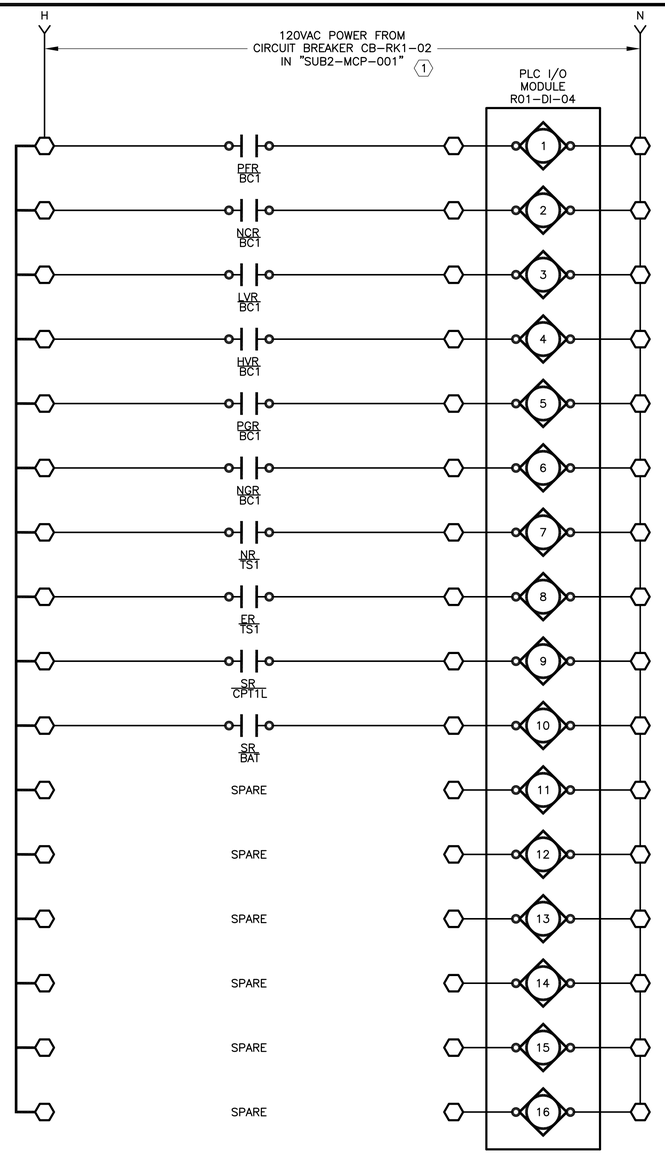

KEY NOTES:

1. RECORD DRAWING WERE INCOMPLETE, FIELD VERIFY PRIOR TO PERFORMING ANY DEMOLITION/RENOVATION ACTIVITIES.

BAR LENGTH ON ORIGINAL DRAWING EQUALS ONE INCH, ADJUST SCALE ACCORDINGLY.

REUSE OF DOCUMENTS

This document, and the designs incorporated herein, is an instrument of professional service that has been developed, designed and prepared by Harutunian Engineering, Inc., and is not to be used, in whole or in part, for any other project without giving written notice to Harutunian Engineering, Inc.

NO.	DATE:	DESCRIPTION

HARUTUNIAN ENGINEERING INCORPORATED

TEXAS FIRM REGISTRATION NUMBER F-2408

ENGINEERING AND ENVIRONMENTAL CONSULTANTS
8100 CROSS PARK DRIVE
AUSTIN, TEXAS 78754

STATE OF TEXAS
SHANT HARUTUNIAN
87735
REGISTERED
PROFESSIONAL ENGINEER
10/7/2019

DESIGNED BY:	HEI
CHECKED BY:	HEI
APPROVED BY:	HEI
SUBMITTAL DATE:	OCTOBER 2019
SCALE:	AS SHOWN

SOUTH AUSTIN REGIONAL WASTEWATER TREATMENT PLANT
ELECTRICAL SUBSTATION NO. 1 REPLACEMENT PROJECT
CIP I.D.# 3333.032

SUBSTATION NO. 2
MAIN CONTROL PANEL "SUB2-MCP-001"
PLC I/O POINTS – DEMOLITION

PROJECT NO: 2014-300 | SHT. 734 OF 866 | DWG NO. SUB2-E-051

130VDC POWER DISTRIBUTION PANEL
"SUB1-PDP-DC01"

+ −

MAIN CB
2P-800A
(SET@600A)

PDP-DC01/1,3	1-1/2" - 4#6(P), 1#8(G)	"VCB-1L04" CONTROL POWER (400VA)	CKT-1	CKT-2	"VCB-1R04" CONTROL POWER (400VA)	1-1/2" - 4#6(P), 1#8(G)	PDP-DC01/2,4
	INCLUDED IN CONDUIT WITH CIRCUIT NO. 1	"VCB-1L05" CONTROL POWER (413VA)	CKT-3	CKT-4	"VCB-1R05" CONTROL POWER (413VA)	INCLUDED IN CONDUIT WITH CIRCUIT NO. 2	
PDP-DC01/5,7	1-1/2" - 4#6(P), 1#8(G)	"VCB-1L06" CONTROL POWER (413VA)	CKT-5	CKT-6	"VCB-1R06" CONTROL POWER (413VA)	1-1/2" - 4#6(P), 1#8(G)	PDP-DC01/6,8
	INCLUDED IN CONDUIT WITH CIRCUIT NO. 5	"VCB-1L07" CONTROL POWER (400VA)	CKT-7	CKT-8	"VCB-1R07" CONTROL POWER (400VA)	INCLUDED IN CONDUIT WITH CIRCUIT NO. 6	
PDP-DC01/9,11,13	1-1/2" - 6#6(P), 1#8(G)	"VCB-1L08" CONTROL POWER (400VA)	CKT-9	CKT-10	"VCB-1R08" CONTROL POWER (400VA)	1-1/2" - 6#6(P), 1#8(G)	PDP-DC01/10,12,14
	INCLUDED IN CONDUIT WITH CIRCUIT NO. 9	"VCB-1L09" CONTROL POWER (400VA)	CKT-11	CKT-12	"VCB-1R09" CONTROL POWER (400VA)	INCLUDED IN CONDUIT WITH CIRCUIT NO. 10	
	INCLUDED IN CONDUIT WITH CIRCUIT NO. 9	"VCB-1L10" CONTROL POWER (400VA)	CKT-13	CKT-14	"VCB-1R10" CONTROL POWER (400VA)	INCLUDED IN CONDUIT WITH CIRCUIT NO. 10	
PDP-DC01/15,17,19	1-1/2" - 6#6(P), 1#8(G)	"VCB-1L11" CONTROL POWER (400VA)	CKT-15	CKT-16	"VCB-1R11" CONTROL POWER (400VA)	1-1/2" - 6#6(P), 1#8(G)	PDP-DC01/16,18,20
	INCLUDED IN CONDUIT WITH CIRCUIT NO. 15	"VCB-1L12" CONTROL POWER (400VA)	CKT-17	CKT-18	"VCB-1R12" CONTROL POWER (400VA)	INCLUDED IN CONDUIT WITH CIRCUIT NO. 16	
	INCLUDED IN CONDUIT WITH CIRCUIT NO. 15	"VCB-1L13" CONTROL POWER (400VA)	CKT-19	CKT-20	"VCB-1R13" CONTROL POWER (400VA)	INCLUDED IN CONDUIT WITH CIRCUIT NO. 16	
PDP-DC01/21,23,25	1-1/2" - 6#6(P), 1#8(G)	"VCB-1L14" CONTROL POWER (400VA)	CKT-21	CKT-22	"VCB-1R14" CONTROL POWER (400VA)	1-1/2" - 6#6(P), 1#8(G)	PDP-DC01/22,24,26
	INCLUDED IN CONDUIT WITH CIRCUIT NO. 21	"VCB-1L15" CONTROL POWER (400VA)	CKT-23	CKT-24	"VCB-1R15" CONTROL POWER (400VA)	INCLUDED IN CONDUIT WITH CIRCUIT NO. 22	

All breakers: 2P-20A

MATCHLINE "A-A" REFER TO DRAWING NO. [SUB2-E-053]

BAR LENGTH ON ORIGINAL DRAWING EQUALS ONE INCH, ADJUST SCALE ACCORDINGLY.

REUSE OF DOCUMENTS

This document, and the designs incorporated herein, is an instrument of professional service that has been developed, designed and prepared by Harutunian Engineering, Inc., and is not to be used, in whole or in part, for any other project without giving written notice to Harutunian Engineering, Inc.

NO.	DATE:	DESCRIPTION

HARUTUNIAN ENGINEERING INCORPORATED
TEXAS FIRM REGISTRATION NUMBER F-2408
ENGINEERING AND ENVIRONMENTAL CONSULTANTS
8100 CROSS PARK DRIVE
AUSTIN, TEXAS 78754

STATE OF TEXAS
SHANT HARUTUNIAN
87735
REGISTERED
PROFESSIONAL ENGINEER
10/7/2019

DESIGNED BY:	HEI
CHECKED BY:	HEI
APPROVED BY:	HEI
SUBMITTAL DATE:	OCTOBER 2019
SCALE:	AS SHOWN

SOUTH AUSTIN REGIONAL WASTEWATER TREATMENT PLANT
ELECTRICAL SUBSTATION NO. 1 REPLACEMENT PROJECT
CIP I.D.# 3333.032

SUBSTATION NO. 2 PANEL SCHEDULE DEMOLITION (SHEET 1 OF 3)

PROJECT NO: 2014-300 | SHT. 735 OF 866 | DWG NO. SUB2-E-052

MATCHLINE "A–A" REFER TO DRAWING NO. [SUB2–E–052]

	INCLUDED IN CONDUIT WITH CIRCUIT NO. 21	"VCB–1L16" CONTROL POWER (400VA)	CKT–25 2P–20A	CKT–26 2P–20A	"VCB–1R16" CONTROL POWER (400VA)	INCLUDED IN CONDUIT WITH CIRCUIT NO. 22	
PDP–DC01/27	1–1/2" – 2#2(P), 1#8(G)	"SUB2–INV–001" INVERTER DC POWER (5000VA)	CKT–27 2P–20A	CKT–28 2P–20A	BREAKER TEST AREA RECEPTACLE (5000VA)	1" – 2#6(P), 1#8(G)	PDP–DC01/28
PDP–DC01/29	1" – 2#6(P), 1#8(G)	"SUB2–BM–001" BATTERY MONITOR CONTROL POWER (180VA)	CKT–29 2P–20A	CKT–30 2P–20A	"SUB2–CP–001" BREAKER TEST CONTROL PANEL (180VA)	1" – 2#6(P), 1#8(G)	PDP–DC01/30
		SPARE	CKT–31 2P–20A	CKT–32 2P–20A	SPARE		
		SPARE	CKT–33 2P–20A	CKT–34 2P–20A	SPARE		
		SPARE	CKT–35 2P–20A	CKT–36 2P–20A	SPARE		

BAR LENGTH ON ORIGINAL DRAWING EQUALS ONE INCH, ADJUST SCALE ACCORDINGLY.

REUSE OF DOCUMENTS

This document, and the designs incorporated herein, is an instrument of professional service that has been developed, designed and prepared by Harutunian Engineering, Inc., and is not to be used, in whole or in part, for any other project without giving written notice to Harutunian Engineering, Inc.

NO.	DATE:	DESCRIPTION

HARUTUNIAN ENGINEERING INCORPORATED
TEXAS FIRM REGISTRATION NUMBER F–2408
ENGINEERING AND ENVIRONMENTAL CONSULTANTS
8100 CROSS PARK DRIVE
AUSTIN, TEXAS 78754

STATE OF TEXAS
SHANT HARUTUNIAN
87735
REGISTERED
PROFESSIONAL ENGINEER
10/7/2019

DESIGNED BY:	HEI
CHECKED BY:	HEI
APPROVED BY:	HEI
SUBMITTAL DATE:	OCTOBER 2019
SCALE:	AS SHOWN

SOUTH AUSTIN REGIONAL WASTEWATER TREATMENT PLANT
ELECTRICAL SUBSTATION NO. 1 REPLACEMENT PROJECT
CIP I.D.# 3333.032

SUBSTATION NO. 2 PANEL SCHEDULE DEMOLITION (SHEET 2 OF 3)

PROJECT NO: 2014–300 | SHT. 736 OF 866 | DWG NO. SUB2–E–053

PANELBOARD "SUB2-LP-001"
120/208V, 225A BUS, 3ø, 4W

A B C N

MAIN CB 3P-150A

	SPARE	CKT-1 1P-20A	CKT-2 1P-20A	FLUORESCENT LIGHTING (1500VA)	1" - 3#10(P), 1#10(G)		LP1-2,4
LP1-1,3,29	1" - 5#10(P), 1#10(G)	FLUORESCENT LIGHTING (1100VA)	CKT-3 1P-20A	CKT-4 1P-20A	FLUORESCENT LIGHTING (1600VA)	INCLUDED IN CONDUIT WITH CIRCUIT NO. 2	
	INCLUDED IN CONDUIT WITH CIRCUIT NO. 3	FLUORESCENT LIGHTING (1100VA)	CKT-5 1P-20A	CKT-6 1P-20A	LIGHTING CONTACTOR "SUB2-LC-001" (50VA)	1" - 2#10(P), 1#10(G)	LP1-6
LP1-7,8,17	1" -6#10(P), 1#10(G)	CONTROL PANEL LIGHTING (700VA)	CKT-7 1P-20A	CKT-8 1P-20A	CONTROL PANEL RECEPTACLES (450VA)	INCLUDED IN CONDUIT WITH CIRCUIT NO. 7	
LP1-9,11	1" - 3#10(P), 1#10(G)	RECEPTACLES (720VA)	CKT-9 2P-20A	CKT-10 1P-20A	RECEPTACLES (900VA)	1" - 3#10(P), 1#10(G)	LP1-10,12
	INCLUDED IN CONDUIT WITH CIRCUIT NO. 9	RECEPTACLES (720VA)	CKT-11 1P-20A	CKT-12 1P-20A	RECEPTACLES (1080VA)	INCLUDED IN CONDUIT WITH CIRCUIT NO. 10	
	SPARE		CKT-13 1P-20A	CKT-14 1P-20A	VOICE COMM. CABINET "SUB2-CP-VCOM1" (800VA)	INCLUDED IN CONDUIT WITH CIRCUIT NO. 15	
LP1-15	1" - 4#10(P), 1#10(G)	BATTERY CHARGER "SUB2-BC-001" COOLING FAN (55VA)	CKT-15 1P-20A	CKT-16 1P-20A	BATTERY CHARGER "SUB2-BC-002" COOLING FANS (55VA)	1" - 4#10(P), 1#10(G)	LP1-16,18
LP1-17	INCLUDED IN CONDUIT WITH CIRCUIT NO. 7	CONTROL PANEL COOLING FANS (55VA)	CKT-17 1P-20A	CKT-18 1P-20A	DC DISTRIBUTION BUS "SUB2-TB-001" COOLING FANS (55VA)	INCLUDED IN CONDUIT WITH CIRCUIT NO. 16	
LP1-19,21	1" - 4#10(P), 1#10(G)	"SUB2-SWGR-1R" SPACE HEATERS SECTIONS 1R13-1R17 (1000VA)	CKT-19 1P-20A	CKT-20 1P-20A	"SUB2-SWGR-1L" SPACE HEATERS SECTIONS 1L13-1L17 (1000VA)	1" - 4#10(P), 1#10(G)	LP1-20,22
	INCLUDED IN CONDUIT WITH CIRCUIT NO. 19	"SUB2-SWGR-1R" SPACE HEATERS SECTIONS 1R07-1R12 (1000VA)	CKT-21 1P-20A	CKT-22 1P-20A	"SUB2-SWGR-1L" SPACE HEATERS SECTIONS 1L07-1L12 (1000VA)	INCLUDED IN CONDUIT WITH CIRCUIT NO. 22	
	FUTURE	SPARE	CKT-23	CKT-24	OUTDOOR LIGHTING (2400VA)	1" - 2#10(P), 1#10(G)	LP1-24,26
			CKT-25	CKT-26 2P-20A			
			CKT-27 3P-20A	CKT-28 1P-20A	"SUB2-SWGR-1L" SPACE HEATERS (0VA)	1L01-1L08	LP1-28
	INCLUDED IN CONDUIT WITH CIRCUIT NO. 3	FLUORESCENT LIGHTING (1600VA)	CKT-29 2P-20A	CKT-30 1P-20A	BUS DUCT SPACE HEATER (1000VA)	1" - 2#10(P), 1#10(G)	LP1-30
	FUTURE	SPARE	CKT-31 1P-20A	CKT-32 1P-20A	SPARE		
	FUTURE	SPARE	CKT-33 1P-20A	CKT-34 1P-20A	SPARE		
	FUTURE	SPARE	CKT-35 1P-20A	CKT-36 1P-20A	"SUB2-SWGR-1R" SPACE HEATER (0VA)	1R01-1R08	LP1-36
	FUTURE	SPARE	CKT-37 1P-20A	CKT-38 1P-20A	SPARE		
	FUTURE	SPARE	CKT-39 1P-20A	CKT-40 1P-20A	SPARE		
	FUTURE	SPARE	CKT-41 1P-20A	CKT-42 1P-20A	SPARE		

BAR LENGTH ON ORIGINAL DRAWING EQUALS ONE INCH, ADJUST SCALE ACCORDINGLY.

REUSE OF DOCUMENTS

This document, and the designs incorporated herein, is an instrument of professional service that has been developed, designed and prepared by Harutunian Engineering, Inc., and is not to be used, in whole or in part, for any other project without giving written notice to Harutunian Engineering, Inc.

NO.	DATE:	DESCRIPTION

HARUTUNIAN ENGINEERING INCORPORATED
TEXAS FIRM REGISTRATION NUMBER F-2408
ENGINEERING AND ENVIRONMENTAL CONSULTANTS
8100 CROSS PARK DRIVE
AUSTIN, TEXAS 78754

STATE OF TEXAS
SHANT HARUTUNIAN
87735
REGISTERED
PROFESSIONAL ENGINEER
10/7/2019

DESIGNED BY:	HEI
CHECKED BY:	HEI
APPROVED BY:	HEI
SUBMITTAL DATE:	OCTOBER 2019
SCALE:	AS SHOWN

SOUTH AUSTIN REGIONAL WASTEWATER TREATMENT PLANT
ELECTRICAL SUBSTATION NO. 1 REPLACEMENT PROJECT
CIP I.D.# 3333.032

SUBSTATION NO. 2 PANEL SCHEDULE DEMOLITION (SHEET 3 OF 3)

PROJECT NO: 2014-300 | SHT. 737 OF 866 | DWG NO. SUB2-E-054

12470V SWITCHGEAR "SUB2-SWGR-1L" (1)

15kV, 3ø, 3W, 2000A TIN PLATED COPPER BUS, RATED 1000MVA

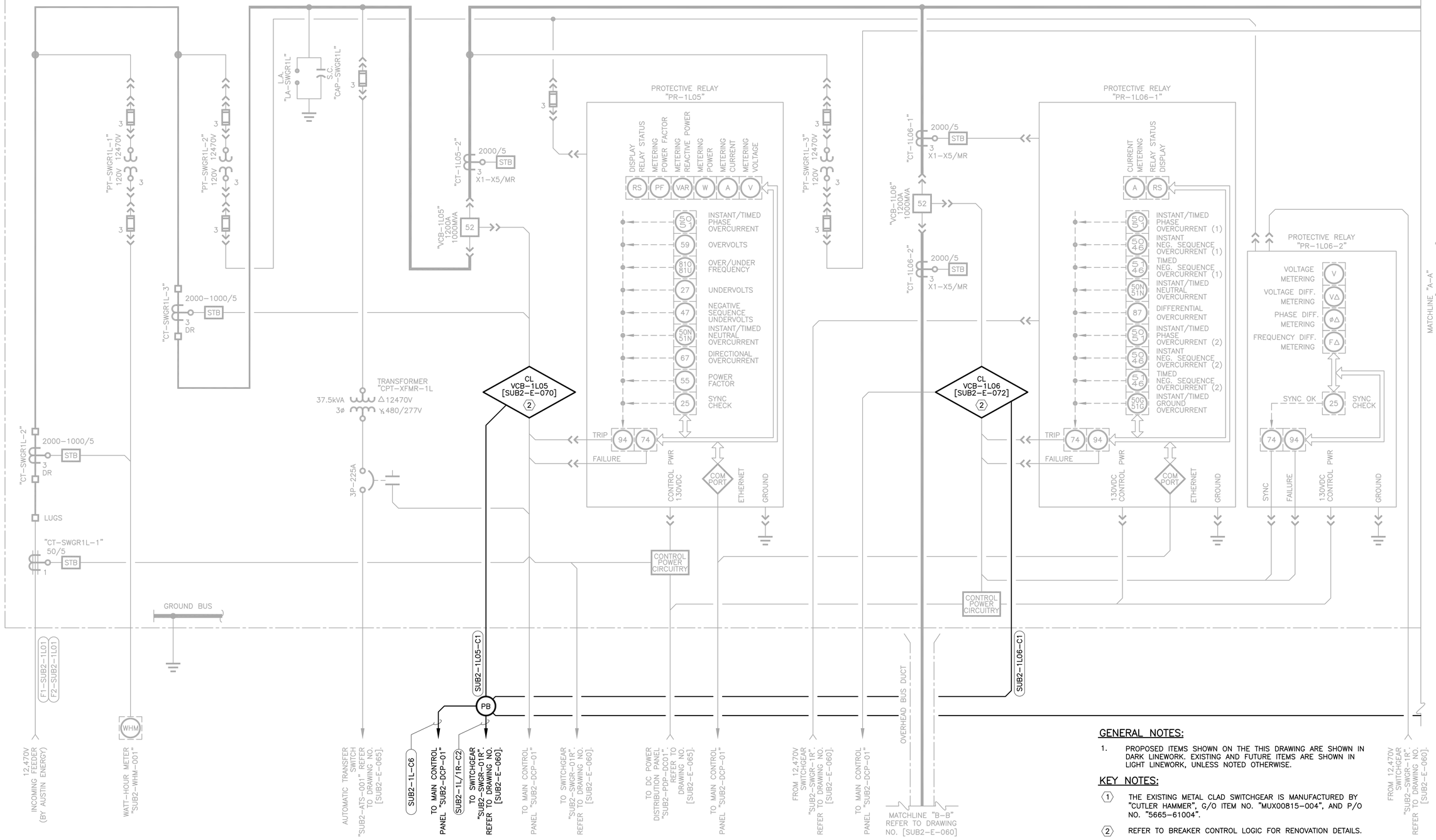

GENERAL NOTES:

1. PROPOSED ITEMS SHOWN ON THE THIS DRAWING ARE SHOWN IN DARK LINEWORK. EXISTING AND FUTURE ITEMS ARE SHOWN IN LIGHT LINEWORK, UNLESS NOTED OTHERWISE.

KEY NOTES:

(1) THE EXISTING METAL CLAD SWITCHGEAR IS MANUFACTURED BY "CUTLER HAMMER", G/O ITEM NO. "MUX00815-004", AND P/O NO. "5665-61004".

(2) REFER TO BREAKER CONTROL LOGIC FOR RENOVATION DETAILS.

BAR LENGTH ON ORIGINAL DRAWING EQUALS ONE INCH, ADJUST SCALE ACCORDINGLY.

REUSE OF DOCUMENTS

This document, and the designs incorporated herein, is an instrument of professional service that has been developed, designed and prepared by Harutunian Engineering, Inc., and is not to be used, in whole or in part, for any other project without giving written notice to Harutunian Engineering, Inc.

NO.	DATE:	DESCRIPTION

HARUTUNIAN ENGINEERING INCORPORATED

TEXAS FIRM REGISTRATION NUMBER F-2408

ENGINEERING AND ENVIRONMENTAL CONSULTANTS
8100 CROSS PARK DRIVE
AUSTIN, TEXAS 78754

STATE OF TEXAS — SHANT HARUTUNIAN 87735 — REGISTERED PROFESSIONAL ENGINEER — 10/7/2019

DESIGNED BY:	HEI
CHECKED BY:	HEI
APPROVED BY:	HEI
SUBMITTAL DATE:	OCTOBER 2019
SCALE:	AS SHOWN

SOUTH AUSTIN REGIONAL WASTEWATER TREATMENT PLANT
ELECTRICAL SUBSTATION NO. 1 REPLACEMENT PROJECT
CIP I.D.# 3333.032

ELECTRICAL SUBSTATION NO. 2
DETAILED ONE-LINE DIAGRAM
RENOVATION (SHEET 1 OF 11)

PROJECT NO: 2014-300 | SHT. 738 OF 866 | DWG NO. SUB2-E-055

12470V SWITCHGEAR "SUB2-SWGR-1L" (1)

15kV, 3ø, 3W, 2000A TIN PLATED COPPER BUS, RATED 1000MVA

MATCHLINE "A-A"
ON DRAWING NO. [SUB2-E-055].

MATCHLINE "B-B"
ON DRAWING NO. [SUB2-E-057].

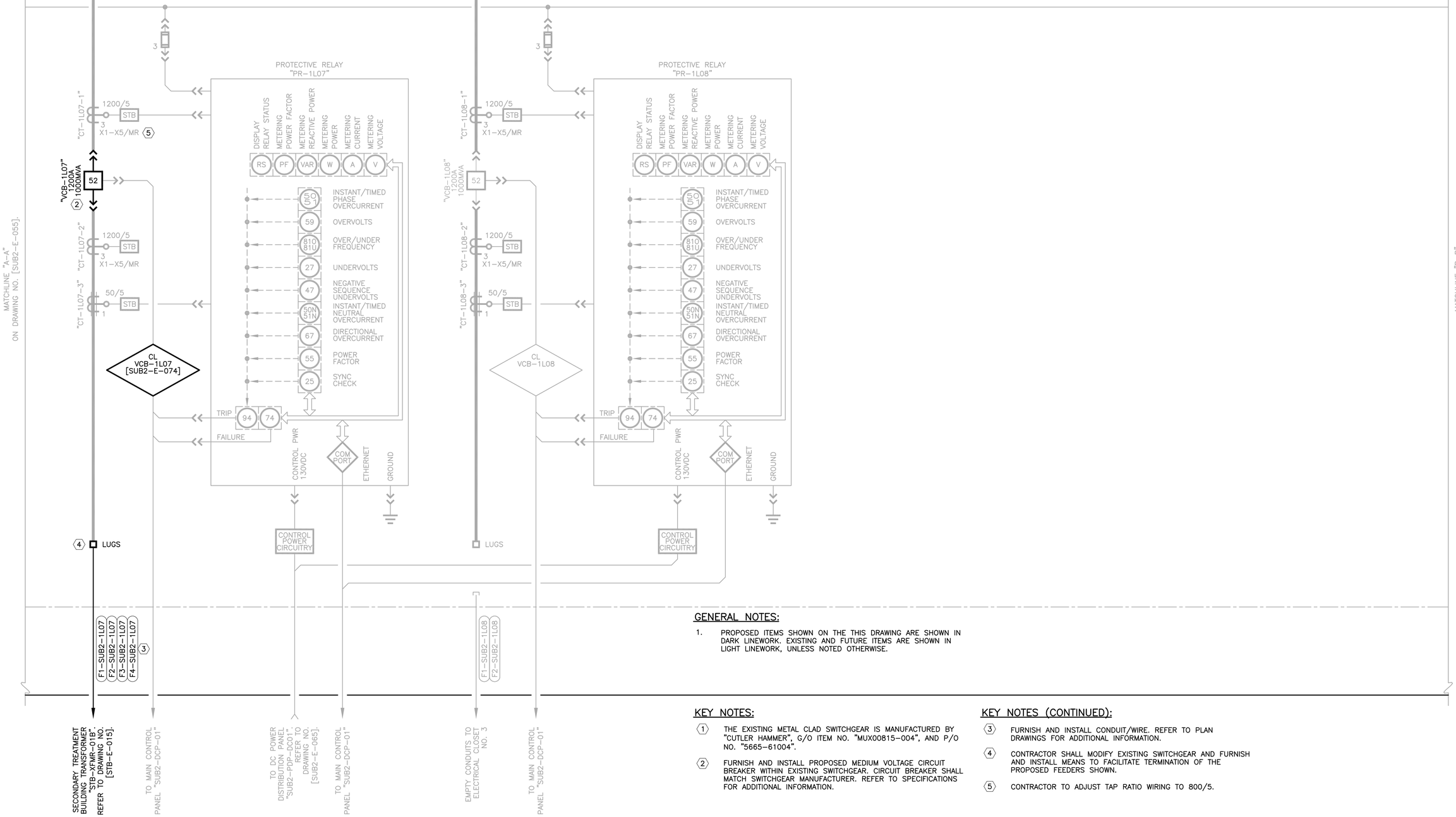

GENERAL NOTES:

1. PROPOSED ITEMS SHOWN ON THE THIS DRAWING ARE SHOWN IN DARK LINEWORK. EXISTING AND FUTURE ITEMS ARE SHOWN IN LIGHT LINEWORK, UNLESS NOTED OTHERWISE.

KEY NOTES:

(1) THE EXISTING METAL CLAD SWITCHGEAR IS MANUFACTURED BY "CUTLER HAMMER", G/O ITEM NO. "MUX00815-004", AND P/O NO. "5665-61004".

(2) FURNISH AND INSTALL PROPOSED MEDIUM VOLTAGE CIRCUIT BREAKER WITHIN EXISTING SWITCHGEAR. CIRCUIT BREAKER SHALL MATCH SWITCHGEAR MANUFACTURER. REFER TO SPECIFICATIONS FOR ADDITIONAL INFORMATION.

KEY NOTES (CONTINUED):

(3) FURNISH AND INSTALL CONDUIT/WIRE. REFER TO PLAN DRAWINGS FOR ADDITIONAL INFORMATION.

(4) CONTRACTOR SHALL MODIFY EXISTING SWITCHGEAR AND FURNISH AND INSTALL MEANS TO FACILITATE TERMINATION OF THE PROPOSED FEEDERS SHOWN.

(5) CONTRACTOR TO ADJUST TAP RATIO WIRING TO 800/5.

BAR LENGTH ON ORIGINAL DRAWING EQUALS ONE INCH, ADJUST SCALE ACCORDINGLY.

REUSE OF DOCUMENTS

This document, and the designs incorporated herein, is an instrument of professional service that has been developed, designed and prepared by Harutunian Engineering, Inc., and is not to be used, in whole or in part, for any other project without giving written notice to Harutunian Engineering, Inc.

NO.	DATE:	DESCRIPTION

HARUTUNIAN ENGINEERING INCORPORATED
TEXAS FIRM REGISTRATION NUMBER F-2408
ENGINEERING AND ENVIRONMENTAL CONSULTANTS
8100 CROSS PARK DRIVE
AUSTIN, TEXAS 78754

STATE OF TEXAS
SHANT HARUTUNIAN
87735
REGISTERED
PROFESSIONAL ENGINEER
10/7/2019

DESIGNED BY:	HEI
CHECKED BY:	HEI
APPROVED BY:	HEI
SUBMITTAL DATE:	OCTOBER 2019
SCALE:	AS SHOWN

SOUTH AUSTIN REGIONAL WASTEWATER TREATMENT PLANT
ELECTRICAL SUBSTATION NO. 1 REPLACEMENT PROJECT
CIP I.D.# 3333.032

ELECTRICAL SUBSTATION NO. 2 DETAILED ONE-LINE DIAGRAM RENOVATION (SHEET 2 OF 11)

PROJECT NO: 2014-300 | SHT. 739 OF 866 | DWG NO. SUB2-E-056

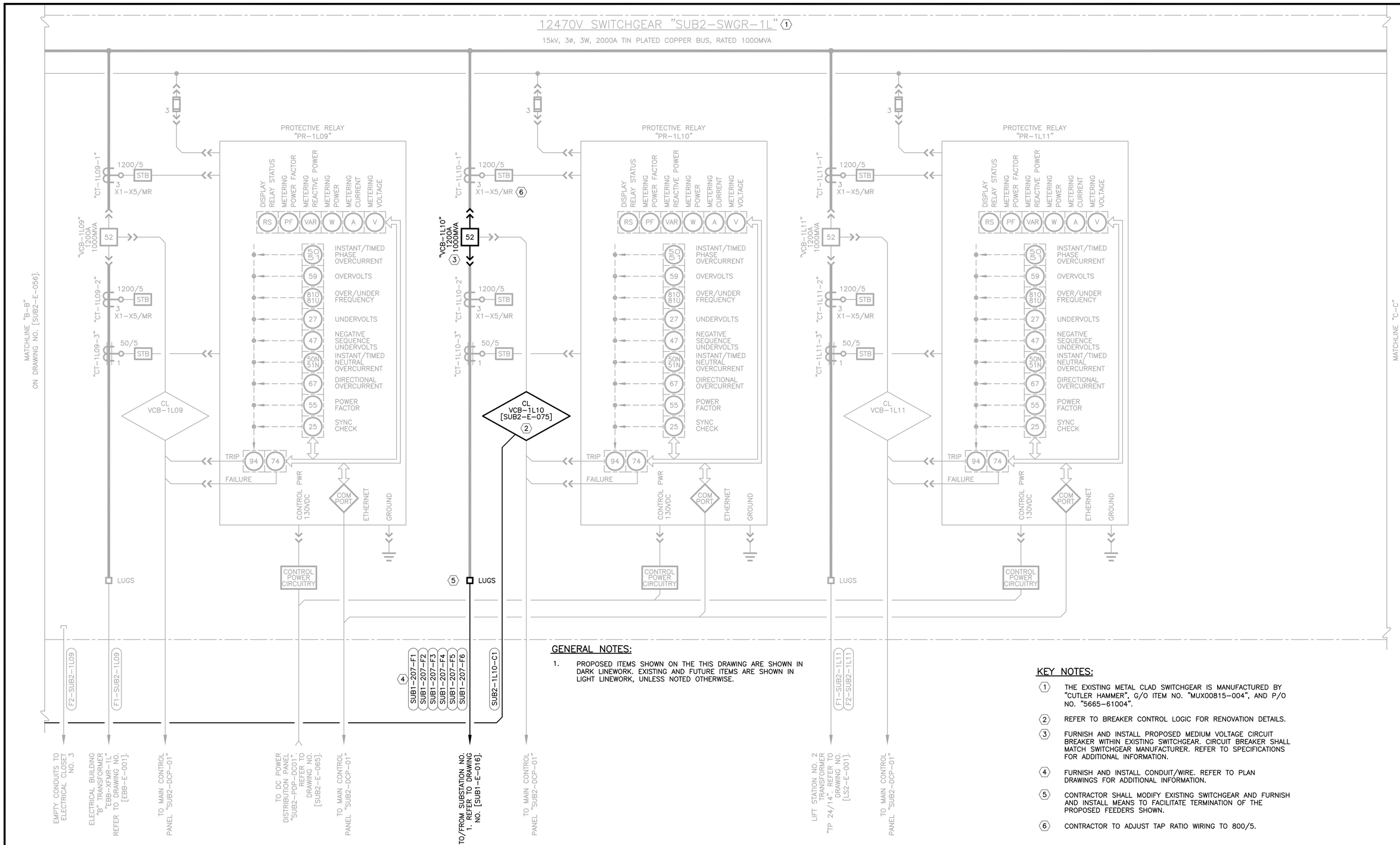

GENERAL NOTES:

1. PROPOSED ITEMS SHOWN ON THE THIS DRAWING ARE SHOWN IN DARK LINEWORK. EXISTING AND FUTURE ITEMS ARE SHOWN IN LIGHT LINEWORK, UNLESS NOTED OTHERWISE.

KEY NOTES:

1. THE EXISTING METAL CLAD SWITCHGEAR IS MANUFACTURED BY "CUTLER HAMMER", G/O ITEM NO. "MUX00815-004", AND P/O NO. "5665-61004".
2. REFER TO BREAKER CONTROL LOGIC FOR RENOVATION DETAILS.
3. FURNISH AND INSTALL PROPOSED MEDIUM VOLTAGE CIRCUIT BREAKER WITHIN EXISTING SWITCHGEAR. CIRCUIT BREAKER SHALL MATCH SWITCHGEAR MANUFACTURER. REFER TO SPECIFICATIONS FOR ADDITIONAL INFORMATION.
4. FURNISH AND INSTALL CONDUIT/WIRE. REFER TO PLAN DRAWINGS FOR ADDITIONAL INFORMATION.
5. CONTRACTOR SHALL MODIFY EXISTING SWITCHGEAR AND FURNISH AND INSTALL MEANS TO FACILITATE TERMINATION OF THE PROPOSED FEEDERS SHOWN.
6. CONTRACTOR TO ADJUST TAP RATIO WIRING TO 800/5.

BAR LENGTH ON ORIGINAL DRAWING EQUALS ONE INCH, ADJUST SCALE ACCORDINGLY.

REUSE OF DOCUMENTS

This document, and the designs incorporated herein, is an instrument of professional service that has been developed, designed and prepared by Harutunian Engineering, Inc., and is not to be used, in whole or in part, for any other project without giving written notice to Harutunian Engineering, Inc.

NO.	DATE:	DESCRIPTION

HARUTUNIAN ENGINEERING INCORPORATED
TEXAS FIRM REGISTRATION NUMBER F-2408
ENGINEERING AND ENVIRONMENTAL CONSULTANTS
8100 CROSS PARK DRIVE
AUSTIN, TEXAS 78754

STATE OF TEXAS
SHANT HARUTUNIAN
87735
REGISTERED
PROFESSIONAL ENGINEER
10/7/2019

DESIGNED BY:	HEI
CHECKED BY:	HEI
APPROVED BY:	HEI
SUBMITTAL DATE:	OCTOBER 2019
SCALE:	AS SHOWN

SOUTH AUSTIN REGIONAL WASTEWATER TREATMENT PLANT
ELECTRICAL SUBSTATION NO. 1 REPLACEMENT PROJECT
CIP I.D.# 3333.032

ELECTRICAL SUBSTATION NO. 2 DETAILED ONE-LINE DIAGRAM RENOVATION (SHEET 3 OF 11)

PROJECT NO: 2014-300 | SHT. 740 OF 866 | DWG NO. SUB2-E-057

12470V SWITCHGEAR "SUB2-SWGR-1L" (1)

15kV, 3ø, 3W, 2000A TIN PLATED COPPER BUS, RATED 1000MVA

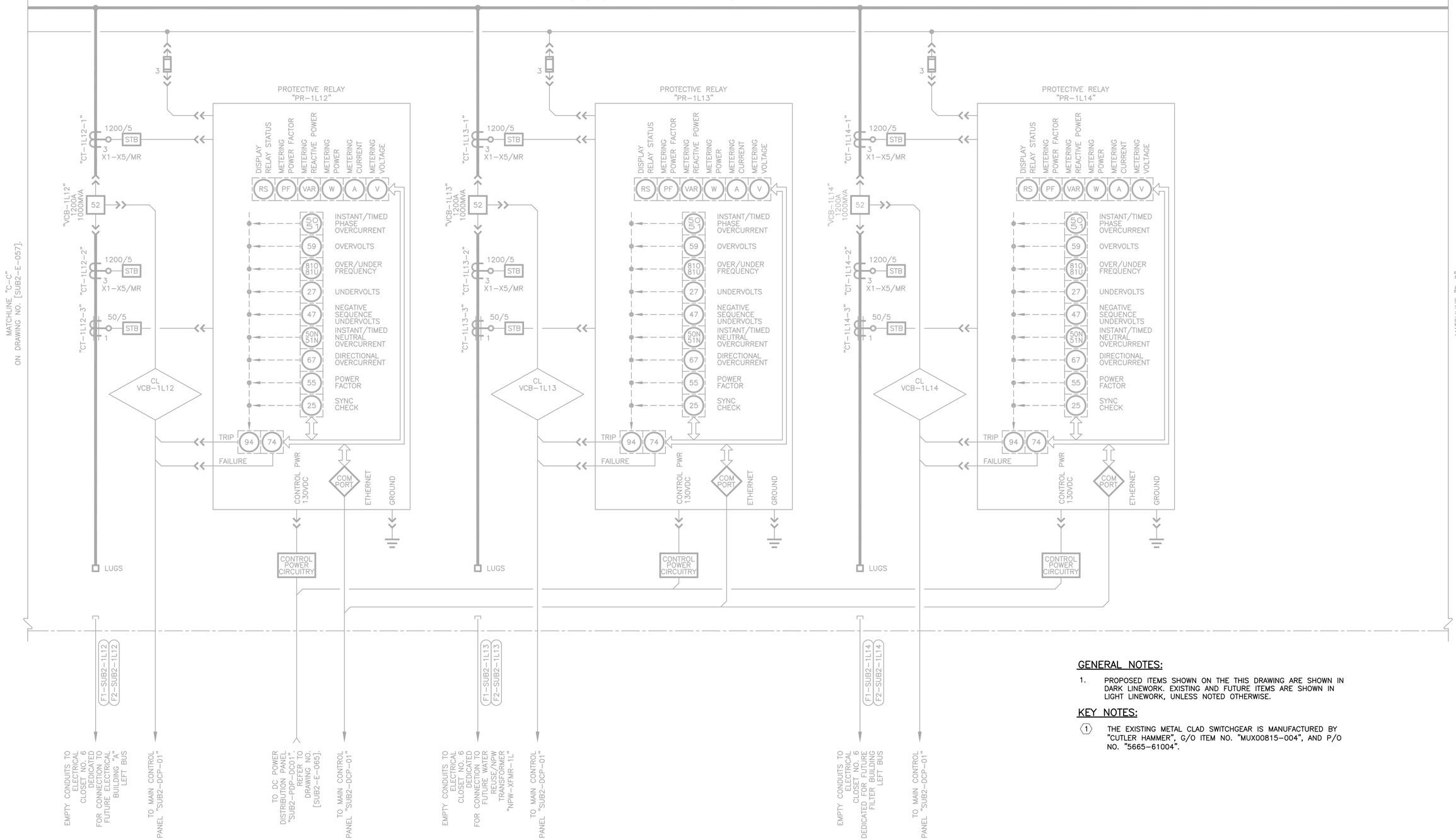

GENERAL NOTES:

1. PROPOSED ITEMS SHOWN ON THE THIS DRAWING ARE SHOWN IN DARK LINEWORK. EXISTING AND FUTURE ITEMS ARE SHOWN IN LIGHT LINEWORK, UNLESS NOTED OTHERWISE.

KEY NOTES:

(1) THE EXISTING METAL CLAD SWITCHGEAR IS MANUFACTURED BY "CUTLER HAMMER", G/O ITEM NO. "MUX00815-004", AND P/O NO. "5665-61004".

BAR LENGTH ON ORIGINAL DRAWING EQUALS ONE INCH, ADJUST SCALE ACCORDINGLY.

REUSE OF DOCUMENTS

This document, and the designs incorporated herein, is an instrument of professional service that has been developed, designed and prepared by Harutunian Engineering, Inc., and is not to be used, in whole or in part, for any other project without giving written notice to Harutunian Engineering, Inc.

NO.	DATE:	DESCRIPTION

HARUTUNIAN ENGINEERING INCORPORATED

TEXAS FIRM REGISTRATION NUMBER F-2408

ENGINEERING AND ENVIRONMENTAL CONSULTANTS
8100 CROSS PARK DRIVE
AUSTIN, TEXAS 78754

STATE OF TEXAS · SHANT HARUTUNIAN 87735 · REGISTERED PROFESSIONAL ENGINEER · 10/7/2019

DESIGNED BY:	HEI
CHECKED BY:	HEI
APPROVED BY:	HEI
SUBMITTAL DATE:	OCTOBER 2019
SCALE:	AS SHOWN

SOUTH AUSTIN REGIONAL WASTEWATER TREATMENT PLANT
ELECTRICAL SUBSTATION NO. 1 REPLACEMENT PROJECT
CIP I.D.# 3333.032

ELECTRICAL SUBSTATION NO. 2
DETAILED ONE-LINE DIAGRAM
RENOVATION (SHEET 4 OF 11)

PROJECT NO: 2014-300 | SHT. 741 OF 866 | DWG NO. SUB2-E-058

12470V SWITCHGEAR "SUB2-SWGR-1L" (1)

15kV, 3ø, 3W, 2000A TIN PLATED COPPER BUS, RATED 1000MVA

MATCHLINE "D-D" ON DRAWING NO. [SUB2-E-058].

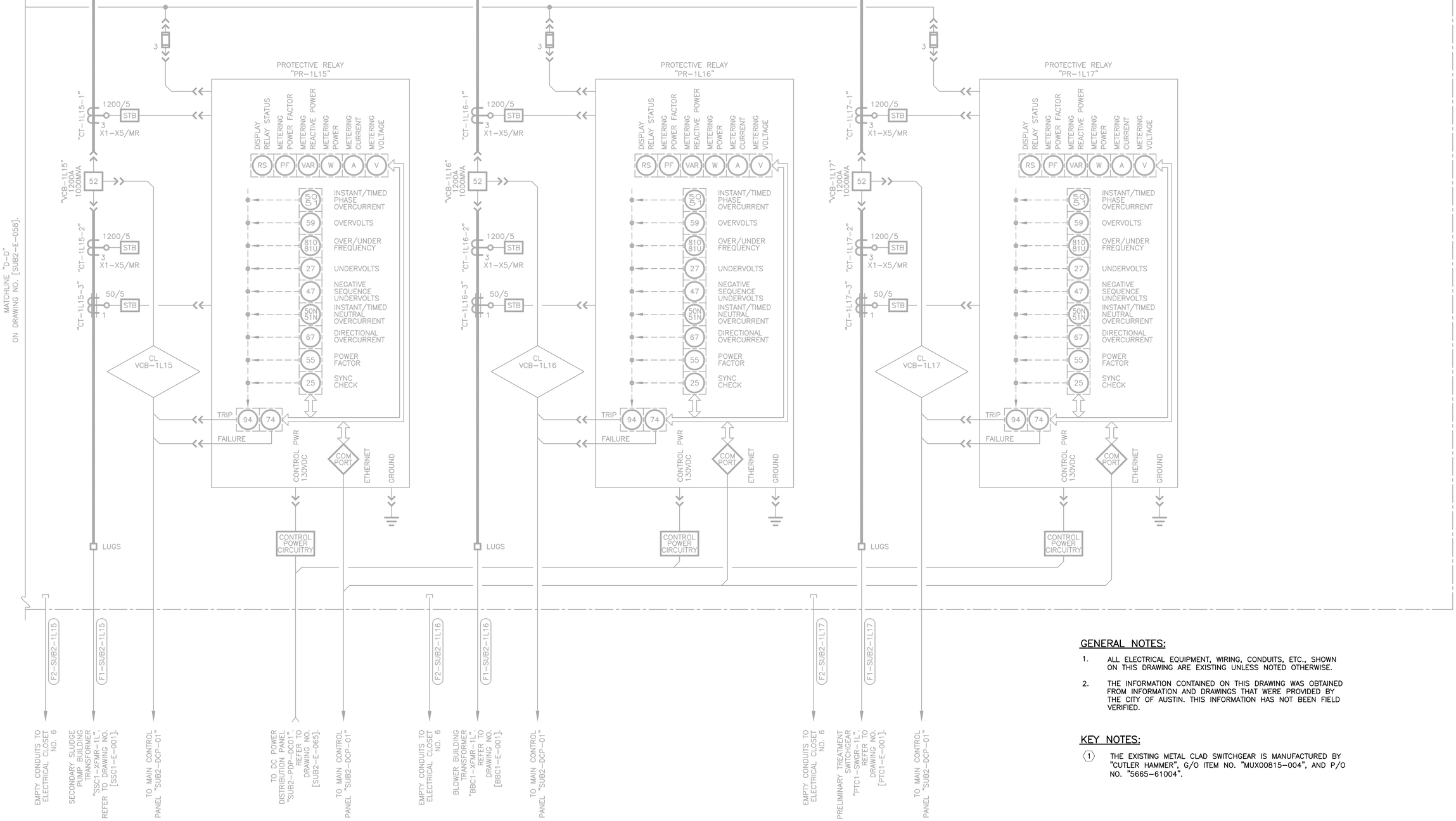

GENERAL NOTES:

1. ALL ELECTRICAL EQUIPMENT, WIRING, CONDUITS, ETC., SHOWN ON THIS DRAWING ARE EXISTING UNLESS NOTED OTHERWISE.
2. THE INFORMATION CONTAINED ON THIS DRAWING WAS OBTAINED FROM INFORMATION AND DRAWINGS THAT WERE PROVIDED BY THE CITY OF AUSTIN. THIS INFORMATION HAS NOT BEEN FIELD VERIFIED.

KEY NOTES:

(1) THE EXISTING METAL CLAD SWITCHGEAR IS MANUFACTURED BY "CUTLER HAMMER", G/O ITEM NO. "MUX00815-004", AND P/O NO. "5665-61004".

BAR LENGTH ON ORIGINAL DRAWING EQUALS ONE INCH, ADJUST SCALE ACCORDINGLY.

REUSE OF DOCUMENTS

This document, and the designs incorporated herein, is an instrument of professional service that has been developed, designed and prepared by Harutunian Engineering, Inc., and is not to be used, in whole or in part, for any other project without giving written notice to Harutunian Engineering, Inc.

NO.	DATE:	DESCRIPTION

HARUTUNIAN ENGINEERING INCORPORATED

TEXAS FIRM REGISTRATION NUMBER F-2408

ENGINEERING AND ENVIRONMENTAL CONSULTANTS
8100 CROSS PARK DRIVE
AUSTIN, TEXAS 78754

STATE OF TEXAS · SHANT HARUTUNIAN 87735 · REGISTERED PROFESSIONAL ENGINEER · 10/7/2019

DESIGNED BY:	HEI
CHECKED BY:	HEI
APPROVED BY:	HEI
SUBMITTAL DATE:	OCTOBER 2019
SCALE:	AS SHOWN

SOUTH AUSTIN REGIONAL WASTEWATER TREATMENT PLANT
ELECTRICAL SUBSTATION NO. 1 REPLACEMENT PROJECT
CIP I.D.# 3333.032

ELECTRICAL SUBSTATION NO. 2 DETAILED ONE-LINE DIAGRAM RENOVATION (SHEET 5 OF 11)

PROJECT NO: 2014-300 | SHT. 742 OF 866 | DWG NO. SUB2-E-059

12470V SWITCHGEAR "SUB2-SWGR-1R" (1)

15kV, 3ø, 3W, 2000A TIN PLATED COPPER BUS, RATED 1000MVA

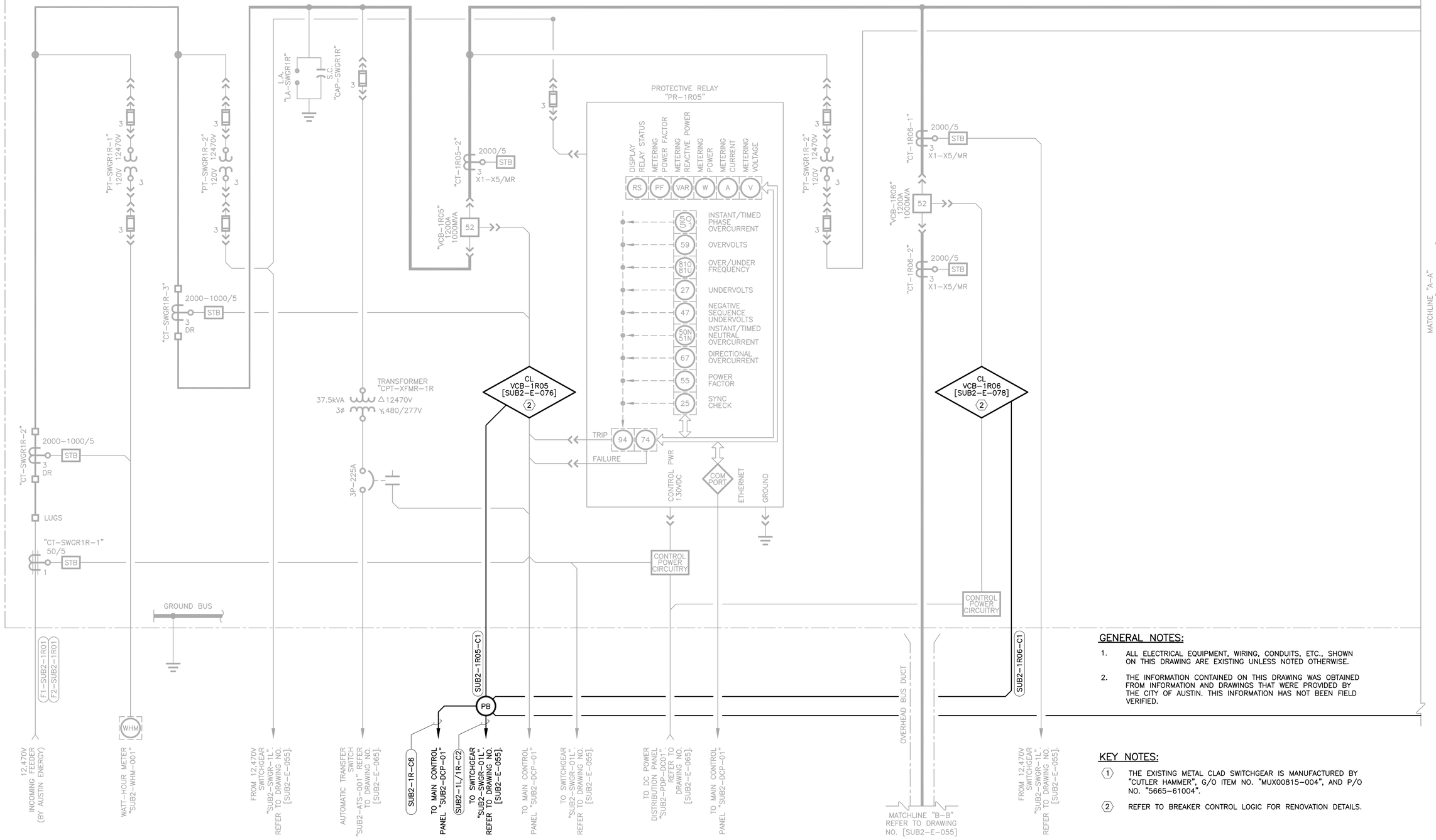

GENERAL NOTES:

1. ALL ELECTRICAL EQUIPMENT, WIRING, CONDUITS, ETC., SHOWN ON THIS DRAWING ARE EXISTING UNLESS NOTED OTHERWISE.
2. THE INFORMATION CONTAINED ON THIS DRAWING WAS OBTAINED FROM INFORMATION AND DRAWINGS THAT WERE PROVIDED BY THE CITY OF AUSTIN. THIS INFORMATION HAS NOT BEEN FIELD VERIFIED.

KEY NOTES:

(1) THE EXISTING METAL CLAD SWITCHGEAR IS MANUFACTURED BY "CUTLER HAMMER", G/O ITEM NO. "MUX00815-004", AND P/O NO. "5665-61004".

(2) REFER TO BREAKER CONTROL LOGIC FOR RENOVATION DETAILS.

BAR LENGTH ON ORIGINAL DRAWING EQUALS ONE INCH, ADJUST SCALE ACCORDINGLY.

REUSE OF DOCUMENTS

This document, and the designs incorporated herein, is an instrument of professional service that has been developed, designed and prepared by Harutunian Engineering, Inc., and is not to be used, in whole or in part, for any other project without giving written notice to Harutunian Engineering, Inc.

NO.	DATE:	DESCRIPTION

HARUTUNIAN ENGINEERING INCORPORATED

TEXAS FIRM REGISTRATION NUMBER F-2408

ENGINEERING AND ENVIRONMENTAL CONSULTANTS
8100 CROSS PARK DRIVE
AUSTIN, TEXAS 78754

STATE OF TEXAS
SHANT HARUTUNIAN
87735
REGISTERED
PROFESSIONAL ENGINEER
10/7/2019

DESIGNED BY:	HEI
CHECKED BY:	HEI
APPROVED BY:	HEI
SUBMITTAL DATE:	OCTOBER 2019
SCALE:	AS SHOWN

SOUTH AUSTIN REGIONAL WASTEWATER TREATMENT PLANT
ELECTRICAL SUBSTATION NO. 1 REPLACEMENT PROJECT
CIP I.D.# 3333.032

ELECTRICAL SUBSTATION NO. 2 DETAILED ONE-LINE DIAGRAM RENOVATION (SHEET 6 OF 11)

PROJECT NO: 2014-300 | SHT. 743 OF 866 | DWG NO. SUB2-E-060

12470V SWITCHGEAR "SUB2-SWGR-1R" (1)

15kV, 3ø, 3W, 2000A TIN PLATED COPPER BUS, RATED 1000MVA

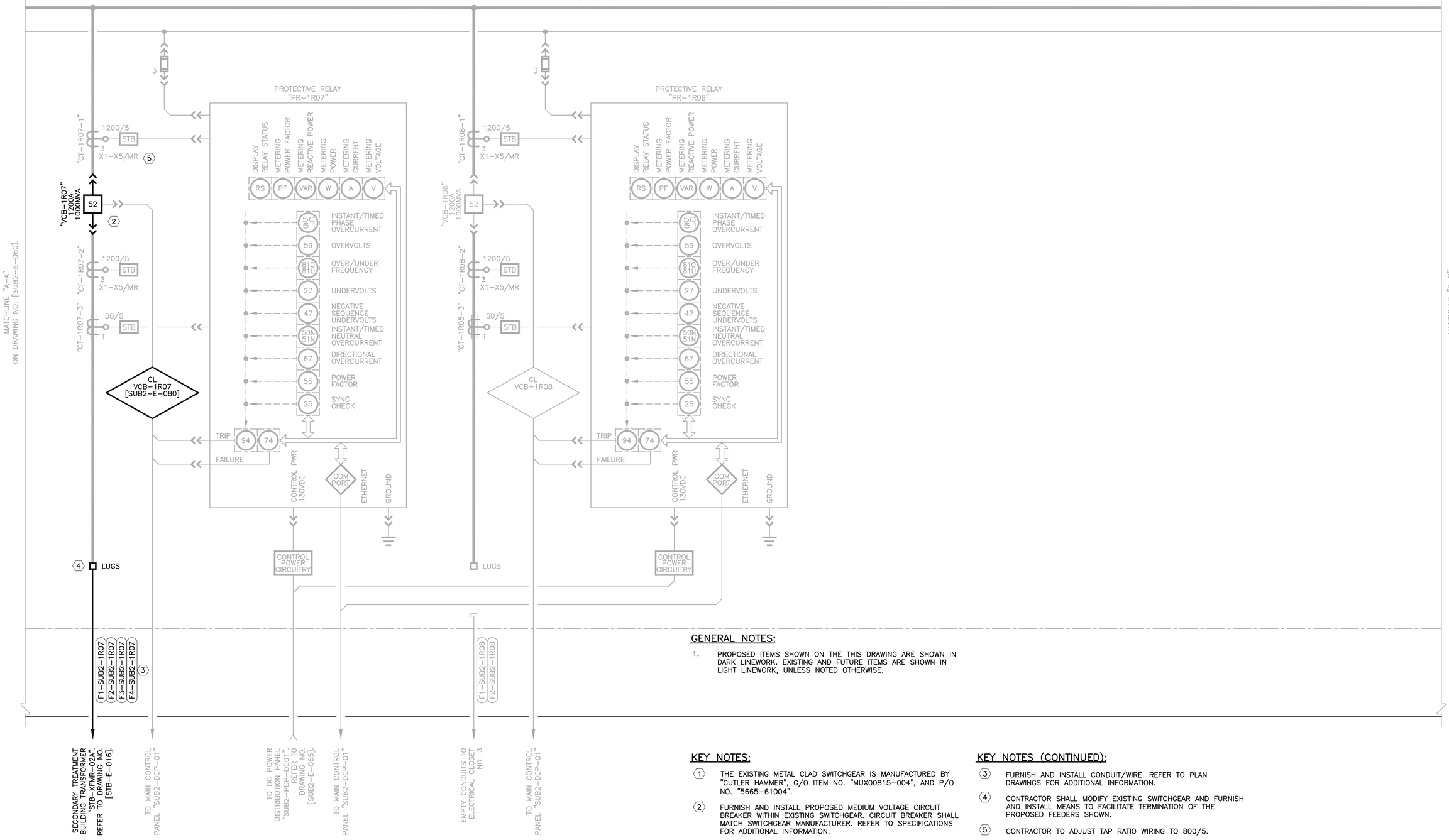

GENERAL NOTES:

1. PROPOSED ITEMS SHOWN ON THE THIS DRAWING ARE SHOWN IN DARK LINEWORK. EXISTING AND FUTURE ITEMS ARE SHOWN IN LIGHT LINEWORK, UNLESS NOTED OTHERWISE.

KEY NOTES:

(1) THE EXISTING METAL CLAD SWITCHGEAR IS MANUFACTURED BY "CUTLER HAMMER", G/O ITEM NO. "MUX00815-004", AND P/O NO. "5665-61004".

(2) FURNISH AND INSTALL PROPOSED MEDIUM VOLTAGE CIRCUIT BREAKER WITHIN EXISTING SWITCHGEAR. CIRCUIT BREAKER SHALL MATCH SWITCHGEAR MANUFACTURER. REFER TO SPECIFICATIONS FOR ADDITIONAL INFORMATION.

KEY NOTES (CONTINUED):

(3) FURNISH AND INSTALL CONDUIT/WIRE. REFER TO PLAN DRAWINGS FOR ADDITIONAL INFORMATION.

(4) CONTRACTOR SHALL MODIFY EXISTING SWITCHGEAR AND FURNISH AND INSTALL MEANS TO FACILITATE TERMINATION OF THE PROPOSED FEEDERS SHOWN.

(5) CONTRACTOR TO ADJUST TAP RATIO WIRING TO 800/5.

BAR LENGTH ON ORIGINAL DRAWING EQUALS ONE INCH, ADJUST SCALE ACCORDINGLY.

REUSE OF DOCUMENTS

This document, and the designs incorporated herein, is an instrument of professional service that has been developed, designed and prepared by Harutunian Engineering, Inc., and is not to be used, in whole or in part, for any other project without giving written notice to Harutunian Engineering, Inc.

NO.	DATE:	DESCRIPTION

HARUTUNIAN ENGINEERING INCORPORATED

TEXAS FIRM REGISTRATION NUMBER F-2408

ENGINEERING AND ENVIRONMENTAL CONSULTANTS
8100 CROSS PARK DRIVE
AUSTIN, TEXAS 78754

STATE OF TEXAS — SHANT HARUTUNIAN 87735 — REGISTERED PROFESSIONAL ENGINEER — 10/7/2019

DESIGNED BY:	HEI
CHECKED BY:	HEI
APPROVED BY:	HEI
SUBMITTAL DATE:	OCTOBER 2019
SCALE:	AS SHOWN

SOUTH AUSTIN REGIONAL WASTEWATER TREATMENT PLANT
ELECTRICAL SUBSTATION NO. 1 REPLACEMENT PROJECT
CIP I.D.# 3333.032

ELECTRICAL SUBSTATION NO. 2 DETAILED ONE-LINE DIAGRAM RENOVATION (SHEET 7 OF 11)

PROJECT NO: 2014-300 | SHT. 744 OF 866 | DWG NO. SUB2-E-061

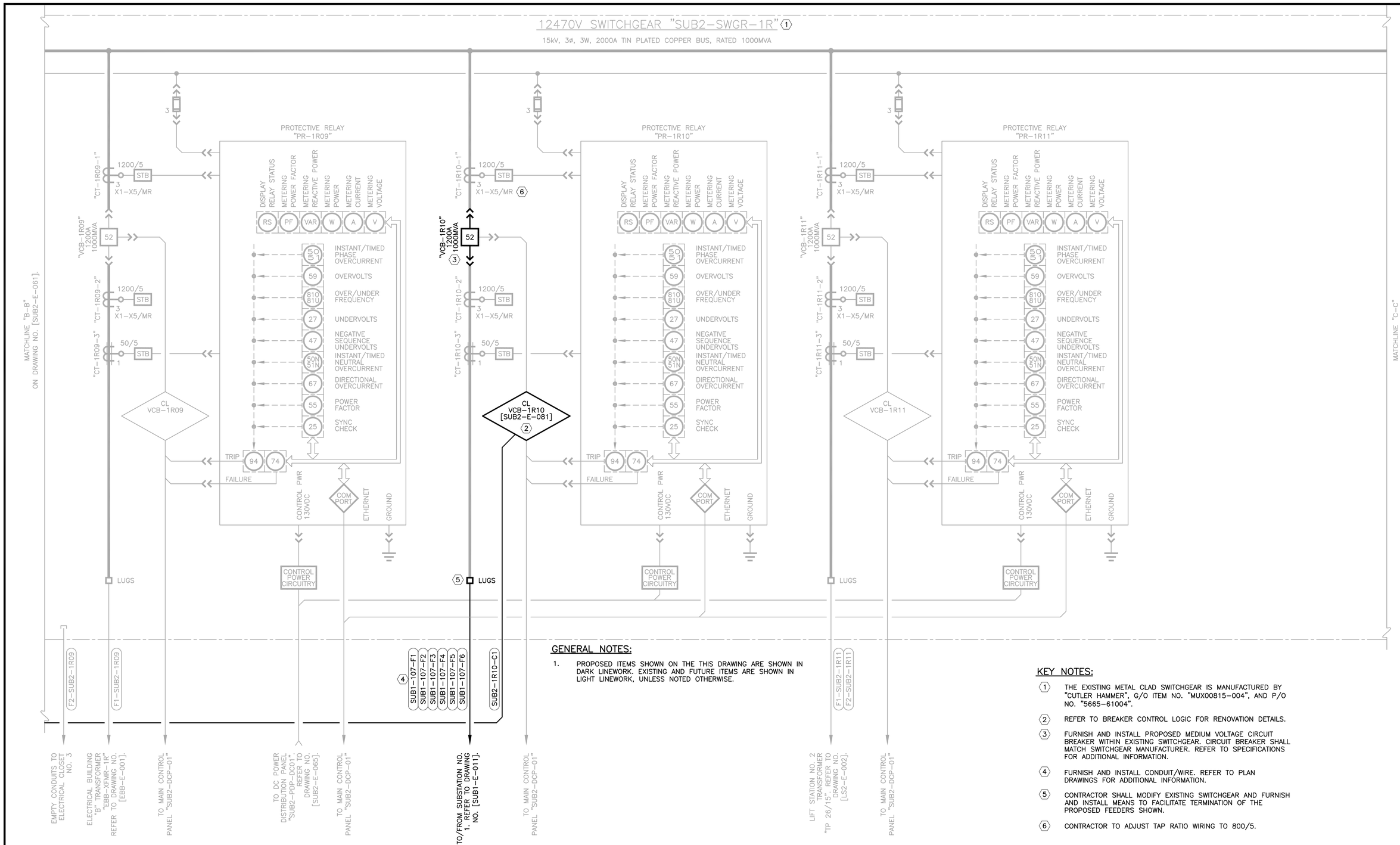

GENERAL NOTES:

1. PROPOSED ITEMS SHOWN ON THE THIS DRAWING ARE SHOWN IN DARK LINEWORK. EXISTING AND FUTURE ITEMS ARE SHOWN IN LIGHT LINEWORK, UNLESS NOTED OTHERWISE.

KEY NOTES:

1. THE EXISTING METAL CLAD SWITCHGEAR IS MANUFACTURED BY "CUTLER HAMMER", G/O ITEM NO. "MUX00815-004", AND P/O NO. "5665-61004".
2. REFER TO BREAKER CONTROL LOGIC FOR RENOVATION DETAILS.
3. FURNISH AND INSTALL PROPOSED MEDIUM VOLTAGE CIRCUIT BREAKER WITHIN EXISTING SWITCHGEAR. CIRCUIT BREAKER SHALL MATCH SWITCHGEAR MANUFACTURER. REFER TO SPECIFICATIONS FOR ADDITIONAL INFORMATION.
4. FURNISH AND INSTALL CONDUIT/WIRE. REFER TO PLAN DRAWINGS FOR ADDITIONAL INFORMATION.
5. CONTRACTOR SHALL MODIFY EXISTING SWITCHGEAR AND FURNISH AND INSTALL MEANS TO FACILITATE TERMINATION OF THE PROPOSED FEEDERS SHOWN.
6. CONTRACTOR TO ADJUST TAP RATIO WIRING TO 800/5.

BAR LENGTH ON ORIGINAL DRAWING EQUALS ONE INCH, ADJUST SCALE ACCORDINGLY.

REUSE OF DOCUMENTS

This document, and the designs incorporated herein, is an instrument of professional service that has been developed, designed and prepared by Harutunian Engineering, Inc., and is not to be used, in whole or in part, for any other project without giving written notice to Harutunian Engineering, Inc.

NO.	DATE:	DESCRIPTION

HARUTUNIAN ENGINEERING INCORPORATED
TEXAS FIRM REGISTRATION NUMBER F-2408
ENGINEERING AND ENVIRONMENTAL CONSULTANTS
8100 CROSS PARK DRIVE
AUSTIN, TEXAS 78754

STATE OF TEXAS · SHANT HARUTUNIAN 87735 · REGISTERED PROFESSIONAL ENGINEER
10/7/2019

DESIGNED BY:	HEI
CHECKED BY:	HEI
APPROVED BY:	HEI
SUBMITTAL DATE:	OCTOBER 2019
SCALE:	AS SHOWN

SOUTH AUSTIN REGIONAL WASTEWATER TREATMENT PLANT
ELECTRICAL SUBSTATION NO. 1 REPLACEMENT PROJECT
CIP I.D.# 3333.032

ELECTRICAL SUBSTATION NO. 2 DETAILED ONE-LINE DIAGRAM RENOVATION (SHEET 8 OF 11)

PROJECT NO: 2014-300 | SHT. 745 OF 866 | DWG NO. SUB2-E-062

12470V SWITCHGEAR "SUB2-SWGR-1R" (1)

15kV, 3ø, 3W, 2000A TIN PLATED COPPER BUS, RATED 1000MVA

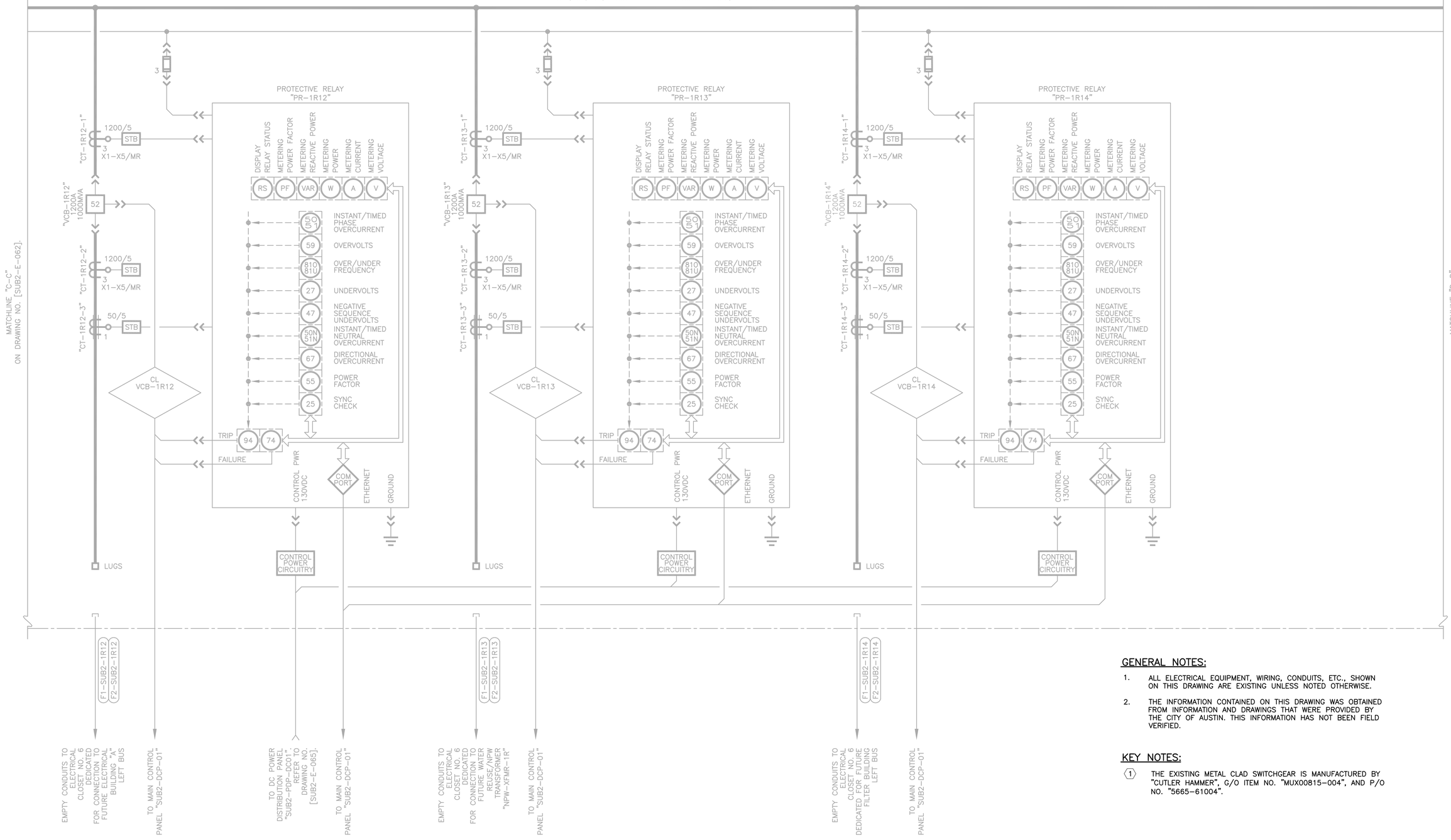

GENERAL NOTES:

1. ALL ELECTRICAL EQUIPMENT, WIRING, CONDUITS, ETC., SHOWN ON THIS DRAWING ARE EXISTING UNLESS NOTED OTHERWISE.
2. THE INFORMATION CONTAINED ON THIS DRAWING WAS OBTAINED FROM INFORMATION AND DRAWINGS THAT WERE PROVIDED BY THE CITY OF AUSTIN. THIS INFORMATION HAS NOT BEEN FIELD VERIFIED.

KEY NOTES:

(1) THE EXISTING METAL CLAD SWITCHGEAR IS MANUFACTURED BY "CUTLER HAMMER", G/O ITEM NO. "MUX00815-004", AND P/O NO. "5665-61004".

BAR LENGTH ON ORIGINAL DRAWING EQUALS ONE INCH, ADJUST SCALE ACCORDINGLY.

REUSE OF DOCUMENTS

This document, and the designs incorporated herein, is an instrument of professional service that has been developed, designed and prepared by Harutunian Engineering, Inc., and is not to be used, in whole or in part, for any other project without giving written notice to Harutunian Engineering, Inc.

NO.	DATE:	DESCRIPTION

HARUTUNIAN ENGINEERING INCORPORATED

TEXAS FIRM REGISTRATION NUMBER F-2408

ENGINEERING AND ENVIRONMENTAL CONSULTANTS
8100 CROSS PARK DRIVE
AUSTIN, TEXAS 78754

STATE OF TEXAS · SHANT HARUTUNIAN 87735 · REGISTERED PROFESSIONAL ENGINEER · 10/7/2019

DESIGNED BY:	HEI
CHECKED BY:	HEI
APPROVED BY:	HEI
SUBMITTAL DATE:	OCTOBER 2019
SCALE:	AS SHOWN

SOUTH AUSTIN REGIONAL WASTEWATER TREATMENT PLANT
ELECTRICAL SUBSTATION NO. 1 REPLACEMENT PROJECT
CIP I.D.# 3333.032

ELECTRICAL SUBSTATION NO. 2 DETAILED ONE-LINE DIAGRAM RENOVATION (SHEET 9 OF 11)

PROJECT NO: 2014-300 | SHT. 746 OF 866 | DWG NO. SUB2-E-063

12470V SWITCHGEAR "SUB2-SWGR-1R" (1)

15kV, 3ø, 3W, 2000A TIN PLATED COPPER BUS, RATED 1000MVA

MATCHLINE "D-D" ON DRAWING NO. [SUB2-E-063].

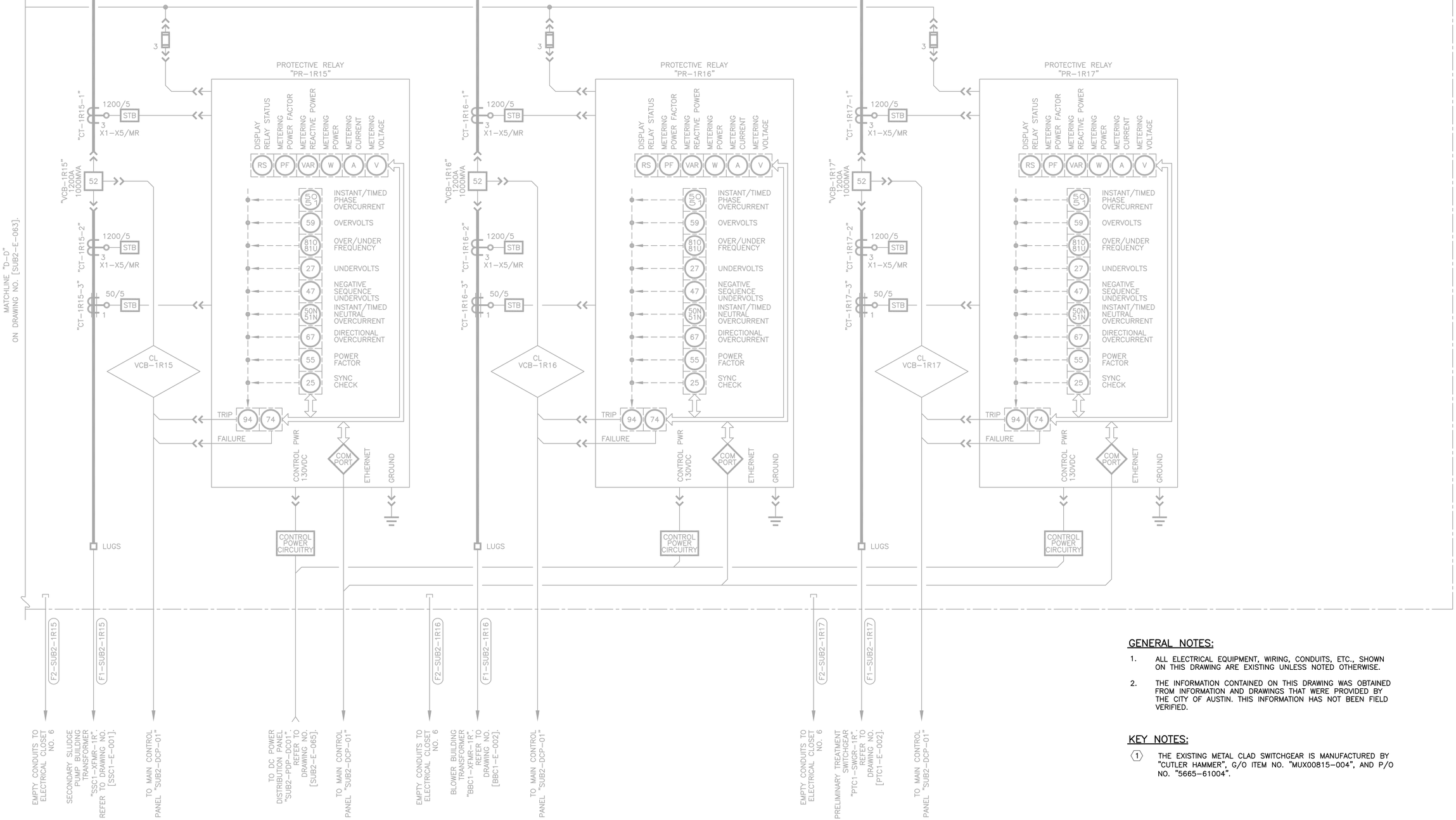

GENERAL NOTES:

1. ALL ELECTRICAL EQUIPMENT, WIRING, CONDUITS, ETC., SHOWN ON THIS DRAWING ARE EXISTING UNLESS NOTED OTHERWISE.
2. THE INFORMATION CONTAINED ON THIS DRAWING WAS OBTAINED FROM INFORMATION AND DRAWINGS THAT WERE PROVIDED BY THE CITY OF AUSTIN. THIS INFORMATION HAS NOT BEEN FIELD VERIFIED.

KEY NOTES:

(1) THE EXISTING METAL CLAD SWITCHGEAR IS MANUFACTURED BY "CUTLER HAMMER", G/O ITEM NO. "MUX00815-004", AND P/O NO. "5665-61004".

BAR LENGTH ON ORIGINAL DRAWING EQUALS ONE INCH, ADJUST SCALE ACCORDINGLY.

REUSE OF DOCUMENTS

This document, and the designs incorporated herein, is an instrument of professional service that has been developed, designed and prepared by Harutunian Engineering, Inc., and is not to be used, in whole or in part, for any other project without giving written notice to Harutunian Engineering, Inc.

NO.	DATE:	DESCRIPTION

HARUTUNIAN ENGINEERING INCORPORATED

TEXAS FIRM REGISTRATION NUMBER F-2408

ENGINEERING AND ENVIRONMENTAL CONSULTANTS
8100 CROSS PARK DRIVE
AUSTIN, TEXAS 78754

STATE OF TEXAS · SHANT HARUTUNIAN 87735 · REGISTERED PROFESSIONAL ENGINEER · 10/7/2019

DESIGNED BY:	HEI
CHECKED BY:	HEI
APPROVED BY:	HEI
SUBMITTAL DATE:	OCTOBER 2019
SCALE:	AS SHOWN

SOUTH AUSTIN REGIONAL WASTEWATER TREATMENT PLANT
ELECTRICAL SUBSTATION NO. 1 REPLACEMENT PROJECT
CIP I.D.# 3333.032

ELECTRICAL SUBSTATION NO. 2 DETAILED ONE-LINE DIAGRAM RENOVATION (SHEET 10 OF 11)

PROJECT NO: 2014-300 | SHT. 747 OF 866 | DWG NO. SUB2-E-064

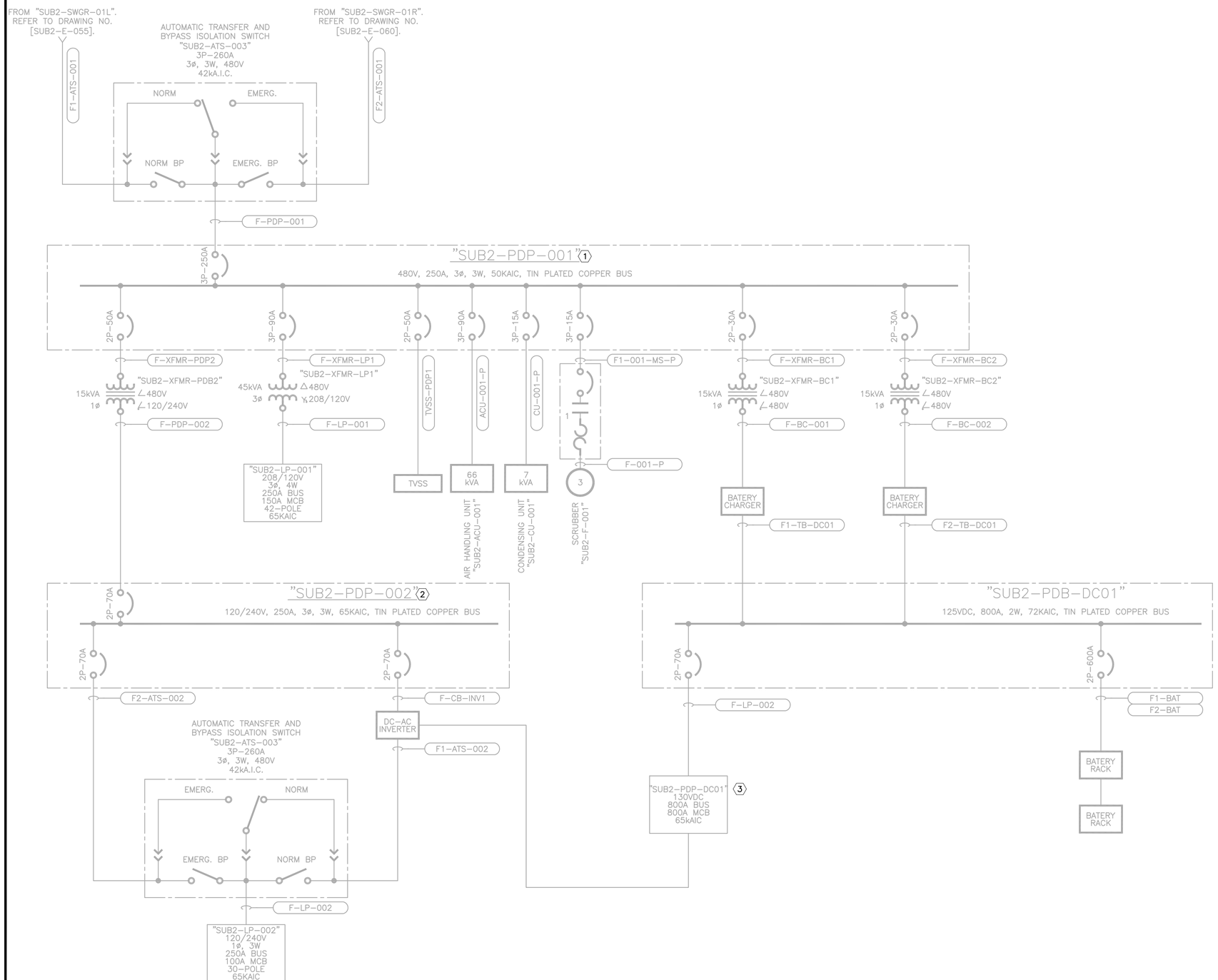

GENERAL NOTES:

1. ALL ELECTRICAL EQUIPMENT, WIRING, CONDUITS, ETC., SHOWN ON THIS DRAWING ARE EXISTING UNLESS NOTED OTHERWISE.
2. THE INFORMATION CONTAINED ON THIS DRAWING WAS OBTAINED FROM INFORMATION AND DRAWINGS THAT WERE PROVIDED BY THE CITY OF AUSTIN. THIS INFORMATION HAS NOT BEEN FIELD VERIFIED.

KEY NOTES:

1. THE EXISTING 480V POWER DISTRIBUTION PANEL IS MANUFACTURED BY "EATON ELECTRICAL", MODEL NO. "P4E250BT22TH00".
2. THE EXISTING 240/120V POWER DISTRIBUTION PANEL IS MANUFACTURED BY "EATON ELECTRICAL", MODEL NO. "P3C250BT26TH12".
3. THE EXISTING 130VDC POWER DISTRIBUTION BUS IS MANUFACTURED BY "EATON ELECTRICAL", MODEL NO. "P4D800BT36TH01".

BAR LENGTH ON ORIGINAL DRAWING EQUALS ONE INCH, ADJUST SCALE ACCORDINGLY.

REUSE OF DOCUMENTS

This document, and the designs incorporated herein, is an instrument of professional service that has been developed, designed and prepared by Harutunian Engineering, Inc., and is not to be used, in whole or in part, for any other project without giving written notice to Harutunian Engineering, Inc.

NO.	DATE:	DESCRIPTION

HARUTUNIAN ENGINEERING INCORPORATED
TEXAS FIRM REGISTRATION NUMBER F-2408
ENGINEERING AND ENVIRONMENTAL CONSULTANTS
8100 CROSS PARK DRIVE
AUSTIN, TEXAS 78754

STATE OF TEXAS
SHANT HARUTUNIAN
87735
REGISTERED
PROFESSIONAL ENGINEER
10/7/2019

DESIGNED BY:	HEI
CHECKED BY:	HEI
APPROVED BY:	HEI
SUBMITTAL DATE:	OCTOBER 2019
SCALE:	AS SHOWN

SOUTH AUSTIN REGIONAL WASTEWATER TREATMENT PLANT
ELECTRICAL SUBSTATION NO. 1 REPLACEMENT PROJECT
CIP I.D.# 3333.032

ELECTRICAL SUBSTATION NO. 2 DETAILED ONE-LINE DIAGRAM RENOVATION (SHEET 11 OF 11)

PROJECT NO: 2014-300 | SHT. 748 OF 866 | DWG NO. SUB2-E-065

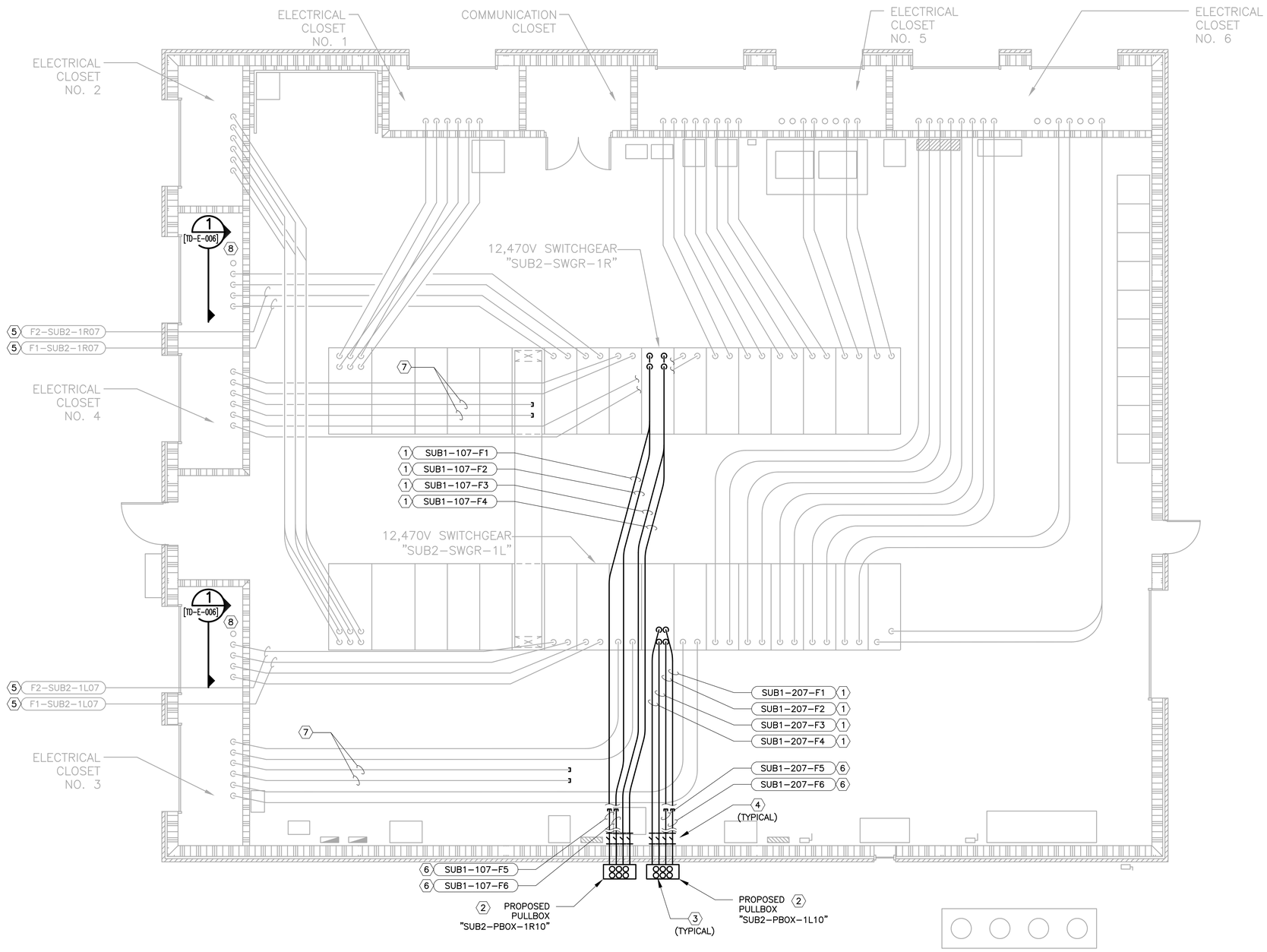

KEY NOTES:

1. PROPOSED CONDUIT ENTERS EXISTING SWITCHGEAR SECTION NUMBER 10. ROUTE CONDUIT/WIRE IN CEILING SPACE ABOVE LOW VOLTAGE CONDUIT RACEWAY AND HVAC DUCT. SUSPEND CONDUIT FROM TRUSS SIMILAR TO DETAIL 4 ON DRAWING NO. [TD-E-004].
2. FURNISH AND INSTALL PULLBOX MINIMALLY SIZED 48"H x 36"W x 16" D, PER THE NATIONAL ELECTRICAL CODE (N.E.C.). SECURE PULLBOX TO BUILDING EXTERIOR PER DETAIL 1 ON DRAWING NO. [TD-E-010]. MOUNT PULLBOX AT A MINIMUM OF +12'-0" ABOVE FINISHED GRADE, COORDINATE EXACT HEIGHT WITH EXISTING 5" CONDUIT SUPPORT SYSTEM WITHIN THE SUBSTATION BUILDING. CONDUITS TO EXIT REAR OF PULLBOX AND ENTER SUBSTATION BUILDING.
3. CONDUIT/WIRE EXITS BOTTOM OF PULLBOX AND CONTINUES IN UNDERGROUND DUCTBANK. REFER TO DRAWING NOS. [SUB2-E-068] AND [S-E-194] FOR ADDITIONAL INFORMATION AND CONTINUATION.
4. FURNISH AND INSTALL SEALING FITTINGS PER SPECIFICATIONS.
5. FURNISH AND INSTALL PROPOSED CABLE/WIRE IN EXISTING CONDUIT. REFER TO DRAWING NO. [SUB2-E-068] FOR ADDITIONAL INFORMATION.
6. SPARE CONDUITS ARE ROUTED ON THE BOTTOM LAYER OF THE PROPOSED CONDUIT SUPPORT SYSTEM. CONDUITS EXIT REAR OF PULLBOX, PENETRATE SUBSTATION BUILDING EXTERIOR WALL AND ARE CAPPED WITHIN THE BUILDING FOR FUTURE USE.
7. EXISTING EMPTY CONDUIT TO REMAIN AS SPARE. CAP CONDUIT ENDS.
8. ALTHOUGH NOT SHOWN IN THIS VIEW, PROPOSED CABLE/WIRE CONTINUES TO/FROM 15KV CABLE CLOSET AND TO/FROM DUCT BANK SYSTEM VIA 15KV CLOSET. THE 15KV CLOSET ELEVATION SHOWN IN THE TYPICAL DETAIL SHALL BE EMPLOYED AS A MINIMUM SET OF GUIDELINE REQUIREMENTS THAT ARE TYPICAL FOR EACH 15KV CABLE CLOSET. THE REFERENCED CLOSET TYPICAL DETAIL DOES NOT DEPICT THE EXACT CONDUIT/WIRE STUB-UP ARRANGEMENT AND THE ENTIRE CONTENTS OF EACH 15KV CLOSET. THE CONTRACTOR SHALL EMPLOY THE CLOSET TYPICAL DETAIL AS A GUIDELINE BASE OF MINIMUM REQUIREMENTS ASSOCIATED WITH EACH 15KV CLOSET.

N
PLANT NORTH

SUBSTATION NO. 2
SCALE: 3/16" = 1'

BAR LENGTH ON ORIGINAL DRAWING EQUALS ONE INCH, ADJUST SCALE ACCORDINGLY.

REUSE OF DOCUMENTS

This document, and the designs incorporated herein, is an instrument of professional service that has been developed, designed and prepared by Harutunian Engineering, Inc., and is not to be used, in whole or in part, for any other project without giving written notice to Harutunian Engineering, Inc.

NO.	DATE:	DESCRIPTION

HARUTUNIAN ENGINEERING INCORPORATED
TEXAS FIRM REGISTRATION NUMBER F-2408
ENGINEERING AND ENVIRONMENTAL CONSULTANTS
8100 CROSS PARK DRIVE
AUSTIN, TEXAS 78754

STATE OF TEXAS · SHANT HARUTUNIAN · 87735 · REGISTERED PROFESSIONAL ENGINEER · 10/7/2019

DESIGNED BY:	HEI
CHECKED BY:	HEI
APPROVED BY:	HEI
SUBMITTAL DATE:	OCTOBER 2019
SCALE:	AS SHOWN

SOUTH AUSTIN REGIONAL WASTEWATER TREATMENT PLANT
ELECTRICAL SUBSTATION NO. 1 REPLACEMENT PROJECT
CIP I.D.# 3333.032

ELECTRICAL SUBSTATION NO. 2
15kV POWER CONDUIT ROUTING PLAN – RENOVATION

PROJECT NO: 2014-300 | SHT. 749 OF 866 | DWG NO. SUB2-E-066

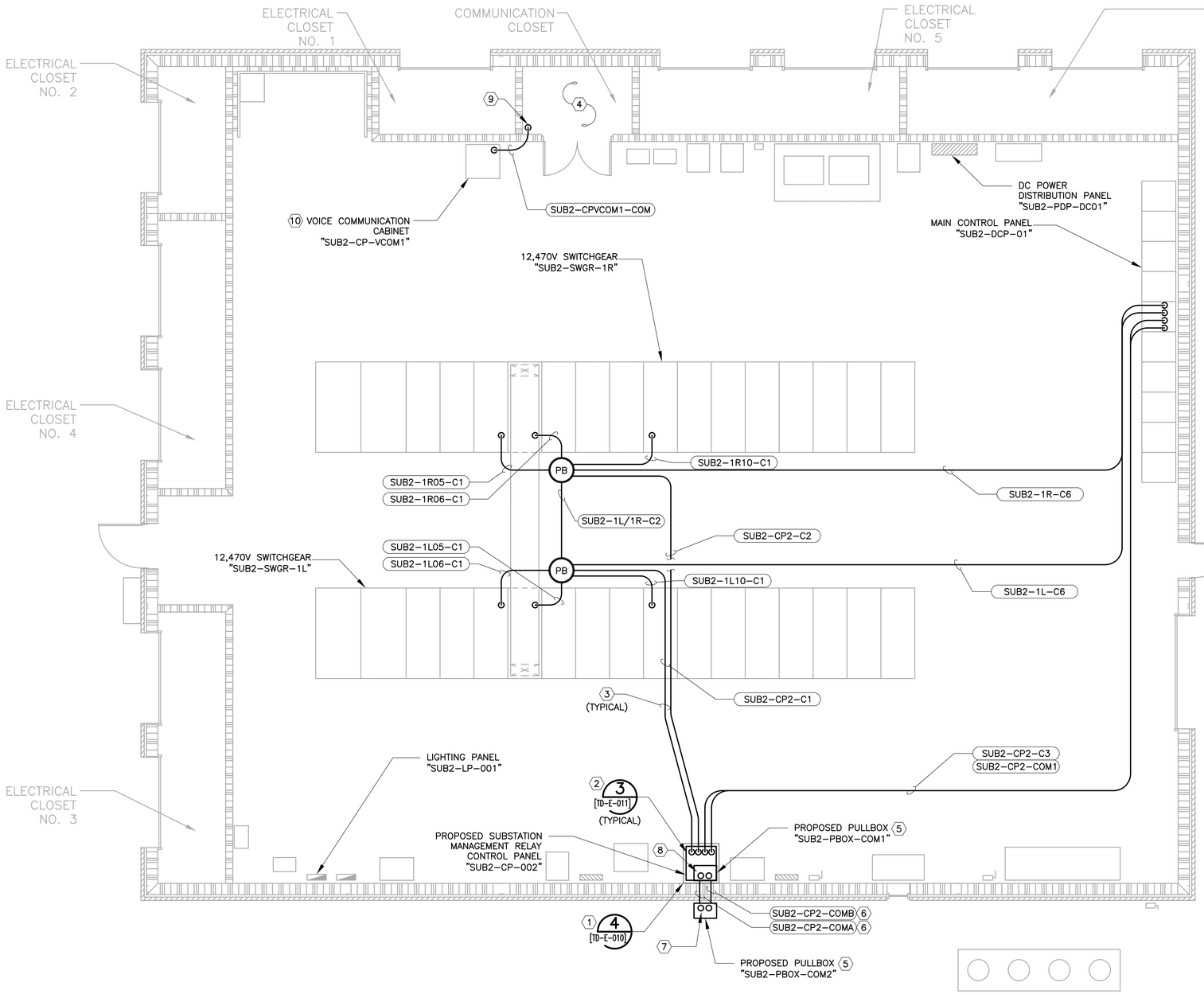

N
PLANT NORTH

SUBSTATION NO. 2 I&C PLAN
SCALE: 3/16" = 1'

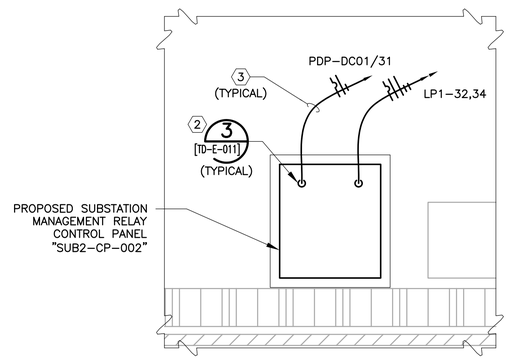

N
PLANT NORTH

SUBSTATION NO. 2 AUXILIARY PLAN (1)
SCALE: 1/2" = 1'

KEY NOTES:

1. FURNISH AND INSTALL INDOOR EQUIPMENT PAD PER DETAIL 4 ON DRAWING NO. [TD-E-010].
2. CONDUIT/WIRE ENTERS EQUIPMENT PER DETAIL 3 ON DRAWING NO. [TD-E-011]. COORDINATE CONDUIT ENTRY LOCATION WITH EQUIPMENT MANUFACTURER.
3. SUPPORT CONDUIT/WIRE FROM EXISTING CONDUIT SUPPORT RACKS WHERE AVAILABLE. FURNISH AND INSTALL PROPOSED CONDUIT SUPPORT RACK PER DETAILS ON DRAWING NO. [TD-E-004] IF NECESSARY.
4. FURNISH AND INSTALL PROPOSED FIBER OPTIC PATCH PANELS "SUB2-FOPP-02-A" AND "SUB2-FOPP-02-B" ON EXISTING RACK LOCATED IN THE COMMUNICATION CLOSET. REFER TO DRAWING NOS. [SUB2-E-088] AND [SUB2-I-002].
5. FURNISH AND INSTALL PULLBOX MINIMALLY SIZED 36"H x 24"W x 12" D, PER THE NATIONAL ELECTRICAL CODE (N.E.C.). SECURE PULLBOX TO BUILDING EXTERIOR PER DETAIL 1 ON DRAWING NO. [TD-E-010]. MOUNT PULLBOX AT A MINIMUM OF +12'-0" ABOVE FINISHED GRADE, COORDINATE EXACT HEIGHT WITH ADJACENT PULLBOXES SHOWN ON DRAWING NO. [SUB2-E-068].
6. PROPOSED CONDUIT/WIRE PENETRATES THROUGH STRUCTURAL WALL ACCORDING TO THE DETAIL 4 ON DRAWING NO. [TD-E-009]. CONTRACTOR TO SEAL/PACK COMPLETELY THE INTERIOR AREA OF CONDUIT AROUND WIRE WITH APPROVED SEALANT/FIRE RETARDANT TO PREVENT THE TRANSFER OF CORROSIVE GASES INTO THE INTERIOR AREA OF THE SUBSTATION NO. 2 BUILDING. SEALING FITTING PER SPECIFICATION MAY BE SUBSTITUTED FOR DESCRIBED PROCEDURE AT CONTRACTORS DISCRETION.
7. CONDUIT/WIRE EXITS BOTTOM OF PULLBOX AND CONTINUES IN UNDERGROUND DUCTBANK. REFER TO DRAWING NOS. [SUB2-E-068] AND [S-E-194] FOR ADDITIONAL INFORMATION AND CONTINUATION.
8. CONDUITS ROUTED BETWEEN PULLBOX AND CONTROL PANEL.
9. CONDUIT TURN ENDS AND FIBER OPTIC CABLE ENTERS FROM CABLE RACK INTO CONDUIT.
10. COIL TYPE II FIBER OPTIC CABLES WITHIN CONTROL PANEL. COORDINATE EXCESS LENGTH WITH OWNER.

BAR LENGTH ON ORIGINAL DRAWING EQUALS ONE INCH, ADJUST SCALE ACCORDINGLY.

REUSE OF DOCUMENTS

This document, and the designs incorporated herein, is an instrument of professional service that has been developed, designed and prepared by Harutunian Engineering, Inc., and is not to be used, in whole or in part, for any other project without giving written notice to Harutunian Engineering, Inc.

NO.	DATE:	DESCRIPTION

HARUTUNIAN ENGINEERING INCORPORATED
TEXAS FIRM REGISTRATION NUMBER F-2408
ENGINEERING AND ENVIRONMENTAL CONSULTANTS
8100 CROSS PARK DRIVE
AUSTIN, TEXAS 78754

STATE OF TEXAS · SHANT HARUTUNIAN · 87735 · REGISTERED · PROFESSIONAL ENGINEER
10/7/2019

DESIGNED BY:	HEI
CHECKED BY:	HEI
APPROVED BY:	HEI
SUBMITTAL DATE:	OCTOBER 2019
SCALE:	AS SHOWN

SOUTH AUSTIN REGIONAL WASTEWATER TREATMENT PLANT
ELECTRICAL SUBSTATION NO. 1 REPLACEMENT PROJECT
CIP I.D.# 3333.032

ELECTRICAL SUBSTATION NO. 2
AUXILIARY AND I&C PLAN – RENOVATION

PROJECT NO: 2014-300 | SHT. 750 OF 866 | DWG NO. SUB2-E-067

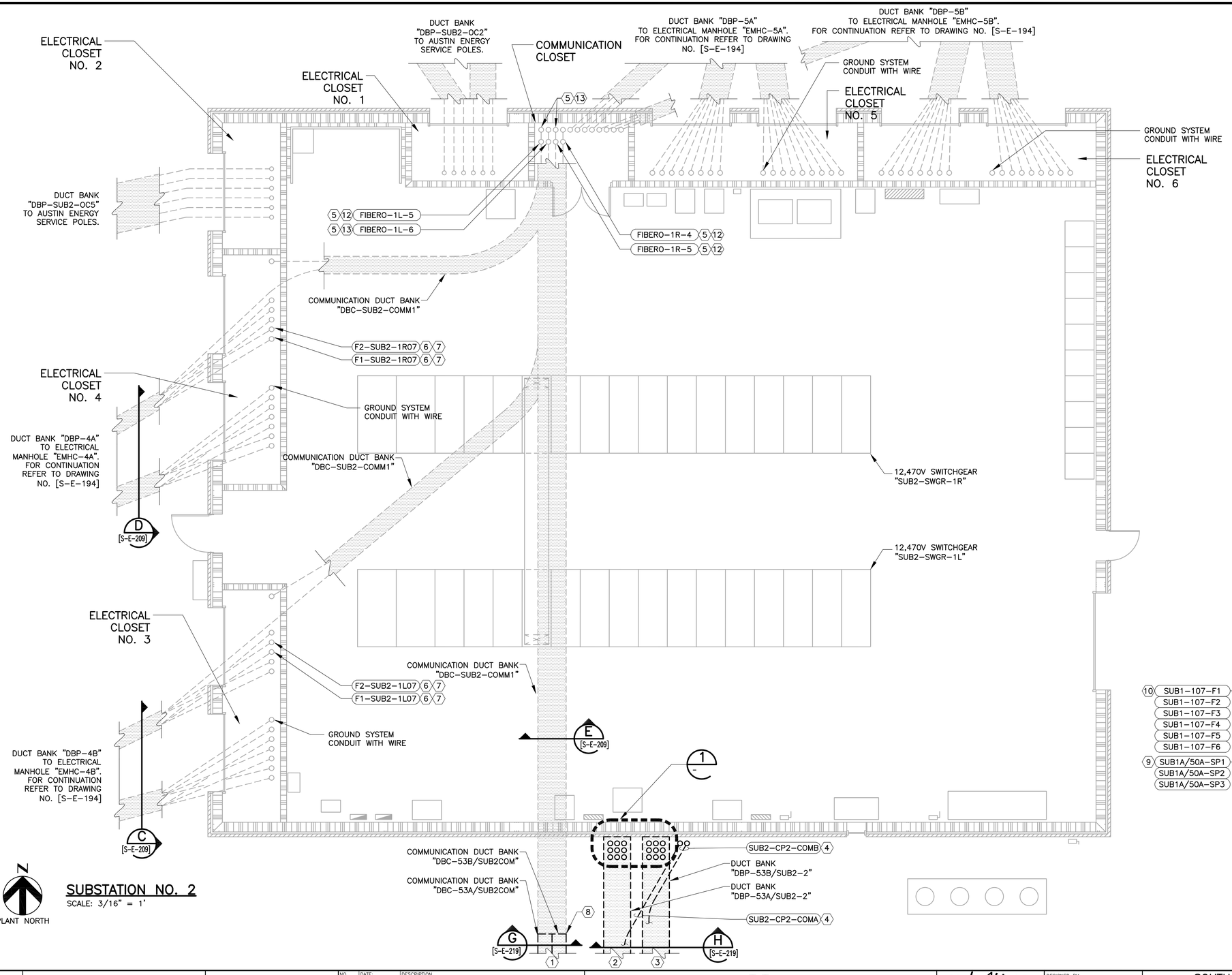

SUBSTATION NO. 2

SCALE: 3/16" = 1'

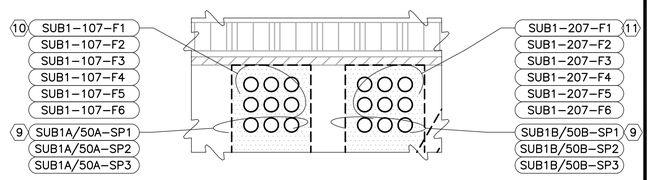

DETAIL 1

SCALE: 3/8" = 1'

KEY NOTES:

1. DUCTBANK SPLITS AND CONTINUES TO MANHOLES "MH-53A" AND "MH-53B" ON DRAWING NO. [S-E-194].
2. DUCTBANK CONTINUES TO MANHOLE "MH-53A" ON DRAWING NO. [S-E-194].
3. DUCTBANK CONTINUES TO MANHOLE "MH-53B" ON DRAWING NO. [S-E-194].
4. CONDUITS TURN UP/DOWN EXTERIOR WALL TO PULLBOX "SUB2-PBOX-COM2" SHOWN ON DRAWING NO. [SUB2-E-067].
5. EXISTING CONDUIT STUBS-UP AND IS CAPPED WITHIN 12" OF FINISHED FLOOR. REMOVE CAP/SEAL FROM EXISTING CONDUIT AND EXTEND 5" CONDUIT TO CABLE RACK ELEVATION.
6. FURNISH AND INSTALL PROPOSED CABLE/WIRE IN EXISTING CONDUIT. REFER TO DRAWING NO. [SUB2-E-066] FOR ADDITIONAL INFORMATION.
7. RACK CABLE/WIRE EXPOSED IN CABLE CLOSET ON EXISTING RACKS. WRAP CABLE/WIRE WITH FIRE TAPE COATING OVER THEIR ENTIRE EXPOSED LENGTH AS PER SPECIFICATIONS.
8. PROPOSED DUCTBANK INTERCONNECTS WITH EXISTING DUCTBANK PER DETAIL 1 ON DRAWING NO. [TD-E-007].
9. STUB-UP EMPTY SPARE CONDUIT AT MINIMUM OF 12" ABOVE FINISHED GRADE AND SEAL AND CAP.
10. CONDUITS TURN UP/DOWN EXTERIOR WALL TO PULLBOX "SUB2-PBOX-1R10" SHOWN ON DRAWING NO. [SUB2-E-066].
11. CONDUITS TURN UP/DOWN EXTERIOR WALL TO PULLBOX "SUB2-PBOX-1L10" SHOWN ON DRAWING NO. [SUB2-E-066].
12. PULL PROPOSED FIBER OPTIC CABLE THROUGH CONDUIT ONTO COMMUNICATION CLOSET OVERHEAD RACK. REFER TO DRAWING NOS. [SUB2-E-067] AND [SUB2-I-002] FOR ADDITIONAL INFORMATION.
13. CAP AND SEAL CONDUIT SIMILAR TO DETAIL 5 ON DRAWING NO. [TD-E-009].

BAR LENGTH ON ORIGINAL DRAWING EQUALS ONE INCH, ADJUST SCALE ACCORDINGLY.

REUSE OF DOCUMENTS

This document, and the designs incorporated herein, is an instrument of professional service that has been developed, designed and prepared by Harutunian Engineering, Inc., and is not to be used, in whole or in part, for any other project without giving written notice to Harutunian Engineering, Inc.

NO.	DATE:	DESCRIPTION

HARUTUNIAN ENGINEERING INCORPORATED

TEXAS FIRM REGISTRATION NUMBER F-2408

ENGINEERING AND ENVIRONMENTAL CONSULTANTS
8100 CROSS PARK DRIVE
AUSTIN, TEXAS 78754

STATE OF TEXAS
SHANT HARUTUNIAN
87735
REGISTERED
PROFESSIONAL ENGINEER
10/7/2019

DESIGNED BY:	HEI
CHECKED BY:	HEI
APPROVED BY:	HEI
SUBMITTAL DATE:	OCTOBER 2019
SCALE:	AS SHOWN

SOUTH AUSTIN REGIONAL WASTEWATER TREATMENT PLANT
ELECTRICAL SUBSTATION NO. 1 REPLACEMENT PROJECT
CIP I.D.# 3333.032

ELECTRICAL SUBSTATION NO. 2
UNDERGROUND DUCTBANK PLAN – RENOVATION

PROJECT NO: 2014-300 | SHT. 751 OF 866 | DWG NO. SUB2-E-068

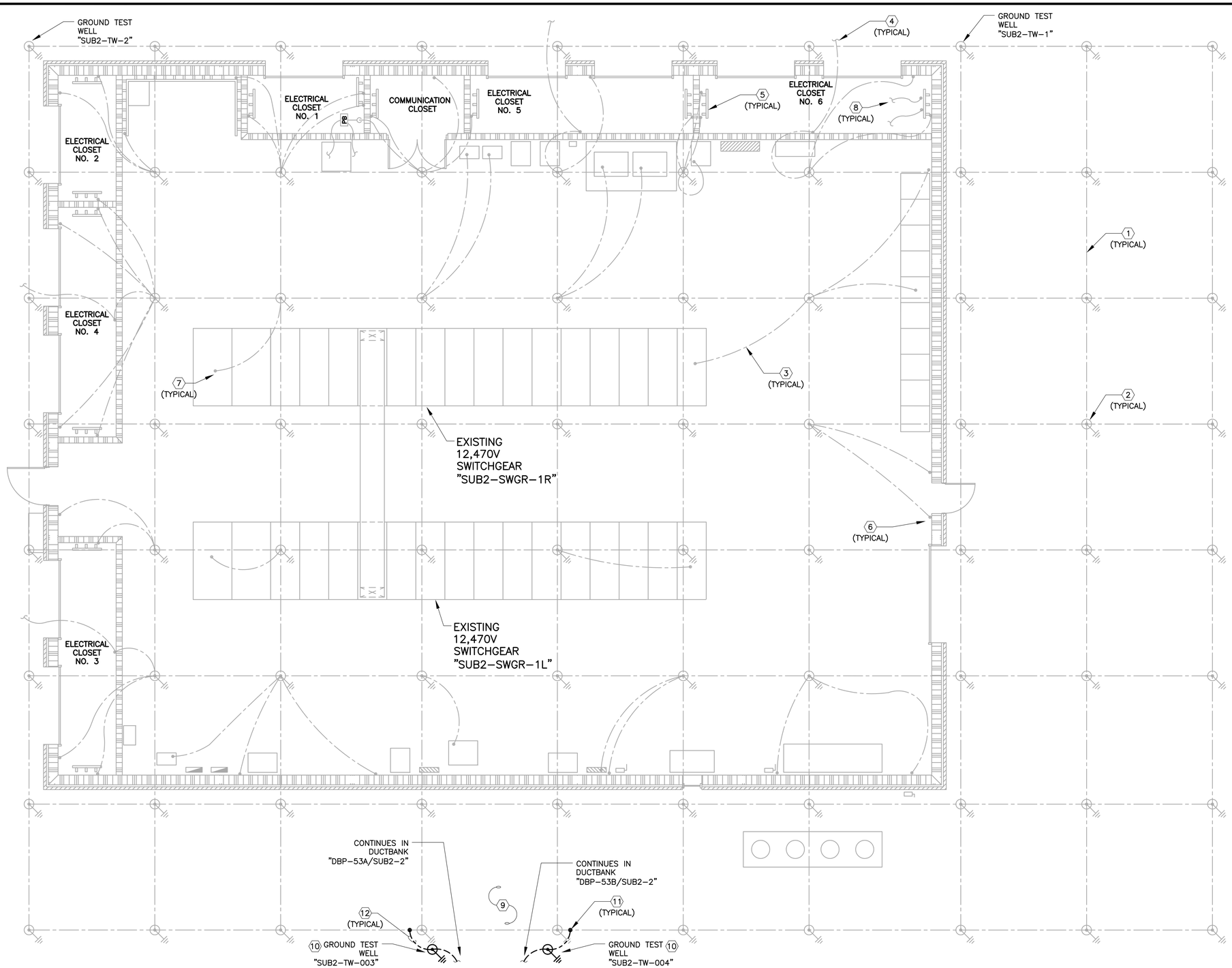

KEY NOTES:

1. EXISTING DIRECT BURIED BARE GROUNDING CONDUCTOR.
2. EXISTING GROUND ROD.
3. EXISTING GROUNDING ELECTRODE IN 1-1/2" PVC CONDUIT STUBS-UP IN TO SUBSTATION BUILDING.
4. EXISTING GROUNDING ELECTRODE IN 1-1/2" PVC CONDUIT CONTINUES IN UNDERGROUND DUCTBANK.
5. EXISTING GROUND BUS BAR.
6. EXISTING GROUNDING ELECTRODE BONDED TO BUILDING STRUCTURAL STEEL COLUMN.
7. EXISTING GROUNDING ELECTRODE TERMINATED TO EQUIPMENT GROUND BUS.
8. EXISTING GROUNDING ELECTRODE CONTINUES TO CABLE RACKS. ALTHOUGH ONLY SHOWN HERE, THIS IS TYPICAL FOR EACH CABLE CLOSET.
9. PROPOSED DUCTBANK ROUTED IN THIS AREA. TAKE CARE TO AVOID DAMAGING GROUNDING GRID. CONTRACTOR TO REPAIR ANY DAMAGE TO GROUNDING GRID TO EXISTING CONDITIONS AT NO ADDITIONAL COST TO THE OWNER. REFER TO DRAWING NO. [SUB2-E-068] FOR ADDITIONAL INFORMATION.
10. FURNISH AND INSTALL TEST WELL PER DETAILS ON DRAWING NO. [TD-E-011].
11. MAKE ALL CONNECTIONS TO GROUNDING ELECTRODES AND EXISTING GROUNDING GRID BY MEANS OF EXOTHERMIC WELD EXCEPT WHERE SHOWN OTHERWISE.
12. 1 - 250kCMIL BARE GROUNDING CONDUCTOR DIRECT BURIED AT MINIMAL DEPTH OF 30 INCHES BELOW FINISHED GRADE.

N
PLANT NORTH

SUBSTATION NO. 2
SCALE: 3/16" = 1'

BAR LENGTH ON ORIGINAL DRAWING EQUALS ONE INCH, ADJUST SCALE ACCORDINGLY.

REUSE OF DOCUMENTS

This document, and the designs incorporated herein, is an instrument of professional service that has been developed, designed and prepared by Harutunian Engineering, Inc., and is not to be used, in whole or in part, for any other project without giving written notice to Harutunian Engineering, Inc.

NO.	DATE:	DESCRIPTION

HARUTUNIAN ENGINEERING INCORPORATED
TEXAS FIRM REGISTRATION NUMBER F-2408
ENGINEERING AND ENVIRONMENTAL CONSULTANTS
8100 CROSS PARK DRIVE
AUSTIN, TEXAS 78754

STATE OF TEXAS
SHANT HARUTUNIAN
87735
REGISTERED
PROFESSIONAL ENGINEER
10/7/2019

DESIGNED BY:	HEI
CHECKED BY:	HEI
APPROVED BY:	HEI
SUBMITTAL DATE:	OCTOBER 2019
SCALE:	AS SHOWN

SOUTH AUSTIN REGIONAL WASTEWATER TREATMENT PLANT
ELECTRICAL SUBSTATION NO. 1 REPLACEMENT PROJECT
CIP I.D.# 3333.032

ELECTRICAL SUBSTATION NO. 2
GROUNDING PLAN - RENOVATION

PROJECT NO: 2014-300 | SHT. 752 OF 866 | DWG NO. SUB2-E-069

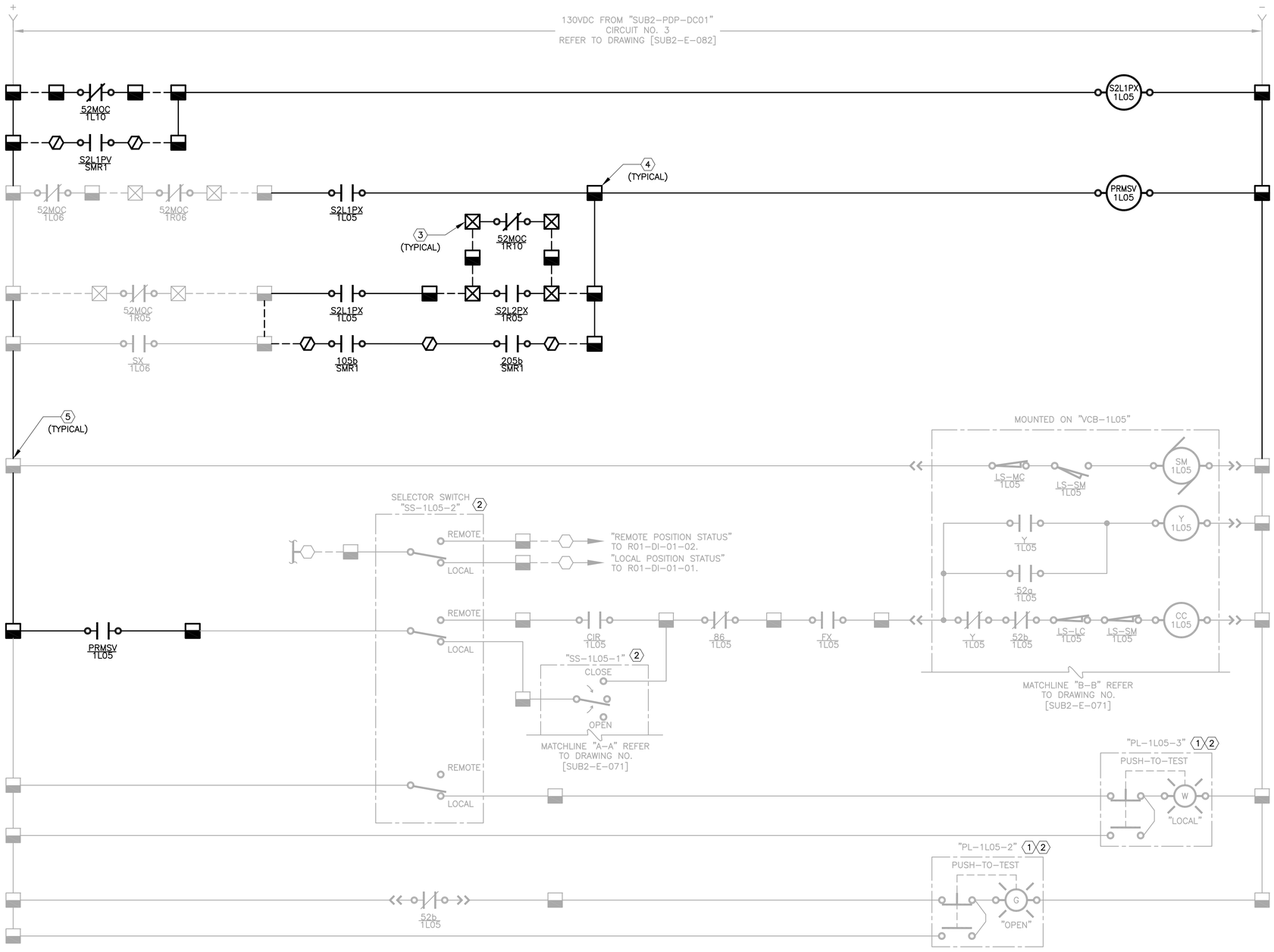

CONTROL LOGIC DEVICE LEGEND:

52a	BREAKER MOUNTED AUXILIARY CONTACT – OPEN WHEN BREAKER IS OPEN
52b	BREAKER MOUNTED AUXILIARY CONTACT – CLOSED WHEN BREAKER IS OPEN
52MOC	MECHANISM OPERATED CELL SWITCH – OPERATES AS AUXILIARY CONTACT WHEN BREAKER IS IN CONNECTED OR TEST POSITION
LS–MC	SPRING MOTOR CUTOFF SWITCH – OPEN WHEN BREAKER IS RACKED OUT
LS–SM	SPRING MOTOR LIMIT SWITCH – SHOWN WITH SPRINGS CHARGED – CHANGES STATES WHEN SPRING IS DISCHARGED
LS–LC	LATCH CHECK SWITCH – OPENS WHEN TRIP LATCH MOVES OUT OF ITS NORMAL POSITION
SM	SPRING CHARGING MOTOR
Y	ANTI–PUMP RELAY – PREVENTS ENERGIZATION OF CLOSE COIL WHEN ENERGIZED
CC	BREAKER CLOSE COIL – CLOSES BREAKER WHEN ENERGIZED
TC	BREAKER TRIP COIL – OPENS BREAKER WHEN ENERGIZED
86	PROTECTIVE RELAY TRIP LOCKOUT RELAY – MANUAL RESET
FX	PROTECTIVE RELAY FAILURE AUXILIARY RELAY – ENERGIZED WHEN PROTECTIVE RELAY STATUS IS OK
XX	PROTECTIVE RELAY XFER AUXILIARY RELAY
TOC	TRUCK OPERATED CONTACT – CONTACTS SHOWN WITH BREAKER RACKED OUT
SX	SYNC ENABLE AUXILIARY RELAY

S2L1PX SUBSTATION MANAGEMENT RELAY PERMISSIVE OUTPUT AUXILIARY RELAY

S2L2PX SUBSTATION MANAGEMENT RELAY PERMISSIVE OUTPUT AUXILIARY RELAY

PRMSV BREAKER CLOSE PERMISSIVE AUXILIARY RELAY

KEY NOTES:

1. INDICATING PILOT LIGHT WITH INTEGRAL MOMENTARY ACTION "PUSH–TO–TEST" PUSH BUTTON.
2. MOUNTED ON FRONT OF PROPOSED SWITCHGEAR "SUB2–SWGR–1L" SECTION 1L05A.
3. FURNISH AND INSTALL TERMINAL BLOCKS IN SWITCHGEAR "SUB2–SWGR–1L".
4. FURNISH AND INSTALL TERMINAL BLOCKS IN SWITCHGEAR "SUB2–SWGR–1R".
5. TERMINATE PROPOSED WIRE TO EXISTING TERMINAL BLOCKS.

GENERAL NOTES:

1. CONTRACTOR SHALL FURNISH EXISTING SWITCHGEAR MANUFACTURER'S SERVICES TO FURNISH ALL MATERIAL AND LABOR TO MODIFY ALL THE EXISTING MECHANISM OPERATED CIRCUIT BREAKER AUXILIARY CONTACTS (MOC) SWITCHES SHOWN ON THIS SHEET SUCH THAT THE MOC SWITCHES SHALL REFLECT TRUE CIRCUIT BREAKER OPEN AND CLOSE STATUS POSITIONS AND SHALL OPERATE BOTH WHEN THE CIRCUIT BREAKER IS RACKED IN AS WELL AS WHEN THE CIRCUIT BREAKER IS RACKED OUT IN THE TEST POSITION. ALL MOC SWITCHES SHALL REFLECT CIRCUIT BREAKER OPEN STATUS WHEN THE CIRCUIT BREAKER IS RACKED OUT AND NOT IN TEST POSITION.

BAR LENGTH ON ORIGINAL DRAWING EQUALS ONE INCH, ADJUST SCALE ACCORDINGLY.

REUSE OF DOCUMENTS

This document, and the designs incorporated herein, is an instrument of professional service that has been developed, designed and prepared by Harutunian Engineering, Inc., and is not to be used, in whole or in part, for any other project without giving written notice to Harutunian Engineering, Inc.

NO.	DATE:	DESCRIPTION

HARUTUNIAN ENGINEERING INCORPORATED

TEXAS FIRM REGISTRATION NUMBER F–2408

ENGINEERING AND ENVIRONMENTAL CONSULTANTS
8100 CROSS PARK DRIVE
AUSTIN, TEXAS 78754

STATE OF TEXAS
SHANT HARUTUNIAN
87735
REGISTERED
PROFESSIONAL ENGINEER
10/7/2019

DESIGNED BY:	HEI
CHECKED BY:	HEI
APPROVED BY:	HEI
SUBMITTAL DATE:	OCTOBER 2019
SCALE:	AS SHOWN

SOUTH AUSTIN REGIONAL WASTEWATER TREATMENT PLANT
ELECTRICAL SUBSTATION NO. 1 REPLACEMENT PROJECT
CIP I.D.# 3333.032

ELECTRICAL SUBSTATION NO. 2
SUB2–SWGR–1L MAIN BREAKER "VCB–1L05" CONTROL LOGIC – RENOVATION (SHEET 1 OF 2)

PROJECT NO: 2014–300 | SHT. 753 OF 866 | DWG NO. SUB2–E–070

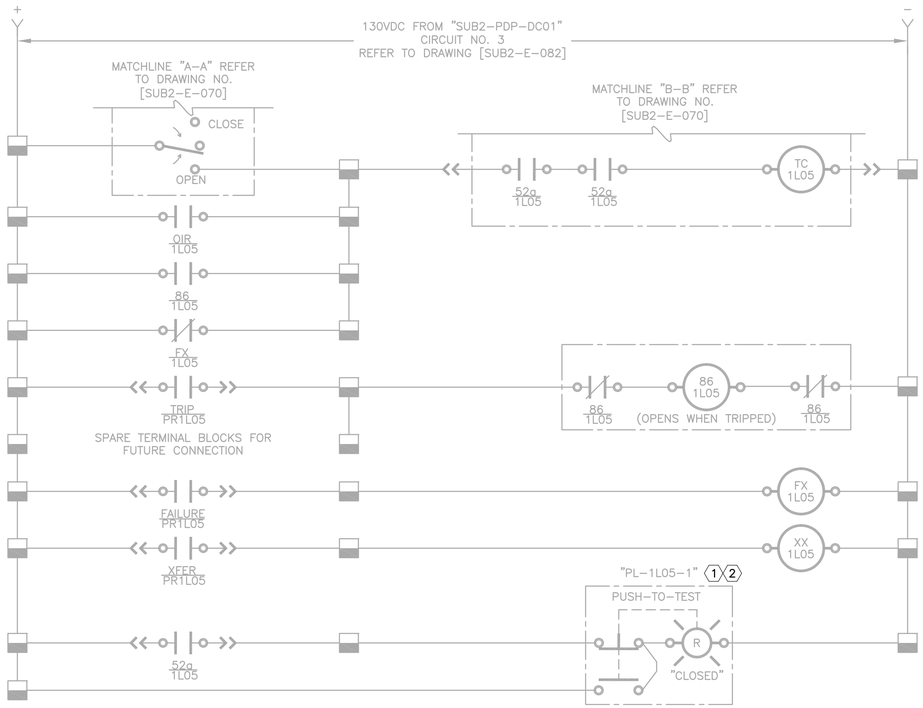

CONTROL LOGIC DEVICE LEGEND:

52a	BREAKER MOUNTED AUXILIARY CONTACT – OPEN WHEN BREAKER IS OPEN
52b	BREAKER MOUNTED AUXILIARY CONTACT – CLOSED WHEN BREAKER IS OPEN
52MOC	MECHANISM OPERATED CELL SWITCH – OPERATES AS AUXILIARY CONTACT WHEN BREAKER IS IN CONNECTED OR TEST POSITION
LS–MC	SPRING MOTOR CUTOFF SWITCH – OPEN WHEN BREAKER IS RACKED OUT
LS–SM	SPRING MOTOR LIMIT SWITCH – SHOWN WITH SPRINGS CHARGED – CHANGES STATES WHEN SPRING IS DISCHARGED
LS–LC	LATCH CHECK SWITCH – OPENS WHEN TRIP LATCH MOVES OUT OF ITS NORMAL POSITION
SM	SPRING CHARGING MOTOR
Y	ANTI–PUMP RELAY – PREVENTS ENERGIZATION OF CLOSE COIL WHEN ENERGIZED
CC	BREAKER CLOSE COIL – CLOSES BREAKER WHEN ENERGIZED
TC	BREAKER TRIP COIL – OPENS BREAKER WHEN ENERGIZED
86	PROTECTIVE RELAY TRIP LOCKOUT RELAY – MANUAL RESET
FX	PROTECTIVE RELAY FAILURE AUXILIARY RELAY – ENERGIZED WHEN PROTECTIVE RELAY STATUS IS OK
XX	PROTECTIVE RELAY XFER AUXILIARY RELAY
TOC	TRUCK OPERATED CONTACT – CONTACTS SHOWN WITH BREAKER RACKED OUT
SX	SYNC ENABLE AUXILIARY RELAY
S2L1PX	SUBSTATION MANAGEMENT RELAY PERMISSIVE OUTPUT AUXILIARY RELAY
S2L2PX	SUBSTATION MANAGEMENT RELAY PERMISSIVE OUTPUT AUXILIARY RELAY
PRMSV	BREAKER CLOSE PERMISSIVE AUXILIARY RELAY

KEY NOTES:

1. INDICATING PILOT LIGHT WITH INTEGRAL MOMENTARY ACTION "PUSH–TO–TEST" PUSH BUTTON.
2. MOUNTED ON FRONT OF PROPOSED SWITCHGEAR "SUB2–SWGR–1L" SECTION 1L05A.
3. FURNISH AND INSTALL TERMINAL BLOCKS IN SWITCHGEAR "SUB2–SWGR–1L".
4. TERMINATE PROPOSED WIRE TO EXISTING TERMINAL BLOCKS.

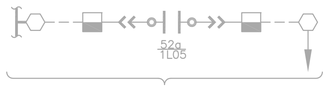

"BREAKER CLOSED" STATUS TO R01–DI–01–03.

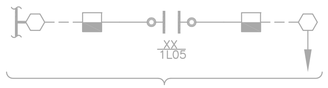

"TRANSFER"
STATUS TO R01–DI–01–07.

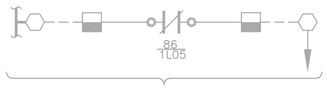

"LOCKOUT" STATUS TO R01–DI–01–05.

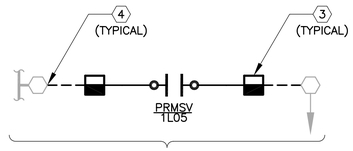

"BREAKER CLOSE PERMISSIVE" AUXILIARY RELAY
STATUS TO PLC "SUB2–PLC–001".
REFER TO DRAWING NO. [SUB2–E–083].

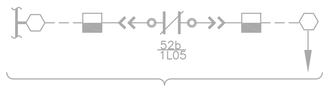

"BREAKER OPEN" STATUS TO R01–DI–01–04.

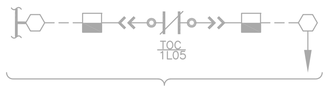

"BREAKER TRUCK POSITION"
STATUS TO R01–DI–01–08.

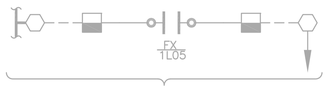

"PROTECTIVE RELAY FAILURE"
STATUS TO R01–DI–01–06.

BAR LENGTH ON ORIGINAL DRAWING EQUALS ONE INCH, ADJUST SCALE ACCORDINGLY.

REUSE OF DOCUMENTS

This document, and the designs incorporated herein, is an instrument of professional service that has been developed, designed and prepared by Harutunian Engineering, Inc., and is not to be used, in whole or in part, for any other project without giving written notice to Harutunian Engineering, Inc.

NO.	DATE:	DESCRIPTION

HARUTUNIAN ENGINEERING INCORPORATED
TEXAS FIRM REGISTRATION NUMBER F–2408
ENGINEERING AND ENVIRONMENTAL CONSULTANTS
8100 CROSS PARK DRIVE
AUSTIN, TEXAS 78754

STATE OF TEXAS
SHANT HARUTUNIAN
87735
REGISTERED
PROFESSIONAL ENGINEER
10/7/2019

DESIGNED BY:	HEI
CHECKED BY:	HEI
APPROVED BY:	HEI
SUBMITTAL DATE:	OCTOBER 2019
SCALE:	AS SHOWN

SOUTH AUSTIN REGIONAL WASTEWATER TREATMENT PLANT
ELECTRICAL SUBSTATION NO. 1 REPLACEMENT PROJECT
CIP I.D.# 3333.032

ELECTRICAL SUBSTATION NO. 2
SUB2–SWGR–01L MAIN BREAKER "VCB–1L05"
CONTROL LOGIC – RENOVATION (SHEET 2 OF 2)

PROJECT NO: 2014–300 | SHT. 754 OF 866 | DWG NO. SUB2–E–071

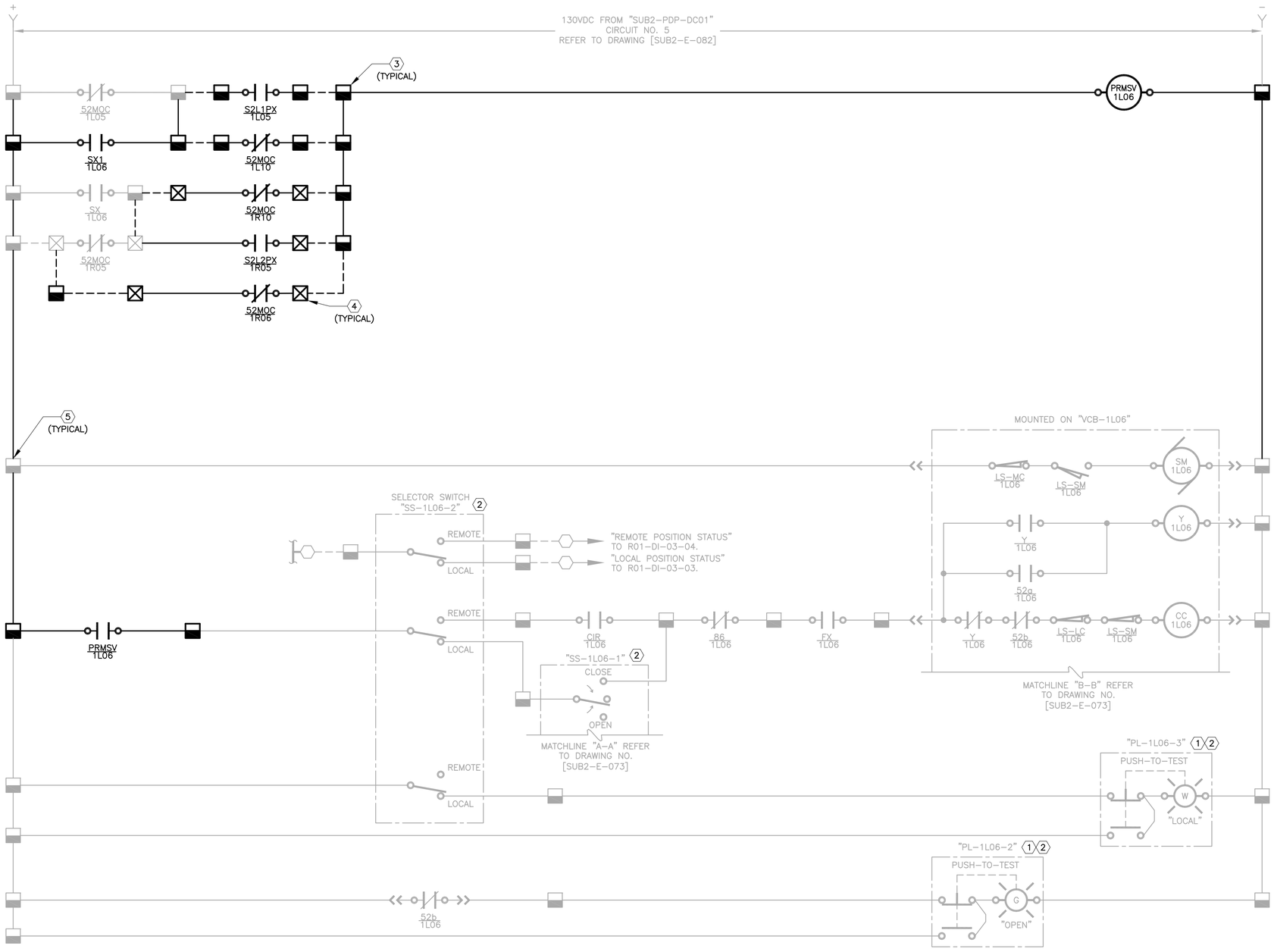

CONTROL LOGIC DEVICE LEGEND:

52a	BREAKER MOUNTED AUXILIARY CONTACT – OPEN WHEN BREAKER IS OPEN
52b	BREAKER MOUNTED AUXILIARY CONTACT – CLOSED WHEN BREAKER IS OPEN
52MOC	MECHANISM OPERATED CELL SWITCH – OPERATES AS AUXILIARY CONTACT WHEN BREAKER IS IN CONNECTED OR TEST POSITION
LS–MC	SPRING MOTOR CUTOFF SWITCH – OPEN WHEN BREAKER IS RACKED OUT
LS–SM	SPRING MOTOR LIMIT SWITCH – SHOWN WITH SPRINGS CHARGED – CHANGES STATES WHEN SPRING IS DISCHARGED
LS–LC	LATCH CHECK SWITCH – OPENS WHEN TRIP LATCH MOVES OUT OF ITS NORMAL POSITION
SM	SPRING CHARGING MOTOR
Y	ANTI–PUMP RELAY – PREVENTS ENERGIZATION OF CLOSE COIL WHEN ENERGIZED
CC	BREAKER CLOSE COIL – CLOSES BREAKER WHEN ENERGIZED
TC	BREAKER TRIP COIL – OPENS BREAKER WHEN ENERGIZED
86	PROTECTIVE RELAY TRIP LOCKOUT RELAY – MANUAL RESET
FX	PROTECTIVE RELAY FAILURE AUXILIARY RELAY – ENERGIZED WHEN PROTECTIVE RELAY STATUS IS OK
XX	PROTECTIVE RELAY XFER AUXILIARY RELAY
TOC	TRUCK OPERATED CONTACT – CONTACTS SHOWN WITH BREAKER RACKED OUT
SX	SYNC ENABLE AUXILIARY RELAY

S2L1PX SUBSTATION MANAGEMENT RELAY PERMISSIVE OUTPUT AUXILIARY RELAY

S2L2PX SUBSTATION MANAGEMENT RELAY PERMISSIVE OUTPUT AUXILIARY RELAY

PRMSV BREAKER CLOSE PERMISSIVE AUXILIARY RELAY

KEY NOTES:

1. INDICATING PILOT LIGHT WITH INTEGRAL MOMENTARY ACTION "PUSH–TO–TEST" PUSH BUTTON.
2. MOUNTED ON FRONT OF PROPOSED SWITCHGEAR "SUB2–SWGR–1L" SECTION 1L06A.
3. FURNISH AND INSTALL TERMINAL BLOCKS IN SWITCHGEAR "SUB2–SWGR–1L".
4. FURNISH AND INSTALL TERMINAL BLOCKS IN SWITCHGEAR "SUB2–SWGR–1R".
5. TERMINATE PROPOSED WIRE TO EXISTING TERMINAL BLOCKS.

GENERAL NOTES:

1. CONTRACTOR SHALL FURNISH EXISTING SWITCHGEAR MANUFACTURER'S SERVICES TO FURNISH ALL MATERIAL AND LABOR TO MODIFY ALL THE EXISTING MECHANISM OPERATED CIRCUIT BREAKER AUXILIARY CONTACTS (MOC) SWITCHES SHOWN ON THIS SHEET SUCH THAT THE MOC SWITCHES SHALL REFLECT TRUE CIRCUIT BREAKER OPEN AND CLOSE STATUS POSITIONS AND SHALL OPERATE BOTH WHEN THE CIRCUIT BREAKER IS RACKED IN AS WELL AS WHEN THE CIRCUIT BREAKER IS RACKED OUT IN THE TEST POSITION. ALL MOC SWITCHES SHALL REFLECT CIRCUIT BREAKER OPEN STATUS WHEN THE CIRCUIT BREAKER IS RACKED OUT AND NOT IN TEST POSITION.

BAR LENGTH ON ORIGINAL DRAWING EQUALS ONE INCH, ADJUST SCALE ACCORDINGLY.

REUSE OF DOCUMENTS

This document, and the designs incorporated herein, is an instrument of professional service that has been developed, designed and prepared by Harutunian Engineering, Inc., and is not to be used, in whole or in part, for any other project without giving written notice to Harutunian Engineering, Inc.

NO.	DATE:	DESCRIPTION

HARUTUNIAN ENGINEERING INCORPORATED

TEXAS FIRM REGISTRATION NUMBER F–2408

ENGINEERING AND ENVIRONMENTAL CONSULTANTS
8100 CROSS PARK DRIVE
AUSTIN, TEXAS 78754

STATE OF TEXAS
SHANT HARUTUNIAN
87735
REGISTERED
PROFESSIONAL ENGINEER
10/7/2019

DESIGNED BY:	HEI
CHECKED BY:	HEI
APPROVED BY:	HEI
SUBMITTAL DATE:	OCTOBER 2019
SCALE:	AS SHOWN

SOUTH AUSTIN REGIONAL WASTEWATER TREATMENT PLANT
ELECTRICAL SUBSTATION NO. 1 REPLACEMENT PROJECT
CIP I.D.# 3333.032

ELECTRICAL SUBSTATION NO. 2
SUB2–SWGR–1L TIE BREAKER "VCB–1L06"
CONTROL LOGIC – RENOVATION (SHEET 1 OF 2)

PROJECT NO: 2014–300 | SHT. 755 OF 866 | DWG NO. SUB2–E–072

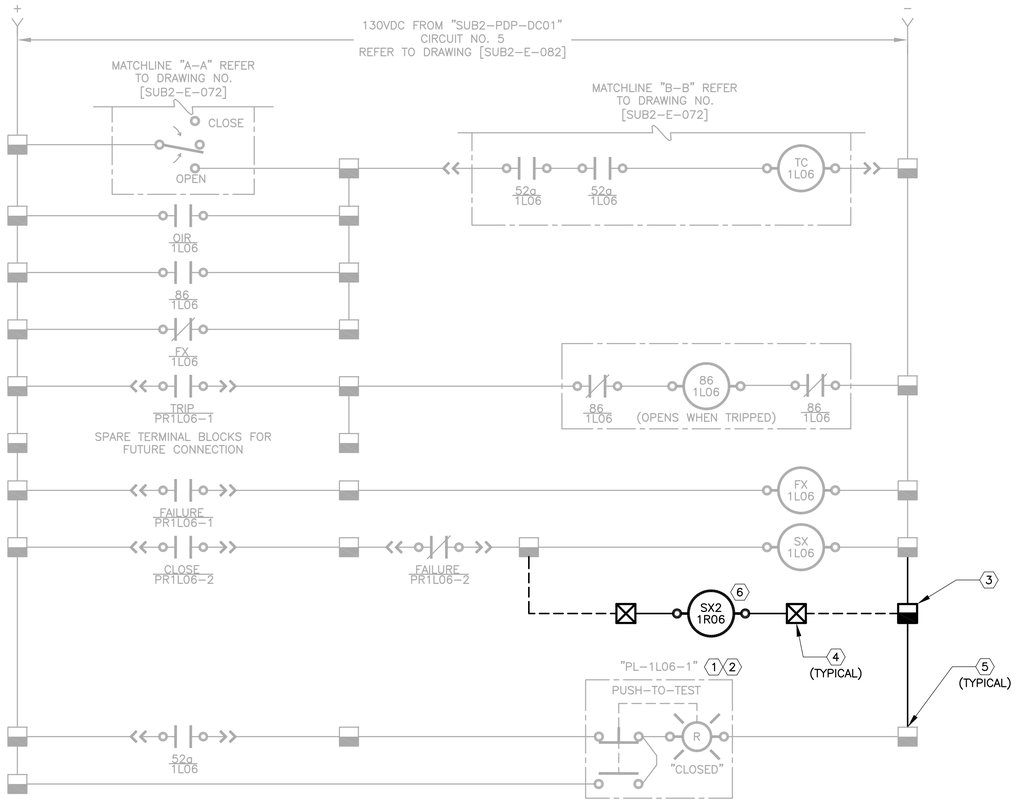

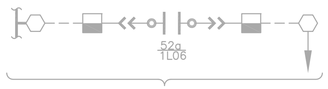

"BREAKER CLOSED" STATUS TO R01-DI-03-05.

"SYNC CHECK RELAY" STATUS TO R01-DI-03-09.

"LOCKOUT" STATUS TO R01-DI-03-07.

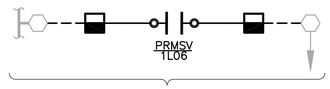

"BREAKER CLOSE PERMISSIVE" AUXILIARY RELAY STATUS TO PLC "SUB2-PLC-001". REFER TO DRAWING NO. [SUB2-E-083].

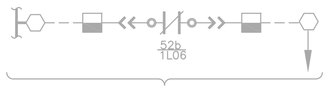

"BREAKER OPEN" STATUS TO R01-DI-03-06.

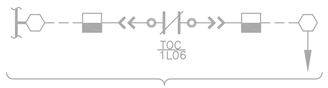

"BREAKER TRUCK POSITION" STATUS TO R01-DI-03-10.

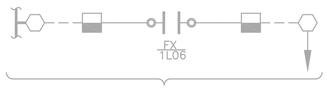

"PROTECTIVE RELAY FAILURE" STATUS TO R01-DI-03-08.

CONTROL LOGIC DEVICE LEGEND:

52a	BREAKER MOUNTED AUXILIARY CONTACT – OPEN WHEN BREAKER IS OPEN
52b	BREAKER MOUNTED AUXILIARY CONTACT – CLOSED WHEN BREAKER IS OPEN
52MOC	MECHANISM OPERATED CELL SWITCH – OPERATES AS AUXILIARY CONTACT WHEN BREAKER IS IN CONNECTED OR TEST POSITION
LS-MC	SPRING MOTOR CUTOFF SWITCH – OPEN WHEN BREAKER IS RACKED OUT
LS-SM	SPRING MOTOR LIMIT SWITCH – SHOWN WITH SPRINGS CHARGED – CHANGES STATES WHEN SPRING IS DISCHARGED
LS-LC	LATCH CHECK SWITCH – OPENS WHEN TRIP LATCH MOVES OUT OF ITS NORMAL POSITION
SM	SPRING CHARGING MOTOR
Y	ANTI-PUMP RELAY – PREVENTS ENERGIZATION OF CLOSE COIL WHEN ENERGIZED
CC	BREAKER CLOSE COIL – CLOSES BREAKER WHEN ENERGIZED
TC	BREAKER TRIP COIL – OPENS BREAKER WHEN ENERGIZED
86	PROTECTIVE RELAY TRIP LOCKOUT RELAY – MANUAL RESET
FX	PROTECTIVE RELAY FAILURE AUXILIARY RELAY – ENERGIZED WHEN PROTECTIVE RELAY STATUS IS OK
XX	PROTECTIVE RELAY XFER AUXILIARY RELAY
TOC	TRUCK OPERATED CONTACT – CONTACTS SHOWN WITH BREAKER RACKED OUT
SX	SYNC ENABLE AUXILIARY RELAY
S2L1PX	SUBSTATION MANAGEMENT RELAY PERMISSIVE OUTPUT AUXILIARY RELAY
S2L2PX	SUBSTATION MANAGEMENT RELAY PERMISSIVE OUTPUT AUXILIARY RELAY
PRMSV	BREAKER CLOSE PERMISSIVE AUXILIARY RELAY

KEY NOTES:

1. INDICATING PILOT LIGHT WITH INTEGRAL MOMENTARY ACTION "PUSH-TO-TEST" PUSH BUTTON.
2. MOUNTED ON FRONT OF PROPOSED SWITCHGEAR "SUB2-SWGR-1L" SECTION 1L06A.
3. FURNISH AND INSTALL TERMINAL BLOCKS IN SWITCHGEAR "SUB2-SWGR-1L".
4. FURNISH AND INSTALL TERMINAL BLOCKS IN SWITCHGEAR "SUB2-SWGR-1R".
5. TERMINATE PROPOSED WIRE TO EXISTING TERMINAL BLOCKS.
6. LOCATE CONTROL RELAY IN SWITCHGEAR "SUB1-SWGR-1R" SECTION NO. 6.

BAR LENGTH ON ORIGINAL DRAWING EQUALS ONE INCH, ADJUST SCALE ACCORDINGLY.

REUSE OF DOCUMENTS

This document, and the designs incorporated herein, is an instrument of professional service that has been developed, designed and prepared by Harutunian Engineering, Inc., and is not to be used, in whole or in part, for any other project without giving written notice to Harutunian Engineering, Inc.

NO.	DATE:	DESCRIPTION

HARUTUNIAN ENGINEERING INCORPORATED

TEXAS FIRM REGISTRATION NUMBER F-2408

ENGINEERING AND ENVIRONMENTAL CONSULTANTS
8100 CROSS PARK DRIVE
AUSTIN, TEXAS 78754

STATE OF TEXAS
SHANT HARUTUNIAN
87735
REGISTERED
PROFESSIONAL ENGINEER
10/7/2019

DESIGNED BY:	HEI
CHECKED BY:	HEI
APPROVED BY:	HEI
SUBMITTAL DATE:	OCTOBER 2019
SCALE:	AS SHOWN

SOUTH AUSTIN REGIONAL WASTEWATER TREATMENT PLANT
ELECTRICAL SUBSTATION NO. 1 REPLACEMENT PROJECT
CIP I.D.# 3333.032

ELECTRICAL SUBSTATION NO. 2
SUB2-SWGR-1L TIE BREAKER "VCB-1L06"
CONTROL LOGIC – RENOVATION (SHEET 2 OF 2)

PROJECT NO: 2014-300 | SHT. 756 OF 866 | DWG NO. SUB2-E-073

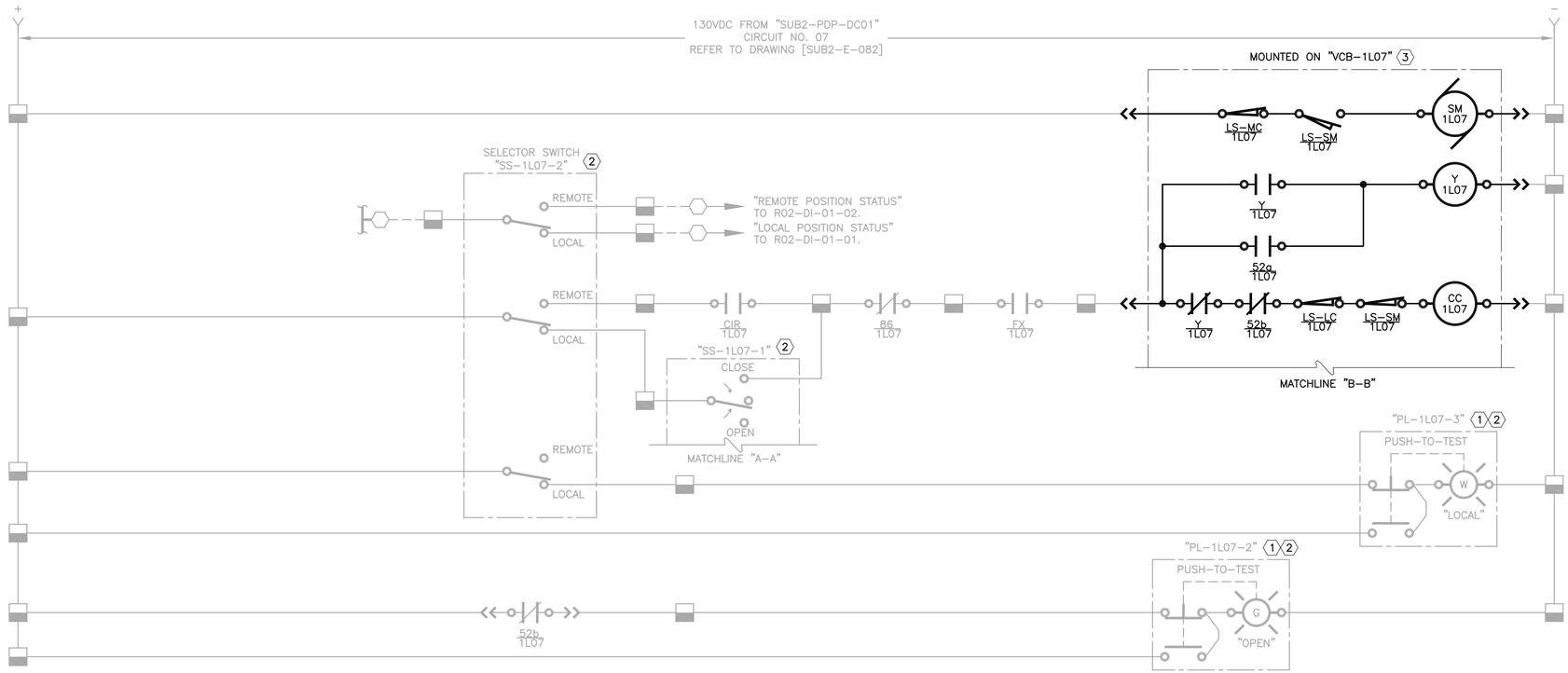

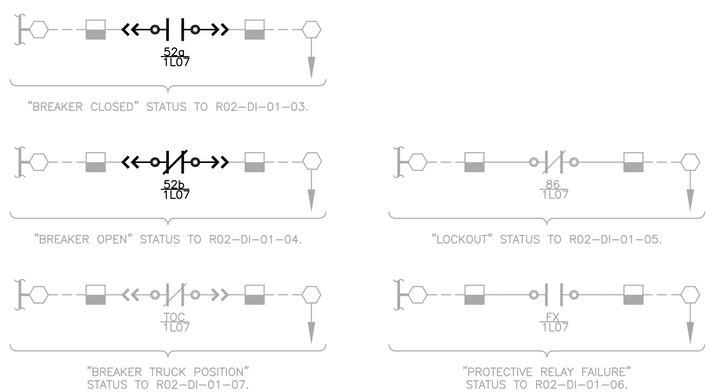

CONTROL LOGIC DEVICE LEGEND:

52a	BREAKER MOUNTED AUXILIARY CONTACT – OPEN WHEN BREAKER IS OPEN
52b	BREAKER MOUNTED AUXILIARY CONTACT – CLOSED WHEN BREAKER IS OPEN
52MOC	MECHANISM OPERATED CELL SWITCH – OPERATES AS AUXILIARY CONTACT WHEN BREAKER IS IN CONNECTED OR TEST POSITION
LS-MC	SPRING MOTOR CUTOFF SWITCH – OPEN WHEN BREAKER IS RACKED OUT
LS-SM	SPRING MOTOR LIMIT SWITCH – SHOWN WITH SPRINGS CHARGED – CHANGES STATES WHEN SPRING IS DISCHARGED
LS-LC	LATCH CHECK SWITCH – OPENS WHEN TRIP LATCH MOVES OUT OF ITS NORMAL POSITION
SM	SPRING CHARGING MOTOR
Y	ANTI-PUMP RELAY – PREVENTS ENERGIZATION OF CLOSE COIL WHEN ENERGIZED
CC	BREAKER CLOSE COIL – CLOSES BREAKER WHEN ENERGIZED
TC	BREAKER TRIP COIL – OPENS BREAKER WHEN ENERGIZED
86	PROTECTIVE RELAY TRIP LOCKOUT RELAY – MANUAL RESET
FX	PROTECTIVE RELAY FAILURE AUXILIARY RELAY – ENERGIZED WHEN PROTECTIVE RELAY STATUS IS OK
XX	PROTECTIVE RELAY XFER AUXILIARY RELAY
TOC	TRUCK OPERATED CONTACT – CONTACTS SHOWN WITH BREAKER RACKED OUT
SX	SYNC ENABLE AUXILIARY RELAY
S2L1PX	SUBSTATION MANAGEMENT RELAY PERMISSIVE OUTPUT AUXILIARY RELAY
S2L2PX	SUBSTATION MANAGEMENT RELAY PERMISSIVE OUTPUT AUXILIARY RELAY
PRMSV	BREAKER CLOSE PERMISSIVE AUXILIARY RELAY

KEY NOTES:

1. INDICATING PILOT LIGHT WITH INTEGRAL MOMENTARY ACTION "PUSH-TO-TEST" PUSH BUTTON.
2. MOUNTED ON FRONT OF PROPOSED SWITCHGEAR "SUB2-SWGR-1L" SECTION 1L07A.
3. PROPOSED MEDIUM VOLTAGE CIRCUIT BREAKER TO BE INSTALLED IN SECTION 7. REFER TO ONE-LINE DIAGRAMS FOR ADDITIONAL INFORMATION.

BAR LENGTH ON ORIGINAL DRAWING EQUALS ONE INCH, ADJUST SCALE ACCORDINGLY.

REUSE OF DOCUMENTS

This document, and the designs incorporated herein, is an instrument of professional service that has been developed, designed and prepared by Harutunian Engineering, Inc., and is not to be used, in whole or in part, for any other project without giving written notice to Harutunian Engineering, Inc.

NO.	DATE:	DESCRIPTION

HARUTUNIAN ENGINEERING INCORPORATED
TEXAS FIRM REGISTRATION NUMBER F-2408
ENGINEERING AND ENVIRONMENTAL CONSULTANTS
8100 CROSS PARK DRIVE
AUSTIN, TEXAS 78754

STATE OF TEXAS
SHANT HARUTUNIAN
87735
REGISTERED
PROFESSIONAL ENGINEER
10/7/2019

DESIGNED BY:	HEI
CHECKED BY:	HEI
APPROVED BY:	HEI
SUBMITTAL DATE:	OCTOBER 2019
SCALE:	AS SHOWN

SOUTH AUSTIN REGIONAL WASTEWATER TREATMENT PLANT
ELECTRICAL SUBSTATION NO. 1 REPLACEMENT PROJECT
CIP I.D.# 3333.032

ELECTRICAL SUBSTATION NO. 2
SUB2-SWGR-1L FEEDER BREAKER "VCB-1L07"
CONTROL LOGIC – RENOVATION

PROJECT NO: 2014-300 | SHT. 757 OF 866 | DWG NO. SUB2-E-074

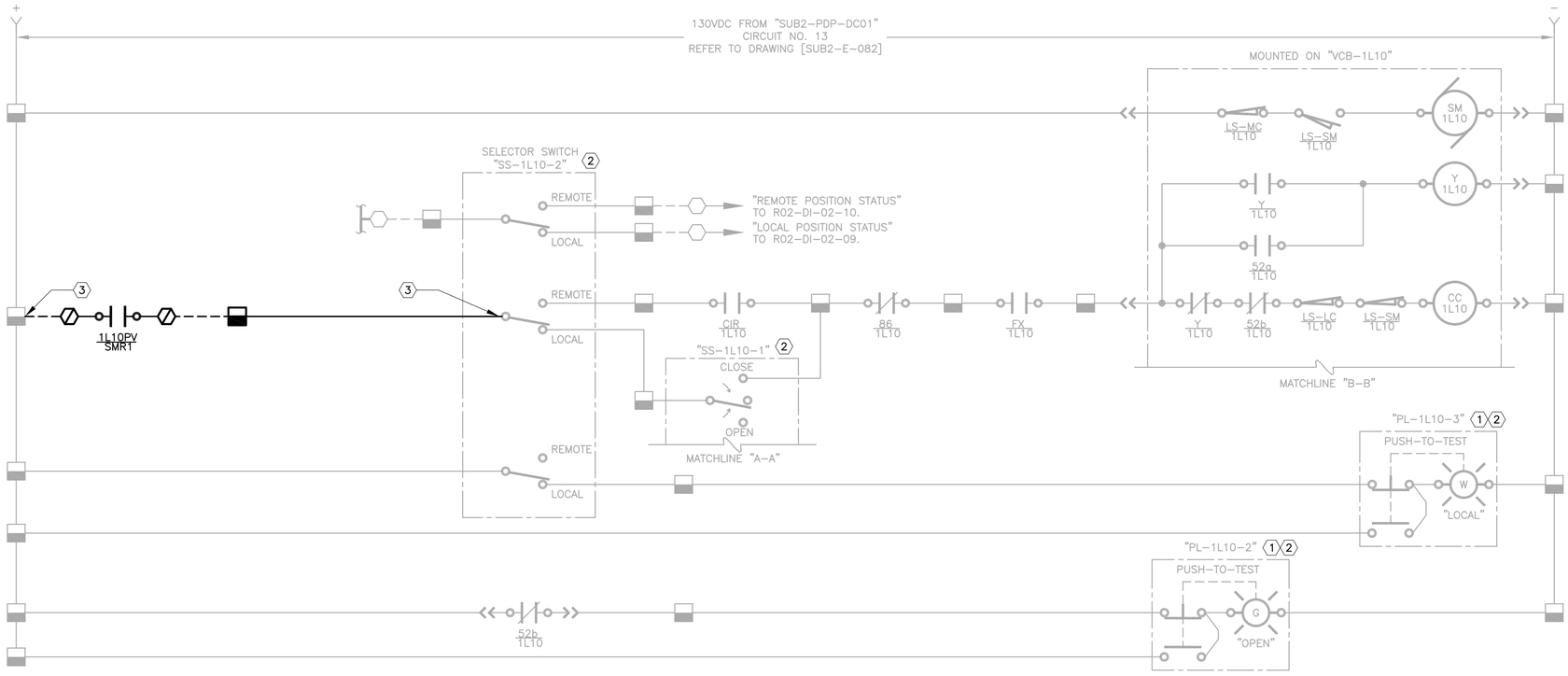

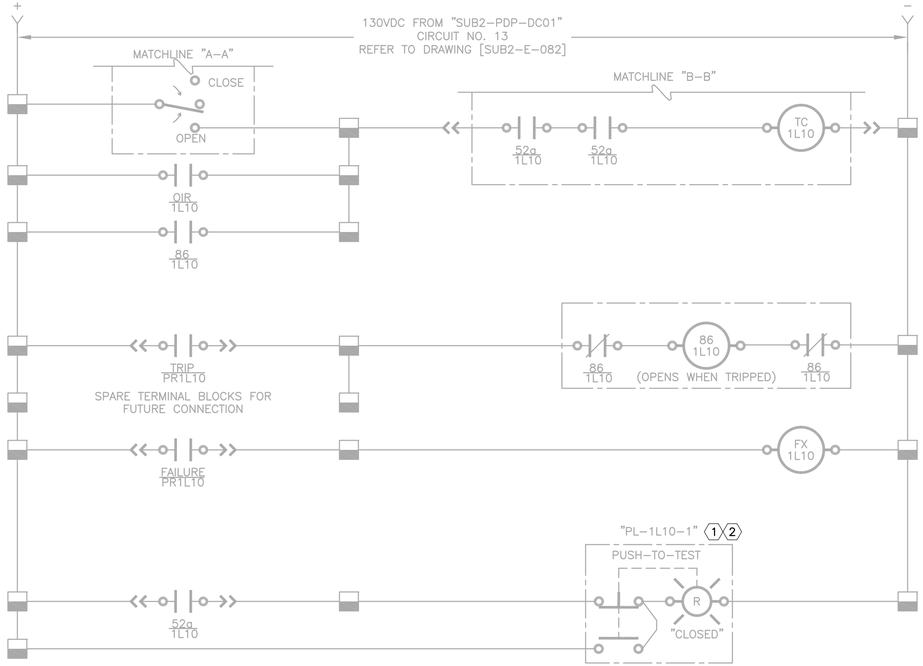

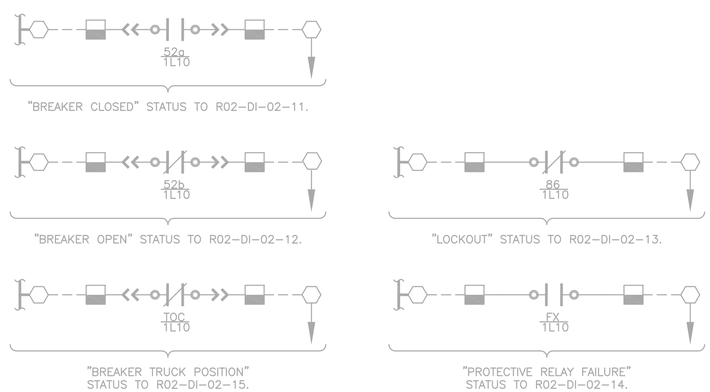

CONTROL LOGIC DEVICE LEGEND:

52a	BREAKER MOUNTED AUXILIARY CONTACT – OPEN WHEN BREAKER IS OPEN
52b	BREAKER MOUNTED AUXILIARY CONTACT – CLOSED WHEN BREAKER IS OPEN
52MOC	MECHANISM OPERATED CELL SWITCH – OPERATES AS AUXILIARY CONTACT WHEN BREAKER IS IN CONNECTED OR TEST POSITION
LS-MC	SPRING MOTOR CUTOFF SWITCH – OPEN WHEN BREAKER IS RACKED OUT
LS-SM	SPRING MOTOR LIMIT SWITCH – SHOWN WITH SPRINGS CHARGED – CHANGES STATES WHEN SPRING IS DISCHARGED
LS-LC	LATCH CHECK SWITCH – OPENS WHEN TRIP LATCH MOVES OUT OF ITS NORMAL POSITION
SM	SPRING CHARGING MOTOR
Y	ANTI-PUMP RELAY – PREVENTS ENERGIZATION OF CLOSE COIL WHEN ENERGIZED
CC	BREAKER CLOSE COIL – CLOSES BREAKER WHEN ENERGIZED
TC	BREAKER TRIP COIL – OPENS BREAKER WHEN ENERGIZED
86	PROTECTIVE RELAY TRIP LOCKOUT RELAY – MANUAL RESET
FX	PROTECTIVE RELAY FAILURE AUXILIARY RELAY – ENERGIZED WHEN PROTECTIVE RELAY STATUS IS OK
XX	PROTECTIVE RELAY XFER AUXILIARY RELAY
TOC	TRUCK OPERATED CONTACT – CONTACTS SHOWN WITH BREAKER RACKED OUT
SX	SYNC ENABLE AUXILIARY RELAY
S2L1PX	SUBSTATION MANAGEMENT RELAY PERMISSIVE OUTPUT AUXILIARY RELAY
S2L2PX	SUBSTATION MANAGEMENT RELAY PERMISSIVE OUTPUT AUXILIARY RELAY
PRMSV	BREAKER CLOSE PERMISSIVE AUXILIARY RELAY

KEY NOTES:

1. INDICATING PILOT LIGHT WITH INTEGRAL MOMENTARY ACTION "PUSH-TO-TEST" PUSH BUTTON.
2. MOUNTED ON FRONT OF PROPOSED SWITCHGEAR "SUB2-SWGR-1L" SECTION 1L10A.
3. TERMINATE PROPOSED WIRE TO EXISTING CONTROL DEVICE.

BAR LENGTH ON ORIGINAL DRAWING EQUALS ONE INCH, ADJUST SCALE ACCORDINGLY.

REUSE OF DOCUMENTS

This document, and the designs incorporated herein, is an instrument of professional service that has been developed, designed and prepared by Harutunian Engineering, Inc., and is not to be used, in whole or in part, for any other project without giving written notice to Harutunian Engineering, Inc.

NO.	DATE:	DESCRIPTION

HARUTUNIAN ENGINEERING INCORPORATED
TEXAS FIRM REGISTRATION NUMBER F-2408
ENGINEERING AND ENVIRONMENTAL CONSULTANTS
8100 CROSS PARK DRIVE
AUSTIN, TEXAS 78754

STATE OF TEXAS
SHANT HARUTUNIAN
87735
REGISTERED
PROFESSIONAL ENGINEER
10/7/2019

DESIGNED BY:	HEI
CHECKED BY:	HEI
APPROVED BY:	HEI
SUBMITTAL DATE:	OCTOBER 2019
SCALE:	AS SHOWN

SOUTH AUSTIN REGIONAL WASTEWATER TREATMENT PLANT
ELECTRICAL SUBSTATION NO. 1 REPLACEMENT PROJECT
CIP I.D.# 3333.032

ELECTRICAL SUBSTATION NO. 2
SUB2-SWGR-1L FEEDER BREAKER "VCB-1L10"
CONTROL LOGIC – RENOVATION

PROJECT NO: 2014-300 | SHT. 758 OF 866 | DWG NO. SUB2-E-075

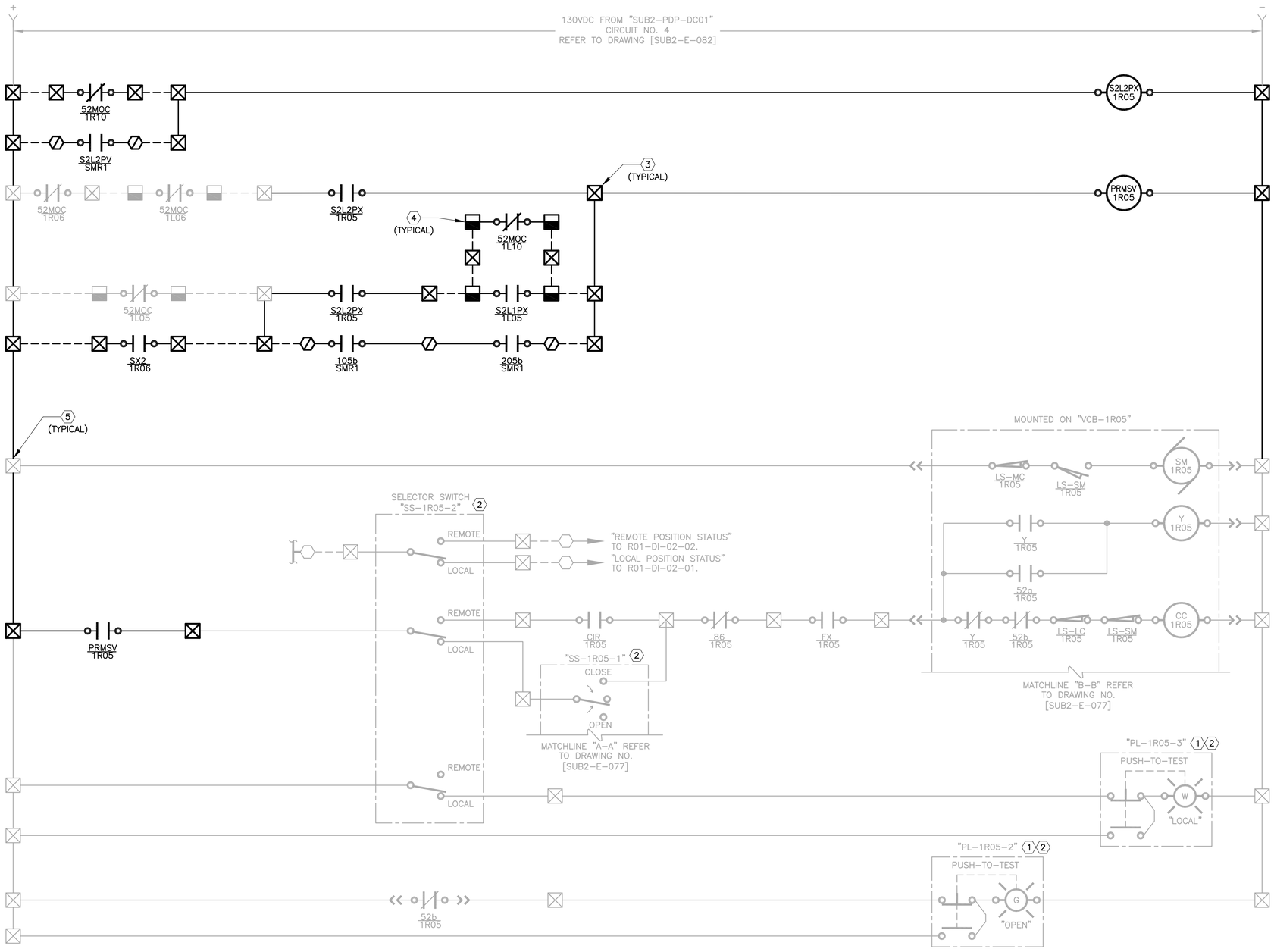

CONTROL LOGIC DEVICE LEGEND:

52a	BREAKER MOUNTED AUXILIARY CONTACT – OPEN WHEN BREAKER IS OPEN
52b	BREAKER MOUNTED AUXILIARY CONTACT – CLOSED WHEN BREAKER IS OPEN
52MOC	MECHANISM OPERATED CELL SWITCH – OPERATES AS AUXILIARY CONTACT WHEN BREAKER IS IN CONNECTED OR TEST POSITION
LS–MC	SPRING MOTOR CUTOFF SWITCH – OPEN WHEN BREAKER IS RACKED OUT
LS–SM	SPRING MOTOR LIMIT SWITCH – SHOWN WITH SPRINGS CHARGED – CHANGES STATES WHEN SPRING IS DISCHARGED
LS–LC	LATCH CHECK SWITCH – OPENS WHEN TRIP LATCH MOVES OUT OF ITS NORMAL POSITION
SM	SPRING CHARGING MOTOR
Y	ANTI–PUMP RELAY – PREVENTS ENERGIZATION OF CLOSE COIL WHEN ENERGIZED
CC	BREAKER CLOSE COIL – CLOSES BREAKER WHEN ENERGIZED
TC	BREAKER TRIP COIL – OPENS BREAKER WHEN ENERGIZED
86	PROTECTIVE RELAY TRIP LOCKOUT RELAY – MANUAL RESET
FX	PROTECTIVE RELAY FAILURE AUXILIARY RELAY – ENERGIZED WHEN PROTECTIVE RELAY STATUS IS OK
XX	PROTECTIVE RELAY XFER AUXILIARY RELAY
TOC	TRUCK OPERATED CONTACT – CONTACTS SHOWN WITH BREAKER RACKED OUT
SX	SYNC ENABLE AUXILIARY RELAY

S2L1PX SUBSTATION MANAGEMENT RELAY PERMISSIVE OUTPUT AUXILIARY RELAY

S2L2PX SUBSTATION MANAGEMENT RELAY PERMISSIVE OUTPUT AUXILIARY RELAY

PRMSV BREAKER CLOSE PERMISSIVE AUXILIARY RELAY

KEY NOTES:

1. INDICATING PILOT LIGHT WITH INTEGRAL MOMENTARY ACTION "PUSH–TO–TEST" PUSH BUTTON.
2. MOUNTED ON FRONT OF PROPOSED SWITCHGEAR "SUB2–SWGR–1L" SECTION 1R05A.
3. FURNISH AND INSTALL TERMINAL BLOCKS IN SWITCHGEAR "SUB2–SWGR–1L".
4. FURNISH AND INSTALL TERMINAL BLOCKS IN SWITCHGEAR "SUB2–SWGR–1R".
5. TERMINATE PROPOSED WIRE TO EXISTING TERMINAL BLOCKS.

GENERAL NOTES:

1. CONTRACTOR SHALL FURNISH EXISTING SWITCHGEAR MANUFACTURER'S SERVICES TO FURNISH ALL MATERIAL AND LABOR TO MODIFY ALL THE EXISTING MECHANISM OPERATED CIRCUIT BREAKER AUXILIARY CONTACTS (MOC) SWITCHES SHOWN ON THIS SHEET SUCH THAT THE MOC SWITCHES SHALL REFLECT TRUE CIRCUIT BREAKER OPEN AND CLOSE STATUS POSITIONS AND SHALL OPERATE BOTH WHEN THE CIRCUIT BREAKER IS RACKED IN AS WELL AS WHEN THE CIRCUIT BREAKER IS RACKED OUT IN THE TEST POSITION. ALL MOC SWITCHES SHALL REFLECT CIRCUIT BREAKER OPEN STATUS WHEN THE CIRCUIT BREAKER IS RACKED OUT AND NOT IN TEST POSITION.

BAR LENGTH ON ORIGINAL DRAWING EQUALS ONE INCH, ADJUST SCALE ACCORDINGLY.

REUSE OF DOCUMENTS

This document, and the designs incorporated herein, is an instrument of professional service that has been developed, designed and prepared by Harutunian Engineering, Inc., and is not to be used, in whole or in part, for any other project without giving written notice to Harutunian Engineering, Inc.

NO.	DATE:	DESCRIPTION

HARUTUNIAN ENGINEERING INCORPORATED

TEXAS FIRM REGISTRATION NUMBER F–2408

ENGINEERING AND ENVIRONMENTAL CONSULTANTS
8100 CROSS PARK DRIVE
AUSTIN, TEXAS 78754

STATE OF TEXAS
SHANT HARUTUNIAN
87735
REGISTERED
PROFESSIONAL ENGINEER
10/7/2019

DESIGNED BY:	HEI
CHECKED BY:	HEI
APPROVED BY:	HEI
SUBMITTAL DATE:	OCTOBER 2019
SCALE:	AS SHOWN

SOUTH AUSTIN REGIONAL WASTEWATER TREATMENT PLANT
ELECTRICAL SUBSTATION NO. 1 REPLACEMENT PROJECT
CIP I.D.# 3333.032

ELECTRICAL SUBSTATION NO. 2
SUB2–SWGR–1R MAIN BREAKER "VCB–1R05"
CONTROL LOGIC – RENOVATION (SHEET 1 OF 2)

PROJECT NO: 2014–300 | SHT. 759 OF 866 | DWG NO. SUB2–E–076

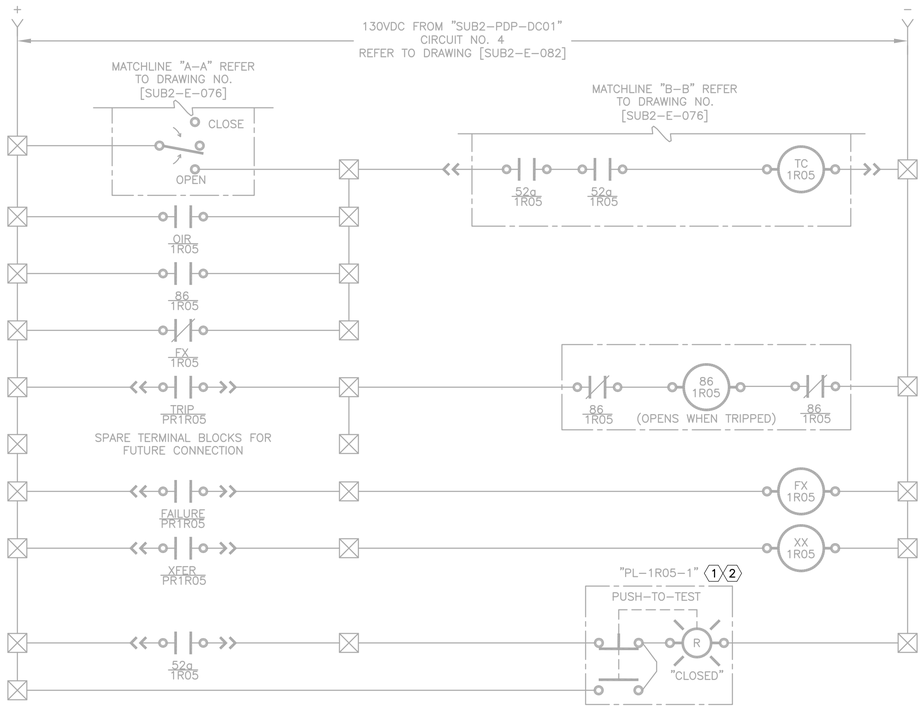

CONTROL LOGIC DEVICE LEGEND:

52a	BREAKER MOUNTED AUXILIARY CONTACT – OPEN WHEN BREAKER IS OPEN
52b	BREAKER MOUNTED AUXILIARY CONTACT – CLOSED WHEN BREAKER IS OPEN
52MOC	MECHANISM OPERATED CELL SWITCH – OPERATES AS AUXILIARY CONTACT WHEN BREAKER IS IN CONNECTED OR TEST POSITION
LS–MC	SPRING MOTOR CUTOFF SWITCH – OPEN WHEN BREAKER IS RACKED OUT
LS–SM	SPRING MOTOR LIMIT SWITCH – SHOWN WITH SPRINGS CHARGED – CHANGES STATES WHEN SPRING IS DISCHARGED
LS–LC	LATCH CHECK SWITCH – OPENS WHEN TRIP LATCH MOVES OUT OF ITS NORMAL POSITION
SM	SPRING CHARGING MOTOR
Y	ANTI–PUMP RELAY – PREVENTS ENERGIZATION OF CLOSE COIL WHEN ENERGIZED
CC	BREAKER CLOSE COIL – CLOSES BREAKER WHEN ENERGIZED
TC	BREAKER TRIP COIL – OPENS BREAKER WHEN ENERGIZED
86	PROTECTIVE RELAY TRIP LOCKOUT RELAY – MANUAL RESET
FX	PROTECTIVE RELAY FAILURE AUXILIARY RELAY – ENERGIZED WHEN PROTECTIVE RELAY STATUS IS OK
XX	PROTECTIVE RELAY XFER AUXILIARY RELAY
TOC	TRUCK OPERATED CONTACT – CONTACTS SHOWN WITH BREAKER RACKED OUT
SX	SYNC ENABLE AUXILIARY RELAY
S2L1PX	SUBSTATION MANAGEMENT RELAY PERMISSIVE OUTPUT AUXILIARY RELAY
S2L2PX	SUBSTATION MANAGEMENT RELAY PERMISSIVE OUTPUT AUXILIARY RELAY
PRMSV	BREAKER CLOSE PERMISSIVE AUXILIARY RELAY

KEY NOTES:

1. INDICATING PILOT LIGHT WITH INTEGRAL MOMENTARY ACTION "PUSH–TO–TEST" PUSH BUTTON.
2. MOUNTED ON FRONT OF PROPOSED SWITCHGEAR "SUB2–SWGR–1L" SECTION 1R05A.
3. FURNISH AND INSTALL TERMINAL BLOCKS IN SWITCHGEAR "SUB2–SWGR–1R".
4. TERMINATE PROPOSED WIRE TO EXISTING TERMINAL BLOCKS.

"BREAKER CLOSED" STATUS TO R01–DI–02–03.

"TRANSFER"
STATUS TO R01–DI–02–07.

"LOCKOUT" STATUS TO R01–DI–02–05.

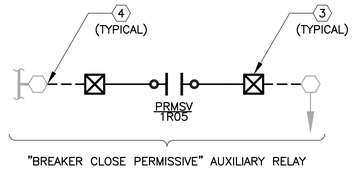

"BREAKER CLOSE PERMISSIVE" AUXILIARY RELAY
STATUS TO PLC "SUB2–PLC–001".
REFER TO DRAWING NO. [SUB2–E–083].

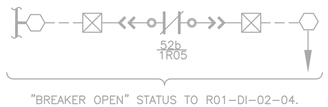

"BREAKER OPEN" STATUS TO R01–DI–02–04.

"BREAKER TRUCK POSITION"
STATUS TO R01–DI–02–08.

"PROTECTIVE RELAY FAILURE"
STATUS TO R01–DI–02–06.

BAR LENGTH ON ORIGINAL DRAWING EQUALS ONE INCH, ADJUST SCALE ACCORDINGLY.

REUSE OF DOCUMENTS

This document, and the designs incorporated herein, is an instrument of professional service that has been developed, designed and prepared by Harutunian Engineering, Inc., and is not to be used, in whole or in part, for any other project without giving written notice to Harutunian Engineering, Inc.

NO.	DATE:	DESCRIPTION

HARUTUNIAN ENGINEERING INCORPORATED
TEXAS FIRM REGISTRATION NUMBER F–2408
ENGINEERING AND ENVIRONMENTAL CONSULTANTS
8100 CROSS PARK DRIVE
AUSTIN, TEXAS 78754

STATE OF TEXAS
SHANT HARUTUNIAN
87735
REGISTERED
PROFESSIONAL ENGINEER
10/7/2019

DESIGNED BY:	HEI
CHECKED BY:	HEI
APPROVED BY:	HEI
SUBMITTAL DATE:	OCTOBER 2019
SCALE:	AS SHOWN

SOUTH AUSTIN REGIONAL WASTEWATER TREATMENT PLANT
ELECTRICAL SUBSTATION NO. 1 REPLACEMENT PROJECT
CIP I.D.# 3333.032

ELECTRICAL SUBSTATION NO. 2
SUB2–SWGR–1R MAIN BREAKER "VCB–1R05"
CONTROL LOGIC – RENOVATION (SHEET 2 OF 2)

PROJECT NO: 2014–300 | SHT. 760 OF 866 | DWG NO. SUB2–E–077

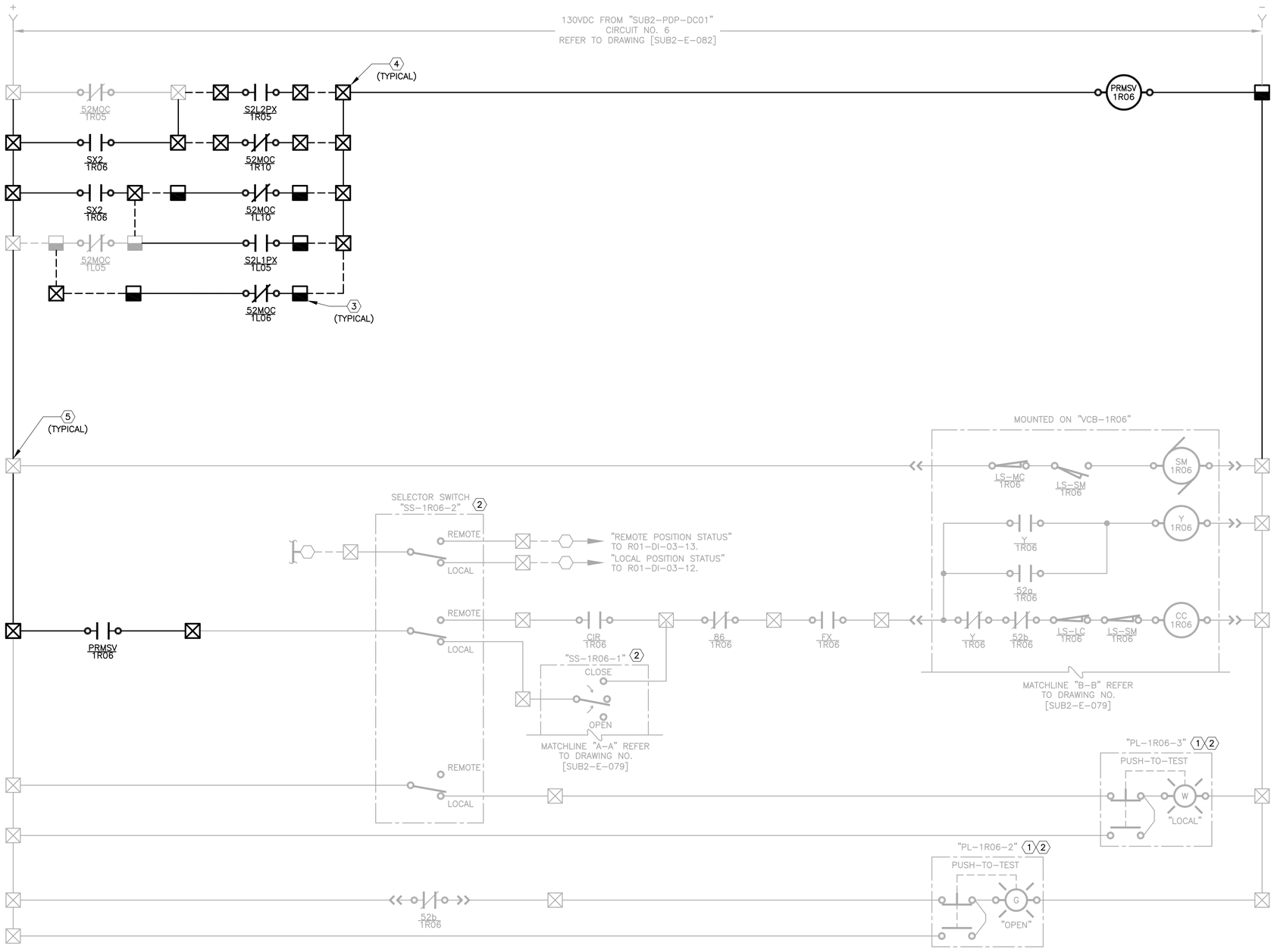

CONTROL LOGIC DEVICE LEGEND:

52a	BREAKER MOUNTED AUXILIARY CONTACT – OPEN WHEN BREAKER IS OPEN
52b	BREAKER MOUNTED AUXILIARY CONTACT – CLOSED WHEN BREAKER IS OPEN
52MOC	MECHANISM OPERATED CELL SWITCH – OPERATES AS AUXILIARY CONTACT WHEN BREAKER IS IN CONNECTED OR TEST POSITION
LS–MC	SPRING MOTOR CUTOFF SWITCH – OPEN WHEN BREAKER IS RACKED OUT
LS–SM	SPRING MOTOR LIMIT SWITCH – SHOWN WITH SPRINGS CHARGED – CHANGES STATES WHEN SPRING IS DISCHARGED
LS–LC	LATCH CHECK SWITCH – OPENS WHEN TRIP LATCH MOVES OUT OF ITS NORMAL POSITION
SM	SPRING CHARGING MOTOR
Y	ANTI–PUMP RELAY – PREVENTS ENERGIZATION OF CLOSE COIL WHEN ENERGIZED
CC	BREAKER CLOSE COIL – CLOSES BREAKER WHEN ENERGIZED
TC	BREAKER TRIP COIL – OPENS BREAKER WHEN ENERGIZED
86	PROTECTIVE RELAY TRIP LOCKOUT RELAY – MANUAL RESET
FX	PROTECTIVE RELAY FAILURE AUXILIARY RELAY – ENERGIZED WHEN PROTECTIVE RELAY STATUS IS OK
XX	PROTECTIVE RELAY XFER AUXILIARY RELAY
TOC	TRUCK OPERATED CONTACT – CONTACTS SHOWN WITH BREAKER RACKED OUT
SX	SYNC ENABLE AUXILIARY RELAY

S2L1PX SUBSTATION MANAGEMENT RELAY PERMISSIVE OUTPUT AUXILIARY RELAY

S2L2PX SUBSTATION MANAGEMENT RELAY PERMISSIVE OUTPUT AUXILIARY RELAY

PRMSV BREAKER CLOSE PERMISSIVE AUXILIARY RELAY

KEY NOTES:

1. INDICATING PILOT LIGHT WITH INTEGRAL MOMENTARY ACTION "PUSH–TO–TEST" PUSH BUTTON.
2. MOUNTED ON FRONT OF PROPOSED SWITCHGEAR "SUB2–SWGR–1R" SECTION 1R06A.
3. FURNISH AND INSTALL TERMINAL BLOCKS IN SWITCHGEAR "SUB2–SWGR–1L".
4. FURNISH AND INSTALL TERMINAL BLOCKS IN SWITCHGEAR "SUB2–SWGR–1R".
5. TERMINATE PROPOSED WIRE TO EXISTING TERMINAL BLOCKS.

GENERAL NOTES:

1. CONTRACTOR SHALL FURNISH EXISTING SWITCHGEAR MANUFACTURER'S SERVICES TO FURNISH ALL MATERIAL AND LABOR TO MODIFY ALL THE EXISTING MECHANISM OPERATED CIRCUIT BREAKER AUXILIARY CONTACTS (MOC) SWITCHES SHOWN ON THIS SHEET SUCH THAT THE MOC SWITCHES SHALL REFLECT TRUE CIRCUIT BREAKER OPEN AND CLOSE STATUS POSITIONS AND SHALL OPERATE BOTH WHEN THE CIRCUIT BREAKER IS RACKED IN AS WELL AS WHEN THE CIRCUIT BREAKER IS RACKED OUT IN THE TEST POSITION. ALL MOC SWITCHES SHALL REFLECT CIRCUIT BREAKER OPEN STATUS WHEN THE CIRCUIT BREAKER IS RACKED OUT AND NOT IN TEST POSITION.

BAR LENGTH ON ORIGINAL DRAWING EQUALS ONE INCH, ADJUST SCALE ACCORDINGLY.

REUSE OF DOCUMENTS

This document, and the designs incorporated herein, is an instrument of professional service that has been developed, designed and prepared by Harutunian Engineering, Inc., and is not to be used, in whole or in part, for any other project without giving written notice to Harutunian Engineering, Inc.

NO.	DATE:	DESCRIPTION

HARUTUNIAN ENGINEERING INCORPORATED

TEXAS FIRM REGISTRATION NUMBER F–2408

ENGINEERING AND ENVIRONMENTAL CONSULTANTS
8100 CROSS PARK DRIVE
AUSTIN, TEXAS 78754

STATE OF TEXAS
SHANT HARUTUNIAN
87735
REGISTERED
PROFESSIONAL ENGINEER
10/7/2019

DESIGNED BY:	HEI
CHECKED BY:	HEI
APPROVED BY:	HEI
SUBMITTAL DATE:	OCTOBER 2019
SCALE:	AS SHOWN

SOUTH AUSTIN REGIONAL WASTEWATER TREATMENT PLANT
ELECTRICAL SUBSTATION NO. 1 REPLACEMENT PROJECT
CIP I.D.# 3333.032

ELECTRICAL SUBSTATION NO. 2
SUB2–SWGR–1R TIE BREAKER "VCB–1R06"
CONTROL LOGIC – RENOVATION (SHEET 1 OF 2)

PROJECT NO: 2014–300 | SHT. 761 OF 866 | DWG NO. SUB2–E–078

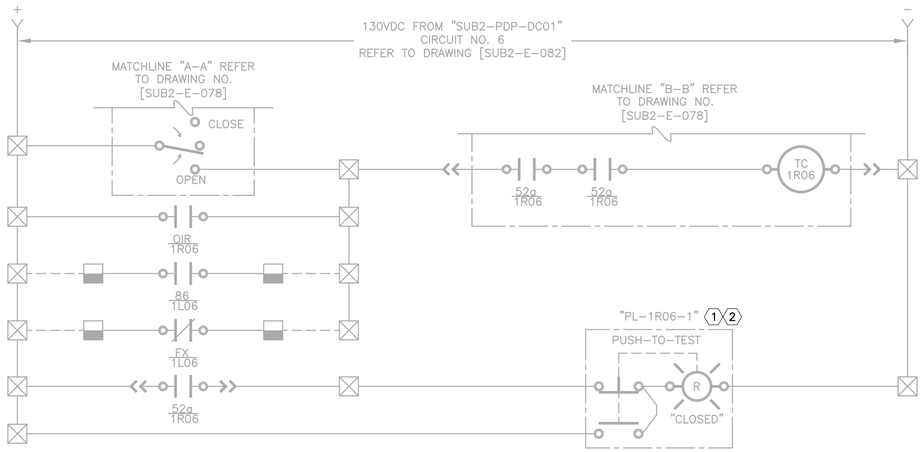

CONTROL LOGIC DEVICE LEGEND:

52a	BREAKER MOUNTED AUXILIARY CONTACT – OPEN WHEN BREAKER IS OPEN
52b	BREAKER MOUNTED AUXILIARY CONTACT – CLOSED WHEN BREAKER IS OPEN
52MOC	MECHANISM OPERATED CELL SWITCH – OPERATES AS AUXILIARY CONTACT WHEN BREAKER IS IN CONNECTED OR TEST POSITION
LS–MC	SPRING MOTOR CUTOFF SWITCH – OPEN WHEN BREAKER IS RACKED OUT
LS–SM	SPRING MOTOR LIMIT SWITCH – SHOWN WITH SPRINGS CHARGED – CHANGES STATES WHEN SPRING IS DISCHARGED
LS–LC	LATCH CHECK SWITCH – OPENS WHEN TRIP LATCH MOVES OUT OF ITS NORMAL POSITION
SM	SPRING CHARGING MOTOR
Y	ANTI–PUMP RELAY – PREVENTS ENERGIZATION OF CLOSE COIL WHEN ENERGIZED
CC	BREAKER CLOSE COIL – CLOSES BREAKER WHEN ENERGIZED
TC	BREAKER TRIP COIL – OPENS BREAKER WHEN ENERGIZED
86	PROTECTIVE RELAY TRIP LOCKOUT RELAY – MANUAL RESET
FX	PROTECTIVE RELAY FAILURE AUXILIARY RELAY – ENERGIZED WHEN PROTECTIVE RELAY STATUS IS OK
XX	PROTECTIVE RELAY XFER AUXILIARY RELAY
TOC	TRUCK OPERATED CONTACT – CONTACTS SHOWN WITH BREAKER RACKED OUT
SX	SYNC ENABLE AUXILIARY RELAY
S2L1PX	SUBSTATION MANAGEMENT RELAY PERMISSIVE OUTPUT AUXILIARY RELAY
S2L2PX	SUBSTATION MANAGEMENT RELAY PERMISSIVE OUTPUT AUXILIARY RELAY
PRMSV	BREAKER CLOSE PERMISSIVE AUXILIARY RELAY

KEY NOTES:

1. INDICATING PILOT LIGHT WITH INTEGRAL MOMENTARY ACTION "PUSH–TO–TEST" PUSH BUTTON.
2. MOUNTED ON FRONT OF PROPOSED SWITCHGEAR "SUB2–SWGR–1R" SECTION 1R06A.
3. FURNISH AND INSTALL TERMINAL BLOCKS IN SWITCHGEAR "SUB2–SWGR–1L".
4. TERMINATE PROPOSED WIRE TO EXISTING TERMINAL BLOCKS.

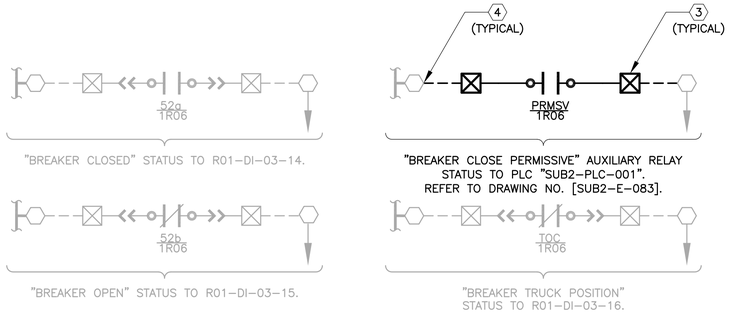

BAR LENGTH ON ORIGINAL DRAWING EQUALS ONE INCH, ADJUST SCALE ACCORDINGLY.

REUSE OF DOCUMENTS

This document, and the designs incorporated herein, is an instrument of professional service that has been developed, designed and prepared by Harutunian Engineering, Inc., and is not to be used, in whole or in part, for any other project without giving written notice to Harutunian Engineering, Inc.

NO.	DATE:	DESCRIPTION

HARUTUNIAN ENGINEERING INCORPORATED
TEXAS FIRM REGISTRATION NUMBER F–2408
ENGINEERING AND ENVIRONMENTAL CONSULTANTS
8100 CROSS PARK DRIVE
AUSTIN, TEXAS 78754

STATE OF TEXAS · SHANT HARUTUNIAN · 87735 · REGISTERED · PROFESSIONAL ENGINEER
10/7/2019

DESIGNED BY:	HEI
CHECKED BY:	HEI
APPROVED BY:	HEI
SUBMITTAL DATE:	OCTOBER 2019
SCALE:	AS SHOWN

SOUTH AUSTIN REGIONAL WASTEWATER TREATMENT PLANT
ELECTRICAL SUBSTATION NO. 1 REPLACEMENT PROJECT
CIP I.D.# 3333.032

ELECTRICAL SUBSTATION NO. 2
SUB2–SWGR–1R TIE BREAKER "VCB–1R06"
CONTROL LOGIC – RENOVATION (SHEET 2 OF 2)

PROJECT NO: 2014–300 | SHT. 762 OF 866 | DWG NO. SUB2–E–079

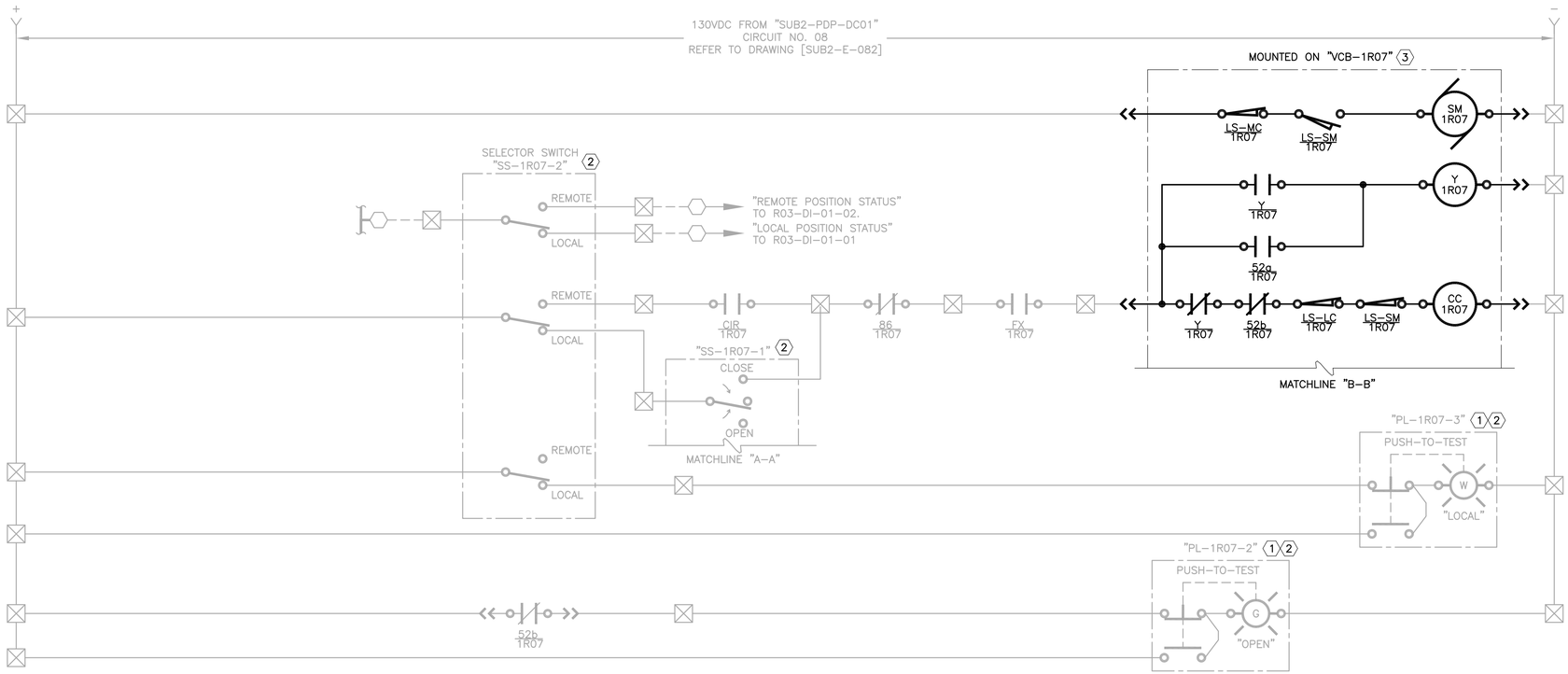

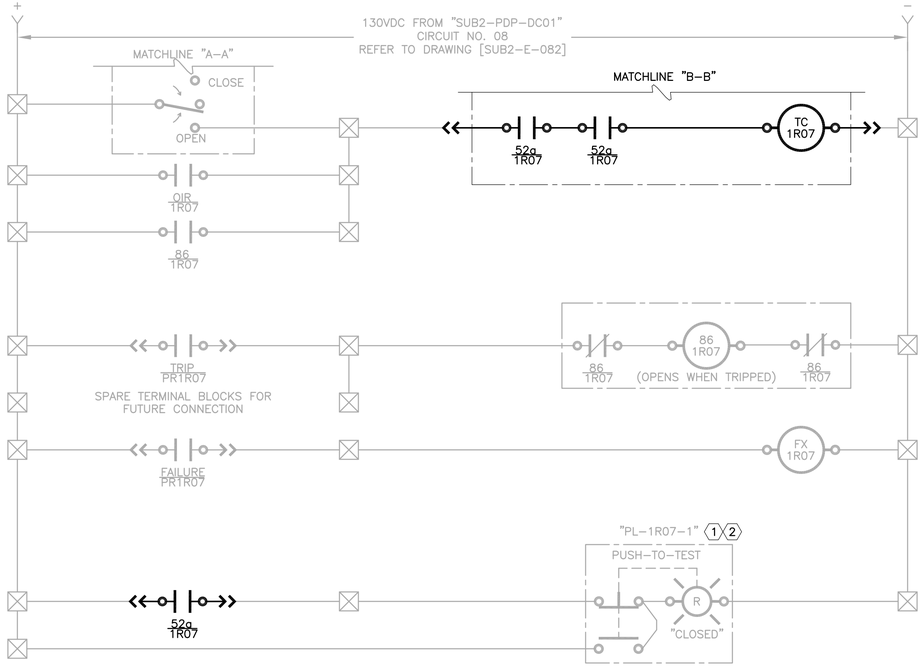

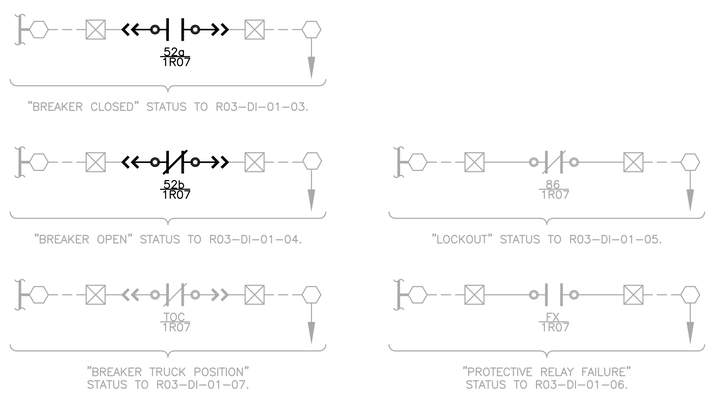

CONTROL LOGIC DEVICE LEGEND:

52a	BREAKER MOUNTED AUXILIARY CONTACT – OPEN WHEN BREAKER IS OPEN
52b	BREAKER MOUNTED AUXILIARY CONTACT – CLOSED WHEN BREAKER IS OPEN
52MOC	MECHANISM OPERATED CELL SWITCH – OPERATES AS AUXILIARY CONTACT WHEN BREAKER IS IN CONNECTED OR TEST POSITION
LS-MC	SPRING MOTOR CUTOFF SWITCH – OPEN WHEN BREAKER IS RACKED OUT
LS-SM	SPRING MOTOR LIMIT SWITCH – SHOWN WITH SPRINGS CHARGED – CHANGES STATES WHEN SPRING IS DISCHARGED
LS-LC	LATCH CHECK SWITCH – OPENS WHEN TRIP LATCH MOVES OUT OF ITS NORMAL POSITION
SM	SPRING CHARGING MOTOR
Y	ANTI-PUMP RELAY – PREVENTS ENERGIZATION OF CLOSE COIL WHEN ENERGIZED
CC	BREAKER CLOSE COIL – CLOSES BREAKER WHEN ENERGIZED
TC	BREAKER TRIP COIL – OPENS BREAKER WHEN ENERGIZED
86	PROTECTIVE RELAY TRIP LOCKOUT RELAY – MANUAL RESET
FX	PROTECTIVE RELAY FAILURE AUXILIARY RELAY – ENERGIZED WHEN PROTECTIVE RELAY STATUS IS OK
XX	PROTECTIVE RELAY XFER AUXILIARY RELAY
TOC	TRUCK OPERATED CONTACT – CONTACTS SHOWN WITH BREAKER RACKED OUT
SX	SYNC ENABLE AUXILIARY RELAY
S2L1PX	SUBSTATION MANAGEMENT RELAY PERMISSIVE OUTPUT AUXILIARY RELAY
S2L2PX	SUBSTATION MANAGEMENT RELAY PERMISSIVE OUTPUT AUXILIARY RELAY
PRMSV	BREAKER CLOSE PERMISSIVE AUXILIARY RELAY

KEY NOTES:

1. INDICATING PILOT LIGHT WITH INTEGRAL MOMENTARY ACTION "PUSH-TO-TEST" PUSH BUTTON.
2. MOUNTED ON FRONT OF PROPOSED SWITCHGEAR "SUB2-SWGR-1R" SECTION 1R07A.
3. PROPOSED MEDIUM VOLTAGE CIRCUIT BREAKER TO BE INSTALLED IN SECTION 7. REFER TO ONE-LINE DIAGRAMS FOR ADDITIONAL INFORMATION.

BAR LENGTH ON ORIGINAL DRAWING EQUALS ONE INCH, ADJUST SCALE ACCORDINGLY.

REUSE OF DOCUMENTS

This document, and the designs incorporated herein, is an instrument of professional service that has been developed, designed and prepared by Harutunian Engineering, Inc., and is not to be used, in whole or in part, for any other project without giving written notice to Harutunian Engineering, Inc.

NO.	DATE:	DESCRIPTION

HARUTUNIAN ENGINEERING INCORPORATED
TEXAS FIRM REGISTRATION NUMBER F-2408
ENGINEERING AND ENVIRONMENTAL CONSULTANTS
8100 CROSS PARK DRIVE
AUSTIN, TEXAS 78754

STATE OF TEXAS
SHANT HARUTUNIAN
87735
REGISTERED
PROFESSIONAL ENGINEER
10/7/2019

DESIGNED BY:	HEI
CHECKED BY:	HEI
APPROVED BY:	HEI
SUBMITTAL DATE:	OCTOBER 2019
SCALE:	AS SHOWN

SOUTH AUSTIN REGIONAL WASTEWATER TREATMENT PLANT
ELECTRICAL SUBSTATION NO. 1 REPLACEMENT PROJECT
CIP I.D.# 3333.032

ELECTRICAL SUBSTATION NO. 2
SUB2-SWGR-1R FEEDER BREAKER "VCB-1R07"
CONTROL LOGIC – RENOVATION

PROJECT NO: 2014-300 | SHT. 763 OF 866 | DWG NO. SUB2-E-080

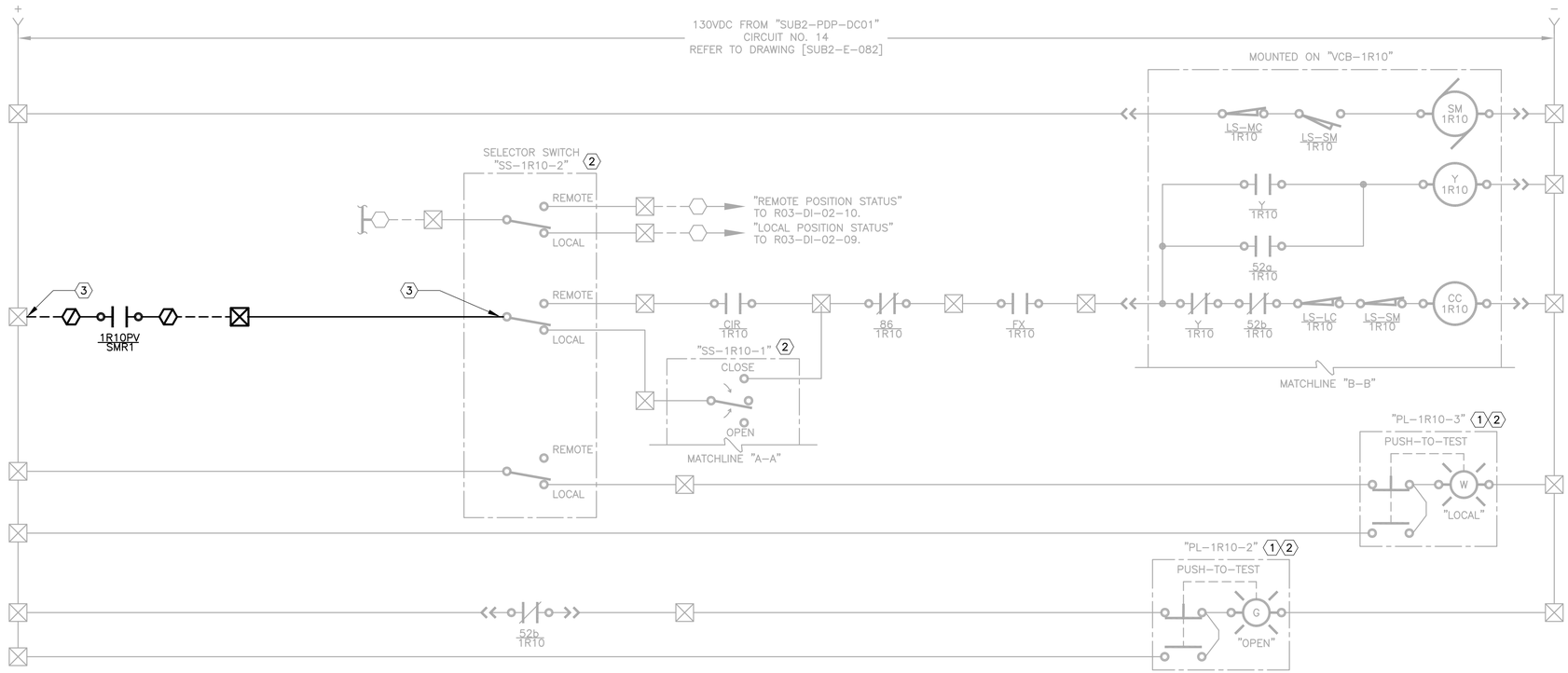

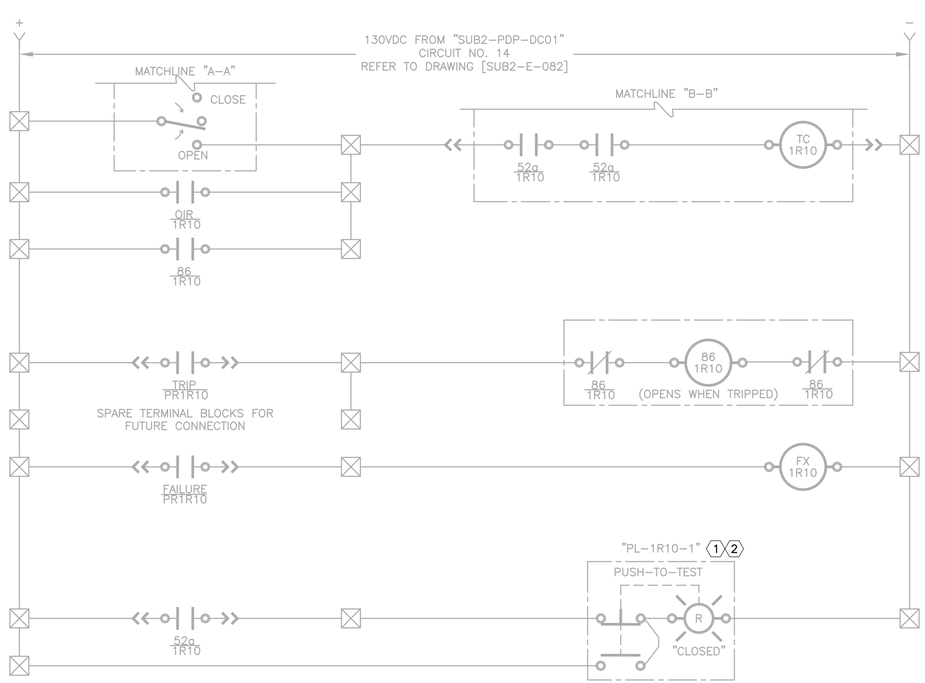

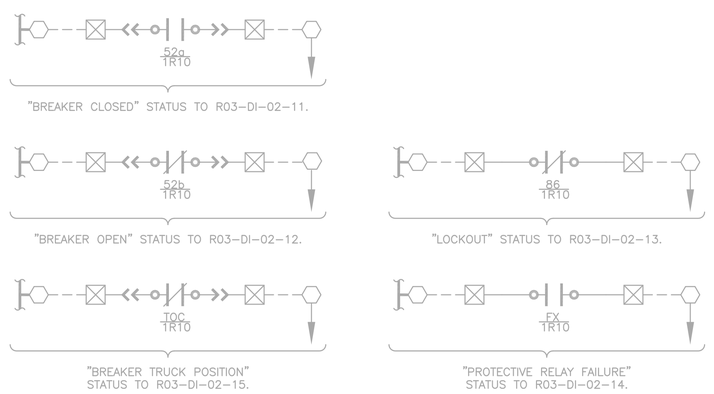

CONTROL LOGIC DEVICE LEGEND:

52a	BREAKER MOUNTED AUXILIARY CONTACT – OPEN WHEN BREAKER IS OPEN
52b	BREAKER MOUNTED AUXILIARY CONTACT – CLOSED WHEN BREAKER IS OPEN
52MOC	MECHANISM OPERATED CELL SWITCH – OPERATES AS AUXILIARY CONTACT WHEN BREAKER IS IN CONNECTED OR TEST POSITION
LS-MC	SPRING MOTOR CUTOFF SWITCH – OPEN WHEN BREAKER IS RACKED OUT
LS-SM	SPRING MOTOR LIMIT SWITCH – SHOWN WITH SPRINGS CHARGED – CHANGES STATES WHEN SPRING IS DISCHARGED
LS-LC	LATCH CHECK SWITCH – OPENS WHEN TRIP LATCH MOVES OUT OF ITS NORMAL POSITION
SM	SPRING CHARGING MOTOR
Y	ANTI-PUMP RELAY – PREVENTS ENERGIZATION OF CLOSE COIL WHEN ENERGIZED
CC	BREAKER CLOSE COIL – CLOSES BREAKER WHEN ENERGIZED
TC	BREAKER TRIP COIL – OPENS BREAKER WHEN ENERGIZED
86	PROTECTIVE RELAY TRIP LOCKOUT RELAY – MANUAL RESET
FX	PROTECTIVE RELAY FAILURE AUXILIARY RELAY – ENERGIZED WHEN PROTECTIVE RELAY STATUS IS OK
XX	PROTECTIVE RELAY XFER AUXILIARY RELAY
TOC	TRUCK OPERATED CONTACT – CONTACTS SHOWN WITH BREAKER RACKED OUT
SX	SYNC ENABLE AUXILIARY RELAY
S2L1PX	SUBSTATION MANAGEMENT RELAY PERMISSIVE OUTPUT AUXILIARY RELAY
S2L2PX	SUBSTATION MANAGEMENT RELAY PERMISSIVE OUTPUT AUXILIARY RELAY
PRMSV	BREAKER CLOSE PERMISSIVE AUXILIARY RELAY

KEY NOTES:

(1) INDICATING PILOT LIGHT WITH INTEGRAL MOMENTARY ACTION "PUSH-TO-TEST" PUSH BUTTON.

(2) MOUNTED ON FRONT OF PROPOSED SWITCHGEAR "SUB2-SWGR-1R" SECTION 1R10A.

(3) TERMINATE PROPOSED WIRE TO EXISTING CONTROL DEVICE.

BAR LENGTH ON ORIGINAL DRAWING EQUALS ONE INCH, ADJUST SCALE ACCORDINGLY.

REUSE OF DOCUMENTS

This document, and the designs incorporated herein, is an instrument of professional service that has been developed, designed and prepared by Harutunian Engineering, Inc., and is not to be used, in whole or in part, for any other project without giving written notice to Harutunian Engineering, Inc.

NO.	DATE:	DESCRIPTION

HARUTUNIAN ENGINEERING INCORPORATED
TEXAS FIRM REGISTRATION NUMBER F-2408
ENGINEERING AND ENVIRONMENTAL CONSULTANTS
8100 CROSS PARK DRIVE
AUSTIN, TEXAS 78754

STATE OF TEXAS
SHANT HARUTUNIAN
87735
REGISTERED
PROFESSIONAL ENGINEER
10/7/2019

DESIGNED BY:	HEI
CHECKED BY:	HEI
APPROVED BY:	HEI
SUBMITTAL DATE:	OCTOBER 2019
SCALE:	AS SHOWN

SOUTH AUSTIN REGIONAL WASTEWATER TREATMENT PLANT
ELECTRICAL SUBSTATION NO. 1 REPLACEMENT PROJECT
CIP I.D.# 3333.032

ELECTRICAL SUBSTATION NO. 2
SUB2-SWGR-1R FEEDER BREAKER "VCB-1R10"
CONTROL LOGIC – RENOVATION

PROJECT NO: 2014-300 | SHT. 764 OF 866 | DWG NO. SUB2-E-081

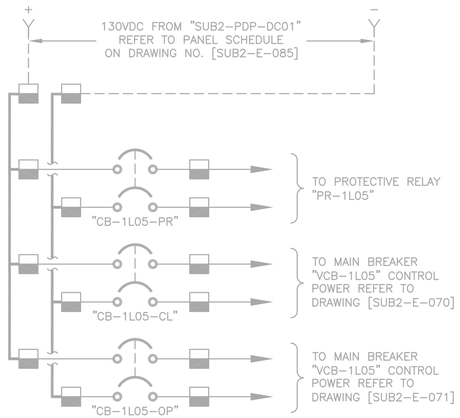

"SUB2-SWGR-1L" MAIN BREAKER
"VCB-1L05" 130VDC SUPPLY POWER
SCALE: N.T.S.

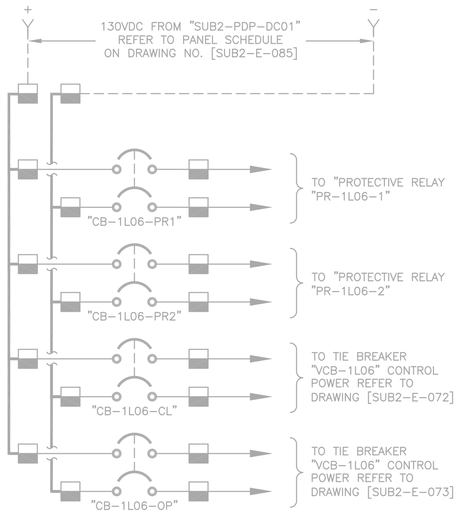

"SUB2-SWGR-1L" TIE BREAKER ①
"VCB-1L06" 130VDC SUPPLY POWER
SCALE: N.T.S.

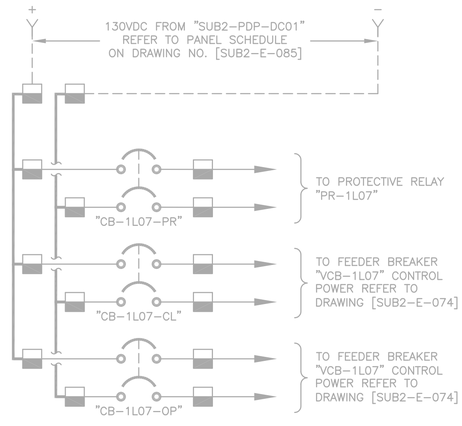

"SUB2-SWGR-1L" FEEDER BREAKER
"VCB-1L07" 130VDC SUPPLY POWER
SCALE: N.T.S.

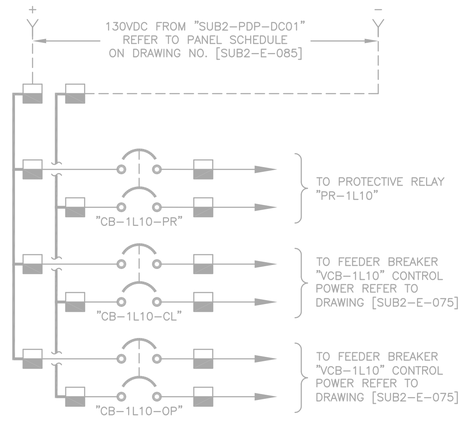

"SUB2-SWGR-1L" FEEDER BREAKER
"VCB-1L10" 130VDC SUPPLY POWER
SCALE: N.T.S.

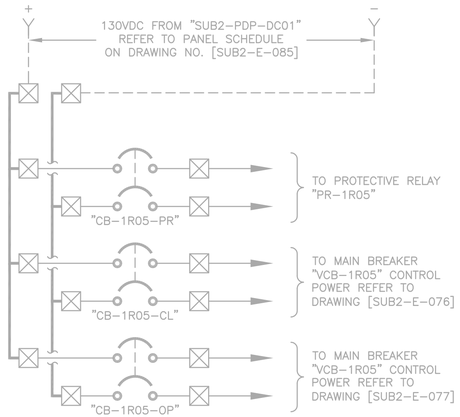

"SUB2-SWGR-1R" MAIN BREAKER
"VCB-1R05" 130VDC SUPPLY POWER
SCALE: N.T.S.

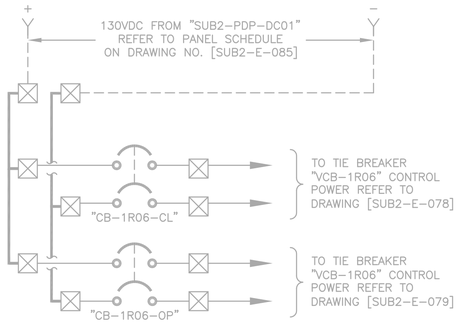

"SUB2-SWGR-1R" TIE BREAKER
"VCB-1R06" 130VDC SUPPLY POWER
SCALE: N.T.S.

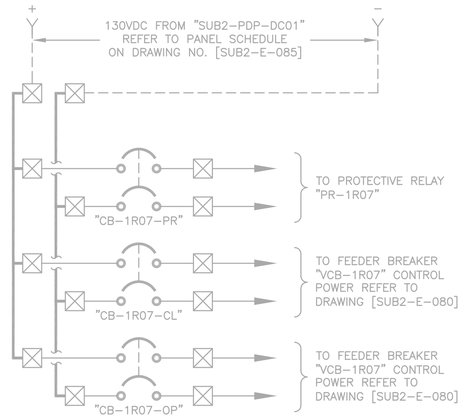

"SUB2-SWGR-1R" FEEDER BREAKER
"VCB-1R07" 130VDC SUPPLY POWER
SCALE: N.T.S.

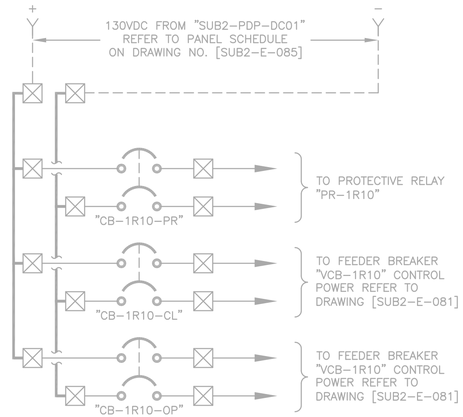

"SUB2-SWGR-1R" FEEDER BREAKER
"VCB-1R10" 130VDC SUPPLY POWER
SCALE: N.T.S.

KEY NOTES:

① RECORD DRAWING WERE INCOMPLETE, FIELD VERIFY PRIOR TO PERFORMING ANY DEMOLITION/RENOVATION ACTIVITIES.

NOTE: DRAWING IS INTENDED FOR REFERENCE PURPOSES ONLY.

BAR LENGTH ON ORIGINAL DRAWING EQUALS ONE INCH, ADJUST SCALE ACCORDINGLY.

REUSE OF DOCUMENTS

This document, and the designs incorporated herein, is an instrument of professional service that has been developed, designed and prepared by Harutunian Engineering, Inc., and is not to be used, in whole or in part, for any other project without giving written notice to Harutunian Engineering, Inc.

NO.	DATE:	DESCRIPTION

HARUTUNIAN ENGINEERING INCORPORATED
TEXAS FIRM REGISTRATION NUMBER F-2408
ENGINEERING AND ENVIRONMENTAL CONSULTANTS
8100 CROSS PARK DRIVE
AUSTIN, TEXAS 78754

STATE OF TEXAS
SHANT HARUTUNIAN
87735
REGISTERED
PROFESSIONAL ENGINEER
1/7/2019

DESIGNED BY:	HEI
CHECKED BY:	HEI
APPROVED BY:	HEI
SUBMITTAL DATE:	OCTOBER 2019
SCALE:	AS SHOWN

SOUTH AUSTIN REGIONAL WASTEWATER TREATMENT PLANT
ELECTRICAL SUBSTATION NO. 1 REPLACEMENT PROJECT
CIP I.D.# 3333.032

SUBSTATION NO. 2
DC BREAKER CONTROL POWER WIRING SCHEMATICS – RENOVATION

PROJECT NO: 2014-300 | SHT. 765 OF 866 | DWG NO. SUB2-E-082

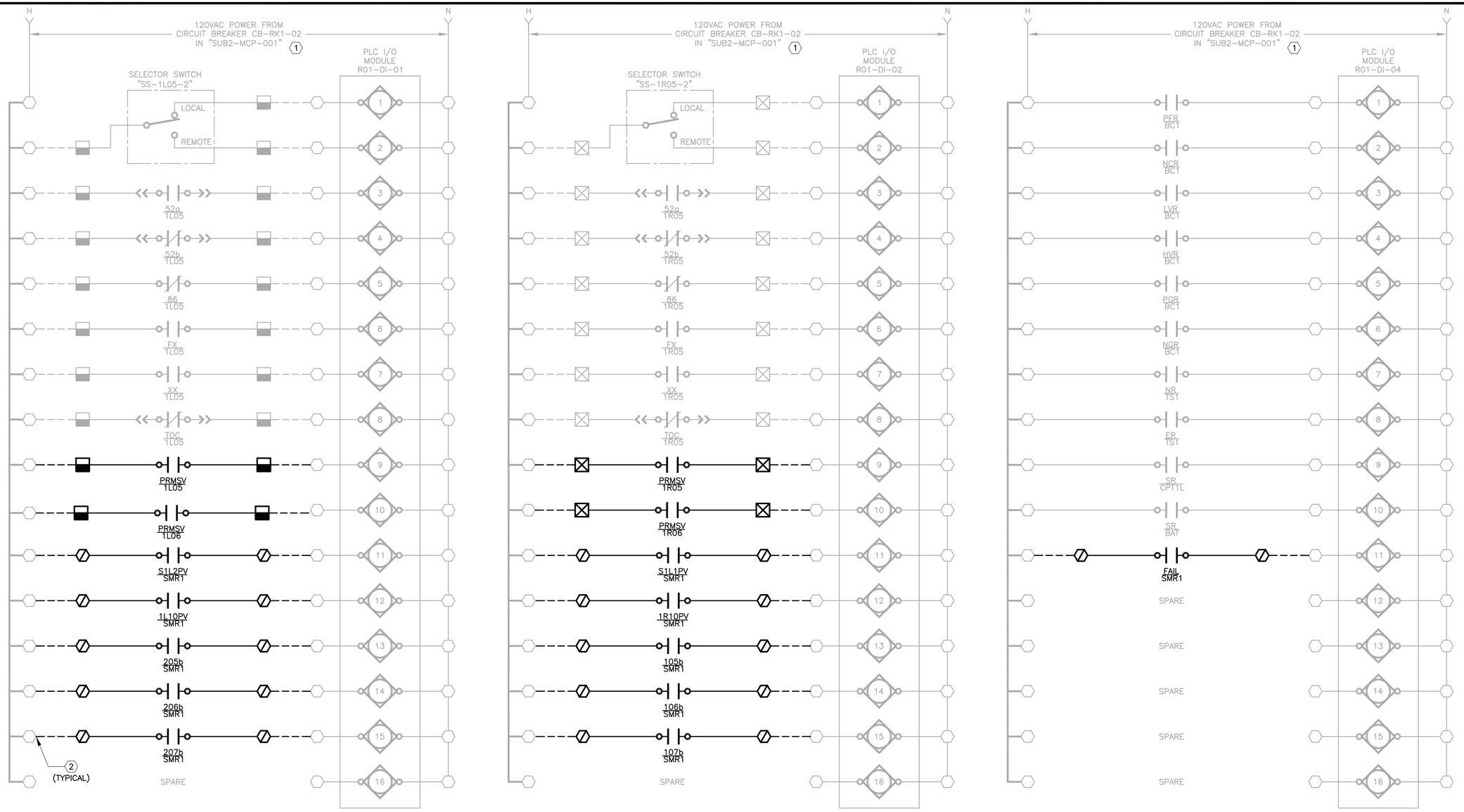

KEY NOTES:

1. RECORD DRAWING WERE INCOMPLETE, FIELD VERIFY PRIOR TO PERFORMING ANY DEMOLITION/RENOVATION ACTIVITIES.
2. FURNISH WIRE AND TERMINATE TO EXISTING TERMINAL BLOCK.

BAR LENGTH ON ORIGINAL DRAWING EQUALS ONE INCH, ADJUST SCALE ACCORDINGLY.

REUSE OF DOCUMENTS

This document, and the designs incorporated herein, is an instrument of professional service that has been developed, designed and prepared by Harutunian Engineering, Inc., and is not to be used, in whole or in part, for any other project without giving written notice to Harutunian Engineering, Inc.

NO.	DATE:	DESCRIPTION

HARUTUNIAN ENGINEERING INCORPORATED

TEXAS FIRM REGISTRATION NUMBER F-2408

ENGINEERING AND ENVIRONMENTAL CONSULTANTS
8100 CROSS PARK DRIVE
AUSTIN, TEXAS 78754

STATE OF TEXAS
SHANT HARUTUNIAN
87735
REGISTERED
PROFESSIONAL ENGINEER
10/7/2019

DESIGNED BY:	HEI
CHECKED BY:	HEI
APPROVED BY:	HEI
SUBMITTAL DATE:	OCTOBER 2019
SCALE:	AS SHOWN

SOUTH AUSTIN REGIONAL WASTEWATER TREATMENT PLANT
ELECTRICAL SUBSTATION NO. 1 REPLACEMENT PROJECT
CIP I.D.# 3333.032

SUBSTATION NO. 2
MAIN CONTROL PANEL "SUB2-MCP-001"
PLC I/O POINTS – RENOVATION

PROJECT NO: 2014-300 | SHT. 766 OF 866 | DWG NO. SUB2-E-083

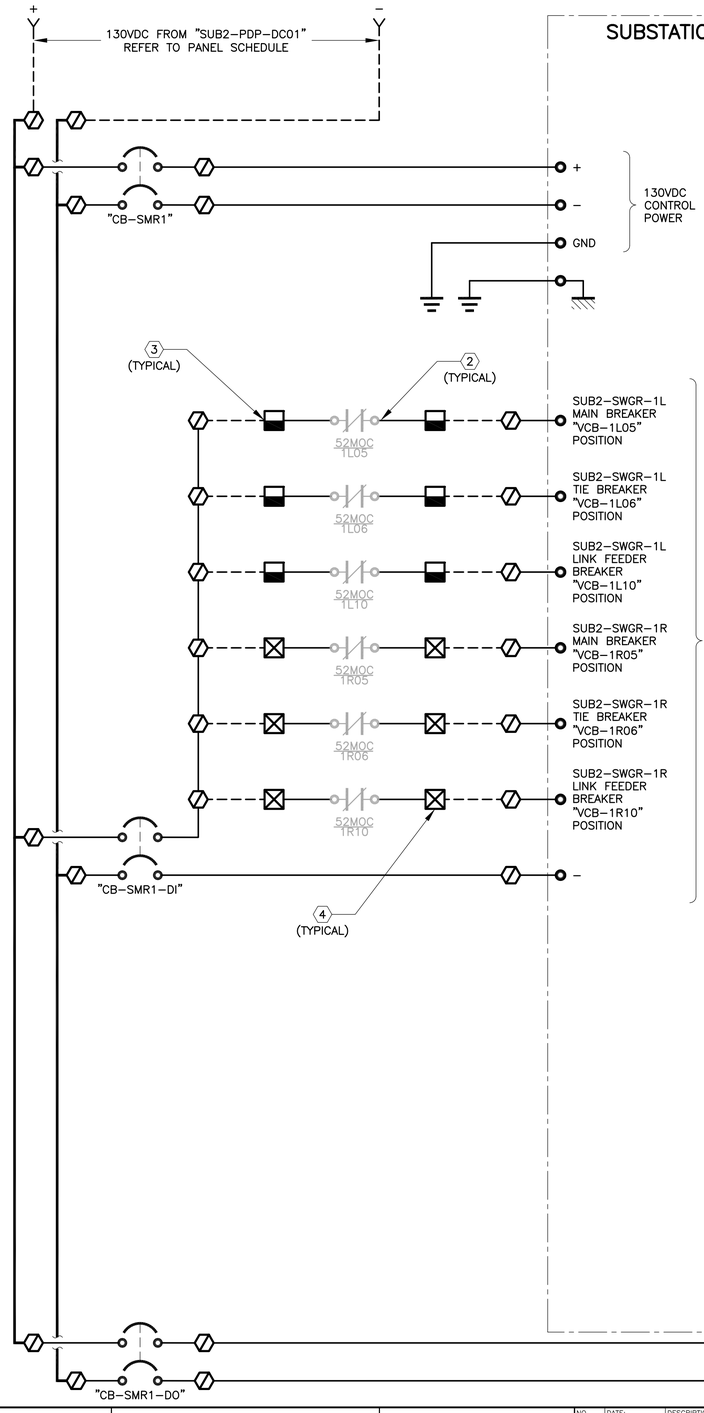

GENERAL NOTES:

1. CONTRACTOR SHALL FURNISH EXISTING SWITCHGEAR MANUFACTURER'S SERVICES TO FURNISH ALL MATERIAL AND LABOR TO MODIFY ALL THE EXISTING MECHANISM OPERATED CIRCUIT BREAKER AUXILIARY CONTACTS (MOC) SWITCHES SHOWN ON THIS SHEET SUCH THAT THE MOC SWITCHES SHALL REFLECT TRUE CIRCUIT BREAKER OPEN AND CLOSE STATUS POSITIONS AND SHALL OPERATE BOTH WHEN THE CIRCUIT BREAKER IS RACKED IN AS WELL AS WHEN THE CIRCUIT BREAKER IS RACKED OUT IN THE TEST POSITION. ALL MOC SWITCHES SHALL REFLECT CIRCUIT BREAKER OPEN STATUS WHEN THE CIRCUIT BREAKER IS RACKED OUT AND NOT IN TEST POSITION.

CONTROL LOGIC DEVICE LEGEND:

S2L1PV	"MAIN BREAKER CLOSE PERMISSIVE NO. 1" AUXILIARY RELAY
S2L2PV	"MAIN BREAKER CLOSE PERMISSIVE NO. 2" AUXILIARY RELAY
1R10PV	"LINK BREAKER CLOSE PERMISSIVE NO. 1" AUXILIARY RELAY
1L10PV	"LINK BREAKER CLOSE PERMISSIVE NO. 2" AUXILIARY RELAY
105b	SUBSTATION NO. 1 BREAKER "105" AUXILIARY RELAY
205b	SUBSTATION NO. 1 BREAKER "205" AUXILIARY RELAY
106b	SUBSTATION NO. 1 BREAKER "106" AUXILIARY RELAY
206b	SUBSTATION NO. 1 BREAKER "206" AUXILIARY RELAY
107b	SUBSTATION NO. 1 BREAKER "107" AUXILIARY RELAY
207b	SUBSTATION NO. 1 BREAKER "207" AUXILIARY RELAY

KEY NOTES:

(1) TERMINATE PROPOSED WIRING TO EXISTING TERMINAL BLOCKS.

(2) TERMINATE PROPOSED WIRING TO EXISTING MEDIUM VOLTAGE BREAKER CONTACTS.

(3) FURNISH AND INSTALL TERMINAL BLOCKS IN SWITCHGEAR "SUB2-SWGR-1L".

(4) FURNISH AND INSTALL TERMINAL BLOCKS IN SWITCHGEAR "SUB2-SWGR-1R".

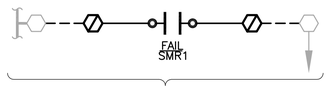

"SUBSTATION MANAGEMENT RELAY FAIL" ALARM TO PLC "SUB2-PLC-001". REFER TO DRAWING NO. [SUB2-E-083].

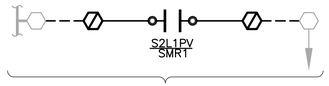

"MAIN BREAKER CLOSE PERMISSIVE NO. 1" STATUS TO PLC "SUB2-PLC-001". REFER TO DRAWING NO. [SUB2-E-083].

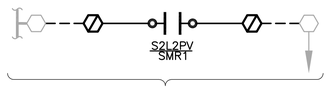

"MAIN BREAKER CLOSE PERMISSIVE NO. 2" STATUS TO PLC "SUB2-PLC-001". REFER TO DRAWING NO. [SUB2-E-083].

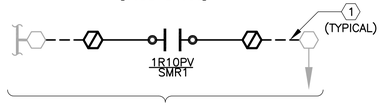

"LINK BREAKER CLOSE PERMISSIVE NO. 1" STATUS TO PLC "SUB2-PLC-001". REFER TO DRAWING NO. [SUB2-E-083].

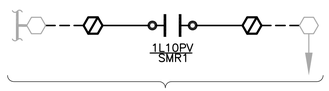

"LINK BREAKER CLOSE PERMISSIVE NO. 2" STATUS TO PLC "SUB2-PLC-001". REFER TO DRAWING NO. [SUB2-E-083].

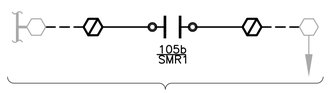

"SUBSTATION NO. 1 BREAKER 105 OPEN" STATUS TO PLC "SUB1-PLC-001". REFER TO DRAWING NO. [SUB2-E-083].

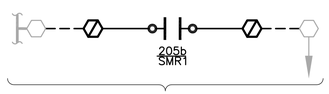

"SUBSTATION NO. 1 BREAKER 205 OPEN" STATUS TO PLC "SUB1-PLC-001". REFER TO DRAWING NO. [SUB2-E-083].

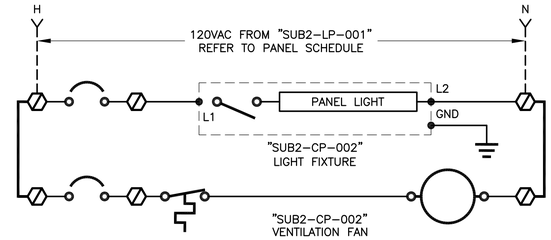

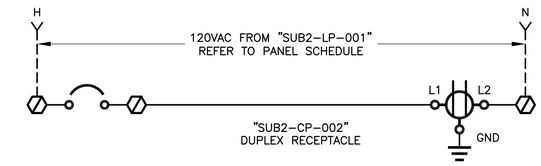

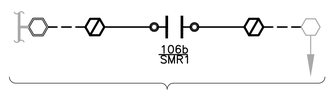

"SUBSTATION NO. 1 BREAKER 106 OPEN" STATUS TO PLC "SUB1-PLC-001". REFER TO DRAWING NO. [SUB2-E-083].

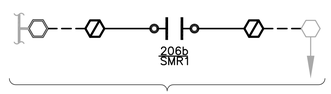

"SUBSTATION NO. 1 BREAKER 206 OPEN" STATUS TO PLC "SUB1-PLC-001". REFER TO DRAWING NO. [SUB2-E-083].

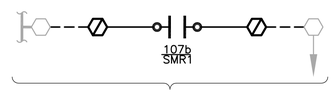

"SUBSTATION NO. 1 BREAKER 107 OPEN" STATUS TO PLC "SUB1-PLC-001". REFER TO DRAWING NO. [SUB2-E-083].

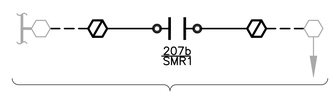

"SUBSTATION NO. 1 BREAKER 207 OPEN" STATUS TO PLC "SUB1-PLC-001". REFER TO DRAWING NO. [SUB2-E-083].

BAR LENGTH ON ORIGINAL DRAWING EQUALS ONE INCH, ADJUST SCALE ACCORDINGLY.

REUSE OF DOCUMENTS

This document, and the designs incorporated herein, is an instrument of professional service that has been developed, designed and prepared by Harutunian Engineering, Inc., and is not to be used, in whole or in part, for any other project without giving written notice to Harutunian Engineering, Inc.

NO.	DATE:	DESCRIPTION

HARUTUNIAN ENGINEERING INCORPORATED
TEXAS FIRM REGISTRATION NUMBER F-2408
ENGINEERING AND ENVIRONMENTAL CONSULTANTS
8100 CROSS PARK DRIVE
AUSTIN, TEXAS 78754

STATE OF TEXAS
SHANT HARUTUNIAN
87735
REGISTERED
PROFESSIONAL ENGINEER
10/7/2019

DESIGNED BY:	HEI
CHECKED BY:	HEI
APPROVED BY:	HEI
SUBMITTAL DATE:	OCTOBER 2019
SCALE:	AS SHOWN

SOUTH AUSTIN REGIONAL WASTEWATER TREATMENT PLANT
ELECTRICAL SUBSTATION NO. 1 REPLACEMENT PROJECT
CIP I.D.# 3333.032

SUBSTATION NO. 2
SUBSTATION MANAGEMENT CONTROL PANEL "SUB2-CP-002" WIRING SCHEMATICS

PROJECT NO: 2014-300 | SHT. 767 OF 866 | DWG NO. SUB2-E-084

130VDC POWER DISTRIBUTION PANEL
"SUB1–PDP–DC01"

+ –

MAIN CB
2P–800A
(SET@600A)

PDP–DC01/1,3	1–1/2" – 4#6(P), 1#8(G)	"VCB–1L04" CONTROL POWER (400VA)	CKT–1	2P–20A	CKT–2	2P–20A	"VCB–1R04" CONTROL POWER (400VA)	1–1/2" – 4#6(P), 1#8(G)	PDP–DC01/2,4
	INCLUDED IN CONDUIT WITH CIRCUIT NO. 1	"VCB–1L05" CONTROL POWER (413VA)	CKT–3	2P–20A	CKT–4	2P–20A	"VCB–1R05" CONTROL POWER (413VA)	INCLUDED IN CONDUIT WITH CIRCUIT NO. 2	
PDP–DC01/5,7	1–1/2" – 4#6(P), 1#8(G)	"VCB–1L06" CONTROL POWER (413VA)	CKT–5	2P–20A	CKT–6	2P–20A	"VCB–1R06" CONTROL POWER (413VA)	1–1/2" – 4#6(P), 1#8(G)	PDP–DC01/6,8
	INCLUDED IN CONDUIT WITH CIRCUIT NO. 5	"VCB–1L07" CONTROL POWER (400VA)	CKT–7	2P–20A	CKT–8	2P–20A	"VCB–1R07" CONTROL POWER (400VA)	INCLUDED IN CONDUIT WITH CIRCUIT NO. 6	
PDP–DC01/9,11,13	1–1/2" – 6#6(P), 1#8(G)	"VCB–1L08" CONTROL POWER (400VA)	CKT–9	2P–20A	CKT–10	2P–20A	"VCB–1R08" CONTROL POWER (400VA)	1–1/2" – 6#6(P), 1#8(G)	PDP–DC01/10,12,14
	INCLUDED IN CONDUIT WITH CIRCUIT NO. 9	"VCB–1L09" CONTROL POWER (400VA)	CKT–11	2P–20A	CKT–12	2P–20A	"VCB–1R09" CONTROL POWER (400VA)	INCLUDED IN CONDUIT WITH CIRCUIT NO. 10	
	INCLUDED IN CONDUIT WITH CIRCUIT NO. 9	"VCB–1L10" CONTROL POWER (400VA)	CKT–13	2P–20A	CKT–14	2P–20A	"VCB–1R10" CONTROL POWER (400VA)	INCLUDED IN CONDUIT WITH CIRCUIT NO. 10	
PDP–DC01/15,17,19	1–1/2" – 6#6(P), 1#8(G)	"VCB–1L11" CONTROL POWER (400VA)	CKT–15	2P–20A	CKT–16	2P–20A	"VCB–1R11" CONTROL POWER (400VA)	1–1/2" – 6#6(P), 1#8(G)	PDP–DC01/16,18,20
	INCLUDED IN CONDUIT WITH CIRCUIT NO. 15	"VCB–1L12" CONTROL POWER (400VA)	CKT–17	2P–20A	CKT–18	2P–20A	"VCB–1R12" CONTROL POWER (400VA)	INCLUDED IN CONDUIT WITH CIRCUIT NO. 16	
	INCLUDED IN CONDUIT WITH CIRCUIT NO. 15	"VCB–1L13" CONTROL POWER (400VA)	CKT–19	2P–20A	CKT–20	2P–20A	"VCB–1R13" CONTROL POWER (400VA)	INCLUDED IN CONDUIT WITH CIRCUIT NO. 16	
PDP–DC01/21,23,25	1–1/2" – 6#6(P), 1#8(G)	"VCB–1L14" CONTROL POWER (400VA)	CKT–21	2P–20A	CKT–22	2P–20A	"VCB–1R14" CONTROL POWER (400VA)	1–1/2" – 6#6(P), 1#8(G)	PDP–DC01/22,24,26
	INCLUDED IN CONDUIT WITH CIRCUIT NO. 21	"VCB–1L15" CONTROL POWER (400VA)	CKT–23	2P–20A	CKT–24	2P–20A	"VCB–1R15" CONTROL POWER (400VA)	INCLUDED IN CONDUIT WITH CIRCUIT NO. 22	

MATCHLINE "A–A" REFER TO DRAWING NO. [SUB2–E–086]

BAR LENGTH ON ORIGINAL DRAWING EQUALS ONE INCH, ADJUST SCALE ACCORDINGLY.

REUSE OF DOCUMENTS

This document, and the designs incorporated herein, is an instrument of professional service that has been developed, designed and prepared by Harutunian Engineering, Inc., and is not to be used, in whole or in part, for any other project without giving written notice to Harutunian Engineering, Inc.

NO.	DATE:	DESCRIPTION

HARUTUNIAN ENGINEERING INCORPORATED
TEXAS FIRM REGISTRATION NUMBER F–2408
ENGINEERING AND ENVIRONMENTAL CONSULTANTS
8100 CROSS PARK DRIVE
AUSTIN, TEXAS 78754

STATE OF TEXAS
SHANT HARUTUNIAN
87735
REGISTERED
PROFESSIONAL ENGINEER
10/7/2019

DESIGNED BY:	HEI
CHECKED BY:	HEI
APPROVED BY:	HEI
SUBMITTAL DATE:	OCTOBER 2019
SCALE:	AS SHOWN

SOUTH AUSTIN REGIONAL WASTEWATER TREATMENT PLANT
ELECTRICAL SUBSTATION NO. 1 REPLACEMENT PROJECT
CIP I.D.# 3333.032

SUBSTATION NO. 2 PANEL SCHEDULE RENOVATION (SHEET 1 OF 3)

PROJECT NO: 2014–300 | SHT. 768 OF 866 | DWG NO. SUB2–E–085

MATCHLINE "A–A" REFER TO DRAWING NO. [SUB2–E–085]

	INCLUDED IN CONDUIT WITH CIRCUIT NO. 21	"VCB–1L16" CONTROL POWER (400VA) + / –	CKT–25 / 2P–20A	CKT–26 / 2P–20A	"VCB–1R16" CONTROL POWER (400VA) + / –	INCLUDED IN CONDUIT WITH CIRCUIT NO. 22	
PDP–DC01/27	1–1/2" – 2#2(P), 1#8(G)	"SUB2–INV–001" INVERTER DC POWER (5000VA) + / –	CKT–27 / 2P–20A	CKT–28 / 2P–20A	BREAKER TEST AREA RECEPTACLE (5000VA) + / –	1" – 2#6(P), 1#8(G)	PDP–DC01/28
PDP–DC01/29	1" – 2#6(P), 1#8(G)	"SUB2–BM–001" BATTERY MONITOR CONTROL POWER (180VA) + / –	CKT–29 / 2P–20A	CKT–30 / 2P–20A	"SUB2–CP–001" BREAKER TEST CONTROL PANEL (180VA) + / –	1" – 2#6(P), 1#8(G)	PDP–DC01/30
PDP–DC01/31	1" – 2#6(P), 1#8(G)	"SUB2–CP–002" SUBSTATION MANAGEMENT RELAY CONTROL PANEL (180VA) + / –	CKT–31 / 2P–20A	CKT–32 / 2P–20A	SPARE		
		SPARE	CKT–33 / 2P–20A	CKT–34 / 2P–20A	SPARE		
		SPARE	CKT–35 / 2P–20A	CKT–36 / 2P–20A	SPARE		

BAR LENGTH ON ORIGINAL DRAWING EQUALS ONE INCH, ADJUST SCALE ACCORDINGLY.

REUSE OF DOCUMENTS

This document, and the designs incorporated herein, is an instrument of professional service that has been developed, designed and prepared by Harutunian Engineering, Inc., and is not to be used, in whole or in part, for any other project without giving written notice to Harutunian Engineering, Inc.

NO.	DATE:	DESCRIPTION

HARUTUNIAN ENGINEERING INCORPORATED

TEXAS FIRM REGISTRATION NUMBER F–2408

ENGINEERING AND ENVIRONMENTAL CONSULTANTS
8100 CROSS PARK DRIVE
AUSTIN, TEXAS 78754

STATE OF TEXAS
SHANT HARUTUNIAN
87735
REGISTERED
PROFESSIONAL ENGINEER
10/7/2019

DESIGNED BY:	HEI
CHECKED BY:	HEI
APPROVED BY:	HEI
SUBMITTAL DATE:	OCTOBER 2019
SCALE:	AS SHOWN

SOUTH AUSTIN REGIONAL WASTEWATER TREATMENT PLANT
ELECTRICAL SUBSTATION NO. 1 REPLACEMENT PROJECT
CIP I.D.# 3333.032

SUBSTATION NO. 2 PANEL SCHEDULE RENOVATION (SHEET 2 OF 3)

PROJECT NO: 2014–300 | SHT. 769 OF 866 | DWG NO. SUB2–E–086

PANELBOARD "SUB2–LP–001"
120/208V, 225A BUS, 3ø, 4W

A B C N

MAIN CB 3P–150A

	SPARE		CKT–1 1P–20A	CKT–2 1P–20A	FLUORESCENT LIGHTING (1500VA)	1" – 3#10(P), 1#10(G)	LP1–2,4
LP1–1,3,29	1" – 5#10(P), 1#10(G)	FLUORESCENT LIGHTING (1100VA)	CKT–3 1P–20A	CKT–4 1P–20A	FLUORESCENT LIGHTING (1600VA)	INCLUDED IN CONDUIT WITH CIRCUIT NO. 2	
	INCLUDED IN CONDUIT WITH CIRCUIT NO. 3	FLUORESCENT LIGHTING (1100VA)	CKT–5 1P–20A	CKT–6 1P–20A	LIGHTING CONTACTOR "SUB2–LC–001" (50VA)	1" – 2#10(P), 1#10(G)	LP1–6
LP1–7,8,17	1" –6#10(P), 1#10(G)	CONTROL PANEL LIGHTING (700VA)	CKT–7 1P–20A	CKT–8 1P–20A	CONTROL PANEL RECEPTACLES (450VA)	INCLUDED IN CONDUIT WITH CIRCUIT NO. 7	
	1" – 3#10(P), 1#10(G)	RECEPTACLES (720VA)	CKT–9 2P–20A	CKT–10 1P–20A	RECEPTACLES (900VA)	1" – 3#10(P), 1#10(G)	
LP1–9,11	INCLUDED IN CONDUIT WITH CIRCUIT NO. 9	RECEPTACLES (720VA)	CKT–11 1P–20A	CKT–12 1P–20A	RECEPTACLES (1080VA)	INCLUDED IN CONDUIT WITH CIRCUIT NO. 10	LP1–10,12
	SPARE		CKT–13 1P–20A	CKT–14 1P–20A	VOICE COMM. CABINET "SUB2–CP–VCOM1" (800VA)	INCLUDED IN CONDUIT WITH CIRCUIT NO. 15	
LP1–15	1" – 4#10(P), 1#10(G)	BATTERY CHARGER "SUB2–BC–001" COOLING FAN (55VA)	CKT–15 1P–20A	CKT–16 1P–20A	BATTERY CHARGER "SUB2–BC–002" COOLING FANS (55VA)	1" – 4#10(P), 1#10(G)	
LP1–17	INCLUDED IN CONDUIT WITH CIRCUIT NO. 7	CONTROL PANEL COOLING FANS (55VA)	CKT–17 1P–20A	CKT–18 1P–20A	DC DISTRIBUTION BUS "SUB2–TB–001" COOLING FANS (55VA)	INCLUDED IN CONDUIT WITH CIRCUIT NO. 16	LP1–16,18
	1" – 4#10(P), 1#10(G)	"SUB2–SWGR–1R" SPACE HEATERS SECTIONS 1R13–1R17 (1000VA)	CKT–19 1P–20A	CKT–20 1P–20A	"SUB2–SWGR–1L" SPACE HEATERS SECTIONS 1L13–1L17 (1000VA)	1" – 4#10(P), 1#10(G)	
LP1–19,21	INCLUDED IN CONDUIT WITH CIRCUIT NO. 19	"SUB2–SWGR–1R" SPACE HEATERS SECTIONS 1R07–1R12 (1000VA)	CKT–21 1P–20A	CKT–22 1P–20A	"SUB2–SWGR–1L" SPACE HEATERS SECTIONS 1L07–1L12 (1000VA)	INCLUDED IN CONDUIT WITH CIRCUIT NO. 22	LP1–20,22
	SPARE		CKT–23 CKT–25 CKT–27 3P–20A	CKT–24 CKT–26 2P–20A	OUTDOOR LIGHTING (2400VA)	1" – 2#10(P), 1#10(G)	LP1–24,26
				CKT–28 1P–20A	"SUB2–SWGR–1L" SPACE HEATERS (0VA)	1L01–1L08	LP1–28
	INCLUDED IN CONDUIT WITH CIRCUIT NO. 3	FLUORESCENT LIGHTING (1600VA)	CKT–29 2P–20A	CKT–30 1P–20A	BUS DUCT SPACE HEATER (1000VA)	1" – 2#10(P), 1#10(G)	LP1–30
	SPARE		CKT–31 1P–20A	CKT–32 1P–20A	SUBSTATION MANAGEMENT RELAY CONTROL PANEL "SUB2–CP–002" LIGHT AND FAN (70VA)	1" – 2#10(P), 1#10(G)	
	SPARE		CKT–33 1P–20A	CKT–34 1P–20A	SUBSTATION MANAGEMENT RELAY CONTROL PANEL "SUB2–CP–002" RECEPTACLE (180VA)	1" – 2#10(P), 1#10(G)	LP1–32,34
	SPARE		CKT–35 1P–20A	CKT–36 1P–20A	"SUB2–SWGR–1R" SPACE HEATER (0VA)	1R01–1R08	LP1–36
	SPARE		CKT–37 1P–20A	CKT–38 1P–20A	SPARE		
	SPARE		CKT–39 1P–20A	CKT–40 1P–20A	SPARE		
	SPARE		CKT–41 1P–20A	CKT–42 1P–20A	SPARE		

BAR LENGTH ON ORIGINAL DRAWING EQUALS ONE INCH, ADJUST SCALE ACCORDINGLY.

REUSE OF DOCUMENTS

This document, and the designs incorporated herein, is an instrument of professional service that has been developed, designed and prepared by Harutunian Engineering, Inc., and is not to be used, in whole or in part, for any other project without giving written notice to Harutunian Engineering, Inc.

NO.	DATE:	DESCRIPTION

HARUTUNIAN ENGINEERING INCORPORATED
TEXAS FIRM REGISTRATION NUMBER F–2408
ENGINEERING AND ENVIRONMENTAL CONSULTANTS
8100 CROSS PARK DRIVE
AUSTIN, TEXAS 78754

STATE OF TEXAS
SHANT HARUTUNIAN
87735
REGISTERED
PROFESSIONAL ENGINEER
10/7/2019

DESIGNED BY:	HEI
CHECKED BY:	HEI
APPROVED BY:	HEI
SUBMITTAL DATE:	OCTOBER 2019
SCALE:	AS SHOWN

SOUTH AUSTIN REGIONAL WASTEWATER TREATMENT PLANT
ELECTRICAL SUBSTATION NO. 1 REPLACEMENT PROJECT
CIP I.D.# 3333.032

SUBSTATION NO. 2 PANEL SCHEDULE RENOVATION (SHEET 3 OF 3)

PROJECT NO: 2014–300 | SHT. 770 OF 866 | DWG NO. SUB2–E–087

KEY NOTES:

1. THE IDENTIFICATION MARK SHOWN NEAR THE EQUIPMENT IS INTENDED ONLY FOR CROSS REFERENCING THE ENTRIES MADE IN THE NAMEPLATE AND EQUIPMENT SCHEDULES. REFER TO SCHEDULE ON THIS DRAWING FOR ADDITIONAL INFORMATION.
2. NUMBER IN CIRCLE CORRESPONDS TO NUMBERS ON CONTROL PANEL ELEVATIONS. REFER TO SCHEDULE ON THIS DRAWING FOR ADDITIONAL INFORMATION.
3. REINFORCED CONCRETE HOUSEKEEPING PAD. REFER TO INDOOR ELECTRICAL EQUIPMENT PAD INSTALLATION DETAIL 4 ON DRAWING NO. [TD-E-010].
4. RELOCATE EXISTING PATCH PANELS ON EXISTING EQUIPMENT RACK. TERMINATIONS OF EXISTING FIBER OPTIC CABLES SHALL REMAIN CONNECTED UNLESS FIELD CONDITIONS REQUIRE DISCONNECTION. SHOULD CABLES BE DISCONNECTED, CONTRACTOR TO COORDINATE ANY LOSS OF COMMUNICATION WITH THE OWNER. CONTRACTOR TO TAKE CAREFUL NOTES PRIOR TO RENOVATION ACTIVITIES AND RETURN COMMUNICATION TO WORKING ORDER.
5. FURNISH AND INSTALL PROPOSED FIBER OPTIC CABLE PATCH PANEL ON EXISTING EQUIPMENT RACK WITHIN THE COMMUNICATION CLOSET.

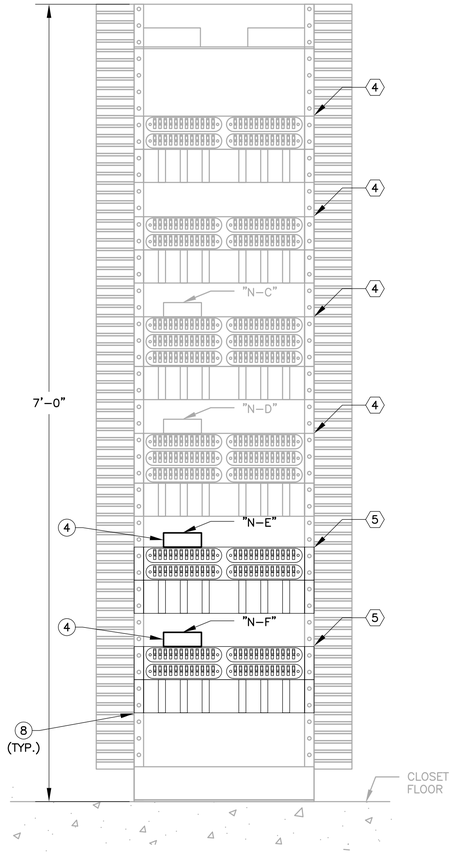

FIBER OPTIC PATCH PANEL RACK "SUB2-FPP-001"

SCALE: N.T.S.

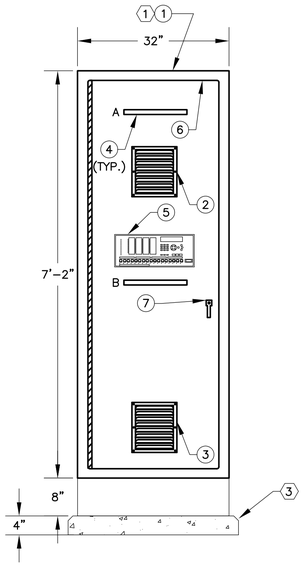

SWITCHGEAR MANAGEMENT RELAY CONTROL PANEL "SUB2-CP-002" FRONT ELEVATION

SCALE: N.T.S.

1 EQUIPMENT RACK/ CONTROL PANEL NAMEPLATE SCHEDULE

ID MARK	LINE NO.	LEGEND PLATE INSCRIPTION	LETTER SIZE (MINIMUM)
A	N/A	SUB2-CP-002	1/2"
B	N/A	SUB2-SMR-0001	1/4"
N-C	FIRST	"SUB2-FPPA-IFSB"/"SUB2-FPPA-PTC1"	3/8"
N-D	FIRST	"SUB2-FPPB-IFSB"/"SUB2-FPPB-PTC1"	3/8"
N-E	FIRST	"SUB2-FPPA-IFSB"/"SUB2-FPPA-PTC1"	3/8"
N-F	FIRST	"SUB2-FPPB-IFSB"/"SUB2-FPPB-PTC1"	3/8"

1 2 EQUIPMENT RACK/CONTROL PANEL EQUIPMENT SCHEDULE

MARK	DESCRIPTION
1	2'-8" WIDE X 2'-8" DEEP X 7-6" TALL, FREE STANDING INDIVIDUAL MODULAR CABINET SECTION, QUANTITY AS REQUIRED. REFER TO DRAWINGS AND SPECIFICATIONS.
2	10" HIGH X 9" WIDE UPPPER FAN & VENTILATION PLATE FINISHED TO MATCH PANEL.
3	10" HIGH X 9" WIDE LOWER VENTILATION PLATE FINISHED TO MATCH PANEL.
4	3-PLY, BLACK-WHITE-BLACK PHENOLIC NAMEPLATE. LETTERS BESIDE NAMEPLATE CORRESPOND TO IDENTIFICATION MARK IN NAMEPLATE SCHEDULE.
5	SWITCHGEAR MANAGEMENT RELAY
6	CONTROL PANEL DOOR
7	CONTROL PANEL DOOR HANDLE
8	FIBER OPTIC PATCH PANEL

BAR LENGTH ON ORIGINAL DRAWING EQUALS ONE INCH, ADJUST SCALE ACCORDINGLY.

REUSE OF DOCUMENTS

This document, and the designs incorporated herein, is an instrument of professional service that has been developed, designed and prepared by Harutunian Engineering, Inc., and is not to be used, in whole or in part, for any other project without giving written notice to Harutunian Engineering, Inc.

NO.	DATE:	DESCRIPTION

HARUTUNIAN ENGINEERING INCORPORATED

TEXAS FIRM REGISTRATION NUMBER F-2408

ENGINEERING AND ENVIRONMENTAL CONSULTANTS
8100 CROSS PARK DRIVE
AUSTIN, TEXAS 78754

STATE OF TEXAS
SHANT HARUTUNIAN
87735
REGISTERED
PROFESSIONAL ENGINEER
10/7/2019

DESIGNED BY:	HEI
CHECKED BY:	HEI
APPROVED BY:	HEI
SUBMITTAL DATE:	OCTOBER 2019
SCALE:	AS SHOWN

SOUTH AUSTIN REGIONAL WASTEWATER TREATMENT PLANT
ELECTRICAL SUBSTATION NO. 1 REPLACEMENT PROJECT
CIP I.D.# 3333.032

SUBSTATION NO. 2
COMMUNICATION AND LOW VOLTAGE EQUIPMENT FRONT ELEVATIONS - RENOVATION

PROJECT NO: 2014-300 | SHT. 771 OF 866 | DWG NO. SUB2-E-088

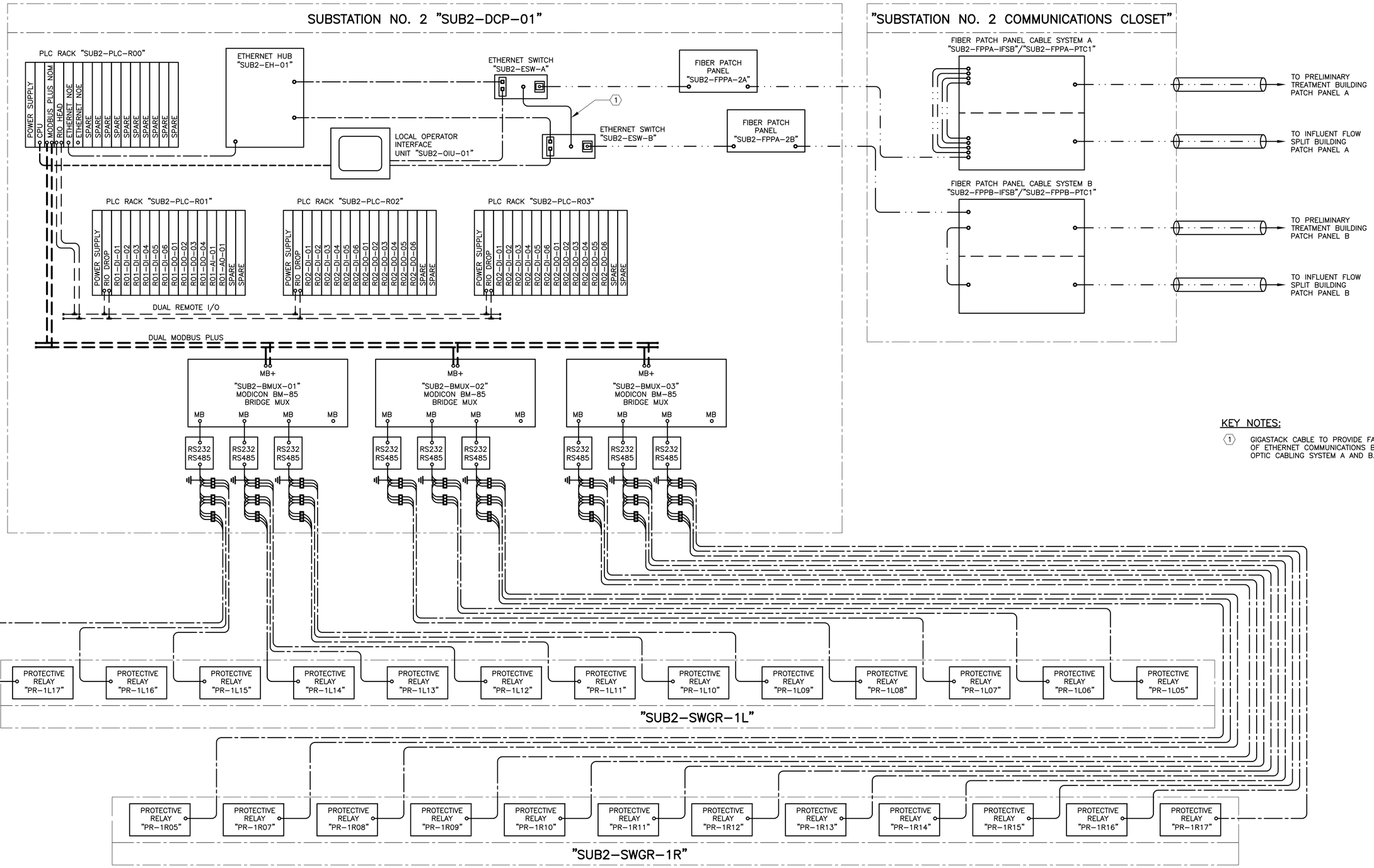

KEY NOTES:

1. GIGASTACK CABLE TO PROVIDE FAIL OVER FEATURE OF ETHERNET COMMUNICATIONS BETWEEN FIBER OPTIC CABLING SYSTEM A AND B.

BAR LENGTH ON ORIGINAL DRAWING EQUALS ONE INCH, ADJUST SCALE ACCORDINGLY.

REUSE OF DOCUMENTS

This document, and the designs incorporated herein, is an instrument of professional service that has been developed, designed and prepared by Harutunian Engineering, Inc., and is not to be used, in whole or in part, for any other project without giving written notice to Harutunian Engineering, Inc.

NO.	DATE:	DESCRIPTION

HARUTUNIAN ENGINEERING INCORPORATED

TEXAS FIRM REGISTRATION NUMBER F-2408

ENGINEERING AND ENVIRONMENTAL CONSULTANTS
8100 CROSS PARK DRIVE
AUSTIN, TEXAS 78754

STATE OF TEXAS
SHANT HARUTUNIAN
87735
REGISTERED
PROFESSIONAL ENGINEER
10/7/2019

DESIGNED BY:	HEI
CHECKED BY:	HEI
APPROVED BY:	HEI
SUBMITTAL DATE:	OCTOBER 2019
SCALE:	AS SHOWN

SOUTH AUSTIN REGIONAL WASTEWATER TREATMENT PLANT
ELECTRICAL SUBSTATION NO. 1 REPLACEMENT PROJECT
CIP I.D.# 3333.032

ELECTRICAL SUBSTATION NO. 2 PLC SYSTEM ARCHITECTURE – EXISTING

PROJECT NO: 2014-300 | SHT. 772 OF 866 | DWG NO. SUB2-I-001

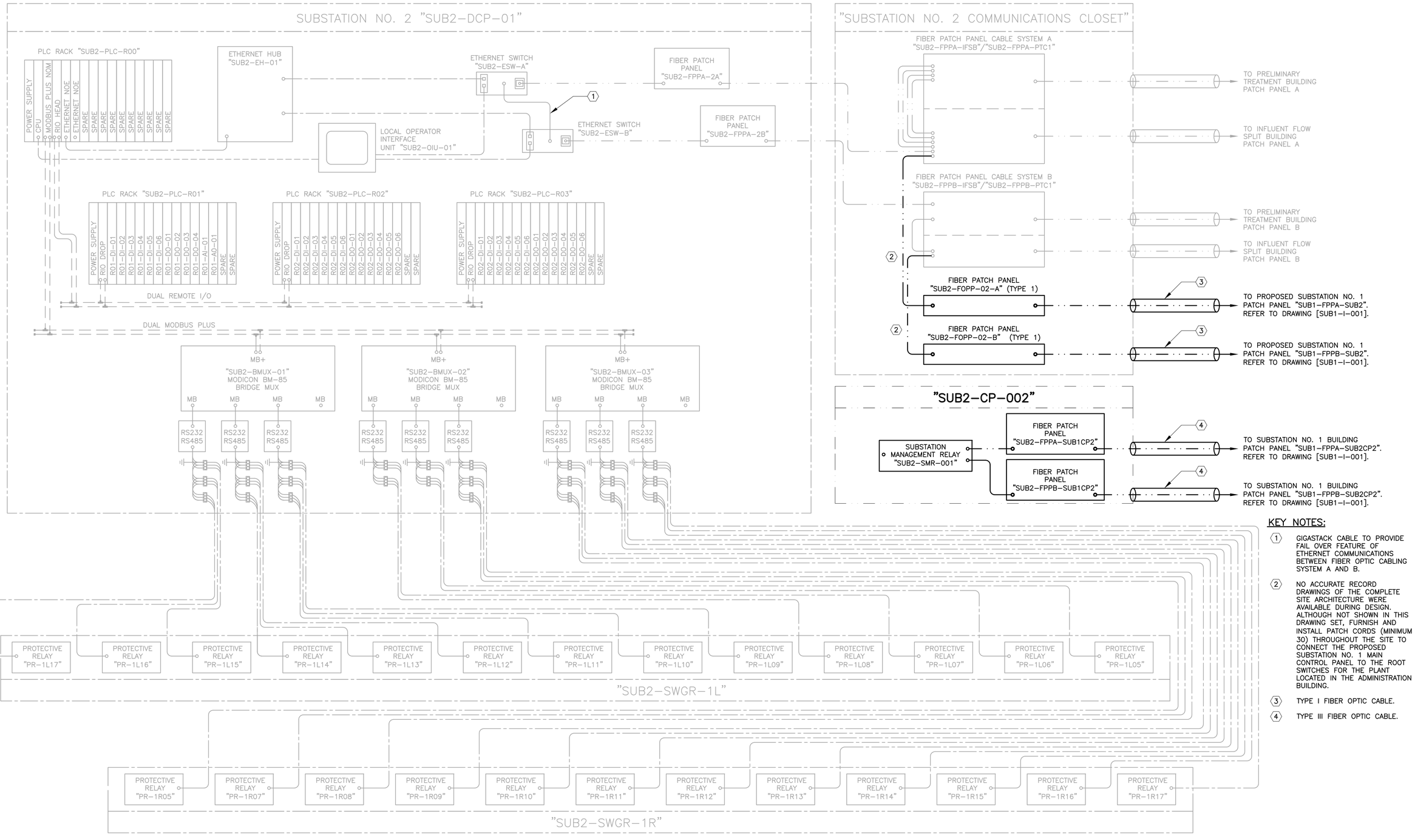

KEY NOTES:

1. GIGASTACK CABLE TO PROVIDE FAIL OVER FEATURE OF ETHERNET COMMUNICATIONS BETWEEN FIBER OPTIC CABLING SYSTEM A AND B.
2. NO ACCURATE RECORD DRAWINGS OF THE COMPLETE SITE ARCHITECTURE WERE AVAILABLE DURING DESIGN. ALTHOUGH NOT SHOWN IN THIS DRAWING SET, FURNISH AND INSTALL PATCH CORDS (MINIMUM 30) THROUGHOUT THE SITE TO CONNECT THE PROPOSED SUBSTATION NO. 1 MAIN CONTROL PANEL TO THE ROOT SWITCHES FOR THE PLANT LOCATED IN THE ADMINISTRATION BUILDING.
3. TYPE I FIBER OPTIC CABLE.
4. TYPE III FIBER OPTIC CABLE.

BAR LENGTH ON ORIGINAL DRAWING EQUALS ONE INCH, ADJUST SCALE ACCORDINGLY.

REUSE OF DOCUMENTS

This document, and the designs incorporated herein, is an instrument of professional service that has been developed, designed and prepared by Harutunian Engineering, Inc., and is not to be used, in whole or in part, for any other project without giving written notice to Harutunian Engineering, Inc.

NO.	DATE:	DESCRIPTION

HARUTUNIAN ENGINEERING INCORPORATED
TEXAS FIRM REGISTRATION NUMBER F-2408
ENGINEERING AND ENVIRONMENTAL CONSULTANTS
8100 CROSS PARK DRIVE
AUSTIN, TEXAS 78754

STATE OF TEXAS · SHANT HARUTUNIAN · 87735 · REGISTERED PROFESSIONAL ENGINEER
10/7/2019

DESIGNED BY:	HEI
CHECKED BY:	HEI
APPROVED BY:	HEI
SUBMITTAL DATE:	OCTOBER 2019
SCALE:	AS SHOWN

SOUTH AUSTIN REGIONAL WASTEWATER TREATMENT PLANT
ELECTRICAL SUBSTATION NO. 1 REPLACEMENT PROJECT
CIP I.D.# 3333.032

ELECTRICAL SUBSTATION NO. 2 PLC SYSTEM ARCHITECTURE – RENOVATION

PROJECT NO: 2014-300 | SHT. 773 OF 866 | DWG NO. SUB2-I-002

GENERAL NOTES:

1. ALL ELECTRICAL EQUIPMENT, WIRING, CONDUITS, ETC., SHOWN ON THIS DRAWING ARE EXISTING UNLESS NOTED OTHERWISE.
2. THE INFORMATION CONTAINED ON THIS DRAWING WAS OBTAINED FROM INFORMATION AND DRAWINGS THAT WERE PROVIDED BY THE CITY OF AUSTIN. THIS INFORMATION HAS NOT BEEN FIELD VERIFIED.

KEY NOTES:

(1) EXISTING 480V MOTOR CONTROL CENTER MANUFACTURED BY "SQUARE D", CLASS "8998", MODEL "MODEL 4", F/O# "45-96172-15", AND SERIAL NUMBER "B712440".

(2) EXISTING 480V MOTOR CONTROL CENTER MANUFACTURED BY "SQUARE D", CLASS "8998", MODEL "MODEL 4", F/O# "45-96172-16", AND SERIAL NUMBER "B712479".

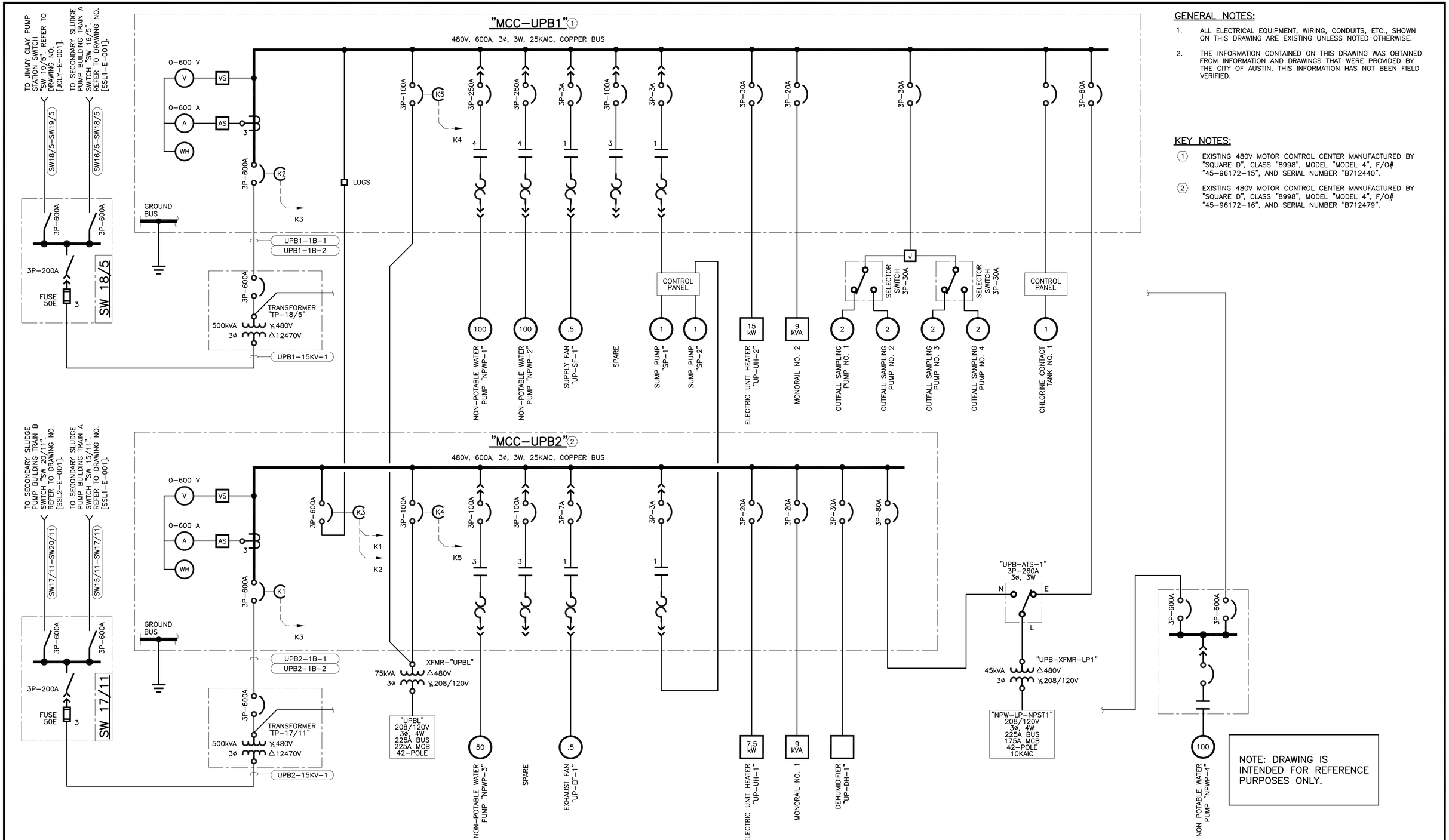

BAR LENGTH ON ORIGINAL DRAWING EQUALS ONE INCH, ADJUST SCALE ACCORDINGLY.

REUSE OF DOCUMENTS

This document, and the designs incorporated herein, is an instrument of professional service that has been developed, designed and prepared by Harutunian Engineering, Inc., and is not to be used, in whole or in part, for any other project without giving written notice to Harutunian Engineering, Inc.

NO.	DATE:	DESCRIPTION

HARUTUNIAN ENGINEERING INCORPORATED
TEXAS FIRM REGISTRATION NUMBER F-2408
ENGINEERING AND ENVIRONMENTAL CONSULTANTS
8100 CROSS PARK DRIVE
AUSTIN, TEXAS 78754

STATE OF TEXAS · SHANT HARUTUNIAN · 87735 · REGISTERED · PROFESSIONAL ENGINEER
10/7/2019

DESIGNED BY:	HEI
CHECKED BY:	HEI
APPROVED BY:	HEI
SUBMITTAL DATE:	OCTOBER 2019
SCALE:	AS SHOWN

SOUTH AUSTIN REGIONAL WASTEWATER TREATMENT PLANT
ELECTRICAL SUBSTATION NO. 1 REPLACEMENT PROJECT
CIP I.D.# 3333.032

UTILITY PUMP BUILDING
DETAILED ONE-LINE DIAGRAM

PROJECT NO: 2014-300 | SHT. 774 OF 866 | DWG NO. UPB-E-001

GENERAL NOTES:

1. ALL ELECTRICAL EQUIPMENT, WIRING, CONDUITS, ETC., SHOWN ON THIS DRAWING ARE EXISTING UNLESS NOTED OTHERWISE.
2. THE INFORMATION CONTAINED ON THIS DRAWING WAS OBTAINED FROM INFORMATION AND DRAWINGS THAT WERE PROVIDED BY THE CITY OF AUSTIN. THIS INFORMATION HAS NOT BEEN FIELD VERIFIED.

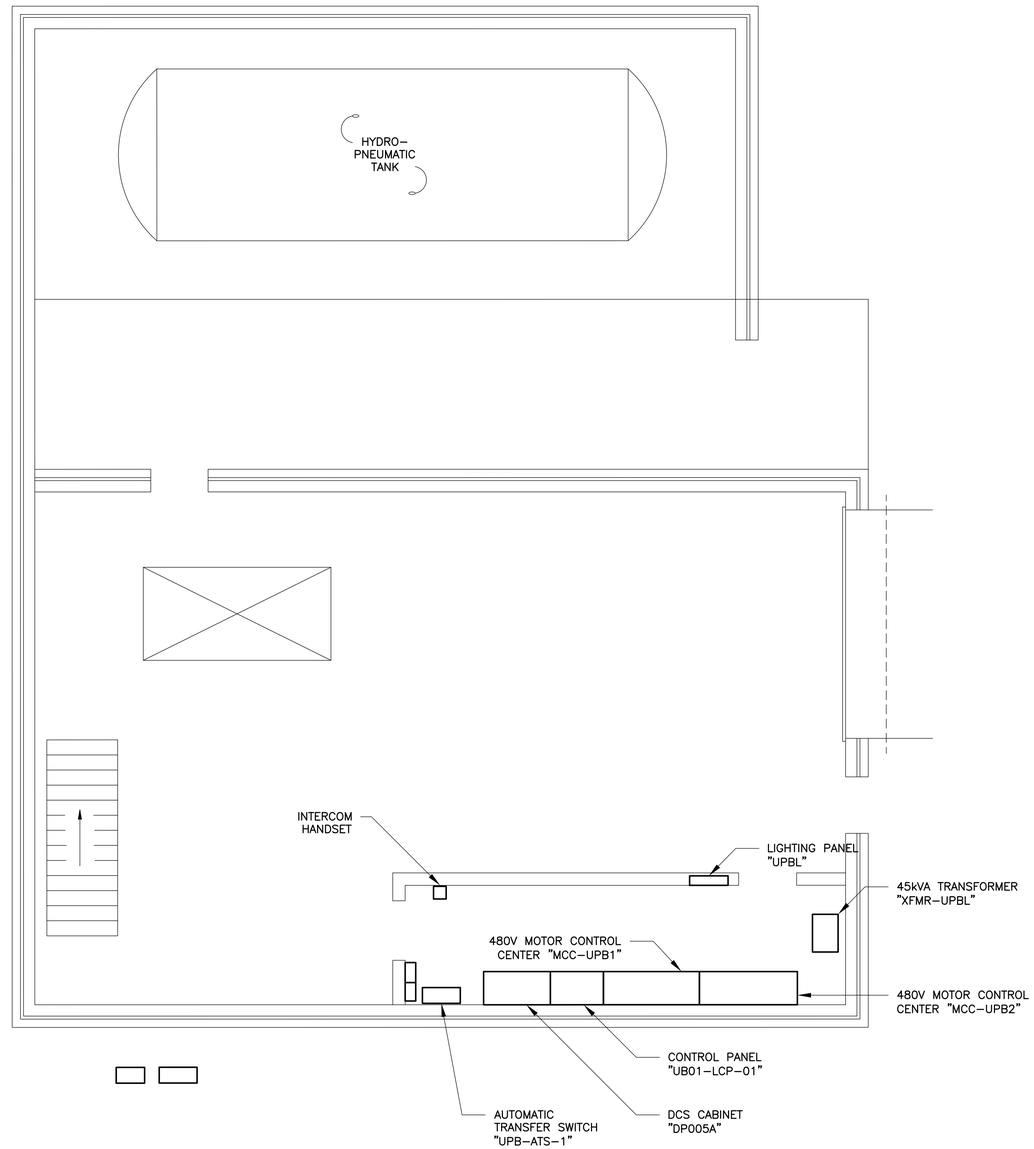

N
PLANT NORTH

UTILITY PUMP BUILDING
SCALE: 1/4" = 1'

NOTE: DRAWING IS INTENDED FOR REFERENCE PURPOSES ONLY.

BAR LENGTH ON ORIGINAL DRAWING EQUALS ONE INCH, ADJUST SCALE ACCORDINGLY.

REUSE OF DOCUMENTS

This document, and the designs incorporated herein, is an instrument of professional service that has been developed, designed and prepared by Harutunian Engineering, Inc., and is not to be used, in whole or in part, for any other project without giving written notice to Harutunian Engineering, Inc.

NO.	DATE:	DESCRIPTION

HARUTUNIAN ENGINEERING INCORPORATED
TEXAS FIRM REGISTRATION NUMBER F–2408
ENGINEERING AND ENVIRONMENTAL CONSULTANTS
8100 CROSS PARK DRIVE
AUSTIN, TEXAS 78754

STATE OF TEXAS
SHANT HARUTUNIAN
87735
REGISTERED
PROFESSIONAL ENGINEER
10/7/2019

DESIGNED BY:	HEI
CHECKED BY:	HEI
APPROVED BY:	HEI
SUBMITTAL DATE:	OCTOBER 2019
SCALE:	AS SHOWN

SOUTH AUSTIN REGIONAL WASTEWATER TREATMENT PLANT
ELECTRICAL SUBSTATION NO. 1 REPLACEMENT PROJECT
CIP I.D.# 3333.032

UTILITY PUMP BUILDING
EQUIPMENT LOCATION PLAN – EXISTING

PROJECT NO: 2014–300 | SHT. 775 OF 866 | DWG NO. UPB–E–002

POWER CENTER "NPW–MCC–1L" (1)

4160V, 1200A, 3ø, 3W, 61KAIC, COPPER BUS

LOAD BREAK SWITCH "LBS–MCC1L" 3P–960A

K3 K1 K4

FUSE "PF–MCC1L" 350E

1200/5 STB "CT–MCC1L" X1–X5/MR

TIE BREAK SWITCH "TBS–MCC1L" 3P–1000A

K4 K1 K2

"PT–MCC1L–2" 4160V 120V

4160V △ 1ø 120V Y

1P–30A SPACE HEATER CIRCUITRY

LOAD BREAK SWITCH "LBS–XFM2L" 3P–960A

FUSE "PF–XFMR2L" 100E

POWER MONITORING UNIT "PMU–MCC1L"

V A kW kVAR kWH

VOLTAGE (øA,øB,øC) CURRENT (øA,øB,øC) ACTIVE POWER REACTIVE POWER KILOWATT–HOURS

"PT–MCC1L–1" 4160V 120V

"SC–MCC1L" S.C.

"LA–MCC1L" L.A.

GROUND BUS

LUGS

F1–MCC–NPW1L F4–MCC–NPW1L
F2–MCC–NPW1L F5–MCC–NPW1L
F3–MCC–NPW1L F6–MCC–NPW1L

LUGS

TIE1–MCC–NPW1 TIE4–MCC–NPW1
TIE2–MCC–NPW1 TIE5–MCC–NPW1
TIE3–MCC–NPW1 TIE6–MCC–NPW1

MOTOR MANAGEMENT RELAY "MMR–NP2"

PF kWH kVAR kW A V

POWER FACTORS KILOWATT–HOURS REACTIVE POWER ACTIVE POWER CURRENT (øA,øB,øC) VOLTAGE (øA,øB,øC)

48 50 46 37 27 86 50N 50G 51 59

NON LOAD BREAK ISOLATION SWITCH "NLBS–NP2" 3P–1200A

FUSE "PF–NP2–1" 3P–100A/3R

400A

"CT–NP2G" 50/5 CONTROL INTERLOCK STB 1

"CT–NP2" 100/5 STB 3 X1–X5/MR

25KVAR 25KVAR 50KVAR 50KVAR 50KVAR

MOTOR MANAGEMENT RELAY "MMR–NP4"

NON LOAD BREAK ISOLATION SWITCH "NLBS–NP4" 3P–1200A

FUSE "PF–NP4–1" 3P–100A/3R

400A

"CT–NP4G" 50/5 CONTROL INTERLOCK STB 1

"CT–NP4" 100/5 STB 3 X1–X5/MR

25KVAR 25KVAR 50KVAR 50KVAR 50KVAR

MOTOR MANAGEMENT RELAY "MMR–NP6"

NON LOAD BREAK ISOLATION SWITCH "NLBS–NP6" 3P–1200A

FUSE "PF–NP6–1" 3P–100A/3R

400A

"CT–NP6G" 50/5 CONTROL INTERLOCK STB 1

"CT–NP6" 100/5 STB 3 X1–X5/MR

25KVAR 25KVAR 50KVAR 50KVAR 50KVAR

GROUND BUS

TRANSFORMER "NPW–XFRM–2L"

500kVA 3ø △4160V Y 480V

250 250

4160V FROM POWER CENTER "FBPS–MCC–5000K" REFER TO DRAWING NO. [FB1–E–001].

TO CONTROL PANEL "NPW–DCP–02"

TO "NPW–MCC–1R". REFER TO DRAWING NO. [WR–E–002].

TO "NPW–MCC–2L". REFER TO DRAWING NO. [WR–E–003].

TO CONTROL PANEL "NPW–DCP–01"

NPW PUMP MOTOR "NPW–NP–2"

TO CONTROL PANEL "NPW–DCP–01"

NPW PUMP MOTOR "NPW–NP–4"

TO CONTROL PANEL "NPW–DCP–01"

FUTURE NPW PUMP MOTOR "NPW–NP–6"

NOTE: DRAWING IS INTENDED FOR REFERENCE PURPOSES ONLY.

GENERAL NOTES:

1. ALL ELECTRICAL EQUIPMENT, WIRING, CONDUITS, ETC., SHOWN ON THIS DRAWING ARE EXISTING UNLESS NOTED OTHERWISE.
2. THE INFORMATION CONTAINED ON THIS DRAWING WAS OBTAINED FROM INFORMATION AND DRAWINGS THAT WERE PROVIDED BY THE CITY OF AUSTIN. THIS INFORMATION HAS NOT BEEN FIELD VERIFIED.

KEY NOTES:

(1) THE EXISTING 4160V MOTOR CONTROL CENTER IS MANUFACTURED BY "GE", MODEL "LIMITAMP", REQUISITION NO. "41605009–MV", AND CATALOG NO. "0832X0495".

BAR LENGTH ON ORIGINAL DRAWING EQUALS ONE INCH, ADJUST SCALE ACCORDINGLY.

REUSE OF DOCUMENTS

This document, and the designs incorporated herein, is an instrument of professional service that has been developed, designed and prepared by Harutunian Engineering, Inc., and is not to be used, in whole or in part, for any other project without giving written notice to Harutunian Engineering, Inc.

NO.	DATE:	DESCRIPTION

HARUTUNIAN ENGINEERING INCORPORATED

TEXAS FIRM REGISTRATION NUMBER F–2408

ENGINEERING AND ENVIRONMENTAL CONSULTANTS
8100 CROSS PARK DRIVE
AUSTIN, TEXAS 78754

STATE OF TEXAS SHANT HARUTUNIAN 87735 REGISTERED PROFESSIONAL ENGINEER 10/7/2019

DESIGNED BY:	HEI
CHECKED BY:	HEI
APPROVED BY:	HEI
SUBMITTAL DATE:	OCTOBER 2019
SCALE:	AS SHOWN

SOUTH AUSTIN REGIONAL WASTEWATER TREATMENT PLANT
ELECTRICAL SUBSTATION NO. 1 REPLACEMENT PROJECT
CIP I.D.# 3333.032

WATER REUSE

DETAILED ONE–LINE DIAGRAM (SHEET 1 OF 4)

PROJECT NO: 2014–300 | SHT. 776 OF 866 | DWG NO. WR–E–001

POWER CENTER "NPW–MCC–1R" (1)

4160V, 1200A, 3ø, 3W, 61KAIC, COPPER BUS

LOAD BREAK SWITCH "LBS–MCC1R" 3P–960A

FUSE "PF–MCC1R" 350E

"CT–MCC1R" 1200/5 X1–X5/MR

TIE BREAK SWITCH "TBS–MCC1R" 3P–1000A

"PT–MCC1R–2" 4160V 120V

1P–30A SPACE HEATER CIRCUITRY

LOAD BREAK SWITCH "LBS–XFM2R" 3P–960A

FUSE "PF–XFMR2R" 100E

POWER MONITORING UNIT "PMU–MCC1R"

V | A | kW | kVAR | kWH

VOLTAGE (øA,øB,øC) | CURRENT (øA,øB,øC) | ACTIVE POWER | REACTIVE POWER | KILOWATT–HOURS

"PT–MCC1R–1" 4160V 120V

"SC–MCC1R" S.C.

"LA–MCC1R" L.A.

GROUND BUS

LUGS

F1–MCC–NPW1R F4–MCC–NPW1R
F2–MCC–NPW1R F5–MCC–NPW1R
F3–MCC–NPW1R F6–MCC–NPW1R

LUGS

TIE1–MCC–NPW1 TIE4–MCC–NPW1
TIE2–MCC–NPW1 TIE5–MCC–NPW1
TIE3–MCC–NPW1 TIE6–MCC–NPW1

4160V FROM POWER CENTER "FBPS–MCC–500HP" REFER TO DRAWING NO. [FB1–E–002].

TO CONTROL PANEL "NPW–DCP–02"

TO "NPW–MCC–1L". REFER TO DRAWING NO. [WR–E–001].

TRANSFORMER "NPW–XFRM–2R" 500kVA 3ø Δ4160V Y480V

TO "NPW–MCC–2R". REFER TO DRAWING NO. [WR–E–003].

NON LOAD BREAK ISOLATION SWITCH "NLBS–NP1" 3P–1200A

FUSE "PF–NP1–1" 3P–100A/3R

MOTOR MANAGEMENT RELAY "MMR–NP1"

PF | kWH | kVAR | kW | A | V

POWER FACTORS | KILOWATT–HOURS | REACTIVE POWER | ACTIVE POWER | CURRENT (øA,øB,øC) | VOLTAGE (øA,øB,øC)

48 | 50 | 46 | 37 | 27

86 | 50N | 50G | 51 | 59

400A

CONTROL INTERLOCK

"CT–NP1G" 50/5 STB 1

"CT–NP1" 100/5 STB 3 X1–X5/MR

25KVAR | 25KVAR | 50KVAR | 50KVAR | 50KVAR

TO CONTROL PANEL "NPW–DCP–01"

NPW PUMP MOTOR "NPW–NP–2" 250

NON LOAD BREAK ISOLATION SWITCH "NLBS–NP3" 3P–1200A

FUSE "PF–NP3–1" 3P–100A/3R

MOTOR MANAGEMENT RELAY "MMR–NP3"

400A

CONTROL INTERLOCK

"CT–NP3G" 50/5 STB 1

"CT–NP3" 100/5 STB 3 X1–X5/MR

25KVAR | 25KVAR | 50KVAR | 50KVAR | 50KVAR

TO CONTROL PANEL "NPW–DCP–01"

NPW PUMP MOTOR "NPW–NP–4" 250

NON LOAD BREAK ISOLATION SWITCH "NLBS–NP5" 3P–1200A

FUSE "PF–NP5–1" 3P–100A/3R

MOTOR MANAGEMENT RELAY "MMR–NP5"

400A

CONTROL INTERLOCK

"CT–NP5G" 50/5 STB 1

"CT–NP5" 100/5 STB 3 X1–X5/MR

25KVAR | 25KVAR | 50KVAR | 50KVAR | 50KVAR

GROUND BUS

TO CONTROL PANEL "NPW–DCP–01"

NPW PUMP MOTOR "NPW–NP–6" 250

NOTE: DRAWING IS INTENDED FOR REFERENCE PURPOSES ONLY.

GENERAL NOTES:

1. ALL ELECTRICAL EQUIPMENT, WIRING, CONDUITS, ETC., SHOWN ON THIS DRAWING ARE EXISTING UNLESS NOTED OTHERWISE.
2. THE INFORMATION CONTAINED ON THIS DRAWING WAS OBTAINED FROM INFORMATION AND DRAWINGS THAT WERE PROVIDED BY THE CITY OF AUSTIN. THIS INFORMATION HAS NOT BEEN FIELD VERIFIED.

KEY NOTES:

(1) THE EXISTING 4160V MOTOR CONTROL CENTER IS MANUFACTURED BY "GE", MODEL "LIMITAMP", REQUISITION NO. "41605009–MV", AND CATALOG NO. "0832X0495".

BAR LENGTH ON ORIGINAL DRAWING EQUALS ONE INCH, ADJUST SCALE ACCORDINGLY.

REUSE OF DOCUMENTS

This document, and the designs incorporated herein, is an instrument of professional service that has been developed, designed and prepared by Harutunian Engineering, Inc., and is not to be used, in whole or in part, for any other project without giving written notice to Harutunian Engineering, Inc.

NO.	DATE:	DESCRIPTION

HARUTUNIAN ENGINEERING INCORPORATED

TEXAS FIRM REGISTRATION NUMBER F–2408

ENGINEERING AND ENVIRONMENTAL CONSULTANTS
8100 CROSS PARK DRIVE
AUSTIN, TEXAS 78754

STATE OF TEXAS · SHANT HARUTUNIAN 87735 · REGISTERED PROFESSIONAL ENGINEER

10/7/2019

DESIGNED BY:	HEI
CHECKED BY:	HEI
APPROVED BY:	HEI
SUBMITTAL DATE:	OCTOBER 2019
SCALE:	AS SHOWN

SOUTH AUSTIN REGIONAL WASTEWATER TREATMENT PLANT
ELECTRICAL SUBSTATION NO. 1 REPLACEMENT PROJECT
CIP I.D.# 3333.032

WATER REUSE

DETAILED ONE–LINE DIAGRAM (SHEET 2 OF 4)

PROJECT NO: 2014–300 | SHT. 777 OF 866 | DWG NO. WR–E–002

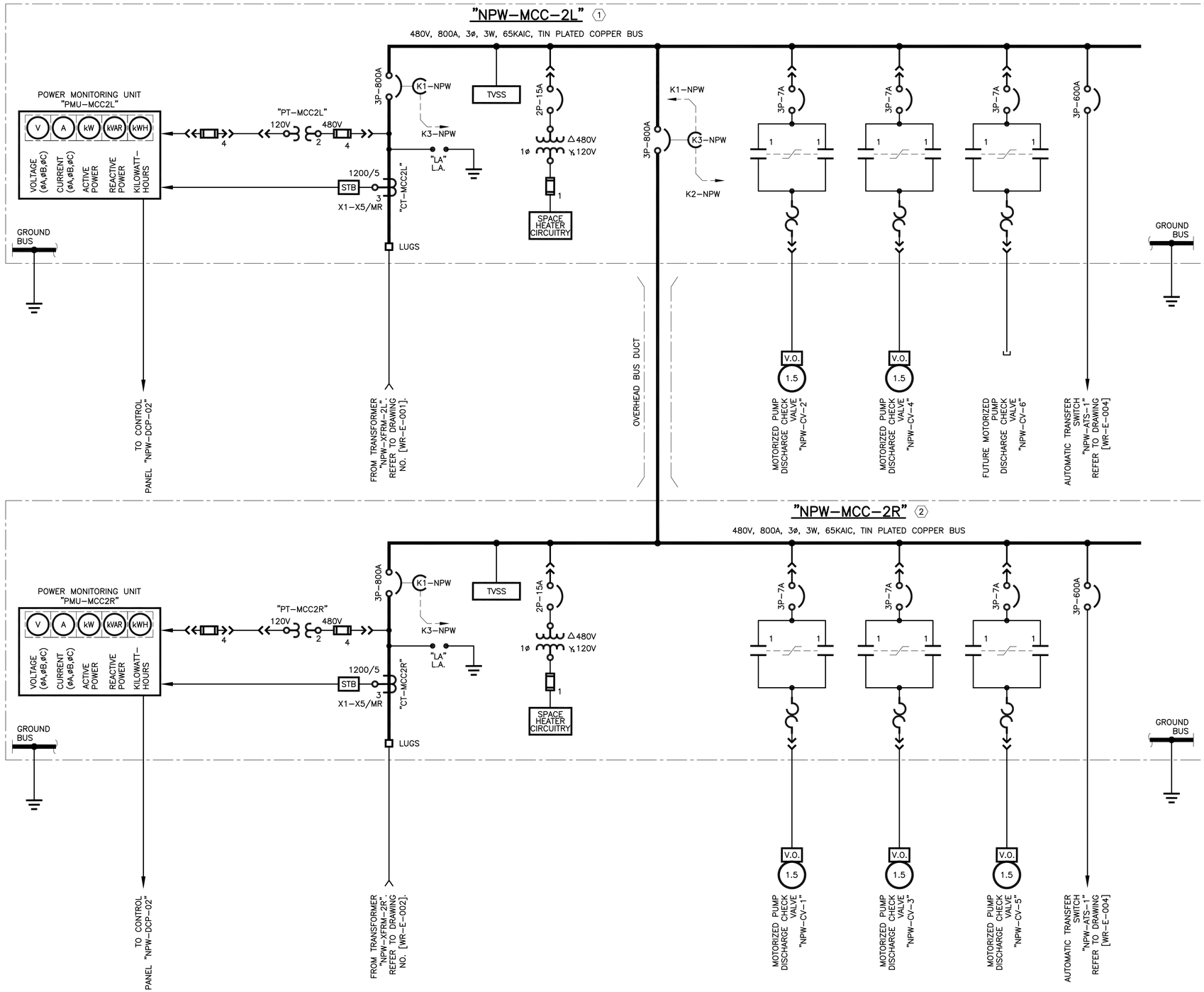

GENERAL NOTES:

1. ALL ELECTRICAL EQUIPMENT, WIRING, CONDUITS, ETC., SHOWN ON THIS DRAWING ARE EXISTING UNLESS NOTED OTHERWISE.
2. THE INFORMATION CONTAINED ON THIS DRAWING WAS OBTAINED FROM INFORMATION AND DRAWINGS THAT WERE PROVIDED BY THE CITY OF AUSTIN. THIS INFORMATION HAS NOT BEEN FIELD VERIFIED.

KEY NOTES:

(1) EXISTING 480V MOTOR CONTROL CENTER MANUFACTURED BY "GE", MODEL "EVOLUTION", REQUISITION NO. "41605009–MC", AND CATALOG NO. "0832X0372L01".

(2) EXISTING 480V MOTOR CONTROL CENTER MANUFACTURED BY "GE", MODEL "EVOLUTION", REQUISITION NO. "41605009–MC", AND CATALOG NO. "0832X0372L02".

NOTE: DRAWING IS INTENDED FOR REFERENCE PURPOSES ONLY.

BAR LENGTH ON ORIGINAL DRAWING EQUALS ONE INCH, ADJUST SCALE ACCORDINGLY.

REUSE OF DOCUMENTS

This document, and the designs incorporated herein, is an instrument of professional service that has been developed, designed and prepared by Harutunian Engineering, Inc., and is not to be used, in whole or in part, for any other project without giving written notice to Harutunian Engineering, Inc.

NO.	DATE:	DESCRIPTION

HARUTUNIAN ENGINEERING INCORPORATED
TEXAS FIRM REGISTRATION NUMBER F–2408
ENGINEERING AND ENVIRONMENTAL CONSULTANTS
8100 CROSS PARK DRIVE
AUSTIN, TEXAS 78754

STATE OF TEXAS
SHANT HARUTUNIAN
87735
REGISTERED
PROFESSIONAL ENGINEER
10/7/2019

DESIGNED BY:	HEI
CHECKED BY:	HEI
APPROVED BY:	HEI
SUBMITTAL DATE:	OCTOBER 2019
SCALE:	AS SHOWN

SOUTH AUSTIN REGIONAL WASTEWATER TREATMENT PLANT
ELECTRICAL SUBSTATION NO. 1 REPLACEMENT PROJECT
CIP I.D.# 3333.032

WATER REUSE
DETAILED ONE–LINE DIAGRAM (SHEET 3 OF 4)

PROJECT NO: 2014–300 | SHT. 778 OF 866 | DWG NO. WR–E–003

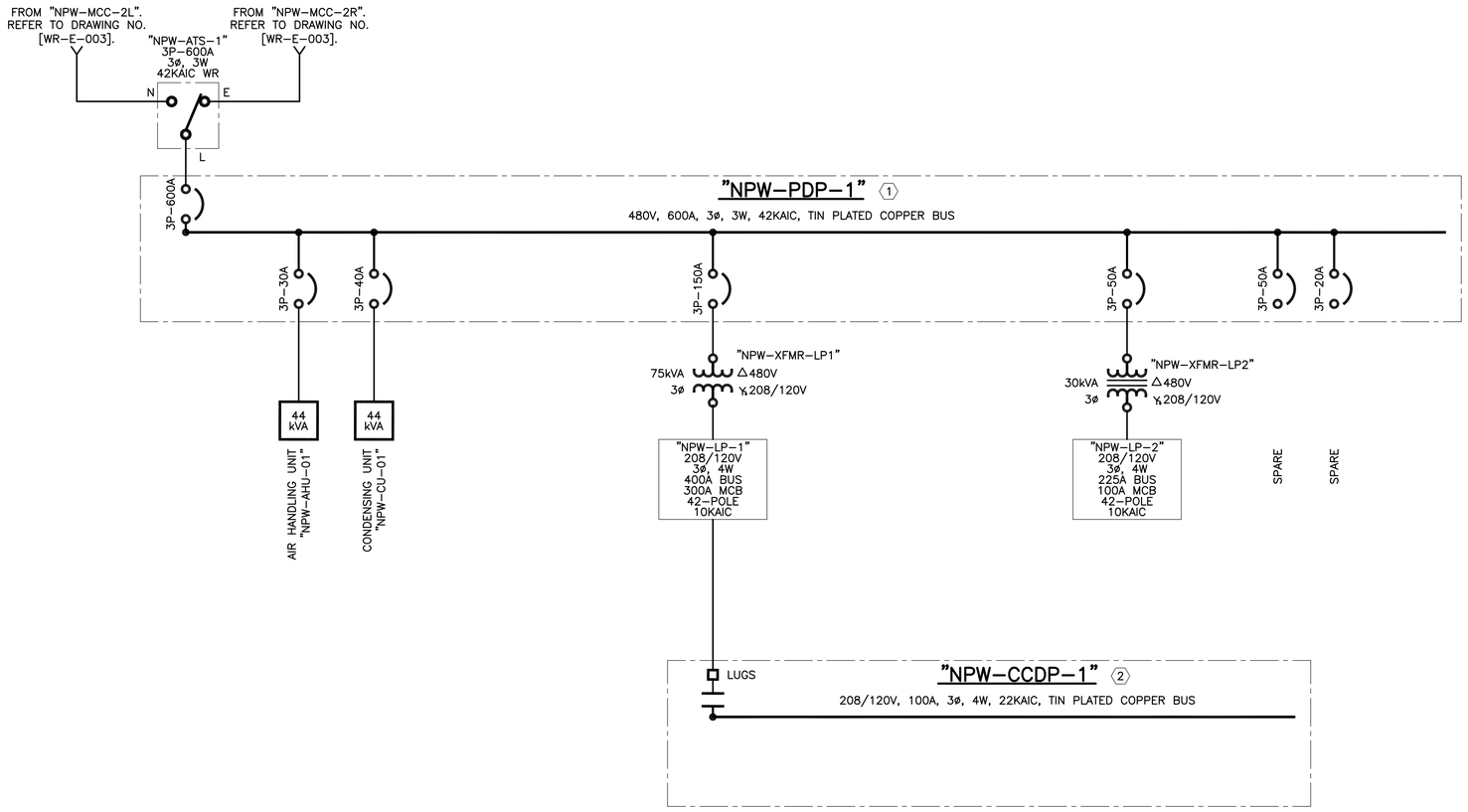

GENERAL NOTES:

1. ALL ELECTRICAL EQUIPMENT, WIRING, CONDUITS, ETC., SHOWN ON THIS DRAWING ARE EXISTING UNLESS NOTED OTHERWISE.
2. THE INFORMATION CONTAINED ON THIS DRAWING WAS OBTAINED FROM INFORMATION AND DRAWINGS THAT WERE PROVIDED BY THE CITY OF AUSTIN. THIS INFORMATION HAS NOT BEEN FIELD VERIFIED.

KEY NOTES:

1. EXISTING 480V POWER DISTRIBUTION PANEL MANUFACTURED BY "GENERAL ELECTRIC", MODEL "TYPE AD", AND PROP NO. "6K1-3V4HQX1".
2. EXISTING 208/120V COMBINATION CONTACTOR DISTRIBUTION PANEL MANUFACTURED BY "GENERAL ELECTRIC", MODEL "TYPE AQ", AND PROP NO. "6K1-3V4HQX1".

NOTE: DRAWING IS INTENDED FOR REFERENCE PURPOSES ONLY.

BAR LENGTH ON ORIGINAL DRAWING EQUALS ONE INCH, ADJUST SCALE ACCORDINGLY.

REUSE OF DOCUMENTS

This document, and the designs incorporated herein, is an instrument of professional service that has been developed, designed and prepared by Harutunian Engineering, Inc., and is not to be used, in whole or in part, for any other project without giving written notice to Harutunian Engineering, Inc.

NO.	DATE:	DESCRIPTION

HARUTUNIAN ENGINEERING INCORPORATED
TEXAS FIRM REGISTRATION NUMBER F-2408
ENGINEERING AND ENVIRONMENTAL CONSULTANTS
8100 CROSS PARK DRIVE
AUSTIN, TEXAS 78754

STATE OF TEXAS
SHANT HARUTUNIAN
87735
REGISTERED
PROFESSIONAL ENGINEER
10/7/2019

DESIGNED BY:	HEI
CHECKED BY:	HEI
APPROVED BY:	HEI
SUBMITTAL DATE:	OCTOBER 2019
SCALE:	AS SHOWN

SOUTH AUSTIN REGIONAL WASTEWATER TREATMENT PLANT
ELECTRICAL SUBSTATION NO. 1 REPLACEMENT PROJECT
CIP I.D.# 3333.032

WATER REUSE

DETAILED ONE-LINE DIAGRAM (SHEET 4 OF 4)

PROJECT NO: 2014-300 | SHT. 779 OF 866 | DWG NO. WR-E-004

GENERAL NOTES:

1. ALL ELECTRICAL EQUIPMENT, WIRING, CONDUITS, ETC., SHOWN ON THIS DRAWING ARE EXISTING UNLESS NOTED OTHERWISE.
2. THE INFORMATION CONTAINED ON THIS DRAWING WAS OBTAINED FROM INFORMATION AND DRAWINGS THAT WERE PROVIDED BY THE CITY OF AUSTIN. THIS INFORMATION HAS NOT BEEN FIELD VERIFIED.

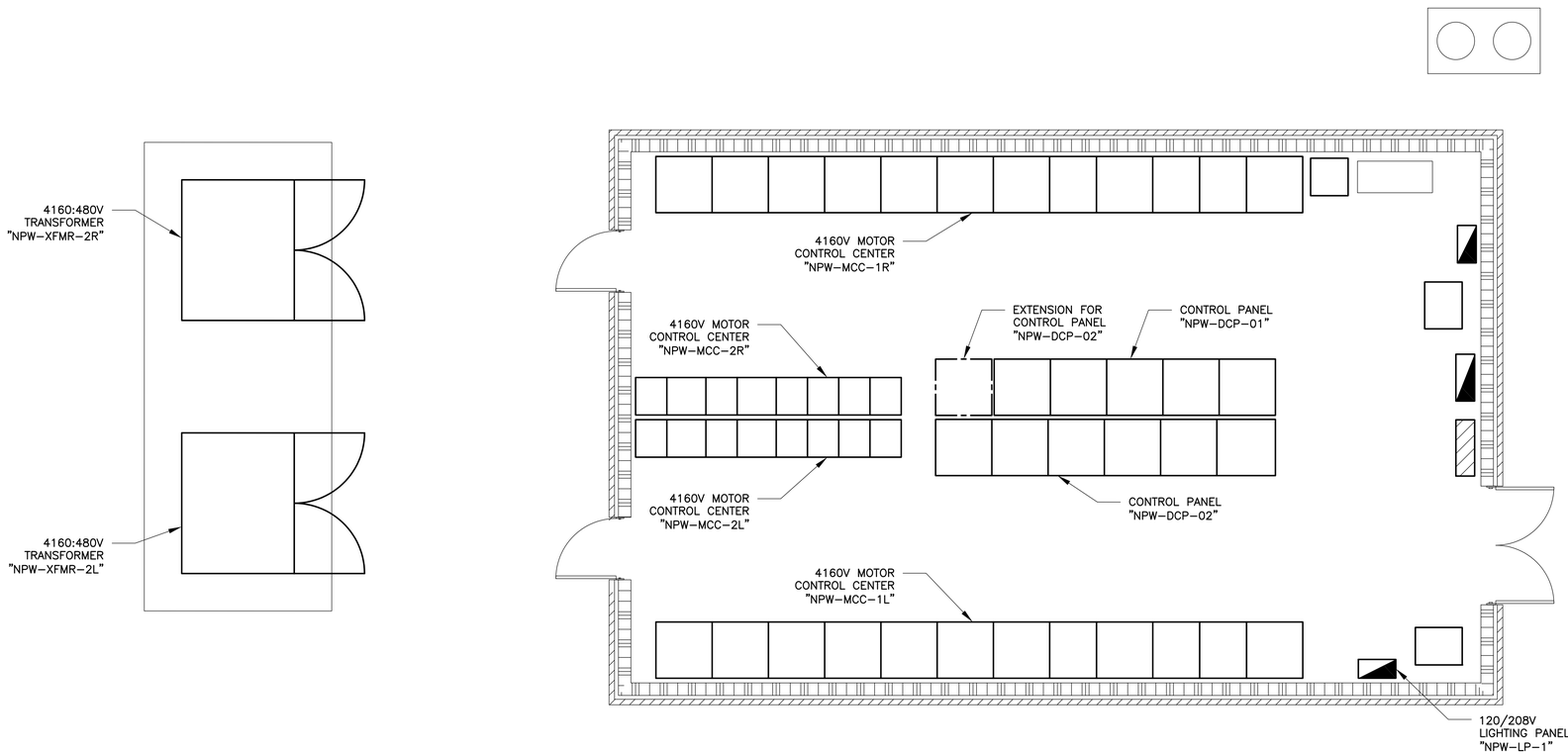

PLANT NORTH

WATER REUSE STATION

SCALE: 1/4" = 1'

NOTE: DRAWING IS INTENDED FOR REFERENCE PURPOSES ONLY.

BAR LENGTH ON ORIGINAL DRAWING EQUALS ONE INCH, ADJUST SCALE ACCORDINGLY.

REUSE OF DOCUMENTS

This document, and the designs incorporated herein, is an instrument of professional service that has been developed, designed and prepared by Harutunian Engineering, Inc., and is not to be used, in whole or in part, for any other project without giving written notice to Harutunian Engineering, Inc.

NO.	DATE:	DESCRIPTION

HARUTUNIAN ENGINEERING INCORPORATED

TEXAS FIRM REGISTRATION NUMBER F–2408

ENGINEERING AND ENVIRONMENTAL CONSULTANTS
8100 CROSS PARK DRIVE
AUSTIN, TEXAS 78754

STATE OF TEXAS · SHANT HARUTUNIAN · 87735 · REGISTERED · PROFESSIONAL ENGINEER
10/7/2019

DESIGNED BY:	HEI
CHECKED BY:	HEI
APPROVED BY:	HEI
SUBMITTAL DATE:	OCTOBER 2019
SCALE:	AS SHOWN

SOUTH AUSTIN REGIONAL WASTEWATER TREATMENT PLANT
ELECTRICAL SUBSTATION NO. 1 REPLACEMENT PROJECT
CIP I.D.# 3333.032

WATER REUSE STATION

EQUIPMENT LOCATION PLAN – EXISTING

PROJECT NO: 2014–300 | SHT. 780 OF 866 | DWG NO. WR–E–005

GENERAL NOTES

1. CONTRACTOR SHALL PROVIDE, ERECT AND MAINTAIN AN 8–FOOT WIDE BY 4–FOOT HIGH SIGN CONSTRUCTED OF ¾–INCH EXTERIOR HIGH DENSITY OVERLAID PLYWOOD PER DETAIL "CIP SIGN" SHOWN ON THIS DRAWING. SIGN TO BEAR THE NAME OF THE PROJECT, OWNER, CONTRACTOR, ENGINEER, AND OTHER PARTICIPATING AGENCIES. LETTERING TO BE BLUE APPLIED ON A WHITE BACKGROUND BY AN EXPERIENCED SIGN PAINTER. PAINT TO BE EXTERIOR TYPE ENAMEL. THE INFORMATION TO BE INCLUDED WILL BE PROVIDED BY THE OWNER FOR APPROVAL. REFER TO SPECIFICATION SECTION 00802S FOR ADDITIONAL INFORMATION.

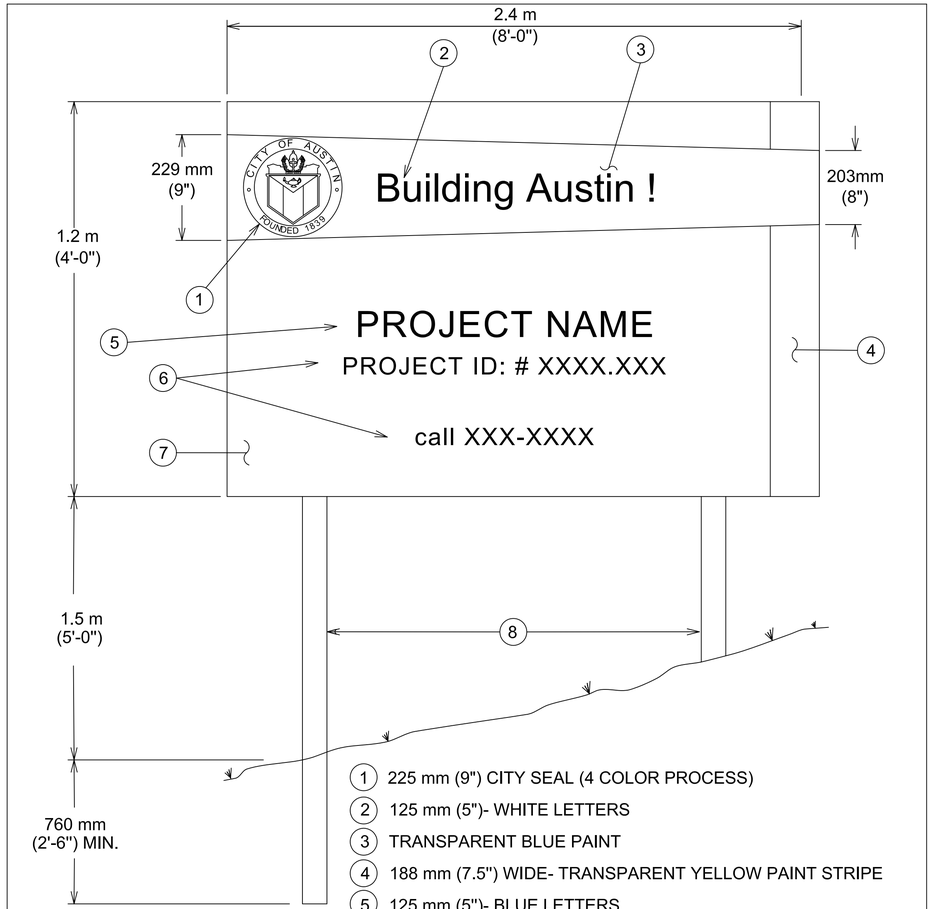

1. 225 mm (9") CITY SEAL (4 COLOR PROCESS)
2. 125 mm (5")- WHITE LETTERS
3. TRANSPARENT BLUE PAINT
4. 188 mm (7.5") WIDE- TRANSPARENT YELLOW PAINT STRIPE
5. 125 mm (5")- BLUE LETTERS
6. 75 mm (3")- BLUE LETTERS
7. WHITE BACKGROUND ON PLYWOOD, NON-REFLECTIVE. PAINT REQUIREMENTS FOR BACKGROUND AND POST, BLUE TONED WHITE 93-21667 CROSS ALLEN OR EQUAL.
8. 100 mm X 100 mm (4"X4") CLASS 6 WOOD POST PAINTED WHITE

NOTES:
1. ALL MATERIALS SHALL BE FURNISHED BY THE CONTRACTOR.
2. IF SIGN IS USED IN PHASED CONSTRUCTION, POSTS SHALL BE MOUNTED ON SKIDS. SEE STANDARD 804S-5, SHEET 5 OF 13.
3. SIGN MUST BE IN COLOR.

CITY OF AUSTIN DEPARTMENT OF PUBLIC WORKS		2.4mx1.2m (8'x4') C.I.P. BUILDING PROJECT SIGN	
RECORD COPY SIGNED BY KERI JUAREZ	01/04/11 ADOPTED	THE ARCHITECT/ENGINEER ASSUMES RESPONSIBILITY FOR APPROPRIATE USE OF THIS STANDARD.	STANDARD NO. 802S-1

CIP SIGN (1 [TD-G-001])
SCALE: N.T.S.

BAR LENGTH ON ORIGINAL DRAWING EQUALS ONE INCH, ADJUST SCALE ACCORDINGLY.

REUSE OF DOCUMENTS

This document, and the designs incorporated herein, is an instrument of professional service that has been developed, designed and prepared by Harutunian Engineering, Inc., and is not to be used, in whole or in part, for any other project without giving written notice to Harutunian Engineering, Inc.

NO.	DATE:	DESCRIPTION

HARUTUNIAN ENGINEERING INCORPORATED
TEXAS FIRM REGISTRATION NUMBER F–2408
ENGINEERING AND ENVIRONMENTAL CONSULTANTS
8100 CROSS PARK DRIVE
AUSTIN, TEXAS 78754

STATE OF TEXAS · SHANT HARUTUNIAN · 87735 · REGISTERED PROFESSIONAL ENGINEER · 10/7/2019

DESIGNED BY:	HEI
CHECKED BY:	HEI
APPROVED BY:	HEI
SUBMITTAL DATE:	OCTOBER 2019
SCALE:	AS SHOWN

SOUTH AUSTIN REGIONAL WASTEWATER TREATMENT PLANT
ELECTRICAL SUBSTATION NO. 1 REPLACEMENT PROJECT
CIP I.D.# 3333.032

CIP SIGN

PROJECT NO: 2014–300 | SHT. 781 OF 866 | DWG NO. TD–G–001

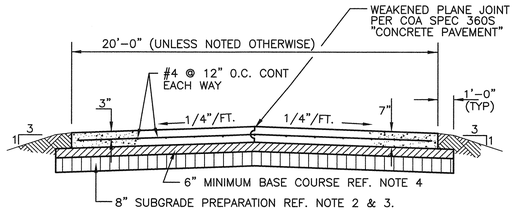

NORMAL CROWN SECTION

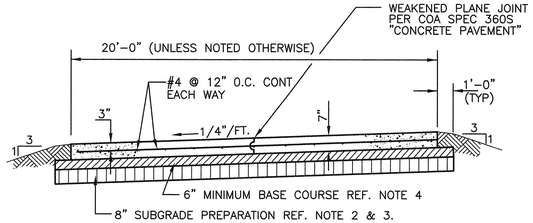

REVERSE CROWN SECTION

ROAD CONSTRUCTION NOTES

1. STRIP THE TOP 4" OF TOP SOIL.
2. SUBGRADE: SCARIFY THE STRIPPED SUBGRADE TO AT LEAST 8", MIX WITH LIME AND BRING WATER TO ± 2% OF OPTIMUM. RECOMPACT TO 95% OF THE MAXIMUM DRY DENSITY USING TxDOT TEST METHOD TEX-114-E OR ASTM D698, PROCEDURE A. A LIME STABILIZED SOIL MIX DESIGN SHALL BE PERFORMED PER COA – TCM 3.2.1A USING TxDOT TEST METHOD TEX-121-E, TO ESTABLISH THE LIME CONTENT THAT WILL PRODUCE A 28 DAY UNCONFINED COMPRESSIVE STRENGTH OF 50 PSI.
3. PROOF ROLL SUBGRADE WITH A MINIMUM OF 2 PASSES OF THE PROOF ROLLER TIRES. EACH SUCCEEDING PASS IS TO BE OFFSET BY NO GREATER THAN ONE TIRE WIDTH. COA SPEC 236S "PROOF ROLLING"
4. BASE COURSE: CRUSHED LIMESTONE FLEXIBLE BASE MEETING THE FOLLOWING REQUIREMENTS. COMPACT THE FLEX BASE TO 100% MAX DRY DENSITY DETERMINED USING TxDOT TEST METHOD TEX-113-E.

RETAINED ON A 1 3/4" SCREEN	0%
RETAINED ON A 7/8" SCREEN	10% – 35%
RETAINED ON A 3/8" SCREEN	30% – 50%
RETAINED ON A #4 SIEVE	45% – 65%
RETAINED ON A #40 SIEVE	70% – 85%
MAXIMUM PLASTICITY INDEX	10
MAXIMUM WET BALL MILL	42
SIEVE FROM WET BALL MILL TEST	20
MINIMUM COMPRESSIVE STRENGTH	35 PSI (0 PSI LAT.)
	175 PSI (15 PSI LAT.)

5. CONTRACTION JOINTS (PER DETAIL 3/TD-C-001) AT MAX SPACING OF 15' O.C.
6. EXPANSION JOINTS AT MAXIMUM SPACING OF 60' O.C.
7. JOINTS AT ROAD CURVES TO BE PERPENDICULAR TO ROADWAY CL THRU CURVE WITH SPACING MEASURED ALONG CL.
8. PAVEMENT INTERSECTIONS AND PARKING AREAS TO INCLUDE DIAGONAL JOINTS AT RADIUS MIDPOINTS TO AVOID PAVEMENT SECTIONS THAT ARE LESS THAN 3' IN ANY DIRECTION.

CONCRETE PAVEMENT DETAILS 1
SCALE: NTS

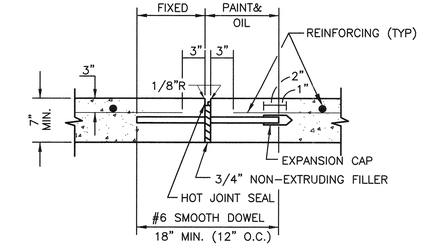

PAVEMENT EXPANSION JOINT DETAIL 2
SCALE: NTS

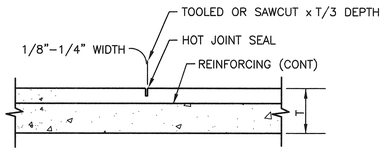

PAVEMENT CONTRACTION JOINT DETAIL 3
SCALE: NTS

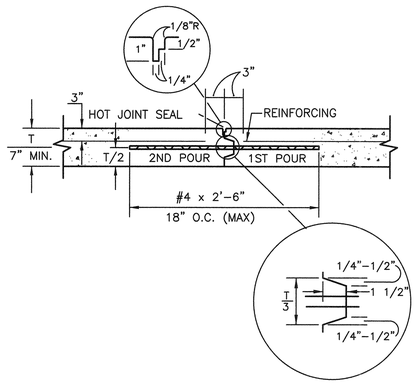

PAVEMENT CONSTRUCTION JOINT DETAIL 4
SCALE: NTS

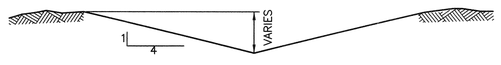

DITCH SECTION DETAIL 5
SCALE: NTS

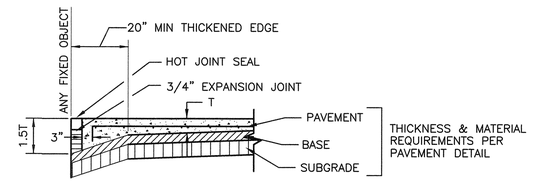

PAVEMENT THICKENED SECTION DETAIL 6
SCALE: NTS

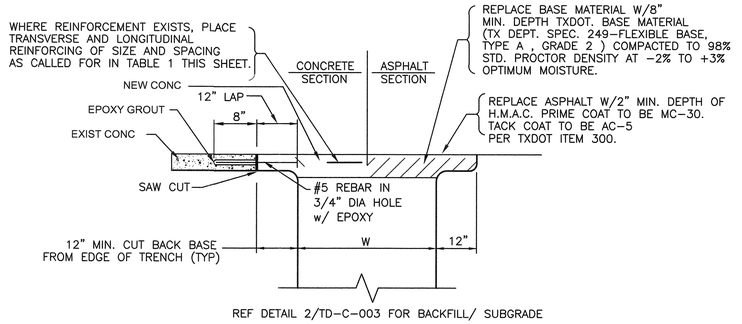

REF DETAIL 2/TD-C-003 FOR BACKFILL/ SUBGRADE

PAVEMENT REPAIR 7
SCALE: NTS

TABLE 1
SLAB DEPTHS & REINFORCING

MIN. DEPTH OF SLAB (IN.)	WIDTH OF TRENCH (IN.) (W)	SIZE OF BAR EACH WAY	SPACING (IN.) EACH WAY
8	18	4	9
8	24	4	8
8	30	4	7
8	30	4	6
10	42	4	8 1/2
10	48	4	7 1/2
10	54	4	7
10	60	4	6 1/2
10	66	5	9
10	72	6	8 1/2
10	78	6	8
10	84	6	7 1/2

E:\605026617 SARWWTP ELEC SUB NO. 1\900-WORKING\DOCS-CAD\910 CADD\20-SHEETS\TD-C-001.DWG BY: GADHIAT DATE: 9/23/2019 10:38 AM

BAR LENGTH ON ORIGINAL DRAWING EQUALS ONE INCH, ADJUST SCALE ACCORDINGLY.

AECOM
AECOM TECHNICAL SERVICES INC.
9400 AMBERGLEN BOULEVARD
AUSTIN, TEXAS 78729
WWW.AECOM.COM
TBPE REG. NO. F-3580

STATE OF TEXAS
TAREK M. REFAI
110484
LICENSED
PROFESSIONAL ENGINEER
9/23/19

NO.	DATE:	DESCRIPTION

HARUTUNIAN ENGINEERING INCORPORATED
TEXAS FIRM REGISTRATION NUMBER F-2408
ENGINEERING AND ENVIRONMENTAL CONSULTANTS
8100 CROSS PARK DRIVE
AUSTIN, TEXAS 78754

REUSE OF DOCUMENTS
This document, and the designs incorporated herein, is an instrument of professional service that has been developed, designed and prepared by Harutunian Engineering, Inc., and is not to be used, in whole or in part, for any other project without giving written notice to Harutunian Engineering, Inc.

DESIGNED BY:	TMF
CHECKED BY:	JNB
APPROVED BY:	SGE
SUBMITTAL DATE:	OCTOBER 2019
SCALE:	AS NOTED

SOUTH AUSTIN REGIONAL WASTEWATER TREATMENT PLANT
ELECTRICAL SUBSTATION NO. 1 REPLACEMENT PROJECT
CIP I.D.# 3333.032

STANDARD CIVIL DETAILS – SHEET 1

PROJECT NO: 2014-300 | SHT. 782 OF 866 | DWG NO. TD-C-001

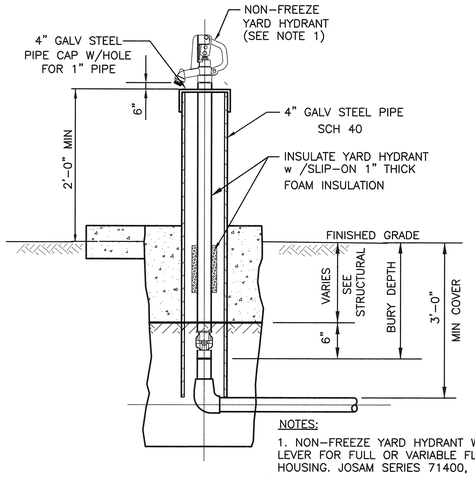

NOTES:

1. NON-FREEZE YARD HYDRANT WITH CAST IRON HEAD. CAM-TYPE OPERATING CONTROL LEVER FOR FULL OR VARIABLE FLOW. HYDRANT IS EQUIPPED WITH DRAIN PORT IN VALVE HOUSING. JOSAM SERIES 71400, ZURN Z1395, OR EQUAL.

NON-FREEZE YARD HYDRANT DETAIL 1

SCALE: NTS

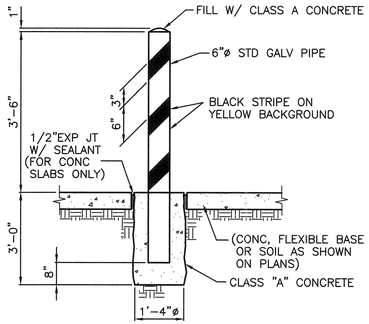

TYPE A

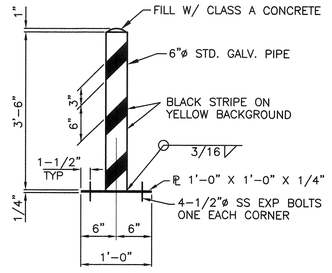

TYPE B

(MUST BE APPROVED BY ENGINEER)

BOLLARD DETAIL 2

SCALE: NTS

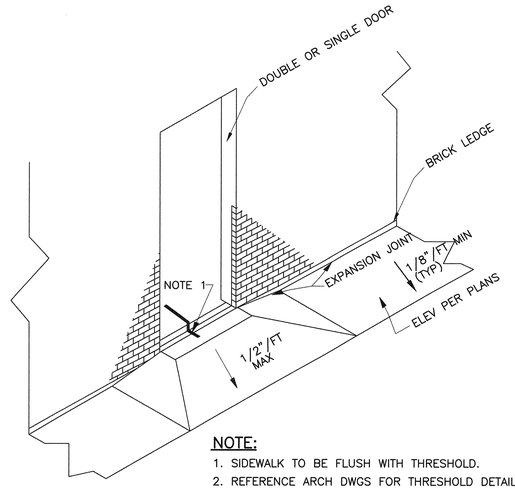

NOTE:

1. SIDEWALK TO BE FLUSH WITH THRESHOLD.
2. REFERENCE ARCH DWGS FOR THRESHOLD DETAIL.

SIDEWALK AT DOOR DETAIL 3

SCALE: NTS

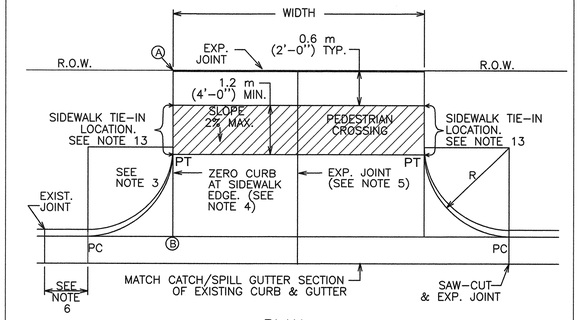

PLAN

NOTE: ALL DRIVEWAYS SHALL BE SLOPED TOWARDS THE STREET FROM THE R.O.W. LINE. ELEVATION OF POINT Ⓐ ABOVE POINT Ⓑ IS, TYPICALLY A MINIMUM OF 150 mm (6") PLUS 20 mm/m (1/4" RISE/FOOT) OVER DISTANCE "X" IN METERS (FEET).

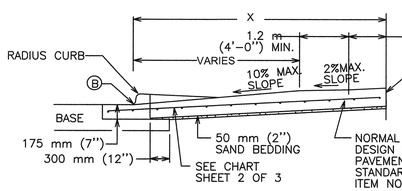

CROSS SECTION

CITY OF AUSTIN DEPARTMENT OF PUBLIC WORKS		TYPE II DRIVEWAY	
RECORD COPY SIGNED BY CUONG TRAN	*02/24/10* ADOPTED	THE ARCHITECT/ENGINEER ASSUMES RESPONSIBILITY FOR APPROPRIATE USE OF THIS STANDARD.	STANDARD NO. 433S-2 1 OF 2

USE	THICKNESS	REINFORCEMENT
DRIVEWAYS FOR PASSENGER VEHICLE PARKING LOTS	150 mm (6") MIN.	125 mm (5") MIN. CONCRETE WITH ONE LAYER OF13M (#4) BARS PLACED ON CHAIRS AT MIDDEPTH OF SLAB AT NO MORE THAN 450 mm (18") O.C. BOTH DIRECTIONS
ALL OTHERS	175 mm (7") MIN.	125 mm (5") MIN. CONCRETE WITH ONE LAYER OF13M (#4) BARS PLACED ON CHAIRS AT MIDDEPTH OF SLAB AT NO MORE THAN 450 mm (18") O.C. BOTH DIRECTIONS

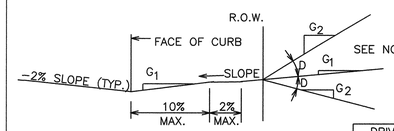

ALLOWABLE GRADES

DRIVEWAY VOLUME (ADT)	D=GRADE CHANGE STD.	MAX
>1500	0%	3%
500-1500	3%	6%
< 500	6%	15%

NOTES:

1. ALL TYPE II DRIVEWAYS SHALL HAVE RADIUS ENDS.
2. DRIVEWAY WIDTHS AND RADII DIMENSIONS, ONE/TWO WAY TRAVEL REQUIREMENTS, AND GEOMETRIC LAY-OUT ARE HIGHLY VARIABLE, SUBJECT TO SITE SPECIFIC CONDITIONS AND REQUIREMENTS. SEE TRANSPORTATION CRITERIA MANUAL. SECTION 5 "DRIVEWAYS".
3. THE DRIVEWAY EDGE SHALL BE SMOOTHLY TRANSITITIONED INTO THE SIDEWALK TIE-IN LOCATION BEGINNING AT THE RADIUS PC LINE.
4. "ZERO" CURB AT PT OR SIDEWALK EDGE, WHICHEVER IS ENCOUNTERED FIRST.
5. PLACE AN EXPANSION JOINT DOWN THE CENTER OF DRIVEWAY ALL DRIVEWAYS.
6. IF DIMENSION IS LESS THAN 1.5 METERS (5 FEET), REMOVE CURB AND GUTTER TO EXISTING JOINT AND POUR MONOLITHICALLY WITH DRIVEWAY.
7. IF THE BASE IS OVER-EXCAVATED WHERE THE CURB AND GUTTER WERE REMOVED, BACKFILL WITH CONCRETE MONOLITHICALLY WITH THE DRIVEWAY.
8. TYPE II DRIVEWAYS ARE TO BE LOCATED NO CLOSER TO THE CORNER OF INTERSECTING RIGHT OF WAY THAN 60% OF PARCEL FRONTAGE AT 30 METERS (100 FEET): WHICHEVER IS LESS.
9. DRIVEWAY SHALL NOT BE CONSTRUCTED WITHIN THE CURB RETURN OF A STREET INTERSECTION.
10. WHILE THE PROPERTY OWNER REMAINS RESPONSIBLE FOR GRADE BREAKS WITHIN PRIVATE PROPERTY, THE FIRE DEPARTMENT SHALL BE CONSULTED WHERE THE DRIVEWAY IS ESSENTIAL TO EMERGENCY VEHICLE ACCESS AND "G2 IS GREATER THAN 15%.
11. USE 12 MM (1/2") ASPHALT BOARD OR OTHER APPROVED MATERIAL FOR CURB AND GUTTER EXPANSION JOINTS. SIDEWALK, AT THE R.O.W. LINE AND AT MIDWIDTH, SEE NOTE 5.
12. SEE TRANSPORTATION CRITERIA MANUAL, SECTION 5 FOR OTHER DRIVEWAY REQUIREMENTS.
13. THE SIDEWALK, REGARDLESS OF ITS LOCATION WITH RESPECT TO THE CURB OR PROPERTY LINE, SHALL BE CONNECTED TO THE DRIVEWAY AT THESE LOCATIONS.
14. WATER METER BOXES AND WASTEWATER CLEAN OUTS ARE PROHIBITED FROM BEING LOCATED IN DRIVEWAY AREAS.

CITY OF AUSTIN DEPARTMENT OF PUBLIC WORKS		TYPE II DRIVEWAY	
RECORD COPY SIGNED BY CUONG TRAN	*02/24/10* ADOPTED	THE ARCHITECT/ENGINEER ASSUMES RESPONSIBILITY FOR APPROPRIATE USE OF THIS STANDARD.	STANDARD NO. 433S-2 2 OF 2

DRIVEWAY 4

SCALE: NTS

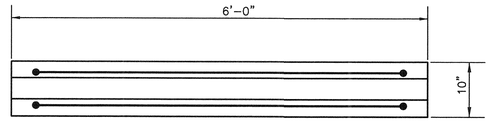

PLAN

SHOWING DIMENSIONS

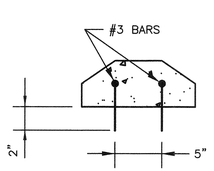

CROSS SECTION

SHOWING STEEL

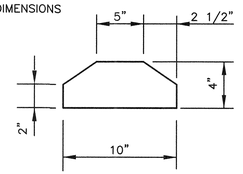

END VIEW

SHOWING DIMENSIONS

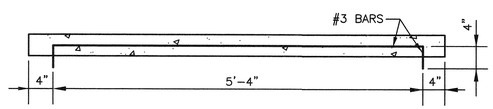

LONGITUDINAL SECTION

SHOWING STEEL

NOTE: ALL CONCRETE TO BE CLASS A

TIRE STOP DETAIL 6

SCALE: NTS

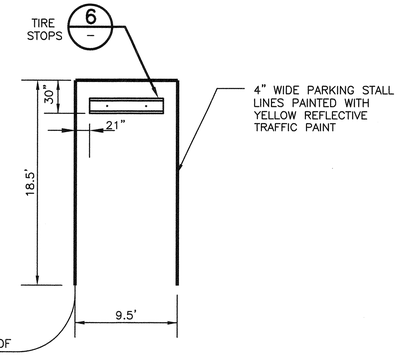

NOTE:

1. DETAIL REPRESENTS TYPICAL STALL LAYOUT. NUMBER AND TYPE OF STALLS ARE SHOWN ON SITE PLAN.

SINGLE PARKING STALL LAYOUT 5

SCALE: NTS

E:\605\2\5617 SARWTP ELEC SUB NO. 1\900\WORKINGDOCS-CAD\910 CADD\20-SHEETS\TD-C-002.DWG BY: GADHIAT DATE: 9/18/2019 11:41 AM

BAR LENGTH ON ORIGINAL DRAWING EQUALS ONE INCH, ADJUST SCALE ACCORDINGLY.

AECOM
AECOM TECHNICAL SERVICES INC.
9400 AMBERGLEN BOULEVARD
AUSTIN, TEXAS 78729
WWW.AECOM.COM
TBPE REG. NO. F-3580

STATE OF TEXAS
CASEY G. WAUTERS
93889
LICENSED
PROFESSIONAL ENGINEER
9/23/19

NO.	DATE:	DESCRIPTION

HARUTUNIAN ENGINEERING INCORPORATED
TEXAS FIRM REGISTRATION NUMBER F-2408
ENGINEERING AND ENVIRONMENTAL CONSULTANTS
8100 CROSS PARK DRIVE
AUSTIN, TEXAS 78754

REUSE OF DOCUMENTS
This document, and the designs incorporated herein, is an instrument of professional service that has been developed, designed and prepared by Harutunian Engineering, Inc., and is not to be used, in whole or in part, for any other project without giving written notice to Harutunian Engineering, Inc.

DESIGNED BY:	CW
CHECKED BY:	JNB
APPROVED BY:	SGE
SUBMITTAL DATE:	OCTOBER 2019
SCALE:	AS NOTED

SOUTH AUSTIN REGIONAL WASTEWATER TREATMENT PLANT
ELECTRICAL SUBSTATION NO. 1 REPLACEMENT PROJECT
CIP I.D.# 3333.032

STANDARD CIVIL DETAILS – SHEET 2

PROJECT NO: 2014-300 | SHT. 783 OF 866 | DWG NO. TD-C-002

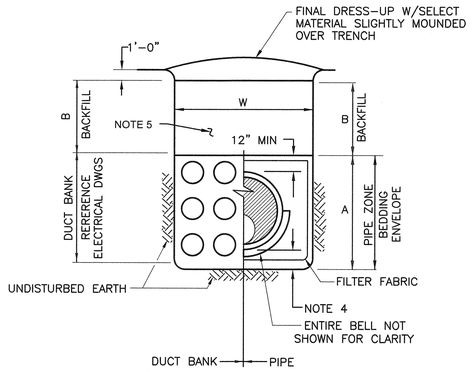

TYPICAL BACKFILL FOR UNPAVED AREAS — 1

SCALE: NTS

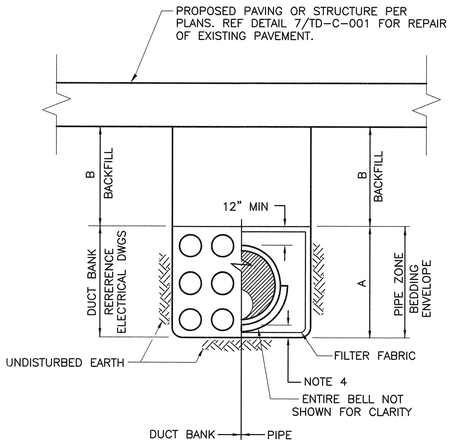

TYPICAL BACKFILL FOR PAVED AREAS AND BELOW STRUCTURES — 2

SCALE: NTS

BEDDING & BACKFILL NOTES:

PIPE ZONE (A):

1. FOR PIPE SIZES HAVING AN INSIDE DIAMETER OF 15 INCHES OR LESS, FINE AGGREGATE TO BE USED AS BEDDING MATERIAL. THE FINE AGGREGATE BEDDING SAND SHOULD BE "CLEAN GRANULAR, AND HOMOGENEOUS, COMPOSED MAINLY OF MINERAL MATTER, FREE OF MUD, SILT, CLAY LUMPS OR CLODS, VEGETATION OR DEBRIS". SIZE GRADATION SHALL CONFORM TO THE FOLLOWING:

FINE AGGREGATE	
SIEVE SIZE	% PASSING
1/4" INCH	100
No. 60	0 – 25
No. 100	0 – 5

2. FOR PIPE SIZES HAVING AN INSIDE DIAMETER GREATER THAN 15 INCHES, THE BEDDING MATERIAL IS TO BE CRUSHED LIMESTONE, FREE OF MUD, CLAY, VEGETATION, OR OTHER DEBRIS, CONFORMING TO ASTM C33 FOR STONE QUALITY. SIZE GRADATION SHALL CONFORM TO ASTM C33 No. 57 OR No. 67 OR THE FOLLOWING TABLE:

COARSE AGGREGATE	
SIEVE SIZE	% PASSING
1 1/2 INCH	100
1 INCH	90 – 100
1/2 INCH	15 – 60
No. 4	0 – 10
No. 8	0 – 5

3. BEDDING ENVELOPE TO BE PLACED IN A DRY CONDITION AND VIBRATED IN PLACE TO A RELATIVE DENSITY OF 70%. MINIMUM DRY DENSITY TO BE DETERMINED USING ASTM D4254 TEST METHOD B. MINIMUM DRY DENSITY PER ASTM D4253, TEST METHOD 1A OR 2A. IF A VIBRATION TABLE IS NOT AVAILABLE, TXDOT TEST METHOD TEX-113-E CAN BE USED TO DETERMINE MAXIMUM DRY DENSITY IN LIEU OF ASTM D4253.

4. THE DEPTH OF THE GRANULAR EMBEDMENT BELOW THE OUTSIDE BOTTOM OF THE PIPE TO BE AS INDICATED BELOW:

PIPE SIZE	ON SOIL	ON ROCK
27" AND SMALLER	3"	6"
30" TO 60"	4"	9"
66" AND LARGER	6"	12"

BACKFILL (B):

5. BACKFILL TO BE MATERIAL CONFORMING TO COA SPECIFICATION 510 "PIPE". MATERIAL SPECIFICATION AND PLACEMENT REQUIREMENTS TO CONFORM TO THIS SPECIFICATION. BACKFILL SHALL BE PLACED FROM THE TOP OF THE BEDDING MATERIAL TO THE EXISTING GRADE, BASE COURSE, SUBGRADE OR AS INDICATED.

TRENCH WIDTHS (W):

6. THE MINIMUM TRENCH WIDTH (W) TO BE AS FOLLOWS:

PIPE LESS THAN 30-INCH	PIPE 31-INCH & LARGER
2'-0" + PIPE O.D. (MIN)	3'-0" + PIPE O.D. (MIN)

7. MAXIMUM TRENCH WIDTH IS UNLIMITED.

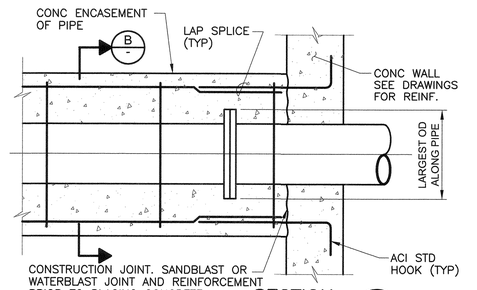

SECTION A

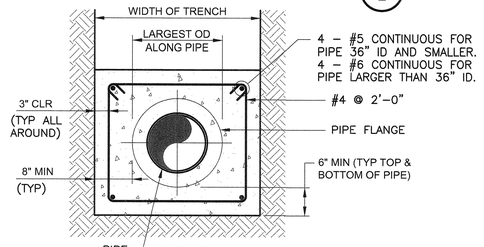

SECTION B

NOTES:

1. TYPE OF PIPE AND TYPE OF PIPE JOINT OR COUPLER AS INDICATED ON THE DRAWINGS.
2. WHERE THE PIPE AND ENCASEMENT EXTENDS OUT FROM UNDER A STRUCTURE, THE BOTTOM EDGE OF THE END OF THE ENCASEMENT SHOULD LIE OUTSIDE A 1 TO 1 LINE DOWN FROM THE BOTTOM EDGE OF THE FOUNDATION.

CONCRETE ENCASEMENT OF PIPE — 3

SCALE: NTS

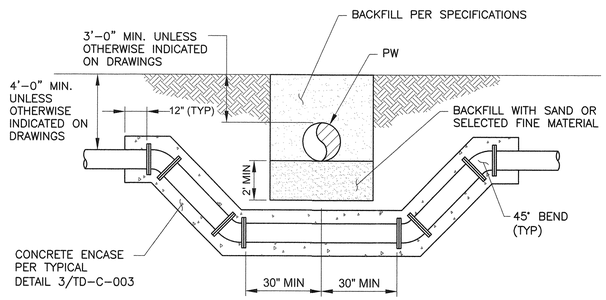

PRESSURE SEWER–WATERLINE INTERSECTION — 4

SCALE: NTS

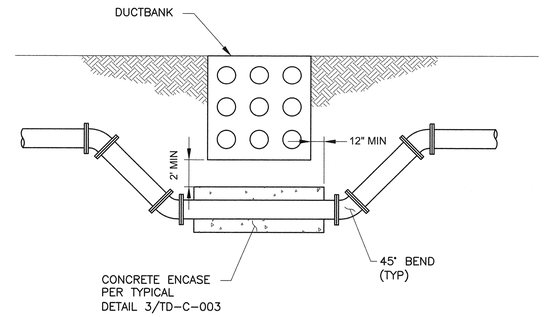

PIPE–DUCTBANK INTERSECTION — 5

SCALE: NTS

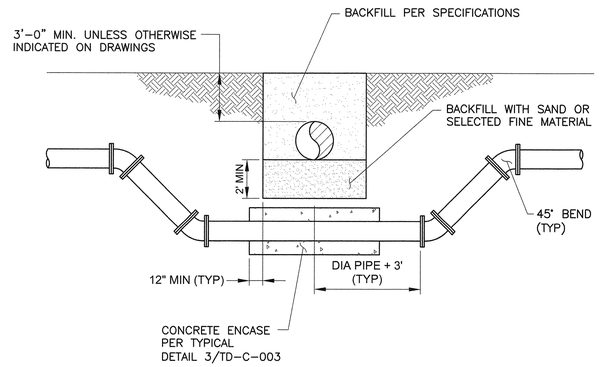

GENERAL PIPE–PIPE INTERSECTION — 6

SCALE: NTS

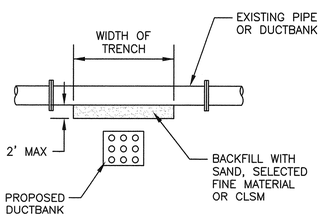

NOTE:

1. CONTRACTOR SHALL SUPPORT EXISTING UTILITY DURING EXCAVATION FOR DUCTBANK INSTALLATION BELOW.

CROSSING BELOW EXISTING UTILITY — 7

SCALE: NTS

E:\60026617 SARWWTP ELEC SUB NO. 1\900-WORKING\DOCS-CAD\910 CADD\20-SHEETS\TD-C-003.DWG BY: GADHAT DATE: 9/18/2019 11:40 AM

BAR LENGTH ON ORIGINAL DRAWING EQUALS ONE INCH, ADJUST SCALE ACCORDINGLY.

AECOM TECHNICAL SERVICES INC.
9400 AMBERGLEN BOULEVARD
AUSTIN, TEXAS 78729
WWW.AECOM.COM
TBPE REG. NO. F-3580

STATE OF TEXAS — CASEY G. WAUTERS — 93889 — LICENSED PROFESSIONAL ENGINEER — 9/23/19

NO.	DATE:	DESCRIPTION

HARUTUNIAN ENGINEERING INCORPORATED
TEXAS FIRM REGISTRATION NUMBER F-2408
ENGINEERING AND ENVIRONMENTAL CONSULTANTS
8100 CROSS PARK DRIVE
AUSTIN, TEXAS 78754

REUSE OF DOCUMENTS

This document, and the designs incorporated herein, is an instrument of professional service that has been developed, designed and prepared by Harutunian Engineering, Inc., and is not to be used, in whole or in part, for any other project without giving written notice to Harutunian Engineering, Inc.

DESIGNED BY:	CW
CHECKED BY:	JNB
APPROVED BY:	SGE
SUBMITTAL DATE:	OCTOBER 2019
SCALE:	AS NOTED

SOUTH AUSTIN REGIONAL WASTEWATER TREATMENT PLANT
ELECTRICAL SUBSTATION NO. 1 REPLACEMENT PROJECT
CIP I.D.# 3333.032

STANDARD CIVIL DETAILS – SHEET 3

PROJECT NO: 2014-300 | SHT. 784 OF 866 | DWG NO. TD-C-003

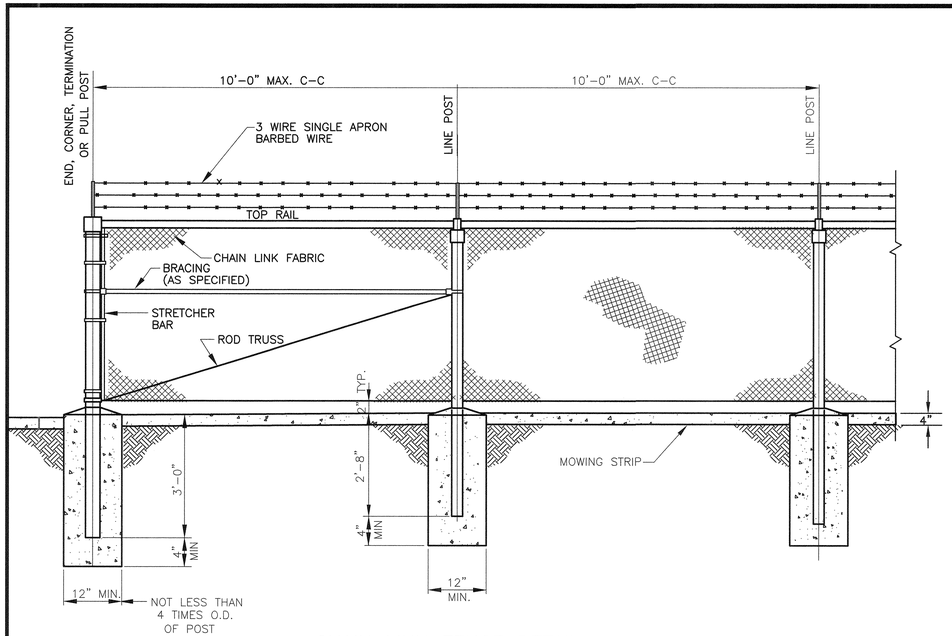

CHAIN LINK FENCE DETAIL 1

SCALE: NTS

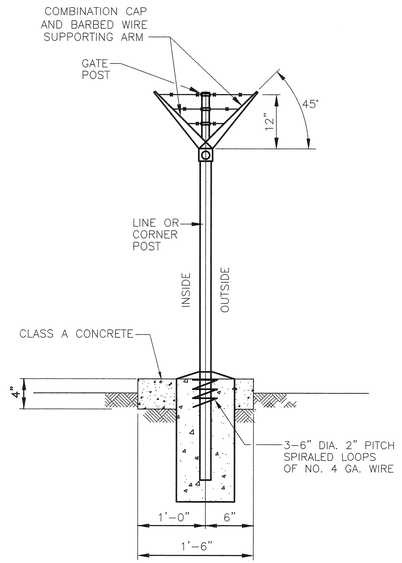

* POST TO BE SET 24" INSIDE PROPERTY WHEN ADJACENT TO PROPERTY LINE

FENCE POST DETAIL w/MOWING STRIP 2

SCALE: NTS

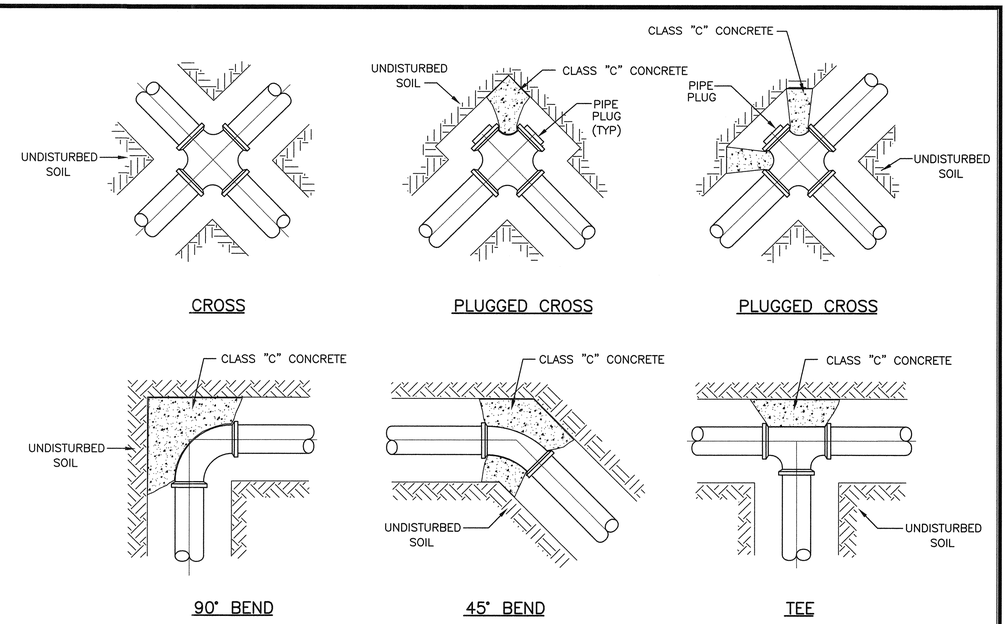

TYPICAL THRUST BLOCK CONFIGURATION 3

SCALE: NTS

NOTE:

1. REFERENCE PIPING PROFILES AND SPECIFICATIONS FOR BEARING AREA REQUIREMENTS.

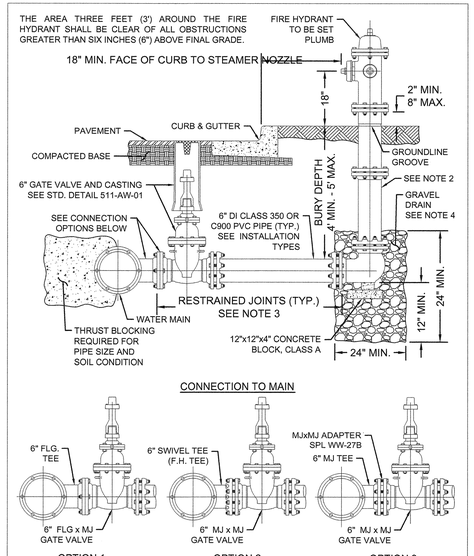

CITY OF AUSTIN AUSTIN WATER		FIRE HYDRANT	
RECORD COPY SIGNED BY KATHI L FLOWERS	*05/18/2016* ADOPTED	THE ARCHITECT/ENGINEER ASSUMES RESPONSIBILITY FOR APPROPRIATE USE OF THIS STANDARD.	STANDARD NO. 511-AW-02 1 OF 3

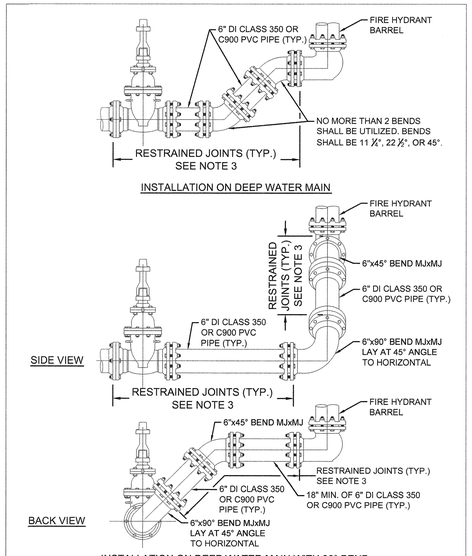

CITY OF AUSTIN AUSTIN WATER		FIRE HYDRANT	
RECORD COPY SIGNED BY KATHI L FLOWERS	*05/18/2016* ADOPTED	THE ARCHITECT/ENGINEER ASSUMES RESPONSIBILITY FOR APPROPRIATE USE OF THIS STANDARD.	STANDARD NO. 511-AW-02 2 OF 3

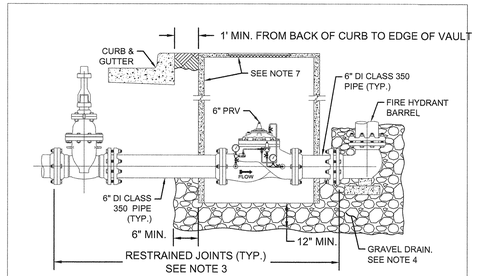

NOTES: APPLICABLE TO ALL INSTALLATION TYPES.

1. NO PART OF A HYDRANT OR ITS NOZZLE CAPS SHALL BE WITHIN 6" OF ANY SIDEWALK OR PEDESTRIAN RAMP. ANY FIRE HYDRANT PLACED NEAR A STREET CORNER SHALL BE LOCATED OUTSIDE THE CURVE RADIUS AND A MINIMUM OF 4' FROM RAMPS.
2. ONE BARREL EXTENSION NOT EXCEEDING 2' LENGTH MAY BE INSTALLED DIRECTLY BELOW THE FIRE HYDRANT IN ORDER TO MEET THE REQUIRED BURY DEPTH OF 4' - 5'. BREAK AWAY BOLTS (SHOE TYPES) SHALL BE PROPERLY SPACED AND PLACED.
3. FIRE LINE SHALL HAVE ALL JOINTS RESTRAINED FROM MAIN TO FIRE HYDRANT. JOINTS SHOWN MAY VARY. SEE SPL WW-27, WW-27A, AND WW-27B FOR RESTRAINT OPTIONS.
4. BELOW EACH HYDRANT, A DRAINAGE PIT 24" IN DIAMETER AND 12" DEEP SHALL BE EXCAVATED AND FILLED WITH COMPACTED COARSE GRAVEL OR BROKEN STONE MIXED WITH COARSE SAND UNDER AND AROUND THE BOWL OF THE HYDRANT, AND TO A LEVEL 12" ABOVE THE HYDRANT DRAIN OPENING (SEE STD. SPEC. 510). THE HYDRANT DRAINAGE PIT SHALL NOT BE CONNECTED TO A SANITARY SEWER. THE DRAIN GRAVEL SHALL BE COVERED WITH FILTER FABRIC PER STD. SPEC. 620S. FOR PRV, GRAVEL SHALL EXTEND UNDER THE PRV VAULT 12" MIN. DEPTH UNDER THE VAULT AND 6" MIN. BEYOND VAULT.
5. FOR FIRE HYDRANT LEADS AT A MAIN OUTLET LARGER THAN 6" DIAMETER, OUTLET SHALL BE FLANGED AND A FLG x FLG REDUCER SHALL BE INSTALLED DIRECTLY ON THE OUTLET.
6. WRAP 8 MIL. POLY-FILM WRAP ON ALL BURIED PIPE AND FITTINGS.
7. FOR HYDRANTS WITH PRV: CLASS III RCP VAULT 60" MIN. I.D. WITH REINFORCED PRECAST CONCRETE LID (AASHTO H-20 LOADING) WITH COA FRAME AND 32" COVER WITH LETTERING MODIFIED FOR WATER.

CITY OF AUSTIN AUSTIN WATER		FIRE HYDRANT	
RECORD COPY SIGNED BY KATHI L FLOWERS	*05/18/2016* ADOPTED	THE ARCHITECT/ENGINEER ASSUMES RESPONSIBILITY FOR APPROPRIATE USE OF THIS STANDARD.	STANDARD NO. 511-AW-02 3 OF 3

FIRE HYDRANT DETAIL 4

SCALE: NTS

BAR LENGTH ON ORIGINAL DRAWING EQUALS ONE INCH, ADJUST SCALE ACCORDINGLY.

AECOM TECHNICAL SERVICES INC.
9400 AMBERGLEN BOULEVARD
AUSTIN, TEXAS 78729
WWW.AECOM.COM
TBPE REG. NO. F-3580

STATE OF TEXAS
CASEY G. WAUTERS
93889
LICENSED PROFESSIONAL ENGINEER
9/23/19

NO.	DATE:	DESCRIPTION

HARUTUNIAN ENGINEERING INCORPORATED
TEXAS FIRM REGISTRATION NUMBER F-2408
ENGINEERING AND ENVIRONMENTAL CONSULTANTS
8100 CROSS PARK DRIVE
AUSTIN, TEXAS 78754

REUSE OF DOCUMENTS
This document, and the designs incorporated herein, is an instrument of professional service that has been developed, designed and prepared by Harutunian Engineering, Inc., and is not to be used, in whole or in part, for any other project without giving written notice to Harutunian Engineering, Inc.

DESIGNED BY:	CW
CHECKED BY:	JNB
APPROVED BY:	SGE
SUBMITTAL DATE:	OCTOBER 2019
SCALE:	AS NOTED

SOUTH AUSTIN REGIONAL WASTEWATER TREATMENT PLANT
ELECTRICAL SUBSTATION NO. 1 REPLACEMENT PROJECT
CIP I.D.# 3333.032

STANDARD CIVIL DETAILS – SHEET 4

PROJECT NO: 2014-300 | SHT. 785 OF 866 | DWG NO. TD-C-004

E:\60526617 SARWWTP ELEC SUB NO. 1\900-WORKINGDOCS-CAD\910 CAD\20-SHEETS\STD-C-004.DWG BY: GADHIAT DATE: 9/18/2019 11:36 AM

CITY OF AUSTIN — STANDARD NOTES
EROSION AND SEDIMENTATION CONTROL

1. THE CONTRACTOR SHALL INSTALL EROSION/SEDIMENTATION CONTROLS AND TREE/NATURAL AREA PROTECTIVE FENCING PRIOR TO ANY SITE PREPARATION WORK (CLEARING, GRUBBING, OR EXCAVATION).

2. THE PLACEMENT OF EROSION/SEDIMENTATION CONTROLS SHALL BE IN ACCORDANCE WITH THE ENVIRONMENTAL CRITERIA MANUAL AND THE APPROVED EROSION AND SEDIMENTATION CONTROL PLAN.

3. THE PLACEMENT OF TREE/NATURAL AREA PROTECTIVE FENCING SHALL BE IN ACCORDANCE WITH THE CITY OF AUSTIN STANDARD NOTES FOR TREE AND NATURAL AREA PROTECTION AND THE APPROVED GRADING/TREE AND NATURAL AREA PLAN.

4. A PRE—CONSTRUCTION CONFERENCE SHALL BE HELD ON—SITE WITH THE CONTRACTOR, DESIGN ENGINEER, PERMIT APPLICANT, AND ENVIRONMENTAL INSPECTOR AFTER INSTALLATION OF THE EROSION/SEDIMENTATION CONTROLS AND THE TREE/NATURAL AREA PROTECTION MEASURES AND PRIOR TO BEGINNING ANY SITE PREPARATION WORK. THE CONTRACTOR SHALL NOTIFY THE DEVELOPMENT SERVICES DEPARTMENT AT 512/974—2278, AT LEAST 3 DAYS PRIOR TO THE MEETING DATE.

5. ANY SIGNIFICANT VARIATION IN MATERIALS OR LOCATIONS OF CONTROLS OR FENCES FROM THOSE SHOWN ON THE APPROVED PLANS MUST BE APPROVED BY THE REVIEWING ENGINEER AND THE GENERAL PERMIT PROGRAM REPRESENTATIVE.

6. THE CONTRACTOR IS REQUIRED TO INSPECT THE CONTROLS AND FENCES AT DAILY INTERVALS AND AFTER SIGNIFICANT RAINFALL EVENTS TO INSURE THAT THEY ARE FUNCTIONING PROPERLY. THE PERSON(S) RESPONSIBLE FOR MAINTENANCE OF CONTROLS AND FENCES SHALL IMMEDIATELY MAKE ANY NECESSARY REPAIRS TO DAMAGED AREAS. SILT ACCUMULATION AT CONTROLS MUST BE REMOVED WHEN THE DEPTH REACHES SIX (6) INCHES. SILT ACCUMULATION AT INLET DEVICES SHOULD BE REMOVED WHEN THE DEPTH REACHES TWO (2) INCHES.

7. PRIOR TO FINAL ACCEPTANCE BY THE CITY, HAUL ROADS AND WATERWAY CROSSINGS CONSTRUCTED FOR TEMPORARY CONTRACTOR ACCESS MUST BE REMOVED, ACCUMULATED SEDIMENT REMOVED FROM THE WATERWAY AND THE AREA RESTORED TO THE ORIGINAL GRADE AND REVEGETATED. ALL LAND CLEARING DEBRIS SHALL BE DISPOSED OF IN APPROVED SPOIL DISPOSAL SITES.

8. ALL WORK MUST STOP IF A VOID IN THE ROCK SUBSTRATE IS DISCOVERED WHICH IS ONE SQUARE FOOT OR LARGER IN TOTAL AREA, BLOWS AIR FROM WITHIN THE SUBSTRATE, AND/OR CONSISTENTLY RECEIVES WATER DURING ANY RAIN EVENT. AT THIS TIME, IT IS THE RESPONSIBILITY OF THE PROJECT MANAGER TO IMMEDIATELY CONTACT THE GENERAL PERMIT PROGRAM REPRESENTATIVE FOR FURTHER INVESTIGATION.

9. FIELD REVISIONS TO THE EROSION/SEDIMENTATION CONTROL PLAN MAY BE REQUIRED BY THE GENERAL PERMIT PROGRAM REPRESENTATIVE DURING THE COURSE OF CONSTRUCTION TO CORRECT CONTROL INADEQUACIES. ANY REVISIONS TO THE PERMITTED PLAN MUST BE APPROVED BY THE GENERAL PERMIT PROGRAM OFFICE OF THE PLANNING AND DEVELOPMENT REVIEW DEPARTMENT.

PERMANENT EROSION/SEDIMENTATION CONTROL: ALL DISTURBED AREAS SHALL BE RESTORED IN ACCORDANCE WITH THE CONTRACT DOCUMENTS. WHERE THE CRITERIA MANUAL AND CONTRACT DOCUMENTS DIFFER THE MOST ENVIRONMENTALLY BENEFICIAL MATERIALS/METHOD SHALL BE REQUIRED UNLESS OTHERWISE APPROVED BY THE ENVIRONMENTAL INSPECTOR.

10. DEVELOPER INFORMATION:

OWNER:

COMPANY:	CITY OF AUSTIN , AUSTIN WATER
CONTACT:	STEVE PARKS, P.E.
ADDRESS:	505 BARTON SPRINGS ROAD
	AUSTIN, TEXAS 78704
PHONE:	512—974—3576
FAX:	.

OWNER'S REPRESENTATIVE RESPONSIBLE FOR PLAN ALTERATIONS:

COMPANY:	CAS CONSULTING & SERVICES, INC.
CONTACT:	ANDREW M. ROOKE, P.E.
ADDRESS:	7908 CAMERON ROAD
	AUSTIN, TEXAS 78754
PHONE:	(512) 836—2388
FAX:	(512) 836—4515

PARTY RESPONSIBLE FOR EROSION/SEDIMENTATION CONTROL MAINTENANCE:

COMPANY: CONTRACTOR

PARTY RESPONSIBLE FOR TREE/NATURAL AREA PROTECTION MAINTENANCE:

COMPANY: CONTRACTOR

11. THE CONTRACTOR SHALL NOT DISPOSE OF SURPLUS EXCAVATED MATERIAL FROM THE SITE WITHOUT NOTIFYING THE ENVIRONMENTAL INSPECTOR, AT 974—2278, AT LEAST 48 HOURS PRIOR TO THE SPOILS REMOVAL. THIS NOTIFICATION SHALL INCLUDE THE DISPOSAL LOCATION AND A COPY OF THE PERMIT ISSUED TO RECEIVE THE MATERIAL.

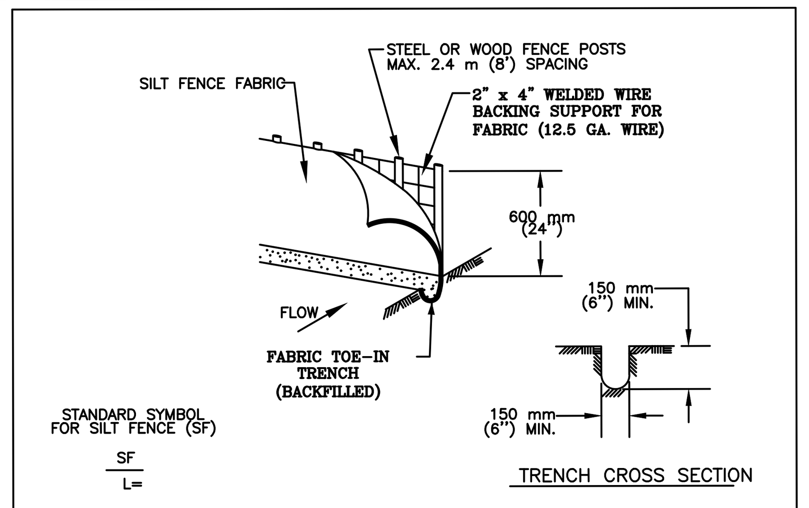

1. STEEL OR WOOD POSTS WHICH SUPPORT THE SILT FENCE SHALL BE INSTALLED ON A SLIGHT ANGLE TOWARD THE ANTICIPATED RUNOFF SOURCE. POST MUST BE EMBEDDED A MINIMUM OF 300 mm (12 INCHES). IF WOOD POSTS CANNOT ACHIEVE 300 mm (12 inches) DEPTH, USE STEEL POSTS.

2. THE TOE OF THE SILT FENCE SHALL BE TRENCHED IN WITH A SPADE OR MECHANICAL TRENCHER, SO THAT THE DOWNSLOPE FACE OF THE TRENCH IS FLAT AND PERPENDICULAR TO THE LINE OF FLOW.

3. THE TRENCH MUST BE A MINIMUM OF 150 mm (6 inches) DEEP AND 150 mm (6 inches) WIDE TO ALLOW FOR THE SILT FENCE FABRIC TO BE LAID IN THE GROUND AND BACKFILLED WITH COMPACTED MATERIAL.

4. SILT FENCE FABRIC SHOULD BE SECURELY FASTENED TO EACH STEEL OR WOOD SUPPORT POST OR TO WOVEN WIRE , WHICH IS IN TURN ATTACHED TO THE STEEL OR WOOD FENCE POST.

5. INSPECTION SHALL BE MADE WEEKLY OR AFTER EACH RAINFALL EVENT AND REPAIR OR REPLACEMENT SHALL BE MADE PROMPTY AS NEEDED.

6. SILT FENCE SHALL BE REMOVED WHEN THE SITE IS COMPLETELY STABILIZED SO AS NOT TO BLOCK OR IMPEDE STORM FLOW OR DRAINAGE.

7. ACCUMULATED SILT SHALL BE REMOVED WHEN IT REACHES A DEPTH OF 150 mm (6 inches). THE SILT SHALL BE DISPOSED OF ON AN APPROVED SITE AND IN SUCH A MANNER THAT WILL NOT CONTRIBUTE TO ADDITIONAL SILTATION.

CITY OF AUSTIN WATERSHED PROTECTION DEPARTMENT		SILT FENCE	
RECORD COPY SIGNED BY MORGAN BYARS	09/01/2011 ADOPTED	THE ARCHITECT/ENGINEER ASSUMES RESPONSIBILITY FOR APPROPRIATE USE OF THIS STANDARD.	STANDARD NO. 642S—1

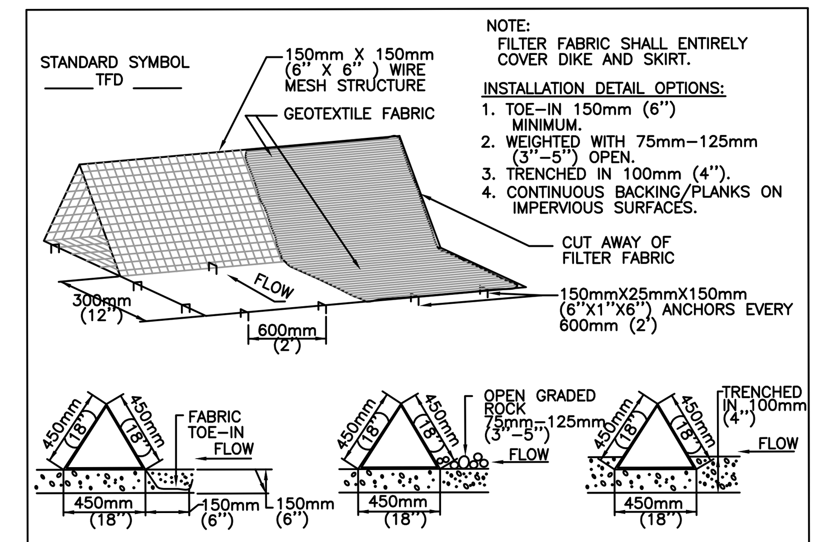

GENERAL NOTES

1. DIKES SHALL BE PLACED IN A ROW WITH ENDS TIGHTLY ABUTTING THE ADJACENT DIKE.
2. THE FABRIC COVER AND SKIRT SHALL BE A CONTINUOUS WRAPPING OF GEOTEXTILE. THE SKIRT SHALL BE A CONTINUOUS EXTENSION OF THE FABRIC ON THE UPSTREAM FACE.
3. THE SKIRT SHALL BE WEIGHTED WITH A CONTINUOUS LAYER OF 75—125mm (3—5") OPEN GRADED ROCK OR TOED—IN 150mm (6") WITH MECHANICALLY COMPACTED MATERIAL. OTHERWISE, THE ENTIRE STRUCTURE SHALL BE TRENCHED IN 100mm (4").
4. DIKES AND SKIRT SHALL BE SECURELY ANCHORED IN PLACE USING 150mm (6") WIRE STAPLES ON 600mm (2') CENTERS ON BOTH EDGES AND SKIRT, OR STAKE USING 10M (3/8 ") DIAMETER RE—BAR WITH TEE ENDS.
5. FILTER MATERIAL SHALL BE LAPPED OVER ENDS 150mm (6") TO COVER DIKE TO DIKE JOINTS. JOINTS SHALL BE FASTENED WITH GALVANIZED SHOAT RINGS.
6. THE DIKE STRUCTURE SHALL BE MW40—150mmX150mm (6 GA. 6"X6") WIRE MESH, 450mm (18") ON A SIDE.
7. INSPECTION SHALL BE MADE WEEKLY OR AFTER EACH RAINFALL EVENT AND REPAIR OR REPLACEMENT SHALL BE MADE PROMPTLY AS NEEDED BY THE CONTRACTOR.
8. ACCUMULATED SILT SHALL BE REMOVED WHEN IT REACHES A DEPTH OF 150mm (6") AND DISPOSED OF IN A MANNER WHICH WILL NOT CAUSE ADDITIONAL SILTATION.
9. AFTER THE DEVELOPMENT SITE IS COMPLETLY STABILIZED, THE DIKES AND ANY REMAINING SILT SHALL BE REMOVED. SILT SHALL BE DISPOSED OF AS INDICATED IN GENERAL NOTE 8 ABOVE.

CITY OF AUSTIN WATERSHED PROTECTION DEPARTMENT		TRIANGULAR SEDIMENT FILTER DIKE	
RECORD COPY SIGNED BY J. PATRICK MURPHY	3/27/00 ADOPTED	THE ARCHITECT/ENGINEER ASSUMES RESPONSIBILITY FOR APPROPRIATE USE OF THIS STANDARD.	STANDARD NO. 628S

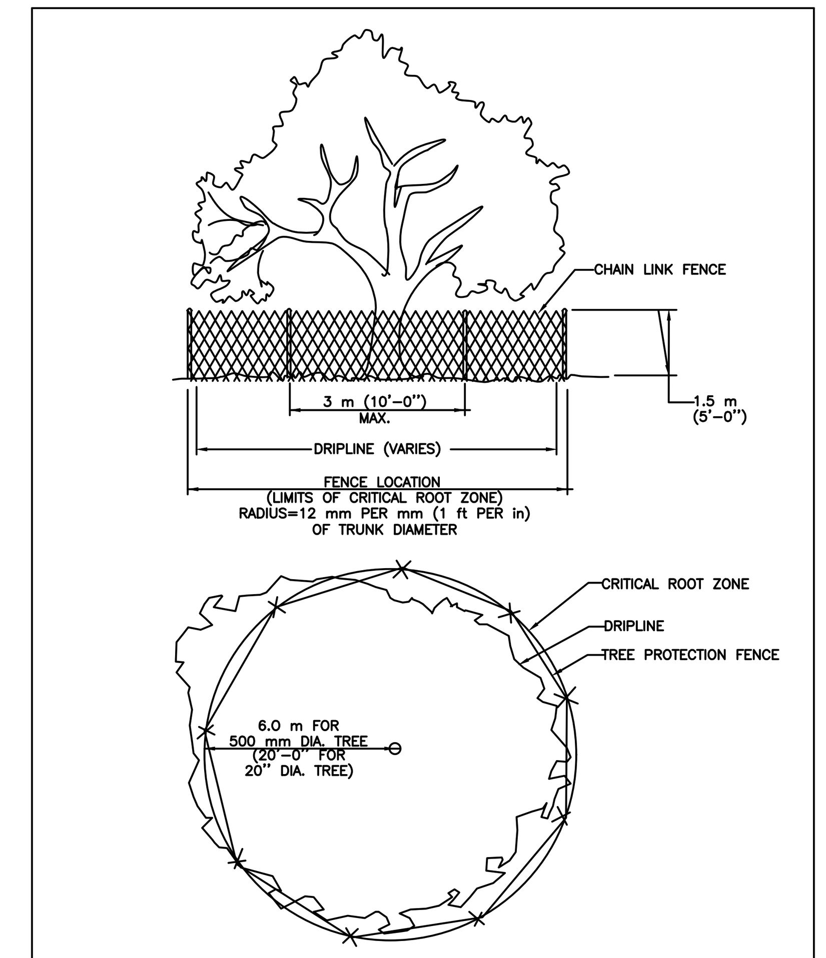

CITY OF AUSTIN WATERSHED PROTECTION DEPARTMENT		TREE PROPTECTION FENCE TYPE A — CHAIN LINK	
RECORD COPY SIGNED BY J. PATRICK MURPHY	11/15/99 ADOPTED	THE ARCHITECT/ENGINEER ASSUMES RESPONSIBILITY FOR APPROPRIATE USE OF THIS STANDARD.	STANDARD NO. 610S-2

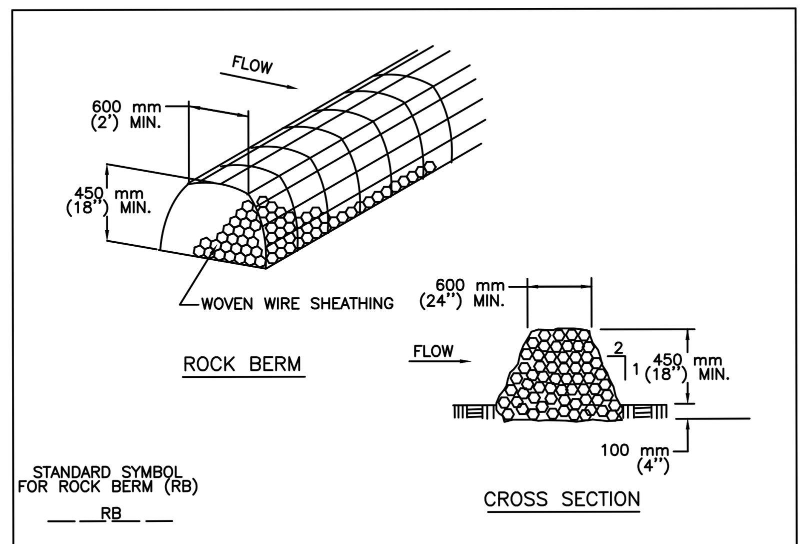

NOTES:

1. USE ONLY OPEN GRADED ROCK 75 to 125 mm (3 to 5") DIAMETER FOR ALL CONDITIONS.
2. THE ROCK BERM SHALL BE SECURED WITH A WOVEN WIRE SHEATHING HAVING MAXIMUM 25 mm (1") OPENING AND MINIMUM WIRE DIAMETER OF 12.9 mm (20 GAUGE).
3. THE ROCK BERM SHALL BE INSPECTED DAILY OR AFTER EACH RAIN, AND THE STONE AND/OR FABRIC CORE—WOVEN SHEATHING SHALL BE REPLACED WHEN THE STRUCTURE CEASES TO FUNCTION AS INTENDED, DUE TO SEDIMENT ACCUMULATION AMONG THE ROCKS, WASHOUT, CONSTRUCTION TRAFFIC DAMAGE, ETC.
4. IF SEDIMENT REACHES A DEPTH EQUAL TO ONE—THIRD THE HEIGHT OF THE BERM OR 150 mm (6"), WHICHEVER IS LESS, THE SEDIMENT SHALL BE REMOVED AND DISPOSED OF ON AN APPROVED SITE AND IN A MANNER THAT WILL NOT CREATE A SEDIMENTION PROBLEM.
5. WHEN THE SITE IS COMPLETELY STABILIZED,THE BERM AND ACCUMULATED SEDIMENT SHALL BE REMOVED AND DISPOSED OF IN AN APPROVED MANNER.

CITY OF AUSTIN WATERSHED PROTECTION DEPARTMENT		ROCK BERM	
RECORD COPY SIGNED BY MORGAN BYARS	8/24/2010 ADOPTED	THE ARCHITECT/ENGINEER ASSUMES RESPONSIBILITY FOR APPROPRIATE USE OF THIS STANDARD.	STANDARD NO. 639S—1

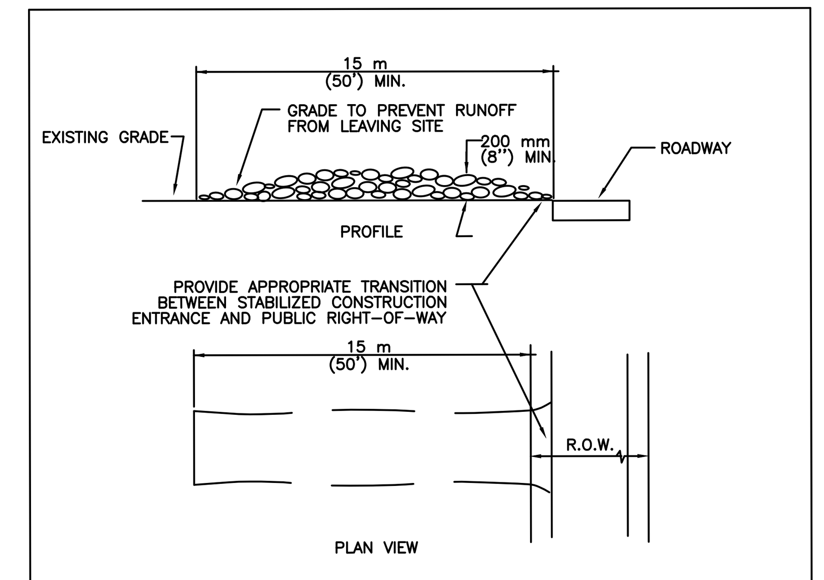

NOTES:

1. STONE SIZE: 75—125 mm (3—5") OPEN GRADED ROCK.
2. LENGTH: AS EFFECTIVE BUT NOT LESS THAN 15 m (50').
3. THICKNESS: NOT LESS THAN 200 mm (8").
4. WIDTH: NOT LESS THAN FULL WIDTH OF ALL POINTS OF INGRESS/EGRESS.
5. WASHING: WHEN NECESSARY, VEHICLE WHEELS SHALL BE CLEANED TO REMOVE SEDIMENT PRIOR TO ENTRANCE ONTO PUBLIC ROADWAY. WHEN WASHING IS REQUIRED, IT SHALL BE DONE ON AN AREA STABILIZED WITH CRUSHED STONE AND DRAINS INTO AN APPROVED TRAP OR SEDIMENT BASIN. ALL SEDIMENT SHALL BE PREVENTED FROM ENTERING ANY STORM DRAIN, DITCH OR WATERCOURSE USING APPROVED METHODS.
6. MAINTENANCE: THE ENTRANCE SHALL BE MAINTAINED IN A CONDITION THAT WILL PREVENT TRACKING OR FLOWING OF SEDIMENT ONTO PUBLIC ROADWAY. THIS MAY REQUIRE PERIODIC TOP DRESSING WITH ADDITIONAL STONE AS CONDITIONS DEMAND, AS WELL AS REPAIR AND CLEAN OUT OF ANY MEASURE DEVICES USED TO TRAP SEDIMENT. ALL SEDIMENTS THAT IS SPILLED, DROPPED, WASHED OR TRACKED ONTO PUBLIC ROADWAY MUST BE REMOVED IMMEDIATELY.
7. DRAINAGE: ENTRANCE MUST BE PROPERLY GRADED OR INCORPORATE A DRAINAGE SWALE TO PREVENT RUNOFF FROM LEAVING THE CONSTRUCTION SITE.

CITY OF AUSTIN WATERSHED PROTECTION DEPARTMENT		STABILIZED CONSTRUCTION ENTRANCE	
RECORD COPY SIGNED BY J. PATRICK MURPHY	5/23/00 ADOPTED	THE ARCHITECT/ENGINEER ASSUMES RESPONSIBILITY FOR APPROPRIATE USE OF THIS STANDARD.	STANDARD NO. 641S-1

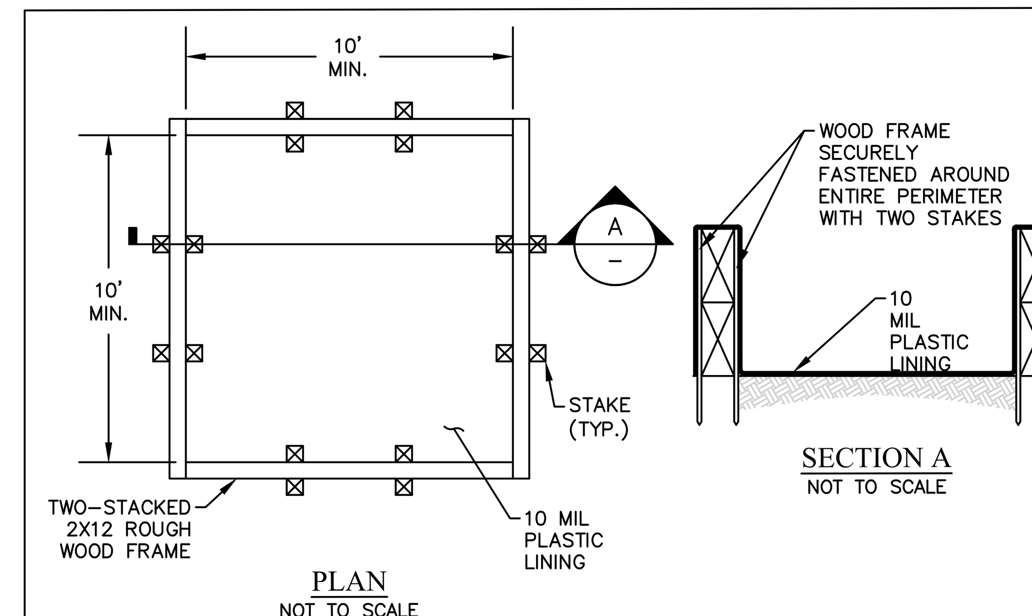

NOTES:

1. ACTUAL LAYOUT DETERMINED IN FIELD.
2. INSTALL CONCRETE WASHOUT SIGN WITHIN 30 FT. OF THE TEMPORARY CONCRETE WASHOUT FACILITY.
3. IN LIEU OF DESIGN SHOWN ABOVE, CONTRACTOR MAY SUBSTITUTE PREFABRICATED DESIGN OR OTHER FABRICATED ON—SITE DESIGN PROVIDED HE/SHE SUBMITS SKETCH TO ENVIRONMENTAL INSPECTOR FOR APPROVAL.
4. CONTRACTOR SHALL SUBMIT MAINTENANCE PLAN TO ENVIRONMENTAL INSPECTOR FOR APPROVAL. PLAN SHALL INCLUDE ANTICIPATED NUMBER OF CONCRETE TRUCKS PER DAY, CLEANING SCHEDULE, DISPOSAL PLAN FOR SOLIDS AND LIQUIDS, AND FREQUENCY OF INSPECTION.
5. CONTRACTOR SHALL IMMEDIATELY REPAIR LINER IF LEAKAGE IS OBSERVED.

CONCRETE WASHOUT AREA

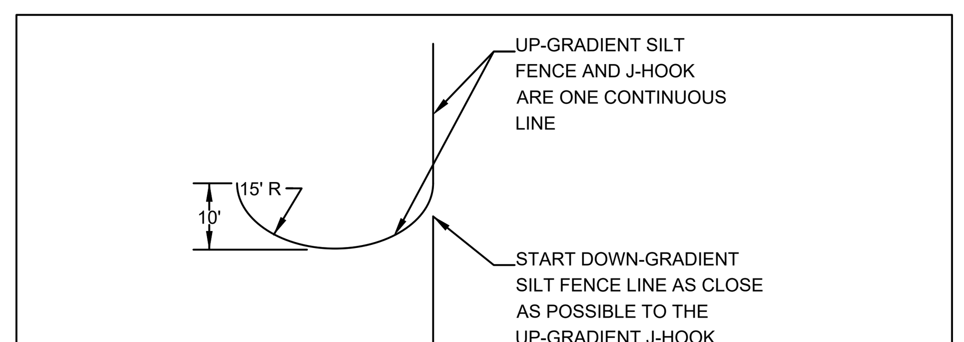

J-HOOK DETAIL

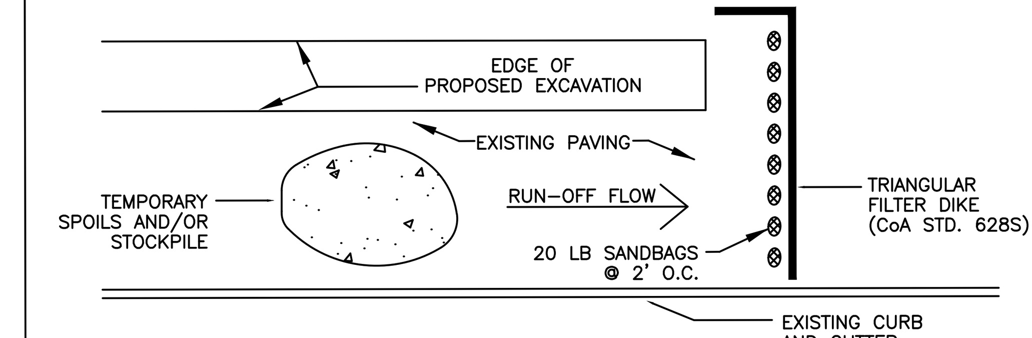

NOTES:

1. THE TEMPORARY SPOILS/STOCKPILE STORAGE AREA AND STAGING AREA MAY BE LOCATED DIRECTLY ADJACENT TO THE EXCAVATION AND ON THE PAVEMENT.
2. ANY SPOIL NOT INTENDED TO BE REUSED WILL BE HAULED TO AN APPROVED OR PERMITTED DISPOSAL SITE DAILY.
3. INSTALL TRIANGULAR SEDIMENT FILTER DIKE (DETAIL 682S) ACROSS FULL WIDTH OF TRAFFIC CLOSURE AND DOWNSTREAM OF CONSTRUCTION AREA, PERPENDICULAR TO CURB AND PLACED TO EFFECTIVELY CATCH AND CONTAIN SEDIMENT LADEN RUNOFF FROM THE EXCAVATED AREA. FILTER DIKE TO FOLLOW ACTIVE CONSTRUCTION. REMOVING AND RE—SETTING FILTER DIKE IS CONSIDERED SUBSIDIARY TO BARRICADES AND TRAFFIC HANDLING.

ADDITIONAL EROSION/SEDIMENTATION CONTROL FOR WORK IN PAVED AREAS

GENERAL PERMIT OFFICE
EROSION/SEDIMENTATION CONTROL
CITY OF AUSTIN STANDARD NOTES AND DETAILS

CITY OF AUSTIN FOUNDED 1839

REVISIONS — NO. | BY | DATE | REMARKS

SHEET INFORMATION
DATE FEB 2017
SHEET S-C-03 OF X
CAD REF. NO.

BAR LENGTH ON ORIGINAL DRAWING EQUALS ONE INCH, ADJUST SCALE ACCORDINGLY.

CAS CONSULTING & SERVICES, INC.
CIVIL ENGINEERING | PROGRAM MANAGEMENT | CONSTRUCTION MANAGEMENT
7908 Cameron Road | Austin, TX 78754 | REG. NO. F-003572
Main: 512.836.2388 | Fax: 512.836.4515

STATE OF TEXAS
MICHAEL C. MERIWETHER
58563
LICENSED
PROFESSIONAL ENGINEER
9/27/2019

NO.	DATE:	DESCRIPTION

HARUTUNIAN ENGINEERING INCORPORATED
TEXAS FIRM REGISTRATION NUMBER F-2408
ENGINEERING AND ENVIRONMENTAL CONSULTANTS
8100 CROSS PARK DRIVE
AUSTIN, TEXAS 78754

REUSE OF DOCUMENTS
This document, and the designs incorporated herein, is an instrument of professional service that has been developed, designed and prepared by Harutunian Engineering, Inc., and is not to be used, in whole or in part, for any other project without giving written notice to Harutunian Engineering, Inc.

DESIGNED BY: CAS
CHECKED BY: CAS
APPROVED BY: CAS
SUBMITTAL DATE: OCTOBER 2019
SCALE:

SOUTH AUSTIN REGIONAL WASTEWATER TREATMENT PLANT
ELECTRICAL SUBSTATION NO. 1 REPLACEMENT PROJECT
CIP I.D.# 3333.032

EROSION AND SEDIMENTATION DETAILS

PROJECT NO: 2014—300 | SHT. 786 OF 866 | DWG NO. TD—C—005

GENERAL PERMIT PROGRAM (GPP)
STANDARD ENVIRONMENTAL NOTES:

ADDITIONAL AREAS:

ANY ADDITIONAL AREAS REQUIRED FOR CONSTRUCTION OF THIS PROJECT SHALL BE THE SOLE RESPONSIBILITY OF THE CONTRACTOR. CONTRACTOR MUST SECURE CITY OF AUSTIN APPROVAL OF PROPOSED ADDITIONAL AREAS PRIOR TO USE. APPROVAL OF "CORRECTION REQUEST" MUST BE SECURED FROM THE GENERAL PERMIT PROGRAM OFFICE OF THE PLANNING AND DEVELOPMENT REVIEW DEPARTMENT.

ALL ASSOCIATED PERMITS AND FEES SHALL BE THE SOLE RESPONSIBILITY OF THE CONTRACTOR.

IN ORDER TO SECURE APPROVAL FOR USE OF ADDITIONAL AREAS, CONTRACTOR MUST PROVIDE COMPLETE "CORRECTION REQUEST" SUBMITTAL TO GENERAL PERMIT PROGRAM OFFICE AND ALLOW A ONE WEEK COMMENT PERIOD FOR EACH REVIEW. CONTRACTOR SHOULD REQUEST INFORMATION ON THE ELEMENTS REQUIRED TO BE INCLUDED IN THE SUBMITTAL FROM THE OWNER'S REPRESENTATIVE OR THE GENERAL PERMIT PROGRAM OFFICE.

CONTRACTOR MUST INSTALL AND MAINTAIN EROSION/SEDIMENTATION CONTROLS AND TREE PROTECTION FOR ALL SUCH AREAS IN ACCORDANCE WITH THE CITY OF AUSTIN ENVIRONMENTAL CRITERIA MANUAL AND AS INCLUDED IN THE APPROVED SUBMITTAL OR DIRECTED IN THE FIELD BY THE GENERAL PERMIT PROGRAM REPRESENTATIVE.

A SIGNED COPY OF THE PLANS PERMITTED THROUGH THE GENERAL PERMIT PROGRAM MUST BE KEPT ON SITE AND ACCESSIBLE AT ALL TIMES DURING PROJECT CONSTRUCTION.

DEWATERING:

CONTRACTOR IS RESPONSIBLE FOR DEWATERING OF WORK AREA. CONTRACTOR MUST SECURE CITY OF AUSTIN APPROVAL OF PROPOSED DEWATERING PROCEDURES PRIOR TO INSTALLATION OR USE. APPROVAL MUST BE SECURED FROM THE GENERAL PERMIT PROGRAM (GPP) OFFICE OF THE PLANNING AND DEVELOPMENT REVIEW DEPARTMENT. CONTRACTOR MUST PROVIDE COMPLETE SUBMITTAL TO GPP OFFICE AND ALLOW AN ONE WEEK (MIN.) COMMENT PERIOD FOR EACH REVIEW. CONTACT THE GPP OFFICE FOR SUBMITTAL REQUIREMENTS.

FUEL STORAGE:

FUEL STORAGE IS PROHIBITED ON THIS PROJECT. ADDITIONALLY, THE CONTRACTOR IS REQUIRED TO NOTIFY THE GENERAL PERMIT PROGRAM OFFICE IMMEDIATELY FOLLOWING ANY SPILL OF FUEL OR OTHER TOXIC MATERIAL. CONTRACTOR IS REQUIRED TO FOLLOW-UP WITH WRITTEN DOCUMENTATION, INCLUDING A COMPLETE DESCRIPTION OF THE INCIDENT, MATERIAL SPILLED, AND ACTIONS TAKEN TO CONTAIN AND CLEAN-UP MATERIAL.

FUGITIVE DUST CONTROL:

ALL PROJECTS APPROVED THROUGH THE GENERAL PERMIT PROGRAM (GPP) MUST COMPLY WITH THE CODE OF THE CITY OF AUSTIN AND THE ENVIRONMENTAL CRITERIA MANUAL REQUIREMENTS TO CONTROL AIRBORNE DUST. COMPLIANCE IS REQUIRED FOR ENTIRE PROJECT SITE AS WELL AS ASSOCIATED OPERATIONS. CONTACT THE GPP OFFICE FOR RECOMMENDED CONTROL METHODS.

SPOILS STORAGE:

NO SPOILS STORAGE IS ALLOWED WITHIN A CRITICAL WATER QUALITY ZONE, A 100-YEAR FLOODPLAIN, OR ON A SLOPE WITH A GRADIENT OF MORE THAN 15 PERCENT.

E/S CONTROLS FOR BORE / RECEIVING PIT LOCATIONS:

TEMPORARY E/S CONTROLS MUST SURROUND THE ENTIRETY OF BORING OPERATIONS, INCLUDING PIT, EQUIPMENT, ETC. FOR LOCATIONS WITHIN IMPERVIOUS AREAS, TEMPORARY CONTROL WILL BE TRIANGULAR FILTER DIKE (COA STANDARD DETAIL #628S). DIKE FLAP WILL BE CONTINUOUSLY WEIGHTED DOWN THROUGH THE USE OF 1" BY 4" WOOD STRIPS NAILED TO THE PAVEMENT, EXCEPT FOR THE ACCESS POINT. PLACEMENT OF TEMPORARY E/S CONTROLS ACROSS ACCESS POINT WILL BE REQUIRED WHENEVER THE SITE IS NOT ACTIVELY USED. FOR LOCATIONS WITHIN PERVIOUS AREAS, TEMPORARY CONTROL WILL BE SILT FENCE (COA STANDARD DETAIL #642S-1) OR MULCH SOCKS (MULCH SOCKS DETAIL ON SHEET C-004) AS INDICATED ON APPROVED PLANS.

SOIL RETENTION BLANKET:

UNLESS OTHERWISE INDICATED IN THE PROJECT DOCUMENTS, INSTALLATION OF SOIL RETENTION BLANKET WILL BE REQUIRED FOR ALL IMPACTED SLOPES GREATER THAN 3:1 AND ALL IMPACTED AREAS WITHIN DRAINAGE CONVEYANCES. (CITY OF AUSTIN STANDARD SPECIFICATION ITEM 605S) SOIL RETENTION BLANKET SUBMITTAL MUST BE APPROVED BY PROJECT ENGINEER AND GENERAL PERMIT PROGRAM (GPP) REPRESENTATIVE PRIOR TO USE AND MUST INCLUDE PRODUCT AND INSTALLATION DETAILS PROVIDED BY MANUFACTURER. FINISH GRADING MUST BE INSPECTED AND APPROVED BY GPP INSPECTOR PRIOR TO BLANKET INSTALLATION. INSTALLATION MUST BE IN ACCORDANCE WITH MANUFACTURER'S RECOMMENDATIONS AND MUST BE INSPECTED AND APPROVED BY GPP REPRESENTATIVE PRIOR TO ACCEPTANCE.

SOD INSTALLATION:

REVEGETATION WITHIN MANAGED TURF AREAS MUST BE ACCOMPLISHED THROUGH THE INSTALLATION OF SOLID BLOCK GRASS SOD. SOD TYPE MUST MATCH ADJACENT GRASS TYPE. QUESTIONS REGARDING SOD TYPE WILL BE RESOLVED BY THE GENERAL PROGRAM PERMIT REPRESENTATIVE. REFER TO CITY OF AUSTIN STANDARD SPECIFICATION ITEM NO. 602S: SODDING FOR EROSION CONTROL, UNLESS OTHERWISE NOTED ON THE APPROVED PLANS.

TxDOT RIGHTS-OF-WAY:

TOPSOIL (TxDOT ITEM NO. 160), SOIL RETENTION BLANKET (TxDOT ITEM NO. 169), AND REVEGETATION (TxDOT ITEM NO. 164) INSTALLED WITHIN TEXAS DEPARTMENT OF TRANSPORTATION (TxDOT) RIGHT-OF-WAY SHALL COMPLY WITH "REQUIREMENTS FOR INSTALLATION OF UTILITIES WITHIN THE STATE RIGHT-OF-WAY, AUSTIN DISTRICT".

PROJECT SEQUENCE:
(REFER TO FULL PLAN SET FOR PROJECT-SPECIFIC ADDITIONS, IF APPLICABLE.)

PRIOR TO CONSTRUCTION:

1. SECURE APPLICABLE COA PERMITS, INCLUDING APPROVAL UNDER GENERAL PERMIT AND UTILITY STREET CUT PERMIT.
2. NOTIFY GENERAL PERMIT PROGRAM REPRESENTATIVE PRIOR TO PLACEMENT OF E/S CONTROLS AND TREE PROTECTION FENCING. ALL PROPOSED PHASING OF CONTROLS MUST BE SUBMITTED TO AND APPROVED BY THE GENERAL PERMIT PROGRAM REPRESENTATIVE PRIOR TO THE FIELD PRE-CONSTRUCTION CONFERENCE.
3. NOTIFY COA TEMPORARY TRAFFIC CONTROL REPRESENTATIVE PRIOR TO PLACEMENT OF TEMPORARY TRAFFIC CONTROLS. ALL PROPOSED PHASING OF CONTROLS MUST BE INDICATED ON APPROVED TEMPORARY TRAFFIC CONTROL PLAN AND SEALED BY PROFESSIONAL ENGINEER.
4. PLACE TEMPORARY E/S CONTROLS AND TREE PROTECTION FENCING PRIOR TO BEGINNING ANY EXCAVATION. INSTALL C.I.P. SIGN, IF APPLICABLE.
5. HOLD ENVIRONMENTAL PRE-CONSTRUCTION CONFERENCE ON SITE WITH THE CONTRACTOR, OWNER'S REPRESENTATIVE, AND GENERAL PERMIT PROGRAM REPRESENTATIVE AFTER INSTALLATION OF E/S CONTROLS AND TREE PROTECTION FENCING AND PRIOR TO ANY TRENCHING OPERATIONS.
6. PLACE TEMPORARY TRAFFIC CONTROL DEVICES.

PROJECT CONSTRUCTION:

1. BEGIN CONSTRUCTION. NOTIFY GENERAL PERMIT PROGRAM REPRESENTATIVE A MINIMUM OF 48 HOURS IN ADVANCE OF TRANSITION BETWEEN PHASES.
2. CONTACT GENERAL PERMIT OFFICE TO SCHEDULE FIELD INSPECTION PRIOR TO BEGINNING INSTALLATION OF PERMANENT E/S CONTROLS.
3. COMPLETE RESTORATION OF ALL AREAS DISTURBED BY CONSTRUCTION ACTIVITIES FOR THIS PROJECT. (PERMANENT E/S CONTROLS)
4. REMOVE TEMPORARY TRAFFIC CONTROL DEVICES RELATED TO WORK AREAS OUTSIDE OF THE STREET.
5. HOLD ENVIRONMENTAL POST-CONSTRUCTION CONFERENCE ON SITE WITH THE CONTRACTOR, OWNER'S REPRESENTATIVE, AND GENERAL PERMIT PROGRAM REPRESENTATIVE. ALL PERMANENT E/S CONTROLS MUST BE ACCEPTED BY THE GENERAL PERMIT PROGRAM REPRESENTATIVE. PERMANENT CONTROLS SHALL CONSIST OF REVEGETATION PER DETAILS 602, 604S, AND 609S AS INDICATED ON APPROVED PLANS.
6. FOLLOWING FINAL ACCEPTANCE OF PERMANENT E/S CONTROLS BY THE GENERAL PERMIT PROGRAM REPRESENTATIVE, REMOVE TEMPORARY E/S CONTROLS. CLEAN EXISTING STORM DRAINAGE SYSTEMS AS NECESSARY DUE TO CONSTRUCTION OPERATIONS.
7. DRESS-UP AND RESTORE ANY AREAS DISTURBED BY REMOVAL OF TEMPORARY E/S CONTROLS DESCRIBED ABOVE.

REQUIRED SUBMITTALS:

SUBMITTALS REQUIRED TO BE APPROVED BY GENERAL PERMIT PROGRAM REPRESENTATIVE INCLUDE: SUBMITTALS TRIGGERED BY CITY OF AUSTIN SERIES 600 SPECIFICATIONS AND RELATED SPECIAL PROVISIONS/SPECIFICATIONS, CONSTRUCTION SCHEDULE, TREE PROTECTION, P-6 AND OTHER ROOT ZONE PROTECTION/MITIGATION MEASURES, DEWATERING PLAN, WATERING SCHEDULE FOR REVEGETATION AREAS, AND ANY VEGETATIVE REPLACEMENT PROPOSALS, IF NOT ALREADY PART OF THE PERMITTED PLAN SET.

CITY OF AUSTIN - STANDARD NOTES
TREE AND NATURAL AREA PROTECTION
(MODIFIED FOR USE ON GENERAL PERMIT PROJECTS)

1. ALL TREES AND NATURAL AREAS SHOWN ON PLAN TO BE PRESERVED SHALL BE PROTECTED DURING CONSTRUCTION WITH TEMPORARY MEASURES.
2. PROTECTIVE MEASURES SHALL BE INSTALLED ACCORDING TO CITY OF AUSTIN STANDARDS FOR TREE PROTECTION.
3. PROTECTIVE MEASURES SHALL BE INSTALLED PRIOR TO THE START OF ANY SITE PREPARATION WORK (CLEARING, GRUBBING OR GRADING), AND SHALL BE MAINTAINED THROUGHOUT ALL PHASES OF THE PROJECT.
4. EROSION AND SEDIMENTATION CONTROL MEASURES SHALL BE INSTALLED OR MAINTAINED IN A MANNER WHICH DOES NOT RESULT IN SOIL BUILD-UP, COMPACTION OR CUTTING OF CRITICAL ROOT ZONE WITHIN TREE DRIP LINES.
5. TREE PROTECTION SHALL COMPLETELY SURROUND THE TREES OR GROUP OF TREES AND WILL BE LOCATED AT THE OUTERMOST LIMIT OF BRANCHES (DRIP LINE). FOR NATURAL AREAS, PROTECTIVE MEASURES SHALL FOLLOW THE LIMIT OF CONSTRUCTION LINE, IN ORDER TO PREVENT THE FOLLOWING:
   A. SOIL COMPACTION IN THE ROOT ZONE AREA RESULTING FROM VEHICULAR TRAFFIC OR STORAGE OF EQUIPMENT OR MATERIALS;
   B. ROOT ZONE DISTURBANCES DUE TO GRADE CHANGES (GREATER THAN 6 INCHES CUT OR FILL) OR TRENCHING NOT REVIEWED AND AUTHORIZED BY THE GENERAL PERMIT PROGRAM OFFICE OF THE PLANNING AND DEVELOPMENT REVIEW DEPARTMENT;
   C. WOUNDS TO EXPOSED ROOTS, TRUNK OR LIMBS BY MECHANICAL EQUIPMENT;
   D. OTHER ACTIVITIES DETRIMENTAL TO TREES SUCH AS CHEMICAL STORAGE, CEMENT TRUCK CLEANING, AND FIRES.
6. EXCEPTIONS TO INSTALLING PROTECTIVE FENCES AT CRITICAL ROOT ZONES MAY BE PERMITTED IN THE FOLLOWING CASES:
   A. WHERE THERE IS TO BE AN APPROVED GRADE CHANGE, IMPERMEABLE PAVING SURFACE, TREE WELL, OR OTHER SUCH SITE DEVELOPMENT, ERECT THE FENCE APPROXIMATELY 2 FEET BEYOND THE AREA DISTURBED;
   B. WHERE PERMEABLE PAVING IS TO BE INSTALLED, ERECT THE FENCE AT THE OUTER LIMITS OF THE PERMEABLE PAVING AREA
   C. WHERE TREES ARE CLOSE TO PROPOSED BUILDINGS, ERECT THE FENCE NO CLOSER THAN 6 FEET TO THE BUILDING
   D. WHERE THERE ARE SEVERE SPACE CONSTRAINTS DUE TO TRACT SIZE, OR OTHER SPECIAL REQUIREMENTS, CONTACT THE GENERAL PERMIT PROGRAM OFFICE AT 974-6330 TO DISCUSS ALTERNATIVES.

SPECIAL NOTE: FOR THE PROTECTION OF NATURAL AREAS, NO EXCEPTIONS TO INSTALLING FENCES AT THE LIMIT OF CONSTRUCTION LINE WILL BE PERMITTED.

WHERE ANY OF THE ABOVE EXCEPTIONS RESULT IN A FENCE 5 FEET OR CLOSER TO A TREE TRUNK, PROTECT THE TRUNK WITH STRAPPED-ON PLANKING TO A HEIGHT OF 8 FEET (OR TO THE LIMITS OF LOWER BRANCHING) IN ADDITION TO THE REDUCED FENCING.

7. WHERE ANY OF THE ABOVE EXCEPTIONS RESULT IN AREAS OF UNPROTECTED ROOT ZONES, THOSE AREAS SHOULD BE COVERED WITH 12 INCHES OF ORGANIC MULCH TO MINIMIZE SOIL COMPACTION DURING CONSTRUCTION. FILTER FABRIC UNDERLAYMENT MAY BE REQUIRED AT DIRECTION OF GENERAL PERMIT PROGRAM REPRESENTATIVE BASED ON SITE CONDITIONS AND CONSTRUCTION ACTIVITIES. MAXIMUM FOUR (4) INCHES DEPTH MAY BE LEFT IN PLACE AFTER CONSTRUCTION WITH APPROVAL FROM THE GENERAL PERMIT PROGRAM REPRESENTATIVE.
8. ALL GRADING WITHIN PROTECTED ROOT ZONE AREAS SHALL BE DONE BY HAND OR WITH SMALL EQUIPMENT TO MINIMIZE ROOT DAMAGE. PRIOR TO GRADING, RELOCATE PROTECTIVE FENCES TO 2 FEET BEHIND THE GRADE CHANGE AREA.
9. ANY ROOTS EXPOSED BY CONSTRUCTION ACTIVITY SHALL BE PRUNED FLUSH WITH THE SOIL. BACKFILL ROOT AREAS WITH GOOD QUALITY TOP SOIL AS SOON AS POSSIBLE. IF EXPOSED ROOT AREAS ARE NOT BACKFILLED WITHIN 2 DAYS, COVER THEM WITH ORGANIC MATERIAL IN A MANNER WHICH REDUCES SOIL TEMPERATURE AND MINIMIZES WATER LOSS DUE TO EVAPORATION.
10. PRIOR TO EXCAVATION OR GRADE CUTTING WITHIN TREE DRIPLINES, MAKE A CLEAN CUT BETWEEN THE DISTURBED AND UNDISTURBED ROOT ZONES WITH A ROCK SAW OR SIMILAR EQUIPMENT TO MINIMIZE DAMAGE TO REMAINING ROOTS.
11. TREES MOST HEAVILY IMPACTED BY CONSTRUCTION ACTIVITIES SHOULD BE WATERED DEEPLY ONCE A WEEK DURING PERIODS OF HOT, DRY WEATHER. TREE CROWNS SHOULD BE SPRAYED WITH WATER PERIODICALLY TO REDUCE DUST ACCUMULATION ON THE LEAVES.
12. ANY TRENCHING REQUIRED FOR THE INSTALLATION OF LANDSCAPE IRRIGATION SHALL BE PLACED AS FAR FROM EXISTING TREE TRUNKS AS POSSIBLE.
13. NO LANDSCAPE TOPSOIL DRESSING GREATER THAN 4 INCHES SHALL BE PERMITTED WITHIN THE DRIPLINE OF TREES. NO SOIL IS PERMITTED ON THE ROOT FLARE OF ANY TREE.
14. PRUNING TO PROVIDE CLEARANCE FOR STRUCTURES, VEHICULAR TRAFFIC AND EQUIPMENT SHALL TAKE PLACE BEFORE CONSTRUCTION BEGINS. SEE NOTE THREE (3) OF SUPPLEMENTAL TREE PROTECTION NOTES FOR ADDITIONAL REQUIREMENTS.
15. ALL FINISHED PRUNING MUST BE DONE ACCORDING TO RECOGNIZED, APPROVED STANDARDS OF THE INDUSTRY (REFERENCE THE NATIONAL ARBORIST ASSOCIATION PRUNING STANDARDS FOR SHADE TREES AVAILABLE ON REQUEST FROM THE GENERAL PERMIT PROGRAM OFFICE).
16. DEVIATIONS FROM THE ABOVE NOTES MAY BE CONSIDERED ORDINANCE VIOLATIONS IF THERE IS SUBSTANTIAL NONCOMPLIANCE OR IF A TREE SUSTAINS DAMAGE AS A RESULT.
17. TREES APPROVED FOR REMOVAL SHALL BE REMOVED IN A MANNER WHICH DOES NOT IMPACT TREES TO BE PRESERVED.

SUPPLEMENTAL TREE PROTECTION NOTES

1. ALL TREE PROTECTION MUST COMPLY WITH CITY OF AUSTIN REQUIREMENTS AS OUTLINED IN THE ENVIRONMENTAL CRITERIA MANUAL AND AS INDICATED BY STANDARD COA NOTES AND DETAILS INCLUDED WITHIN THIS DOCUMENT SET. CONTRACTOR SHALL INSTALL PROTECTION PRIOR TO PRE-CONSTRUCTION CONFERENCE, MAKE ADJUSTMENTS TO PROTECTION AS DIRECTED BY THE GPP REPRESENTATIVE, AND MAINTAIN PROTECTION UNTIL PROJECT IS COMPLETE.
2. TYPE AND LOCATION OF ALL TREE PROTECTION MUST BE APPROVED IN THE FIELD BY THE GENERAL PERMIT PROGRAM (GPP) INSPECTOR PRIOR TO CONSTRUCTION.
3. WALK-THROUGH: CONTRACTOR SHALL CONDUCT WALK-THROUGH MEETING WITH GENERAL PERMIT PROGRAM REPRESENTATIVE PRIOR TO PERFORMING ANY PRUNING ACTIVITIES ON TREES IN PROJECT AREA. PURPOSE OF WALK-THROUGH WILL BE TWOFOLD. ONE PURPOSE WILL BE TO DETERMINE THE MINIMUM AMOUNT OF PRUNING NECESSARY TO ALLOW CONSTRUCTION WORK TO BE COMPLETED. SECOND PURPOSE WILL BE TO DETERMINE AREAS OF PROJECT IN WHICH EXHAUST DIVERTERS WILL BE REQUIRED ON CONSTRUCTION EQUIPMENT TO PREVENT SCORCHING OF EXISTING TREES.
4. ALL PRUNING MUST BE PERFORMED IN ACCORDANCE WITH ANSI A300 (PART 1) - 2001 AMERICAN NATIONAL STANDARD FOR TREE CARE OPERATIONS (PRUNING), OR LATEST APPROVED VERSION. THIS DOCUMENT MAY BE OBTAINED ONLINE FOR A FEE AT WWW.ANSI.ORG.
5. PRUNING SHALL BE DONE WITH CLEAN, SHARP TOOLS. TO PREVENT BARK TEARS, THE WEIGHT OF THE BRANCH SHALL BE REMOVED BEFORE MAKING FINAL PRUNING CUT.
6. ALL PRUNING SHALL PRESERVE THE NATURAL CHARACTER OF THE TREE.
7. ONLY COLLAR CUTS ARE ACCEPTABLE. NO FLUSH CUTS OR STUB CUTS WILL BE ALLOWED.
8. ALL BRANCHES THAT ARE BROKEN OR DAMAGED DURING CONSTRUCTION SHALL BE REMOVED.
9. PRUNING CUTS OR DAMAGED AREAS ON AN OAK TREE SHALL BE PAINTED WITHIN FIVE MINUTES WITH A STANDARD TREE WOUND DRESSING. TREE WOUND DRESSING SHALL BE EITHER TREEKOTE AEROSOL OR TANGLEFOOT PRUNING SEALER (OR APPROVED EQUAL). THIS ALSO APPLIES TO WOUNDS CREATED BY CONSTRUCTION VEHICLES OR EQUIPMENT. ALL PRUNING MUST BE IN ACCORDANCE WITH COA OAK WILT PREVENTION POLICY.
10. ANY TREE ROOTS THAT ARE EXPOSED, CUT, OR TORN DURING CONSTRUCTION ACTIVITY SHALL BE PRUNED FLUSH WITH THE SURROUNDING SOIL. (REFER ALSO TO NUMBER 9 OF THE TREE AND NATURAL AREA PROTECTION NOTES INCLUDED IN THIS PLAN SET.)
11. ALL TRENCHING WITHIN THE CRITICAL ROOT ZONE OF A TREE TO BE PRESERVED WILL BE SAW CUT.

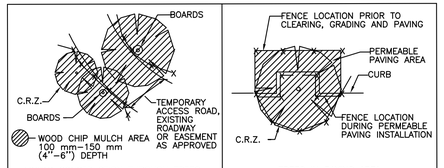

CITY OF AUSTIN WATERSHED PROTECTION DEPARTMENT		TREE PROTECTION FENCE LOCATIONS	
RECORD COPY SIGNED BY J. PATRICK MURPHY	11/15/99 ADOPTED	THE ARCHITECT/ENGINEER ASSUMES RESPONSIBILITY FOR APPROPRIATE USE OF THIS STANDARD.	STANDARD NO. 610S-1

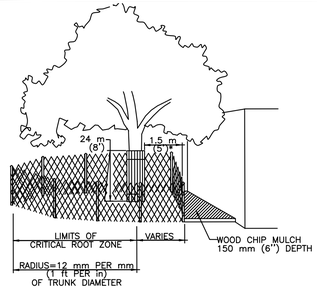

*AS NEEDED TO PROVIDE MINIMUM NECESSARY WORK SPACE. IF LESS THAN 1.5 m (5'), THEN ADD BOARDS STRAPPED TO TRUNK.

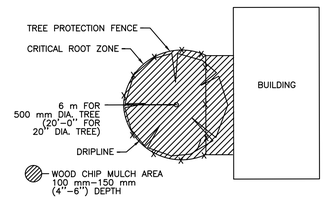

CITY OF AUSTIN WATERSHED PROTECTION DEPARTMENT		TREE PROTECTION FENCE MODIFIED TYPE A - CHAIN LINK	
RECORD COPY SIGNED BY J. PATRICK MURPHY	11/15/99 ADOPTED	THE ARCHITECT/ENGINEER ASSUMES RESPONSIBILITY FOR APPROPRIATE USE OF THIS STANDARD.	STANDARD NO. 610S-4

URBAN FOREST ACCOUNTING:

TOTAL APPENDIX F TREE INCHES SURVEYED	182
TOTAL APPENDIX F TREE INCHES REMOVED	0
TOTAL NON-APPENDIX F AND INVASIVE REMOVED	0
TOTAL MITIGATION INCHES PLANTED ON SITE	0
TOTAL DEAD INCHES REMOVED	0
TOTAL NON-MITIGATION INCHES PLANTED ON SITE	0

GENERAL PERMIT OFFICE
TREE PROTECTION AND ENVIRONMENTAL NOTES
CITY OF AUSTIN STANDARD NOTES AND DETAILS

NO.	BY	DATE	REMARKS
			REVISIONS

SHEET INFORMATION
DATE JUNE 2016
SHEET 8-C-04 OF X
CAD REF NO. TP-ENVPROJ.DWG

BAR LENGTH ON ORIGINAL DRAWING EQUALS ONE INCH. ADJUST SCALE ACCORDINGLY.

CAS CONSULTING & SERVICES, INC.
CIVIL ENGINEERING | PROGRAM MANAGEMENT | CONSTRUCTION MANAGEMENT
7908 Cameron Road | Austin, TX 78754 |REG. NO. F-003572
Main: 512.836.2388 | Fax: 512.836.4515

STATE OF TEXAS · MICHAEL C. MERIWETHER · 58563 · LICENSED PROFESSIONAL ENGINEER
9/27/2019

NO.	DATE:	DESCRIPTION

HARUTUNIAN ENGINEERING INCORPORATED
TEXAS FIRM REGISTRATION NUMBER F-2408
ENGINEERING AND ENVIRONMENTAL CONSULTANTS
8100 CROSS PARK DRIVE
AUSTIN, TEXAS 78754

REUSE OF DOCUMENTS
This document, and the designs incorporated herein, is an instrument of professional service that has been developed, designed and prepared by Harutunian Engineering, Inc., and is not to be used, in whole or in part, for any other project without giving written notice to Harutunian Engineering, Inc.

DESIGNED BY:	CAS
CHECKED BY:	CAS
APPROVED BY:	CAS
SUBMITTAL DATE:	OCTOBER 2019
SCALE:	

SOUTH AUSTIN REGIONAL WASTEWATER TREATMENT PLANT
ELECTRICAL SUBSTATION NO. 1 REPLACEMENT PROJECT
CIP I.D.# 3333.032

TREE PROTECTION DETAILS

PROJECT NO: 2014-300 | SHT. 787 OF 866 | DWG NO. TD-C-006

EROSION CONTROL NOTES:

1. The contractor shall install erosion/sedimentation controls, tree/natural area protective fencing, and conduct "Pre–Construction" tree fertilization (if applicable) prior to any site preparation work (clearing, grubbing or excavation).
2. The placement of erosion/sedimentation controls shall be in accordance with the Environmental Criteria Manual and the approved Erosion and Sedimentation Control Plan. The COA ESC Plan shall be consulted and used as the basis for a TPDES required SWPPP. If a SWPPP is required, it shall be available for review by the City of Austin Environmental Inspector at all times during construction, including at the Pre–Construction meeting. The checklist below contains the basic elements that shall be reviewed for permit approval by COA EV Plan Reviewers as well as COA EV Inspectors.

   –– Plan sheets submitted to the City of Austin MUST show the following:

   ✓ Direction of flow during grading operations.

   ✓ Location, description, and calculations for off–site flow diversion structures.

   ✓ Areas that will not be disturbed; natural features to be preserved.

   ✓ Delineation of contributing drainage area to each proposed BMP (e.g., silt fence, sediment basin, etc.).

   ✓ Location and type of E&S BMPs for each phase of disturbance.

   ✓ Calculations for BMPs as required.

   ✓ Location and description of temporary stabilization measures.

   ✓ Location of on–site spoils, description of handling and disposal of borrow materials, and description of on–site permanent spoils disposal areas, including size, depth of fill and revegetation procedures.

   ✓ Describe sequence of construction as it pertains to ESC including the following elements:

1. Installation sequence of controls (e.g. perimeter controls, then sediment basins, then temporary stabilization, then permanent, etc.)
2. Project phasing if required (LOC greater than 25 acres)
3. Sequence of grading operations and notation of temporary stabilization measures to be used
4. Schedule for converting temporary basins to permanent WQ controls
5. Schedule for removal of temporary controls
6. Anticipated maintenance schedule for temporary controls

   –– Categorize each BMP under one of the following areas of BMP activity as described below:

   3.1 Minimize disturbed area and protect natural features and soil

   3.2 Control Stormwater flowing onto and through the project

   3.3 Stabilize Soils

   3.4 Protect Slopes

   3.5 Protect Storm Drain Inlets

   3.6 Establish Perimeter Controls and Sediment Barriers

   3.7 Retain Sediment On–Site and Control Dewatering Practices

   3.8 Establish Stabilized Construction Exits

   3.9 Any Additional BMPs

   –– Note the location of each BMP on your site map(s).

   –– For any structural BMPs, you should provide design specifications and details and refer to them.

   –– For more information, see City of Austin Environmental Criteria Manual 1.4.

3. The Placement of tree/natural area protective fencing shall be in accordance with the City of Austin standard Notes for Tree and Natural Area Protection and the approved Grading/Tree and Natural Area Plan.
4. A pre–construction conference shall be held on–site with the contractor, design Engineer/permit applicant and Environmental Inspector after installation of the erosion/sedimentation controls, tree/natural area protection measures and "Pre–Construction" tree fertilization (if applicable) prior to beginning any site preparation work. The owner or owner's representative shall notify the Development Services Department, 512–974–2278 or by email at environmental.inspections@austintexas.gov, at least three days prior to the meeting date. COA approved ESC Plan and TPDES SWPPP (if required) should be reviewed by COA EV Inspector at this time.
5. Any major variation in materials or locations of controls or fences from those shown on the approved plans will require a revision and must be approved by the reviewing Engineer, Environmental Specialist or City Arborist as appropriate. Major revisions must be approved by authorized COA staff. Minor changes to be made as field revisions to the Erosion and Sedimentation Control Plan may be required by the Environmental Inspector during the course of construction to correct control inadequacies.
6. The contractor is required to provide a certified inspector that is either a licensed engineer (or person directly supervised by the licensed engineer) or Certified Professional in Erosion and Sediment Control (CPESC or CPESC – IT), Certified Erosion, Sediment and Stormwater – Inspector (CESSWI or CESSWI – IT) or Certified Inspector of Sedimentation and Erosion Controls (CISEC or CISEC – IT) certification to inspect the controls and fences at weekly or bi–weekly intervals and after one–half (½) inch or greater rainfall events to insure that they are functioning properly. The person(s) responsible for maintenance of controls and fences shall immediately make any necessary repairs to damaged areas. Silt accumulation at controls must be removed when the depth reaches six (6) inches or one–third (⅓) of the installed height of the control whichever is less.
7. Prior to final acceptance by the City, haul roads and waterway crossings constructed for temporary contractor access must be removed, accumulated sediment removed from the waterway and the area restored to the original grade and revegetated. All land clearing debris shall be disposed of in approved spoil disposal sites.
8. All work must stop if a void in the rock substrate is discovered which is; one square foot in total area; blows air from within the substrate and/or consistently receives water during any rain event. At this time it is the responsibility of the Project Manager to immediately contact a City of Austin Environmental Inspector for further investigation.
9. Temporary and Permanent Erosion Control: All disturbed areas shall be restored as noted below:

   A. All disturbed areas to be revegetated are required to place a minimum of six (6) inches of topsoil [see Standard Specification Item No. 601S.3(A)]. Do not add topsoil within the critical root zone of existing trees.

   Topsoil salvaged from the existing site is encouraged for use, but it should meet the standards set forth in 601S.

   An owner/engineer may propose use of onsite salvaged topsoil which does not meet the criteria of Standard Specification 601S by providing a soil analysis and a written statement from a qualified professional in soils, landscape architecture, or agronomy indicating the onsite topsoil will provide an equivalent growth media and specifying what, if any, soil amendments are required.

   Soil amendments shall be worked into the existing onsite topsoil with a disc or tiller to create a well–blended material.

The vegetative stabilization of areas disturbed by construction shall be as follows:

TEMPORARY VEGETATIVE STABILIZATION:

1. From September 15 to March 1, seeding shall be with or include a cool season cover crop: (Western Wheatgrass (Pascopyrum smithii) at 5.6 pounds per acre, Oats (Avena sativa) at 4.0 pounds per acre, Cereal Rye Grain (Secale cereale) at 45 pounds per acre. Contractor must ensure that any seed application requiring a cool season cover crop does not utilize annual ryegrass (Lolium multiflorum) or perennial ryegrass (Lolium perenne). Cool season cover crops are not permanent erosion control.
2. From March 2 to September 14, seeding shall be with hulled Bermuda at a rate of 45 pounds per acre or a native plant seed mix conforming to Item 604S or 609S.
   A. Fertilizer shall be applied only if warranted by a soil test and shall conform to Item No. 606S, Fertilizer. Fertilization should not occur when rainfall is expected or during slow plant growth or dormancy. Chemical fertilizer may not be applied in the Critical Water Quality Zone.
   B. Hydromulch shall comply with Table 1, below.
   C. Temporary erosion control shall be acceptable when the grass has grown at least 1½ inches high with a minimum of 95% total coverage so that all areas of a site that rely on vegetation for temporary stabilization are uniformly vegetated, and provided there are no bare spots larger than 10 square feet.
   D. When required, native plant seeding shall comply with requirements of the City of Austin Environmental Criteria Manual, and Standard Specification 604S or 609S.

Table 1: Hydromulching for Temporary Vegetative Stabilization

MATERIAL	DESCRIPTION	LONGEVITY	TYPICAL APPLICATIONS	APPLICATION RATES
100% or any blend of wood, cellulose, straw, and/or cotton plant material (except no mulch shall exceed 30% paper)	70% or greater Wood/Straw 30% or less Paper or Natural Fibers	0—3 months	Moderate slopes; from flat to 3:1	1,500 to 2,000 lbs per acre

PERMANENT VEGETATIVE STABILIZATION:

1. From September 15 to March 1, seeding is considered to be temporary stabilization only. If cool season cover crops exist where permanent vegetative stabilization is desired, the grasses shall be mowed to a height of less than one–half (½) inch and the area shall be re–seeded in accordance with Table 2 below. Alternatively, the cool season cover crop can be mixed with Bermudagrass or native seed and installed together, understanding that germination of warm–season seed typically requires soil temperatures of 60 to 70 degrees.
2. From March 2 to September 14, seeding shall be with hulled Bermuda at a rate of 45 pounds per acre with a purity of 95% and a minimum pure live seed (PLS) of 0.83. Bermuda grass is a warm season grass and is considered permanent erosion control. Permanent vegetative stabilization can also be accomplished with a native plant seed mix conforming to Item 604S or 609S.
   A. Fertilizer use shall follow the recommendation of a soil test. See Item 606S, Fertilizer. Applications of fertilizer (and pesticide) on City–owned and managed property requires the yearly submittal of a Pesticide and Fertilizer Application Record, along with a current copy of the applicator's license. For current copy of the record template contact the City of Austin's IPM Coordinator.
   B. Hydromulch shall comply with Table 2, below.
   C. Water the seeded areas immediately after installation to achieve germination and a healthy stand of plants that can ultimately survive without supplemental water. Apply the water uniformly to the planted areas without causing displacement or erosion of the materials or soil. Maintain the seedbed in a moist condition favorable for plant growth. All watering shall comply with City Code Chapter 6–4 (Water Conservation), at rates and frequencies determined by a licensed irrigator or other qualified professional, and as allowed by the Austin Water Utility and current water restrictions and water conservation initiatives.
   D. Permanent erosion control shall be acceptable when the grass has grown at least 1½ inches high with a minimum of 95 percent for the non–native mix, and 95 percent coverage for the native mix so that all areas of a site that rely on vegetation for stability must be uniformly vegetated, and provided there are no bare spots larger than 10 square feet.
   E. When required, native plant seeding shall comply with requirements of the City of Austin Environmental Criteria Manual, Items 604S and 609S.

Table 2: Hydromulching for Permanent Vegetative Stabilization

MATERIAL	DESCRIPTION	LONGEVITY	TYPICAL APPLICATIONS	APPLICATION RATES
Bonded Fiber Matrix (BFM)	80% Organic defibrated fibers			
10% Tackifier	6 months	On slopes up to 2:1 and erosive soil conditions	2,500 to 4,000 lbs per acre (see manufacturers recommendations)	
Fiber Reinforced Matrix (FRM)	65% Organic defibrated fibers 25% Reinforcing Fibers or less 10% Tackifier	Up to 12 months	On slopes up to 1:1 and erosive soil conditions	3,000 to 4,500 lbs per acre (see manufacturers recommendations)

10. Developer Information:

    Owner _____

    Phone # _____

    Address _____

    Owner's representative responsible for plan alterations: _____

    Phone # _____

    Person or firm responsible for erosion/sedimentation control maintenance: _____

    Phone # _____

    Person or firm responsible for tree/natural area protection Maintenance: _____

    Phone # _____

11. The contractor shall not dispose of surplus excavated material from the site without notifying the Development Services Department at 512–974–2278 at least 48 hours prior with the location and a copy of the permit issued to receive the material.

CITY OF AUSTIN STANDARD NOTES FOR TREE AND NATURAL AREA PROTECTION

1. All trees and natural areas shown on plan to be preserved shall be protected during construction with temporary fencing.
2. Protective fences shall be erected according to City of Austin Standards for Tree Protection.
3. Protective fences shall be installed prior to the start of any site preparation work (clearing, grubbing or grading), and shall be maintained throughout all phases of the construction project.
4. Erosion and sedimentation control barriers shall be installed or maintained in a manner which does not result in soil build–up within tree drip lines.
5. Protective fences shall surround the trees or group of trees, and will be located at the outermost limit of branches (drip line) , for natural areas, protective fences shall follow the Limit of Construction line, in order to prevent the following:
   A. Soil compaction in the root zone area resulting from vehicular traffic or storage of equipment or materials;
   B. Root zone disturbances due to grade changes (greater than 6 inches cut or fill), or trenching not reviewed and authorized by the City Aborist;
   C. Wounds to exposed roots, trunk or limbs by mechanical equipment;
   D. Other activities detrimental to trees such as chemical storage, cement truck cleaning, and fires.
6. Exceptions to installing fences at tree drip lines may be permitted in the following cases:
   A. Where there is to be an approved grade change, impermeable paving surface, tree well, or other such site development, erect the fence approximately 2 to 4 feet beyond the area disturbed;
   B. Where permeable paving is to be installed within a tree's drip line, erect the fence at the outer limits of the permeable paving area (prior to site grading so that this area is graded separately prior to paving installation to minimized root damage);
   C. Where trees are close to proposed buildings, erect the fence to allow 6 to 10 feet of work space between the fence and the building;
   D. Where there are severe space constraints due to tract size, or other special requirements, contact the City Arborist at 974–1876 to discuss alternatives.

Special Note: For the protection of natural areas, no exceptions to installing fences at the Limit of Construction line will be permitted.

7. Where any of the above exceptions result in a fence being closer than 4 feet to a tree trunk, protect the trunk with strapped–on planking to a height of 8 ft (or to the limits of lower branching) in addition to the reduced fencing provided.
8. Trees approved for removal shall be removed in a manner which does not impact trees to be preserved.
9. Any roots exposed by construction activity shall be pruned flush with the soil. Backfill root areas with good quality top soil as soon as possible. If exposed root areas are not backfilled within 2 days, cover them with organic material in a manner which reduces soil temperature and minimizes water loss due to evaporation.
10. Any trenching required for the installation of landscape irrigation shall be placed as far from existing tree trunks as possible.
11. No landscape topsoil dressing greater than 4 inches shall be permitted within the drip line of trees. No soil is permitted on the root flare of any tree.
12. Pruning to provide clearance for structures, vehicular traffic and equipment shall take place before damage occurs (ripping of branches, etc.).
13. All finished pruning shall be done according to recognized, approved standards of the industry (Reference the National Arborist Association Pruning Standards for Shade Trees available on request from the City Arborist).
14. Deviations from the above notes may be considered ordinance violations if there is substantial non–compliance or if a tree sustains damage as a result.

SEQUENCE OF CONSTRUCTION

The following sequence of construction shall be used for all development. The applicant is encouraged to provide any additional details appropriate for the particular development.

1. Temporary erosion and sedimentation controls are to be installed as indicated on the approved site plan or subdivision construction plan and in accordance with the Erosion Sedimentation Control Plan (ESC) and Stormwater Pollution Prevention Plan (SWPPP) that is required to be posted on the site. Install tree protection, initiate tree mitigation measures and conduct "Pre – Construction" tree fertilization (if applicable).
2. The Environmental Project Manager or Site Supervisor must contact the Development Services Department, Environmental Inspection, at 512–974–2278, 72 hours prior to the scheduled date of the required on–site preconstruction meeting.
3. The Environmental Project Manager, and/or Site Supervisor, and/or Designated Responsible Party, and the General Contractor will follow the Erosion Sedimentation Control Plan (ESC) and Storm Water Pollution Prevention Plan (SWPPP) posted on the site. Temporary erosion and sedimentation controls will be revised, if needed, to comply with City Inspectors' directives, and revised construction schedule relative to the water quality plan requirements and the erosion plan.
4. Rough grade the pond(s) at 100% proposed capacity. Either the permanent outlet structure or a temporary outlet must be constructed prior to development of embankment or excavation that leads to ponding conditions. The outlet system must consist of a sump pit outlet and an emergency spillway meeting the requirements of the Drainage Criteria Manual and/or the Environmental Criteria Manual, as required. The outlet system shall be protected from erosion and shall be maintained throughout the course of construction until installation of the permanent water quality pond(s).
5. Temporary erosion and sedimentation controls will be inspected and maintained in accordance with the Erosion Sedimentation Control Plan (ESC) and Storm Water Pollution Prevention Plan (SWPPP) posted on the site.
6. Begin site clearing/construction (or demolition) activities.
7. In the Barton Springs Zone, the Environmental Project Manager or Site Supervisor will schedule a mid–construction conference to coordinate changes in the construction schedule and evaluate effectiveness of the erosion control plan after possible construction alterations to the site. Participants shall include the City Inspector, Project Engineer, General Contractor and Environmental Project Manager or Site Supervisor. The anticipated completion date and final construction sequence and inspection schedule will be coordinated with the appropriate City Inspector.
8. Permanent water quality ponds or controls will be cleaned out and filter media will be installed prior to/concurrently with revegetation of site.
9. Complete construction and start revegetation of the site and installation of landscaping.
10. Upon completion of the site construction and revegetation of a project site, the design engineer shall submit an engineer's letter of concurrence bearing the engineer's seal, signature, and date to the Development Services Department indicating that construction, including revegetation, is complete and in substantial compliance with the approved plans. After receiving this letter, a final inspection will be scheduled by the appropriate City inspector.
11. Upon completion of landscape installation of a project site, the Landscape Architect shall submit a letter of concurrence to the Development Services Department indicating that the required landscaping is complete and in substantial conformity with the approved plans. After receiving this letter, a final inspection will be scheduled by the appropriate City inspector.
12. After a final inspection has been conducted by the City inspector and with approval from the City inspector, remove the temporary erosion and sedimentation controls and complete any necessary final revegetation resulting from removal of the controls. Conduct any maintenance and rehabilitation of the water quality ponds or controls.

REMEDIAL TREE CARE NOTES AERATION AND SUPPLEMENTAL NUTRIENT REQUIREMENTS FOR TREES WITHIN CONSTRUCTION AREAS

As a component of an effective remedial tree care program per Environmental Criteria Manual section 3.5.4, preserved trees within the limits of construction may require soil aeration and supplemental nutrients. Soil and/or foliar analysis should be used to determine the need for supplemental nutrients. The City Arborist may require these analyses as part of a comprehensive tree care plan. Soil pH shall be considered when determining the fertilization composition as soil pH influences the tree's ability to uptake nutrients from the soil. If analyses indicate the need for supplemental nutrients, then humate/nutrient solutions with mycorrhizae components are highly recommended. In addition, soil analysis may be needed to determine if organic material or beneficial microorganisms are needed to improve soil health. Materials and methods are to be approved by the City Arborist (512–974–1876) prior to application. The owner or general contractor shall select a fertilization contractor and iensure coordination with the City Arborist.

Pre–construction treatment should be applied in the appropriate season, ideally the season preceding the proposed construction. Minimally, areas to be treated include the entire critical root zone of trees as depicted on the City approved plans. Treatment should include, but not limited to, fertilization, soil treatment, mulching, and proper pruning.

Post–construction treatment should occur during final revegetation or as determined by a qualified arborist after construction. Construction activities often result in a reduction in soil macro and micro pores and an increase in soil bulk density. To ameliorate the degraded soil conditions, aeration via water and/or air injected into the soil is needed or by other methods as approved by the City Arborist. The proposed nutrient mix specifications and soil and/or foliar analysis results need to be provided to and approved by the City Arborist prior to application (Fax # 512–974–3010). Construction which will be completed in less than 90 days may use materials at ½ recommended rates. Alternative organic fertilizer materials are acceptable when approved by the City Arborist. Within 7 days after fertilization is performed, the contractor shall provide documentation of the work performed to the City Arborist, Planning and Development Review Department. P.O. Box 1088, Austin, TX 78767. This note should be referenced as item #1 in the Sequence of Construction.

BAR LENGTH ON ORIGINAL DRAWING EQUALS ONE INCH, ADJUST SCALE ACCORDINGLY.

CAS CONSULTING & SERVICES, INC.
CIVIL ENGINEERING | PROGRAM MANAGEMENT | CONSTRUCTION MANAGEMENT
7908 Cameron Road | Austin, TX 78754 |REG. NO. F-003572
Main: 512.836.2388 | Fax: 512.836.4515

STATE OF TEXAS — MICHAEL C. MERIWETHER — 58563 — LICENSED PROFESSIONAL ENGINEER
9/27/2019

NO.	DATE:	DESCRIPTION

HARUTUNIAN ENGINEERING INCORPORATED
TEXAS FIRM REGISTRATION NUMBER F–2408
ENGINEERING AND ENVIRONMENTAL CONSULTANTS
8100 CROSS PARK DRIVE
AUSTIN, TEXAS 78754

REUSE OF DOCUMENTS
This document, and the designs incorporated herein, is an instrument of professional service that has been developed, designed and prepared by Harutunian Engineering, Inc., and is not to be used, in whole or in part, for any other project without giving written notice to Harutunian Engineering, Inc.

DESIGNED BY:	CAS
CHECKED BY:	CAS
APPROVED BY:	CAS
SUBMITTAL DATE:	OCTOBER 2019
SCALE:	

SOUTH AUSTIN REGIONAL WASTEWATER TREATMENT PLANT
ELECTRICAL SUBSTATION NO. 1 REPLACEMENT PROJECT
CIP I.D.# 3333.032

ENVIRONMENTAL NOTES

PROJECT NO: 2014–300 | SHT. 788 OF 866 | DWG NO. TD–C–007

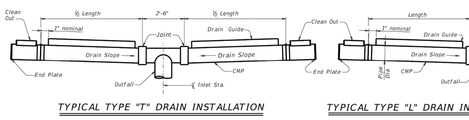

TYPICAL TYPE "T" DRAIN INSTALLATION

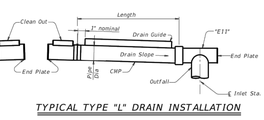

TYPICAL TYPE "L" DRAIN INSTALLATION

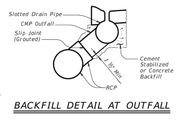

BACKFILL DETAIL AT OUTFALL

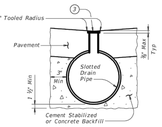

TYPICAL BACKFILL DETAIL

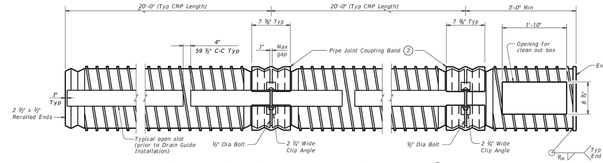

SLOTTED CORRUGATED METAL PIPE (CMP) DETAIL 1

Showing Type IR pipe

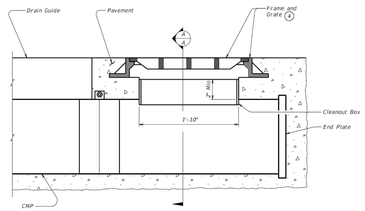

CLEAN OUT BOX ELEVATION

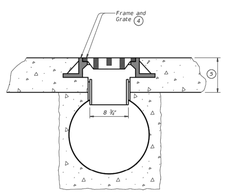

SECTION A-A

1. Provide 16 gauge (Min) x 12" to 36" Dia Corrugated Metal Pipe (Type 1 – 2 ½" x ½" corrugations or Type IR – ½" x ½" x 7 ½" corrugations)
2. Alternate methods of joining lengths of pipe, as recommended by the manufacturer, may be used with the approval of the Engineer.
3. Wood Strip (Nom ¾" Max x 2 ½"). Wood strip may be omitted if suitable protection is provided during pavement placement.
4. Install frame and grate flush with pavement and centered over clean out box.
5. See pavement details for slab thickness.

FABRICATION NOTES:

Provide circular corrugated steel pipe, galvanized or aluminized, in accordance with Item 460, "Corrugated Metal Pipe".
Provide drain guide assemblies conforming to Item 474, "Linear Drains". Fabricate bearing bars, cross bar spacers, end plates, and clean out boxes from ¾" plate, ASTM A36. Galvanize in accordance with Item 445, "Galvanizing". Furnish slotted drain in 20'-0" lengths, when practical, to minimize number of joints.
Furnish pedestrian cap when specified in the plans.

INSTALLATION NOTES:

Backfill trenches for slotted drains and outfall pipe with low strength concrete (cement stabilized sand) containing 470 pounds per cubic yard of cement stabilized backfill as shown or directed by the Engineer.
Place suitable compressible material in the outfall connection slip joint, to retain grout during curing.
Provide heavy duty frame and grate from one of the following, or approved equal (clear opening 22" x 8 ½" Min, 25 ½" x 12 Max).
Neenah R-3471
EJ V-4274
USF 4621 frame and 6296 grate

GENERAL NOTES:

Unless otherwise shown on the plans, the Contractor may furnish any of the designs as shown.
Frame and grate is subsidiary to Slotted Drain.

SHEET 1 OF 2

Texas Department of Transportation | Bridge Division Standard

ROADWAY LINEAR DRAIN (SLOTTED DRAIN)

SD

FILE:	sdstd02.dgn	dn: TxDOT	ck: TxDOT	dw: DEC	ck: AES
©TxDOT	May 2014	CONT	SECT	JOB	HIGHWAY
REVISIONS		DIST	COUNTY		SHEET NO.

DISCLAIMER: The use of this standard is governed by the "Texas Engineering Practice Act". No liability of any kind is assumed by the Texas Department of Transportation for any damages resulting from its use or modification. This standard is furnished in connection with, but not limited to, the following TxDOT projects: TxDOT assumes no responsibility for the conversion of this standard to other formats or for incorrect results or damages resulting from its use.

DATE:
FILE:

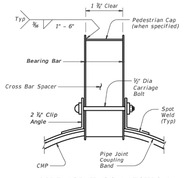

PIPE JOINT CONNECTION TRANSVERSE SECTION

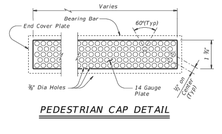

PEDESTRIAN CAP DETAIL

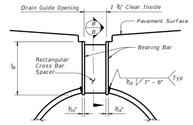

STANDARD HEIGHT

Showing Rectangular Spacers

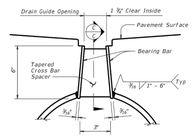

STANDARD HEIGHT

Showing Tapered Spacers

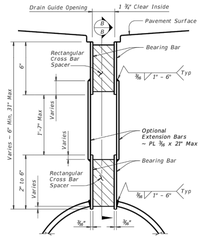

VARIABLE HEIGHT

Showing Rectangular Spacers and Extension

TYPICAL SECTIONS THRU DRAIN GUIDE INSTALLATION

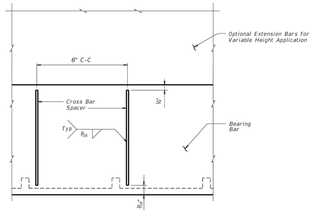

SECTION B-B (WITH RECTANGULAR SPACERS)

Showing Installation of Cross Bar Spacers in Longitudinal Section

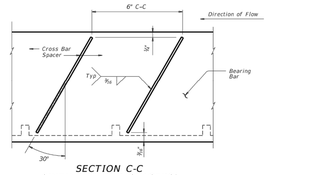

SECTION C-C (WITH TAPERED SPACERS)

Showing Installation of Cross Bar Spacers in Longitudinal Section

SHEET 2 OF 2

Texas Department of Transportation | Bridge Division Standard

ROADWAY LINEAR DRAIN (SLOTTED DRAIN)

SD

FILE:	sdstd02.dgn	dn: TxDOT	ck: TxDOT	dw: DEC	ck: AES
©TxDOT	May 2014	CONT	SECT	JOB	HIGHWAY
REVISIONS		DIST	COUNTY		SHEET NO.

DISCLAIMER: The use of this standard is governed by the "Texas Engineering Practice Act". No liability of any kind is assumed by the Texas Department of Transportation for any damages resulting from its use or modification. This standard is furnished in connection with, but not limited to, the following TxDOT projects: TxDOT assumes no responsibility for the conversion of this standard to other formats or for incorrect results or damages resulting from its use.

DATE:
FILE:

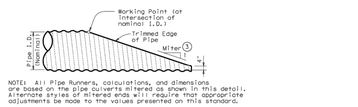

NOTE: All Pipe Runners, calculations, and dimensions are based on the pipe culverts mitered as shown in this detail. Alternate styles of mitered ends will require that appropriate adjustments be made to the values presented on this standard.

SIDE ELEVATION OF TYPICAL PIPE CULVERT MITER

(Showing Corrugated Metal Pipe Culvert. Details of Concrete Pipe Culvert are similar.)

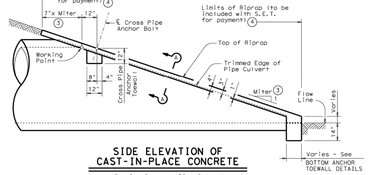

SIDE ELEVATION OF CAST-IN-PLACE CONCRETE

(Showing Concrete Pipe Culvert. Details of Corrugated Metal Pipe Culvert are similar. Pipe Runners not shown for clarity)

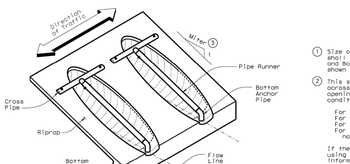

ISOMETRIC VIEW OF TYPICAL INSTALLATION

(Showing Installation with no skew.)

CROSS PIPE LENGTHS & PIPE RUNNER LENGTHS 1 2

Nominal Culvert I.D.	Pipe Culvert Span ~ G	Cross Pipe Length	Pipe Runner Length									
			3:1 Side Slope				4:1 Side Slope				6:1 Side Slope	
			0° Skew	15° Skew	30° Skew	45° Skew	0° Skew	15° Skew	30° Skew	45° Skew	0° Skew	15° Skew	30° Skew	45° Skew
24"	1'- 7"	3'- 5"	N/A	N/A	N/A	5'-10"	N/A	N/A	N/A	8'- 1"	N/A	N/A	N/A	12'- 9"
27"	1'- 8"	3'- 8"	N/A	N/A	5'- 5"	6'-11"	N/A	N/A	7'- 7"	9'- 7"	N/A	N/A	11'-11"	14'-11"
30"	1'-10"	3'-11"	N/A	N/A	6'- 4"	8'- 0"	N/A	N/A	8'- 9"	11'- 0"	N/A	N/A	13'- 8"	17'- 0"
33"	1'-11"	4'- 2"	6'- 2"	6'- 5"	7'- 3"	9'- 1"	8'- 6"	8'-10"	10'- 0"	12'- 5"	13'- 3"	13'- 9"	15'- 5"	19'- 2"
36"	2'- 1"	4'- 5"	6'-11"	7'- 3"	8'- 2"	10'- 2"	9'- 6"	9'-11"	11'- 2"	13'-10"	14'- 9"	15'- 3"	17'- 2"	21'- 3"
42"	2'- 4"	4'-11"	8'- 6"	8'-10"	9'-11"	12'- 4"	11'- 7"	12'- 0"	13'- 6"	16'- 8"	17'- 9"	18'- 5"	20'- 8"	25'- 7"
48"	2'- 7"	5'- 5"	10'- 1"	10'- 5"	11'- 9"	N/A	13'- 7"	14'- 2"	15'-10"	N/A	20'- 9"	21'- 6"	24'- 2"	N/A
54"	3'- 0"	5'-11"	11'- 8"	12'- 1"	N/A	N/A	15'- 8"	16'- 3"	N/A	N/A	23'-10"	24'- 8"	N/A	N/A
60"	3'- 3"	6'- 5"	13'- 3"	N/A	N/A	N/A	17'- 9"	N/A	N/A	N/A	26'-10"	N/A	N/A	N/A

TYPICAL PIPE CULVERT MITERS 3

Slope	0° Skew	15° Skew	30° Skew	45° Skew
3:1	3, 1086:1	3, 4641:1	4, 2431:1	5, 6571:1
4:1	4:1	4, 4161:1	4, 6178:1	5, 6571:1
6:1	6:1	6, 2121:1	6, 9281:1	8, 4851:1

CONDITIONS WHERE PIPE RUNNERS ARE NOT REQUIRED 2

Nominal Culvert I.D.	Single Pipe Culvert	Multiple Pipe Culverts
12" thru 21"	Skews thru 45°	Skews thru 45°
24"	Skews thru 45°	Skews thru 30°
27"	Skews thru 30°	Skews thru 15°
30"	Skews thru 15°	Skews thru 15°
33"	Skews thru 15°	Always required
36"	Normal (No Skew)	Always required
42" to 60"	Always required	Always required

STANDARD PIPE SIZES & MAX PIPE RUNNER LENGTHS 1

Pipe Size	Pipe O.D.	Pipe I.D.	Max Pipe Runner Length
2" STD	2,375"	2,067"	N/A
3" STD	3,500"	3,068"	10'- 0"
4" STD	4,500"	4,026"	19'- 8"
5" STD	5,563"	5,047"	34'- 2"

ESTIMATED CONCRETE RIPRAP QUANTITIES (CY) 5

Nominal Culvert I.D.	3:1 Side Slope					4:1 Side Slope					6:1 Side Slope				
	0° Skew	15° Skew	30° Skew	45° Skew		0° Skew	15° Skew	30° Skew	45° Skew		0° Skew	15° Skew	30° Skew	45° Skew	
12"	0.4	0.4	0.5	0.5		0.5	0.5	0.5	0.6		0.7	0.7	0.7	0.8	
15"	0.5	0.5	0.5	0.6		0.6	0.6	0.6	0.7		0.7	0.7	0.8	0.9	
18"	0.5	0.5	0.6	0.6		0.6	0.7	0.7	0.8		0.8	0.8	0.9	1.0	
21"	0.6	0.6	0.6	0.7		0.7	0.7	0.8	0.9		0.9	0.9	1.0	1.2	
24"	0.6	0.7	0.7	0.8		0.8	0.8	0.8	1.0		1.0	1.0	1.1	1.3	
27"	0.7	0.7	0.8	0.9		0.8	0.9	0.9	1.1		1.1	1.1	1.2	1.4	
30"	0.8	0.8	0.8	0.9		0.9	0.9	1.0	1.2		1.2	1.2	1.3	1.6	
33"	0.8	0.8	0.9	1.0		1.0	1.0	1.1	1.3		1.3	1.4	1.5	1.7	
36"	0.9	0.9	0.9	1.1		1.1	1.1	1.2	1.4		1.4	1.5	1.6	1.8	
42"	1.0	1.0	1.1	1.3		1.2	1.3	1.3	1.6		1.6	1.7	1.8	2.1	
48"	1.1	1.1	1.2	N/A		1.4	1.4	1.5	N/A		1.9	1.9	2.1	N/A	
54"	1.3	1.3	N/A	N/A		1.6	1.6	N/A	N/A		2.1	2.1	N/A	N/A	
60"	1.4	N/A	N/A	N/A		1.7	N/A	N/A	N/A		2.3	N/A	N/A	N/A	

1. Size of Pipe Runner shall be as shown in the tables. Cross Pipe shall be the same size as the Pipe Runner. Cross Pipe Stub Out and Bottom Anchor Pipe shall be the next smaller size pipe as shown in the STANDARD PIPE SIZES table.
2. This standard allows for the placement of only one pipe runner across each culvert pipe opening. In order to limit the clear opening to be traversed by an errant vehicle, the following conditions must be met:

   For 60" culvert pipes, the skew must not exceed 0°.
   For 54" culvert pipes, the skew must not exceed 15°.
   For 48" culvert pipes, the skew must not exceed 30°.
   For all culvert pipe sizes 42" and less, the skew must not exceed 45°.

   If the above conditions cannot be met, the designer should consider using a safety end treatment with flared wings. For further information, refer to the TxDOT "Roadway Design Manual".
3. Miter = Slope of Mitered Pipe Culvert End
4. Riprap placed beyond the limits shown will be paid as Concrete Riprap in accordance with Item 432, "Riprap".
5. Quantities shown are for one end of one reinforced Concrete Pipe Culvert. For multiple Pipe Culverts or for Corrugated Metal Pipe Culverts, quantities will need to be adjusted. Riprap quantities are for Contractor's information only.

SHEET 1 OF 2

Texas Department of Transportation | Bridge Division Standard

SAFETY END TREATMENT
FOR 12" DIA TO 60" DIA PIPE CULVERTS
TYPE II – CROSS DRAINAGE

SETP-CD

FILE:	setpctxdw.dgn	dn: GAF	ck: CAT	dw: JRP	ck: GAF
©TxDOT	February 2010	CONT	SECT	JOB	HIGHWAY
REVISIONS		DIST	COUNTY		SHEET NO.

DISCLAIMER: The use of this standard is governed by the "Texas Engineering Practice Act". No liability of any kind is assumed by the Texas Department of Transportation for any damages resulting from its use or modification. This standard is furnished in connection with, but not limited to, the following TxDOT projects: TxDOT assumes no responsibility for the conversion of this standard to other formats or for incorrect results or damages resulting from its use.

DATE:
FILE:

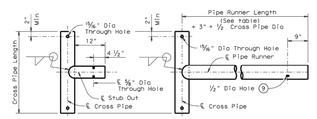

OPTION A1 OPTION A2

CROSS PIPE AND CONNECTIONS DETAILS

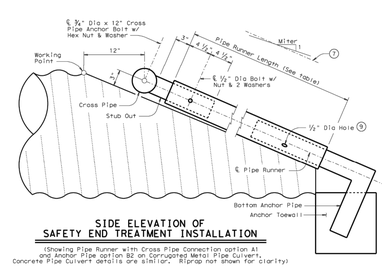

SIDE ELEVATION OF SAFETY END TREATMENT INSTALLATION

(Showing Pipe Runner with Cross Pipe Connection option A1 and Anchor Pipe option B2 on Corrugated Metal Pipe Culvert. Concrete Pipe Culvert details are similar. Riprap not shown for clarity)

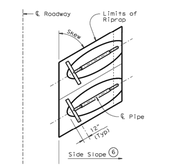

PLAN OF SKEWED INSTALLATION

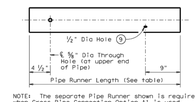

NOTE: The separate Pipe Runner shown is required when Cross Pipe Connection Option A1 is used.

PIPE RUNNER DETAILS

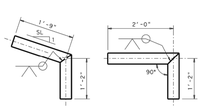

OPTION B1 OPTION B2

BOTTOM ANCHOR PIPE DETAILS 10

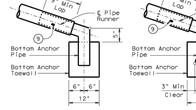

OPTION B1 OPTION B2

BOTTOM ANCHOR TOEWALL DETAILS

(Culvert & Riprap not shown for clarity)

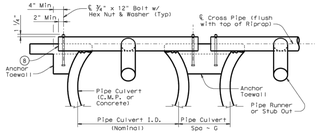

SHOWING CROSS PIPE & ANCHOR TOEWALL

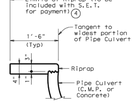

SHOWING TYPICAL PIPE CULVERT & RIPRAP

SECTION A-A

4. Riprap placed beyond the limits shown will be paid as Concrete Riprap in accordance with Item 432, "Riprap".
6. Recommended values of side slope are 3:1, 4:1, & 6:1. All quantities, calculations, and dimensions shown herein are based on these recommended values. Slope of 3:1 or flatter is required for vehicle safety.
7. Note that actual slope of Pipe Runner may vary slightly from Side Slope of Riprap and trimmed Culvert Pipe edge.
8. Care shall be taken to ensure that Riprap concrete does not flow into the Cross Pipe so as to permit disassembly of the bolted connection to allow cleanout access.
9. After installation, the ½" hole shall be inspected to ensure that the lap of the Pipe Runner with the Bottom Anchor Pipe is adequate.
10. As fabricator's option, a heat bend to a smooth 5" radius or a manufactured elbow (of the same material as the Runner) may be substituted for the mitered and welded joint in the Bottom Anchor Pipe.

GENERAL NOTES:

Pipe Runners are designed for a traversing load of 1,800 pounds at yield as recommended by Research Report 280-1, "Safety Treatment of Roadside Cross-Drainage Structures", Texas Transportation Institute, March 1981.
The Safety End Treatments shown herein are intended for use in those installations where out of control vehicles are likely to traverse the openings approximately perpendicular to the Pipe Runners.
Riprap and all necessary inverts shall be Concrete Riprap conforming to the requirements of Item 432, "Riprap".
Symmetrical fillets as on the "Fibers for Concrete" Material Producer List (MPL) may be used in lieu of steel reinforcing in riprap concrete unless noted otherwise.
Payment for riprap and toewall is included in the Price Bid for each Safety End Treatment.
Pipe Runners, Cross Pipes, and Anchor Pipes shall conform to the requirements of ASTM A53 (Type E or S, Grade B), ASTM A500 (Grade B), or API 5L.
Bolts and nuts shall conform to ASTM A307.
All steel components, except concrete reinforcing, shall be galvanized after fabrication. Galvanizing damaged during transport or construction shall be repaired in accordance with the specifications.

SHEET 2 OF 2

Texas Department of Transportation | Bridge Division Standard

SAFETY END TREATMENT
FOR 12" DIA TO 60" DIA PIPE CULVERTS
TYPE II – CROSS DRAINAGE

SETP-CD

FILE:	setpctxdw.dgn	dn: GAF	ck: CAT	dw: JRP	ck: GAF
©TxDOT	February 2010	CONT	SECT	JOB	HIGHWAY
REVISIONS		DIST	COUNTY		SHEET NO.

BAR LENGTH ON ORIGINAL DRAWING EQUALS ONE INCH, ADJUST SCALE ACCORDINGLY.

CAS CONSULTING & SERVICES, INC.
CIVIL ENGINEERING | PROGRAM MANAGEMENT | CONSTRUCTION MANAGEMENT
7908 Cameron Road | Austin, TX 78754 | REG. NO. F-003572
Main: 512.836.2388 | Fax: 512.836.4515

STATE OF TEXAS
MICHAEL C. MERWETHER
58563
LICENSED PROFESSIONAL ENGINEER

9/27/2019

NO.	DATE:	DESCRIPTION

HARUTUNIAN ENGINEERING INCORPORATED
TEXAS FIRM REGISTRATION NUMBER F-2408
ENGINEERING AND ENVIRONMENTAL CONSULTANTS
8100 CROSS PARK DRIVE
AUSTIN, TEXAS 78754

REUSE OF DOCUMENTS

This document, and the designs incorporated herein, is an instrument of professional service that has been developed, designed and prepared by Harutunian Engineering, Inc., and is not to be used, in whole or in part, for any other project without giving written notice to Harutunian Engineering, Inc.

DESIGNED BY:	CAS
CHECKED BY:	CAS
APPROVED BY:	CAS
SUBMITTAL DATE:	OCTOBER 2019
SCALE:	

SOUTH AUSTIN REGIONAL WASTEWATER TREATMENT PLANT
ELECTRICAL SUBSTATION NO. 1 REPLACEMENT PROJECT
CIP I.D.# 3333.032

DRAINAGE DETAILS

PROJECT NO: 2014-300 | SHT. 789 OF 866 | DWG NO. TD-C-008

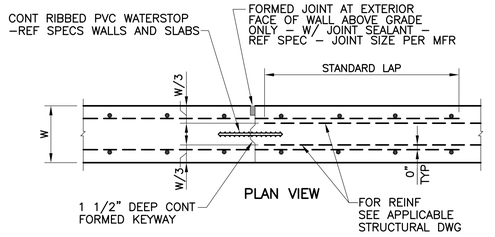

NOTE:

APPLIES TO WALLS / SLABS WHEN THICKNESS IS 12" OR GREATER

TYPICAL CONSTRUCTION JOINT (CJ) DETAIL CONCRETE WALL & SLAB 1

NO SCALE

CORNER BARS – SAME SIZE & SPACING AS HORIZONTAL BARS

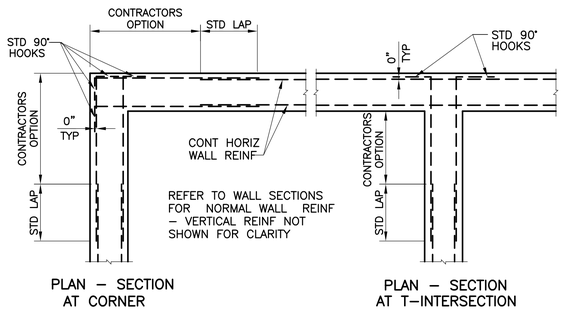

NOTE:

1. DETAILS APPLY WHERE HORIZONTAL BEAM REINFORCEMENT IS NOT DENOTED ON PLANS AS CONTINUOUS AROUND THE CORNERS.
2. VERTICAL REINF NOT SHOWN FOR CLARITY.

TYPICAL CORNER BAR DETAILS 2

NO SCALE

STANDARD LAP LENGTHS		
BAR SIZE	BAR POSITION	
	CASE 1	CASE 2
#3	18"	24"
#4	24"	32"
#5	30"	40"
#6	36"	48"
#7	54"	70"
#8	62"	80"
#9	70"	90"
#10	80"	102"
#11	88"	114"

CASE 1: HORIZONTAL BARS WITH LESS THAN 12" OF CONC BELOW BARS, AND ALL VERTICAL BARS.

CASE 2: HORIZONTAL BARS W/ 12" OR MORE CONC BELOW BARS.

Fc = 4 KSI
Fy = 60 KSI

STANDARD TENSION LAP LENGTHS 3

NO SCALE

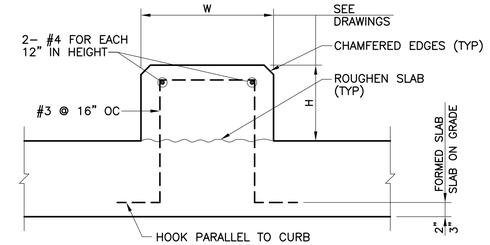

CURBS 10" WIDE AND WIDER

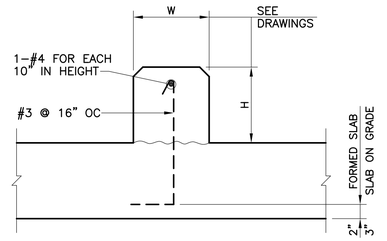

CURBS LESS THAN 10" WIDE

CONCRETE CURB DETAIL 4

NO SCALE

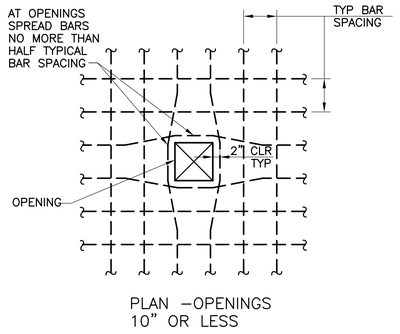

TYPICAL CONCRETE REINFORCING AT SMALL OPENINGS IN SLAB 5

NO SCALE

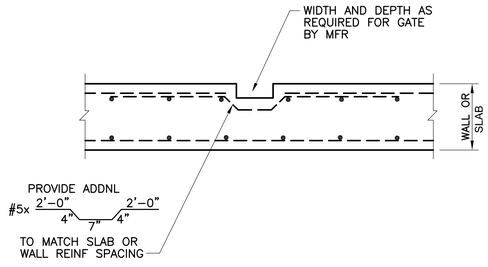

TYPICAL DETAIL AT RECESSED GATE SUPPORT IN WALL OR SLAB 6

NO SCALE

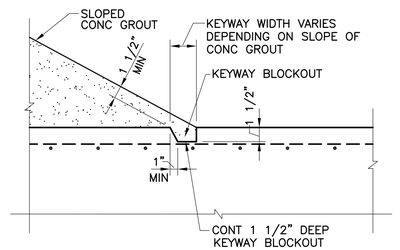

TYPICAL BLOCKOUT DETAIL AT SLOPED GROUT 7

NO SCALE

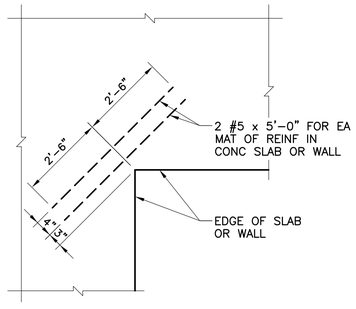

NOTE:

PROVIDE ADDL REINF BARS AT ALL SLAB AND WALL CONDITIONS WITH RE–ENTRANT CORNERS.

TYPICAL CONCRETE RE–ENTRANT CORNER REINFORCEMENT DETAIL 8

NO SCALE

BAR LENGTH ON ORIGINAL DRAWING EQUALS ONE INCH, ADJUST SCALE ACCORDINGLY.

Jose I. Guerra, Inc.
Consulting Engineers
2401 South IH–35 Suite 210
Austin, Texas 78741
(512) 445–2090
Structural ◆ Civil ◆ Mechanical ◆ Electrical
TBPE FIRM F–3

STATE OF TEXAS
KENNETH W. HANKS
97528
LICENSED
PROFESSIONAL ENGINEER
4/18/19

NO.	DATE:	DESCRIPTION

HARUTUNIAN ENGINEERING INCORPORATED
TEXAS FIRM REGISTRATION NUMBER F–2408
ENGINEERING AND ENVIRONMENTAL CONSULTANTS
8100 CROSS PARK DRIVE
AUSTIN, TEXAS 78754

REUSE OF DOCUMENTS
This document, and the designs incorporated herein, is an instrument of professional service that has been developed, designed and prepared by Harutunian Engineering, Inc., and is not to be used, in whole or in part, for any other project without giving written notice to Harutunian Engineering, Inc.

DESIGNED BY:	KH
CHECKED BY:	YC
APPROVED BY:	YC
SUBMITTAL DATE:	OCTOBER 2019
SCALE:	AS SHOWN

SOUTH AUSTIN REGIONAL WASTEWATER TREATMENT PLANT
ELECTRICAL SUBSTATION NO. 1 REPLACEMENT PROJECT
CIP I.D.# 3333.032

STRUCTURAL TYPICAL DETAILS
SHEET 1 OF 4

PROJECT NO: 2014–300 | SHT. 790 OF 866 | DWG NO. TD–S–001

CADFILE:F:\16051_SAR WWTP Elec Substation No 1\DRAWINGS\CAD\TD–S–001.dwg Plotted: Sep 26, 19 @ 10:36 am by: rhinojosa Scale: 1:16

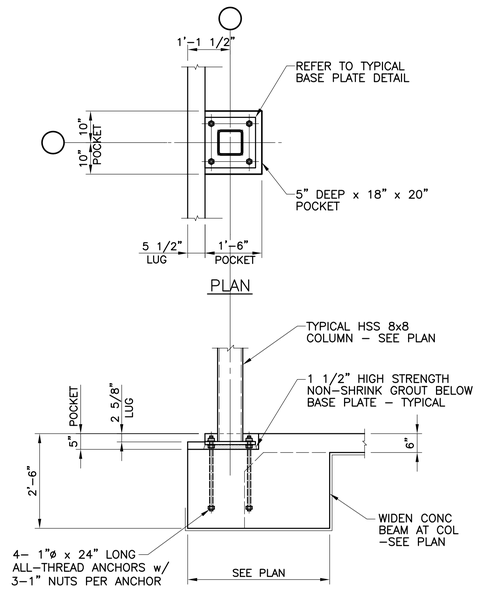

TYPICAL COLUMN BASE PLATE TO FOUNDATION CONNECTION DETAIL — 1

NO SCALE

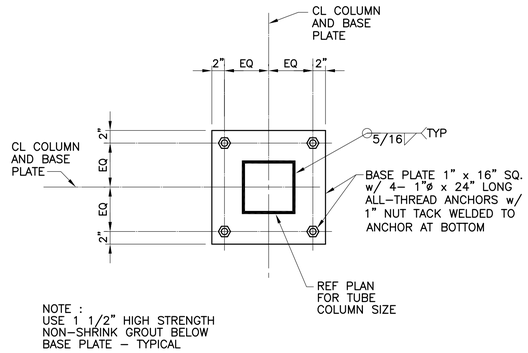

TYPICAL BASE PLATE DETAIL — 2

NO SCALE

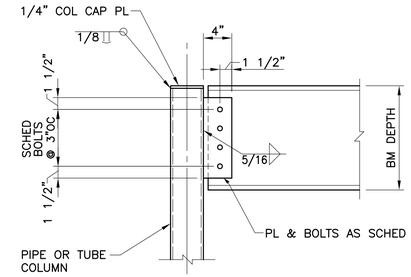

TYPICAL STEEL BEAM TO TUBE COLUMN CONNECTION — 3

NO SCALE

BEAM-TO-COLUMN AND BEAM-TO-BEAM CONNECTION SCHEDULE		
BEAM DEPTH	FRAMING ANGLES OR PLATE	BOLTS PER LEG
W8 x... C8 x... W10 x...	PL 1/4 x 4 x 6"	2 - 3/4" DIA
W12 x...	PL 1/4 x 4 x 9"	3 - 3/4" DIA
W14 x...	PL 3/8 x 4 x 9"	3 - 3/4" DIA
W16 x...	PL 3/8 x 4 x 1'-0"	4 - 3/4" DIA
W18 x...	PL 3/8 x 4 x 1'-3"	5 - 3/4" DIA
W21 x...	PL 1/2 x 4 x 1'-6"	6 - 7/8" DIA
W24 x...	PL 1/2 x 4 x 1'-6"	6 - 7/8" DIA

ASTM A490N BOLTS IN STANDARD HOLES

BEAM-TO-COLUMN AND BEAM-TO-BEAM — 4

NO SCALE

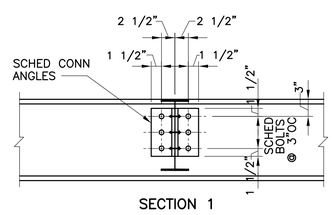

TYPICAL STEEL BEAM TO STEEL BEAM CONNECTION — 5

NO SCALE

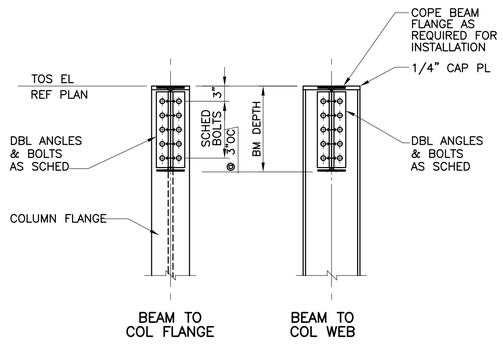

TYPICAL STEEL BEAM TO WF COLUMN CONNECTION — 6

NO SCALE

BAR LENGTH ON ORIGINAL DRAWING EQUALS ONE INCH, ADJUST SCALE ACCORDINGLY.

Jose I. Guerra, Inc.
Consulting Engineers
2401 South IH-35 Suite 210
Austin, Texas 78741
(512) 445-2090
Structural ◆ Civil ◆ Mechanical ◆ Electrical
TBPE FIRM F-3

STATE OF TEXAS — KENNETH W. HANKS — 97528 — LICENSED PROFESSIONAL ENGINEER — 4/18/19

NO.	DATE:	DESCRIPTION

HARUTUNIAN ENGINEERING INCORPORATED
TEXAS FIRM REGISTRATION NUMBER F-2408
ENGINEERING AND ENVIRONMENTAL CONSULTANTS
8100 CROSS PARK DRIVE
AUSTIN, TEXAS 78754

REUSE OF DOCUMENTS
This document, and the designs incorporated herein, is an instrument of professional service that has been developed, designed and prepared by Harutunian Engineering, Inc., and is not to be used, in whole or in part, for any other project without giving written notice to Harutunian Engineering, Inc.

DESIGNED BY: KH
CHECKED BY: YC
APPROVED BY: YC
SUBMITTAL DATE: OCTOBER 2019
SCALE: AS SHOWN

SOUTH AUSTIN REGIONAL WASTEWATER TREATMENT PLANT
ELECTRICAL SUBSTATION NO. 1 REPLACEMENT PROJECT
CIP I.D.# 3333.032

STRUCTURAL TYPICAL DETAILS
SHEET 2 OF 4

PROJECT NO: 2014-300 | SHT. 791 OF 866 | DWG NO. TD-S-002

CADFILE:F:\16051_SAR WWTP Elec Substation No 1\DRAWINGS\CAD\TD-S-002.dwg Plotted: Sep 26, 19 @ 10:37 am by: rhinojosa Scale: 1:16

CONCRETE MASONRY NOTES

1. ALL LOAD BEARING AND NON-LOAD BEARING CONCRETE MASONRY SHALL BE IN ACCORDANCE WITH ALL THE REQUIREMENTS OF THE LOCAL BUILDING CODES AND THE NATIONAL CONCRETE MASONRY ASSOCIATION.
2. HOLLOW CONCRETE MASONRY UNITS SHALL BE LIGHT WEIGHT GRADE N UNITS, CONFORMING TO ASTM C 90, LATEST EDITION.
3. MASONRY UNITS SHALL HAVE A MINIMUM COMPRESSIVE STRENGTH OF 2000 PSI WHEN TESTED IN ACCORDANCE WITH ASTM C-140, "METHODS OF SAMPLING AND TESTING CONCRETE MASONRY UNITS". (f'm = 1500 PSI).
4. MORTAR FOR MASONRY SHALL BE BY PROPORTION IN ACCORDANCE WITH ASTM C 270 TYPE "S", EXCEPT ALL MORTAR BELOW GRADE SHALL BE TYPE "M".
5. REINFORCING STEEL SHALL CONFORM TO ASTM A-615, GRADE 60.
6. UNLESS OTHERWISE NOTED, ALL LOAD BEARING MASONRY WALLS AND EXTERIOR WALLS SHALL BE REINFORCED WITH 9 GA., MILL GALVANIZED, HORIZONTAL WIRE REINFORCEMENT (TRUSS TYPE) EMBEDDED IN MORTAR JOINTS AT 16" OC WIRE REINFORCEMENT SHALL CONFORM TO ASTM DESIGNATION A-82, AND SHALL BE LAPPED AT LEAST 6" WITH AT LEAST ONE CROSS WIRE WITHIN THE LAP.
7. GROUT FOR HOLLOW MASONRY UNITS SHALL BE BY PROPORTION IN ACCORDANCE WITH ASTM C476, AND SHALL BE NORMAL WEIGHT PEA GRAVEL CONCRETE.
8. LOW LIFT CONSTRUCTION, MAXIMUM GROUT POUR HEIGHT IS 4 FT.
9. ALL CMU WALL SHALL BE FULLY GROUTED.
10. SPLICE WALL VERTICAL REINFORCEMENT 48 BAR DIAMETERS (2'-6" MIN).
11. ALL EXTERIOR 12" CMU WALLS THAT HAVE A LENGTH OF 8 FT OR LESS SHALL ALL HAVE #5 REBAR VERTICAL.
12. REINFORCEMENT OF CMU WALLS :
    12" CMU EXTERIOR : #5 @ 16" OC
    12" CMU INTERIOR : #5 @ 32" OC
    8" CMU INTERIOR : #5 @ 32" OC

CONCRETE MASONRY (CMU) NOTES 1
NO SCALE

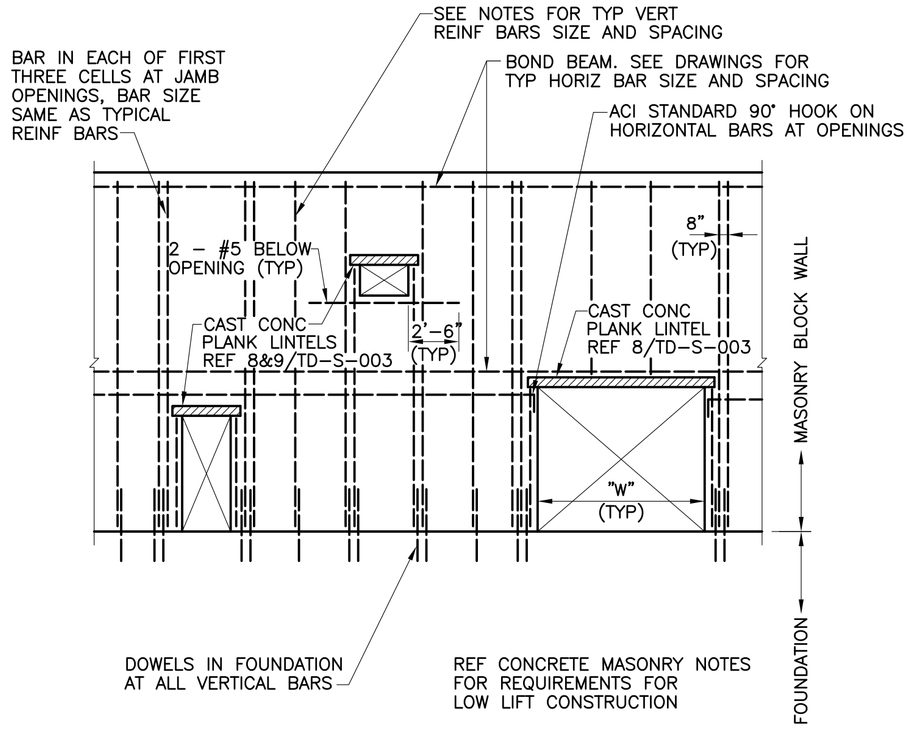

TYPICAL REINFORCING CONCRETE MASONRY (CMU) WALL ELEVATION 2
NO SCALE

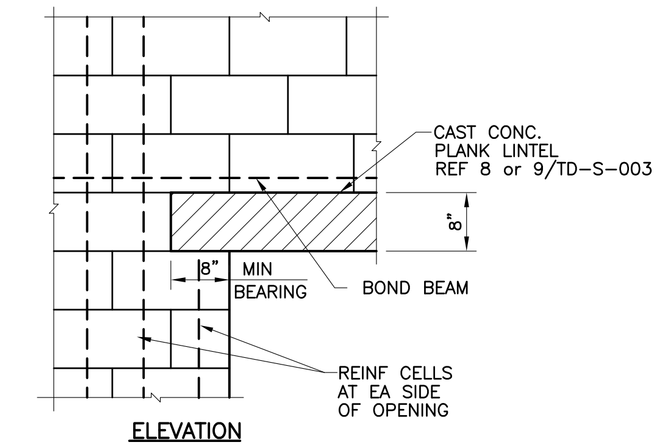

ELEVATION

CAST CONC. PLANK LINTEL AT OPENINGS 3
NO SCALE

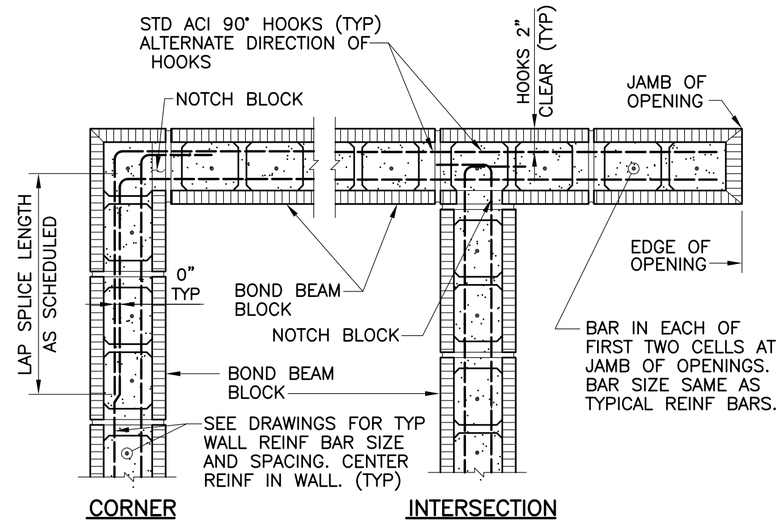

CORNER INTERSECTION

DOUBLE BAR BOND BEAM 4
NO SCALE

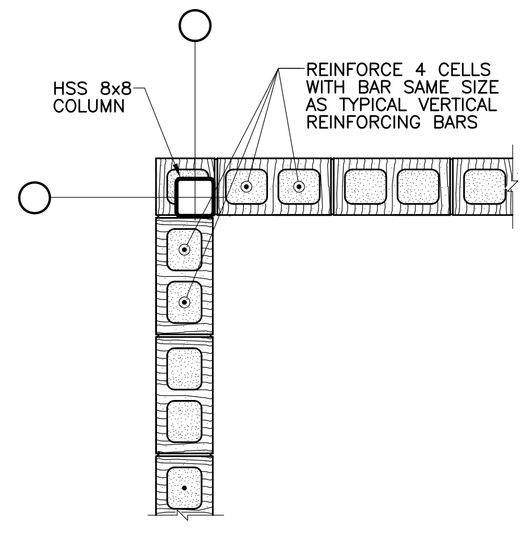

NOTE: GROUT ALL CELLS (TYPICAL)

CMU WALL CORNER DETAIL 5
NO SCALE

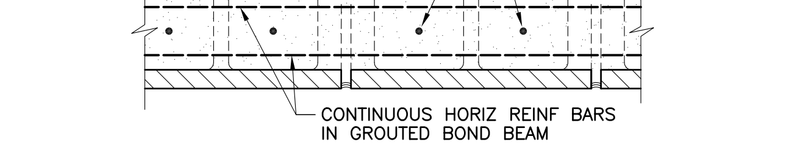

SECTION AT BOND BEAM
W/ SINGLE WALL REINF MAT

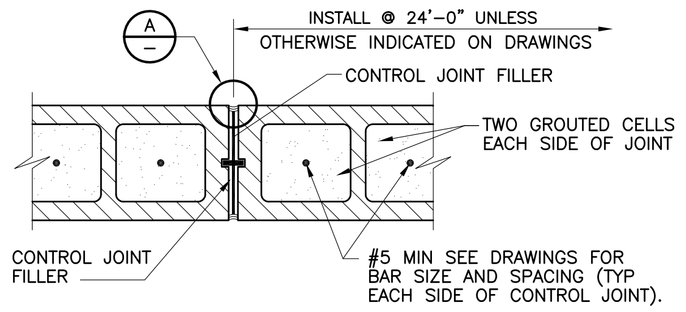

SECTION ABOVE OR BELOW BOND BEAM
w/SINGLE WALL REINF MAT

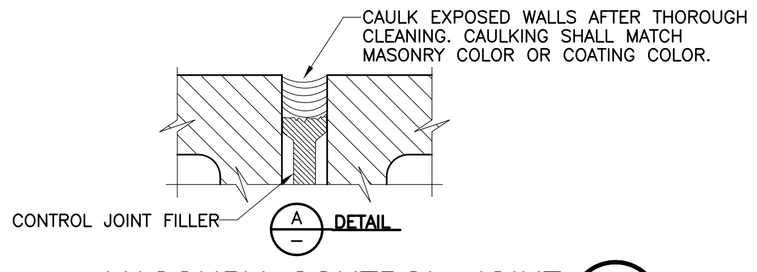

MASONRY CONTROL JOINT 6
NO SCALE

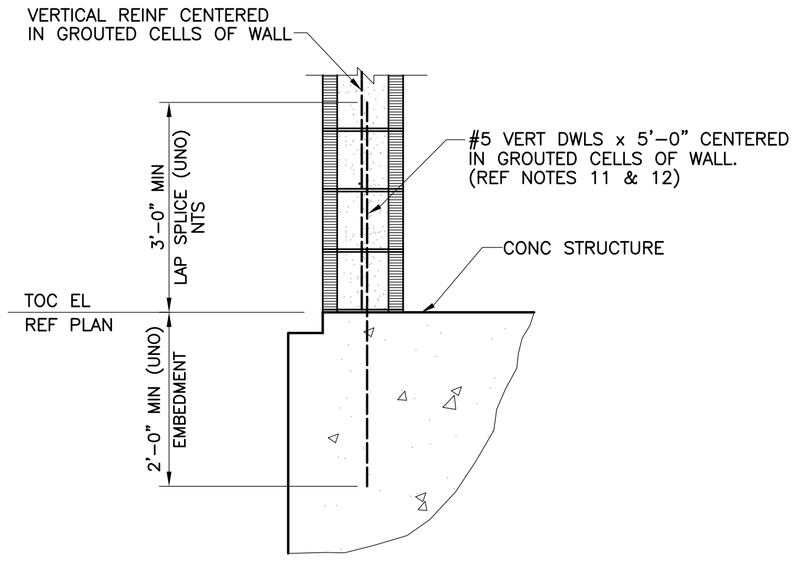

DOWELS AT BASE OF TYPICAL STRUCTURAL CMU BACK-UP OR BRACING WALLS 7
NO SCALE

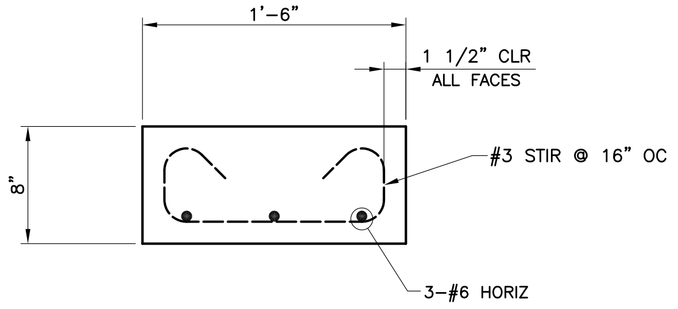

CAST CONCRETE PLANK LINTEL SECTION FOR ROLL-UP DOORS 8
1 1/2" = 1'-0"

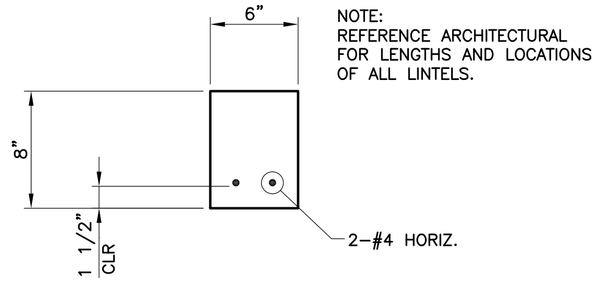

CAST CONCRETE PLANK LINTEL SECTION FOR ENTRY DOORS 9
1 1/2" = 1'-0"

BAR LENGTH ON ORIGINAL DRAWING EQUALS ONE INCH, ADJUST SCALE ACCORDINGLY.

Jose I. Guerra, Inc.
Consulting Engineers
2401 South IH-35 Suite 210
Austin, Texas 78741
(512) 445-2090
Structural ◆ Civil ◆ Mechanical ◆ Electrical
TBPE FIRM F-3

STATE OF TEXAS · KENNETH W. HANKS · 97528 · LICENSED · PROFESSIONAL ENGINEER · 9/18/19

NO.	DATE:	DESCRIPTION

HARUTUNIAN ENGINEERING INCORPORATED
TEXAS FIRM REGISTRATION NUMBER F-2408
ENGINEERING AND ENVIRONMENTAL CONSULTANTS
8100 CROSS PARK DRIVE
AUSTIN, TEXAS 78754

REUSE OF DOCUMENTS
This document, and the designs incorporated herein, is an instrument of professional service that has been developed, designed and prepared by Harutunian Engineering, Inc., and is not to be used, in whole or in part, for any other project without giving written notice to Harutunian Engineering, Inc.

DESIGNED BY:	KH
CHECKED BY:	YC
APPROVED BY:	YC
SUBMITTAL DATE:	OCTOBER 2019
SCALE:	AS SHOWN

SOUTH AUSTIN REGIONAL WASTEWATER TREATMENT PLANT
ELECTRICAL SUBSTATION NO. 1 REPLACEMENT PROJECT
CIP I.D.# 3333.032

STRUCTURAL TYPICAL DETAILS
SHEET 3 OF 4

PROJECT NO: 2014-300 | SHT. 792 OF 866 | DWG NO. TD-S-003

CADFILE:F:\16051_SAR WWTP Elec Substation No 1\DRAWINGS\CAD\TD-S-003.dwg Plotted: Sep 26, 19 @ 10:38 am by: rhinojosa Scale: 1:16

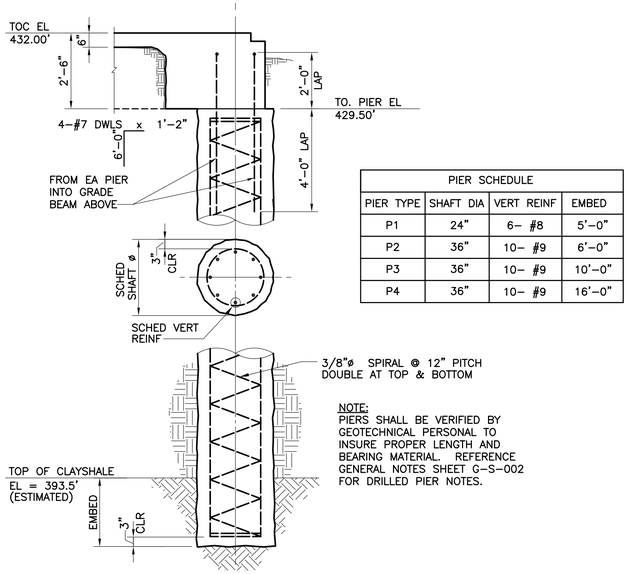

PIER SCHEDULE			
PIER TYPE	SHAFT DIA	VERT REINF	EMBED
P1	24"	6- #8	5'-0"
P2	36"	10- #9	6'-0"
P3	36"	10- #9	10'-0"
P4	36"	10- #9	16'-0"

NOTE:
PIERS SHALL BE VERIFIED BY GEOTECHNICAL PERSONAL TO INSURE PROPER LENGTH AND BEARING MATERIAL. REFERENCE GENERAL NOTES SHEET G-S-002 FOR DRILLED PIER NOTES.

TYPICAL DRILLED PIER SCHEDULE & DETAIL (1)
NO SCALE

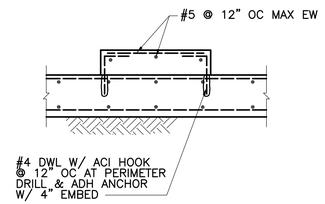

NOTE :
DIMENSIONS OF PAD AS REQD TO SUIT EQUIP (6" MIN HEIGHT UNLESS PAD IS CAST INTEGRALLY WITH SLAB)

EQUIPMENT / TANK PAD DETAIL (2)
NO SCALE

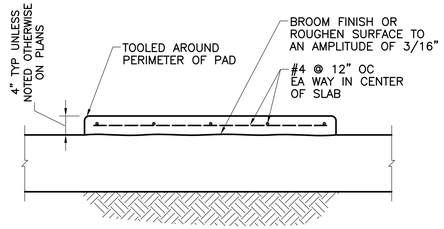

REFER TO MECH, ELEC, HVAC DRAWINGS FOR LOCATION OF CONC PADS AND DIMENSIONS OF PAD AS REQUIRED TO SUIT EQUIPMENT

TYPICAL HOUSEKEEPING PAD DETAIL (3)
NO SCALE

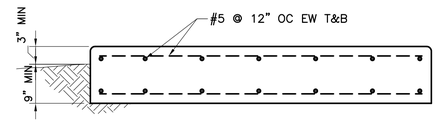

REFER TO HVAC/ MECH/ ELEC DRAWINGS FOR LOCATION OF PADS. DIMENSIONS OF PAD AS REQUIRED TO SUIT EQUIPMENT

USE #6 @ 12" OC FOR FOUNDATION PAD > 14"

TYPICAL HVAC UNIT, ELECTRICAL & MECH FOUNDATION PAD DETAIL (4)
NO SCALE

CADFILE:F:\16051_SAR WWTP Elec Substation No 1\DRAWINGS\CAD\TD-S-004.dwg Plotted: Sep 26, 19 @ 10:39 am by: rhinojosa Scale: 1:16

BAR LENGTH ON ORIGINAL DRAWING EQUALS ONE INCH, ADJUST SCALE ACCORDINGLY.

Jose I. Guerra, Inc.
Consulting Engineers
2401 South IH-35 Suite 210
Austin, Texas 78741
(512) 445-2090
Structural ◆ Civil ◆ Mechanical ◆ Electrical
TBPE FIRM F-3

STATE OF TEXAS
KENNETH W. HANKS
97528
LICENSED
PROFESSIONAL ENGINEER
4/18/19

NO.	DATE:	DESCRIPTION

HARUTUNIAN ENGINEERING INCORPORATED
TEXAS FIRM REGISTRATION NUMBER F-2408
ENGINEERING AND ENVIRONMENTAL CONSULTANTS
8100 CROSS PARK DRIVE
AUSTIN, TEXAS 78754

REUSE OF DOCUMENTS
This document, and the designs incorporated herein, is an instrument of professional service that has been developed, designed and prepared by Harutunian Engineering, Inc., and is not to be used, in whole or in part, for any other project without giving written notice to Harutunian Engineering, Inc.

DESIGNED BY:	KH
CHECKED BY:	YC
APPROVED BY:	YC
SUBMITTAL DATE:	OCTOBER 2019
SCALE:	AS SHOWN

SOUTH AUSTIN REGIONAL WASTEWATER TREATMENT PLANT
ELECTRICAL SUBSTATION NO. 1 REPLACEMENT PROJECT
CIP I.D.# 3333.032

STRUCTURAL TYPICAL DETAILS
SHEET 4 OF 4

PROJECT NO: 2014-300 | SHT. 793 OF 866 | DWG NO. TD-S-004

ELECTRICAL MANHOLE SCHEDULE (TYPE 1)

MANHOLE TAG	MANHOLE DIMENSIONS				APPROXIMATE WALL ORIENTATION (INSIDE FACE)	DUCTBANK WINDOW NAME	DUCTBANK WINDOW DIMENSIONS		DUCTBANK WINDOW LOCATIONS			
	WIDTH (W) (FEET)	HEIGHT (H) (FEET)	TOC FTG ELEV (D)	CONE NECK HEIGHT (CN H) (INCHES)			HEIGHT (DB H) (INCHES)	WIDTH (DB W) (INCHES)	VERTICAL (A) (INCHES)	VERTICAL (B) (INCHES)	HORIZ (X) (INCHES)	HORIZ (Y) (INCHES)
EMH-40A	13	12	415.34	20	North	DBP-12/40A	18	24	25.5	100.5	12	120
					East	DBP-40A/41A (1)	42	24	73.5	28.5	12	120
						DBP-40A/41A (2)	42	24	73.5	28.5	120	12
					South	N/A	N/A	N/A	N/A	N/A	N/A	N/A
					West	DBP-STUBUP/40A (1)	42	24	73.5	28.5	12	120
						DBP-STUBUP/40A (2)	42	24	73.5	28.5	120	12
EMH-40B	13	12	415.33	20	North	DBP-12/40B	18	24	25.5	100.5	12	120
					East	DBP-40B/41B (1)	42	24	73.5	28.5	12	120
						DBP-40B/41B (2)	42	24	73.5	28.5	120	12
					South	N/A	N/A	N/A	N/A	N/A	N/A	N/A
					West	DBP-STUBUP/40B (1)	42	24	73.5	28.5	12	120
						DBP-STUBUP/40B (2)	42	24	73.5	28.5	120	12
EMH-41A	13	12	416.00	20	North	N/A	N/A	N/A	N/A	N/A	N/A	N/A
					East	DBP-41A/42A (1)	42	24	71.5	30.5	12	120
						DBP-41A/42A (2)	42	24	71.5	30.5	120	12
					South	N/A	N/A	N/A	N/A	N/A	N/A	N/A
					West	DBP-40A/41A (1)	42	24	71.5	30.5	12	120
						DBP-40A/41A (2)	42	24	71.5	30.5	120	12
EMH-41B	13	12	415.30	20	North	N/A	N/A	N/A	N/A	N/A	N/A	N/A
					East	DBP-41B/42B (1)	42	24	79	23	12	120
						DBP-41B/42B (2)	42	24	79	23	120	12
					South	N/A	N/A	N/A	N/A	N/A	N/A	N/A
					West	DBP-40B/41B (1)	42	24	79	23	12	120
						DBP-40B/41B (2)	42	24	79	23	120	12
EMH-43A	13	12	413.93	20	North	DBP-43A/44A (1)	48	32	78	18	12	112
						DBP-43A/44A (2)	48	32	78	18	112	12
					East	DBP-43A/LS1A	24	24	96	24	120	12
					South	DBP-42A/43A (1)	48	32	78	18	12	112
						DBP-42A/43A (2)	48	32	78	18	112	12
					West	N/A	N/A	N/A	N/A	N/A	N/A	N/A
EMH-43B	13	12	413.04	20	North	DBP-43B/44B (1)	48	32	85	11	12	112
						DBP-43B/44B (2)	48	32	85	11	112	12
					East	DBP-43B/LS1B	24	24	36	84	12	120
					South	DBP-42B/43B (1)	48	32	85	11	12	112
						DBP-42B/43B (2)	48	32	85	11	112	12
					West	N/A	N/A	N/A	N/A	N/A	N/A	N/A
EMH-44A	13	12	414.07	20	North	DBP-44A/45A (1)	48	32	73	23	12	112
						DBP-44A/45A (2)	48	32	73	23	112	12
					East	N/A	N/A	N/A	N/A	N/A	N/A	N/A
					South	DBP-43A/44A (1)	48	32	73	23	12	112
						DBP-43A/44A (2)	48	32	73	23	112	12
					West	N/A	N/A	N/A	N/A	N/A	N/A	N/A
EMH-44B	13	12	413.32	20	North	DBP-44B/45B (1)	48	32	82	14	12	112
						DBP-44B/45B (2)	48	32	82	14	112	12
					East	N/A	N/A	N/A	N/A	N/A	N/A	N/A
					South	DBP-43B/44B (1)	48	32	82	14	12	112
						DBP-43B/44B (2)	48	32	82	14	112	12
					West	N/A	N/A	N/A	N/A	N/A	N/A	N/A
EMH-46A	13	12	413.76	22	North	DBP-46A/16A (1)	48	32	24	72	12	112
						DBP-46A/16A (2)	48	32	24	72	112	12
					East	N/A	N/A	N/A	N/A	N/A	N/A	N/A
					South	DBP-45A/46A (1)	48	32	24	72	12	112
						DBP-45A/46A (2)	48	32	24	72	112	12
					West	N/A	N/A	N/A	N/A	N/A	N/A	N/A

NOTES:

1. THE CARDINAL DIRECTION REFERENCES INDICATED IN THE SCHEDULE FOR INSIDE FACE ELECTRICAL MANHOLE WALLS ARE APPROXIMATE AND ARE BASED ON THE PLANT DIRECTIONAL SYSTEM. REFER TO CIVIL DRAWINGS FOR ADDITIONAL INFO ABOUT LOCATIONS AND ORIENTATIONS.
2. THE NOTED FORMED DUCT BANK WINDOW IS THE WINDOW FOR ELECTRICAL DUCT BANKS TO ENTER THE ELECTRICAL MANHOLES, REFER TO DETAIL 7/TD-S-011 FOR TYPICAL DUCT BANK ENTRANCE WINDOW CONSTRUCTION INFORMATION.
3. PROVIDE ADDITIONAL WALL REINFORCING AT DUCT BANK ENTRANCE WINDOW PER TYPICAL DETAIL 2 ON THIS SHEET.
4. REFER TO DETAILS ON SHEET TD-S-010 FOR TYPICAL ELECTRICAL MANHOLE CONSTRUCTION REQUIREMENTS, WHICH CORRELATE WITH THE SCHEDULE ON THIS SHEET.
5. THE TOP OF MANHOLE COVER ELEVATION SHALL BE ABOVE GRADE PER DETAIL 4/TD-S-011. EXISTING GRADE ELEVATIONS AND CONE NECK HEIGHTS SCHEDULED ARE FOR BIDDING PURPOSES AND SHALL BE FIELD VERIFIED BY CONTRACTOR PRIOR TO MANHOLE INSTALLATION. REFER TO CIVIL DRAWINGS FOR GRADE ELEVATIONS.

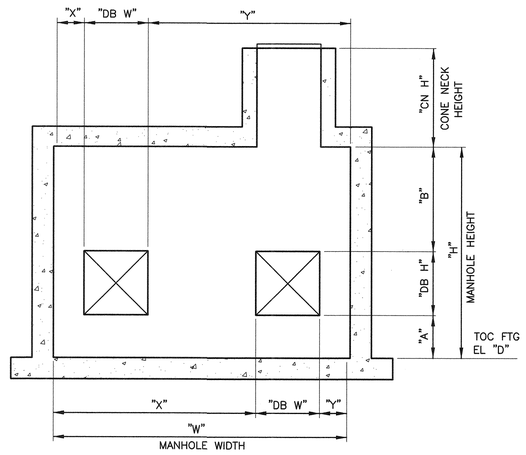

DOUBLE WINDOW

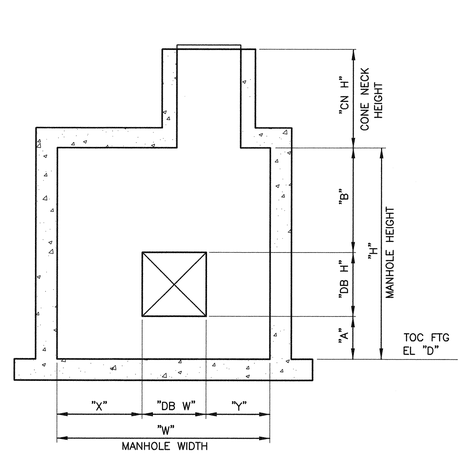

SINGLE WINDOW

ELECTRICAL MANHOLE WALL ELEVATION VIEW FROM INSIDE — 1/–

N.T.S.

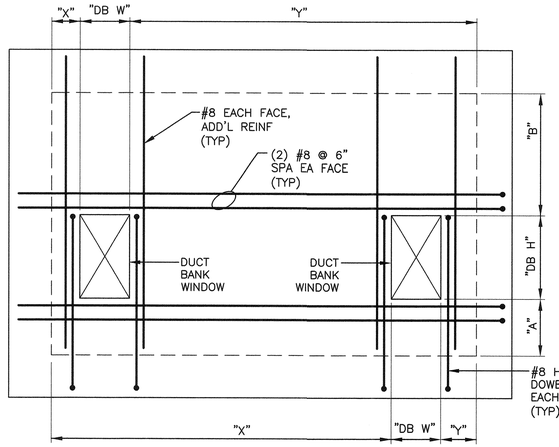

DOUBLE WINDOW

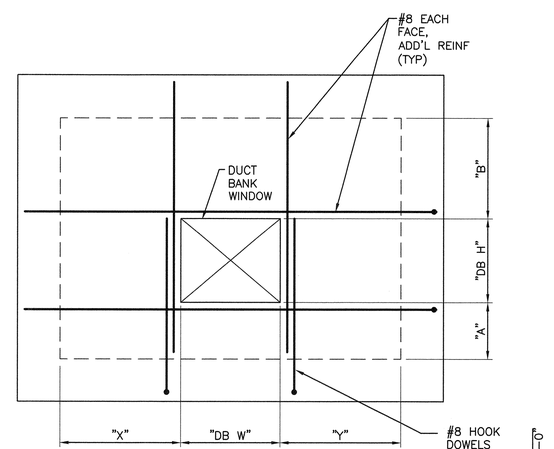

SINGLE WINDOW

ADDITIONAL WINDOW REINFORCING (TYPE 1) — 2/–

SCALE: NTS

BAR LENGTH ON ORIGINAL DRAWING EQUALS ONE INCH, ADJUST SCALE ACCORDINGLY.

AECOM TECHNICAL SERVICES INC.
9400 AMBERGLEN BOULEVARD
AUSTIN, TEXAS 78729
WWW.AECOM.COM
TBPE REG. NO. F-3580

STATE OF TEXAS — TAREK M. REFAI — 110484 — LICENSED PROFESSIONAL ENGINEER — 9/23/19

NO.	DATE:	DESCRIPTION

HARUTUNIAN ENGINEERING INCORPORATED
TEXAS FIRM REGISTRATION NUMBER F-2408
ENGINEERING AND ENVIRONMENTAL CONSULTANTS
8100 CROSS PARK DRIVE
AUSTIN, TEXAS 78754

REUSE OF DOCUMENTS

This document, and the designs incorporated herein, is an instrument of professional service that has been developed, designed and prepared by Harutunian Engineering, Inc., and is not to be used, in whole or in part, for any other project without giving written notice to Harutunian Engineering, Inc.

DESIGNED BY:	TR
CHECKED BY:	CW
APPROVED BY:	SGE
SUBMITTAL DATE:	OCTOBER 2019
SCALE:	AS NOTED

SOUTH AUSTIN REGIONAL WASTEWATER TREATMENT PLANT
ELECTRICAL SUBSTATION NO. 1 REPLACEMENT PROJECT
CIP I.D.# 3333.032

ELECTRICAL MANHOLE SCHEDULE AND WALL ELEVATION (TYPE 1)

PROJECT NO: 2014-300 | SHT. 794 OF 866 | DWG NO. TD-S-005

E:\605266\7 SARWWTP ELEC SUB NO. 1\900-WORKINGDOCS-CAD\910 CADD\20-SHEETS\TD-S-005.DWG BY: GADHIAT DATE: 9/23/2019 10:25 AM

ELECTRICAL MANHOLE SCHEDULE (TYPE 2)

MANHOLE TAG	MANHOLE DIMENSIONS WIDTH (W) (FEET)	HEIGHT (H) (FEET)	TOC FTG ELEV (D)	CONE NECK HEIGHT (CN H) (INCHES)	APPROXIMATE WALL ORIENTATION (INSIDE FACE)	DUCTBANK WINDOW NAME	DUCTBANK WINDOW DIMENSIONS HEIGHT (DB H) (INCHES)	WIDTH (DB W) (INCHES)	DUCTBANK WINDOW LOCATIONS VERTICAL (A) (INCHES)	VERTICAL (B) (INCHES)	HORIZ (X) (INCHES)	HORIZ (Y) (INCHES)
EMH-50A	12	10	415.83	20	North	N/A	N/A	N/A	N/A	N/A	N/A	N/A
					East	DBP-50A/51A (1)	36	24	24	60	12	108
						DBP-50A/51A (2)	36	24	24	60	108	12
					South	N/A	N/A	N/A	N/A	N/A	N/A	N/A
					West	DBP-SUB1A/50A (1)	36	24	24	60	12	108
						DBP-SUB1A/50A (2)	36	24	24	60	108	12
EMH-50B	12	10	415.83	20	North	N/A	N/A	N/A	N/A	N/A	N/A	N/A
					East	DBP-50B/51B (1)	36	24	24	60	12	108
						DBP-50B/51B (2)	36	24	24	60	108	12
					South	N/A	N/A	N/A	N/A	N/A	N/A	N/A
					West	DBP-SUB1B/50B (1)	36	24	24	60	12	108
						DBP-SUB1B/50B (2)	36	24	24	60	108	12
EMH-51A	12	10	414.83	20	North	N/A	N/A	N/A	N/A	N/A	N/A	N/A
					East	DBP-51A/52A (1)	36	24	24	60	12	108
						DBP-51A/52A (2)	36	24	24	60	108	12
					South	N/A	N/A	N/A	N/A	N/A	N/A	N/A
					West	DBP-50A/51A (1)	36	24	24	60	12	108
						DBP-50A/51A (2)	36	24	24	60	108	12
EMH-51B	12	10	414.83	20	North	N/A	N/A	N/A	N/A	N/A	N/A	N/A
					East	DBP-51B/52B (1)	36	24	24	60	12	108
						DBP-51B/52B (2)	36	24	24	60	108	12
					South	N/A	N/A	N/A	N/A	N/A	N/A	N/A
					West	DBP-50B/51B (1)	36	24	24	60	12	108
						DBP-50B/51B (2)	36	24	24	60	108	12
EMH-52A	12	10	413.33	20	North	N/A	N/A	N/A	N/A	N/A	N/A	N/A
					East	DBP-52A/53A (1)	36	24	24	60	12	108
						DBP-52A/52A (2)	36	24	24	60	108	12
					South	N/A	N/A	N/A	N/A	N/A	N/A	N/A
					West	DBP-51A/52A (1)	36	24	24	60	12	108
						DBP-51A/52A (2)	36	24	24	60	108	12
EMH-52B	12	10	413.33	20	North	N/A	N/A	N/A	N/A	N/A	N/A	N/A
					East	DBP-52B/53B (1)	36	24	24	60	12	108
						DBP-52B/53B (2)	36	24	24	60	108	12
					South	N/A	N/A	N/A	N/A	N/A	N/A	N/A
					West	DBP-51B/52B (1)	36	24	24	60	12	108
						DBP-51B/52B (2)	36	24	24	60	108	12
EMH-53A	12	10	412.33	20	North	N/A	N/A	N/A	N/A	N/A	N/A	N/A
					East	DBP-53A/SUB2-1 (1)	36	24	24	60	12	108
						DBP-53A/SUB2-1 (2)	36	24	24	60	108	12
					South	N/A	N/A	N/A	N/A	N/A	N/A	N/A
					West	DBP-52A/53A (1)	36	24	24	60	12	108
						DBP-52A/52A (2)	36	24	24	60	108	12
EMH-53B	12	10	412.33	20	North	N/A	N/A	N/A	N/A	N/A	N/A	N/A
					East	DBP-53B/SUB2-1 (1)	36	24	24	60	12	108
						DBP-53B/SUB2-1 (2)	36	24	24	60	108	12
					South	N/A	N/A	N/A	N/A	N/A	N/A	N/A
					West	DBP-52B/53B (1)	36	24	24	60	12	108
						DBP-52B/53B (2)	36	24	24	60	108	12
EMH-AE100	12	10	417.33	20	North	N/A	N/A	N/A	N/A	N/A	N/A	N/A
					East	DBP-SUB1A/AE100	24	30	24	72	102	12
					South	N/A	N/A	N/A	N/A	N/A	N/A	N/A
					West	N/A	N/A	N/A	N/A	N/A	N/A	N/A
EMH-AE200	12	10	417.33	20	North	N/A	N/A	N/A	N/A	N/A	N/A	N/A
					East	DBP-SUB1A/AE200	24	30	24	72	102	12
					South	N/A	N/A	N/A	N/A	N/A	N/A	N/A
					West	N/A	N/A	N/A	N/A	N/A	N/A	N/A

NOTES:

1. THE CARDINAL DIRECTION REFERENCES INDICATED IN THE SCHEDULE FOR INSIDE FACE ELECTRICAL MANHOLE WALLS ARE APPROXIMATE AND ARE BASED ON THE PLANT DIRECTIONAL SYSTEM. REFER TO CIVIL DRAWINGS FOR ADDITIONAL INFO ABOUT LOCATIONS AND ORIENTATIONS.
2. THE NOTED FORMED DUCT BANK WINDOW IS THE WINDOW FOR ELECTRICAL DUCT BANKS TO ENTER THE ELECTRICAL MANHOLES, REFER TO DETAIL 7/TD-S-011 FOR TYPICAL DUCT BANK ENTRANCE WINDOW CONSTRUCTION INFORMATION.
3. PROVIDE ADDITIONAL WALL REINFORCING AT DUCT BANK ENTRANCE WINDOW PER TYPICAL DETAIL 2 ON THIS SHEET.
4. REFER TO DETAILS ON SHEET TD-S-010 FOR TYPICAL ELECTRICAL MANHOLE CONSTRUCTION REQUIREMENTS, WHICH CORRELATE WITH THE SCHEDULE ON THIS SHEET.
5. THE TOP OF MANHOLE COVER ELEVATION SHALL BE ABOVE GRADE PER DETAIL 4/TD-S-011. EXISTING GRADE ELEVATIONS AND CONE NECK HEIGHTS SCHEDULED ARE FOR BIDDING PURPOSES AND SHALL BE FIELD VERIFIED BY CONTRACTOR PRIOR TO MANHOLE INSTALLATION. REFER TO CIVIL DRAWINGS FOR GRADE ELEVATIONS.

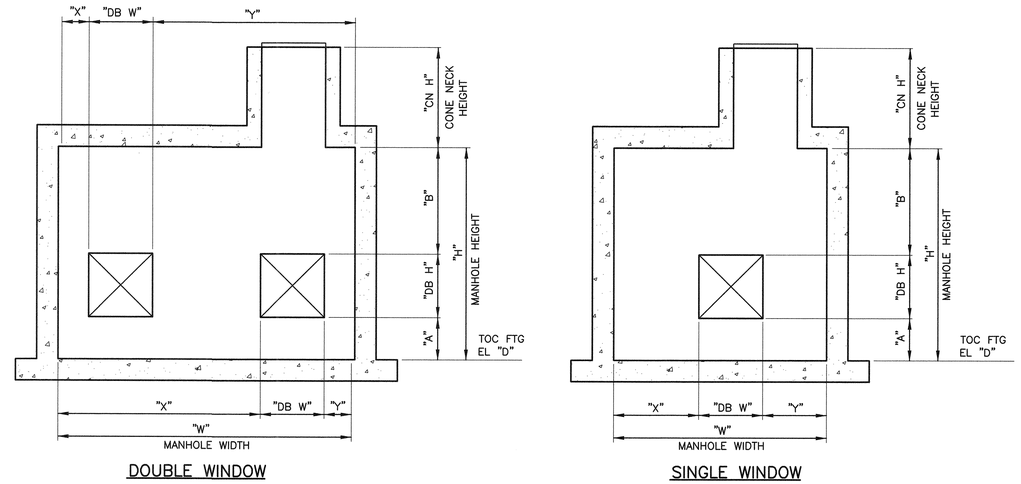

DOUBLE WINDOW SINGLE WINDOW

ELECTRICAL MANHOLE WALL ELEVATION VIEW FROM INSIDE (1)

N.T.S.

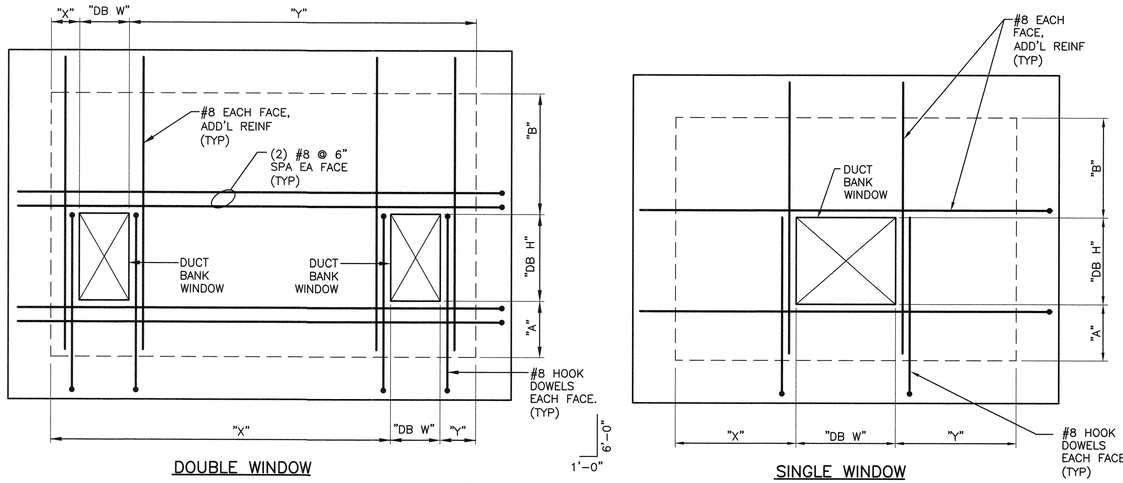

DOUBLE WINDOW SINGLE WINDOW

ADDITIONAL WINDOW REINFORCING (TYPE 2) (2)

SCALE: NTS

BAR LENGTH ON ORIGINAL DRAWING EQUALS ONE INCH, ADJUST SCALE ACCORDINGLY.

AECOM TECHNICAL SERVICES INC.
9400 AMBERGLEN BOULEVARD
AUSTIN, TEXAS 78729
WWW.AECOM.COM
TBPE REG. NO. F-3580

STATE OF TEXAS — TAREK M. REFAI — 110484 — LICENSED PROFESSIONAL ENGINEER — 9/23/19

NO.	DATE:	DESCRIPTION

HARUTUNIAN ENGINEERING INCORPORATED
TEXAS FIRM REGISTRATION NUMBER F-2408
ENGINEERING AND ENVIRONMENTAL CONSULTANTS
8100 CROSS PARK DRIVE
AUSTIN, TEXAS 78754

REUSE OF DOCUMENTS

This document, and the designs incorporated herein, is an instrument of professional service that has been developed, designed and prepared by Harutunian Engineering, Inc., and is not to be used, in whole or in part, for any other project without giving written notice to Harutunian Engineering, Inc.

DESIGNED BY:	TR
CHECKED BY:	CW
APPROVED BY:	SGE
SUBMITTAL DATE:	OCTOBER 2019
SCALE:	AS NOTED

SOUTH AUSTIN REGIONAL WASTEWATER TREATMENT PLANT
ELECTRICAL SUBSTATION NO. 1 REPLACEMENT PROJECT
CIP I.D.# 3333.032

ELECTRICAL MANHOLE SCHEDULE AND WALL ELEVATION (TYPE 2)

PROJECT NO: 2014-300 | SHT. 795 OF 866 | DWG NO. TD-S-006

E:\605286\7 SARWWTP ELEC SUB NO. 1\900-WORKINGDOCS-CAD\910 CADD\20\SHEETS\TD-S-006.DWG BY: GADHIAT DATE: 9/23/2019 10:25 AM

ELECTRICAL MANHOLE SCHEDULE (TYPE 3)

MANHOLE TAG	MANHOLE DIMENSIONS				APPROXIMATE WALL ORIENTATION (INSIDE FACE)	DUCTBANK WINDOW NAME	DUCTBANK WINDOW DIMENSIONS		DUCTBANK WINDOW LOCATIONS			
	WIDTH (W) (FEET)	HEIGHT (H) (FEET)	TOC FTG ELEV (D)	CONE NECK HEIGHT (CN H) (INCHES)			HEIGHT (DB H) (INCHES)	WIDTH (DB W) (INCHES)	VERTICAL (A) (INCHES)	VERTICAL (B) (INCHES)	HORIZ (X) (INCHES)	HORIZ (Y) (INCHES)
EMH-45A	13	12	408.97	84	North	DBP-45A/46A (1)	48	32	24	72	12	112
						DBP-45A/46A (2)	48	32	24	72	112	12
					East	N/A	N/A	N/A	N/A	N/A	N/A	N/A
					South	DBP-44A/45A (1)	48	32	24	72	12	112
						DBP-44A/45A (2)	48	32	24	72	112	12
					West	N/A	N/A	N/A	N/A	N/A	N/A	N/A
EMH-45B	13	12	408.97	86	North	DBP-45B/46B (1)	48	32	24	72	12	112
						DBP-45B/46B (2)	48	32	24	72	112	12
					East	N/A	N/A	N/A	N/A	N/A	N/A	N/A
					South	DBP-44B/45B (1)	48	32	24	72	12	112
						DBP-44B/45B (2)	48	32	24	72	112	12
					West	N/A	N/A	N/A	N/A	N/A	N/A	N/A
EMH-46B	13	12	409.93	70	North	DBP-46B/16B (1)	48	32	24	72	12	112
						DBP-46B/16B (2)	48	32	24	72	112	12
					East	N/A	N/A	N/A	N/A	N/A	N/A	N/A
					South	DBP-45B/46B (1)	48	32	24	72	12	112
						DBP-45B/46B (2)	48	32	24	72	112	12
					West	N/A	N/A	N/A	N/A	N/A	N/A	N/A

NOTES:

1. THE CARDINAL DIRECTION REFERENCES INDICATED IN THE SCHEDULE FOR INSIDE FACE ELECTRICAL MANHOLE WALLS ARE APPROXIMATE AND ARE BASED ON THE PLANT DIRECTIONAL SYSTEM. REFER TO CIVIL DRAWINGS FOR ADDITIONAL INFO ABOUT LOCATIONS AND ORIENTATIONS.
2. THE NOTED FORMED DUCT BANK WINDOW IS THE WINDOW FOR ELECTRICAL DUCT BANKS TO ENTER THE ELECTRICAL MANHOLES, REFER TO DETAIL 7/TD-S-011 FOR TYPICAL DUCT BANK ENTRANCE WINDOW CONSTRUCTION INFORMATION.
3. PROVIDE ADDITIONAL WALL REINFORCING AT DUCT BANK ENTRANCE WINDOW PER TYPICAL DETAIL 2 ON THIS SHEET.
4. REFER TO DETAILS ON SHEET TD-S-010 FOR TYPICAL ELECTRICAL MANHOLE CONSTRUCTION REQUIREMENTS, WHICH CORRELATE WITH THE SCHEDULE ON THIS SHEET.
5. THE TOP OF MANHOLE COVER ELEVATION SHALL BE ABOVE GRADE PER DETAIL 4/TD-S-011. EXISTING GRADE ELEVATIONS AND CONE NECK HEIGHTS SCHEDULED ARE FOR BIDDING PURPOSES AND SHALL BE FIELD VERIFIED BY CONTRACTOR PRIOR TO MANHOLE INSTALLATION. REFER TO CIVIL DRAWINGS FOR GRADE ELEVATIONS.

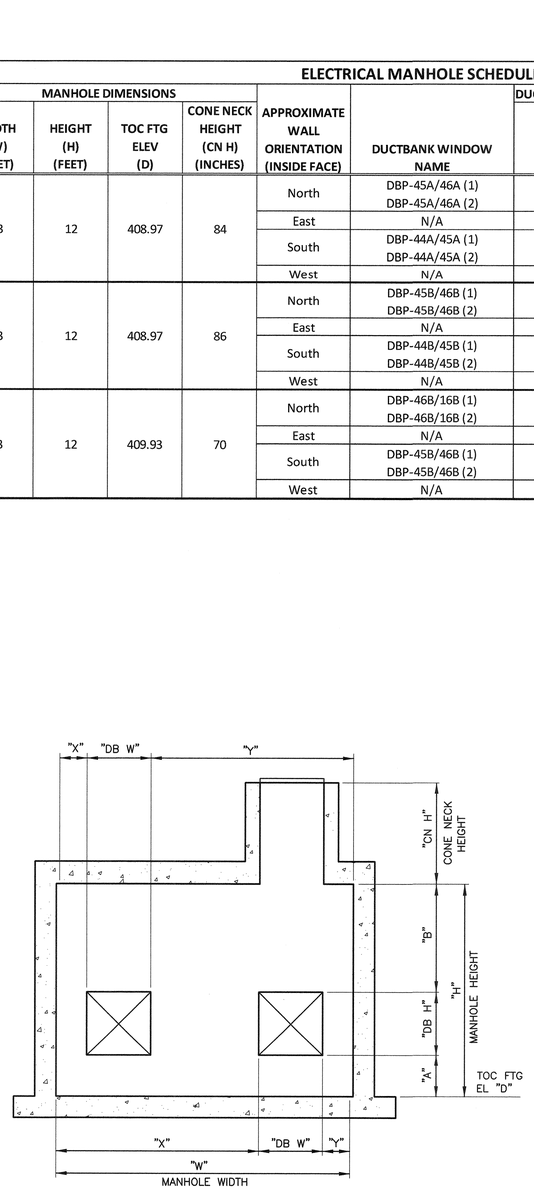

ELECTRICAL MANHOLE WALL ELEVATION VIEW FROM INSIDE

N.T.S.

1

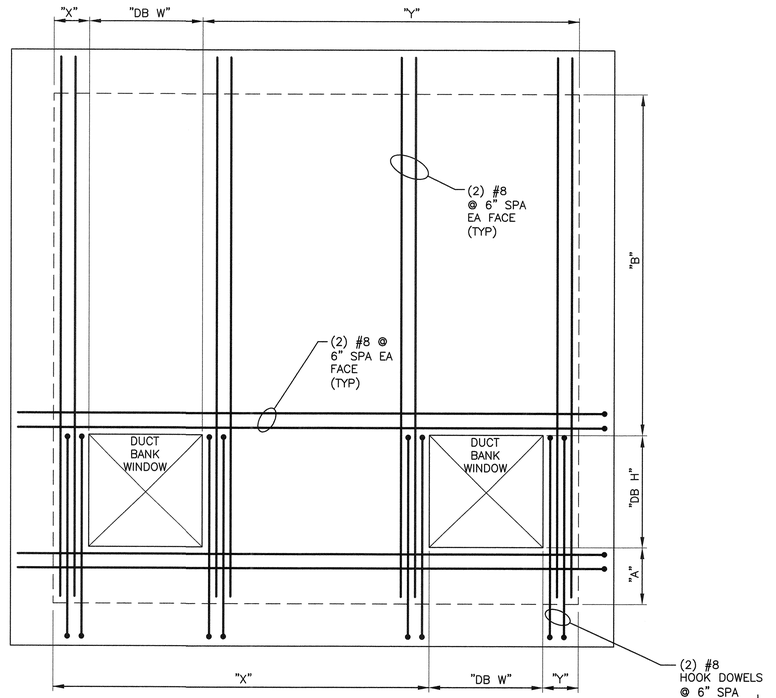

ADDITIONAL WINDOW REINFORCING (TYPE 3)

SCALE: NTS

2

E:\60026617 SARWWTP ELEC SUB NO. 1\900-WORKINGDOCS-CAD\910 CADD\20-SHEETS\TD-S-007.DWG BY: GADHIAT DATE: 9/23/2019 10:25 AM

BAR LENGTH ON ORIGINAL DRAWING EQUALS ONE INCH, ADJUST SCALE ACCORDINGLY.

AECOM
AECOM TECHNICAL SERVICES INC.
9400 AMBERGLEN BOULEVARD
AUSTIN, TEXAS 78729
WWW.AECOM.COM
TBPE REG. NO. F-3580

STATE OF TEXAS
TAREK M. REFAI
110484
LICENSED
PROFESSIONAL ENGINEER
9/23/19

NO.	DATE:	DESCRIPTION

HARUTUNIAN ENGINEERING INCORPORATED
TEXAS FIRM REGISTRATION NUMBER F-2408
ENGINEERING AND ENVIRONMENTAL CONSULTANTS
8100 CROSS PARK DRIVE
AUSTIN, TEXAS 78754

REUSE OF DOCUMENTS
This document, and the designs incorporated herein, is an instrument of professional service that has been developed, designed and prepared by Harutunian Engineering, Inc., and is not to be used, in whole or in part, for any other project without giving written notice to Harutunian Engineering, Inc.

DESIGNED BY:	TR
CHECKED BY:	CW
APPROVED BY:	SGE
SUBMITTAL DATE:	OCTOBER 2019
SCALE:	AS NOTED

SOUTH AUSTIN REGIONAL WASTEWATER TREATMENT PLANT
ELECTRICAL SUBSTATION NO. 1 REPLACEMENT PROJECT
CIP I.D.# 3333.032

ELECTRICAL MANHOLE SCHEDULE AND WALL ELEVATION (TYPE 3)

PROJECT NO: 2014-300 | SHT. 796 OF 866 | DWG NO. TD-S-007

ELECTRICAL MANHOLE SCHEDULE (TYPE 4)

MANHOLE TAG	MANHOLE DIMENSIONS				APPROXIMATE WALL ORIENTATION (INSIDE FACE)	DUCTBANK WINDOW NAME	DUCTBANK WINDOW DIMENSIONS		DUCTBANK WINDOW LOCATIONS			
	WIDTH (W) (FEET)	HEIGHT (H) (FEET)	TOC FTG ELEV (D)	CONE NECK HEIGHT (CN H) (INCHES)			HEIGHT (DB H) (INCHES)	WIDTH (DB W) (INCHES)	VERTICAL (A) (INCHES)	VERTICAL (B) (INCHES)	HORIZ (X) (INCHES)	HORIZ (Y) (INCHES)
EMH-42A	16	14.5	409.89	44	North	DBP-42A/43A&11 (1)	58	32	25.5	90.5	12	148
						DBP-42A/43A&11 (2)	58	32	25.5	90.5	148	12
					East	DBP-42A/1A	36	42	114	24	12	138
					South	DBP-SUB1A2/42A	42	42	42	90	12	138
						DBP-SUB1A1/42A	42	42	42	90	138	12
					West	DBP-41A/42A	42	42	114	18	138	12
EMH-42B	16	14.5	409.96	48	North	DBP-42B/43B&11 (1)	58	32	24	92	12	148
						DBP-42B/43B&11 (2)	58	32	24	92	148	12
					East	DBP-42B/1B	36	42	113.5	24.5	12	138
					South	DBP-SUB1B2/42B	42	42	40	92	12	138
						DBP-SUB1B1/42B	42	42	40	92	138	12
					West	DBP-41B/42B	42	42	113.5	18.5	138	12

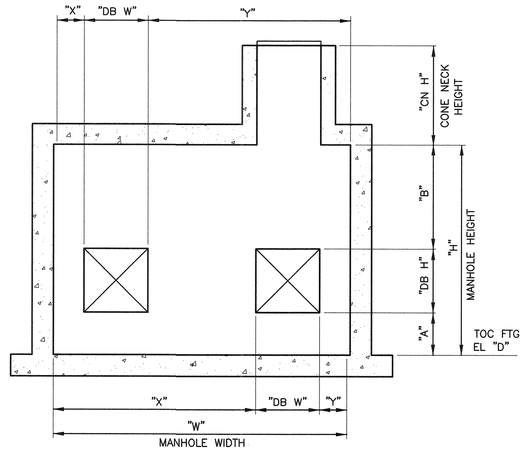

DOUBLE WINDOW

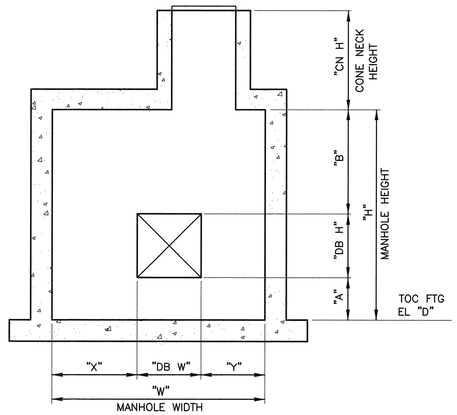

SINGLE WINDOW

ELECTRICAL MANHOLE WALL ELEVATION VIEW FROM INSIDE (1)

N.T.S.

NOTES:

1. THE CARDINAL DIRECTION REFERENCES INDICATED IN THE SCHEDULE FOR INSIDE FACE ELECTRICAL MANHOLE WALLS ARE APPROXIMATE AND ARE BASED ON THE PLANT DIRECTIONAL SYSTEM. REFER TO CIVIL DRAWINGS FOR ADDITIONAL INFO ABOUT LOCATIONS AND ORIENTATIONS.
2. THE NOTED FORMED DUCT BANK WINDOW IS THE WINDOW FOR ELECTRICAL DUCT BANKS TO ENTER THE ELECTRICAL MANHOLES, REFER TO DETAIL 7/TD-S-011 FOR TYPICAL DUCT BANK ENTRANCE WINDOW CONSTRUCTION INFORMATION.
3. PROVIDE ADDITIONAL WALL REINFORCING AT DUCT BANK ENTRANCE WINDOW PER TYPICAL DETAIL 2 ON THIS SHEET.
4. REFER TO DETAILS ON SHEET TD-S-010 FOR TYPICAL ELECTRICAL MANHOLE CONSTRUCTION REQUIREMENTS, WHICH CORRELATE WITH THE SCHEDULE ON THIS SHEET.
5. THE TOP OF MANHOLE COVER ELEVATION SHALL BE ABOVE GRADE PER DETAIL 4/TD-S-011. EXISTING GRADE ELEVATIONS AND CONE NECK HEIGHTS SCHEDULED ARE FOR BIDDING PURPOSES AND SHALL BE FIELD VERIFIED BY CONTRACTOR PRIOR TO MANHOLE INSTALLATION. REFER TO CIVIL DRAWINGS FOR GRADE ELEVATIONS.

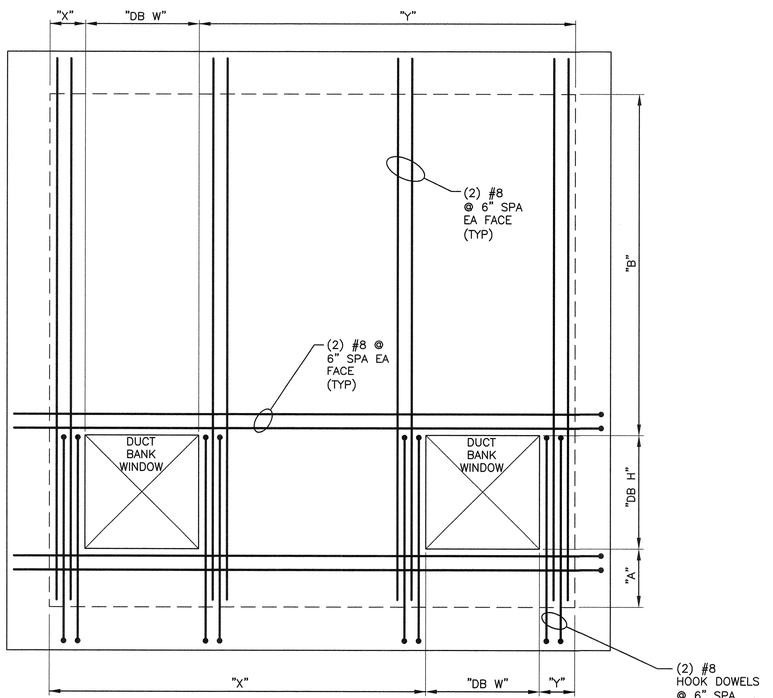

DOUBLE WINDOW

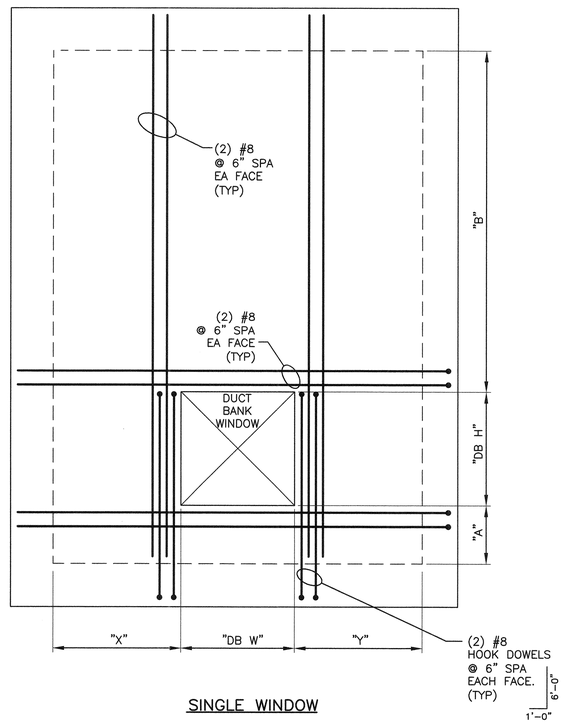

SINGLE WINDOW

ADDITIONAL WINDOW REINFORCING (TYPE 4) (2)

SCALE: NTS

E:\605626617 SARWWTP ELEC SUB NO. 1\900-WORKINGDOCS-CAD\910 CADD\20-SHEETS\TD-S-008.DWG BY: GADHIAT DATE: 9/23/2019 10:26 AM

BAR LENGTH ON ORIGINAL DRAWING EQUALS ONE INCH, ADJUST SCALE ACCORDINGLY.

AECOM
AECOM TECHNICAL SERVICES INC.
9400 AMBERGLEN BOULEVARD
AUSTIN, TEXAS 78729
WWW.AECOM.COM
TBPE REG. NO. F-3580

STATE OF TEXAS
TAREK M. REFAI
110484
LICENSED
PROFESSIONAL ENGINEER
9/23/19

NO.	DATE:	DESCRIPTION

HARUTUNIAN ENGINEERING INCORPORATED
TEXAS FIRM REGISTRATION NUMBER F-2408
ENGINEERING AND ENVIRONMENTAL CONSULTANTS
8100 CROSS PARK DRIVE
AUSTIN, TEXAS 78754

REUSE OF DOCUMENTS

This document, and the designs incorporated herein, is an instrument of professional service that has been developed, designed and prepared by Harutunian Engineering, Inc., and is not to be used, in whole or in part, for any other project without giving written notice to Harutunian Engineering, Inc.

DESIGNED BY:	TR
CHECKED BY:	CW
APPROVED BY:	SGE
SUBMITTAL DATE:	OCTOBER 2019
SCALE:	AS NOTED

SOUTH AUSTIN REGIONAL WASTEWATER TREATMENT PLANT
ELECTRICAL SUBSTATION NO. 1 REPLACEMENT PROJECT
CIP I.D.# 3333.032

ELECTRICAL MANHOLE SCHEDULE AND WALL ELEVATION (TYPE 4)

PROJECT NO: 2014-300 | SHT. 797 OF 866 | DWG NO. TD-S-008

ELECTRICAL MANHOLE SCHEDULE (TYPE 5 - EXISTING)

MANHOLE TAG	MANHOLE DIMENSIONS				APPROXIMATE WALL ORIENTATION (INSIDE FACE)	DUCTBANK WINDOW NAME	DUCTBANK WINDOW DIMENSIONS		DUCTBANK WINDOW LOCATIONS			
	WIDTH (W) (FEET)	HEIGHT (H) (FEET)	TOC FTG ELEV (D)	CONE NECK HEIGHT (CN H) (INCHES)			HEIGHT (DB H) (INCHES)	WIDTH (DB W) (INCHES)	VERTICAL (A) (INCHES)	VERTICAL (B) (INCHES)	HORIZ (X) (INCHES)	HORIZ (Y) (INCHES)
Existing MH-15	6	7	N/A	N/A	North	N/A	N/A	N/A	N/A	N/A	N/A	N/A
	8				East	Prop DBP-1/15	24	24	30.5	29.5	18	54
	6				South	Ex DBP-15	N/A	N/A	N/A	N/A	N/A	N/A
	8				West	Ex DBP-2	N/A	N/A	N/A	N/A	N/A	N/A
Existing MH-1	8	7	N/A	N/A	North	Ex DBP-1A/B	N/A	N/A	N/A	N/A	N/A	N/A
	6				East	Ex DBP-4	N/A	N/A	N/A	N/A	N/A	N/A
	8				South	Ex DBP-SSL2	N/A	N/A	N/A	N/A	N/A	N/A
	6				West	Prop DBP-1/15	24	24	22	38	30	18
Existing MH-12	6	7	N/A	N/A	North	Ex DBP-13	N/A	N/A	N/A	N/A	N/A	N/A
	8				East	Ex DBP-12	N/A	N/A	N/A	N/A	N/A	N/A
	6				South	Ex DBP-AE2	N/A	N/A	N/A	N/A	N/A	N/A
	8				West	Prop DBP-12/40AB	18	48	24.5	41.5	24	24
Existing MH-11	8	7	N/A	N/A	North	Ex DBP-LS1	N/A	N/A	N/A	N/A	N/A	N/A
	6				East	Ex DBP-11	N/A	N/A	N/A	N/A	N/A	N/A
	8				South	N/A	N/A	N/A	N/A	N/A	N/A	N/A
	6				West	Ex DBP-12	N/A	34	34	35.5	18.5	19.5
						Prop DBP-42AB/11	18	48	48.5	17.5	12	12
Existing MH-16A	12	9	N/A	N/A	North	Ex DBP-MH4/MH16A	N/A	N/A	N/A	N/A	N/A	N/A
					East	N/A	N/A	N/A	N/A	N/A	N/A	N/A
					South	Prop DBP-46A/16A	48	48	24	36	6	90
					West	Ex DBP-MH16A/XFMR1A & 2A	N/A	N/A	N/A	N/A	N/A	N/A
Existing MH-16B	12	9	N/A	N/A	North	Ex DBP-MH4/MH16B	N/A	N/A	N/A	N/A	N/A	N/A
					East	N/A	N/A	N/A	N/A	N/A	N/A	N/A
					South	Prop DBP-46B/16B	48	48	24	36	6	90
					West	Ex DBP-MH16B/XFMR1B & 2B	N/A	N/A	N/A	N/A	N/A	N/A

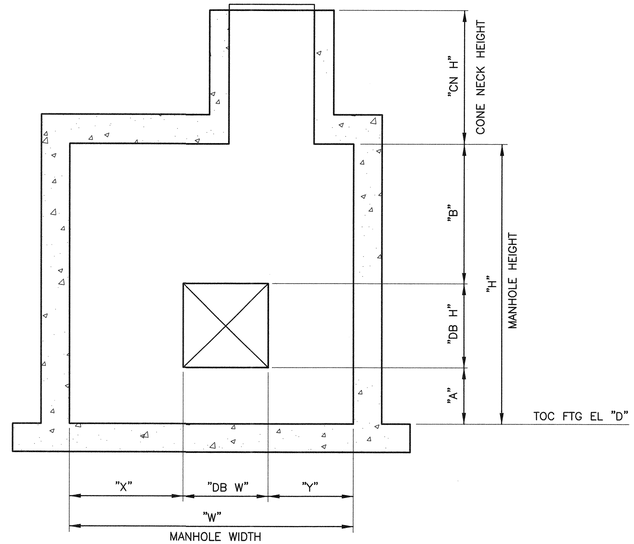

ELECTRICAL MANHOLE WALL ELEVATION VIEW FROM INSIDE 1

N.T.S.

NOTES:

1. THE CARDINAL DIRECTION REFERENCES INDICATED IN THE SCHEDULE FOR INSIDE FACE ELECTRICAL MANHOLE WALLS ARE APPROXIMATE AND ARE BASED ON THE PLANT DIRECTIONAL SYSTEM. REFER TO CIVIL DRAWINGS FOR ADDITIONAL INFO ABOUT LOCATIONS AND ORIENTATIONS.
2. THE NOTED FORMED DUCT BANK WINDOW IS THE WINDOW FOR ELECTRICAL DUCT BANKS TO ENTER THE EXISTING ELECTRICAL MANHOLES, REFER TO DETAIL 2 ON THIS SHEET FOR TYPICAL DUCT BANK ENTRANCE WINDOW CONSTRUCTION INFORMATION FOR EXISTING MANHOLES.

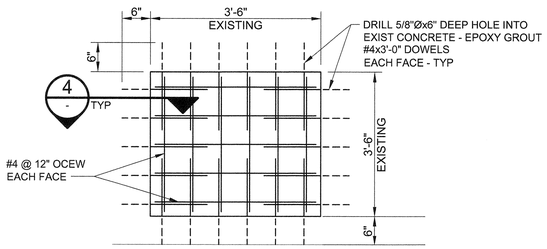

SEAL FOR EXISTING MH OPENING 3

SCALE: NTS

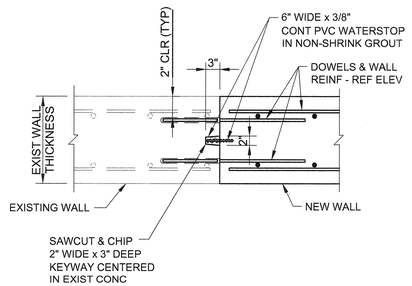

JOINT DETAIL AT EXISTING WALL & NEW INFILL 4

SCALE: NTS

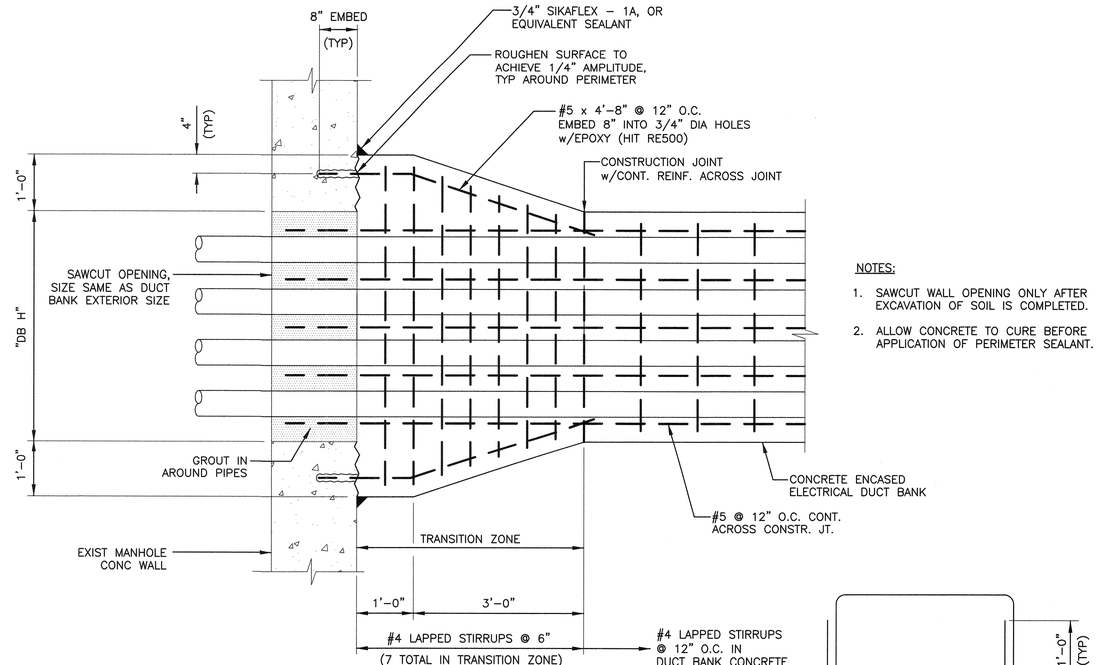

NOTES:

1. SAWCUT WALL OPENING ONLY AFTER EXCAVATION OF SOIL IS COMPLETED.
2. ALLOW CONCRETE TO CURE BEFORE APPLICATION OF PERIMETER SEALANT.

DUCT BANK CONNECTION TO EXISTING MANHOLE 2

SCALE" 3/4" = 1'-0"

E:\605266\17 SARWWTP ELEC SUB NO. 1\900-WORKING\DOCS-CAD\910 CADD\20-SHEETS\TD-S-009.DWG BY: GADHIAT DATE: 9/23/2019 11:03 AM

BAR LENGTH ON ORIGINAL DRAWING EQUALS ONE INCH, ADJUST SCALE ACCORDINGLY.

AECOM
AECOM TECHNICAL SERVICES INC.
9400 AMBERGLEN BOULEVARD
AUSTIN, TEXAS 78729
WWW.AECOM.COM
TBPE REG. NO. F-3580

STATE OF TEXAS
TAREK M. REFAI
110484
LICENSED
PROFESSIONAL ENGINEER
9/23/19

NO.	DATE:	DESCRIPTION

HARUTUNIAN ENGINEERING INCORPORATED
TEXAS FIRM REGISTRATION NUMBER F-2408
ENGINEERING AND ENVIRONMENTAL CONSULTANTS
8100 CROSS PARK DRIVE
AUSTIN, TEXAS 78754

REUSE OF DOCUMENTS
This document, and the designs incorporated herein, is an instrument of professional service that has been developed, designed and prepared by Harutunian Engineering, Inc., and is not to be used, in whole or in part, for any other project without giving written notice to Harutunian Engineering, Inc.

DESIGNED BY:	TR
CHECKED BY:	CW
APPROVED BY:	SGE
SUBMITTAL DATE:	OCTOBER 2019
SCALE:	AS NOTED

SOUTH AUSTIN REGIONAL WASTEWATER TREATMENT PLANT
ELECTRICAL SUBSTATION NO. 1 REPLACEMENT PROJECT
CIP I.D.# 3333.032

ELECTRICAL MANHOLE SCHEDULE AND WALL ELEVATION (TYPE 5)

PROJECT NO: 2014–300 | SHT. 798 OF 866 | DWG NO. TD–S–009

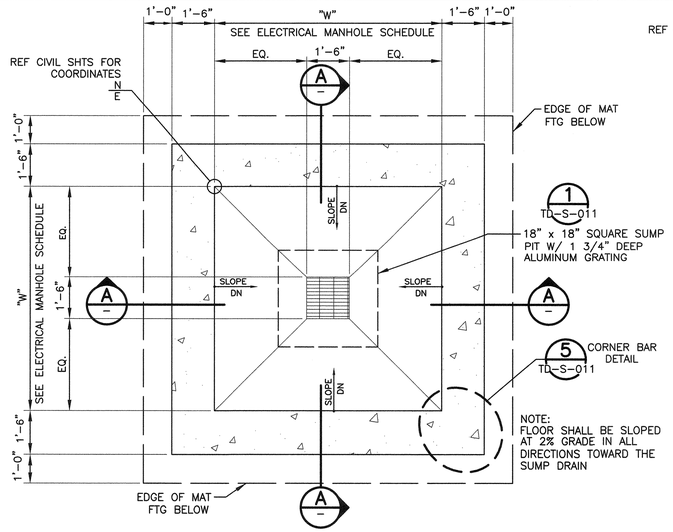

ELECTRICAL MANHOLE FLOOR SLAB PLAN 1

SCALE: 3/8" = 1'-0"

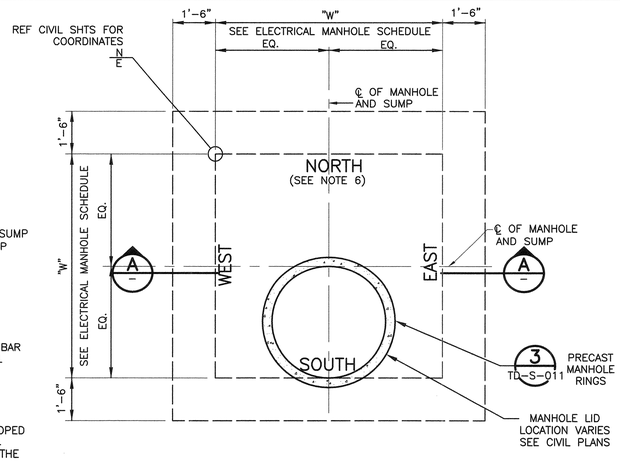

ELECTRICAL MANHOLE ROOF SLAB PLAN 2

SCALE: 3/8" = 1'-0"

NOTES:

1. INSTALL 6 MIL THICK POLYETHYLENE VAPOR BARRIER.
2. COLD-APPLIED CUT-BACK ASPHALT MASTIC: SOLVENT-BASED ASPHALTIC DAMPPROOFING MASTIC OF TROWELING (HEAVY) CONSISTENCY, FIBERATED, MEETING THE REQUIREMENTS OF FS SS-C-153, TYPE 1: ASBESTOS FREE. APPLY WATER-PROOFING MATERIAL TO ALL EXTERIOR BELOW GRADE SURFACES OF MANHOLE.

   ACCEPTABLE PRODUCTS INCLUDE THE FOLLOWING:

   a. "TEX-MASTIC TROWEL MASTIC No. 712"; TEXMASTIC TEXMASTIC INTERNATIONAL INC.

   b. "#86 AF FIBERATED TROWEL MASTIC"; KARNAK CORPORATION.

   c. "HYDROCIDE MASTIC"; SONNEBORN BULIDING PRODUCTS DIVISION/CHEMREX, INC.

   d. "SEALMASTIC TROWEL-MASTIC"; W.R. MEADOWS. INC.
3. REFERENCE DWG G-S-001 FOR GENERAL CONCRETE CONSTRUCTION NOTES.
4. CONCRETE FOR ELECTRICAL MANHOLES SHALL BE CLASS "S" (4,000 PSI), FOLLOWING REQUIREMENTS OF COA SPECIFICATION ITEM No. 430S, CONCRETE FOR STRUCTURES.
5. BACKFILL MANHOLE WITH CLASS A (SELECT BORROW) PER COA SPECIFICATION 130S "BORROW". REFER TO SPECIAL PROVISION SP401S "STRUCTURAL EXCAVATION AND BACKFILL" FOR PLACEMENT REQUIREMENTS.
6. THE TOP OF MANHOLE COVER ELEVATION SHALL BE ABOVE GRADE PER DETAIL 4/TD-S-011. EXISTING GRADE ELEVATIONS AND CONE NECK HEIGHTS SCHEDULED ARE FOR BIDDING PURPOSES AND SHALL BE FIELD VERIFIED BY CONTRACTOR PRIOR TO MANHOLE INSTALLATION. REFER TO CIVIL DRAWINGS FOR GRADE ELEVATIONS.

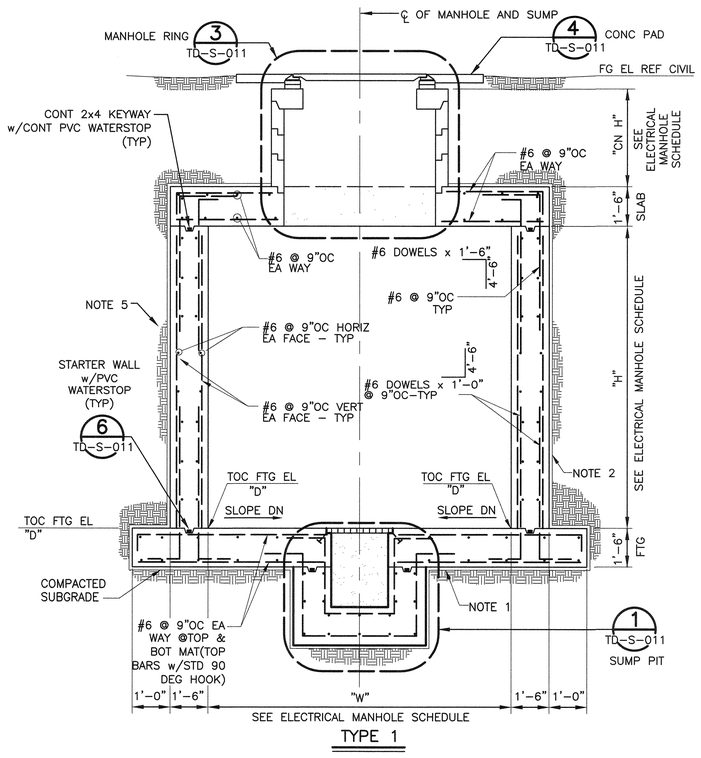

TYPE 1

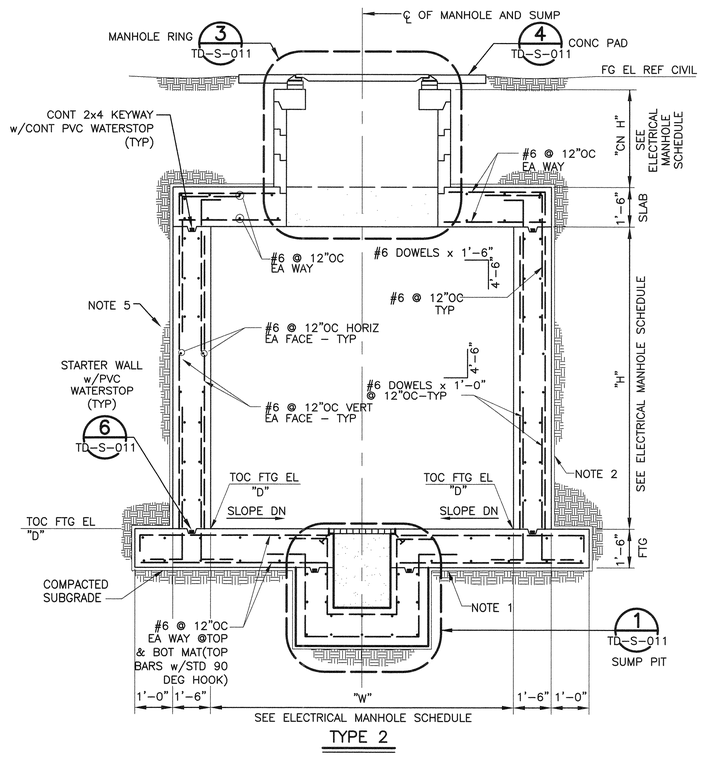

TYPE 2

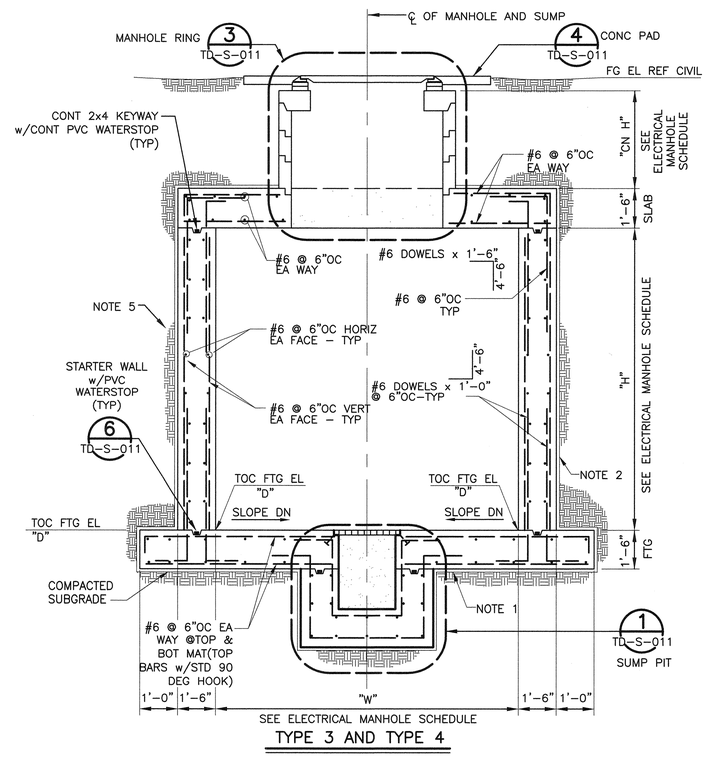

TYPE 3 AND TYPE 4

SECTIONS AT ELECTRICAL MANHOLES A

NTS

BAR LENGTH ON ORIGINAL DRAWING EQUALS ONE INCH, ADJUST SCALE ACCORDINGLY.

AECOM TECHNICAL SERVICES INC.
9400 AMBERGLEN BOULEVARD
AUSTIN, TEXAS 78729
WWW.AECOM.COM
TBPE REG. NO. F-3580

STATE OF TEXAS
TAREK M. REFAI
110484
LICENSED
PROFESSIONAL ENGINEER
9/23/19

NO.	DATE:	DESCRIPTION

HARUTUNIAN ENGINEERING INCORPORATED
TEXAS FIRM REGISTRATION NUMBER F-2408
ENGINEERING AND ENVIRONMENTAL CONSULTANTS
8100 CROSS PARK DRIVE
AUSTIN, TEXAS 78754

REUSE OF DOCUMENTS

This document, and the designs incorporated herein, is an instrument of professional service that has been developed, designed and prepared by Harutunian Engineering, Inc., and is not to be used, in whole or in part, for any other project without giving written notice to Harutunian Engineering, Inc.

DESIGNED BY:	TR
CHECKED BY:	CW
APPROVED BY:	SGE
SUBMITTAL DATE:	OCTOBER 2019
SCALE:	AS NOTED

SOUTH AUSTIN REGIONAL WASTEWATER TREATMENT PLANT
ELECTRICAL SUBSTATION NO. 1 REPLACEMENT PROJECT
CIP I.D.# 3333.032

ELECTRICAL MANHOLES STRUCTURAL PLAN AND SECTIONS

PROJECT NO: 2014-300 | SHT. 799 OF 866 | DWG NO. TD-S-010

E:\605205617.SARWWTP ELEC SUB NO. 1\900-WORKINGDOCS-CAD\910 CADD\20-SHEETS\TD-S-010.DWG BY: GADHIAT DATE: 9/23/2019 10:26 AM

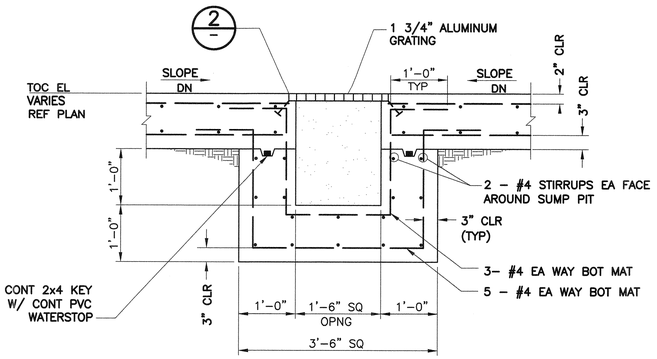

SUMP PIT DETAIL 1
NTS

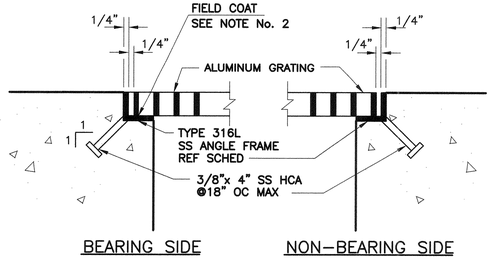

GRATING SUPPORT SCHEDULE	
GRATING DEPTH	SS EMBED ANGLE SIZE
1 3/4"	L 2"x2"x1/4"
2 1/4"	L 2 1/2"x2 1/2"x1/4"

NOTES:
1. 1/8"ø MAX NAIL HOLES MAY BE PUNCHED IN ∠'s @ 18" OC.
2. FIELD COAT BEARING SURFACE OF GRATING SUPPORT WITH A BITUMINOUS MASTIC (SSPC-PAINT 12) PER MFRS SPECIFICATIONS.
3. SECURELY FASTEN GRATING IN ACCORDANCE WITH MFRS RECOMMENDATIONS.
4. MITER AND WELD EMBED ANGLES AT CORNERS.

ALUMINUM GRATING SUPPORT DETAIL AND SCHEDULE 2
NTS

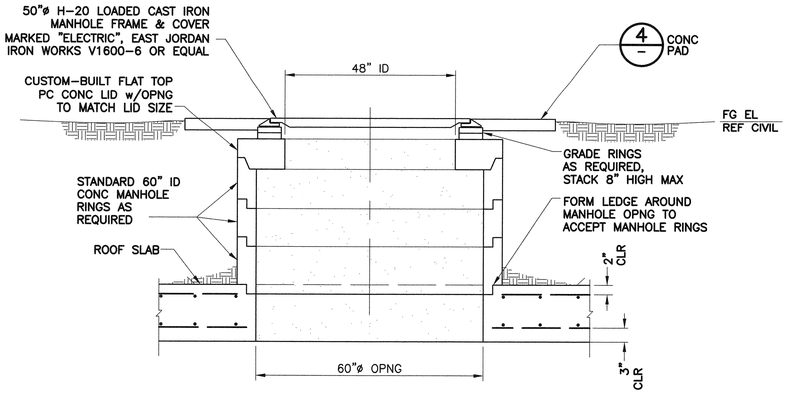

MANHOLE RING DETAIL 3
NTS

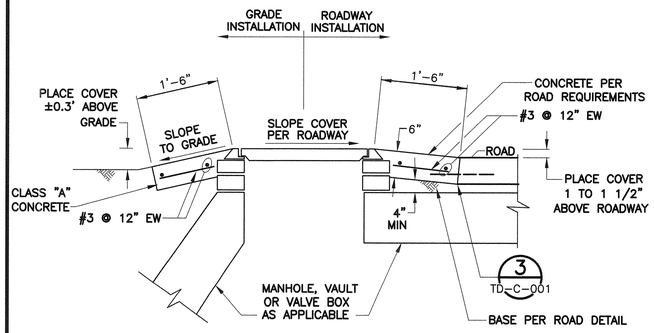

CONCRETE PAD DETAIL 4
NTS

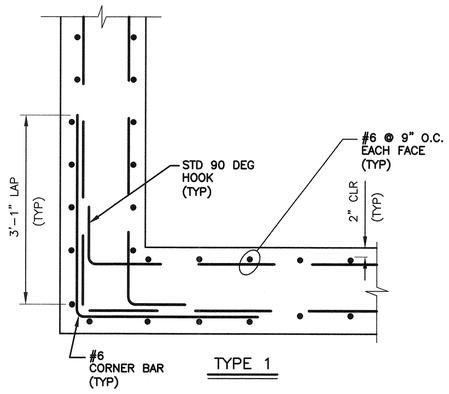

TYPE 1

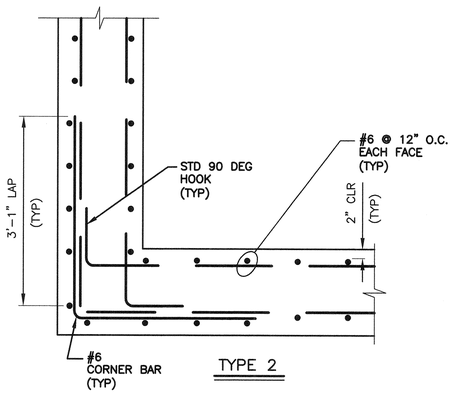

TYPE 2

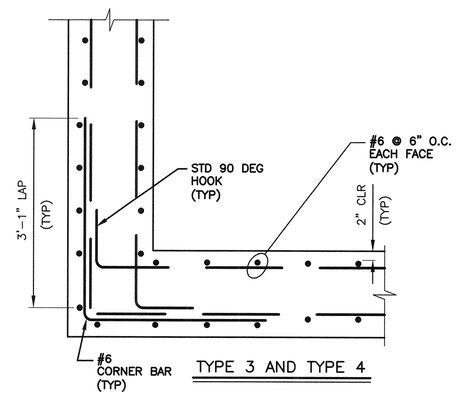

TYPE 3 AND TYPE 4

ELECTRICAL MANHOLES CORNER BAR DETAIL 5
SCALE: 3/4" = 1'-0"

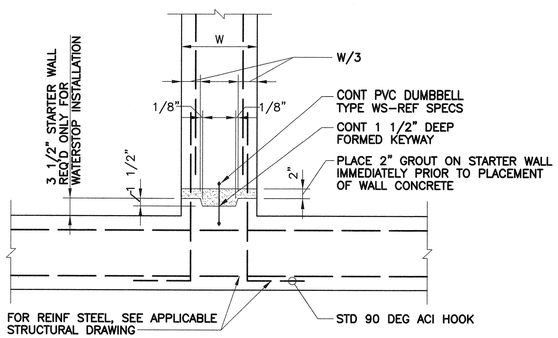

STARTER WALL DETAIL 6
NTS

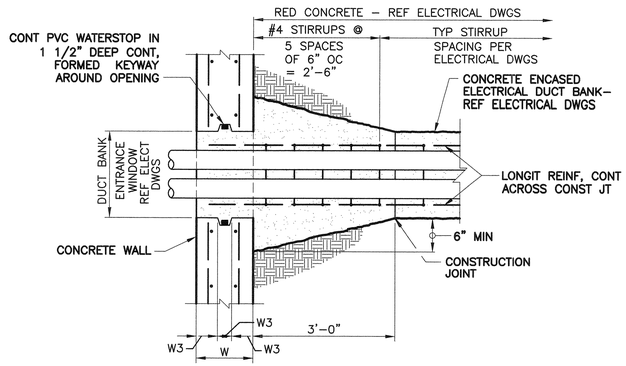

DUCTBANK CONNECTION TO NEW MANHOLE DETAIL 7
NTS

E:\605266\17 SARWWTP ELEC SUB NO. 1\900\WORKINGDOCS-CAD\910 CADD\20\SHEETS\TD-S-011.DWG BY: GADHIAT DATE: 9/23/2019 10:28 AM

BAR LENGTH ON ORIGINAL DRAWING EQUALS ONE INCH, ADJUST SCALE ACCORDINGLY.

AECOM
AECOM TECHNICAL SERVICES INC.
9400 AMBERGLEN BOULEVARD
AUSTIN, TEXAS 78729
WWW.AECOM.COM
TBPE REG. NO. F-3580

STATE OF TEXAS
TAREK M. REFAI
110484
LICENSED PROFESSIONAL ENGINEER
9/23/19

NO.	DATE:	DESCRIPTION

HARUTUNIAN ENGINEERING INCORPORATED
TEXAS FIRM REGISTRATION NUMBER F-2408
ENGINEERING AND ENVIRONMENTAL CONSULTANTS
8100 CROSS PARK DRIVE
AUSTIN, TEXAS 78754

REUSE OF DOCUMENTS
This document, and the designs incorporated herein, is an instrument of professional service that has been developed, designed and prepared by Harutunian Engineering, Inc., and is not to be used, in whole or in part, for any other project without giving written notice to Harutunian Engineering, Inc.

DESIGNED BY:	TR
CHECKED BY:	CW
APPROVED BY:	SGE
SUBMITTAL DATE:	OCTOBER 2019
SCALE:	AS NOTED

SOUTH AUSTIN REGIONAL WASTEWATER TREATMENT PLANT
ELECTRICAL SUBSTATION NO. 1 REPLACEMENT PROJECT
CIP I.D.# 3333.032

ELECTRICAL MANHOLES STRUCTURAL SECTIONS

PROJECT NO: 2014-300 | SHT. 800 OF 866 | DWG NO. TD-S-011

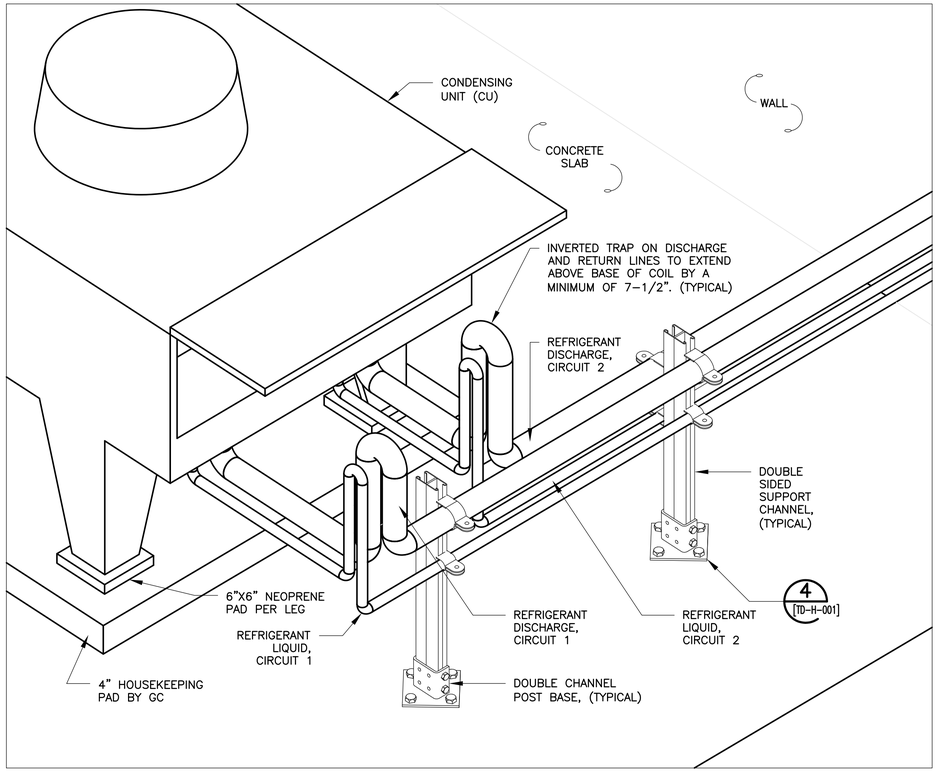

CONDENSING UNIT REFRIGERANT PIPING ISOMETRIC VIEW 1 [TD-H-001]

SCALE: N.T.S.

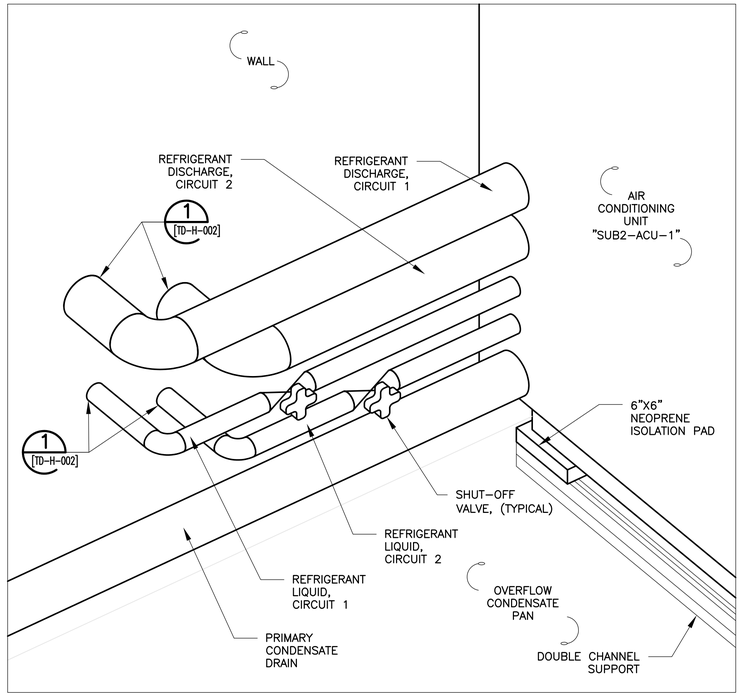

AIR HANDLING UNIT REFRIGERANT PIPING ISOMETRIC VIEW 2 [TD-H-001]

SCALE: N.T.S.

GENERAL NOTES

1. ALL REFRIGERANT LINES SHALL BE COVERED WITH 3/4" INSULATION. REFER TO AIR CONDITIONING UNIT SPECIFICATION SECTION 15783 FOR ADDITIONAL REQUIREMENTS.
2. PROVIDE STAINLESS-STEEL CLOSURE STRIPS AND END CAPS TO SUPPORT CHANNELS SUPPORTING CONDENSING UNIT CONDUIT AND REFRIGERANT PIPING AND CONDENSATE DRAIN LINE.
3. ACU "SUB1-ACU-001" AND "SUB1-ACU-002" CONDENSATE SHALL DRAIN INTO HUB DRAIN. REFERENCE DRAWING NO. [SUB1-H-006] AND [SUB1-H-007] SUPPORT LINE VIA WALL MOUNTED SINGLE CHANNEL SUPPORTS AND PIPE COLLARS. CONDENSATE DRAIN LINE SHALL BE SLOPED 1/8" PER FOOT OF RUN MINIMUM. INTERIOR CONDENSATE DRAIN LINE SHALL BE COVERED WITH 3/4" ELASTOMERIC INSULATION. REFER TO AIR CONDITIONING UNIT SPECIFICATION SECTION 15783 FOR ADDITIONAL REQUIREMENTS.
4. PIPE ROUTING SHOWN ON SHEET IS SCHEMATIC. REFER TO PLAN DRAWINGS FOR ADDITIONAL INFORMATION ON PIPE ROUTING.

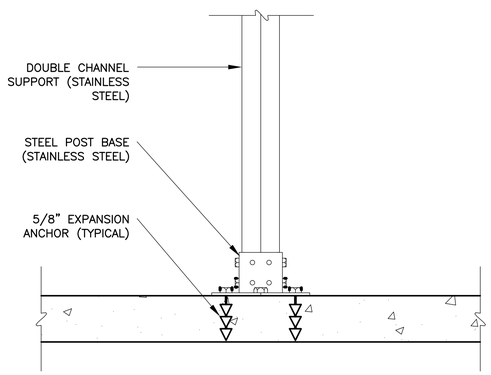

TYPICAL CHANNEL MOUNTING INSTALLATION DETAIL 3 [TD-H-001]

SCALE: N.T.S.

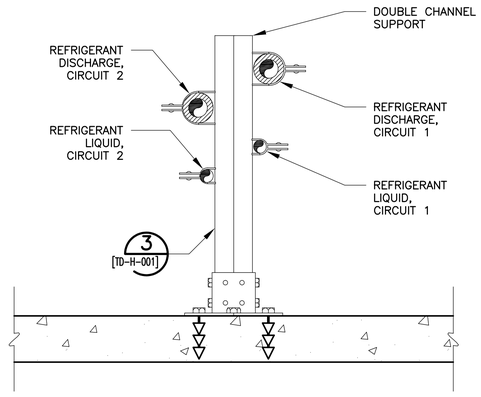

REFRIGERANT PIPING LAYOUT ELEVATION VIEW 4 [TD-H-001]

SCALE: N.T.S.

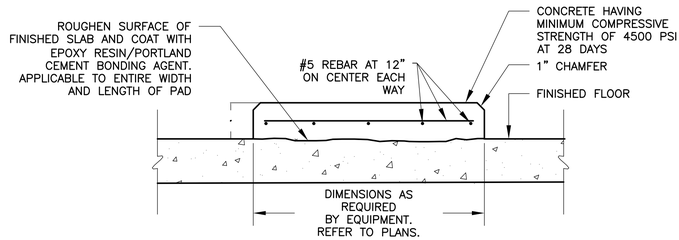

TYPICAL OUTDOOR MECHANICAL EQUIPMENT PAD CONCRETE SLAB DETAIL 5 [TD-H-001]

SCALE: N.T.S.

BAR LENGTH ON ORIGINAL DRAWING EQUALS ONE INCH, ADJUST SCALE ACCORDINGLY.

REUSE OF DOCUMENTS

This document, and the designs incorporated herein, is an instrument of professional service that has been developed, designed and prepared by Harutunian Engineering, Inc., and is not to be used, in whole or in part, for any other project without giving written notice to Harutunian Engineering, Inc.

NO.	DATE:	DESCRIPTION

HARUTUNIAN ENGINEERING INCORPORATED
TEXAS FIRM REGISTRATION NUMBER F-2408
ENGINEERING AND ENVIRONMENTAL CONSULTANTS
8100 CROSS PARK DRIVE
AUSTIN, TEXAS 78754

STATE OF TEXAS
VIGAIN HARUTUNIAN
87736
REGISTERED
PROFESSIONAL ENGINEER
10/7/2019

DESIGNED BY:	HEI
CHECKED BY:	HEI
APPROVED BY:	HEI
SUBMITTAL DATE:	OCTOBER 2019
SCALE:	AS SHOWN

SOUTH AUSTIN REGIONAL WASTEWATER TREATMENT PLANT
ELECTRICAL SUBSTATION NO. 1 REPLACEMENT PROJECT
CIP I.D.# 3333.032

CONDENSING UNIT SYSTEM INSTALLATION TYPICAL DETAILS

PROJECT NO: 2014-300 | SHT. 801 OF 866 | DWG NO. TD-H-001

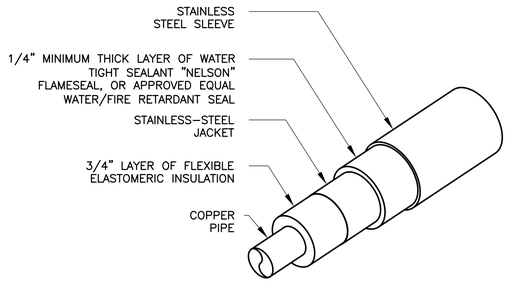

TYPICAL SLEEVED LAYERS FOR REFRIGERANT DISCHARGE LINE (1 / TD-H-002)

SCALE: N.T.S.

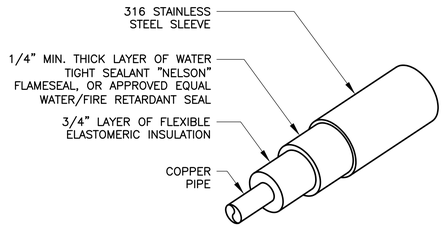

TYPICAL SLEEVED LAYERS FOR REFRIGERANT LIQUID LINE (2 / TD-H-002)

SCALE: N.T.S.

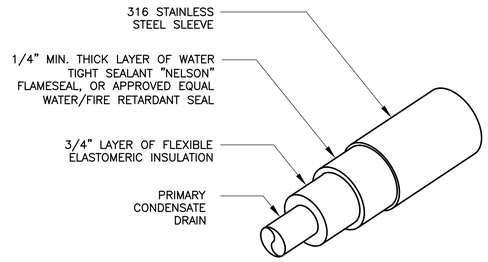

TYPICAL SLEEVED LAYERS FOR PRIMARY CONDENSATE DRAIN LINE (3 / TD-H-002)

SCALE: N.T.S.

GENERAL NOTES:

1. PROVIDE SLEEVED ASSEMBLY FOR PIPE PENETRATIONS THROUGH EXTERIOR WALL AS SHOWN IN DETAILS ON THIS SHEET.
2. PROVIDE NON-SHRINK GROUT BETWEEN SLEEVE AND WALL FOR ALL SLEEVED WALL PENETRATIONS UNLESS NOTED OTHERWISE.
3. SLEEVE ASSEMBLIES SHOWN ON SHEET APPLY TO PORTION OF PIPE WITHIN THE WALL PENETRATION. SLEEVE SHALL BE FLUSH TO EXTERIOR AND INTERIOR WALL FACES. JACKET SHALL EXTEND 3" MINIMUM INSIDE SLEEVE. JACKET NOT REQUIRED FOR ENTIRE LENGTH OF SLEEVE.

TYPICAL SLEEVED LAYERS FOR OVERFLOW CONDENSATE DRAIN LINE (4 / TD-H-002)

SCALE: N.T.S.

TYPICAL MECHANICAL WALL PENETRATIONS, INTERIOR AND EXTERIOR LINES (5 / TD-H-002)

SCALE: N.T.S.

BAR LENGTH ON ORIGINAL DRAWING EQUALS ONE INCH, ADJUST SCALE ACCORDINGLY.

REUSE OF DOCUMENTS

This document, and the designs incorporated herein, is an instrument of professional service that has been developed, designed and prepared by Harutunian Engineering, Inc., and is not to be used, in whole or in part, for any other project without giving written notice to Harutunian Engineering, Inc.

NO.	DATE:	DESCRIPTION

HARUTUNIAN ENGINEERING INCORPORATED
TEXAS FIRM REGISTRATION NUMBER F-2408
ENGINEERING AND ENVIRONMENTAL CONSULTANTS
8100 CROSS PARK DRIVE
AUSTIN, TEXAS 78754

STATE OF TEXAS · VIGAIN HARUTUNIAN · 87736 · REGISTERED PROFESSIONAL ENGINEER · 10/7/2019

DESIGNED BY:	HEI
CHECKED BY:	HEI
APPROVED BY:	HEI
SUBMITTAL DATE:	OCTOBER 2019
SCALE:	AS SHOWN

SOUTH AUSTIN REGIONAL WASTEWATER TREATMENT PLANT
ELECTRICAL SUBSTATION NO. 1 REPLACEMENT PROJECT
CIP I.D.# 3333.032

HVAC PIPE WALL PENETRATION SLEEVE TYPICAL DETAILS

PROJECT NO: 2014-300 | SHT. 802 OF 866 | DWG NO. TD-H-002

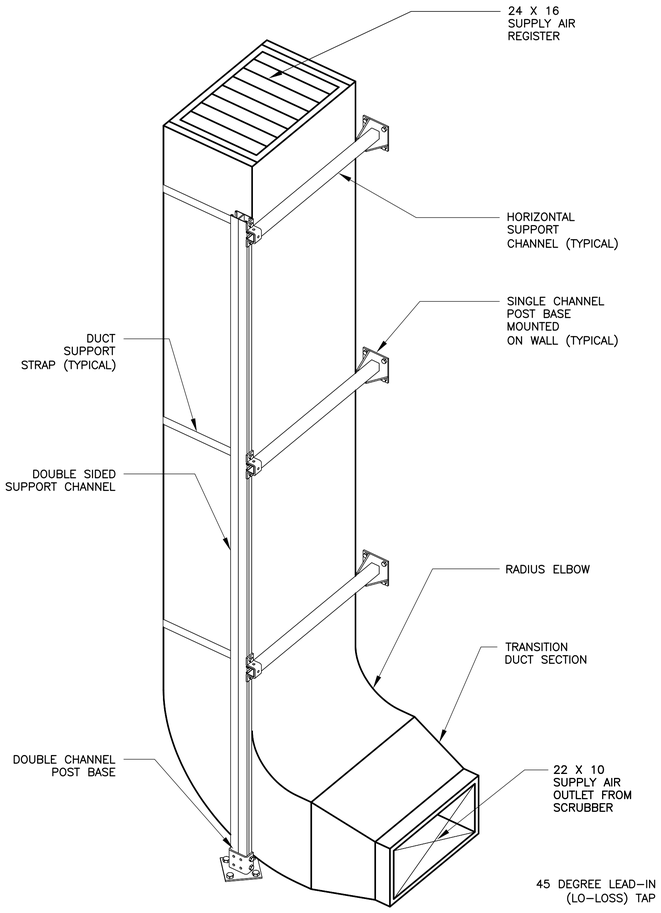

AIR SCRUBBER "SUB1–F–001" AND "SUB1–F–002" TYPICAL SUPPLY DUCTWORK ISOMETRIC VIEW 1 [TD–H–003]

SCALE: N.T.S.

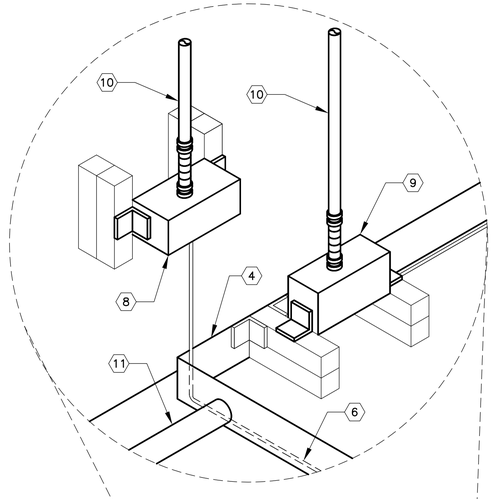

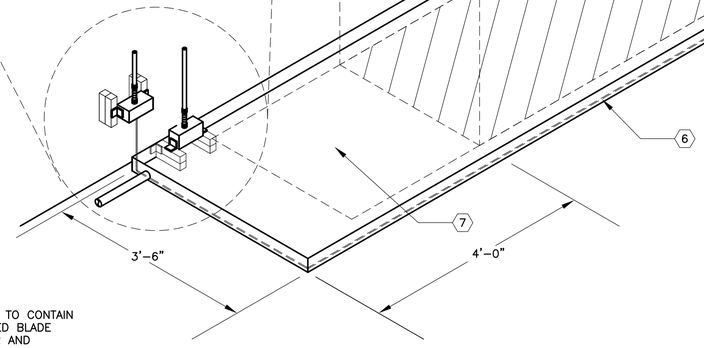

ACU "SUB1–ACU–001" AND "SUB1–ACU–002" TYPICAL AIR DISTRIBUTION SUPPLY REGISTER MOUNTING ISOMETRIC VIEW 2 [TD–H–003]

SCALE: N.T.S.

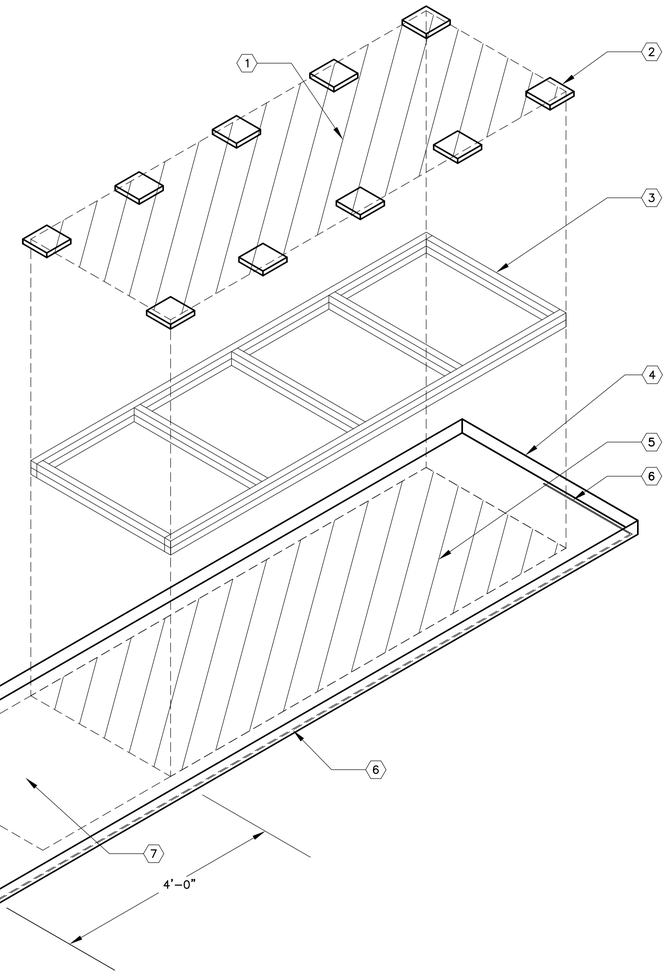

ACU "SUB1–ACU–001" AND "SUB1–ACU–002" TYPICAL OVERFLOW PAN ASSEMBLY DETAIL 3 [TD–H–003]

SCALE: N.T.S.

KEY NOTES:

1. AIR CONDITIONING UNIT FOOTPRINT.
2. 6"X6" NEOPRENE PAD. PROVIDE TEN (10) TOTAL AS SHOWN. INSTALL BETWEEN AIR CONDITIONING UNITS AND CHANNEL SUPPORT BASE.
3. 316 SS DOUBLE CHANNEL SUPPORT BASE. BASE SHALL ELEVATE UNIT 3" ABOVE FINISHED FLOOR. DIMENSION EXTENT OF SUPPORT FRAME TO UNIT FOOTPRINT (NOT OVERALL DIMENSIONS).
4. PROVIDE A 160" X 44" X 3" DEEP 316L SS OVERFLOW DRAIN PAN. PAN SHALL BE 14 GAGE THICKNESS MINIMUM. ALL SEAMS SHALL BE STAINLESS STEEL WELDED.
5. SUPPORT BASE FOOTPRINT.
6. WATER DETECTION CABLE. REFERENCE DRAWING NO. [SUB1–H–004] AND [SUB1–H–005] KEY NOTE NO. 2.
7. PROVIDE 36" CLEARANCE MINIMUM IN FRONT OF UNIT ACCESS PANELS.
8. WATER DETECTION TRANSMITTER "WDT–1". REFERENCE DRAWING NO. [SUB1–H–004] AND [SUB1–H–005] KEY NOTE NO. 1. MOUNT TO WALL WITH DOUBLE CHANNEL SUPPORTS AS SHOWN.
9. WATER DETECTION TRANSMITTER "WDT–2". REFERENCE DRAWING NO. [SUB1–H–004] AND [SUB1–H–005] KEY NOTE NO. 3. MOUNT TO PAN WITH DOUBLE CHANNEL SUPPORTS AS SHOWN. MECHANICALLY SECURE SUPPORT CHANNELS TO EDGE OF PAN WITH ANGLE BRACKETS. BOTTOM OF WDT BOX SHALL NOT BE BELOW RIM OF PAN. ADJUST WDT BOX SUCH THAT PROBE TIPS ARE 1/2" BELOW RIM OF PAN. INSTALL CONDUITS AFTER WDT BOX HEIGHT IS PROPERLY ADJUSTED.
10. WATER DETECTION TRANSMITTER WDT 3/4" POWER AND CONTROL CONDUITS PER ELECTRICAL REQUIREMENTS.
11. SECONDARY (OVERFLOW) CONDENSATE DRAIN.

GENERAL NOTES

1. PROVIDE STAINLESS STEEL CLOSURE STRIPS AND END CAPS TO SUPPORT CHANNELS.
2. REFER TO DRAWING NO. [SUB1–H–004] AND [SUB1–H–005] FOR WATER DETECTION TRANSMITTER WDT REQUIREMENTS.

BAR LENGTH ON ORIGINAL DRAWING EQUALS ONE INCH, ADJUST SCALE ACCORDINGLY.

REUSE OF DOCUMENTS

This document, and the designs incorporated herein, is an instrument of professional service that has been developed, designed and prepared by Harutunian Engineering, Inc., and is not to be used, in whole or in part, for any other project without giving written notice to Harutunian Engineering, Inc.

NO.	DATE:	DESCRIPTION

HARUTUNIAN ENGINEERING INCORPORATED
TEXAS FIRM REGISTRATION NUMBER F–2408
ENGINEERING AND ENVIRONMENTAL CONSULTANTS
8100 CROSS PARK DRIVE
AUSTIN, TEXAS 78754

STATE OF TEXAS · VIGAIN HARUTUNIAN · 87736 · REGISTERED · PROFESSIONAL ENGINEER · 10/7/2019

DESIGNED BY:	HEI
CHECKED BY:	HEI
APPROVED BY:	HEI
SUBMITTAL DATE:	OCTOBER 2019
SCALE:	AS SHOWN

SOUTH AUSTIN REGIONAL WASTEWATER TREATMENT PLANT
ELECTRICAL SUBSTATION NO. 1 REPLACEMENT PROJECT
CIP I.D.# 3333.032

ACU, AIR DEVICE AND SCRUBBER ASSEMBLY TYPICAL DETAILS

PROJECT NO: 2014–300 | SHT. 803 OF 866 | DWG NO. TD–H–003

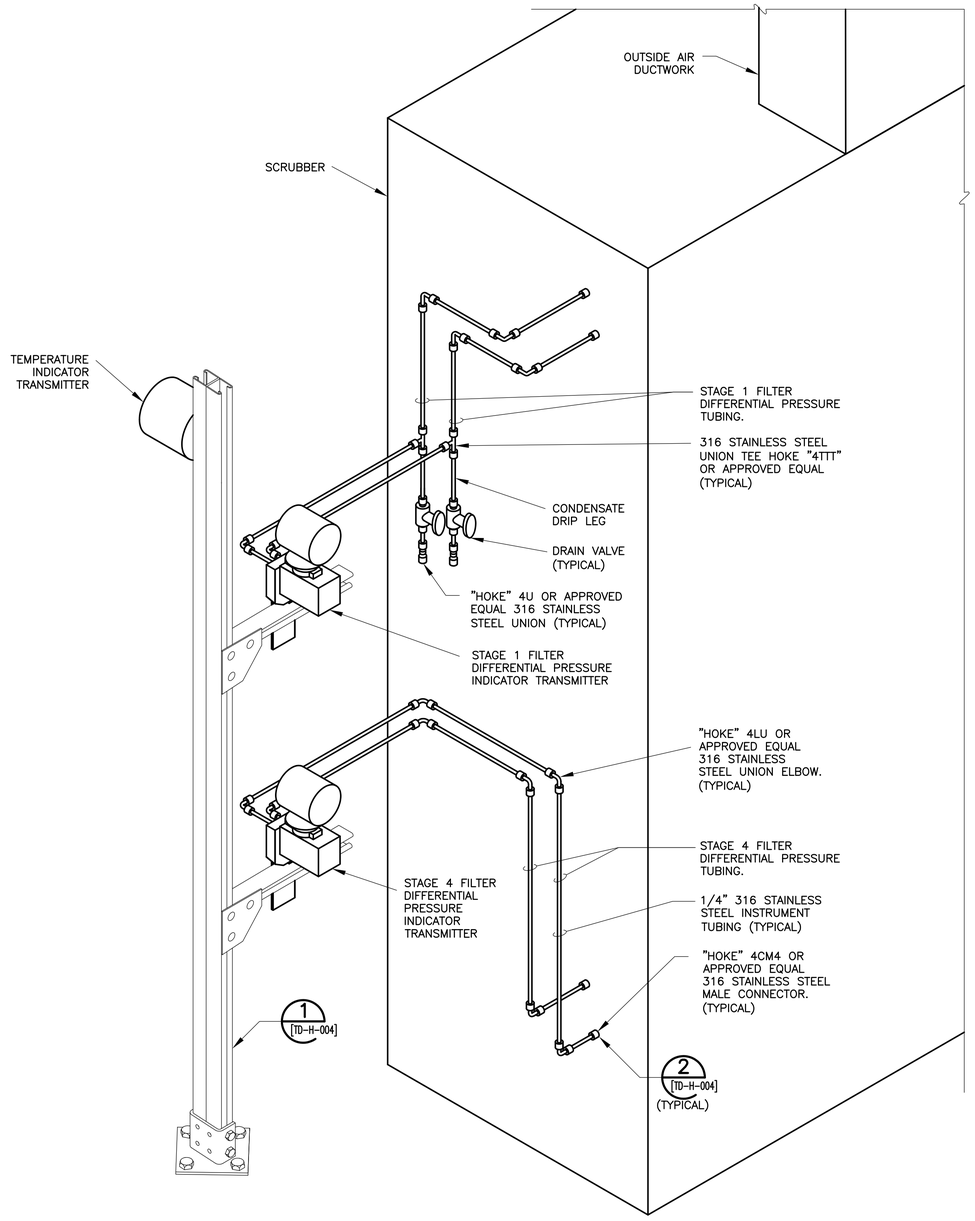

STATIC PRESSURE INSTRUMENT TUBING FOR AIR SCRUBBING SYSTEM "SUB1-F-001" AND "SUB1-F-002" TYPICAL INSTALLATION DETAIL 1 [TD-H-004]

SCALE: N.T.S.

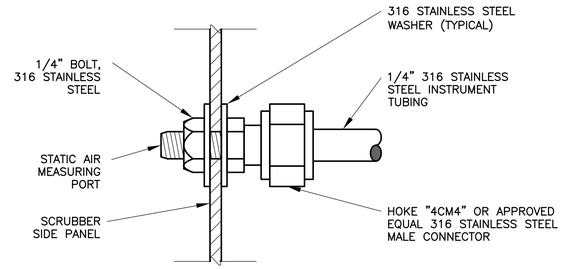

STATIC AIR PRESSURE PORT INSTALLATION FOR AIR SCRUBBER SYSTEM "SUB1-F-001" AND "SUB1-F-002" 2 [TD-H-004]

SCALE: N.T.S.

KEY NOTES:

(1) DIFFERENTIAL PRESSURE TUBING NOT SHOWN IN INSTALLATION DETAIL FOR CLARITY. TUBING WILL BE CONNECTED TO PROCESS CONNECTIONS ON DIFFERENTIAL PRESSURE MANIFOLD.

GENERAL NOTES:

1. COORDINATE SCRUBBER PANEL PENETRATIONS FOR DIFFERENTIAL PRESSURE TAPS WITH MANUFACTURER. ALLOW SUFFICIENT SPACE FOR VALVE ACCESS AND CALIBRATION PORT CONNECTIONS.
2. INSTALL MALE CONNECTOR FOR EACH SCRUBBER STATIC PRESSURE PORT, AS SHOWN IN DETAIL NO. 2 ON THIS SHEET.

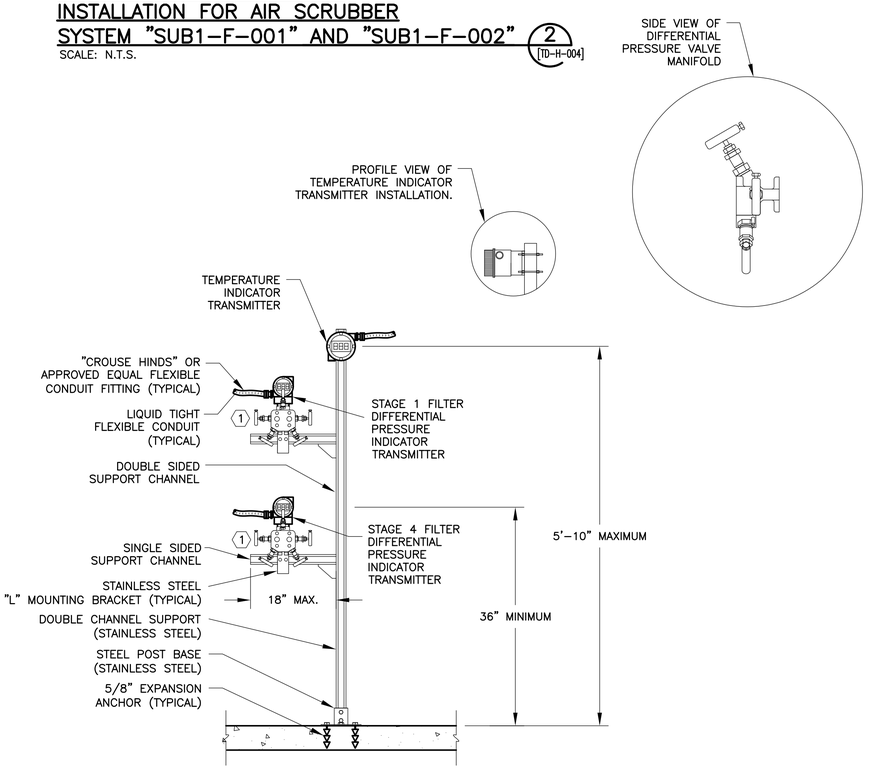

TEMPERATURE, FLOW AND PRESSURE INDICATOR TRANSMITTERS FOR AIR SCRUBBING SYSTEM "SUB1-F-001" AND "SUB1-F-002" TYPICAL INSTALLATION DETAIL 3 [TD-H-004]

SCALE: N.T.S.

BAR LENGTH ON ORIGINAL DRAWING EQUALS ONE INCH, ADJUST SCALE ACCORDINGLY.

REUSE OF DOCUMENTS

This document, and the designs incorporated herein, is an instrument of professional service that has been developed, designed and prepared by Harutunian Engineering, Inc., and is not to be used, in whole or in part, for any other project without giving written notice to Harutunian Engineering, Inc.

NO.	DATE:	DESCRIPTION

HARUTUNIAN ENGINEERING INCORPORATED
TEXAS FIRM REGISTRATION NUMBER F-2408
ENGINEERING AND ENVIRONMENTAL CONSULTANTS
8100 CROSS PARK DRIVE
AUSTIN, TEXAS 78754

STATE OF TEXAS · VIGAIN HARUTUNIAN · 87736 · REGISTERED · PROFESSIONAL ENGINEER · 10/7/2019

DESIGNED BY:	HEI
CHECKED BY:	HEI
APPROVED BY:	HEI
SUBMITTAL DATE:	OCTOBER 2019
SCALE:	AS SHOWN

SOUTH AUSTIN REGIONAL WASTEWATER TREATMENT PLANT
ELECTRICAL SUBSTATION NO. 1 REPLACEMENT PROJECT
CIP I.D.# 3333.032

SCRUBBER INSTRUMENT PIPING & TRANSMITTER INSTALLATION TYPICAL DETAILS

PROJECT NO: 2014-300 | SHT. 804 OF 866 | DWG NO. TD-H-004

LIGHTING FIXTURE SCHEDULE

TYPE	LAMP	MANUF./CATALOG NO.	DESCRIPTION
A	LED 7000 LUMENS	HOLOPHANE #HMRL-8L-4-AS-F1-TG OR APPROVED EQUAL	4-FT CEILING MOUNTED LED LUMINAIRE. LENS SHALL BE TEMPERED GLASS. HOUSING SHALL BE FORMED FROM COPPER FREE ALUMINUM. FIXTURE SHALL BE ABLE TO OPERATE IN AN AMBIENT TEMPERATURE RANGE FROM -20°C TO +55°C. TOTAL HARMONIC DISTORTION SHALL BE 20 PERCENT OR LESS. DRIVERS AND LED CIRCUIT BOARDS SHALL BE CAPABLE OF BEING DISCONNECTED AND REMOVED FROM THE FIXTURE IN THE FIELD. LED COLOR TEMPERATURE SHALL BE COOL WHITE, WITH MINIMUM CRI OF 80. DRIVER POWER FACTOR SHALL BE 0.9 LAGGING AT MINIMUM. THE LUMINAIRE SHALL BE UL LISTED FOR CLASS 1 DIVISION 2 LOCATIONS. COMPLY WITH LIGHTING FIXTURE SCHEDULE NOTE 1.
K	LED 3000 LUMENS	HOLOPHANE #HW4G-10C-1000-50K-T3M-MVOLT-DF-BZSDP OR APPROVED EQUAL	WALL MOUNTED, LED LUMINAIRE. HOUSING AND DOOR FRAME SHALL BE OF CORROSION-RESISTANT, DIE-CAST ALUMINUM. HARDWARE SHALL BE OF STAINLESS STEEL. FINISH SHALL BE DARK BRONZE. FIXTURE SHALL BE ABLE TO OPERATE IN AN AMBIENT TEMPERATURE RANGE FROM 0°C TO +40°C. TOTAL HARMONIC DISTORTION SHALL BE 20 PERCENT OR LESS. DRIVERS AND LED CIRCUIT BOARDS SHALL BE CAPABLE OF BEING DISCONNECTED AND REMOVED FROM THE FIXTURE IN THE FIELD. LED COLOR TEMPERATURE SHALL BE COOL WHITE, WITH MINIMUM CRI OF 80. DRIVER POWER FACTOR SHALL BE 0.9 LAGGING AT MINIMUM. THE LUMINAIRE SHALL BE UL LISTED FOR CLASS 1 DIVISION 2 LOCATIONS. COMPLY WITH LIGHTING FIXTURE SCHEDULE NOTE 1.
X	LED	COOPER #UX70RBKSD UXUK OR APPROVED EQUAL	UNIVERSAL MOUNTED, DOUBLE FACED NEMA 4X RATED, LED EXIT SIGN COMPLETE WITH SEALED LONG LIFE HEAVY DUTY NICKEL CADMIUM BATTERY AND 120V/277V AS REQUIRED BY CHARGER. HOUSING SHALL BE OF CAST ALUMINUM CONSTRUCTION WITH BLACK ENAMEL FINISH AND RED LETTERS WITH STENCIL FACE OF BRUSHED ALUMINUM. EACH FACE SHALL BE COVERED BY A HEAVY DUTY POLYCARBONATE LENS. FIXTURE SHALL HAVE SELF DIAGNOSTIC TESTING FUNCTIONALITY TO PERFORM PERIODIC AND AUTOMATIC SELF TEST OF BATTERY AND CIRCUIT OPERATION AND INDICATE FAILURE VIA INTEGRAL DIAGNOSTIC LED INDICATING LIGHT MOUNTED ON THE SIDE OF THE FIXTURE. THE SOLID STATE CHARGER SHALL HAVE INTEGRAL TEST SWITCH AND BE CAPABLE TO FULLY CHARGE BATTERIES WITHIN 24 HOURS. THE UNIT SHALL BE UL LISTED AND MEETS THE CURRENT LIFE SAFETY CODE, NFPA 101, THE NEC AND OSHA ILLUMINATIONS STANDARDS. FURNISH WITH ARROW IN DIRECTION AS SHOW ON PLANS. FURNISH WITH DOUBLE FACE WHERE SHOWN ON THE PLANS.
Y	(2) LED	EMERGI-LITE #12HP-M30-2-L10 SERIES OR APPROVED EQUAL	WALL MOUNTED 12V TWIN LIGHT, BATTERY EMERGENCY LUMINAIRE. NEMA 4X CABINET SHALL BE CONSTRUCTED OF MOLDED FIBERGLASS WITH ASA 61 GRAY FINISH AND WITH FULLY GASKETED FRONT DOOR. PROVIDE WITH CHORD AND PLUG WHERE SHOWN ON PLANS. COMPLETE UNIT SHALL COME WITH A 3-YEAR FULL WARRANTY. UNIT SHALL BE UL LISTED.

LIGHTING FIXTURE SCHEDULE NOTES:

1. ALTHOUGH IT MAY NOT BE SHOWN ON THE PLANS, THE CONTRACTOR SHALL SIZE, FURNISH, AND INSTALL A DEDICATED JUNCTION BOX, LID, AND MOUNTING HARDWARE FOR EACH LIGHT FIXTURE.

BAR LENGTH ON ORIGINAL DRAWING EQUALS ONE INCH, ADJUST SCALE ACCORDINGLY.

REUSE OF DOCUMENTS

This document, and the designs incorporated herein, is an instrument of professional service that has been developed, designed and prepared by Harutunian Engineering, Inc., and is not to be used, in whole or in part, for any other project without giving written notice to Harutunian Engineering, Inc.

NO.	DATE:	DESCRIPTION

HARUTUNIAN ENGINEERING INCORPORATED

TEXAS FIRM REGISTRATION NUMBER F-2408

ENGINEERING AND ENVIRONMENTAL CONSULTANTS
8100 CROSS PARK DRIVE
AUSTIN, TEXAS 78754

STATE OF TEXAS
SHANT HARUTUNIAN
87735
REGISTERED
PROFESSIONAL ENGINEER
10/7/2019

DESIGNED BY:	HEI
CHECKED BY:	HEI
APPROVED BY:	HEI
SUBMITTAL DATE:	OCTOBER 2019
SCALE:	AS SHOWN

SOUTH AUSTIN REGIONAL WASTEWATER TREATMENT PLANT
ELECTRICAL SUBSTATION NO. 1 REPLACEMENT PROJECT
CIP I.D.# 3333.032

ELECTRICAL STANDARD
DETAILS I

PROJECT NO: 2014-300 | SHT. 805 OF 866 | DWG NO. TD-E-001

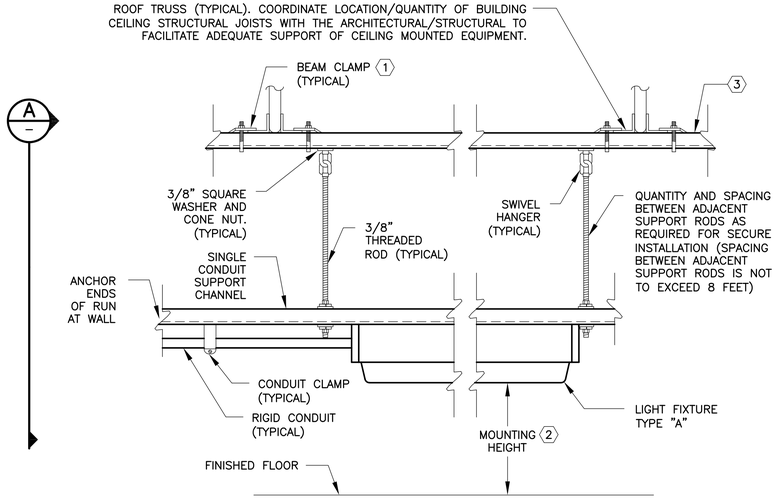

LIGHT FIXTURE MOUNTING DETAIL (1) [TD-E-002]

SCALE: N.T.S.

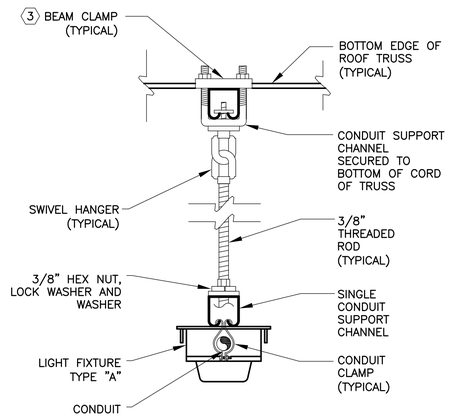

SECTION (A) [TD-E-002]

SCALE: N.T.S.

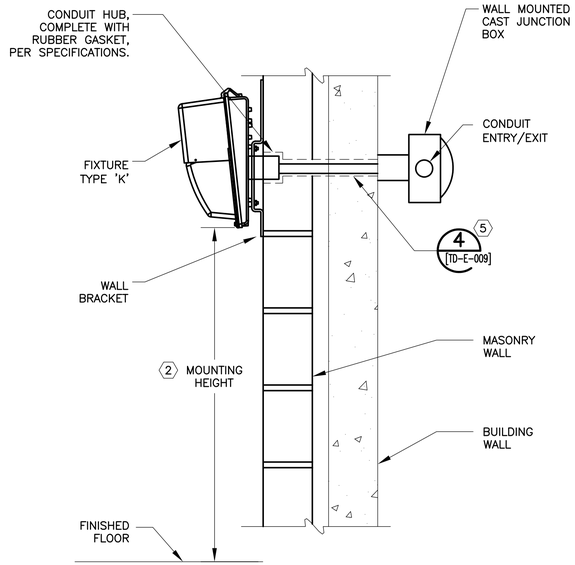

EXTERIOR LIGHT FIXTURE WALL PENETRATION MOUNTING DETAIL (3) [TD-E-002]

SCALE: N.T.S.

KEY NOTES:

1. THE STRUCTURE TYPE TO WHICH EQUIPMENT AND/OR SUPPORT SYSTEMS SHALL BE MOUNTED MAY VARY. THE EQUIPMENT ANCHOR TYPE SHALL CORRESPOND TO THE TYPE OF STRUCTURE TO WHICH THE EQUIPMENT AND/OR SUPPORT SYSTEMS ARE ATTACHED. THE DRAWING REFLECTS A SPECIFIC STRUCTURE TYPE WITH CORRESPONDING ANCHOR TYPE AND IS TYPICAL FOR THE STRUCTURE TYPE SHOWN. TO ATTACH EQUIPMENT/SUPPORT SYSTEMS TO PRE-CAST/CAST-IN-PLACE CONCRETE WALL/FLOOR SLAB STRUCTURE TYPES, FURNISH AND INSTALL BOLT WITH EXPANSION ANCHOR. TO ATTACH EQUIPMENT/SUPPORT SYSTEMS TO A CONCRETE MASONRY UNIT (CMU)/BRICK WALL STRUCTURE TYPE, FURNISH AND INSTALL BOLT WITH EXPANSION ANCHOR. TO ATTACH EQUIPMENT/SUPPORT SYSTEMS TO STEEL STRUCTURE TYPE, FURNISH AND INSTALL BOLTING ASSEMBLY. COORDINATE ATTACHMENT REQUIREMENTS WITH STRUCTURAL.
2. MOUNTING HEIGHT AS SHOWN ON LIGHTING PLANS.
3. CONDUIT SUPPORT CHANNEL SECURED TO BOTTOM CORD OF TRUSS (TYPICAL). FURNISH AND INSTALL ALL NECESSARY BOLTS/NUTS/FITTINGS/HARDWARE/ETC., FOR ATTACHMENT TO BUILDING STRUCTURE PER ARCHITECTURAL/STRUCTURAL RECOMMENDATIONS.
4. WHERE SHOWN ON PLANS, FURNISH AND INSTALL 3-CONDUCTOR #16 TYPE SO MULTI-CONDUCTOR CABLE BETWEEN RECEPTACLE AND LIGHT FIXTURE. FURNISH AND INSTALL CORD/CABLE FITTING (NOT SHOWN) TO TERMINATE CABLE TO FIXTURE. FURNISH AND INSTALL 1P-20A NEMA PLUG TO TERMINATE CABLE TO RECEPTACLE.
5. AT THIS LOCATION PROPOSED CONDUIT/WIRE PENETRATES THROUGH STRUCTURAL WALL ACCORDING TO THE DETAIL 4 ON DRAWING NO. [TD-E-009]. CONTRACTOR TO SEAL/PACK COMPLETELY, INTERIOR AREA OF CONDUIT AROUND WIRE WITH APPROVED SEALANT/FIRE RETARDANT TO PREVENT THE TRANSFER OF CORROSIVE GASES INTO THE INTERIOR AREA OF THE SUBSTATION NO. 1 BUILDING. SEALING FITTING PER SPECIFICATION MAY BE SUBSTITUTED FOR DESCRIBED PROCEDURE AT CONTRACTORS DISCRETION.

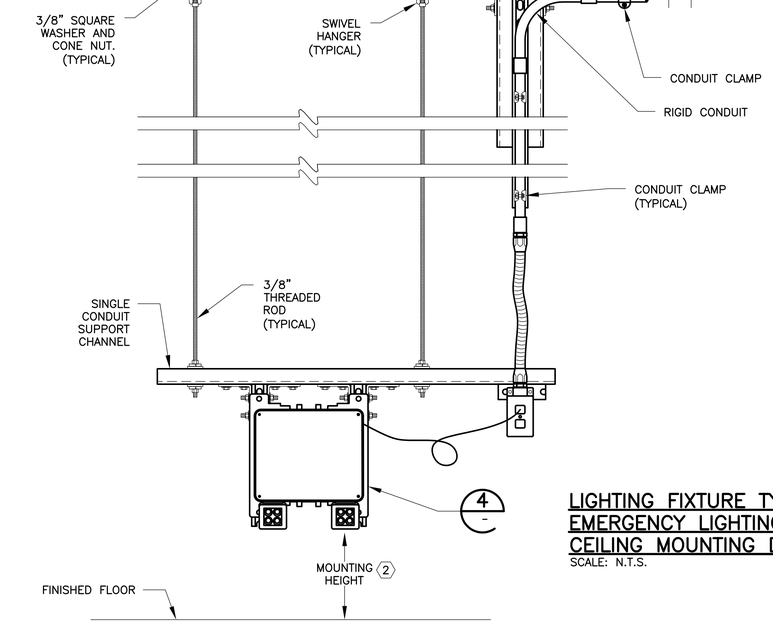

LIGHTING FIXTURE TYPE "Y" EMERGENCY LIGHTING CEILING MOUNTING DETAIL (2) [TD-E-002]

SCALE: N.T.S.

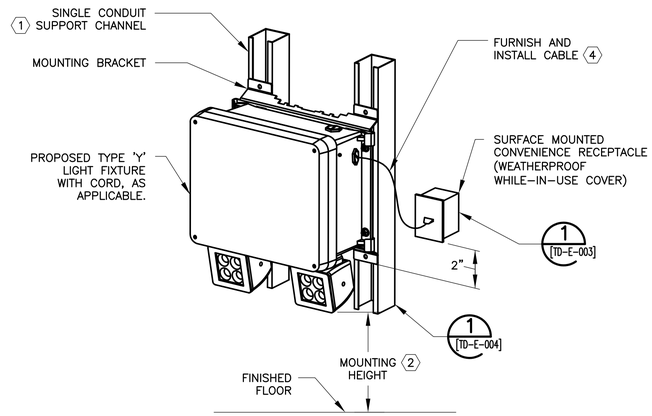

LIGHTING FIXTURE TYPE "Y" EMERGENCY LIGHTING MOUNTING DETAIL (4) [TD-E-002]

SCALE: N.T.S.

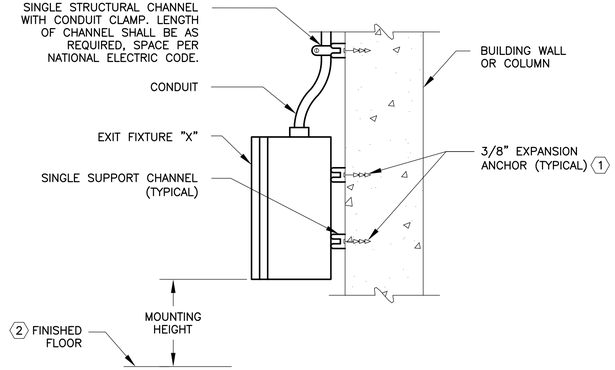

EXIT LIGHT FIXTURE WALL MOUNTING DETAIL (5) [TD-E-002]

SCALE: N.T.S.

BAR LENGTH ON ORIGINAL DRAWING EQUALS ONE INCH, ADJUST SCALE ACCORDINGLY.

REUSE OF DOCUMENTS

This document, and the designs incorporated herein, is an instrument of professional service that has been developed, designed and prepared by Harutunian Engineering, Inc., and is not to be used, in whole or in part, for any other project without giving written notice to Harutunian Engineering, Inc.

NO.	DATE:	DESCRIPTION

HARUTUNIAN ENGINEERING INCORPORATED

TEXAS FIRM REGISTRATION NUMBER F-2408

ENGINEERING AND ENVIRONMENTAL CONSULTANTS
8100 CROSS PARK DRIVE
AUSTIN, TEXAS 78754

STATE OF TEXAS · SHANT HARUTUNIAN · 87735 · REGISTERED PROFESSIONAL ENGINEER · 10/7/2019

DESIGNED BY:	HEI
CHECKED BY:	HEI
APPROVED BY:	HEI
SUBMITTAL DATE:	OCTOBER 2019
SCALE:	AS SHOWN

SOUTH AUSTIN REGIONAL WASTEWATER TREATMENT PLANT
ELECTRICAL SUBSTATION NO. 1 REPLACEMENT PROJECT
CIP I.D.# 3333.032

ELECTRICAL STANDARD DETAILS II

PROJECT NO: 2014-300 | SHT. 806 OF 866 | DWG NO. TD-E-002

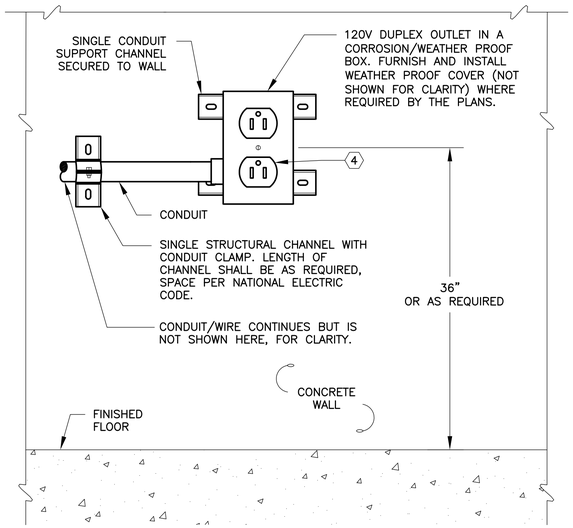

SURFACE/WALL MOUNTED CONVENIENCE RECEPTACLE DETAIL 1 [TD-E-003]

SCALE: N.T.S.

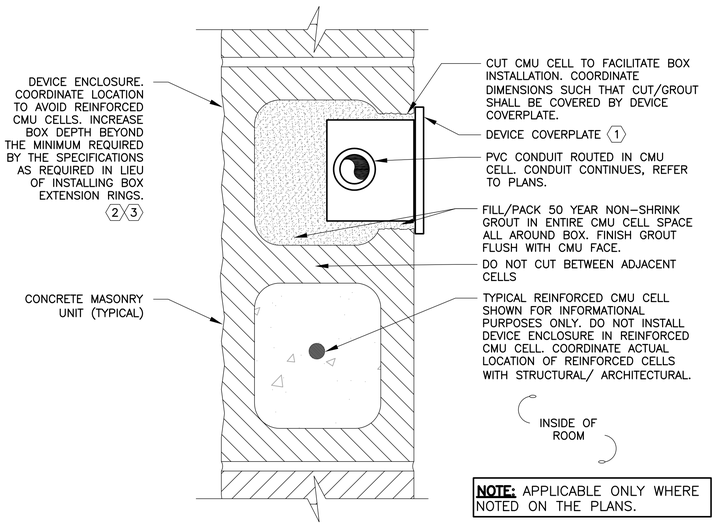

NOTE: APPLICABLE ONLY WHERE NOTED ON THE PLANS.

DEVICE ENCLOSURE RECESSED IN CONCRETE MASONRY UNIT WALL INSTALLATION DETAIL 2 [TD-E-003]

SCALE: N.T.S.

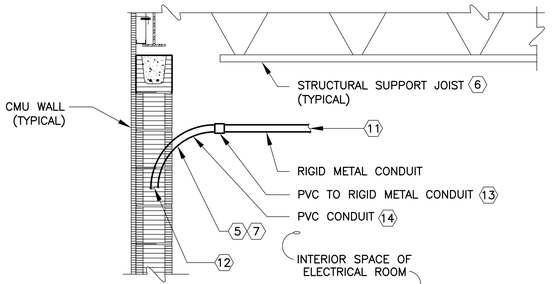

NOTE: APPLICABLE ONLY WHERE NOTED ON THE PLANS.

CONDUIT RECESSED IN CMU WALL INSTALLATION DETAIL 3 [TD-E-003]

SCALE: N.T.S.

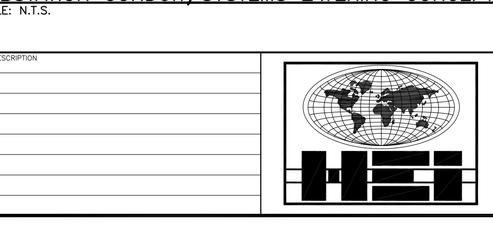

SUBSTATION CONDUIT/SYSTEMS LAYERING CONCEPT 4 [TD-E-003]

SCALE: N.T.S.

KEY NOTES:

1. COORDINATE WITH ARCHITECTURAL TO MOUNT BACK OF COVERPLATE FLUSH TO WALL FACE AND MAKE ALL FINAL CONNECTIONS.
2. PROPOSED CONDUIT/WIRE AND RELATED HARDWARE CONNECTING TO THE DEVICE ENCLOSURE AND ITEMS CONTAINED INSIDE OF THE ENCLOSURE ARE NOT SHOWN HERE FOR CLARITY. CLOSELY AND CAREFULLY COORDINATE LOCATION OF DEVICE ENCLOSURE IN WALL WITH ROUTE OF PROPOSED INTERCONNECT CONDUIT/WIRE AND WITH DEVICE ENCLOSURE MOUNTING COVER/EXTENSION REQUIREMENTS AND MAKE ALL FINAL CONNECTIONS.
3. COORDINATE LOCATION TO AVOID REINFORCED CMU CELLS. WHERE ADDITIONAL BOX DEPTH IS NEEDED BEYOND THE MINIMUM BOX DEPTH REQUIRED BY THE SPECIFICATIONS, IT IS PREFERRED TO INCREASE THE BOX DEPTH BEYOND THE MINIMUM REQUIRED BY THE SPECIFICATIONS IN LIEU OF INSTALLING BOX EXTENSION RINGS.
4. GROUND PRONGS SHALL BE ORIENTED VERTICALLY (AS SHOWN HERE), OR TO THE RIGHT FOR HORIZONTAL CONFIGURATION.
5. EXPOSED CONDUIT SYSTEM SHALL TRANSITION TO PVC CONDUIT AND PENETRATE THE CMU WALL AT AN ELEVATION RANGING BETWEEN THE BOTTOM OF THE CMU BOND BEAM AND 13'-0" ABOVE FINISHED FLOOR. CONTRACTOR SHALL COORDINATE THE ROUTE OF THE PROPOSED CONDUIT SYSTEM WITH THE STRUCTURE. THE PROPOSED CONDUIT SYSTEM IN ITS ENTIRETY SHALL NOT PENETRATE STRUCTURAL BEAMS.
6. ATTACH/SUPPORT/RACK THE PROPOSED CONDUIT/WIRE SYSTEM TO THE PROPOSED STRUCTURAL CEILING JOIST SYSTEM ACCORDING TO CONDUIT/WIRE RACKING DETAILS SHOWN ON DRAWING NO. [TD-E-004]. NOT ALL REQUIRED PROPOSED CONDUIT/WIRE RACKING IS SHOWN HERE FOR CLARITY.
7. COORDINATE THE PENETRATION POINT/INTERFACE OF THE PROPOSED CONDUIT/WIRE SYSTEM WITH THE PROPOSED CMU WALL. PRECISELY CHIP/ALTER THE CMU BLOCK TO ALLOW FOR PROPOSED CONDUIT/WIRE PENETRATION WITHOUT COMPROMISING THE STRUCTURAL INTEGRITY OF THE STRUCTURAL WALL. THOROUGHLY FILL AND PACK THE ANNULAR SPACE AROUND THE PROPOSED CONDUIT/WIRE CMU PENETRATION INTERFACE WITH 50 YEAR WATER-TIGHT NON-SHRINK GROUT. FINISH INTERFACE AREA TO MATCH CMU WALL UPON INSTALLATION OF PROPOSED CONDUIT/WIRE SYSTEM. NO MORE THAN ONE (1) CONDUIT/WIRE PENETRATION PER ENTIRE CMU BLOCK SHALL BE PERMITTED.
8. THESE ARE SUGGESTED LAYERS WITH MEASUREMENTS ALLOCATED FOR CONDUITS AND OTHER SYSTEMS. THERE MAY BE SITUATIONS WHERE CONDUIT INTRUDES INTO OTHER LAYERS IF NECESSARY.
9. FOR SUPPORT OF CONDUITS, REFER TO CONDUIT SUPPORT DETAILS ON DRAWING NO. [TD-E-004].
10. BEGIN THE INSTALLATION OF THE UPPER MOST LAYER OF CONDUITS IMMEDIATELY ADJACENT TO THE BOTTOM OF THE CONDUIT SUPPORT CHANNEL, MOUNTED DIRECTLY BENEATH THE STRUCTURAL CEILING, ATTACHED BELOW THE BOTTOM CORD OF THE ROOF TRUSS/BEAM. REFER TO APPLICABLE STRUCTURAL DETAILS FOR MORE INFORMATION.
11. PROPOSED CONDUIT CONTINUES. REFER TO PLANS.
12. PROPOSED PVC CONDUIT/WIRE CONTINUES INSIDE SPACE WITHIN EMPTY CELL OF CONCRETE MASONRY UNIT (CMU) WALL TO/FROM RECEPTACLE ENCLOSURE, WALL SWITCH ENCLOSURE, ETC., AS APPLICABLE. ALSO REFER TO "DEVICE ENCLOSURE RECESSED IN CONCRETE MASONRY UNIT WALL INSTALLATION DETAIL", DETAIL 2, ON THIS DRAWING FOR ADDITIONAL INFORMATION/DETAIL REGARDING ROUTING OF PROPOSED CONDUIT AND LOCATION OF OUTLET BOX/WALL SWITCH ENCLOSURE, ETC.
13. EXPOSED METAL CONDUIT TO PVC CONDUIT TRANSITION. CONDUITS ROUTED IN CONCRETE/CMU WALLS SHALL BE PVC. CONDUITS ROUTED EXPOSED SHALL BE RIGID METAL PER ELECTRICAL SPECIFICATIONS. REFER TO ELECTRICAL SPECIFICATIONS.
14. FURNISH AND INSTALL PVC SWEEP TO CONNECT EXPOSED CONDUIT SYSTEM WITH CONDUIT SYSTEM EMBEDDED IN CMU WALL. CLOSELY COORDINATE ENTRANCE/JUNCTION/INTERFACE OF EXPOSED CONDUIT SYSTEM WITH CMU WALL EMBEDDED CONDUIT SYSTEM AND ALSO WITH THE CIVIL/STRUCTURAL/MECHANICAL/ARCHITECTURAL DRAWINGS.
15. THE HVAC DUCT WORK AND DIFFUSERS HEIGHT MEASUREMENTS SHOWN ARE APPLICABLE FOR THE MAJORITY OF THE DUCTWORK EXCEPT WHERE SHOWN OTHERWISE ON THE HVAC DRAWINGS. REFER TO THE HVAC DRAWINGS FOR CASES NEAR THE AIR CONDITIONING UNITS WHERE THE TOP OF THE HVAC DUCTWORK MAY BE HIGHER THAN THE MEASUREMENTS SHOWN.

BAR LENGTH ON ORIGINAL DRAWING EQUALS ONE INCH, ADJUST SCALE ACCORDINGLY.

REUSE OF DOCUMENTS

This document, and the designs incorporated herein, is an instrument of professional service that has been developed, designed and prepared by Harutunian Engineering, Inc., and is not to be used, in whole or in part, for any other project without giving written notice to Harutunian Engineering, Inc.

NO.	DATE:	DESCRIPTION

HARUTUNIAN ENGINEERING INCORPORATED
TEXAS FIRM REGISTRATION NUMBER F-2408
ENGINEERING AND ENVIRONMENTAL CONSULTANTS
8100 CROSS PARK DRIVE
AUSTIN, TEXAS 78754

STATE OF TEXAS · SHANT HARUTUNIAN · 87735 · REGISTERED PROFESSIONAL ENGINEER
10/7/2019

DESIGNED BY:	HEI
CHECKED BY:	HEI
APPROVED BY:	HEI
SUBMITTAL DATE:	OCTOBER 2019
SCALE:	AS SHOWN

SOUTH AUSTIN REGIONAL WASTEWATER TREATMENT PLANT
ELECTRICAL SUBSTATION NO. 1 REPLACEMENT PROJECT
CIP I.D.# 3333.032

ELECTRICAL STANDARD DETAILS III

PROJECT NO: 2014-300 | SHT. 807 OF 866 | DWG NO. TD-E-003

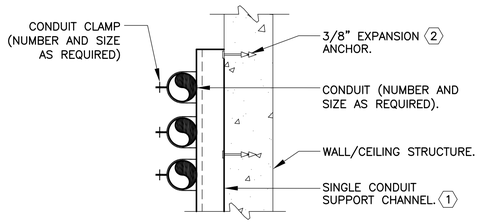

WALL/CEILING/FLOOR CONDUIT SUPPORT DETAIL 1
SCALE: N.T.S. [TD-E-004]

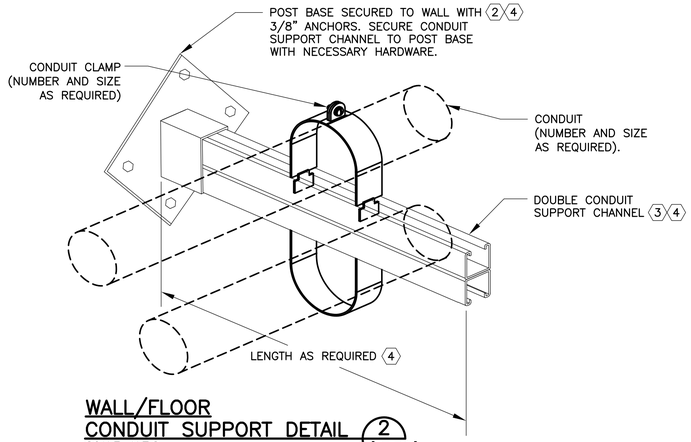

WALL/FLOOR CONDUIT SUPPORT DETAIL 2
SCALE: N.T.S. [TD-E-004]

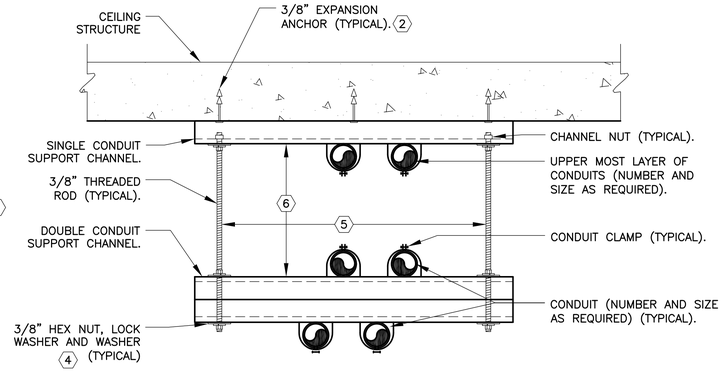

CONDUIT SUPPORT CEILING DETAIL 3
SCALE: N.T.S. [TD-E-004]

KEY NOTES:

1. SINGLE CONDUIT SUPPORT CHANNEL. THE LENGTH OF CHANNEL SHALL BE AS REQUIRED.
2. THE STRUCTURE TYPE TO WHICH EQUIPMENT AND/OR SUPPORT SYSTEMS SHALL BE MOUNTED MAY VARY. THE EQUIPMENT ANCHOR TYPE SHALL CORRESPOND TO THE TYPE OF STRUCTURE TO WHICH EQUIPMENT AND/OR SUPPORT SYSTEMS ARE ATTACHED. THE DRAWING REFLECTS A SPECIFIC STRUCTURE TYPE WITH CORRESPONDING ANCHOR TYPE AND IS TYPICAL FOR STRUCTURE TYPE SHOWN. TO ATTACH EQUIPMENT/SUPPORT SYSTEMS TO PRE-CAST/CAST-IN-PLACE CONCRETE WALL/FLOOR SLAB STRUCTURE TYPES, FURNISH AND INSTALL BOLT WITH EXPANSION ANCHOR. TO ATTACH EQUIPMENT/SUPPORT SYSTEMS TO CONCRETE MASONRY UNIT (CMU)/BRICK WALL STRUCTURE TYPE, FURNISH AND INSTALL BOLT WITH EXPANSION ANCHOR. TO ATTACH EQUIPMENT/SUPPORT SYSTEMS TO STEEL STRUCTURE TYPE, FURNISH AND INSTALL BOLTING ASSEMBLY. COORDINATE ATTACHMENT REQUIREMENTS WITH STRUCTURAL/ARCHITECTURAL/METAL BUILDING SYSTEM MANUFACTURER AS APPLICABLE.
3. THE LENGTH OF CHANNEL SHALL BE AS REQUIRED.
4. COORDINATE/CALCULATE TOTAL WEIGHT LOAD OF CONDUIT/WIRE/CABLES/ETC. AT EACH LOCATION OF SUPPORT. FURNISH AND INSTALL ADDITIONAL SUPPORT AS NECESSARY AT EACH LOCATION, IN ORDER TO MAINTAIN A MAXIMUM OF 50 PERCENT OF MANUFACTURER'S STATED WEIGHT SUPPORT CAPACITY.
5. MAINTAIN MAXIMUM DISTANCE BETWEEN ADJACENT THREADED SUPPORT RODS OF 4'-0".
6. COORDINATE SUPPORT ROD LENGTH (AND CORRESPONDING CONDUIT/WIRE SUPPORT/RACK ELEVATION) WITH PLANS. SUPPORT ROD LENGTH MAY VARY.
7. SECURE/ATTACH CONDUIT SUPPORT CHANNEL TO BOTTOM CHORD OF CEILING JOIST.

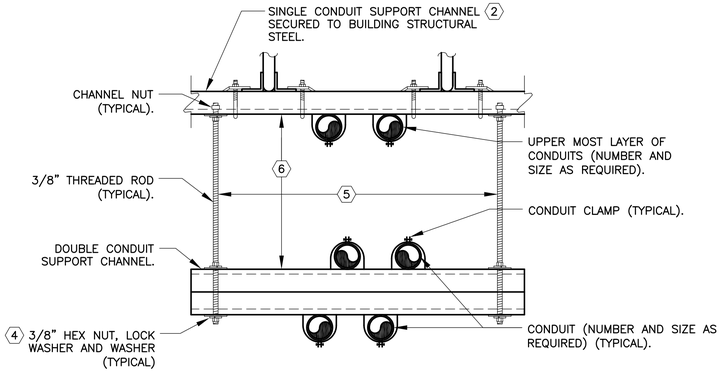

CONDUIT SUPPORT CEILING DETAIL 4
SCALE: N.T.S. [TD-E-004]

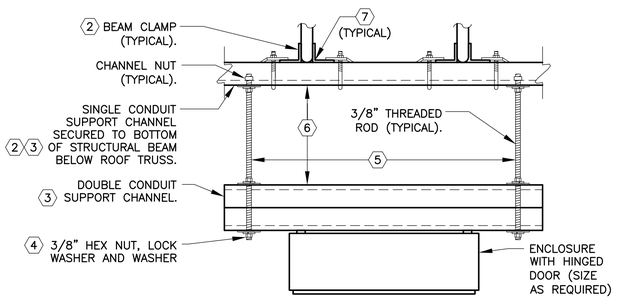

CEILING ENCLOSURE SUPPORT DETAIL 5
SCALE: N.T.S. [TD-E-004]

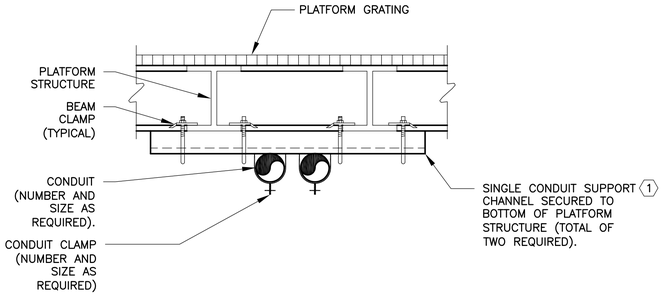

CEILING/WALL CONDUIT MOUNTING TO PLATFORM STRUCTURE DETAIL 6
SCALE: N.T.S. [TD-E-004]

BAR LENGTH ON ORIGINAL DRAWING EQUALS ONE INCH, ADJUST SCALE ACCORDINGLY.

REUSE OF DOCUMENTS

This document, and the designs incorporated herein, is an instrument of professional service that has been developed, designed and prepared by Harutunian Engineering, Inc., and is not to be used, in whole or in part, for any other project without giving written notice to Harutunian Engineering, Inc.

NO.	DATE:	DESCRIPTION

HARUTUNIAN ENGINEERING INCORPORATED
TEXAS FIRM REGISTRATION NUMBER F-2408
ENGINEERING AND ENVIRONMENTAL CONSULTANTS
8100 CROSS PARK DRIVE
AUSTIN, TEXAS 78754

STATE OF TEXAS · SHANT HARUTUNIAN · 87735 · REGISTERED PROFESSIONAL ENGINEER · 10/7/2019

DESIGNED BY:	HEI
CHECKED BY:	HEI
APPROVED BY:	HEI
SUBMITTAL DATE:	OCTOBER 2019
SCALE:	AS SHOWN

SOUTH AUSTIN REGIONAL WASTEWATER TREATMENT PLANT
ELECTRICAL SUBSTATION NO. 1 REPLACEMENT PROJECT
CIP I.D.# 3333.032

ELECTRICAL STANDARD DETAILS IV

PROJECT NO: 2014-300 | SHT. 808 OF 866 | DWG NO. TD-E-004

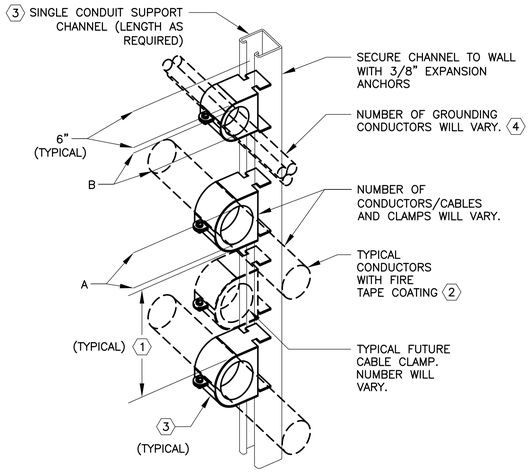

WALL MOUNTED MANHOLE OR HANDHOLE CABLE RACK DETAIL 1 [5] [TD-E-005]

SCALE: N.T.S.

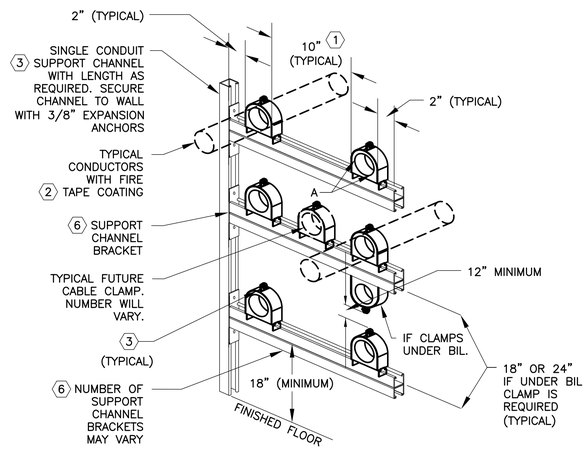

WALL MOUNTED MANHOLE CABLE RACK DETAIL 2 [5] [TD-E-005]

SCALE: N.T.S.

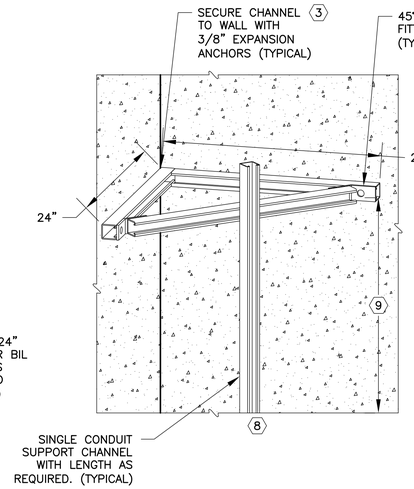

CORNER MOUNTED CABLE RACK DETAIL 7 [5] [23] [TD-E-005]

SCALE: N.T.S.

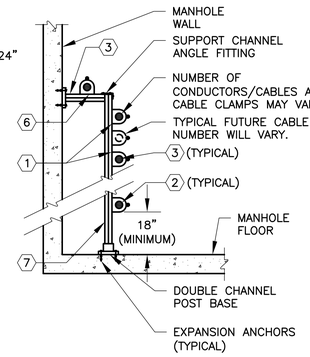

MANHOLE 15kV CONDUCTOR/CABLE RACK DETAIL 3 [5] [TD-E-005]

SCALE: N.T.S.

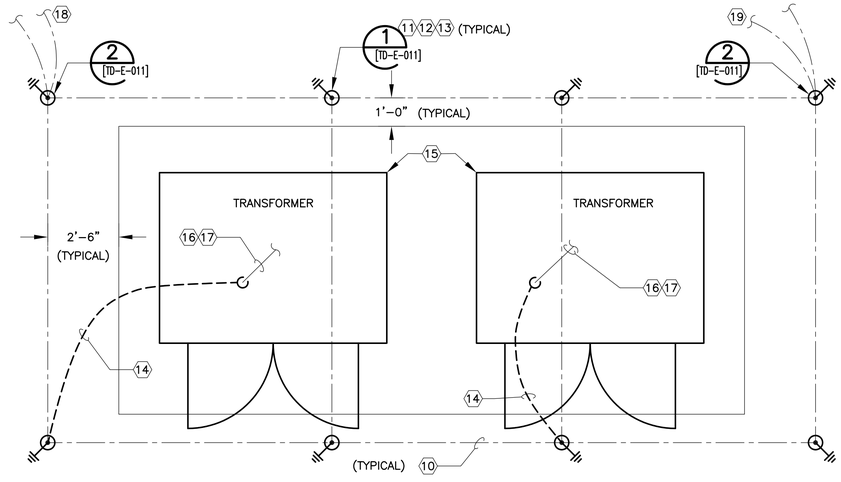

TRANSFORMER GROUNDING DETAIL 5 [5] [TD-E-005]

SCALE: N.T.S.

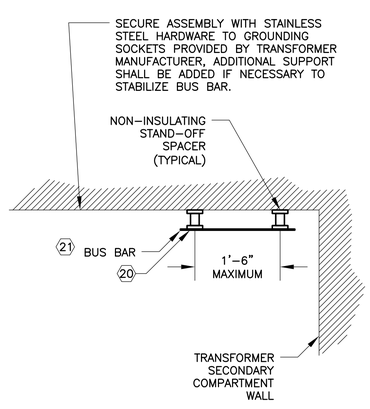

TRANSFORMER GROUND BUS BAR ASSEMBLY 6 [5] [TD-E-005]

SCALE: N.T.S.

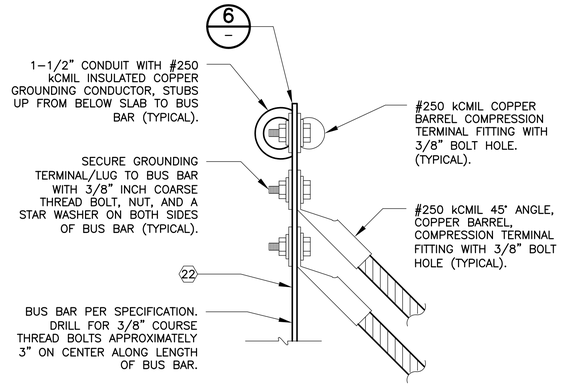

TRANSFORMER BUS BAR GROUNDING CONDUCTOR(S) TERMINATION DETAIL 4 [5] [TD-E-005]

SCALE: N.T.S.

KEY NOTES:

1. PROVIDE A MINIMUM OF 10" SPACE BETWEEN CABLE CLAMPS FOR INSTALLATION OF FUTURE 15kV CABLE CLAMP.
2. FOR 15kV CONDUCTOR INSTALLATION, FASTEN WITH PORCELAIN CABLE CLAMP WITH DIMENSION "A" SUITABLE FOR (3) 15kV SHIELDED CONDUCTORS AND (1) 600V INSULATED GROUND CONDUCTOR GROUPED TOGETHER AND WRAPPED WITH FIRE TAPE COATING. REFER TO THE APPROPRIATE CONDUIT/WIRE SCHEDULE FOR CONDUCTOR SIZE.
3. REFER TO THE DETAILS ON DRAWING NO. [TD-E-013] FOR SUPPORT CHANNEL AND CABLE CLAMP GROUNDING METHODS.
4. FOR GROUNDING CONDUCTORS, FASTEN WITH PORCELAIN CABLE CLAMP WITH DIMENSION "B" SUITABLE FOR (3) BARE #250 kCMIL GROUNDING CONDUCTORS AND (4) BARE #6 AWG GROUNDING CONDUCTORS.
5. CALCULATE TOTAL WEIGHT LOAD OF CONDUIT/WIRE/CABLES/ETC. AT EACH LOCATION OF SUPPORT. FURNISH AND INSTALL ADDITIONAL SUPPORT AS NECESSARY, IN ORDER TO MAINTAIN A MAXIMUM OF 50 PERCENT OF MANUFACTURERS STATED WEIGHT SUPPORT CAPACITY.
6. SUPPORT CHANNEL BRACKET IS OF 12GA CONSTRUCTION FOR A MINIMUM UNIFORM DESIGN LOAD OF 300 LBS.
7. DOUBLE CONDUIT SUPPORT CHANNEL. THE LENGTH OF CHANNEL SHALL BE AS REQUIRED.
8. SUPPORT EXTENDS TO FINISHED FLOOR AND IS SECURED VIA A POST BASE.
9. SPACE HORIZONTAL SUPPORTS EVERY 36", WITH A MINIMUM OF TWO PER RACK.
10. #250 kCMIL BARE COPPER GROUNDING CONDUCTOR. MINIMUM BURIAL DEPTH IS 30" BELOW FINISHED GRADE. THIS IS TYPICAL BETWEEN ALL GROUND PLATES AND THROUGHOUT THE GROUNDING SYSTEM.
11. COPPER GROUND PLATE. MINIMUM BURIAL DEPTH OF TOP OF PLATE SHALL BE 30" BELOW FINISHED GRADE. REFER TO "TYPICAL GROUND PLATE INSTALLATION DETAIL" ON DRAWING NO. [TD-E-011].
12. ALL CONNECTIONS OF GROUNDING CONDUCTORS TO GROUND PLATES TO BE BY EXOTHERMIC WELD.
13. THE SPACING OF GROUND PLATES AROUND PAD IS APPROXIMATE AND MAY BE ADJUSTED TO FIT THE NUMBER OF PLATES SHOWN. MINIMUM SEPARATION OF PLATES SHALL BE 10'-0" CENTER TO CENTER, MAXIMUM SEPARATION TO BE 15'-0" CENTER TO CENTER.
14. #250 kCMIL INSULATED COPPER GROUNDING CONDUCTOR IN 1-1/2" PVC CONDUIT. BURY BELOW SLAB AT MINIMUM OF 30" FROM TOP SURFACE.
15. THE ACTUAL REQUIRED SIZE OF THE CONDUIT ENTRANCE AREAS IS TO BE DETERMINED BY THE TRANSFORMER MANUFACTURER. THE ACTUAL EQUIPMENT SIZE MAY VARY. THE LOCATION AND SIZE OF THE TRANSFORMER CONDUIT ENTRANCE AREAS SHALL BE COORDINATED WITH THE CONCRETE FOUNDATION PLANS OF THE TRANSFORMER EQUIPMENT PAD. REFER TO THE APPLICABLE CIVIL/STRUCTURAL/MECHANICAL/ELECTRICAL, ETC. DRAWINGS.
16. FURNISH AND INSTALL GROUNDING BUS BAR ACCORDING TO DETAIL SIX ON THIS DRAWING WITHIN TRANSFORMER SECONDARY COMPARTMENT. BOND TRANSFORMER NEUTRAL TO GROUNDING BUS BAR. BOND GROUNDING BUS BAR TO TRANSFORMER GROUNDING SYSTEM.
17. BOND GROUNDING/BONDING CONDUCTORS TO/FROM GROUND BUS IN SERVICE EQUIPMENT TO GROUNDING BUS BAR INSTALLED IN TRANSFORMER SECONDARY COMPARTMENT. CONDUCTORS ROUTE IN FEEDER CONDUIT(S), REFER TO CONDUIT & WIRE SCHEDULE FOR ADDITIONAL INFORMATION.
18. PROPOSED CONDUIT/WIRE CONTINUES TO/FROM POINT ON PRIMARY-SIDE POWER DUCT BANK WHERE GROUNDING CONDUIT/WIRE BREAKS OUT OF DUCT BANK FOR TERMINATION AT TEST WELL. GROUNDING CONDUIT/WIRE INTERCONNECTS PROCESS AREA GROUNDING SYSTEM WITH PLANT GROUNDING SYSTEM. EXACT NUMBER OF CONDUITS/WIRES MAY VARY. REFER TO SITE PLAN.
19. PROPOSED CONDUIT/WIRE CONTINUES TO/FROM PROCESS AREA GROUNDING GRID. COORDINATE ROUTE WITH UNDERGROUND DUCT BANK/MECHANICAL PIPING/ETC., IN VICINITY. EXACT NUMBER OF CONDUITS/WIRES MAY VARY. REFER TO GROUNDING PLAN FOR PROCESS AREA.
20. DRILL FOR 3/8" COURSE THREAD BOLTS. SPACE AT APPROXIMATELY 3" ON CENTER ALONG LENGTH OF BUS BAR. SECURE ALL GROUND LUGS WITH BOLT, NUT, AND A STAR WASHER ON BOTH SIDES OF BUS BAR.
21. CONTRACTOR SHALL FURNISH AND INSTALL GROUND BUS BAR. GROUND BUS BAR LENGTH SHALL BE A MINIMUM OF 24".
22. MOUNTING HARDWARE AND INSULATORS NOT SHOWN FOR PURPOSES OF CLARITY.
23. PLEASE REFER TO DETAIL NO. 2 ON THIS DRAWING FOR CABLE SUPPORT AND CABLE MOUNTING.

BAR LENGTH ON ORIGINAL DRAWING EQUALS ONE INCH, ADJUST SCALE ACCORDINGLY.

REUSE OF DOCUMENTS

This document, and the designs incorporated herein, is an instrument of professional service that has been developed, designed and prepared by Harutunian Engineering, Inc., and is not to be used, in whole or in part, for any other project without giving written notice to Harutunian Engineering, Inc.

NO.	DATE:	DESCRIPTION

HARUTUNIAN ENGINEERING INCORPORATED
TEXAS FIRM REGISTRATION NUMBER F-2408
ENGINEERING AND ENVIRONMENTAL CONSULTANTS
8100 CROSS PARK DRIVE
AUSTIN, TEXAS 78754

STATE OF TEXAS · SHANT HARUTUNIAN · 87735 · REGISTERED · PROFESSIONAL ENGINEER
10/7/2019

DESIGNED BY:	HEI
CHECKED BY:	HEI
APPROVED BY:	HEI
SUBMITTAL DATE:	OCTOBER 2019
SCALE:	AS SHOWN

SOUTH AUSTIN REGIONAL WASTEWATER TREATMENT PLANT
ELECTRICAL SUBSTATION NO. 1 REPLACEMENT PROJECT
CIP I.D.# 3333.032

ELECTRICAL STANDARD DETAILS V

PROJECT NO: 2014-300 | SHT. 809 OF 866 | DWG NO. TD-E-005

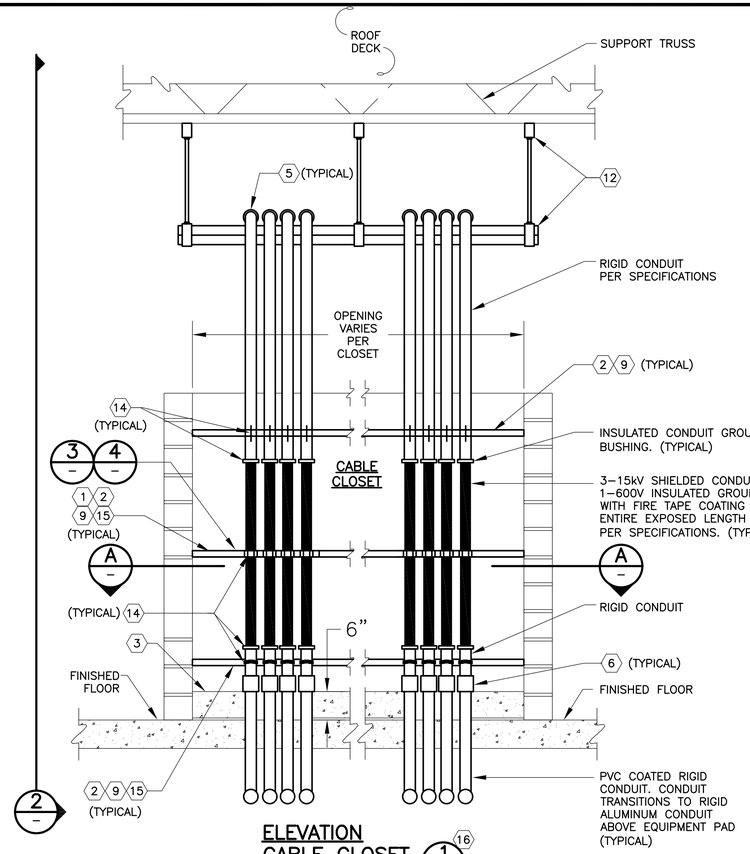

ELEVATION
CABLE CLOSET 1 (16) [TD-E-006]
SCALE: NTS

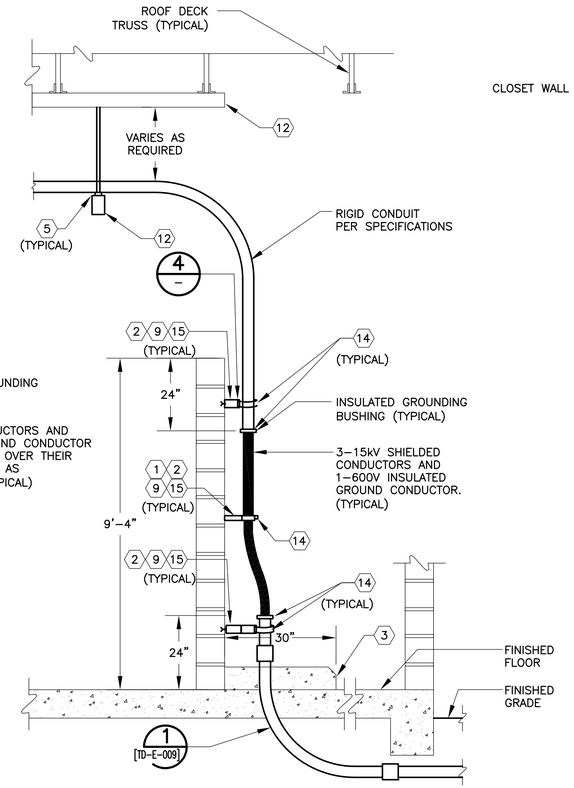

SECTION
CABLE CLOSET 2 (16) [TD-E-006]
SCALE: NTS

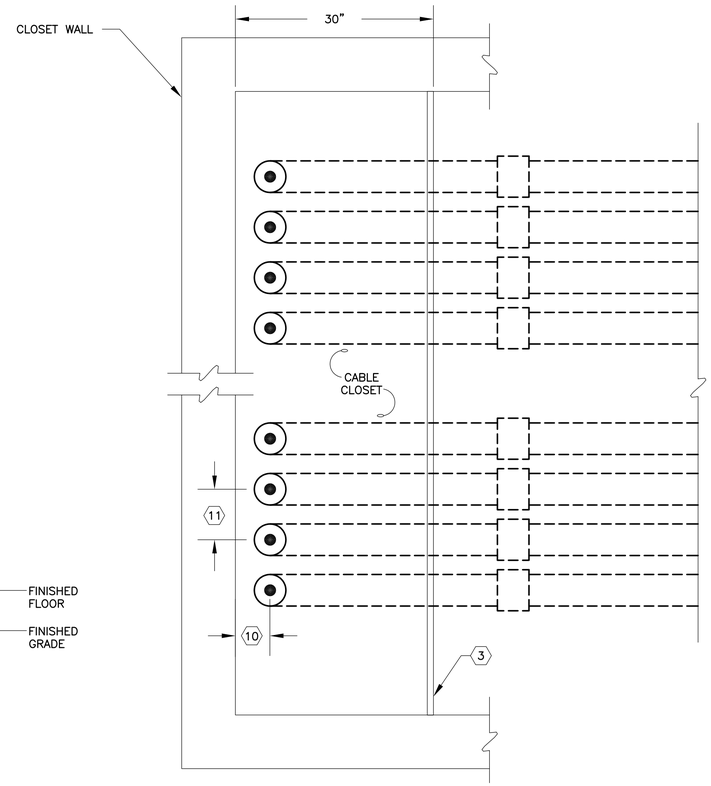

CABLE CLOSET
PARTIAL FLOOR PLAN A (16)
SCALE: NTS

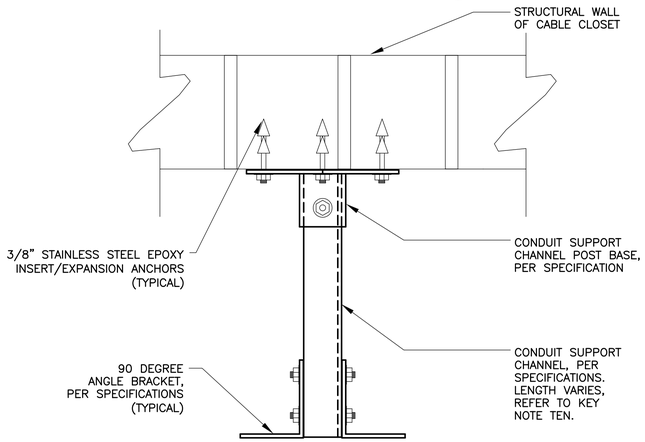

CABLE CLOSET RACK
STANDOFF/SUPPORT DETAIL 4 [TD-E-006]
SCALE: NTS

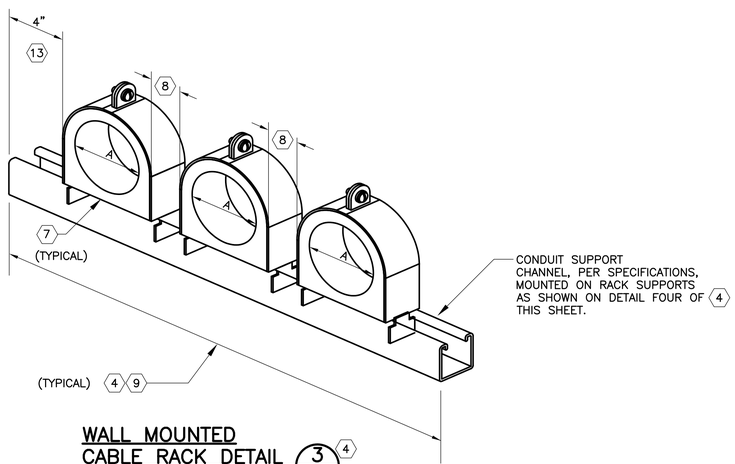

WALL MOUNTED
CABLE RACK DETAIL 3 (4) [TD-E-006]
SCALE: NTS

KEY NOTES:

1. REFER TO CABLE RACK DETAIL ON THIS SHEET.
2. MOUNT CONDUIT SUPPORT CHANNEL WITH CABLE RACK STANDOFF/SUPPORTS ANCHORED TO REAR STRUCTURAL WALL OF CLOSET THROUGHOUT ENTIRE WIDTH OF CLOSET. MAXIMUM OF 4'–0" BETWEEN STANDOFF/SUPPORTS.
3. FURNISH AND INSTALL INDOOR EQUIPMENT PAD PER THE DETAIL 4 ON DRAWING NO. [TD–E–010]. PAD TO EXTEND OUTWARD HORIZONTALLY 30" FROM SURFACE OF REAR STRUCTURAL CLOSET WALL AND ENTIRE WIDTH OF CABLE CLOSET.
4. CABLE RACK DETAIL SHOWN IN IMPROPER ORIENTATION FOR PURPOSES OF CLARITY. IN ACTUAL ORIENTATION, CABLE STRAPS ARE IN HORIZONTAL POSITION AS SHOWN IN DETAIL NO.'S 1 AND 2 ON THIS SHEET.
5. SECURE CONDUITS TO CONDUIT SUPPORT RACKS PER THE DETAILS ON DRAWING NO. [TD–E–004].
6. REFER TO CONDUIT TURN PER DETAIL 1 ON DRAWING NO. [TD–E–009].
7. INSTALL PORCELAIN CABLE CLAMP WITH "A" DIMENSION SUITABLE FOR 3–15kV SHIELDED CONDUCTORS AND 1–600V INSULATED GROUND CONDUCTOR WITH FIRE TAPE COATING AS PER SPECIFICATIONS. REFER TO THE APPROPRIATE CONDUIT/WIRE SCHEDULE FOR CONDUCTOR SIZE. THE NUMBER OF CABLE CLAMPS WILL BE AS REQUIRED.
8. DISTANCE BETWEEN CONDUITS VARIES. REFER TO KEYNOTE ELEVEN.
9. CABLE/CONDUIT RACKS TO EXTEND ENTIRE LENGTH OF CLOSET.
10. DISTANCE FROM SURFACE OF REAR STRUCTURAL CLOSET WALL TO CENTER OF CONDUIT STUB–UPS SHALL BE 16–1/2" FOR 5" CONDUITS, AND 19" TO CENTER FOR 6" CONDUITS (TYPICAL).
11. SEPARATION DISTANCE OF CONDUITS SHALL BE 14" CENTER TO CENTER FOR 5" CONDUITS, AND 16" CENTER TO CENTER FOR 6" CONDUITS (TYPICAL).
12. CONDUIT SUPPORT RACK. CONSTRUCT PER THE DETAILS ON DRAWING NO. [TD–E–004].
13. MAINTAIN A MINIMUM OF 4" TO THE EDGE OF THE FIRST CABLE/CONDUIT CLAMP AT EACH END OF ALL RACKS.
14. 1–BARE #6 AWG GROUND CONDUCTOR WITH DAISY CHAINED CONNECTIONS AND THE FOLLOWING PATH: TO/FROM CABLE CLOSET GROUNDING BUS BAR, THEN TO/FROM CONDUIT STRAP AT CONDUIT STUB–UP, THEN TO/FROM CONDUIT GROUNDING BUSHING AT STUB–UP, THEN TO/FROM CABLE STRAP AT CABLE RACK, THEN TO/FROM GROUNDING BUSHING OF CONDUIT EXITING CABLE CLOSET, THEN ENDING AT CONDUIT STRAP OR STRAPS INSIDE CABLE CLOSET. EACH INDIVIDUAL CONDUIT/CABLE/CONDUIT ROUTE SHALL HAVE A SEPARATE AND DEDICATED GROUND CONDUCTOR. EACH GROUND CONNECTION/TERMINATION SHALL BE MADE WITH A COPPER BARREL COMPRESSION TERMINAL/LUG FITTING PER SPECIFICATIONS.
15. 1–#6 AWG BARE GROUND CONDUCTOR WITH DAISY CHAINED CONNECTIONS TO/FROM EACH OF THE CABLE CLOSET SUPPORT RACKS, THEN TO/FROM ONE OF THE CABLE CLOSET GROUNDING BUS BARS. MAKE CONNECTION/TERMINATION AT SUPPORT RACKS AS SHOWN ON DRAWING NO. [TD–E–013].
16. NOT ALL CABLE CLOSET EQUIPMENT SHOWN, FOR PURPOSES OF CLARITY.

BAR LENGTH ON ORIGINAL DRAWING EQUALS ONE INCH, ADJUST SCALE ACCORDINGLY.

REUSE OF DOCUMENTS

This document, and the designs incorporated herein, is an instrument of professional service that has been developed, designed and prepared by Harutunian Engineering, Inc., and is not to be used, in whole or in part, for any other project without giving written notice to Harutunian Engineering, Inc.

NO.	DATE:	DESCRIPTION

HARUTUNIAN ENGINEERING INCORPORATED
TEXAS FIRM REGISTRATION NUMBER F–2408
ENGINEERING AND ENVIRONMENTAL CONSULTANTS
8100 CROSS PARK DRIVE
AUSTIN, TEXAS 78754

STATE OF TEXAS · SHANT HARUTUNIAN · 87735 · REGISTERED PROFESSIONAL ENGINEER · 10/7/2019

DESIGNED BY:	HEI
CHECKED BY:	HEI
APPROVED BY:	HEI
SUBMITTAL DATE:	OCTOBER 2019
SCALE:	AS SHOWN

SOUTH AUSTIN REGIONAL WASTEWATER TREATMENT PLANT
ELECTRICAL SUBSTATION NO. 1 REPLACEMENT PROJECT
CIP I.D.# 3333.032

ELECTRICAL STANDARD DETAILS VI

PROJECT NO: 2014–300 | SHT. 810 OF 866 | DWG NO. TD–E–006

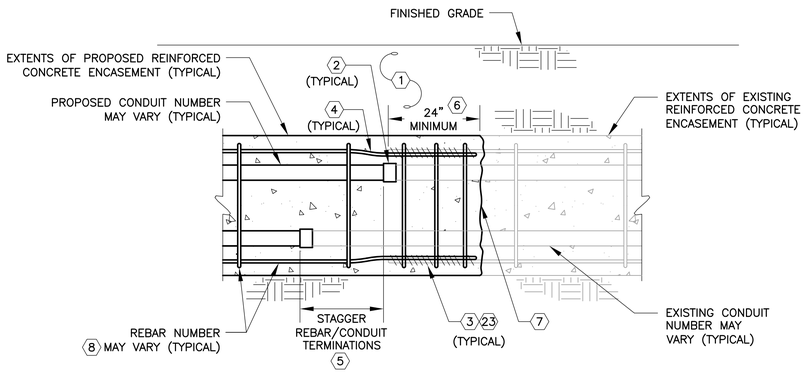

CONNECTION TO EXISTING PVC CONDUIT

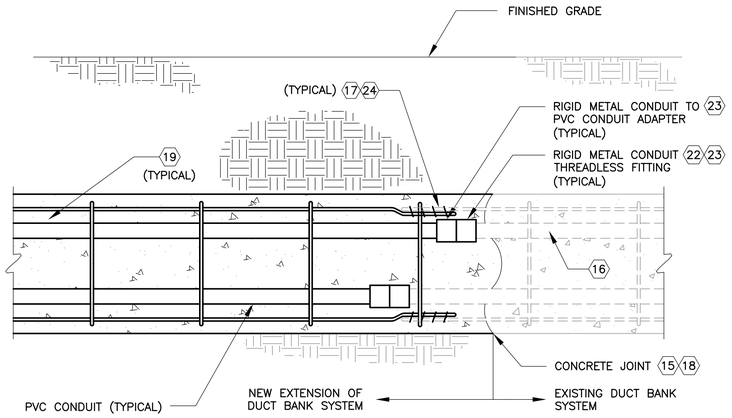

CONNECTION TO EXISTING RIGID METAL CONDUIT

INTERCONNECTION OF PROPOSED DUCT BANK WITH EXISTING DUCT BANK INSTALLATION DETAIL 1 [TD-E-007]

SCALE: N.T.S.

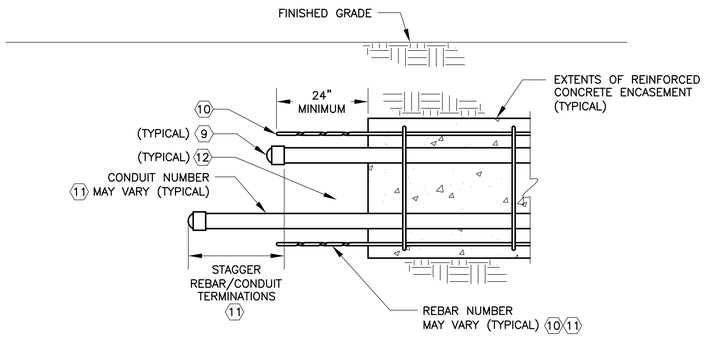

DETAIL OF DUCTBANK STUB-OUT TERMINATION 2 [TD-E-007]

SCALE: N.T.S.

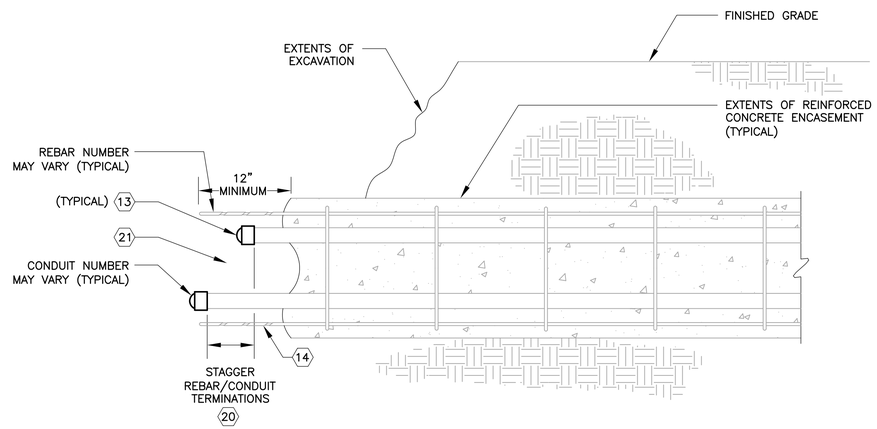

TYPICAL DETAIL OF EXISTING DUCT BANK TERMINATION 3 [TD-E-007]

SCALE: N.T.S.

KEY NOTES:

1. HAND EXCAVATE IN VICINITY OF EXISTING DUCT BANK TO AVOID DAMAGE TO EXISTING DUCT BANK CONDUITS, REBAR, ETC. FIELD VERIFY EXISTING DUCT BANK LOCATION.
2. REMOVE CONDUIT CAP FROM EXISTING CONDUIT. FURNISH AND INSTALL COUPLING.
3. REMOVE PIPE TAPE FROM EXISTING REBAR. TIE PROPOSED REBAR TO EXISTING REBAR ALONG OVERLAP LENGTH.
4. BEND PROPOSED REBAR AND OVERLAP EXISTING REBAR A MINIMUM OF 24 INCHES.
5. STAGGER CONDUIT END POINTS. REFER TO PROPOSED DUCT BANK INSTALLATION DETAIL FOR SEPARATION DISTANCE.
6. FURNISH AND INSTALL A MINIMUM OF THREE EVENLY SPACED STIRRUPS IN THIS REGION. STIRRUP SHALL BE NO LESS THAN 3" FROM THE CONCRETE EDGE. REFER TO PROPOSED DUCT BANK INSTALLATION DETAIL FOR PROPOSED STIRRUP SIZE.
7. CLEAN SURFACE OF EXISTING DUCT BANK BY HAND AND COAT WITH EPOXY RESIN/PORTLAND CEMENT BONDING AGENT. APPLICABLE TO ENTIRE WIDTH AND DEPTH OF DUCT BANK.
8. REFER TO PROPOSED DUCT BANK INSTALLATION DETAIL FOR PROPOSED REBAR REQUIREMENTS.
9. AFTER CONDUITS ARE BRUSHED AND WIPED OUT, GLUE CONDUIT CAP TO ENDS OF CONDUITS TO PREVENT ENTRY OF MOISTURE. PRIOR TO INSTALLING CONDUIT CAP, FURNISH AND INSTALL A PULL STRING INSIDE AND ALONG THE ENTIRE LENGTH OF EACH CONDUIT FOR FUTURE USE. SECURELY TAPE PULL STRING AROUND INTERIOR OF CONDUIT AT CONDUITS TERMINATION POINT.
10. THOROUGHLY CLEAN AND DRY EXPOSED REBAR AROUND ITS CIRCUMFERENCE AND ALONG ITS LENGTH. TIGHTLY WRAP REBAR WITH TWO LAYERS AT HALF LAP WITH SCOTCH #33 TAPE (OR APPROVED EQUAL) TO PREVENT CORROSION.
11. CUT AND STAGGER ALL EXISTING CONDUITS AND REBAR END POINTS.
12. CONTRACTOR SHALL BACKFILL REGION IN, ABOUT, AND AROUND EACH EXPOSED CONDUIT/REBAR EXTENDING BEYOND THE EDGE OF THE EXISTING REINFORCED CONCRETE ENCASEMENT BY HAND.
13. AFTER CONDUITS ARE BRUSHED AND WIPED OUT, GLUE CONDUIT CAP TO ENDS OF CONDUITS TO PREVENT ENTRY OF MOISTURE. PRIOR TO INSTALLING CONDUIT CAP, FURNISH AND INSTALL A PULL STRING INSIDE AND ALONG THE ENTIRE LENGTH OF EACH CONDUIT FOR FUTURE USE. SECURELY TAPE PULL STRING AROUND INTERIOR OF CONDUIT AT CONDUITS TERMINATION POINT.
14. THOROUGHLY CLEAN AND DRY EXPOSED REBAR AROUND ITS CIRCUMFERENCE AND ALONG ITS LENGTH. TIGHTLY WRAP REBAR WITH TWO LAYERS AT HALF LAP WITH SCOTCH #33 TAPE (OR APPROVED EQUAL) TO PREVENT CORROSION.
15. UPON CUTTING INTO THE EXISTING DUCT BANK CAREFULLY CHIP BACK THE CONCRETE EXPOSING A MINIMUM OF 48" OF CONDUITS AND REBARS. CLEAN ALL EXPOSED CONDUITS, REBARS AND EXPOSED CONCRETE SURFACE OF DEBRIS AND DIRT. CUT OFF ENDS OF EXPOSED CONDUITS IN A STAGGERED MANNER AND PREPARE ENDS FOR COUPLING.
16. EXISTING CONDUITS SHALL BE CLEANED OUT OF DEBRIS.
17. SHOULD REBAR EXIST IN EXISTING DUCT BANK LAP OVER REBARS (NEW OVER EXISTING AT A MINIMUM OF 15 DIAMETERS OF LARGEST REBAR) AND FIRMLY TIE THE REBARS TOGETHER.
18. EXTEND NEW CONCRETE POUR TO END OF POUR OF EXISTING DUCT BANK POUR (ONLY AFTER CLEANING DIRT THOROUGHLY FROM EXISTING CONCRETE SURFACE). CONTRACTOR SHALL FIELD VERIFY LOCATION OF EXISTING DUCT BANK SYSTEM PRIOR TO COMMENCING PROPOSED DUCT BANK SYSTEM INSTALLATION/DEMOLITION ACTIVITIES. CONTRACTOR SHALL CLOSELY AND CAREFULLY COORDINATE ROUTE OF PROPOSED DUCT BANK SYSTEM WITH THE LOCATION OF EXISTING DUCT BANK SYSTEM TO INSURE SUCCESSFUL ALIGNMENT OF THE PROPOSED AND EXISTING DUCT BANK SYSTEMS AND THE STRUCTURAL INTEGRITY OF THE PROPOSED AND EXISTING DUCT BANK INTERFACE JOINT/UNION.
19. ALL CONDUITS INCLUDING CONDUIT FOR GROUND CONDUCTOR WILL BE EXTENDED TO DESTINATION. LENGTHS THEREOF WILL BE STAGGERED ACCORDING TO SPECIFICATIONS.
20. CUT AND STAGGER ALL EXISTING CONDUITS AND REBAR END POINTS.
21. CONTRACTOR SHALL BACKFILL REGION IN, ABOUT, AND AROUND EACH EXPOSED CONDUIT/REBAR EXTENDING BEYOND THE EDGE OF THE EXISTING REINFORCED CONCRETE ENCASEMENT BY HAND.
22. CONTRACTOR SHALL FILE/REAM CUT END OF EXISTING RIGID METAL CONDUIT AND SHALL FURNISH AND INSTALL RIGID METAL CONDUIT THREADLESS COMPRESSION TYPE FITTING FOR ADAPTATION TO PROPOSED PVC CONDUIT. SHOULD EXISTING CONDUIT SPACING PROHIBIT THE USE OF COMPRESSION TYPE THREADLESS FITTING, SET-SCREW TYPE THREADLESS FITTING MAY BE USED INSTEAD. THREADLESS FITTING SHALL HAVE MALE THREAD FOR CONNECTION TO PVC CONDUIT ADAPTOR AND SHALL BE CONSTRUCTED OF A MALLEABLE IRON BODY. THREADLESS TYPE FITTING SHALL BE CONCRETE-TIGHT FITTING AS MANUFACTURED BY THOMAS & BETTS, OR APPROVED EQUAL.
23. PRIOR TO INSTALLATION OF DUCT BANK CONCRETE ENCASEMENT, WRAP POINT WHERE THE CONDUIT TRANSITIONS FROM RIGID METAL CONDUIT TO PVC CONDUIT WITH 3M COMPANY NO. 50, 20 MIL PIPE TAPE USING A 50% OVERLAP THROUGHOUT THE ENTIRE DISTANCE/LENGTH OF THE TRANSITION AND AN ADDITIONAL 12-INCHES OF DISTANCE BEYOND EITHER SIDE OF THE TRANSITION. IN ADDITION TO APPLYING THE PIPE TAPE, APPLY TWO (2) COATS OF "KOPPER BITUMASTIC NO. 50" (OVER THE TAPE) TO THE CONDUIT TRANSITION.
24. SHOULD EXISTING DUCTBANK NOT BE STEEL REINFORCED, DOWEL ALL FOUR CORNERS A MINIMUM OF 6" DEEP AND SECURE PROPOSED STEEL WITH EPOXY.

GENERAL NOTES:

1. DARK LINEWORK DENOTES PROPOSED ITEMS. LIGHT LINEWORK DENOTES EITHER EXISTING OR FUTURE ITEMS UNLESS NOTED OTHERWISE.

BAR LENGTH ON ORIGINAL DRAWING EQUALS ONE INCH, ADJUST SCALE ACCORDINGLY.

REUSE OF DOCUMENTS

This document, and the designs incorporated herein, is an instrument of professional service that has been developed, designed and prepared by Harutunian Engineering, Inc., and is not to be used, in whole or in part, for any other project without giving written notice to Harutunian Engineering, Inc.

NO.	DATE:	DESCRIPTION

HARUTUNIAN ENGINEERING INCORPORATED
TEXAS FIRM REGISTRATION NUMBER F-2408
ENGINEERING AND ENVIRONMENTAL CONSULTANTS
8100 CROSS PARK DRIVE
AUSTIN, TEXAS 78754

STATE OF TEXAS · SHANT HARUTUNIAN · 87735 · REGISTERED PROFESSIONAL ENGINEER · 10/7/2019

DESIGNED BY:	HEI
CHECKED BY:	HEI
APPROVED BY:	HEI
SUBMITTAL DATE:	OCTOBER 2019
SCALE:	AS SHOWN

SOUTH AUSTIN REGIONAL WASTEWATER TREATMENT PLANT
ELECTRICAL SUBSTATION NO. 1 REPLACEMENT PROJECT
CIP I.D.# 3333.032

ELECTRICAL STANDARD DETAILS VII

PROJECT NO: 2014-300 | SHT. 811 OF 866 | DWG NO. TD-E-007

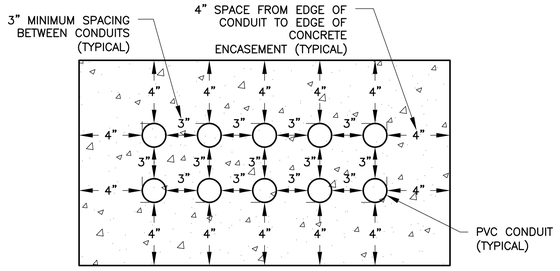

MULTI–LAYER DUCT/CONDUIT BANK–SPACING DETAIL FOR REINFORCED AND CONCRETE ENCASED DUCT/CONDUIT BANKS (1) [TD-E-008]

SCALE: N.T.S.

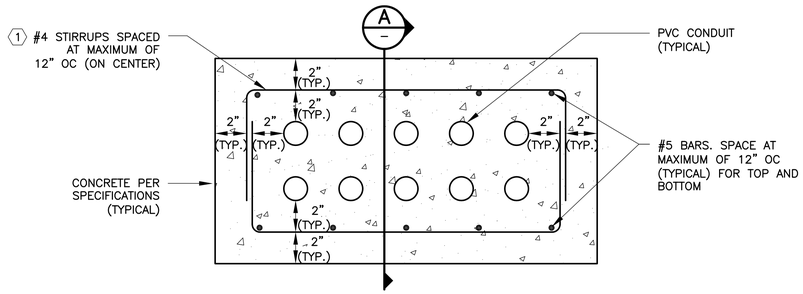

MULTI–LAYER DUCT/CONDUIT BANK REINFORCEMENTAND CONCRETE BANK ENCASEMENT DETAIL (2) [TD-E-008]

SCALE: N.T.S.

KEY NOTES:

(1) #4 STIRRUPS SHALL BE SPACED AT A MAXIMUM OF TWELVE INCHES (12") ON CENTER (O.C.). HOWEVER, THE MAXIMUM SPACING REQUIREMENT FOR THE STIRRUPS SHALL BE REDUCED WHEN THE UNDERGROUND DUCT/CONDUIT BANK IS A CERTAIN DISTANCE, AS DENOTED ON THE STRUCTURAL DRAWINGS, FROM THE WALL OF A MANHOLE/STRUCTURE/BUILDING/ETC. (I.E. THE CONTRACTOR SHALL INSTALL MORE STIRRUPS WHEN THE UNDERGROUND DUCT/CONDUIT BANK IS WITHIN A CERTAIN DISTANCE, AS DENOTED ON THE STRUCTURAL DRAWINGS, FROM A WALL OF A MANHOLE/BUILDING/STRUCTURE/ETC.).

(2) MINIMUM COVER IS SHOWN. INCREASE AS NEEDED PER THE REQUIREMENTS OF THE SITE PLANS/DUCT BANK PLAN/PROFILE DRAWINGS AND THE NATIONAL ELECTRICAL CODE.

(3) PER NATIONAL ELECTRIC CODE, MINIMUM COVER FOR ALL DUCT BANKS BENEATH A ROADWAY IS 24".

MINIMUM SOIL COVER (2)

CONDUIT/DUCT BANK CONTENTS	"X"
600V (EXCEPT FOR OUTDOOR POLE MOUNTED WALKWAY LIGHTING FIXTURES)	24"
5kV AND 15kV	36"
15kV AND FIBER OPTIC IN COMBINED DUCT BANK	36"
STAND ALONE FIBER OPTIC AND/OR I&C DUCT BANK	24"
OUTDOOR POLE MOUNTED WALKWAY LIGHTING FIXTURES	18" (3)
ALL OTHERS	24"

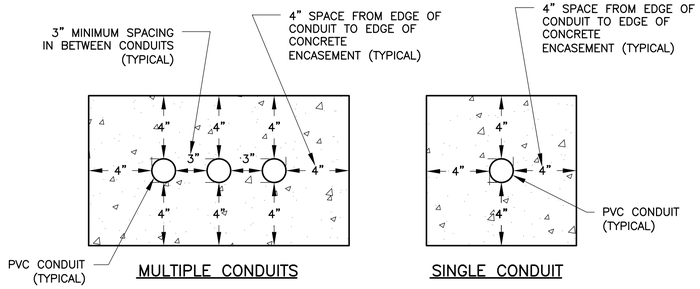

SINGLE–LAYER DUCT/CONDUIT BANK–SPACINGDETAIL FOR REINFORCED AND CONCRETE ENCASED DUCT/CONDUIT BANKS (3) [TD-E-008]

SCALE: N.T.S.

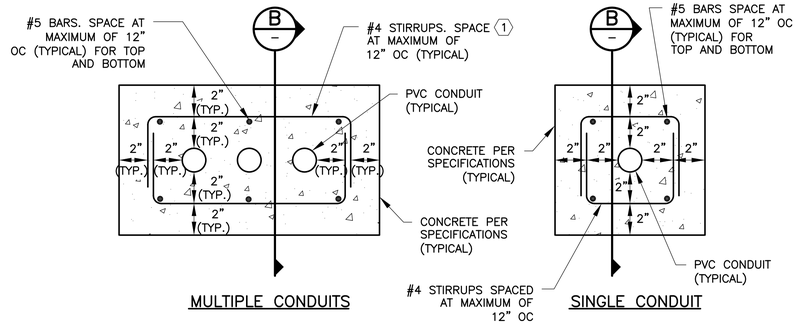

TYPICAL SINGLE–LAYER DUCT/CONDUIT BANK REINFORCEMENT AND CONCRETE BANK ENCASEMENT DETAIL (4) [TD-E-008]

SCALE: N.T.S.

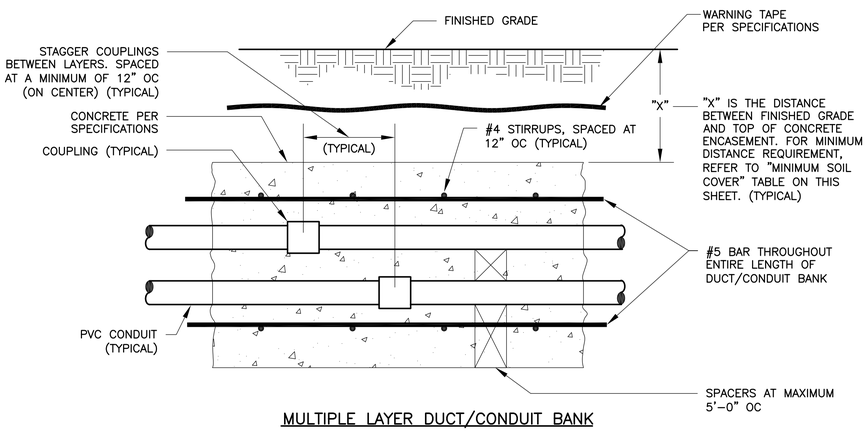

MULTIPLE LAYER DUCT/CONDUIT BANK

REINFORCEMENT AND CONCRETE ENCASEMENTLONGITUDINAL SECTION– "A" (A) [TD-E-008]

SCALE: N.T.S.

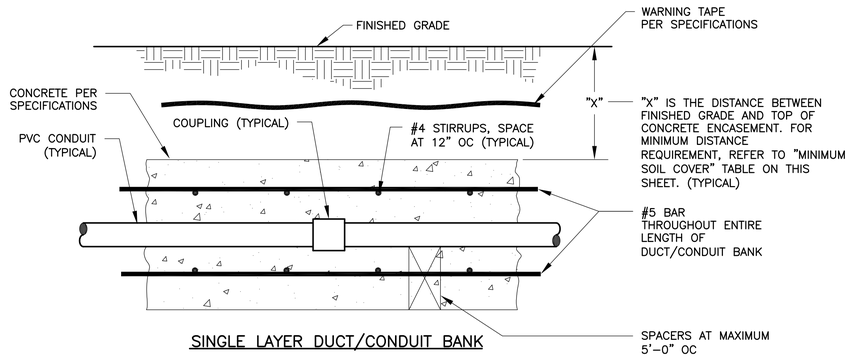

SINGLE LAYER DUCT/CONDUIT BANK

SINGLE–LAYER DUCT/CONDUIT BANK REINFORCEMENT AND CONCRETE ENCASEMENT LONGITUDINAL SECTION– "B" (B) [TD-E-008]

SCALE: N.T.S.

BAR LENGTH ON ORIGINAL DRAWING EQUALS ONE INCH, ADJUST SCALE ACCORDINGLY.

REUSE OF DOCUMENTS

This document, and the designs incorporated herein, is an instrument of professional service that has been developed, designed and prepared by Harutunian Engineering, Inc., and is not to be used, in whole or in part, for any other project without giving written notice to Harutunian Engineering, Inc.

NO.	DATE:	DESCRIPTION

HARUTUNIAN ENGINEERING INCORPORATED
TEXAS FIRM REGISTRATION NUMBER F–2408
ENGINEERING AND ENVIRONMENTAL CONSULTANTS
8100 CROSS PARK DRIVE
AUSTIN, TEXAS 78754

STATE OF TEXAS · SHANT HARUTUNIAN · 87735 · REGISTERED PROFESSIONAL ENGINEER · 10/7/2019

DESIGNED BY:	HEI
CHECKED BY:	HEI
APPROVED BY:	HEI
SUBMITTAL DATE:	OCTOBER 2019
SCALE:	AS SHOWN

SOUTH AUSTIN REGIONAL WASTEWATER TREATMENT PLANT
ELECTRICAL SUBSTATION NO. 1 REPLACEMENT PROJECT
CIP I.D.# 3333.032

ELECTRICAL STANDARD DETAILS VIII

PROJECT NO: 2014–300 | SHT. 812 OF 866 | DWG NO. TD–E–008

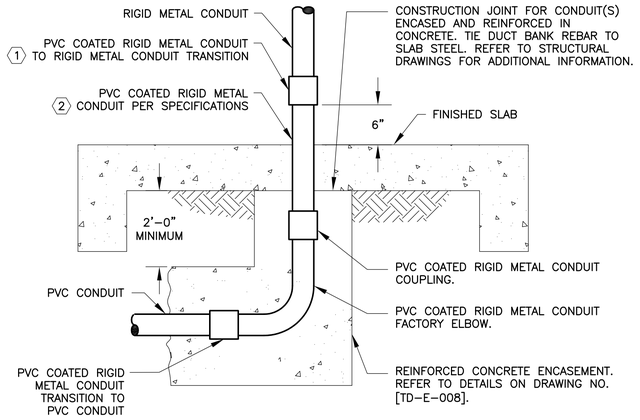

FINISHED INDOOR CONDUIT STUB-UP DETAIL 1
SCALE: N.T.S. [TD-E-009]

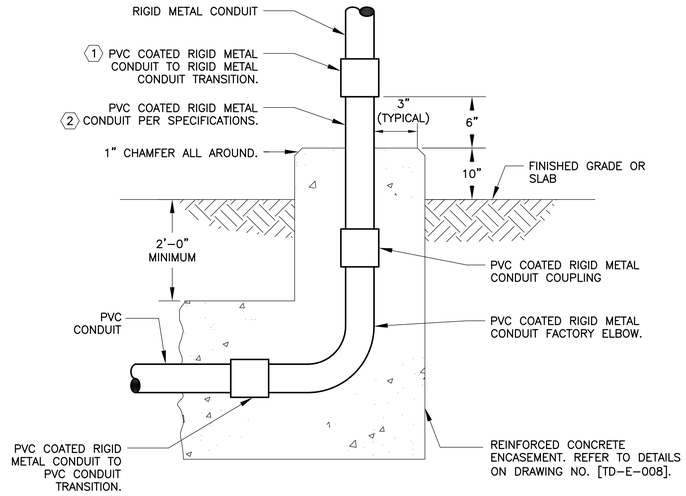

FINISHED OUTDOOR CONDUIT STUB-UP DETAIL 2
SCALE: N.T.S. [TD-E-009]

KEY NOTES:

1. FURNISH AND INSTALL RIGID METAL CONDUIT COUPLING AT THIS LOCATION TO INTERCONNECT FEMALE PVC COATED RIGID METAL CONDUIT TO RIGID METAL CONDUIT SYSTEM. THOROUGHLY COAT THREADS PRIOR TO ASSEMBLY PER SPECIFICATIONS.
2. ALTHOUGH SHOWN EXPOSED AND REQUIRED OTHERWISE BY THE SPECIFICATIONS, FURNISH AND INSTALL PER THE REQUIREMENTS OF THE "UNDERGROUND CONDUIT IN DUCT BANK SYSTEM" SUBSECTION OF SECTION 16150 OF THE CONTRACT SPECIFICATIONS.
3. FURNISH AND INSTALL PULL STRING INSIDE AND ALONG ENTIRE LENGTH OF CONDUIT FOR FUTURE USE. TAPE PULL STRING AROUND INTERIOR OF CONDUIT ADJACENT TO PLUG THREADS.
4. THE EXISTING/PROPOSED STRUCTURE TYPE TO WHICH PROPOSED EQUIPMENT AND/OR SUPPORT SYSTEMS SHALL BE MOUNTED MAY VARY. THE EQUIPMENT ANCHOR TYPE SHALL CORRESPOND TO THE TYPE OF STRUCTURE TO WHICH THE EQUIPMENT AND/OR SUPPORT SYSTEMS ARE ATTACHED. THE DRAWING REFLECTS A SPECIFIC STRUCTURE TYPE WITH CORRESPONDING ANCHOR TYPE AND IS TYPICAL FOR THE STRUCTURE TYPE SHOWN. TO ATTACH EQUIPMENT/SUPPORT SYSTEMS TO PRE-CAST/CAST-IN-PLACE CONCRETE WALL/FLOOR SLAB STRUCTURE TYPES, FURNISH AND INSTALL BOLT WITH EXPANSION ANCHOR. TO ATTACH EQUIPMENT/SUPPORT SYSTEMS TO A CONCRETE MASONRY UNIT (CMU)/BRICK WALL STRUCTURE TYPE, FURNISH AND INSTALL BOLT WITH EXPANSION ANCHOR. TO ATTACH EQUIPMENT/SUPPORT SYSTEMS TO AN EXISTING STEEL STRUCTURE TYPE, FURNISH AND INSTALL BOLTING ASSEMBLY AND/OR ANCHORING SYSTEM WITH BOLTING ASSEMBLY, PER SPECIFICATIONS AND STRUCTURAL REQUIREMENTS. COORDINATE ATTACHMENT REQUIREMENTS WITH STRUCTURAL.

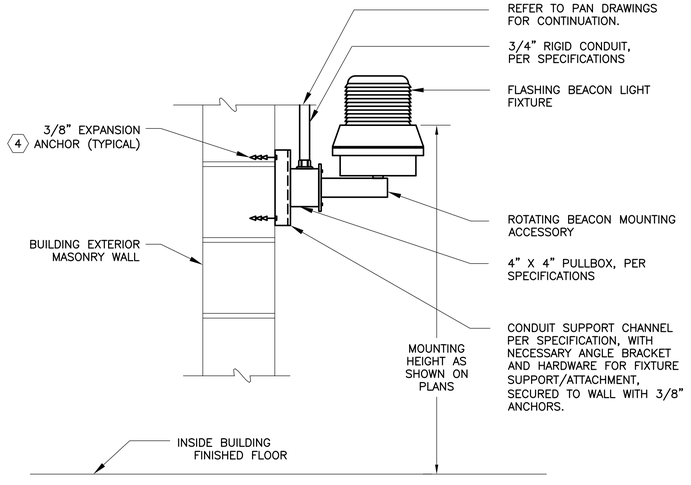

BEACON MOUNTING DETAIL 3
SCALE: N.T.S. [TD-E-009]

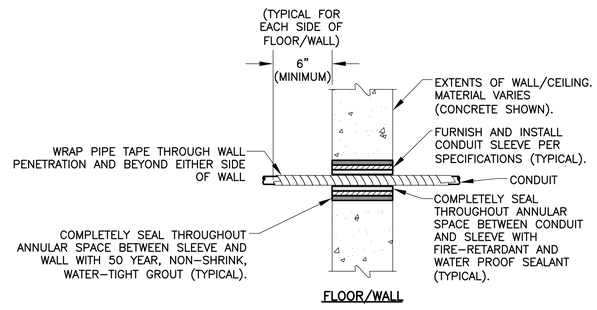

NOTE: THIS DETAIL DOES NOT APPLY TO FLOOR PENETRATIONS WHERE SLAB IS AT GRADE, BUT ONLY WHERE SLAB IS BETWEEN LEVELS.

CONDUIT PENETRATION DETAIL 4
SCALE: N.T.S. [TD-E-009]

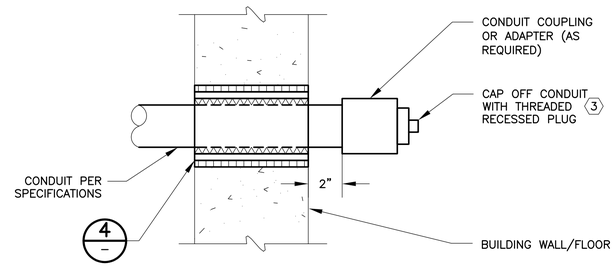

TERMINATION OF CONDUIT FOR FUTURE USE 5
SCALE: N.T.S. [TD-E-009]

BAR LENGTH ON ORIGINAL DRAWING EQUALS ONE INCH, ADJUST SCALE ACCORDINGLY.

REUSE OF DOCUMENTS

This document, and the designs incorporated herein, is an instrument of professional service that has been developed, designed and prepared by Harutunian Engineering, Inc., and is not to be used, in whole or in part, for any other project without giving written notice to Harutunian Engineering, Inc.

NO.	DATE:	DESCRIPTION

HARUTUNIAN ENGINEERING INCORPORATED
TEXAS FIRM REGISTRATION NUMBER F-2408
ENGINEERING AND ENVIRONMENTAL CONSULTANTS
8100 CROSS PARK DRIVE
AUSTIN, TEXAS 78754

STATE OF TEXAS · SHANT HARUTUNIAN · 87735 · REGISTERED · PROFESSIONAL ENGINEER
10/7/2019

DESIGNED BY:	HEI
CHECKED BY:	HEI
APPROVED BY:	HEI
SUBMITTAL DATE:	OCTOBER 2019
SCALE:	AS SHOWN

SOUTH AUSTIN REGIONAL WASTEWATER TREATMENT PLANT
ELECTRICAL SUBSTATION NO. 1 REPLACEMENT PROJECT
CIP I.D.# 3333.032

ELECTRICAL STANDARD DETAILS IX

PROJECT NO: 2014-300 | SHT. 813 OF 866 | DWG NO. TD-E-009

KEY NOTES:

1. THE STRUCTURE TYPE TO WHICH EQUIPMENT AND/OR SUPPORT SYSTEMS SHALL BE MOUNTED MAY VARY. THE EQUIPMENT ANCHOR TYPE SHALL CORRESPOND TO THE TYPE OF STRUCTURE TO WHICH EQUIPMENT AND/OR SUPPORT SYSTEMS ARE ATTACHED. THE DRAWING REFLECTS A SPECIFIC STRUCTURE TYPE WITH CORRESPONDING ANCHOR TYPE AND IS TYPICAL FOR STRUCTURE TYPE SHOWN. TO ATTACH EQUIPMENT/SUPPORT SYSTEMS TO PRE-CAST/CAST-IN-PLACE CONCRETE WALL/FLOOR SLAB STRUCTURE TYPES, FURNISH AND INSTALL BOLT WITH EXPANSION ANCHOR. TO ATTACH EQUIPMENT/SUPPORT SYSTEMS TO CONCRETE MASONRY UNIT (CMU)/BRICK WALL STRUCTURE TYPE, FURNISH AND INSTALL BOLT WITH EXPANSION ANCHOR.
2. CONDUIT/WIRE CONTINUES AS SHOWN ON PLAN DRAWINGS. FURNISH AND INSTALL CONDUIT SEAL WHERE REQUIRED ON DRAWINGS.

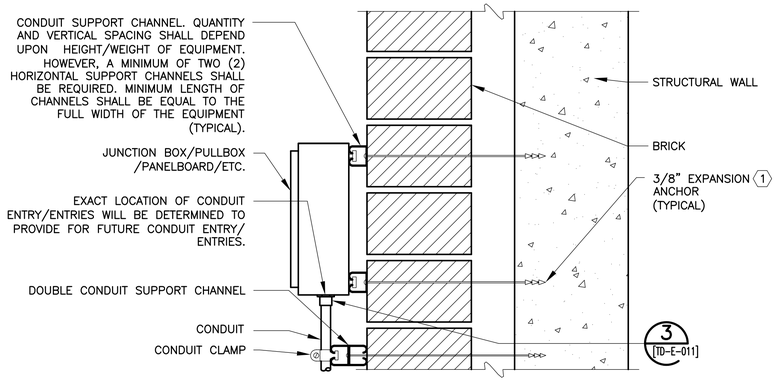

BRICK MOUNTED ELECTRICAL EQUIPMENT INSTALLATION DETAIL 1 [TD-E-010]

SCALE: N.T.S.

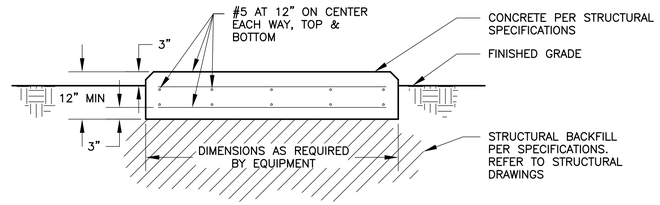

TYPICAL OUTDOOR ELECTRICAL EQUIPMENT PAD CONCRETE SLAB DETAIL 2 [TD-E-010]

SCALE: N.T.S.

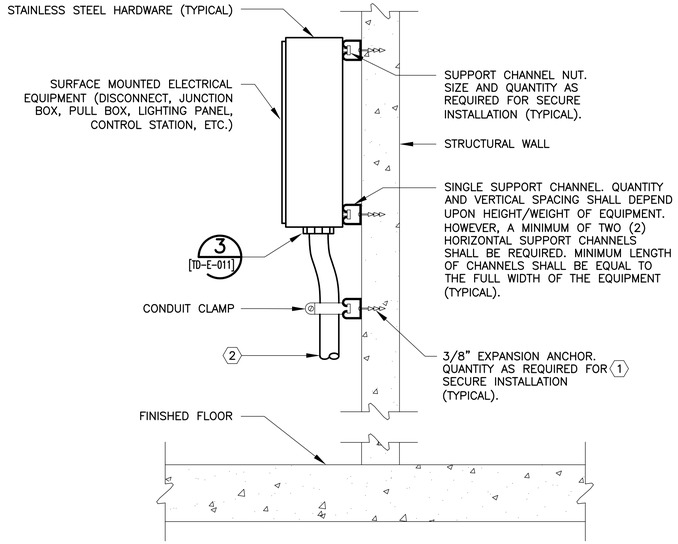

SIDE ELEVATION SURFACE/WALL MOUNTED ELECTRICAL EQUIPMENT INSTALLATION DETAIL 3 [TD-E-010]

SCALE: N.T.S.

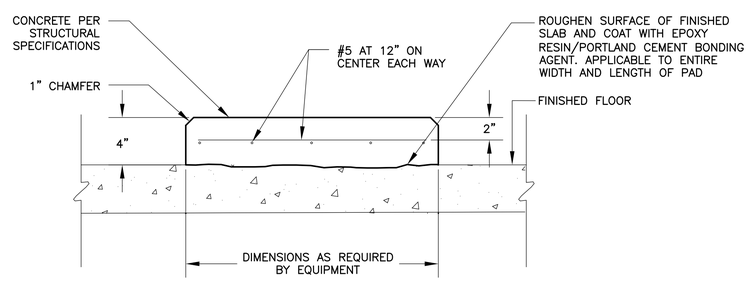

TYPICAL INDOOR ELECTRICAL EQUIPMENT PAD CONCRETE SLAB DETAIL 4 [TD-E-010]

SCALE: N.T.S.

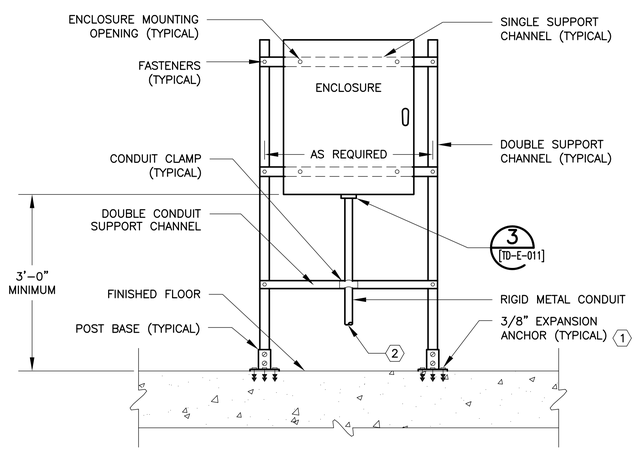

TYPICAL FRONT ELEVATION ENCLOSURE RACK DETAIL 5 [TD-E-010]

SCALE: N.T.S.

BAR LENGTH ON ORIGINAL DRAWING EQUALS ONE INCH, ADJUST SCALE ACCORDINGLY.

REUSE OF DOCUMENTS

This document, and the designs incorporated herein, is an instrument of professional service that has been developed, designed and prepared by Harutunian Engineering, Inc., and is not to be used, in whole or in part, for any other project without giving written notice to Harutunian Engineering, Inc.

NO.	DATE:	DESCRIPTION

HARUTUNIAN ENGINEERING INCORPORATED
TEXAS FIRM REGISTRATION NUMBER F-2408
ENGINEERING AND ENVIRONMENTAL CONSULTANTS
8100 CROSS PARK DRIVE
AUSTIN, TEXAS 78754

STATE OF TEXAS — SHANT HARUTUNIAN — 87735 — REGISTERED PROFESSIONAL ENGINEER — 10/7/2019

DESIGNED BY:	HEI
CHECKED BY:	HEI
APPROVED BY:	HEI
SUBMITTAL DATE:	OCTOBER 2019
SCALE:	AS SHOWN

SOUTH AUSTIN REGIONAL WASTEWATER TREATMENT PLANT
ELECTRICAL SUBSTATION NO. 1 REPLACEMENT PROJECT
CIP I.D.# 3333.032

ELECTRICAL STANDARD DETAILS X

PROJECT NO: 2014-300 | SHT. 814 OF 866 | DWG NO. TD-E-010

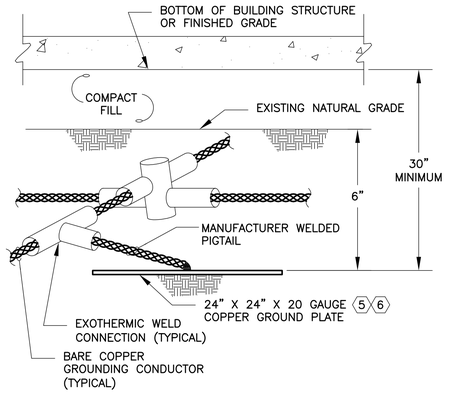

(BENEATH BUILDING OR STRUCTURE)

TYPICAL GROUND PLATE INSTALLATION DETAIL 1

[TD-E-011]

SCALE: N.T.S.

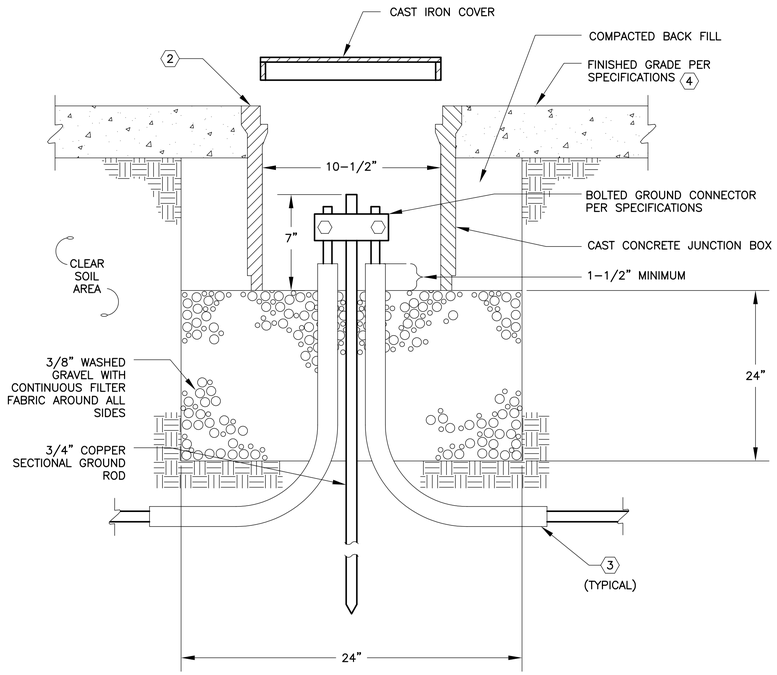

GROUND TEST WELL DETAIL 2

5

[TD-E-011]

SCALE: N.T.S.

KEY NOTES:

1. GROUND BUS BAR NOT NECESSARILY IN EXACT LOCATION SHOWN ON THIS DRAWING. GROUND BUS BAR DEPICTED IN THIS MANNER FOR PURPOSES OF CLARITY. CONTRACTOR SHALL FURNISH AND INSTALL SUFFICIENT LENGTH OF ALL GROUNDING CONDUCTORS TO ROUTE THROUGH DESIGNATED WIRING AREAS OF EQUIPMENT TO/FROM ACTUAL LOCATION OF EQUIPMENT GROUND BUS BAR.
2. FURNISH AND INSTALL PRECAST CONCRETE PULLBOX COMPLETE WITH LID. SUBMIT SHOP DRAWINGS AND O&M MANUALS PER SECTION 16550 OF THE CONTRACT SPECIFICATIONS. BOX SHALL BE 10 1/2" X 17 1/4" METER BOX SERIES AS MANUFACTURED BY BROOKS PRODUCTS, OR APPROVED EQUAL. BROOKS PRODUCTS PART NUMBERS ARE:
   - A. REINFORCED CONCRETE BODY NO. 36 MB
   - B. CAST IRON COVER NO. 36-T
3. 250 KCMIL STRANDED COPPER GROUNDING CONDUCTOR IN 1-1/2" PVC CONDUIT, DIRECT BURIED A MINIMUM OF 30 INCHES BELOW FINISHED GRADE (NOT CONCRETE ENCASED). EACH PVC CONDUIT SHALL EXTEND A MINIMUM OF 12 INCHES HORIZONTALLY FROM THE OUTSIDE EDGE OF THE TEST WELL CONCRETE CAST JUNCTION BOX.
4. COORDINATE LOCATION OF FINISHED GRADE (PARKING LOT/SIDEWALK/NATURAL GRADE/ETC.) WITH SITE/CIVIL DRAWINGS. SLOPE FINISHED GRADE AWAY FROM TEST WELL LID TO PREVENT WATER ACCUMULATION IN VICINITY OF WELL LID.
5. CONTRACTOR SHALL COORDINATE THE INSTALLATION OF, AND PROTECTION OF, THE ENTIRE GROUNDING NETWORK (GROUND PLATES AND ASSOCIATED GROUNDING CONDUCTORS IN AND AROUND THE STRUCTURE) WITH CIVIL/STRUCTURAL/MECHANICAL DRAWINGS/CONTRACTORS DURING ALL PHASES OF CONSTRUCTION.
6. COORDINATE THE LOCATION/INSTALLATION OF EACH GROUND PLATE WITH CIVIL/STRUCTURAL/MECHANICAL/ELECTRICAL DRAWINGS/CONTRACTORS TO AVOID CONFLICTS. SLIGHT RELOCATION OF GROUND PLATES AND/OR GROUNDING CONDUCTORS FROM THAT SHOWN ON GROUNDING PLAN MAY BE NECESSARY TO AVOID CONFLICTS. ARRANGE/INSTALL GROUND PLATES IN ORDER TO MAINTAIN A MINIMUM DISTANCE OF 10'-0" FROM ANY OTHER GROUND PLATE.

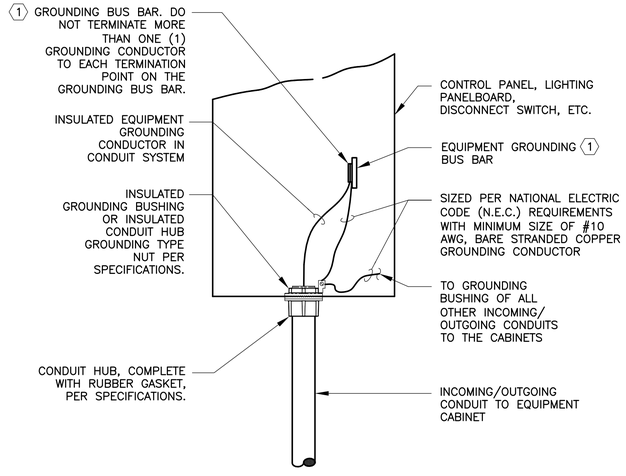

TYPICAL FOR BOTTOM AND TOP CONDUIT ENTRY TO EQUIPMENT-INDOOR 3

[TD-E-011]

SCALE: N.T.S.

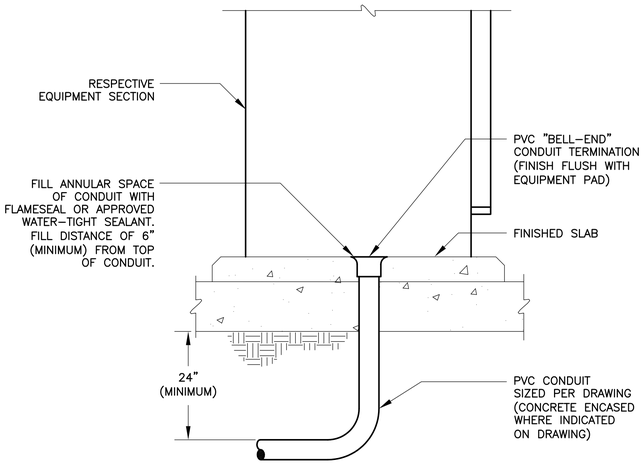

TYPICAL CONDUIT ENTRANCE TO PAD MOUNTED EQUIPMENT-SECTION DETAIL 4

[TD-E-011]

SCALE: N.T.S.

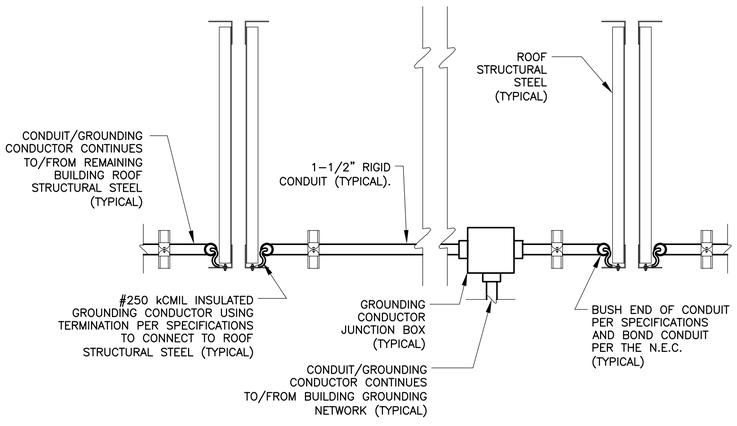

TYPICAL ROOF TRUSS GROUNDING INSTALLATION DETAIL 5

5

[TD-E-011]

SCALE: N.T.S.

BAR LENGTH ON ORIGINAL DRAWING EQUALS ONE INCH, ADJUST SCALE ACCORDINGLY.

REUSE OF DOCUMENTS

This document, and the designs incorporated herein, is an instrument of professional service that has been developed, designed and prepared by Harutunian Engineering, Inc., and is not to be used, in whole or in part, for any other project without giving written notice to Harutunian Engineering, Inc.

NO.	DATE:	DESCRIPTION

HARUTUNIAN ENGINEERING INCORPORATED

TEXAS FIRM REGISTRATION NUMBER F-2408

ENGINEERING AND ENVIRONMENTAL CONSULTANTS
8100 CROSS PARK DRIVE
AUSTIN, TEXAS 78754

STATE OF TEXAS · SHANT HARUTUNIAN · 87735 · REGISTERED PROFESSIONAL ENGINEER · 10/7/2019

DESIGNED BY:	HEI
CHECKED BY:	HEI
APPROVED BY:	HEI
SUBMITTAL DATE:	OCTOBER 2019
SCALE:	AS SHOWN

SOUTH AUSTIN REGIONAL WASTEWATER TREATMENT PLANT
ELECTRICAL SUBSTATION NO. 1 REPLACEMENT PROJECT
CIP I.D.# 3333.032

ELECTRICAL STANDARD DETAILS XI

PROJECT NO: 2014-300 | SHT. 815 OF 866 | DWG NO. TD-E-011

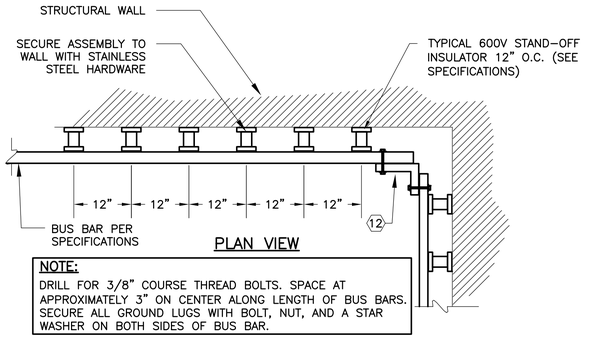

DC BATTERY TEST AREA GROUND BUS INSTALLATION DETAIL

SCALE: N.T.S.

1 [TD-E-012] ⟨11⟩

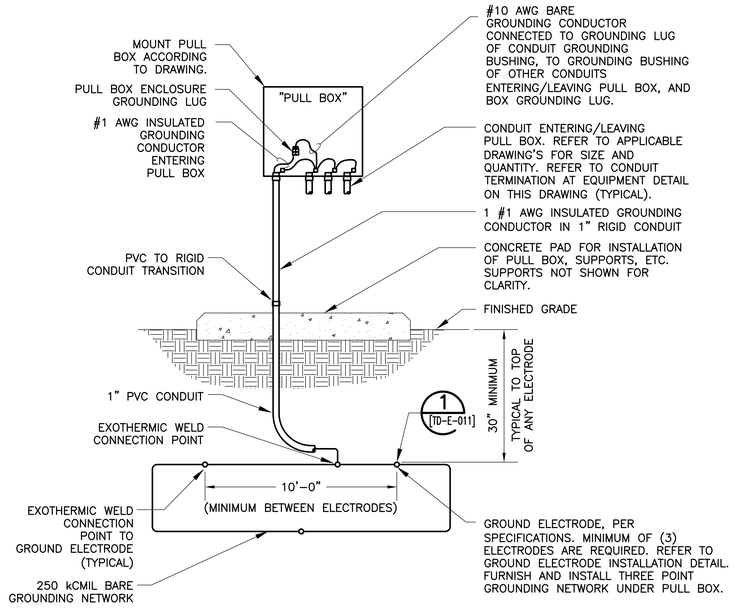

PULL BOX GROUNDING DETAIL

SCALE: N.T.S.

2 [TD-E-012] ⟨11⟩

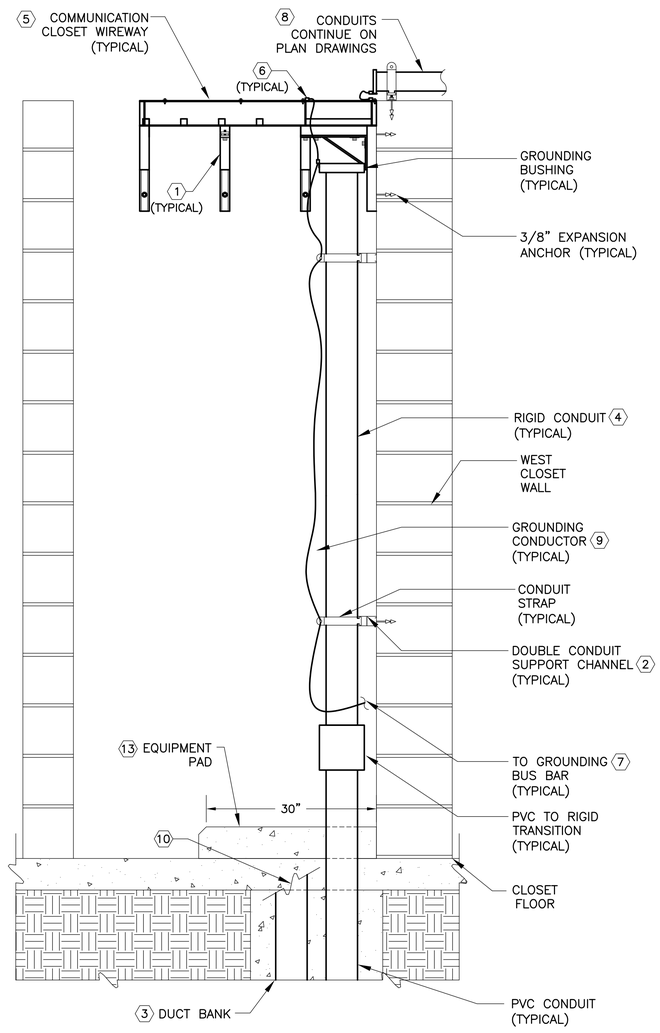

COMMUNICATION CLOSET ELEVATION DETAIL

SCALE: N.T.S.

3 [TD-E-012] ⟨11⟩

KEY NOTES:

⟨1⟩ COMMUNICATION WIREWAY SUPPORT ASSEMBLY. FURNISH AND INSTALL ALL NECESSARY CONDUIT SUPPORT CHANNEL, ANGLE BRACKETS, HARDWARE AND ANCHORS REQUIRED TO CONSTRUCT ASSEMBLY. FURNISH AND INSTALL ADEQUATE NUMBER OF ASSEMBLIES TO SUPPORT A MINIMUM OF 150 PERCENT OF WIREWAY MANUFACTURERS STATED LOAD CAPACITY. FURNISH AND INSTALL AT LEAST A MINIMUM OF THE NUMBER OF ASSEMBLIES SHOWN ON DRAWING NO. [SUB1-E-039].

⟨2⟩ CONDUIT SUPPORT CHANNEL PER SPECIFICATION.

⟨3⟩ DUCT BANK CONTINUES. REFER TO DRAWING NO. [SUB1-E-039] FOR CONTINUATION AND ADDITIONAL INFORMATION.

⟨4⟩ PROPOSED CONDUIT/WIRE FOR COMMUNICATION CIRCUITS. WIRE NOT SHOWN HERE. STUB-UP THOSE PROPOSED CONDUITS WITH CIRCUITS/CABLES TO WITHIN 6 INCHES OF BOTTOM OF COMMUNICATION CLOSET WIREWAY TO ENABLE A SMOOTH TRANSITION FOR CABLES AND FURNISH AND INSTALL GROUNDING BUSHING. BOND PROPOSED CONDUIT TO WIREWAY AS SHOWN.

⟨5⟩ COMMUNICATION CLOSET WIREWAY PER SPECIFICATION. MINIMUM WIDTH SHALL BE 12 INCHES, MINIMUM DEPTH SHALL BE 4 INCHES. LOCATE TOP OF WIREWAY FLUSH WITH TOP OF COMMUNICATION CLOSET STRUCTURAL WALLS, AND CONTINUOUS ALONG THE INTERIOR FACE OF EACH WALL. BOND EACH/EVERY SEGMENT OF WIREWAY TOGETHER WITH A #6 AWG BARE GROUND CONDUCTOR. TERMINATE EACH END OF GROUND CONDUCTOR SIMILAR TO THE SUPPORT CHANNEL GROUNDING DETAIL ON DRAWING NO. [TD-E-013].

⟨6⟩ BOND THE COMMUNICATION CLOSET WIREWAY TO EACH CONDUIT TO/FROM WIREWAY WITH A #6 AWG BARE GROUND CONDUCTOR IN A METHOD SIMILAR TO THE DETAILS ON DRAWING NO. [TD-E-013].

⟨7⟩ 1-#6 AWG BARE GROUND CONDUCTOR CONTINUES TO/FROM COMMUNICATION CLOSET GROUNDING BUS BAR. REFER TO DRAWING NO. [SUB1-E-045] FOR BUS BAR LOCATION AND ADDITIONAL INFORMATION.

⟨8⟩ COMMUNICATION CONDUITS CONTINUE TO/FROM CONDUIT BANKS. REFER TO DRAWING [SUB1-E-039] FOR CONTINUATION AND ADDITIONAL INFORMATION.

⟨9⟩ 1-BARE #6 AWG GROUND CONDUCTOR WITH DAISY CHAINED CONNECTIONS AND THE FOLLOWING PATH: TO/FROM CABLE CLOSET GROUNDING BUS BAR, THEN TO/FROM CONDUIT STRAP AT CONDUIT STUB-UP, THEN TO/FROM NEXT STRAPS, THEN TO/FROM GROUNDING BUSHING OF CONDUIT DIRECTLY BELOW CABLE WIREWAY, THEN ENDING AT TERMINATION ON CABLE WIREWAY AT TOP OF COMMUNICATION CLOSET WALL. EACH INDIVIDUAL CONDUIT ROUTE SHALL HAVE A SEPARATE AND DEDICATED GROUND CONDUCTOR. EACH GROUND CONNECTION/TERMINATION SHALL BE MADE WITH A COPPER BARREL COMPRESSION TERMINAL/LUG FITTING PER SPECIFICATIONS.

⟨10⟩ CONDUIT BANK IS TWO OR THREE ROWS DEEP, FRONT ROW(S) NOT SHOWN FOR CLARITY. ALTHOUGH NOT SHOWN, FURNISH AND INSTALL CONDUIT SUPPORT CHANNEL AS REQUIRED TO SUPPORT PROPOSED CONDUIT/WIRE.

⟨11⟩ CONTRACTOR SHALL COORDINATE THE INSTALLATION OF, AND PROTECTION OF, THE ENTIRE GROUNDING NETWORK (GROUND RODS AND ASSOCIATED GROUNDING CONDUCTORS IN AND AROUND THE STRUCTURE) WITH CIVIL/STRUCTURAL/MECHANICAL DURING ALL PHASES OF CONSTRUCTION.

⟨12⟩ COPPER ANGLE TO CONNECT BUS BARS. ANGLE WIDTH AND THICKNESS TO MATCH BUS BAR. FASTEN WITH TWO 3/8" COARSE THREAD BOLTS, NUTS AND A STAR WASHER ON BOTH SIDES OF ANGLE/BUS BAR ATTACHMENT POINTS. AT ANY OTHER SPLICE POINTS ALONG LENGTH OF BUS BAR, COUPLING BAR SHALL BE SAME WIDTH AND THICKNESS AS BUS BAR, AND BE OF SUFFICIENT LENGTH TO ALLOW TWO BOLT/NUT/WASHER ASSEMBLIES ON EACH SIDE OF SPLICE, AT BOLT SPACING DIMENSION SHOWN.

⟨13⟩ FURNISH AND INSTALL INDOOR EQUIPMENT PAD PER THE DETAIL 4 ON DRAWING NO. [TD-E-010]. PAD TO EXTEND OUTWARD HORIZONTALLY 30" FROM SURFACE OF REAR STRUCTURAL CLOSET WALL AND ENTIRE WIDTH OF CABLE CLOSET.

BAR LENGTH ON ORIGINAL DRAWING EQUALS ONE INCH, ADJUST SCALE ACCORDINGLY.

REUSE OF DOCUMENTS

This document, and the designs incorporated herein, is an instrument of professional service that has been developed, designed and prepared by Harutunian Engineering, Inc., and is not to be used, in whole or in part, for any other project without giving written notice to Harutunian Engineering, Inc.

NO.	DATE:	DESCRIPTION

HARUTUNIAN ENGINEERING INCORPORATED
TEXAS FIRM REGISTRATION NUMBER F-2408
ENGINEERING AND ENVIRONMENTAL CONSULTANTS
8100 CROSS PARK DRIVE
AUSTIN, TEXAS 78754

STATE OF TEXAS · SHANT HARUTUNIAN · 87735 · REGISTERED · PROFESSIONAL ENGINEER
10/7/2019

DESIGNED BY:	HEI
CHECKED BY:	HEI
APPROVED BY:	HEI
SUBMITTAL DATE:	OCTOBER 2019
SCALE:	AS SHOWN

SOUTH AUSTIN REGIONAL WASTEWATER TREATMENT PLANT
ELECTRICAL SUBSTATION NO. 1 REPLACEMENT PROJECT
CIP I.D.# 3333.032

ELECTRICAL STANDARD DETAILS XII

PROJECT NO: 2014-300 | SHT. 816 OF 866 | DWG NO. TD-E-012

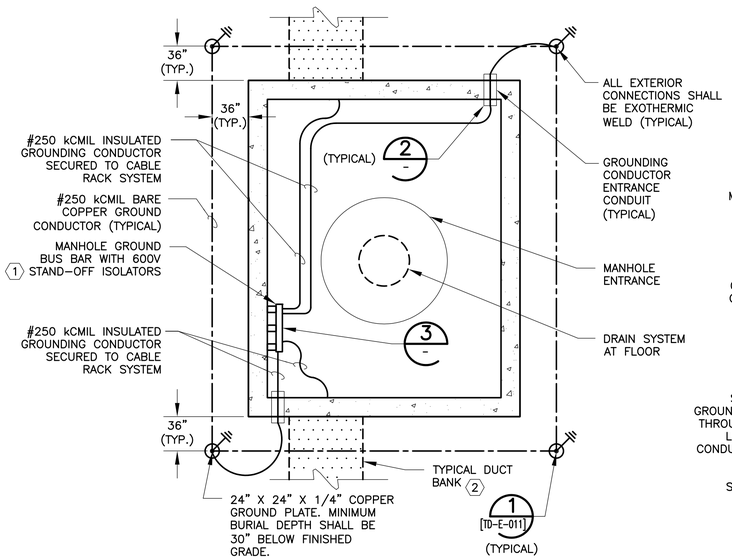

MANHOLE/HANDHOLE GROUNDING SYSTEM 1 [TD-E-013]
SCALE: N.T.S.

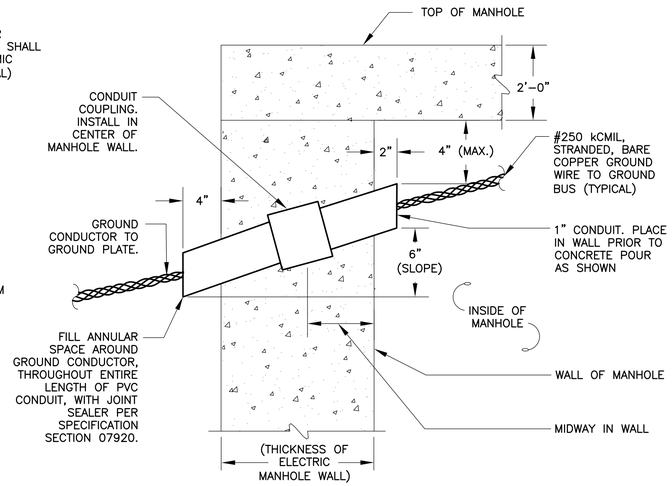

MANHOLE/HANDHOLE GROUNDING CONDUCTOR ENTRANCE DETAIL 2 [TD-E-013]
SCALE: N.T.S.

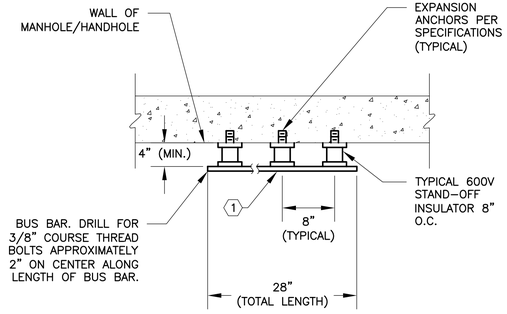

MANHOLE/HANDHOLE/CABLE CLOSET GROUND BUS ASSEMBLY DETAIL 3 [TD-E-013]
SCALE: N.T.S.

KEY NOTES:

1. LOCATE GROUNDING BUS BAR WITHIN 18" OF CEILING. CLOSELY AND CAREFULLY COORDINATE LOCATION OF GROUNDING BUS BAR WITH CORRESPONDING MANHOLE PLAN/ELEVATION DRAWING, AS APPLICABLE.
2. LOCATION AND SIZES OF DUCT BANK PENETRATIONS WILL VARY.
3. MINIMUM MANHOLE COVER SIZE IS INDICATED HERE. REFER TO THE MANHOLE PLAN, ELEVATION, AND STRUCTURAL DRAWINGS TO DETERMINE THE EXACT SIZE OF MANHOLE COVER REQUIRED FOR EACH INDIVIDUAL MANHOLE.
4. #250 kCMIL GROUNDING CONDUCTOR (NUMBER OF CONDUCTORS VARY) CONTINUES AROUND PERIMETER OF MANHOLE/HANDHOLE TO/FROM GROUNDING BUS BAR ASSEMBLY.
5. 1-#6 AWG GROUNDING CONDUCTOR, WITH DAISY CHAIN TERMINATION CONFIGURATION, CONTINUES TO/FROM NEXT CABLE INSULATOR/CLAMP ASSEMBLY AND/OR MANHOLE/HANDHOLE GROUNDING BUS BAR ASSEMBLY. REFER TO APPROPRIATE DETAIL ON THIS SHEET FOR SPECIFIC TERMINATION/ATTACHMENT INFORMATION AT EACH LOCATION IN MANHOLE/HANDHOLE. EACH CABLE/CIRCUIT TO HAVE A SEPARATE AND DEDICATED GROUNDING CONDUCTOR TERMINATED AT GROUNDING BUS.
6. CABLE SUPPORT CHANNEL GROUNDING CONDUCTOR CONTINUES TO/FROM EACH SEPARATE CABLE SUPPORT CHANNEL WITHIN CONFINES OF MANHOLE/HANDHOLE, THEN TO/FROM GROUNDING BUS BAR.
7. NUMBER OF GROUNDING CONDUCTORS AND COMPRESSION TERMINALS ATTACHED TO CABLE CLAMP WILL VARY.

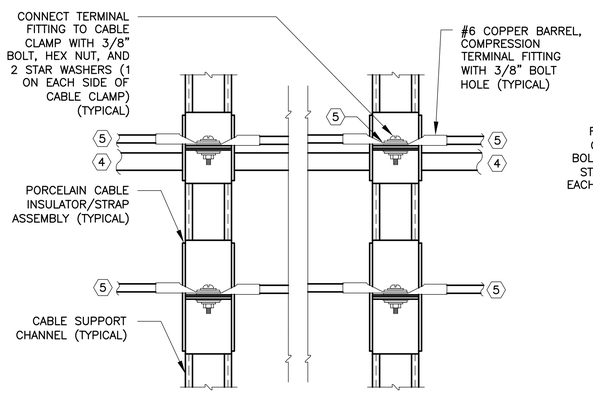

MANHOLE/HANDHOLE/CABLE CLOSET CABLE RACK GROUNDING DETAIL 4 [TD-E-013]
SCALE: N.T.S.

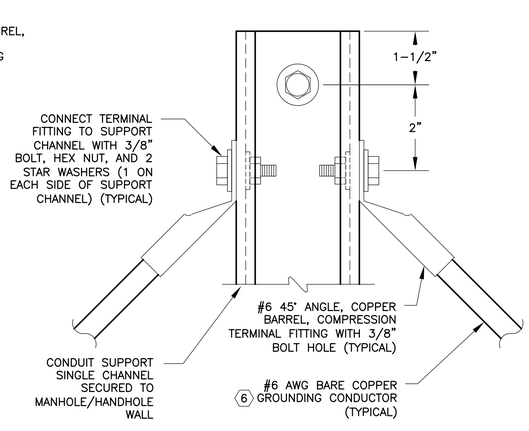

CABLE SUPPORT CHANNEL GROUNDING DETAIL 5 [TD-E-013]
SCALE: N.T.S.

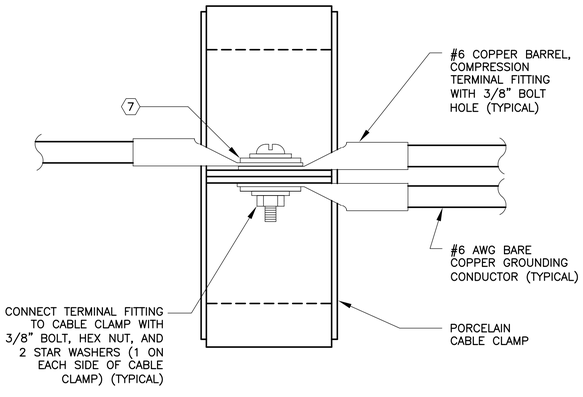

CABLE CLAMP GROUNDING DETAIL 6 [TD-E-013]
SCALE: N.T.S.

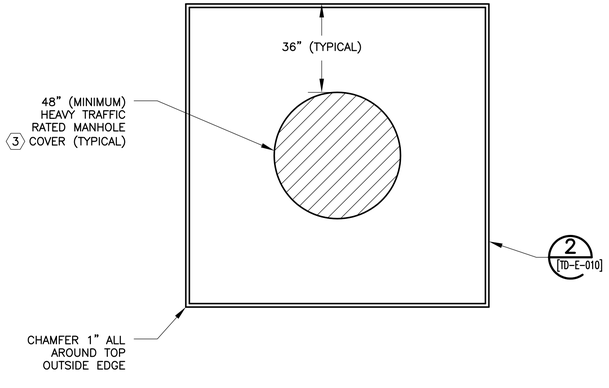

MANHOLE HOUSEKEEPING PAD 7 [TD-E-013]
SCALE: N.T.S.

BAR LENGTH ON ORIGINAL DRAWING EQUALS ONE INCH, ADJUST SCALE ACCORDINGLY.

REUSE OF DOCUMENTS

This document, and the designs incorporated herein, is an instrument of professional service that has been developed, designed and prepared by Harutunian Engineering, Inc., and is not to be used, in whole or in part, for any other project without giving written notice to Harutunian Engineering, Inc.

NO.	DATE:	DESCRIPTION

HARUTUNIAN ENGINEERING INCORPORATED
TEXAS FIRM REGISTRATION NUMBER F-2408
ENGINEERING AND ENVIRONMENTAL CONSULTANTS
8100 CROSS PARK DRIVE
AUSTIN, TEXAS 78754

STATE OF TEXAS · SHANT HARUTUNIAN · 87735 · REGISTERED · PROFESSIONAL ENGINEER
10/7/2019

DESIGNED BY:	HEI
CHECKED BY:	HEI
APPROVED BY:	HEI
SUBMITTAL DATE:	OCTOBER 2019
SCALE:	AS SHOWN

SOUTH AUSTIN REGIONAL WASTEWATER TREATMENT PLANT
ELECTRICAL SUBSTATION NO. 1 REPLACEMENT PROJECT
CIP I.D.# 3333.032

ELECTRICAL STANDARD DETAILS XIII

PROJECT NO: 2014-300 | SHT. 817 OF 866 | DWG NO. TD-E-013

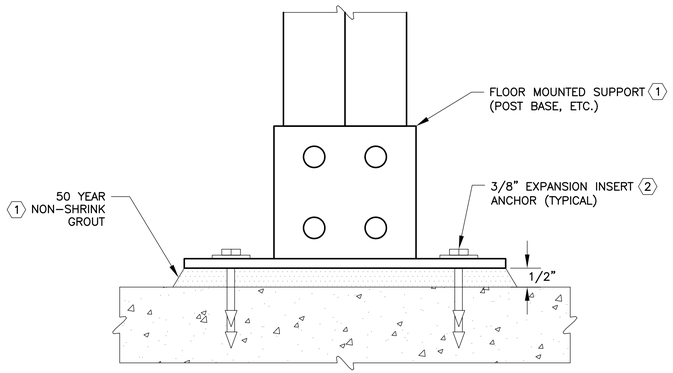

TYPICAL POST BASE FLOOR INSTALLATION (1) [TD-E-014]

SCALE: N.T.S.

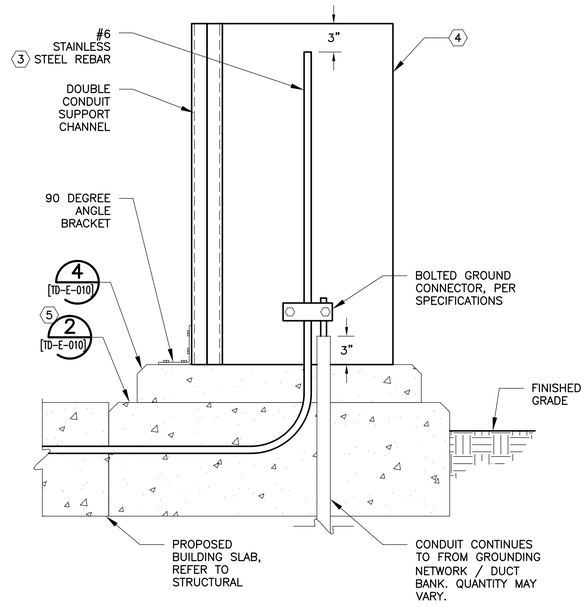

CONCRETE ENCASED ELECTRODE ACCESSIBILITY DETAIL (2) [TD-E-014]

SCALE: N.T.S.

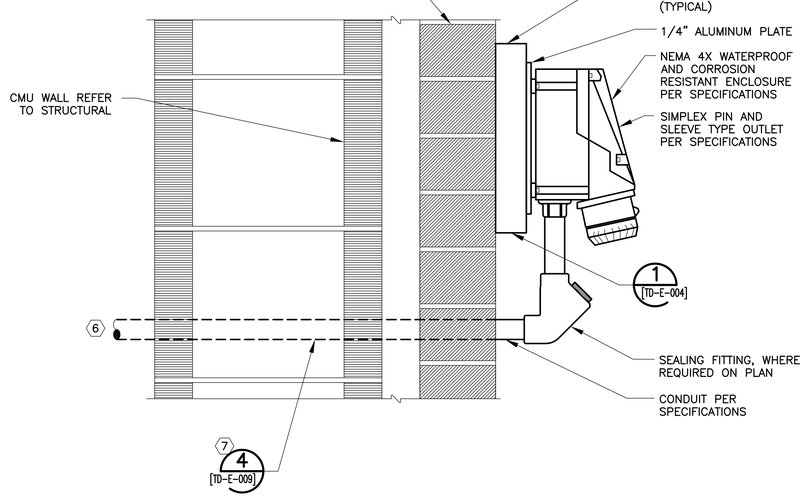

SURFACE WALL EXTERIOR MOUNTED SIMPLEX RECEPTACLE DETAIL (3) [TD-E-014]

SCALE: N.T.S.

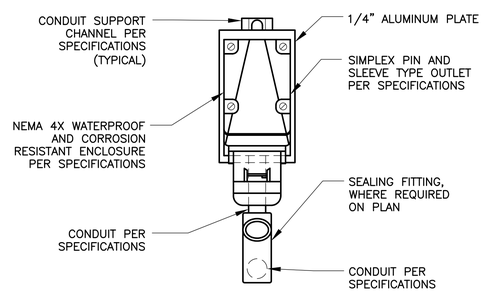

DETAIL (A) [TD-E-014]

SCALE: N.T.S.

KEY NOTES:

(1) AT LOCATIONS WHERE POST BASES OR OTHER SUPPORTS ARE MOUNTED TO FINISHED FLOOR, INSTALL 50 YEAR NON-SHRINK GROUT BETWEEN BASE PLATE AND FINISHED FLOOR. BEVEL EDGE ON ALL SIDES. TYPICAL FOR ALL FLOOR MOUNTED POST BASES AND OTHER FLOOR MOUNTED SUPPORTS ON PROJECT.

(2) THE STRUCTURE TYPE TO WHICH EQUIPMENT AND/OR SUPPORT SYSTEMS SHALL BE MOUNTED MAY VARY. THE EQUIPMENT ANCHOR TYPE SHALL CORRESPOND TO THE TYPE OF STRUCTURE TO WHICH THE EQUIPMENT AND/OR SUPPORT SYSTEMS ARE ATTACHED. THE DRAWING REFLECTS A SPECIFIC STRUCTURE TYPE WITH CORRESPONDING ANCHOR TYPE AND IS TYPICAL FOR THE STRUCTURE TYPE SHOWN. TO ATTACH EQUIPMENT/SUPPORT SYSTEMS TO PRE-CAST/CAST-IN-PLACE CONCRETE WALL/FLOOR SLAB STRUCTURE TYPES, FURNISH AND INSTALL BOLT WITH EXPANSION INSERT ANCHOR. TO ATTACH EQUIPMENT/SUPPORT SYSTEMS TO A CONCRETE MASONRY UNIT (CMU)/BRICK WALL STRUCTURE TYPE, FURNISH AND INSTALL BOLT WITH EXPANSION ANCHOR. TO ATTACH EQUIPMENT/SUPPORT SYSTEMS TO STEEL STRUCTURE TYPE, FURNISH AND INSTALL BOLTING ASSEMBLY. COORDINATE ATTACHMENT REQUIREMENTS WITH STRUCTURAL AND SPECIFICATIONS.

(3) CONTRACTOR SHALL INSTALL A CONCRETE ENCASED ELECTRODE GROUNDING SYSTEM TO COMPLY WITH CITY OF AUSTIN AMENDMENT TO THE NATIONAL ELECTRICAL CODE ORDINANCE 20090305-047 ARTICLE 250.52(A)(3) AND OBTAIN CITY INSPECTION PRIOR TO CONCRETE PLACEMENT OF BUILDING GRADE BEAMS OR SLABS. SAID GROUNDING SYSTEM SHALL INCLUDE A MINIMUM OF 20 FEET OF #6 STAINLESS STEEL REBAR, ROUTED HORIZONTALLY WITHIN THE BUILDING SLAB WITH MINIMUM OF 4" COVER AND ATTACHED TO THE REINFORCING STEEL BARS.

(4) FURNISH AND INSTALL STAINLESS STEEL JUNCTION BOX MINIMALLY SIZED 36"H x 24"W x 18"D. JUNCTION BOX SHALL BE MOUNTED SUCH THAT THE BOTTOM OF THE BOX IS FLUSH WITH THE TOP OF THE EQUIPMENT PAD. CUT A HOLE IN THE BOTTOM OF THE BOX SO THAT THE GROUNDING ELECTRODE EXTENDS INTO THE BOX. LABEL JUNCTION BOX AS "GROUND PORT" TO COMPLY WITH CITY OF AUSTIN AMENDMENT TO THE NATIONAL ELECTRICAL CODE ORDINANCE 20141211-199 ARTICLE 205.68(A)(A).

(5) FURNISH AND INSTALL EQUIPMENT PAD SIMILAR TO DETAIL TWO ON THIS DRAWING. PAD SHALL MATCH THICKNESS OF STRUCTURAL SLAB (EXCLUDING PERIMETER BEAMS) WITH MINIMUM DEPTH OF 7" BELOW GRADE.

(6) PROPOSED CONDUIT CONTINUES. REFER TO PLANS.

(7) CONDUIT PENETRATION PER DETAIL 4 ON DRAWING NO. [TD-E-009].

BAR LENGTH ON ORIGINAL DRAWING EQUALS ONE INCH, ADJUST SCALE ACCORDINGLY.

REUSE OF DOCUMENTS

This document, and the designs incorporated herein, is an instrument of professional service that has been developed, designed and prepared by Harutunian Engineering, Inc., and is not to be used, in whole or in part, for any other project without giving written notice to Harutunian Engineering, Inc.

NO.	DATE:	DESCRIPTION

HARUTUNIAN ENGINEERING INCORPORATED

TEXAS FIRM REGISTRATION NUMBER F-2408

ENGINEERING AND ENVIRONMENTAL CONSULTANTS
8100 CROSS PARK DRIVE
AUSTIN, TEXAS 78754

STATE OF TEXAS
SHANT HARUTUNIAN
87735
REGISTERED
PROFESSIONAL ENGINEER
10/7/2019

DESIGNED BY:	HEI
CHECKED BY:	HEI
APPROVED BY:	HEI
SUBMITTAL DATE:	OCTOBER 2019
SCALE:	AS SHOWN

SOUTH AUSTIN REGIONAL WASTEWATER TREATMENT PLANT
ELECTRICAL SUBSTATION NO. 1 REPLACEMENT PROJECT
CIP I.D.# 3333.032

ELECTRICAL STANDARD DETAILS XIV

PROJECT NO: 2014-300 | SHT. 818 OF 866 | DWG NO. TD-E-014

KEY NOTES:

1. CONTRACTOR SHALL COORDINATE THE INSTALLATION OF, AND PROTECTION OF, THE ENTIRE GROUNDING NETWORK (GROUND RODS AND ASSOCIATED GROUND CONDUCTORS IN AND AROUND THE STRUCTURE) WITH CIVIL/STRUCTURAL/MECHANICAL DURING ALL PHASES OF CONSTRUCTION.
2. COORDINATE THE LOCATION/INSTALLATION OF EACH GROUND ROD WITH CIVIL/STRUCTURAL/MECHANICAL/ELECTRICAL TO AVOID CONFLICTS. SLIGHT RELOCATION FROM THAT SHOWN ON GROUNDING PLAN MAY BE NECESSARY TO AVOID CONFLICTS. ARRANGE/INSTALL GROUND RODS IN ORDER TO MAINTAIN A MINIMUM DISTANCE FROM ANY OTHER GROUND ROD OF 13'–0". CONTRACTOR SHALL INSURE THAT A MINIMUM OF 10'–0" OF GROUND ROD IS DRIVEN INTO UNDISTURBED/CLEAR SOIL REGARDLESS OF DEPTH FROM FINISHED SLAB.

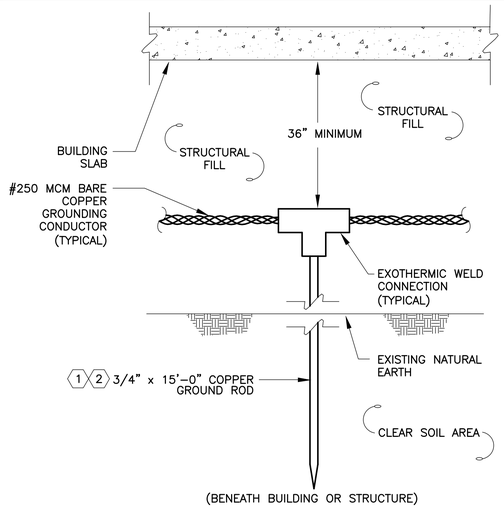

TYPICAL GROUND ROD UNDER STRUCTURE INSTALLATION DETAIL 1 [TD-E-015]
SCALE: N.T.S.

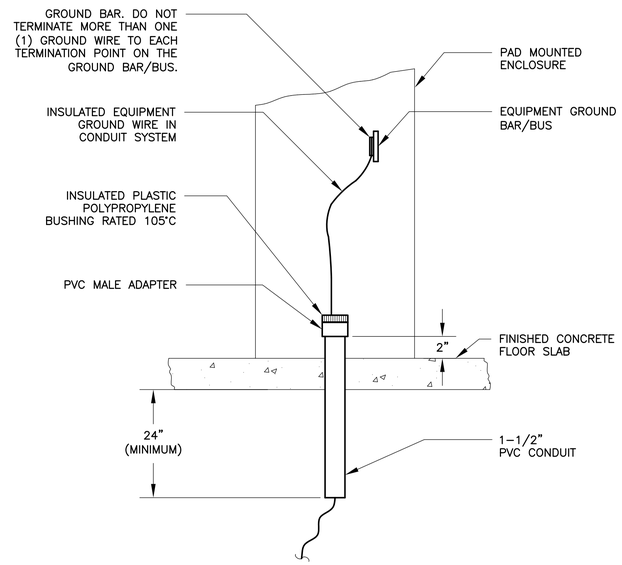

GROUNDING CONDUCTOR ENTRANCE AT SWITCHGEAR SECTION DETAIL 2 [TD-E-015]
SCALE: N.T.S.

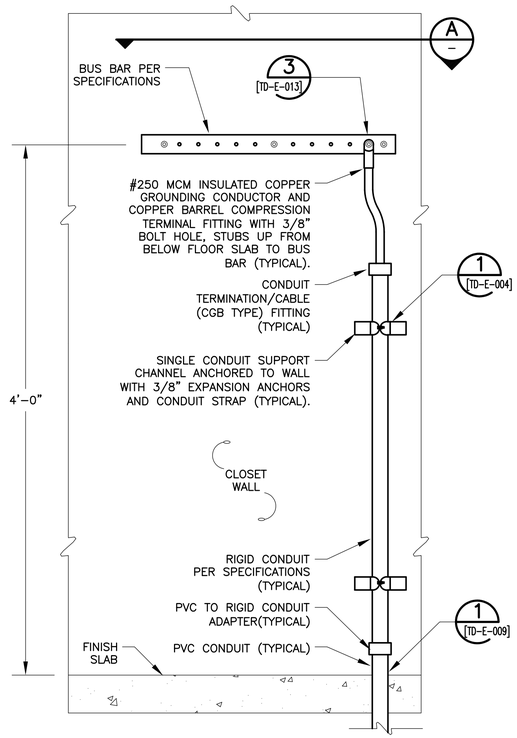

CLOSET BUS BAR/GROUNDING CONDUCTOR TERMINATION DETAIL 3 [TD-E-015]
SCALE: N.T.S.

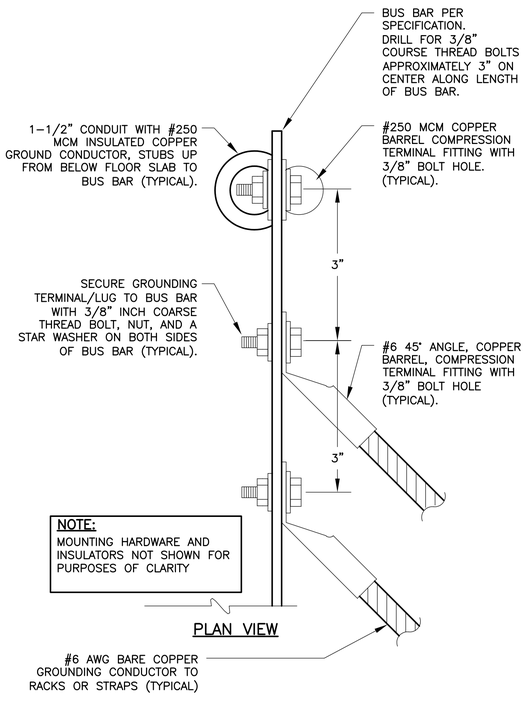

STRAP/RACKING/CONDUIT STUB–UP GROUNDING CONDUCTOR TO CLOSET BUS BAR TERMINATION DETAIL A –
SCALE: N.T.S.

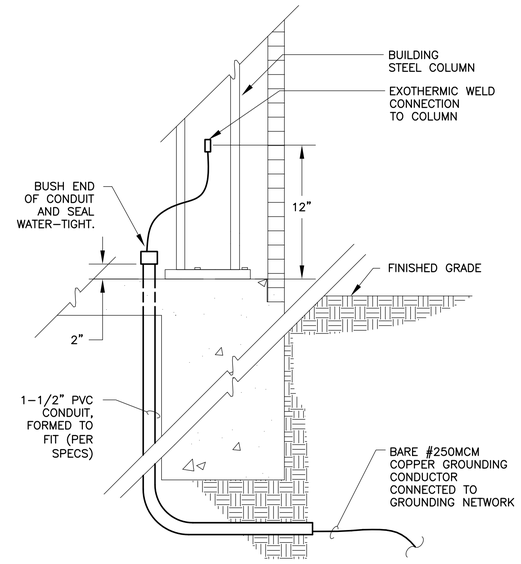

TYPICAL GROUNDING CONDUCTOR/ CONNECTION TO BUILDING COLUMN 4 [TD-E-015]
SCALE: N.T.S.

BAR LENGTH ON ORIGINAL DRAWING EQUALS ONE INCH, ADJUST SCALE ACCORDINGLY.

REUSE OF DOCUMENTS

This document, and the designs incorporated herein, is an instrument of professional service that has been developed, designed and prepared by Harutunian Engineering, Inc., and is not to be used, in whole or in part, for any other project without giving written notice to Harutunian Engineering, Inc.

NO.	DATE:	DESCRIPTION

HARUTUNIAN ENGINEERING INCORPORATED
TEXAS FIRM REGISTRATION NUMBER F–2408
ENGINEERING AND ENVIRONMENTAL CONSULTANTS
8100 CROSS PARK DRIVE
AUSTIN, TEXAS 78754

STATE OF TEXAS · SHANT HARUTUNIAN · 87735 · REGISTERED PROFESSIONAL ENGINEER
10/7/2019

DESIGNED BY:	HEI
CHECKED BY:	HEI
APPROVED BY:	HEI
SUBMITTAL DATE:	OCTOBER 2019
SCALE:	AS SHOWN

SOUTH AUSTIN REGIONAL WASTEWATER TREATMENT PLANT
ELECTRICAL SUBSTATION NO. 1 REPLACEMENT PROJECT
CIP I.D.# 3333.032

ELECTRICAL STANDARD DETAILS XV

PROJECT NO: 2014–300 | SHT. 819 OF 866 | DWG NO. TD–E–015

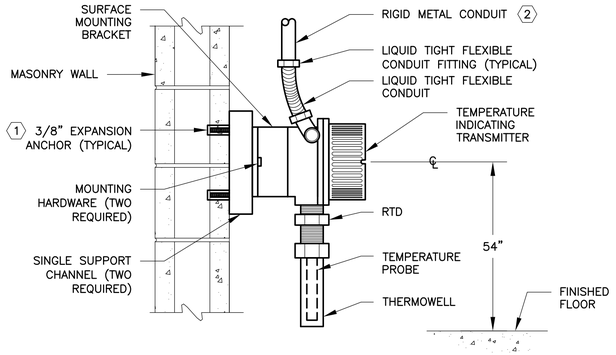

AMBIENT TEMPERATURE INDICATING TRANSMITTER AND ELEMENT INSTALLATION DETAIL 1 [TD-I-001]

SCALE: N.T.S.

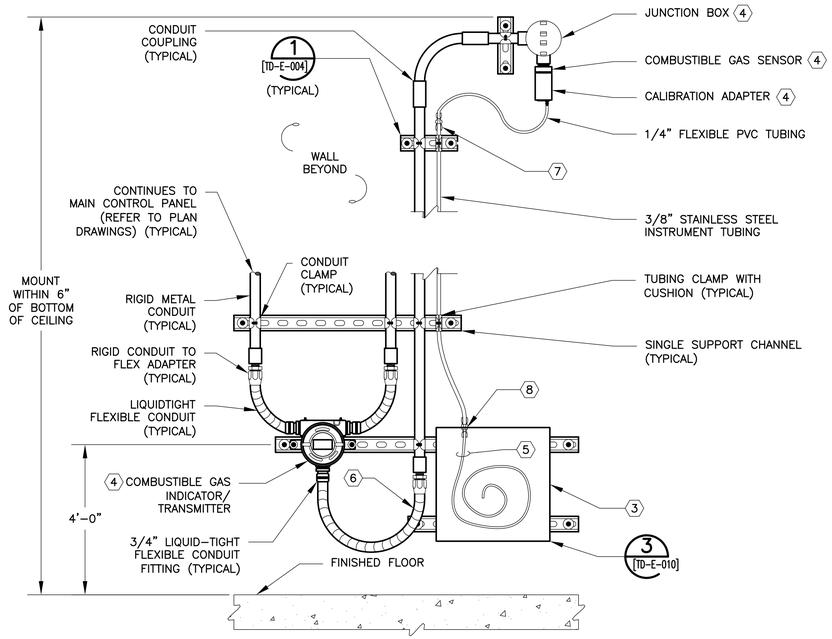

HYDROGEN SENSOR/TRANSMITTER DETAIL 2 [TD-I-001]

SCALE: N.T.S.

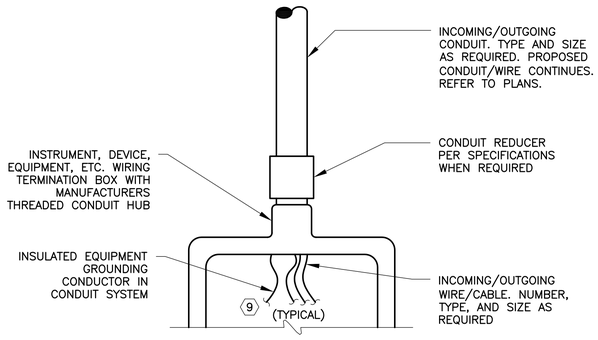

CONDUIT REDUCER INSTALLATION DETAIL 3 [TD-I-001]

SCALE: N.T.S.

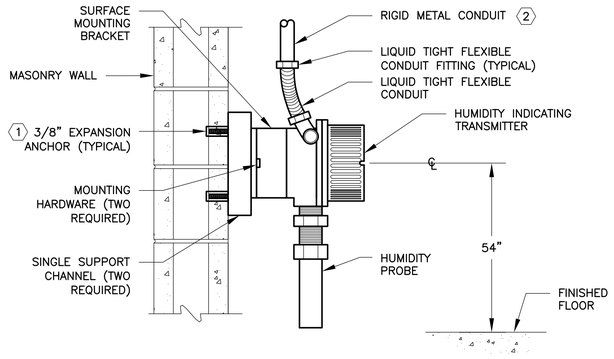

AMBIENT HUMIDTY INDICATING TRANSMITTER AND ELEMENT INSTALLATION DETAIL 4 [TD-I-001]

SCALE: N.T.S.

KEY NOTES:

1. THE STRUCTURE TYPE TO WHICH EQUIPMENT AND/OR SUPPORT SYSTEMS SHALL BE MOUNTED MAY VARY. THE EQUIPMENT ANCHOR TYPE SHALL CORRESPOND TO THE TYPE OF STRUCTURE TO WHICH THE EQUIPMENT AND/OR SUPPORT SYSTEMS ARE ATTACHED. THE DRAWING REFLECTS A SPECIFIC STRUCTURE TYPE WITH CORRESPONDING ANCHOR TYPE AND IS TYPICAL FOR THE STRUCTURE TYPE SHOWN. TO ATTACH EQUIPMENT/SUPPORT SYSTEMS TO PRE-CAST/CAST-IN-PLACE CONCRETE WALL/FLOOR SLAB STRUCTURE TYPES, FURNISH AND INSTALL BOLT WITH EXPANSION ANCHOR. TO ATTACH EQUIPMENT/SUPPORT SYSTEMS TO A CONCRETE MASONRY UNIT (CMU)/BRICK WALL STRUCTURE TYPE, FURNISH AND INSTALL BOLT WITH EXPANSION ANCHOR. TO ATTACH EQUIPMENT/SUPPORT SYSTEMS TO AN EXISTING STEEL STRUCTURE TYPE, FURNISH AND INSTALL BOLTING ASSEMBLY PER SPECIFICATIONS AND STRUCTURAL REQUIREMENTS. CLOSELY AND CAREFULLY COORDINATE ATTACHMENT REQUIREMENTS WITH STRUCTURAL.
2. POINT OF CONDUIT ENTRY SHOWN FOR REPRESENTATION ONLY. ACTUAL POINT OF CONDUIT ENTRY AS WELL AS QUANTITY AND SIZE OF CONDUIT MAY VARY WITH EACH APPLICATION.
3. FURNISH AND INSTALL PULL BOX MINIMALLY SIZED 12" X 12" X 6".
4. FURNISHED BY TRANSMITTER MANUFACTURER. INSTALL AND MAKE ALL FINAL CONNECTIONS PER MANUFACTURERS REQUIREMENTS.
5. COIL FIVE FEET OF 1/4" FLEXIBLE PVC TUBING INSIDE PULL BOX FOR CONNECTION TO CALIBRATION KIT.
6. FURNISH AND INSTALL INTERCONNECTING CONDUIT/WIRE BETWEEN TRANSMITTER AND SENSOR ASSEMBLY. COORDINATE WIRING REQUIREMENTS WITH MANUFACTURER.
7. FURNISH AND INSTALL TUBE INSERT AND REDUCING FITTING TO TRANSITION FROM 1/4" FLEXIBLE TUBING TO 3/8" RIGID TUBING.
8. FURNISH AND INSTALL TUBE INSERT AND REDUCING BULKHEAD FITTING TO CONNECT TO PULL BOX AND TRANSITION FROM 3/8" RIGID TUBING TO 1/4" FLEXIBLE TUBING.
9. BOND CONDUIT SYSTEM INSULATED GROUNDING CONDUCTOR TO WIRING TERMINATION BOX BY MEANS OF GROUND BUS BAR/TERMINATION BLOCK/LUG FURNISHED IN WIRING TERMINATION BOX. REFER TO DETAIL THREE ON DRAWING [TD-E-011] FOR ADDITIONAL INFORMATION.

BAR LENGTH ON ORIGINAL DRAWING EQUALS ONE INCH, ADJUST SCALE ACCORDINGLY.

REUSE OF DOCUMENTS

This document, and the designs incorporated herein, is an instrument of professional service that has been developed, designed and prepared by Harutunian Engineering, Inc., and is not to be used, in whole or in part, for any other project without giving written notice to Harutunian Engineering, Inc.

NO.	DATE:	DESCRIPTION

HARUTUNIAN ENGINEERING INCORPORATED
TEXAS FIRM REGISTRATION NUMBER F-2408
ENGINEERING AND ENVIRONMENTAL CONSULTANTS
8100 CROSS PARK DRIVE
AUSTIN, TEXAS 78754

STATE OF TEXAS · SHANT HARUTUNIAN · 87735 · REGISTERED · PROFESSIONAL ENGINEER
10/7/2019

DESIGNED BY:	HEI
CHECKED BY:	HEI
APPROVED BY:	HEI
SUBMITTAL DATE:	OCTOBER 2019
SCALE:	AS SHOWN

SOUTH AUSTIN REGIONAL WASTEWATER TREATMENT PLANT
ELECTRICAL SUBSTATION NO. 1 REPLACEMENT PROJECT
CIP I.D.# 3333.032

INSTRUMENTATION STANDARD DETAILS I

PROJECT NO: 2014-300 | SHT. 820 OF 866 | DWG NO. TD-I-001

SHEET INDEX:

NO.	SHEET NO.	TITLE
1	A-G-001A	COVER SHEET
2	A-G-99B	GENERAL CONSTRUCTION NOTES
3	A-G-100D	GENERAL CONSTRUCTION NOTES
4	A-G-022D	LOCATION KEYMAP AND CONSTRUCTION ACCESS
5	A-D-017C	DIMENSIONAL CONTROL PLAN
6	A-D-027C	DIMENSIONAL CONTROL PLAN
7	A-D-037D	DIMENSIONAL CONTROL PLAN
8	A-D-038C	DIMENSIONAL CONTROL PLAN
9	A-D-039C	DIMENSIONAL CONTROL PLAN
10	A-D-045C	DIMENSIONAL CONTROL PLAN
11	A-D-046C	DIMENSIONAL CONTROL PLAN
12	A-D-047C	DIMENSIONAL CONTROL PLAN
13	A-D-050C	DIMENSIONAL CONTROL PLAN
14	A-D-051C	DIMENSIONAL CONTROL PLAN
15	A-D-052C	DIMENSIONAL CONTROL PLAN
16	A-D-057C	DIMENSIONAL CONTROL PLAN
17	A-D-058C	DIMENSIONAL CONTROL PLAN
18	S-C-037C	EXCAVATION, GRADING AND PAVING PLAN
19	TD-C-002B	STANDARD CIVIL DETAILS 2
20	S-U-237C	SITE UTILITIES – DUCT BANK (CIVIL) – PROPOSED
21	S-U-245B	SITE UTILITIES – DUCT BANK (CIVIL) – PROPOSED
22	G-C-001A	PROPERTY BOUNDARY
23	G-C-037A	SUBSTATION SITE PLAN
24	G-C-100A	DRAINAGE AREA MAP AND DETENTION PLAN
25	G-C-137A	WATER QUALITY CONTROL PLAN
26	S-C-100A	GRADING AND DRAINAGE
27	TD-C-008A	DRAINAGE DETAILS
28	A-C-027A	EROSION CONTROL SHEET 1
29	A-C-037A	EROSION CONTROL SHEET 2
30	A-C-038A	EROSION CONTROL SHEET 3
31	A-C-039A	EROSION CONTROL SHEET 4
32	A-C-045A	EROSION CONTROL SHEET 5
33	A-C-046A	EROSION CONTROL SHEET 6
34	A-C-047A	EROSION CONTROL SHEET 7
35	A-C-050A	EROSION CONTROL SHEET 8
36	A-C-051A	EROSION CONTROL SHEET 9
37	A-C-052A	EROSION CONTROL SHEET 10
38	A-C-057A	EROSION CONTROL SHEET 11
39	A-C-058A	EROSION CONTROL SHEET 12
40	T-C-017B	REFERENCE DRAWING
41	TD-C-005A	EROSION AND SEDIMENTATION DETAILS
42	TD-C-006A	TREE PROTECTION DETAILS
43	TD-C-007A	ENVIRONMENTAL NOTES
44	LP001	LANDSCAPE AND IRRIGATION NOTES
45	LP101	RAIN GARDEN PLANTING PLAN
46	LP102	REVEGETATION PLAN

CITY OF AUSTIN, TEXAS
AUSTIN WATER

CITY OF AUSTIN — FOUNDED 1839

SOUTH AUSTIN REGIONAL WASTEWATER TREATMENT PLANT ELECTRICAL SUBSTATION NO. 1 REPLACEMENT

1017 FALWELL LANE DEL VALLE, TEXAS 78617

C.I.P PROJECT NO. 3333.032
CLMC XXX

Austin WATER

PROJECT ADDRESS:
1017 FALLWELL LN
AUSTIN, TX 78617

AUSTIN WATER UTILITY EXPIRATION DATE
JUN 05 2022

ENGINEER:
HARUTUNIAN ENGINEERING, INC.
305 EAST HUNTLAND DRIVE, SUITE 500
AUSTIN, TX 78752
(512) 454-2788

CAS CONSULTING AND SERVICES, INC.
7908 CAMERON ROAD
AUSTIN, TX 78754
(512) 836-2388

OWNER:
CITY OF AUSTIN
STEVE PARKS, P.E.
PROJECT MANAGER
505 BARTON SPRINGS ROAD
AUSTIN, TX 78704
(512) 974-3576

SITE PLAN RELEASE NOTES:

A) ALL IMPROVEMENTS SHALL BE MADE IN ACCORDANCE WITH THE RELEASED SITE PLAN. ANY ADDITIONAL IMPROVEMENTS WILL REQUIRE SITE PLAN AMENDMENT AND APPROVAL OF THE DEVELOPMENT SERVICES DEPARTMENT.

B) APPROVAL OF THIS SITE PLAN DOES NOT INCLUDE BUILDING AND FIRE CODE APPROVAL NOR BUILDING PERMIT APPROVAL.

C) ALL SIGNS MUST COMPLY WITH REQUIREMENTS OF THE LAND DEVELOPMENT CODE (CHAPTER 25–10).

D) ADDITIONAL ELECTRIC EASEMENTS MAY BE REQUIRED AT A LATER DATE.

E) WATER AND WASTEWATER SERVICE WILL BE PROVIDED BY THE CITY OF AUSTIN.

F) ALL EXISTING STRUCTURES SHOWN TO BE REMOVED WILL REQUIRE A DEMOLITION PERMIT FROM THE CITY OF AUSTIN DEVELOPMENT SERVICES DEPARTMENT.

G) A DEVELOPMENT PERMIT MUST BE ISSUED PRIOR TO AN APPLICATION FOR BUILDING PERMIT FOR NON–CONSOLIDATED OR PLANNING COMMISSION APPROVED SITE PLANS.

H) FOR DRIVEWAY CONSTRUCTION: THE OWNER IS RESPONSIBLE FOR ALL COSTS FOR RELOCATION OF, OR DAMAGE TO UTILITIES.

NOTES:

1. CONTRACTOR SHALL NOTIFY THE PUBLIC WORKS DEPARTMENT 24 HOURS PRIOR TO STARTING CONSTRUCTION OR CLEARING OPERATIONS.
2. RELEASE OF THIS APPLICATION DOES NOT CONSTITUTE A VERIFICATION OF ALL DATA, INFORMATION AND CALCULATIONS SUPPLIED BY THE APPLICANT. THE ENGINEER OF RECORD IS SOLELY RESPONSIBLE FOR THE COMPLETENESS, ACCURACY AND ADEQUACY OF HIS/HER SUBMITTAL, WHETHER OR NOT THE APPLICATION IS REVIEWED FOR CODE COMPLIANCE BY CITY ENGINEERS.
3. THIS PROJECT IS LOCATED WITHIN THE COLORADO RIVER & ONION CREEK WATERSHED CLASSIFIED AS SUBURBAN WATERSHED AND SHALL BE DEVELOPED, CONSTRUCTED AND MAINTAINED IN ACCORDANCE WITH CHAPTER 25 OF THE CODE OF THE CITY OF AUSTIN.
4. NO PORTION OF THIS SITE IS LOCATED WITHIN PARKLAND OR LAND USED FOR PARK PURPOSES.
5. THE PROPOSED FACILITIES ARE NOT LOCATED WITHIN THE 100–YEAR FLOODPLAIN AS SHOWN ON FEMA MAP NO. 48453C0630K, DATED JANUARY 6, 2016. IT IS IN THE COA 100–YEAR FLOODPLAIN.
6. THIS PROJECT IS NOT WITHIN THE EDWARDS AQUIFER RECHARGE ZONE AS DEFINED BY THE CITY OF AUSTIN. THIS PROJECT IS NOT WITHIN THE EDWARDS AQUIFER RECHARGE ZONE AS REGULATED BY THE TEXAS COMMISSION ON ENVIRONMENTAL QUALITY (TCEQ).
7. THERE ARE NO CRITICAL ENVIRONMENTAL FEATURES WITHIN 150–FEET OF ANY PORTION OF THIS PROJECT. A FIELD INVESTIGATION HAS NOT BEEN PERFORMED AS A PART OF THIS PROJECT AND IS NOT REQUIRED.
8. LEGAL DESCRIPTION: ABS 24 DEL VALLE S ACR 109.20 & ABS 24 DEL VALLE S ACR 201.61
9. APPROVAL OF THESE PLANS BY THE CITY OF AUSTIN INDICATES COMPLIANCE WITH APPLICABLE CITY REGULATIONS ONLY. COMPLIANCE WITH ACCESSIBILITY STANDARDS SUCH AS THE 2010 STANDARDS FOR ACCESSIBLE DESIGN OR THE 2012 TEXAS ACCESSIBILITY STANDARDS WAS NOT VERIFIED. THE APPLICANT IS RESPONSIBLE FOR COMPLIANCE WITH ALL APPLICABLE ACCESSIBILITY STANDARDS. APPROVAL BY OTHER GOVERNMENTAL ENTITIES MAY BE REQUIRED PRIOR TO THE START OF CONSTRUCTION. THE APPLICANT IS RESPONSIBLE FOR DETERMINING WHAT ADDITIONAL APPROVALS MAY BE NECESSARY.

REVISIONS/CORRECTIONS

NUMBER	DESCRIPTION	REVISE (R) ADD (A) VOID (V) SHEET NO.'S	TOTAL # SHEETS IN PLAN SET	NET CHANGE IMP. COVER (SQ.FT.)	TOTAL SITE IMP. COVER (SQ.FT.)/%	CITY OF AUSTIN APPROVAL–DATE	DATE IMAGED

MAYOR
STEVE ADLER

CITY COUNCIL
ORA HOUSTON, DISTRICT 1
DELIA GARZA, DISTRICT 2
SABINO RENTERIA, DISTRICT 3
GREGORIO CASAR, DISTRICT 4
ANN KITCHEN, DISTRICT 5
JIMMY FLANNIGAN, DISTRICT 6
LESLIE POOL, DISTRICT 7
ELLEN TROXCLAIR, DISTRICT 8
KATHIE TOVO, DISTRICT 9
ALISON ALTER, DISTRICT 10

CITY MANAGER
SPENCER CRONK

DIRECTOR, AUSTIN WATER
GREG MESZAROS

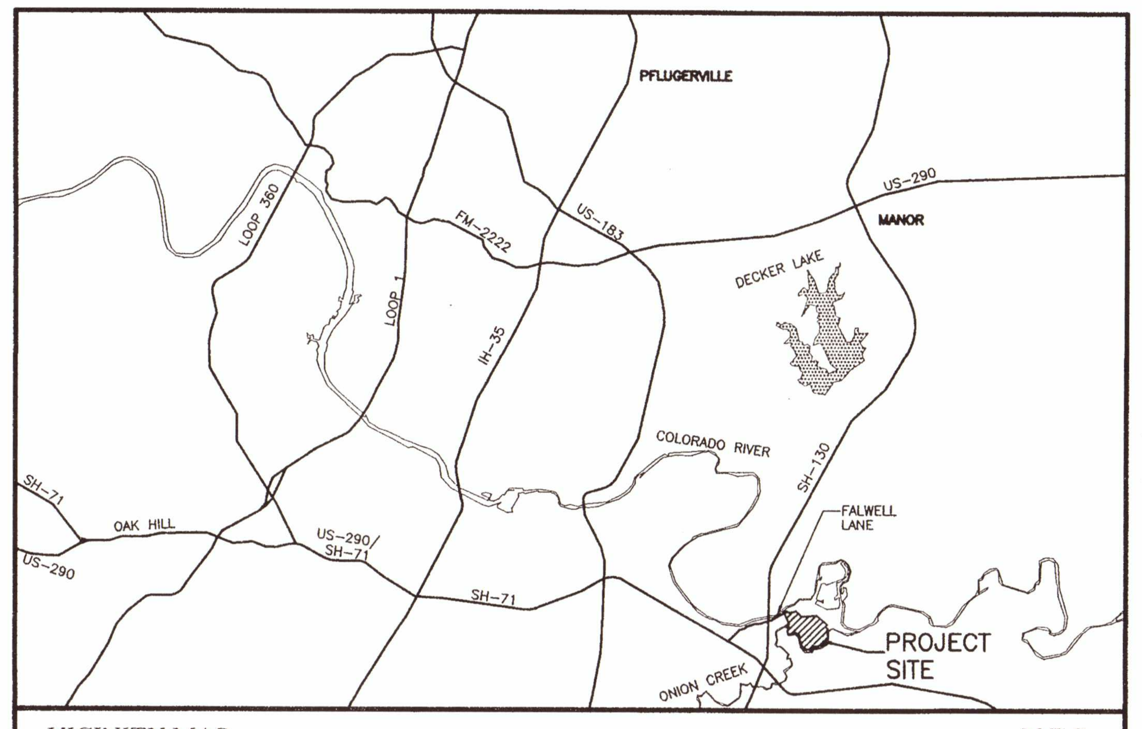

VICINITY MAP — N.T.S.
CITY GRID: Q-17
MAPSCO: 648-P
COLORADO & ONION CREEK WATERSHED CLASSIFICATION: SUBURBAN

NOTES:

ON MAY 7, 2019, THE DIRECTOR OF THE WATERSHED PROTECTION DEPARTMENT GRANTED A VARIANCE FROM THE FOLLOWING SECTION OF THE LAND DEVELOPMENT CODE:

(A) THE RESTRICTION ON CONSTRUCTION OF A BUILDING IN THE 25-YEAR AND 100-YEAR FLOODPLAINS PRESCRIBED BY CITY CODE SECTION 25-7-92 (ENCROACHMENT ON FLOODPLAIN PROHIBITED);

THE VARIANCE GRANTED IS EFFECTIVE ONLY IF:

(A) THE APPLICANT SUBMITS A COMPLETED ELEVATION CERTIFICATE CERTIFYING THE ELEVATION OF THE FINISHED FLOOR OF THE BUILDING IS AT OR ABOVE THE FINISHED FLOOR ELEVATION PROPOSED BY THIS APPROVED SITE PLAN APPLICATION, SIGNED BY A PROFESSIONAL LAND SURVEYOR, ENGINEER, OR ARCHITECT AUTHORIZED BY LAW TO CERTIFY ELEVATIONS, BEFORE THE CITY MAY ISSUE A CERTIFICATE OF COMPLIANCE FOR THE BUILDING.

(B) BEFORE THE CITY MAY ISSUE A CERTIFICATE OF COMPLIANCE FOR THE BUILDING, THE APPLICANT SHALL FINALIZE WITH THE CITY ATTORNEY A DECLARATION OF USE FOR DRAINAGE IN A MANNER ACCEPTABLE TO THE WATERSHED PROTECTION DEPARTMENT WHICH CONTAINS ALL OF THE FLOODWATERS FROM THE 100-YEAR FLOODPLAIN AT TIME OF SITE PLAN APPLICATION APPROVAL.

PLEASE CONTACT HENRY PRICE, 512-974-1275 IN THE FLOODPLAIN OFFICE TO CONFIRM THE SUBMITTAL OF THE ELEVATION CERTIFICATE, AND DECLARATION OF USE FOR DRAINAGE PRIOR TO THE ISSUING OF A CERTIFICATE OF COMPLIANCE.

THE VARIANCE EXPIRES IF THE PROJECT FOR WHICH THIS VARIANCE IS GRANTED DOES NOT RECEIVE A BUILDING PERMIT BEFORE MAY 8, 2020.

NOTES:
AN ADMINISTRATIVE VARIANCE HAS BEEN GRANTED TO ALLOW FILL UP TO 8 FEET IN THE DDZ PER LDC 25-8-42(B)(6).

A DRAINAGE DECLARATION OF USE MUST BE COMPLETED PRIOR TO ISSUANCE OF CERTIFICATE OF OCCUPANCY.

HARUTUNIAN ENGINEERING, INC.
305 EAST HUNTLAND DRIVE, SUITE 500
AUSTIN, TX 78752
TEXAS FIRM REGISTRATION NUMBER F-2408

IN ASSOCIATION WITH
AECOM TECHNICAL SERVICES, INC.
HVJ ASSOCIATES, INC.
JOSE I. GUERRA, INC.
MACIAS & ASSOCIATES, L.P.
MWM DESIGN GROUP

SUBMITTAL PREPARED BY:

CAS CONSULTING & SERVICES, INC.
CIVIL ENGINEERING | PROGRAM MANAGEMENT | CONSTRUCTION MANAGEMENT
7908 Cameron Road | Austin, TX 78754 | REG. NO. F-003572
Main: 512.836.2388 | Fax: 512.836.4515

STATE OF TEXAS — MICHAEL C. MERIWETHER — 58563 — LICENSED PROFESSIONAL ENGINEER

MICHAEL C. MERIWETHER, P.E. — PROJECT ENGINEER — May 31, 2019 — DATE

APPROVALS:

REVIEWED BY: AUSTIN WATER — 6/5/2019 — DATE

APPROVED BY: CITY OF AUSTIN, AUSTIN FIRE DEPARTMENT — 6/5/19 — DATE

APPROVED BY: CITY OF AUSTIN, DEVELOPMENT SERVICES DEPARTMENT — DATE

Development Services Department JUL 10 2019

SITE PLAN/DEVELOPMENT PERMIT NUMBER — DATE

SUBMITTAL DATE

SITE PLAN APPROVAL SHEET OF 46
FILE NUMBER: SP-2018-0189C APPLICATION DATE: 04/26/2018
APPROVED BY COMMISSION ON 7.5.19 UNDER SECTION 112
OF CHAPTER 25-5 OF THE CITY OF AUSTIN CODE.
EXPIRATION DATE(25–5–81, LDC)______
CASE MANAGER CHRISTINE BARTON-HOLMES
PROJECT EXPIRATION DATE (ORD. #970905–A) 7.5.22
DWPZ____ DDZ____
DIRECTOR, DEVELOPMENT SERVICES DEPARTMENT
RELEASED FOR GENERAL COMPLIANCE: 7.5.19 ZONING P
Rev. 1 ______ Correction 1 ______
Rev. 2 ______ Correction 2 ______
Rev. 3 ______ Correction 3 ______
Final Plat must be recorded by the Project Expiration Date, if applicable. Subsequent Site Plans which do not comply with the Code current at the time of filing, and all required Building Permits and/or a notice of construction (if a building permit is not required), must also be approved prior to the Project Expiration Date.

SP-2018-0189C

SHEET
A-G-001A
1 OF 46

GENERAL NOTES

1. THE CONTRACT SPECIFICATIONS CONTAINED IN THE PROJECT MANUAL HAVE PRECEDENT OVER CITY OF AUSTIN SPECIFICATIONS. FOR ITEMS NOT COVERED BY THE PROJECT MANUAL SPECIFICATIONS, THE "CITY OF AUSTIN STANDARD SPECIFICATIONS" AS AMENDED BY SPECIAL PROVISION, CURRENT AT THE TIME OF BIDDING ARE TO GOVERN MATERIALS AND METHODS USED TO DO THIS WORK. UNLESS OTHERWISE NOTED, ANY REVISIONS MADE AFTER BIDDING DO NOT APPLY.
2. THE CITY SPECIFICATION ITEM 509S WILL BE REQUIRED AS A MINIMUM TRENCH SAFETY MEASURE. CONTRACT DOCUMENTS WHICH INCLUDE A TRENCH SAFETY PLAN AND A PAY ITEM FOR TRENCH SAFETY MEASURES, IN COMPLIANCE WITH TEXAS HEALTH AND SAFETY CODE, TITLE 9, CHAPTER 756, SUBCHAPTER C, MUST BE RECEIVED BY THE TRANSPORTATION AND PUBLIC SERVICES CONTRACT ADMINISTRATION OFFICE BEFORE BEGINNING WORK ON THE PROJECT.
3. ALL MATERIALS TESTS, INCLUDING SOIL DENSITY TESTS AND RELATED SOIL ANALYSES, TO BE ACCOMPLISHED BY AN INDEPENDENT LABORATORY FUNDED BY THE CITY OF AUSTIN, UNLESS NOTED OTHERWISE.
4. CONTRACTOR TO TAKE ALL DUE PRECAUTIONS TO PROTECT EXISTING FACILITIES FROM DAMAGE. CONCEALED AND BURIED FACILITIES (PIPING, CONDUIT, DUCTBANK, ETC.) ARE NOT EXEMPT FROM THIS REQUIREMENT. CONTRACTOR IS TO UTILIZE ALL APPLICABLE METHODS AND TECHNOLOGIES TO ENSURE THE EXISTING FACILITIES ARE IDENTIFIED, LOCATED AND PROTECTED. ANY DAMAGE TO EXISTING FACILITIES INCURRED AS A RESULT OF THESE CONSTRUCTION OPERATIONS TO BE REPAIRED IMMEDIATELY BY THE CONTRACTOR, AT NO ADDITIONAL COST TO OWNER.
5. CONTRACTOR TO GIVE A MINIMUM OF 48 HOURS NOTICE TO ALL AUTHORIZED INSPECTORS, SUPERINTENDENTS, OR PERSONS IN CHARGE OF PRIVATE AND PUBLIC UTILITIES AFFECTED BY HIS OPERATIONS PRIOR TO COMMENCEMENT OF WORK. CONTRACTOR TO ASSURE HIMSELF THAT ALL CONSTRUCTION PERMITS HAVE BEEN OBTAINED PRIOR TO COMMENCEMENT OF WORK. REQUIRED PERMITS THAT CAN ONLY BE ISSUED TO CONTRACTOR TO BE OBTAINED AT HIS EXPENSE.
6. CONTRACTOR TO COMPLY WITH ALL APPLICABLE LOCAL, STATE, AND FEDERAL REQUIREMENTS REGARDING EXCESS AND WASTE MATERIAL, INCLUDING METHODS OF HANDLING AND DISPOSAL.
7. CONTRACTOR TO COORDINATE INTERRUPTIONS OF ALL UTILITIES AND SERVICES. ALL WORK TO BE IN ACCORDANCE WITH THE REQUIREMENTS OF THE APPLICABLE UTILITY COMPANY OR AGENCY INVOLVED.
8. INTERRUPTION OF WATER FLOWS THROUGH EXISTING PROCESS FACILITIES IS NOT PERMITTED WITHOUT PRIOR WRITTEN APPROVAL. SUBMIT TO ENGINEER CONSTRUCTION PLAN WHICH DETAILS SCHEDULE AND TECHNIQUES TO BE USED FOR REVIEW PRIOR TO ANY CONNECTIONS TO EXISTING PIPES OR STRUCTURES. PARTIAL INTERRUPTION OF FLOWS IS TO BE SCHEDULED DURING LOW FLOW PERIODS FOR AS SHORT A DURATION AS PRACTICAL. MAKE PROVISIONS FOR ACCOMMODATING PEAK FLOWS WHICH MAY OCCUR DURING CONSTRUCTION OPERATIONS. ENGINEER AND PLANT SUPERINTENDENT TO BE NOTIFIED WHEN ANY INTERRUPTIONS ARE TO BE MADE.
9. LOCATION OF EXISTING PIPING UTILITIES SHOWN ON PLANS WAS COMPILED FROM RECORD INFORMATION AND SOME SUBSURFACE UTILITY ENGINEERING DATA. NO WARRANTY IS IMPLIED AS TO THE ACTUAL LOCATION.
10. WHEN UNLOCATED OR INCORRECTLY LOCATED UNDERGROUND PIPING, OR A BREAK LOCATED IN THE LINE, OR OTHER UTILITIES AND SERVICES ARE ENCOUNTERED DURING SITE WORK OPERATIONS, NOTIFY THE APPLICABLE UTILITY COMPANY IMMEDIATELY TO OBTAIN PROCEDURE DIRECTIONS. COOPERATE WITH THE APPLICABLE UTILITY COMPANY IN MAINTAINING ACTIVE SERVICES IN OPERATION.
11. CONTRACTOR TO LOCATE, PROTECT, AND MAINTAIN BENCHMARKS, MONUMENTS, CONTROL POINTS, AND PROJECT ENGINEERING REFERENCE POINTS. REESTABLISH DISTURBED OR DESTROYED ITEMS BY REGISTERED PUBLIC SURVEYOR IN THE STATE OF TEXAS, AT NO ADDITIONAL COST TO OWNER.
12. CONTRACTOR TO CONTROL DUST CAUSED BY THE WORK AND COMPLY WITH POLLUTION CONTROL REGULATIONS OF GOVERNING AUTHORITIES.
13. THROUGHOUT THE CONSTRUCTION, AND AT THE COMPLETION OF CONSTRUCTION, THE CONTRACTOR TO ENSURE THAT DRAINAGE OF STORM WATER RUNOFF IS NOT BLOCKED.
14. THESE PLANS, PREPARED BY THE ENGINEER. DO NOT EXTEND TO OR INCLUDE DESIGNS OR SYSTEMS PERTAINING TO THE SAFETY OF THE CONSTRUCTION CONTRACTOR OR ITS EMPLOYEES, AGENTS, OR REPRESENTATIVES IN THE PERFORMANCE OF THE WORK. THE SEAL OF ENGINEER'S REGISTERED PROFESSIONAL ENGINEER(S) HEREON DOES NOT EXTEND TO ANY SUCH SAFETY SYSTEMS THAT MAY NOW OR HEREAFTER BE INCORPORATED INTO THESE PLANS. THE CONSTRUCTION CONTRACTOR TO PREPARE OR OBTAIN THE APPROPRIATE SAFETY SYSTEMS.
15. CONTRACTOR TO KEEP ACCESS ROAD TO EXISTING PLANT OPEN AT ALL TIMES. AREA USED FOR CONTRACTOR'S PERSONNEL PARKING, MATERIAL STORAGE, STOCKPILE, MATERIAL FABRICATION, AND RELATED CONSTRUCTION USES WILL NOT BE ALLOWED TO INTERFERE WITH NORMAL PLANT OPERATION, UNLESS OTHERWISE APPLIED BY THE CONTRACTOR AND APPROVED BY THE OWNER.
16. BLASTING IS NOT ALLOWED ON THIS PROJECT.
17. BURNING IS NOT ALLOWED ON THIS PROJECT.
18. REFER TO LOCATION KEY MAP DRAWING FOR LOCATION OF BENCHMARKS.
19. PLANT COORDINATES SHOWN FOR STRUCTURE LOCATIONS ARE REFERENCED TO OUTSIDE FACE OF EXTERIOR WALL AT GRADE OR TO CENTERLINE OF STRUCTURE, UNLESS NOTED OTHERWISE ON PLANS.

GENERAL NOTES (CONTINUED)

20. THE FINISHED GRADE ELEVATIONS SHOWN ARE INTENDED TO PROVIDE DRAINAGE AWAY FROM THE FACILITIES. MINOR FIELD CHANGES MAY BE NECESSARY TO PROVIDE ADEQUATE DRAINAGE. GRADE UNIFORMLY BETWEEN ELEVATIONS SHOWN TO PROVIDE DRAINAGE.
21. MAINTAIN DRAINAGE OF SITE DURING ALL PHASES OF CONSTRUCTION; DO NOT BLOCK DRAINAGE FROM ADJACENT AREAS NOR ADD FLOW TO ADJACENT AREAS.
22. ALL EXCESS EXCAVATED MATERIAL AND SOIL TO BECOME PROPERTY OF CONTRACTOR AND TO BE REMOVED FROM SITE. NO DISPOSAL IS PERMITTED IN THE 100-YEAR FLOOD PLAIN OR WATERS OF THE U.S. OF ANY SITE WITHOUT PROPER PERMITTING BY THE CONTRACTOR.
23. THE ATTENTION OF ALL PROSPECTIVE BIDDERS IS DIRECTED TO THE STATE LAW, VERNON'S ANNOTATED TEXAS STATUTES, ARTICLE 1436 (C) AND THE NEED FOR EFFECTIVE PRECAUTIONARY MEASURES WHEN OPERATING IN THE VICINITY OF ELECTRICAL LINES. IF THE CONTRACTOR CHOOSES TO USE EQUIPMENT WITH THE POTENTIAL OF COMING WITHIN THE DISTANCES PROSCRIBED BY STATUTE, THE CONTRACTOR IS RESPONSIBLE FOR COORDINATION OF THE WORK WITH THE APPROPRIATE ELECTRIC UTILITY COMPANY. ALL COSTS ASSOCIATED WITH THIS EFFORT ARE TO BE BORN BY CONTRACTOR.
24. ALL SITE WORK MUST COMPLY WITH ENVIRONMENTAL REQUIREMENTS.
25. ANY EXISTING PAVEMENT, CURBS, AND/OR SIDEWALK DAMAGED OR REMOVED BY THE CONTRACTOR ARE TO BE REPAIRED BY THE CONTRACTOR TO AT LEAST THE PRE-EXISTING CONDITION AT HIS EXPENSE BEFORE ACCEPTANCE OF THE WORK.
26. UPON COMPLETION OF THE PROJECT SITE IMPROVEMENTS AND PRIOR TO THE INSTALLATION OF AN ELECTRIC OR WATER METER, THE ENGINEER SHALL CERTIFY IN WRITING THAT THE PROPOSED DRAINAGE, FILTRATION AND DETENTION FACILITIES WERE CONSTRUCTED IN ACCORDANCE WITH THE APPROVED PLANS.
27. CONTRACTOR IS ADVISED THAT THE EXISTING PAINT AND PIPE JOINTS CONTAIN LEAD. CONTRACTOR MUST COMPLY WITH ALL APPLICABLE OSHA SAFETY REQUIREMENTS TO PROTECT ITS WORKERS AND PLANT PERSONNEL AND MUST EXERCISE APPROPRIATE REGULATORY SAFETY PRECAUTIONS THROUGHOUT THE PERFORMANCE OF THIS WORK, TO INCLUDE PRECAUTIONS TO AVOID EXHAUSTING HAZARDOUS MATERIALS, PERSONNEL SAFETY, AND PROPERLY DISPOSING OF WASTE MATERIALS.
28. IN ADDITION TO THE PRE-CONSTRUCTION PHOTOGRAPHS SPECIFIED BY "SECTION 01380 – CONSTRUCTION PHOTOGRAPHS", CONTRACTOR SHALL WALK THE WORK AREAS WITH OWNER AND SHALL VIDEO RECORD THE WORKING AREAS BEFORE STARTING ANY WORK. A COPY OF THE VIDEO RECORD SHALL BE MADE AVAILABLE TO THE OWNER AFTER THE SITE WALK AND BEFORE STARTING CONSTRUCTION WORK.
29. CONTRACTOR SHALL KEEP ALL STORAGE AREAS WEED FREE AND MOWED. ALL TRASH AND DEBRIS SHALL BE REMOVED EVERY FRIDAY.
30. REPLACE EXISTING ROADWAY THAT IS CUT BY PIPE TRENCHES WITH SIMILAR ROADWAY.
31. ADJUST MANHOLE COVERS, VALVE BOXES, ELECTRICAL MANHOLES, ETC. TO MATCH PROPOSED FINISHED GRADE.
32. CONTRACTOR TO NOT OBSTRUCT DELIVERIES ON THE PLANT ACCESS ROAD. WORK WITHIN THE ACCESS ROAD MUST BE DONE IN A WAY THAT PROVIDES DELIVERY ACCESS. ACCESS ROAD CLOSURES MUST BE AGREED UPON WITH THE CITY OF AUSTIN IN ADVANCE.
33. TRAFFIC CONTROLS DURING CONSTRUCTION TO BE CONTRACTOR'S RESPONSIBILITY AND INSTALLED IN ACCORDANCE WITH THE MANUAL ON UNIFORM TRAFFIC CONTROL DEVICES.
34. DURING CONSTRUCTION, THE STORM WATER RUNOFF FROM ALL DISTURBED AREAS TO BE FILTERED BY SILT FENCES AND/OR ROCK BERMS AS SHOWN ON THE PLANS. THESE TEMPORARY EROSION AND SEDIMENTATION CONTROLS ARE TO REMAIN IN PLACE UNTIL THE DISTURBED AREAS ARE REVEGETATED AND THE AREAS HAVE BECOME PERMANENTLY STABILIZED. ALL TEMPORARY EROSION AND SEDIMENTATION CONTROLS TO BE INSPECTED PERIODICALLY FOR DAMAGE CAUSED BY CONSTRUCTION ACTIVITIES AND FOLLOWING EVERY RAINFALL. DAMAGED OR OBSTRUCTED CONTROLS TO BE REPAIRED/REPLACED AS NECESSARY TO MAINTAIN THEIR PROPER OPERATION.

AMERICANS WITH DISABILITIES ACT

THE CITY OF AUSTIN HAS REVIEWED THIS PLAN FOR COMPLIANCE WITH CITY DEVELOPMENT REGULATIONS ONLY. THE APPLICANT, PROPERTY OWNER, AND OCCUPANT OF THE PREMISES ARE RESPONSIBLE FOR DETERMINING WHETHER THE PLAN COMPLIES WITH ALL OTHER LAWS, REGULATIONS, AND RESTRICTIONS WHICH MAY BE APPLICABLE TO THE PROPERTY AND ITS USE.

STORMWATER CONSTRUCTION NOTES

1. ALL AGGREGATE USED ONSITE FOR THE CONSTRUCTION OF BERMS, STABILIZED CONSTRUCTION ENTRANCES, HAUL ROADS, SWALES OR ANY OTHER USE MUST BE NATIVE ROCK MATERIAL.
2. VOIDS FOUND ONSITE WILL BE MITIGATED IN ACCORDANCE WITH APPLICABLE REGULATIONS AND WITH VOID AND WATER FLOW MITIGATION DETAILS AND DIRECTION PROVIDED BY OWNER.
3. ALL DISTURBED AREAS MUST BE REVEGETATED IN ACCORDANCE WITH CITY OF AUSTIN STANDARD SPECIFICATION 604S.
4. PORTABLE TOILET LOCATIONS SHALL HAVE SECONDARY CONTAINMENT AND SHALL BE ANCHORED TO PREVENT OVER TURNING.

GENERAL CONSTRUCTION NOTES

1. ALL RESPONSIBILITY FOR THE ADEQUACY OF THESE PLANS REMAINS WITH THE ENGINEER WHO PREPARED THEM. IN REVIEWING THESE PLANS, THE CITY OF AUSTIN MUST RELY ON THE ADEQUACY OF THE WORK OF THE DESIGN ENGINEER.
2. CONTRACTOR SHALL CALL TEXAS 811 (811, 1-800-545-6005) FOR UTILITY LOCATIONS PRIOR TO ANY WORK IN CITY EASEMENTS OR STREET R.O.W.
3. CONTRACTOR SHALL NOTIFY THE DEPARTMENT OF PUBLIC WORKS AND TRANSPORTATION (DPWT) AT 974-7161 AT LEAST 24 HOURS PRIOR TO THE INSTALLATION OF ANY DRAINAGE FACILITY WITHIN A DRAINAGE EASEMENT OR STREET R.O.W. THE METHOD OF PLACEMENT AND COMPACTION OF BACKFILL IN THE CITY'S R.O.W. MUST BE APPROVED PRIOR TO THE START OF BACKFILL OPERATIONS.
4. ALL CONSTRUCTION OPERATIONS SHALL BE ACCOMPLISHED IN ACCORDANCE WITH APPLICABLE REGULATIONS OF THE U.S. OCCUPATIONAL SAFETY AND HEALTH ADMINISTRATION. (OSHA STANDARDS MAY BE PURCHASED FROM THE GOVERNMENT PRINTING OFFICE; INFORMATION AND RELATED REFERENCE MATERIALS MAY BE PURCHASED FROM OSHA, 611 EAST 6TH STREET, AUSTIN TEXAS.)
5. ALL SITE WORK MUST ALSO COMPLY WITH ENVIRONMENTAL REQUIREMENTS.
6. REFERENCE "KEYMAP" DRAWING FOR DESCRIPTION OF COORDINATES AND BEARING SYSTEM USED ON THIS PROJECT.
7. SURVEY INFORMATION FOR THE SOUTH AUSTIN REGIONAL WWTP PROJECT SITE WAS OBTAINED FROM MACIAS & ASSOCIATES, L.P.

REFERENCE DRAWINGS

1. RECORD DRAWINGS FROM VARIOUS PLANT PROJECTS ARE PROVIDED AS REFERENCE DRAWINGS TO SHOW EXISTING FACILITIES WITHIN THE PLANT, AT VARYING TIMELINES. THE RECORD DRAWINGS AND THE EXISTING FACILITIES ARE SHOWN WITH GRAY LINE TO DIFFERENTIATE FROM PROPOSED IMPROVEMENTS.
2. THE REFERENCE DRAWINGS INCLUDED IN THIS CONTRACT WERE SELECTED FROM PREVIOUS CONSTRUCTION CONTRACTS AND THESE DRAWINGS DEFINE WORK THAT WAS DONE DURING THOSE CONTRACTS.
3. THE WORK THAT IS PART OF THIS CONTRACT IS SHOWN WITH SOLID, BLACK LINE. CONTRACTOR TO DISREGARD ANY WORK SHOWN WITH THIN, GRAY LINE OR GRAY TEXT, SINCE THAT WORK WAS PART OF PREVIOUS CONTRACTS.
4. SOME INFORMATION ON THE REFERENCE DRAWINGS MAY BE DIFFERENT FROM THE ACTUAL FIELD CONDITIONS.
5. MORE THAN ONE REFERENCE DRAWING MAY BE USED TO SHOW EXISTING CONDITIONS OF THE SAME PLANT AREA. THESE DRAWINGS MAY SHOW DIFFERENT CONDITIONS FOR THE SAME AREA, WHICH MAY BE ATTRIBUTABLE TO THE VARYING TIMELINES. CONTRACTOR TO CHECK THE DATE DRAWINGS WERE ISSUED TO DETERMINE THE MOST RECENT CONDITIONS.
6. PARTS OF THE RECORD DRAWINGS ARE USED AS BACKGROUND TO DEPICT THE PROPOSED WORK. CONTRACTOR TO DISREGARD ANY WORK DIRECTIVES FOUND IN THE REFERENCE DRAWINGS. ACTUAL FIELD CONDITIONS MAY BE DIFFERENT FROM THE CONDITIONS SHOWN IN THE RECORD DRAWINGS BACKGROUND.
7. CONTRACTOR TO FIELD VERIFY INSTALLED CONDITIONS IMPACTING OR IMPACTED BY HIS WORK PRIOR TO INITIATING WORK.

PIPING NOTES

1. PRESSURE RATING OF VALVES, FITTINGS, AND APPURTENANCES IS TO EQUAL OR EXCEED PRESSURE RATING OF ADJACENT PIPELINE.
2. THE CONTRACTOR TO PROVIDE FITTINGS, PLUGS, AND OTHER DEVICES FOR USE IN FILLING, FLUSHING, TESTING, ETC.
3. CONTRACTOR TO PROVIDE ADEQUATE THRUST BLOCKING TO WITHSTAND TEST PRESSURES.
4. DO NOT EXCEED MANUFACTURER'S RECOMMENDATION FOR CURVATURE OF LINES AND/OR DEFLECTION OF PIPE JOINTS. INSTALL JOINTS AS REQUIRED.
5. PIPELINES TO BE CONSTRUCTED OF THE MATERIALS SPECIFIED ON PLANS.
6. ALL UNDERGROUND DUCTILE IRON PIPE VALVES AND FITTINGS TO BE WRAPPED WITH AT LEAST 8-MIL POLYETHYLENE WRAP, IN ACCORDANCE WITH THE PROCEDURES SET FORTH IN AWWA C 105.
7. ALL UNDERGROUND DUCTILE IRON FITTINGS TO BE MECHANICAL JOINT, UNLESS OTHERWISE NOTED. WHERE DUCTILE IRON PIPE ENTERS STRUCTURES, CONNECT TO WALL PIPE WITH MECHANICAL JOINTS USING EPOXY-COATED NUTS AND BOLTS, UNLESS OTHERWISE NOTED ON PLANS.
8. PIPING DRAWINGS INDICATE INVERT ELEVATIONS FOR GRAVITY FLOW LINES. SLOPE PIPE UNIFORMLY BETWEEN ELEVATIONS SHOWN; NO VALLEYS OR PEAKS PERMITTED IN GRAVITY FLOW LINES. FOR OTHER PIPING, REFER TO DETAIL SHEETS FOR PIPE ELEVATIONS AT EACH STRUCTURE. SITE PIPING DRAWINGS DO NOT INDICATE VERTICAL BENDS AND TRANSITIONS. WHEN NECESSARY, MAKE VERTICAL TRANSITIONS OR FURNISH AND INSTALL VERTICAL BENDS AT NO EXTRA COST. DO NOT EXCEED MANUFACTURER'S RECOMMENDATIONS FOR CURVATURE OF LINES AND/OR DEFLECTION OF PIPE JOINTS.
9. YARD PIPE LOCATIONS SHOWN ARE APPROXIMATE. FIELD VERIFY LOCATION OF EXISTING PIPE. ARRANGE NEW PIPING AS NECESSARY TO AVOID INTERFERENCE AND PROVIDE CLEARANCES NOTED.
10. MAINTAIN MINIMUM CLEARANCE OF THREE (3) FEET FROM EDGE OF STRUCTURES TO CLOSEST EDGE OF PIPELINE ADJACENT AND PARALLEL TO EDGE OF STRUCTURE, UNLESS OTHERWISE NOTED ON PLANS.
11. PLACE PARALLEL PIPING IN COMMON TRENCH WHEN FEASIBLE, MAINTAINING MINIMUM TWO-FOOT (2') HORIZONTAL CLEARANCE.
12. UNLESS OTHERWISE INDICATED, ABOVE-GROUND FITTINGS TO BE FLANGED DUCTILE IRON.
13. DIELECTRIC CONNECTIONS TO BE PREVENTED BY USE OF NON-CONDUCTIVE GASKETS BETWEEN DISSIMILAR PIPING MATERIALS.

HANGERS AND SUPPORTS

1. CONTRACTOR IS RESPONSIBLE FOR FURNISHING, AND INSTALLING HANGERS AND SUPPORTS FOR ALL PIPING AND VALVES TO PREVENT SAGGING AND LATERAL MOVEMENT, AND TO PREVENT TRANSFERRING STRESS TO EQUIPMENT OR COUPLINGS.
2. TRAPEZE HANGERS ARE PERMITTED, PROVIDED PIPES ARE AT THE SAME ELEVATION AND PARALLEL, AND ROLLER SUPPORTS ARE PROVIDED FOR EACH PIPE.
3. PERFORATED STRAP HANGERS ARE NOT ACCEPTABLE.
4. HANGER RODS TO BE SIZED AS REQUIRED TO ADEQUATELY SUSPEND THE EQUIPMENT WITH A MINIMUM FACTOR OF SAFETY OF 2.
5. PIPE HANGERS AND SUPPORTS TO BE COATED IN ACCORDANCE WITH SPECIFICATION ITEM "PAINTING AND PROTECTIVE COATING" BEFORE INSTALLATION, UNLESS OTHERWISE NOTED ON PLANS. TWO NUTS TO BE PROVIDED (ONE FOR LOCKING PURPOSES) ON ALL HANGER RODS AND SUPPORTS.
6. ALL SUPPORTS TO BE SECURELY FASTENED.

SITE PLAN APPROVAL SHEET 2 OF 46
FILE NUMBER: SP-2018-0189C APPLICATION DATE: 04/26/2018
APPROVED BY COMMISSION ON 7-2-19 UNDER SECTION 112
OF CHAPTER 25-5 OF THE CITY OF AUSTIN CODE.
EXPIRATION DATE(25-5-81, LDC) 7-2-22
CASE MANAGER CHRISTINE BARTON-HOLMES
PROJECT EXPIRATION DATE (ORD. #970905-A)________
DWPZ______ DDZ______

DIRECTOR, DEVELOPMENT SERVICES DEPARTMENT
RELEASED FOR GENERAL COMPLIANCE: 7-3-19 ZONING P
Rev. 1 ____________ Correction 1 ____________
Rev. 2 ____________ Correction 2 ____________
Rev. 3 ____________ Correction 3 ____________
Final Plat must be recorded by the Project Expiration Date, if applicable. Subsequent Site Plans which do not comply with the Code current at the time of filing, and all required Building Permits and/or a notice of construction (if a building permit is not required), must also be approved prior to the Project Expiration Date.

Development Services Department JUL 10 2019

BAR LENGTH ON ORIGINAL DRAWING EQUALS ONE INCH, ADJUST SCALE ACCORDINGLY.

AECOM
AECOM TECHNICAL SERVICES INC.
9400 AMBERGLEN BOULEVARD
AUSTIN, TEXAS 78729
WWW.AECOM.COM
TBPE REG. NO. F-3580

STATE OF TEXAS
CASEY G. WAUTERS
93889
LICENSED PROFESSIONAL ENGINEER
5/21/19

NO.	DATE:	DESCRIPTION

HARUTUNIAN ENGINEERING INCORPORATED
TEXAS FIRM REGISTRATION NUMBER F-2408
ENGINEERING AND ENVIRONMENTAL CONSULTANTS
305 EAST HUNTLAND DRIVE SUITE 500
AUSTIN, TEXAS 78752

REUSE OF DOCUMENTS
This document, and the designs incorporated herein, is an instrument of professional service that has been developed, designed and prepared by Harutunian Engineering, Inc., and is not to be used, in whole or in part, for any other project without giving written notice to Harutunian Engineering, Inc.

DESIGNED BY:	CW
CHECKED BY:	JNB
APPROVED BY:	SGE
SUBMITTAL DATE:	MAY 2019
SCALE:	AS NOTED

SOUTH AUSTIN REGIONAL WASTEWATER TREATMENT PLANT
ELECTRICAL SUBSTATION NO. 1 REPLACEMENT PROJECT
CIP I.D.# 3333.032

GENERAL CONSTRUCTION NOTES
(SHEET 1 OF 2)

PROJECT NO: 2014-300 SHT. 2 OF 46 DWG NO. A-G-99B

SP-2018-0189C

FIRE DEPARTMENT NOTES

1. THE AUSTIN FIRE DEPARTMENT REQUIRES FINAL ASPHALT OR CONCRETE PAVEMENT ON REQUIRED ACCESS ROADS PRIOR TO THE START OF COMBUSTIBLE CONSTRUCTION. ANY OTHER METHOD OF PROVIDING "ALL-WEATHER DRIVING CAPABILITIES" SHALL BE REQUIRED TO BE DOCUMENTED AND APPROVED AS AN ALTERNATE METHOD OF CONSTRUCTION IN ACCORDANCE WITH THE APPLICABLE RULES FOR TEMPORARY ROADS OUTLINED IN THE CITY OF AUSTIN FIRE PROTECTION CRITERIA MANUAL.

2. FIRE HYDRANTS SHALL BE INSTALLED WITH THE CENTER OF THE FOUR (4) INCH OPENING (STEAMER) LOCATED AT LEAST 18 INCHES ABOVE FINISHED GRADE. THE STEAMER OPENING OF FIRE HYDRANTS SHALL FACE THE APPROVED FIRE ACCESS DRIVEWAY OR PUBLIC STREET AND SET BACK FROM THE CURB LINE(S) AN APPROVED DISTANCE, TYPICALLY THREE (3) TO SIX (6) FEET. THE AREA WITHIN THREE (3) FEET IN ALL DIRECTIONS FROM ANY FIRE HYDRANT SHALL BE FREE OF OBSTRUCTIONS, AND THE AREA BETWEEN THE STEAMER OPENING AND THE STREET OR DRIVEWAY GIVING EMERGENCY VEHICLE ACCESS SHALL BE FREE OF OBSTRUCTIONS.

3. TIMING OF INSTALLATIONS: WHEN FIRE PROTECTION FACILITIES ARE INSTALLED BY THE CONTRACTOR, SUCH FACILITIES SHALL INCLUDE SURFACE ACCESS ROADS. EMERGENCY ACCESS ROADS OR DRIVES SHALL BE INSTALLED AND MADE SERVICEABLE PRIOR TO AND DURING THE TIME OF CONSTRUCTION. WHEN THE FIRE DEPARTMENT APPROVES AN ALTERNATE METHOD OF PROTECTION, THIS REQUIREMENT MAY BE MODIFIED AS DOCUMENTED IN THE APPROVAL OF THE ALTERNATE METHOD.

4. ALL EMERGENCY ACCESS ROADWAYS AND FIRE LANES, INCLUDING PERVIOUS/DECORATIVE PAVING, SHALL BE ENGINEERED AND INSTALLED AS REQUIRED TO SUPPORT THE AXLE LOADS OF EMERGENCY VEHICLES. A LOAD CAPACITY SUFFICIENT TO MEET THE REQUIREMENTS FOR HS-20 LOADING (16 KIPS/WHEEL) AND A TOTAL VEHICLE LIVE LOAD OF 80,000 POUNDS IS CONSIDERED COMPLIANT WITH THIS REQUIREMENT.

5. FIRE LANES DESIGNATED ON SITE PLANS SHALL BE REGISTERED WITH THE CITY OF AUSTIN FIRE DEPARTMENT AND INSPECTED FOR FINAL APPROVAL.

6. THE MINIMUM VERTICAL CLEARANCE REQUIRED FOR EMERGENCY VEHICLE ACCESS ROADS OR DRIVES IS 14 FEET FOR THE FULL WIDTH OF THE ROADWAY OR DRIVEWAY.

TREE NOTES

1. SPECIAL CONSTRUCTION TECHNIQUES ECM 3.5.4(D): PRIOR TO EXCAVATION WITHIN TREE DRIPLINES OR THE REMOVAL OF TREES ADJACENT TO OTHER TREES THAT ARE TO REMAIN, MAKE A CLEAN CUT BETWEEN THE DISTURBED AND UNDISTURBED ROOT ZONES WITH A ROCK SAW OR SIMILAR EQUIPMENT TO MINIMIZE ROOT DAMAGE.

2. IN CRITICAL ROOT ZONE AREAS THAT CANNOT BE PROTECTED DURING CONSTRUCTION WITH FENCING AND WHERE HEAVY VEHICULAR TRAFFIC IS ANTICIPATED, COVER THOSE AREAS WITH A MINIMUM OF 12 INCHES OF ORGANIC MULCH TO MINIMIZE SOIL COMPACTION. IN AREAS WITH HIGH SOIL PLASTICITY GEOTEXTILE FABRIC, PER STANDARD SPECIFICATION 620S, SHOULD BE PLACED UNDER THE MULCH TO PREVENT EXCESSIVE MIXING OF THE SOIL AND MULCH. ADDITIONALLY, MATERIAL SUCH AS PLYWOOD AND METAL SHEETS, COULD BE REQUIRED BY THE CITY ARBORIST TO MINIMIZE ROOT IMPACTS FROM HEAVY EQUIPMENT. ONCE THE PROJECT IS COMPLETED, ALL MATERIALS SHOULD BE REMOVED, AND THE MULCH SHOULD BE REDUCED TO A DEPTH OF 3 INCHES.

3. PERFORM ALL GRADING WITHIN CRITICAL ROOT ZONE AREAS BY HAND OR WITH SMALL EQUIPMENT TO MINIMIZE ROOT DAMAGE.

4. WATER ALL TREES MOST HEAVILY IMPACTED BY CONSTRUCTION ACTIVITIES DEEPLY ONCE A WEEK DURING PERIODS OF HOT, DRY WEATHER. SPRAY TREE CROWNS WITH WATER PERIODICALLY TO REDUCE DUST ACCUMULATION ON THE LEAVES.

5. WHEN INSTALLING CONCRETE ADJACENT TO THE ROOT ZONE OF A TREE, USE A PLASTIC VAPOR BARRIER BEHIND THE CONCRETE TO PROHIBIT LEACHING OF LIME INTO THE SOIL.

Development Services Department
JUL 10 2019

SITE PLAN APPROVAL SHEET 3 OF 46
FILE NUMBER: SP-2018-0189C APPLICATION DATE: 04/26/2018
APPROVED BY COMMISSION ON 7-2-19 UNDER SECTION 112
OF CHAPTER 25-5 OF THE CITY OF AUSTIN CODE.
EXPIRATION DATE(25-5-81, LDC) 7-2-22
CASE MANAGER CHRISTINE BARTON-HOLMES
PROJECT EXPIRATION DATE (ORD. #970905-A)______
DWPZ______DDZ______

DIRECTOR, DEVELOPMENT SERVICES DEPARTMENT
RELEASED FOR GENERAL COMPLIANCE: 7-3-19 ZONING P
Rev. 1 ______ Correction 1 ______
Rev. 2 ______ Correction 2 ______
Rev. 3 ______ Correction 3 ______
Final Plat must be recorded by the Project Expiration Date, if applicable. Subsequent Site Plans which do not comply with the Code current at the time of filing, and all required Building Permits and/or a notice of construction (if a building permit is not required), must also be approved prior to the Project Expiration Date.

BAR LENGTH ON ORIGINAL DRAWING EQUALS ONE INCH, ADJUST SCALE ACCORDINGLY.

AECOM

AECOM TECHNICAL SERVICES INC.
9400 AMBERGLEN BOULEVARD
AUSTIN, TEXAS 78729
WWW.AECOM.COM
TBPE REG. NO. F-3580

STATE OF TEXAS
CASEY G. WAUTERS
93889
LICENSED PROFESSIONAL ENGINEER
5/24/19

NO.	DATE:	DESCRIPTION

HARUTUNIAN ENGINEERING INCORPORATED
TEXAS FIRM REGISTRATION NUMBER F-2408
ENGINEERING AND ENVIRONMENTAL CONSULTANTS
305 EAST HUNTLAND DRIVE SUITE 500
AUSTIN, TEXAS 78752

REUSE OF DOCUMENTS
This document, and the designs incorporated herein, is an instrument of professional service that has been developed, designed and prepared by Harutunian Engineering, Inc., and is not to be used, in whole or in part, for any other project without giving written notice to Harutunian Engineering, Inc.

DESIGNED BY: CW
CHECKED BY: JNB
APPROVED BY: SGE
SUBMITTAL DATE: MAY 2019
SCALE: AS NOTED

SOUTH AUSTIN REGIONAL WASTEWATER TREATMENT PLANT
ELECTRICAL SUBSTATION NO. 1 REPLACEMENT PROJECT
CIP I.D.# 3333.032

GENERAL CONSTRUCTION NOTES
(SHEET 2 OF 2)

PROJECT NO: 2014-300 SHT. 3 OF 46 DWG NO. A-G-100D

SP-2018-0189C

TBM NO. 99183-01
(AERIAL PANEL 8)
PLANT COORDINATES
N 622.84
E 4814.17
STATE PLANE SURFACE COORDINATES
N 10050665.10
E 3157950.75
(SURVEY COORDINATES)

TBM NO. 97060-03
(VERTICAL CONTROL)
ELEV. 429.18' (NAVD 88)
DESCRIPTION: FOUND TRIANGLE CUT IN CONCRETE AT EDGE OF SLAB ON SOUTH SIDE OF LIFT STATION No. 1
PLANT COORDINATES
N 231.93
E 5275.36

TBM NO. 99183-02
(AERIAL PANEL 10)
PLANT COORDINATES
N 658.65
E 5739.23
STATE PLANE SURFACE COORDINATES
N 10050060.73
E 3158652.08
(SURVEY COORDINATES)

TBM NO. 97060-04
(VERTICAL CONTROL)
ELEV. 428.67' (NAVD 88)
DESCRIPTION: FOUND TRIANGLE CUT IN CONCRETE WITH PK-NAIL AT EDGE OF SLAB ON SOUTH SIDE OF LIFT STATION No. 2
PLANT COORDINATES
N 165.19
E 6111.72

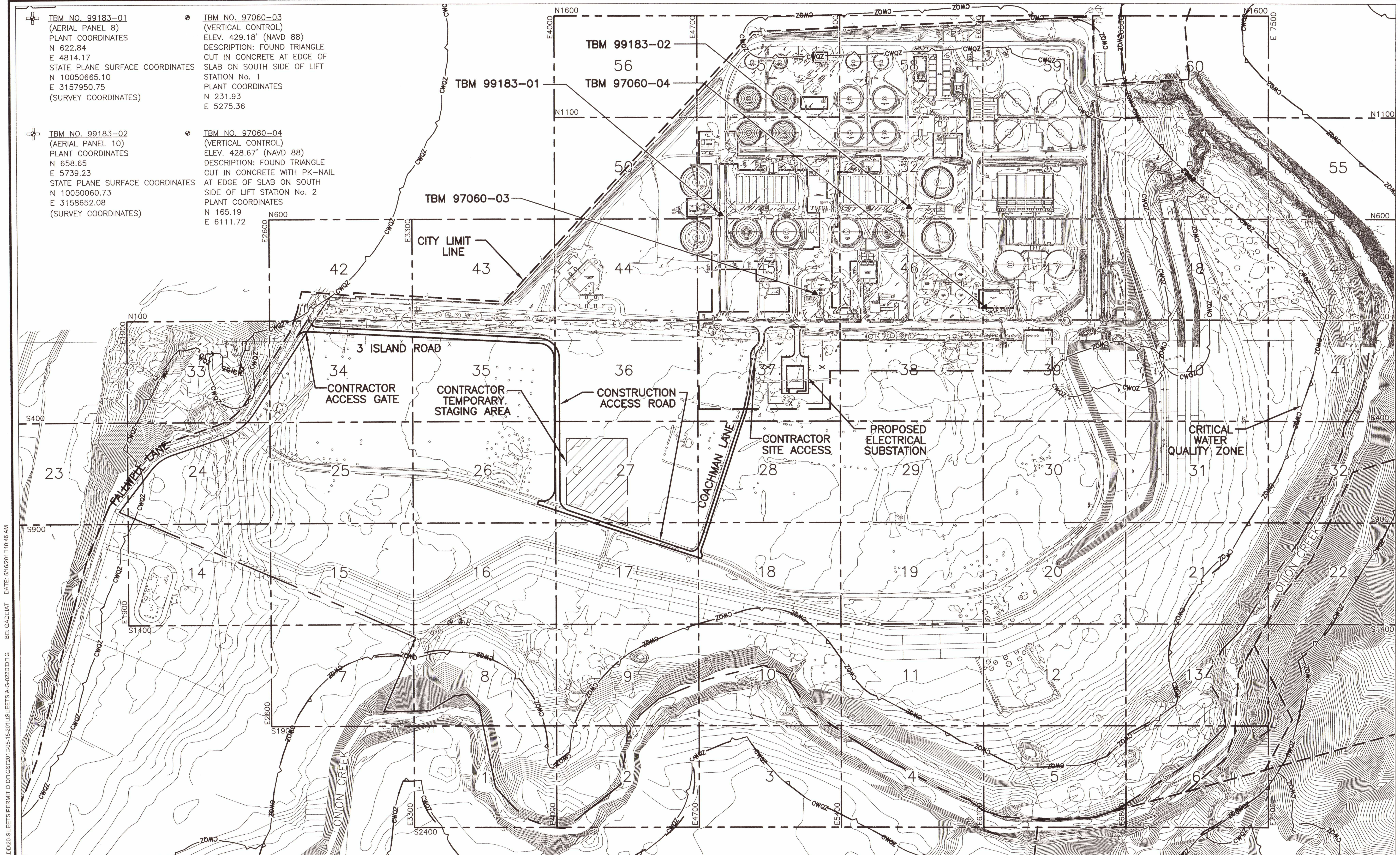

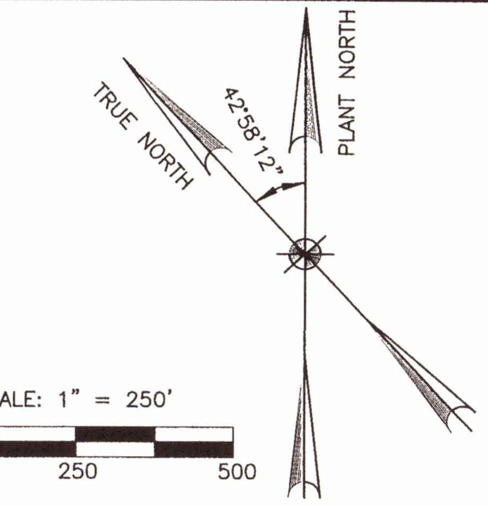

SCALE: 1" = 250'
0 250 500

LEGEND

— — —	PROPERTY LIMITS
— - —	PROJECT SHEET GRID
— — —	LIMITS OF CONSTRUCTION
——CWQZ——	CRITICAL WATER QUALITY ZONE
- - - -	CITY LIMITS

CONSTRUCTION NOTES:

1. THE GRID SHOWN ON THIS DRAWING DIVIDES THE SAR WWTP SITE INTO GEOGRAPHIC AREAS. EACH GEOGRAPHIC AREA IS DEFINED ON A PLAN DRAWING. THE PLAN DRAWING NUMBER IS THE NUMBER SHOWN ON THIS DRAWING WITHIN EACH GEOGRAPHIC AREA.
2. PLAN DRAWINGS (RECORD DRAWINGS) OF GEOGRAPHIC AREAS ARE INCLUDED IN THIS SET OF CONSTRUCTION PLANS TO PROVIDE APPROPRIATE INFORMATION TO THE CONTRACTOR. NOTE THAT NOT ALL OF THE PLAN DRAWINGS, SHOWING THE ROUTE OF CONSTRUCTION ACCESS, ARE INCLUDED IN THIS PLAN SET.
3. CONTRACTOR SHALL USE THE CONSTRUCTION ACCESS ROUTE, SHOWN ON THIS DRAWING, TO ACCESS THE SUBSTATION BUILDING SITE.

SURVEY NOTES:

1. ALL UNDERGROUND UTILITY LOCATIONS AS SHOWN ON THIS SURVEY PLAT ARE BASED ON FIELD INFORMATION AND ON THE MOST RECENT AND CURRENT INFORMATION PROVIDED BY THE UTILITY OWNER. THERE MAY BE OTHER PIPE LINES AND INSTALLATIONS IN THE AREA THAT ARE NOT SHOWN ON THIS PLAN. PRIOR TO ANY CONSTRUCTION OR EXCAVATION THE "ONE-CALL" SYSTEM SHOULD BE CONTACTED.
2. ALL SURVEY COORDINATES AND BEARINGS REFER TO THE TEXAS STATE PLANE COORDINATE SYSTEM, CENTRAL ZONE, NORTH AMERICAN DATUM OF 1983, SURFACE VALUES. (FOR TEXAS STATE PLANE GRID VALUES, MULTIPLY SURFACE VALUES BY A COMBINED SCALE FACTOR OF 0.9999600016.)
3. ELEVATIONS AND CONTOURS ARE BASED ON SOUTH AUSTIN REGIONAL WASTEWATER TREATMENT PLANT BENCHMARK TBM NO. 97060-04 WHICH IS A FOUND TRIANGLE CUT IN CONCRETE WITH PK-NAIL AT EDGE OF SLAB ON SOUTH SIDE OF LIFT STATION No. 2: NAVD 1988 ELEVATION=428.67 FT-MSL AND TBM NO. 97060-03 WHICH IS A FOUND TRIANGLE CUT IN CONCRETE AT EDGE OF SLAB ON SOUTH SIDE OF LIFT STATION No. 1: NAVD 1988 ELEVATION=429.18 FT-MSL.
4. DATE OF AERIAL PHOTOGRAPHY OF WWTP SITE 2/28/2014.
5. DATE OF SURVEY AT PROPOSED ELECTRICAL SUBSTATION 9/15/2017.

Development Services Department
JUL 10 2019

SITE PLAN APPROVAL SHEET 4 OF 46
FILE NUMBER: SP-2018-0189C APPLICATION DATE: 04/26/2018
APPROVED BY COMMISSION ON 7.2.19 UNDER SECTION 112
OF CHAPTER 25-5 OF THE CITY OF AUSTIN CODE.
EXPIRATION DATE(25-5-81, LDC) 7.2.22
CASE MANAGER CHRISTINE BARTON-HOLMES
PROJECT EXPIRATION DATE (ORD. #970905-A)______
DWPZ____ DDZ____

DIRECTOR, DEVELOPMENT SERVICES DEPARTMENT
RELEASED FOR GENERAL COMPLIANCE: 7-3-19 ZONING P
Rev. 1 ______ Correction 1 ______
Rev. 2 ______ Correction 2 ______
Rev. 3 ______ Correction 3 ______
Final Plat must be recorded by the Project Expiration Date, if applicable. Subsequent Site Plans which do not comply with the Code current at the time of filing, and all required Building Permits and/or a notice of construction (if a building permit is not required), must also be approved prior to the Project Expiration Date.

NOTE:
LOCATION OF EXISTING FACILITIES DEFINED FROM RECORD DRAWING INFORMATION. FIELD VERIFICATION OF LOCATION IS REQUIRED AT POINTS OF INTERFACE WITH EXISTING FACILITIES.

BAR LENGTH ON ORIGINAL DRAWING EQUALS ONE INCH, ADJUST SCALE ACCORDINGLY.

AECOM
AECOM TECHNICAL SERVICES INC.
9400 AMBERGLEN BOULEVARD
AUSTIN, TEXAS 78729
WWW.AECOM.COM
TBPE REG. NO. F-3580

STATE OF TEXAS
CASEY G. WAUTERS
93889
LICENSED
PROFESSIONAL ENGINEER
5/23/19

NO.	DATE:	DESCRIPTION

HARUTUNIAN ENGINEERING INCORPORATED
TEXAS FIRM REGISTRATION NUMBER F-2408
ENGINEERING AND ENVIRONMENTAL CONSULTANTS
305 EAST HUNTLAND DRIVE SUITE 500
AUSTIN, TEXAS 78752

REUSE OF DOCUMENTS
This document, and the designs incorporated herein, is an instrument of professional service that has been developed, designed and prepared by Harutunian Engineering, Inc., and is not to be used, in whole or in part, for any other project without giving written notice to Harutunian Engineering, Inc.

DESIGNED BY:	CW
CHECKED BY:	JNB
APPROVED BY:	SGE
SUBMITTAL DATE:	MAY 2019
SCALE:	1" = 250'

SOUTH AUSTIN REGIONAL WASTEWATER TREATMENT PLANT
ELECTRICAL SUBSTATION NO. 1 REPLACEMENT PROJECT
CIP I.D.# 3333.032

LOCATION KEYMAP AND CONSTRUCTION ACCESS

PROJECT NO: 2014-300 SHT. 4 OF 46 DWG NO. A-G-022D

SP-2018-0189C

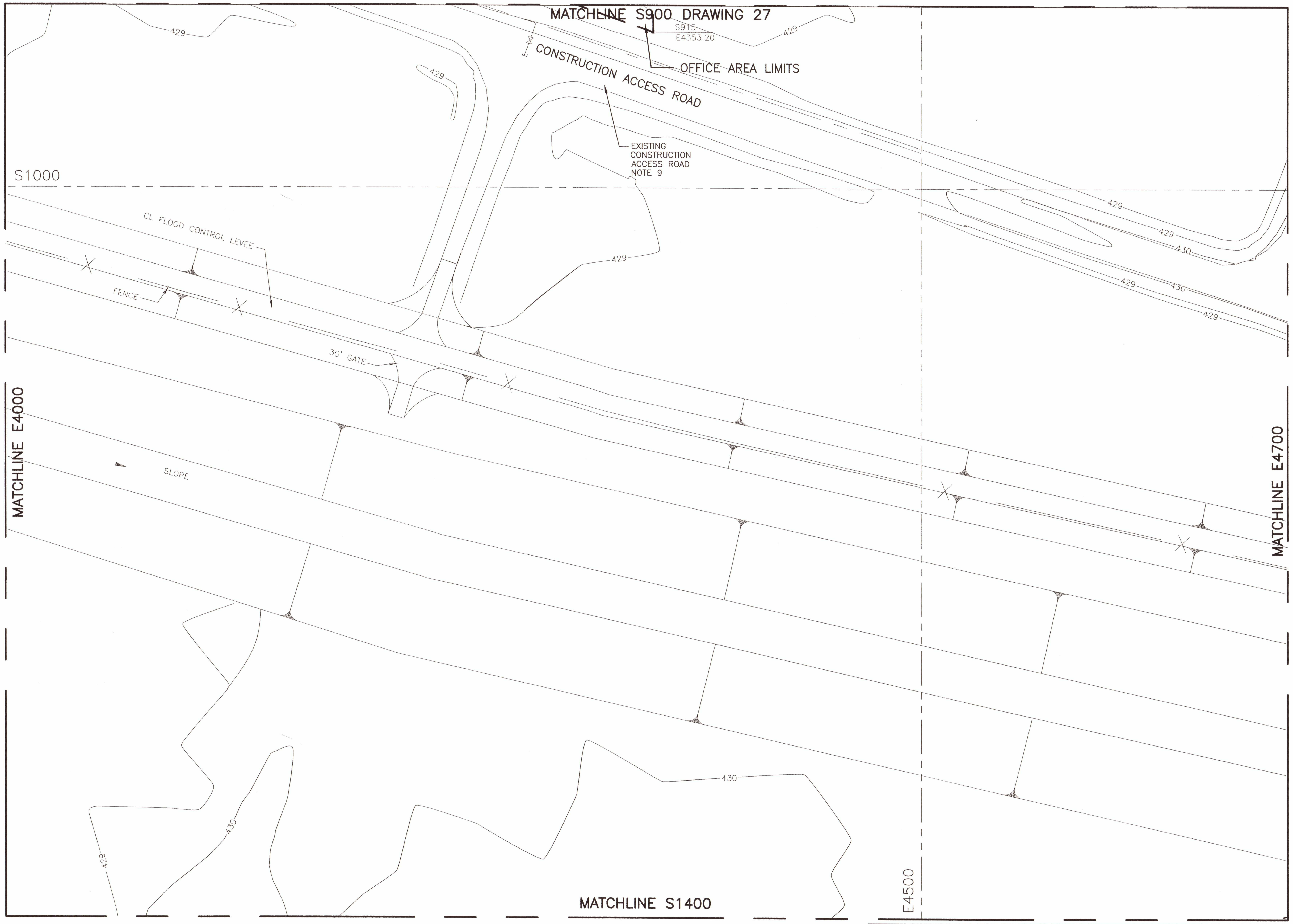

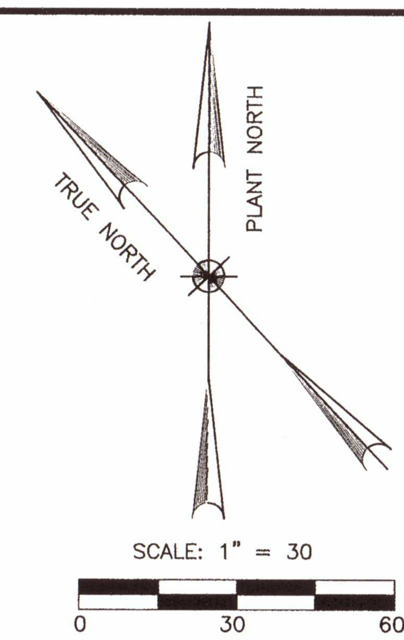

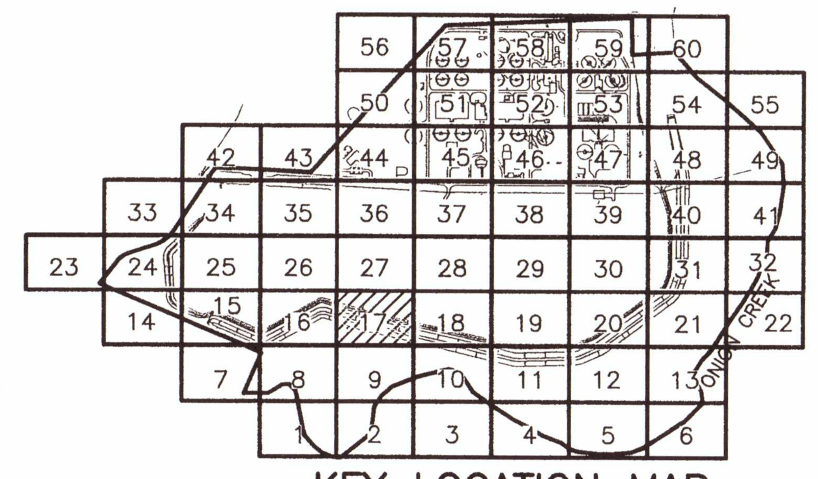

KEY LOCATION MAP
NTS

NOTES:

1. ACTUAL FIELD CONDITIONS MAY BE DIFFERENT FROM THOSE SHOWN IN THIS DRAWING. CONTRACTOR TO FIELD VERIFY INSTALLED CONDITIONS IMPACTING OR IMPACTED BY HIS WORK PRIOR TO INITIATING WORK.
2. CONTRACTOR SHALL COORDINATE THE USE OF THE EXISTING PLANT ROADS WITH THE OWNER. REFERENCE DRAWING A-G-022 FOR PROPOSED ACCESS LOCATIONS.
3. CONTRACTOR OFFICE AREA WAS PREVIOUSLY DIVIDED INTO SIX AREAS LABELED "A" THROUGH "F". ALTHOUGH SIX OFFICE AREAS ARE NO LONGER NEEDED, RECORD INFORMATION INDICATES THE OVERALL OFFICE AREA AND ASSOCIATED UTILITIES REMAIN. THIS CONTRACT IS ASSIGNED TO OFFICE AREA "A".
4. ELECTRICAL SERVICE TO AREA "A" IS AVAILABLE FROM ELECTRICAL SERVICE AND METERING STATION. CONTRACTOR IS RESPONSIBLE FOR COORDINATION AND COST ASSOCIATED WITH AUSTIN ENERGY METER INSTALLATION. CONTRACTOR IS RESPONSIBLE FOR PAYMENT OF MONTHLY ELECTRICAL SERVICE FEES. CONTRACTOR SHALL VERIFY EXISTING AND/OR INSTALL NEW CONDUIT AND ELECTRICAL FEEDERS FROM THE ELECTRICAL SERVICE AND METER STATION TO THE ASSIGNED AREA IN ACCORDANCE WITH THE APPLICABLE REQUIREMENTS OF THE CITY OF AUSTIN.
5. WATER SERVICE IS AVAILABLE TO AREA "A". CONTRACTOR IS RESPONSIBLE FOR INSTALLATION OF PIPING FROM CONSTRUCTION TRAILER TO EXISTING FACILITIES. WATER TO BE PROVIDED BY THE CITY OF AUSTIN AND IS RESTRICTED TO USE OF CONSTRUCTION OFFICE ONLY.
6. WASTEWATER SERVICE IS AVAILABLE TO AREA "A". CONTRACT IS RESPONSIBLE FOR INSTALLATION OF PIPING FROM CONSTRUCTION TRAILER TO EXISTING CLEANOUT.
7. CONTRACTOR IS RESPONSIBLE FOR COSTS ASSOCIATED WITH TELEPHONE SERVICE TO CONSTRUCTION TRAILER. ROUTE OF TELEPHONE SERVICE TO BE COORDINATED WITH ENGINEER.
8. CONSTRUCTION PERSONNEL PARKING IN CONSTRUCTION OFFICE AREA WILL BE PERMITTED AFTER COORDINATION WITH ENGINEER.
9. CONTRACTOR SHALL USE EXISITNG CONSTRUCTION ACCESS ROAD TO ACCESS THE FACILITY. NO ENTRANCE TO THE SARWWTP WILL BE ALLOWED THROUGH THE EXISITNG MAIN GATE.

SITE PLAN APPROVAL SHEET 5 OF 46
FILE NUMBER: SP-2018-0189C APPLICATION DATE: 04/26/2018
APPROVED BY COMMISSION ON 7-2-19 UNDER SECTION 112
OF CHAPTER 25-5 OF THE CITY OF AUSTIN CODE.
EXPIRATION DATE(25-5-81, LDC) 7-2-22
CASE MANAGER CHRISTINE BARTON-HOLMES
PROJECT EXPIRATION DATE (ORD. #970905-A)____
DWPZ____ DDZ____
DIRECTOR, DEVELOPMENT SERVICES DEPARTMENT
RELEASED FOR GENERAL COMPLIANCE: 7-3-19 ZONING P
Rev. 1 ____ Correction 1 ____
Rev. 2 ____ Correction 2 ____
Rev. 3 ____ Correction 3 ____
Final Plat must be recorded by the Project Expiration Date, if applicable. Subsequent Site Plans which do not comply with the Code current at the time of filing, and all required Building Permits and/or a notice of construction (if a building permit is not required), must also be approved prior to the Project Expiration Date.

Development Services Department JUL 10 2019

LEGEND

PLANT COORDINATE GRID	ELECTRICAL MANHOLE (BY OTHERS)
PROJECT SHEET GRID	
LIMITS OF CONSTRUCTION	

BAR LENGTH ON ORIGINAL DRAWING EQUALS ONE INCH, ADJUST SCALE ACCORDINGLY.

AECOM
AECOM TECHNICAL SERVICES INC.
9400 AMBERGLEN BOULEVARD
AUSTIN, TEXAS 78729
WWW.AECOM.COM
TBPE REG. NO. F-3580

STATE OF TEXAS
CASEY G. WAUTERS
93889
LICENSED PROFESSIONAL ENGINEER
5/24/19

NO.	DATE:	DESCRIPTION

HARUTUNIAN ENGINEERING INCORPORATED
TEXAS FIRM REGISTRATION NUMBER F-2408
ENGINEERING AND ENVIRONMENTAL CONSULTANTS
305 EAST HUNTLAND DRIVE SUITE 500
AUSTIN, TEXAS 78752

REUSE OF DOCUMENTS
This document, and the designs incorporated herein, is an instrument of professional service that has been developed, designed and prepared by Harutunian Engineering, Inc., and is not to be used, in whole or in part, for any other project without giving written notice to Harutunian Engineering, Inc.

DESIGNED BY:	CW
CHECKED BY:	JNB
APPROVED BY:	SGE
SUBMITTAL DATE:	MAY 2019
SCALE:	1" = 30'

SOUTH AUSTIN REGIONAL WASTEWATER TREATMENT PLANT
ELECTRICAL SUBSTATION NO. 1 REPLACEMENT PROJECT
CIP I.D.# 3333.032

DIMENSIONAL CONTROL PLAN

PROJECT NO: 2014-300 SHT. 5 OF 46 DWG NO. A-D-017C

SP-2018-0189C

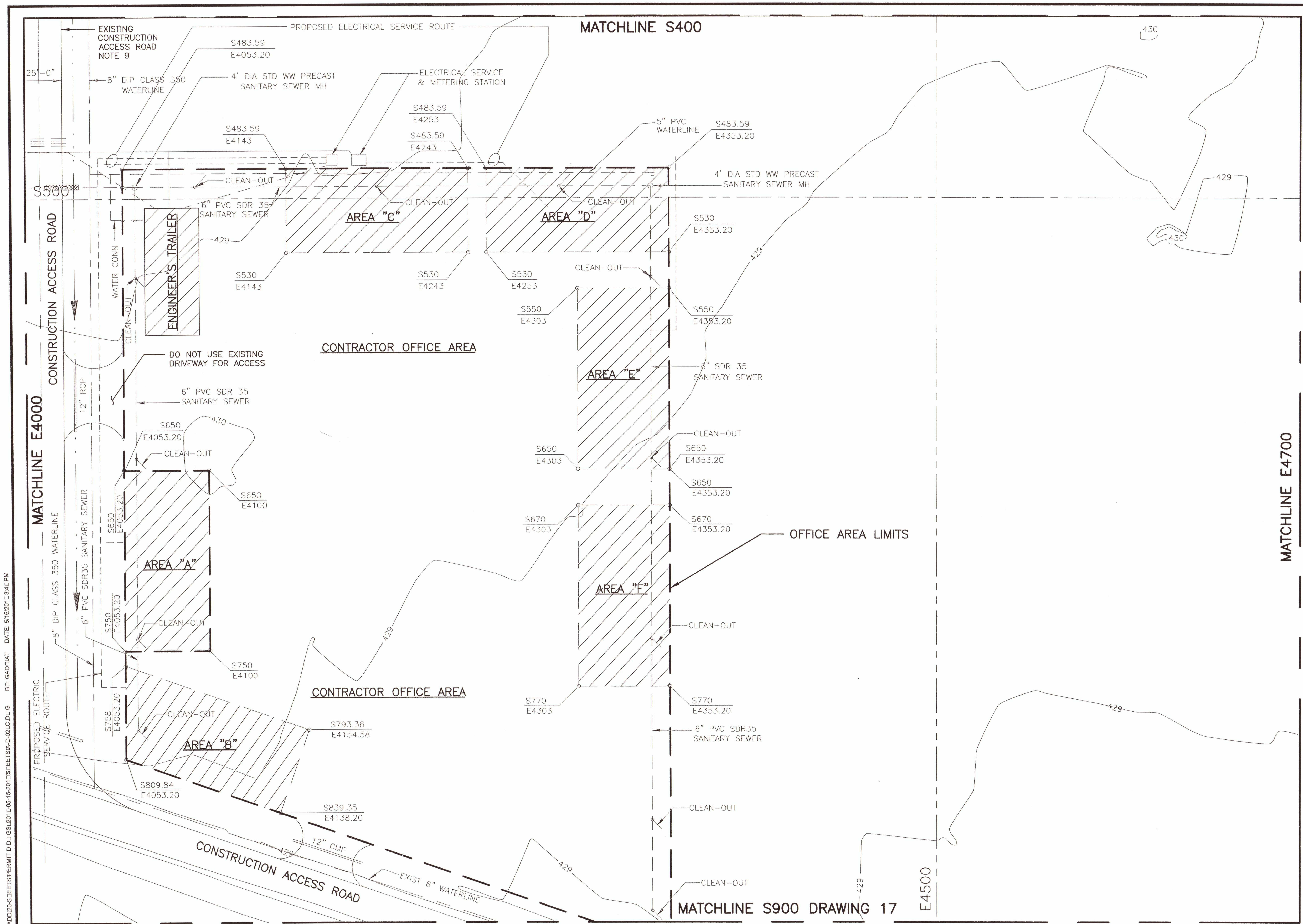

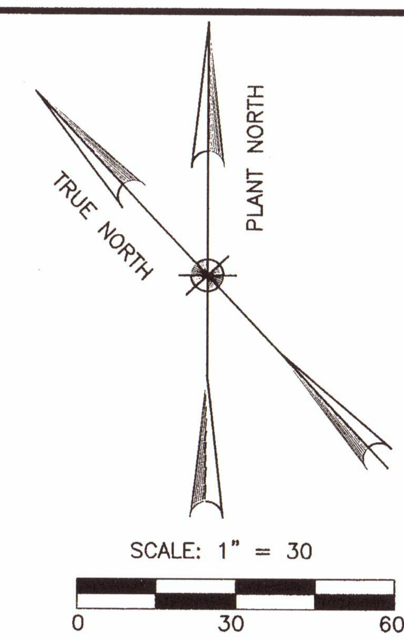

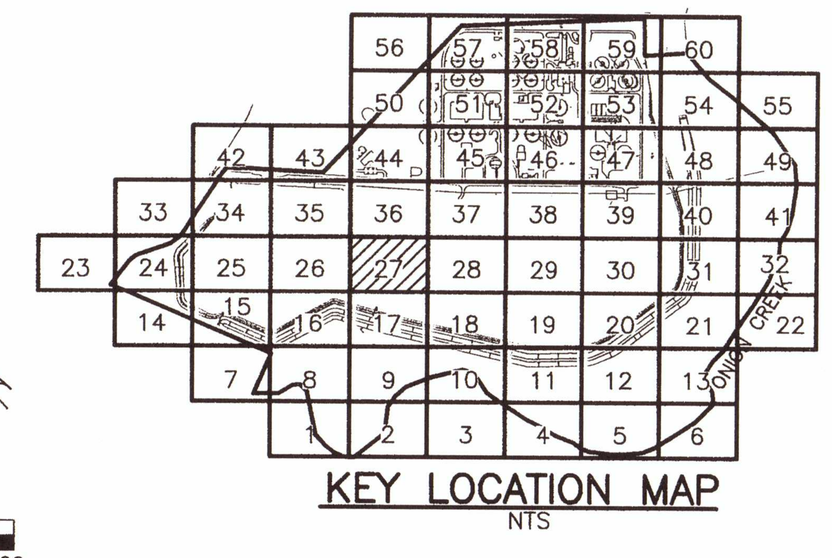

NOTES:

1. ACTUAL FIELD CONDITIONS MAY BE DIFFERENT FROM THOSE SHOWN IN THIS DRAWING. CONTRACTOR TO FIELD VERIFY INSTALLED CONDITIONS IMPACTING OR IMPACTED BY HIS WORK PRIOR TO INITIATING WORK.
2. CONTRACTOR SHALL COORDINATE THE USE OF THE EXISTING PLANT ROADS WITH THE OWNER. REFERENCE DRAWING A-G-022 FOR PROPOSED ACCESS LOCATIONS.
3. CONTRACTOR OFFICE AREA WAS PREVIOUSLY DIVIDED INTO SIX AREAS LABELED "A" THROUGH "F". ALTHOUGH SIX OFFICE AREAS ARE NO LONGER NEEDED, RECORD INFORMATION INDICATES THE OVERALL OFFICE AREA AND ASSOCIATED UTILITIES REMAIN. THIS CONTRACT IS ASSIGNED TO OFFICE AREA "A".
4. ELECTRICAL SERVICE TO AREA "A" IS AVAILABLE FROM ELECTRICAL SERVICE AND METERING STATION. CONTRACTOR IS RESPONSIBLE FOR COORDINATION AND COST ASSOCIATED WITH AUSTIN ENERGY METER INSTALLATION. CONTRACTOR IS RESPONSIBLE FOR PAYMENT OF MONTHLY ELECTRICAL SERVICE FEES. CONTRACTOR SHALL VERIFY EXISTING AND/OR INSTALL NEW CONDUIT AND ELECTRICAL FEEDERS FROM THE ELECTRICAL SERVICE AND METER STATION TO THE ASSIGNED AREA IN ACCORDANCE WITH THE APPLICABLE REQUIREMENTS OF THE CITY OF AUSTIN.
5. WATER SERVICE IS AVAILABLE TO AREA "A". CONTRACTOR IS RESPONSIBLE FOR INSTALLATION OF PIPING FROM CONSTRUCTION TRAILER TO EXISTING FACILITIES. WATER TO BE PROVIDED BY THE CITY OF AUSTIN AND IS RESTRICTED TO USE OF CONSTRUCTION OFFICE ONLY.
6. WASTEWATER SERVICE IS AVAILABLE TO AREA "A". CONTRACT IS RESPONSIBLE FOR INSTALLATION OF PIPING FROM CONSTRUCTION TRAILER TO EXISTING CLEANOUT.
7. CONTRACTOR IS RESPONSIBLE FOR COSTS ASSOCIATED WITH TELEPHONE SERVICE TO CONSTRUCTION TRAILER. ROUTE OF TELEPHONE SERVICE TO BE COORDINATED WITH ENGINEER.
8. CONSTRUCTION PERSONNEL PARKING IN CONSTRUCTION OFFICE AREA WILL BE PERMITTED AFTER COORDINATION WITH ENGINEER.
9. CONTRACTOR SHALL USE EXISITNG CONSTRUCTION ACCESS ROAD TO ACCESS THE FACILITY. NO ENTRANCE TO THE SARWWTP WILL BE ALLOWED THROUGH THE EXISITNG MAIN GATE.

SITE PLAN APPROVAL SHEET 6 OF 46
FILE NUMBER: SP-2018-0189C APPLICATION DATE: 04/26/2018
APPROVED BY COMMISSION ON n/a UNDER SECTION 112
OF CHAPTER 25-5 OF THE CITY OF AUSTIN CODE.
EXPIRATION DATE(25-5-81, LDC) 7-3-22
CASE MANAGER CHRISTINE BARTON-HOLMES
PROJECT EXPIRATION DATE (ORD. #970905-A)
DWPZ____ DDZ____

DIRECTOR, DEVELOPMENT SERVICES DEPARTMENT
RELEASED FOR GENERAL COMPLIANCE: 7/3/19 ZONING P
Rev. 1 ______ Correction 1 ______
Rev. 2 ______ Correction 2 ______
Rev. 3 ______ Correction 3 ______
Final Plat must be recorded by the Project Expiration Date, if applicable. Subsequent Site Plans which do not comply with the Code current at the time of filing, and all required Building Permits and/or a notice of construction (if a building permit is not required), must also be approved prior to the Project Expiration Date.

Development Services Department JUL 10 2019

LEGEND

PLANT COORDINATE GRID	ELECTRICAL MANHOLE (BY OTHERS)
PROJECT SHEET GRID	
LIMITS OF CONSTRUCTION	

BAR LENGTH ON ORIGINAL DRAWING EQUALS ONE INCH, ADJUST SCALE ACCORDINGLY.

AECOM TECHNICAL SERVICES INC.
9400 AMBERGLEN BOULEVARD
AUSTIN, TEXAS 78729
WWW.AECOM.COM
TBPE REG. NO. F-3580

STATE OF TEXAS
CASEY G. WAUTERS
93889
LICENSED PROFESSIONAL ENGINEER
5/28/19

NO.	DATE:	DESCRIPTION

HARUTUNIAN ENGINEERING INCORPORATED
TEXAS FIRM REGISTRATION NUMBER F-2408
ENGINEERING AND ENVIRONMENTAL CONSULTANTS
305 EAST HUNTLAND DRIVE SUITE 500
AUSTIN, TEXAS 78752

REUSE OF DOCUMENTS
This document, and the designs incorporated herein, is an instrument of professional service that has been developed, designed and prepared by Harutunian Engineering, Inc., and is not to be used, in whole or in part, for any other project without giving written notice to Harutunian Engineering, Inc.

DESIGNED BY: CW
CHECKED BY: JNB
APPROVED BY: SGE
SUBMITTAL DATE: MAY 2019
SCALE: 1" = 30'

SOUTH AUSTIN REGIONAL WASTEWATER TREATMENT PLANT
ELECTRICAL SUBSTATION NO. 1 REPLACEMENT PROJECT
CIP I.D.# 3333.032

DIMENSIONAL CONTROL PLAN

PROJECT NO: 2014-300 SHT. 6 OF 46 DWG NO. A-D-027C

SP-2018-0189C

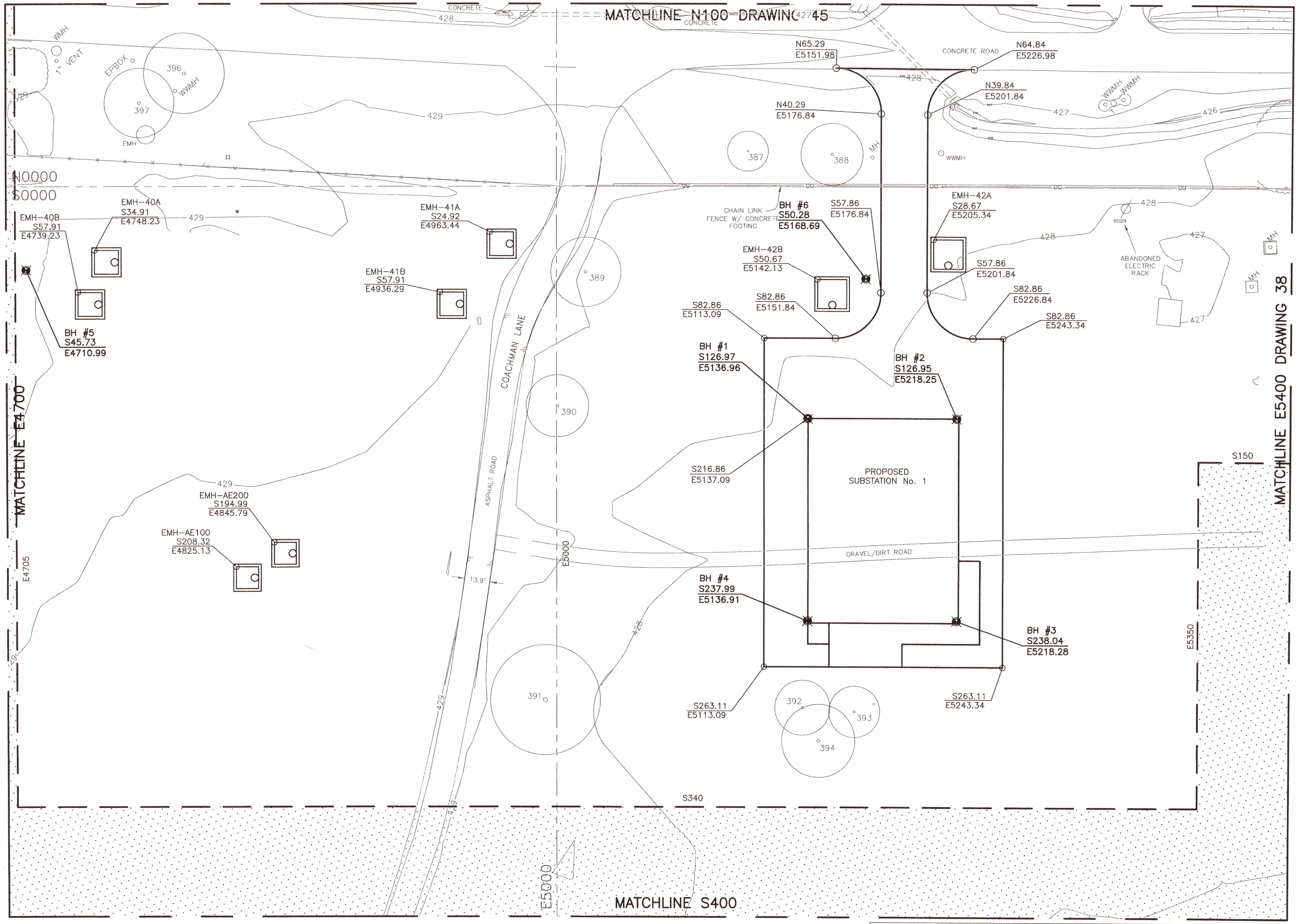

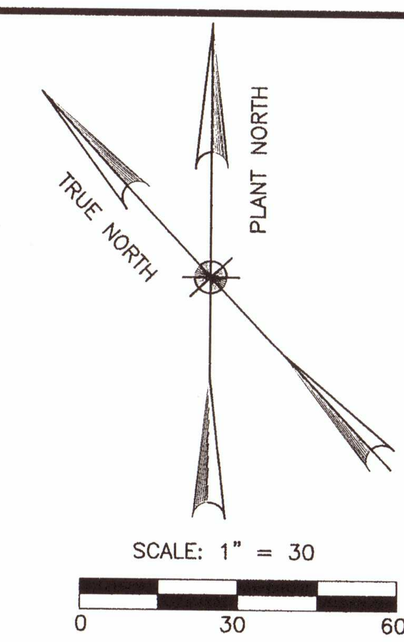

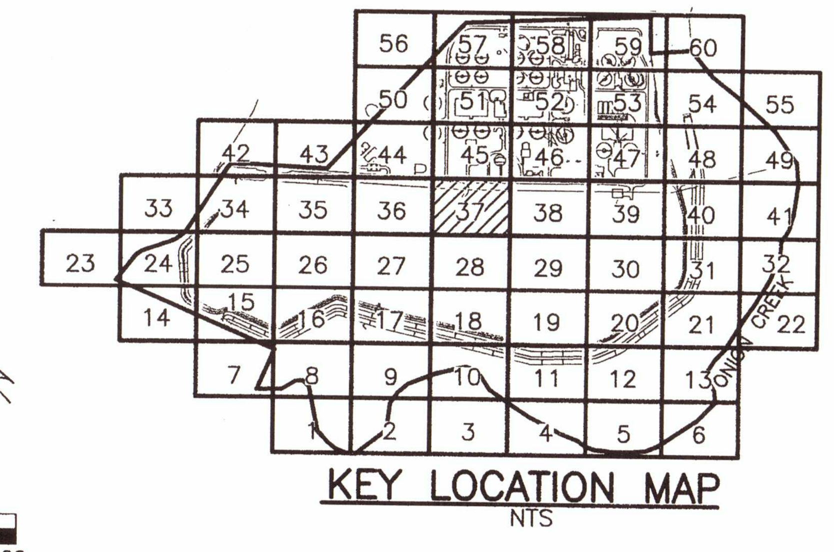

NOTES:

1. OTHER CONTRACTORS WILL BE WORKING SIMULTANEOUSLY ON THIS SITE AND SOME OF THE WORKING AREAS WILL BE SHARED BETWEEN MULTIPLE CONTRACTORS DURING THE CONTRACT WORK. REFERENCE CONTRACT DOCUMENTS FOR DETAILS REGARDING PHASING OF THE WORK AND COORDINATION WITH OTHER CONTRACTORS.
2. ACTUAL FIELD CONDITION MAY BE DIFFERENT FROM THOSE SHOWN IN THIS DRAWING. CONTRACTOR TO FIELD VERIFY INSTALLED CONDITIONS IMPACTING OR IMPACTED BY HIS WORK PRIOR TO INITIATING WORK.
3. CONTRACTOR TO COORDINATE ALL STORAGE AREAS WITH THE OWNER TO ENSURE NO ACCESS WAYS, MANHOLES OR VALVES ARE BLOCKED OR COVERED.
4. CONSTRUCTION ACCESS ROADS WILL BE USED BY MULTIPLE ON-SITE CONTRACTORS. COORDINATE USE OF THESE ROADS THROUGH THE OWNER.
5. ALL ACCESS WAYS AND DRIVEWAYS TO BE KEPT CLEAR TO ALLOW OPERATORS ACCESS TO ALL AREAS FOR MAINTENANCE AND EMERGENCIES. CONTRACTOR TO COORDINATE THE DELIVERY AND LOADING / UNLOADING OF EQUIPMENT WITH OWNER AT A MINIMUM OF 48 HOURS PRIOR TO DELIVERY.
6. CONTRACTOR TO COORDINATE THE USE OF MAIN OR ALTERNATE ENTRANCE WITH OWNER.
7. CONTRACTOR TO NOT OBSTRUCT DELIVERIES ON THE PLANT ACCESS ROAD. WORK WITHIN THE ACCESS ROAD MUST BE DONE IN A WAY THAT CAN BE COVERED TO PROVIDE DELIVERY ACCESS. ACCESS ROAD CLOSURES MUST BE AGREED UPON WITH THE CITY OF AUSTIN IN ADVANCE.

SITE PLAN APPROVAL SHEET 7 OF 46
FILE NUMBER: SP-2018-0189C APPLICATION DATE: 04/26/2018
APPROVED BY COMMISSION ON ________ UNDER SECTION 112
OF CHAPTER 25-5 OF THE CITY OF AUSTIN CODE.
EXPIRATION DATE(25-5-81, LDC) 7/4/22
CASE MANAGER CHRISTINE BARTON-HOLMES
PROJECT EXPIRATION DATE (ORD. #970905-A)________
DWPZ____ DDZ____

DIRECTOR, DEVELOPMENT SERVICES DEPARTMENT
RELEASED FOR GENERAL COMPLIANCE: 7/3/19 ZONING P
Rev. 1 ________ Correction 1 ________
Rev. 2 ________ Correction 2 ________
Rev. 3 ________ Correction 3 ________
Final Plat must be recorded by the Project Expiration Date, if applicable. Subsequent Site Plans which do not comply with the Code current at the time of filing, and all required Building Permits and/or a notice of construction (if a building permit is not required), must also be approved prior to the Project Expiration Date.

Development Services Department JUL 10 2019

LEGEND

PLANT COORDINATE GRID	ELECTRICAL MANHOLE (BY OTHERS)
PROJECT SHEET GRID	
LIMITS OF CONSTRUCTION	
AREAS OUTSIDE LOC	

BAR LENGTH ON ORIGINAL DRAWING EQUALS ONE INCH, ADJUST SCALE ACCORDINGLY.

AECOM

AECOM TECHNICAL SERVICES INC.
9400 AMBERGLEN BOULEVARD
AUSTIN, TEXAS 78729
WWW.AECOM.COM
TBPE REG. NO. F-3580

STATE OF TEXAS
CASEY G. WAUTERS
93889
LICENSED PROFESSIONAL ENGINEER
5/24/19

NO.	DATE:	DESCRIPTION

HARUTUNIAN ENGINEERING INCORPORATED
TEXAS FIRM REGISTRATION NUMBER F-2408
ENGINEERING AND ENVIRONMENTAL CONSULTANTS
305 EAST HUNTLAND DRIVE SUITE 500
AUSTIN, TEXAS 78752

REUSE OF DOCUMENTS
This document, and the designs incorporated herein, is an instrument of professional service that has been developed, designed and prepared by Harutunian Engineering, Inc., and is not to be used, in whole or in part, for any other project without giving written notice to Harutunian Engineering, Inc.

DESIGNED BY:	CW
CHECKED BY:	JNB
APPROVED BY:	SGE
SUBMITTAL DATE:	MAY 2019
SCALE:	1" = 30'

SOUTH AUSTIN REGIONAL WASTEWATER TREATMENT PLANT
ELECTRICAL SUBSTATION NO. 1 REPLACEMENT PROJECT
CIP I.D.# 3333.032

DIMENSIONAL CONTROL PLAN

PROJECT NO. 2014-300 SHT. 7 OF 46 DWG NO. A-D-037D

SP-2018-0189C

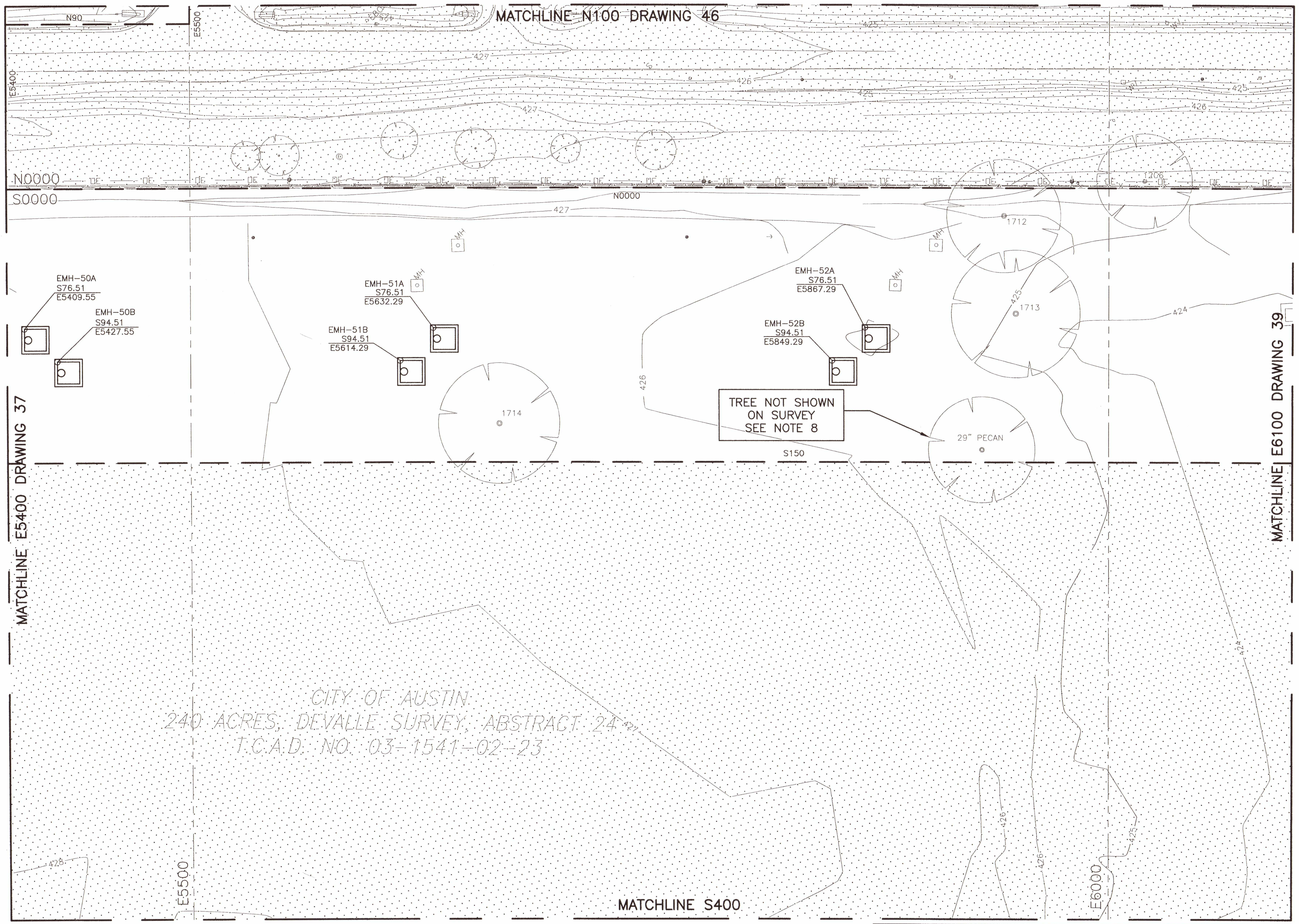

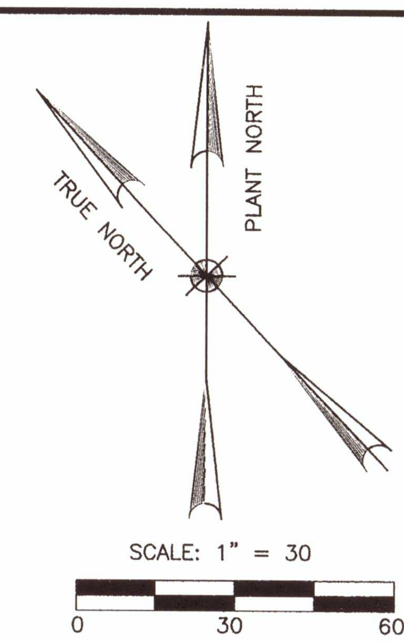

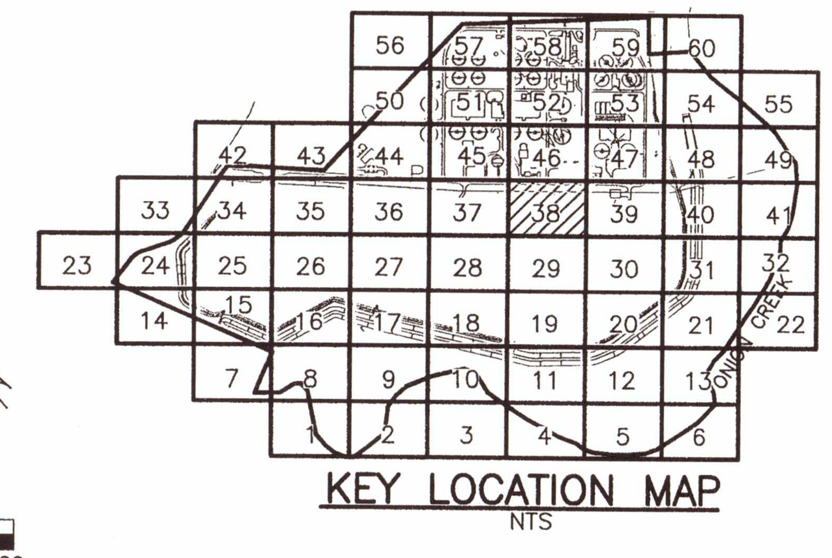

NOTES:

1. OTHER CONTRACTORS WILL BE WORKING SIMULTANEOUSLY ON THIS SITE AND SOME OF THE WORKING AREAS WILL BE SHARED BETWEEN MULTIPLE CONTRACTORS DURING THE CONTRACT WORK. REFERENCE CONTRACT DOCUMENTS FOR DETAILS REGARDING PHASING OF THE WORK AND COORDINATION WITH OTHER CONTRACTORS.
2. ACTUAL FIELD CONDITION MAY BE DIFFERENT FROM THOSE SHOWN IN THIS DRAWING. CONTRACTOR TO FIELD VERIFY INSTALLED CONDITIONS IMPACTING OR IMPACTED BY HIS WORK PRIOR TO INITIATING WORK.
3. CONTRACTOR TO COORDINATE ALL STORAGE AREAS WITH THE OWNER TO ENSURE NO ACCESS WAYS, MANHOLES OR VALVES ARE BLOCKED OR COVERED.
4. CONSTRUCTION ACCESS ROADS WILL BE USED BY MULTIPLE ON-SITE CONTRACTORS. COORDINATE USE OF THESE ROADS THROUGH THE OWNER.
5. ALL ACCESS WAYS AND DRIVEWAYS TO BE KEPT CLEAR TO ALLOW OPERATORS ACCESS TO ALL AREAS FOR MAINTENANCE AND EMERGENCIES. CONTRACTOR TO COORDINATE THE DELIVERY AND LOADING / UNLOADING OF EQUIPMENT WITH OWNER AT A MINIMUM OF 48 HOURS PRIOR TO DELIVERY.
6. CONTRACTOR TO COORDINATE THE USE OF MAIN OR ALTERNATE ENTRANCE WITH OWNER.
7. CONTRACTOR TO NOT OBSTRUCT DELIVERIES ON THE PLANT ACCESS ROAD. WORK WITHIN THE ACCESS ROAD MUST BE DONE IN A WAY THAT CAN BE COVERED TO PROVIDE DELIVERY ACCESS. ACCESS ROAD CLOSURES MUST BE AGREED UPON WITH THE CITY OF AUSTIN IN ADVANCE.
8. ADDITIONAL TREE WAS OBSERVED DURING SITE VISITS THAT DOES NOT APPEAR ON SURVEY BUT WILL REQUIRE TREE PROTECTION. CONTRACTOR SHALL CONFIRM THAT ALL PROPOSED IMPROVEMENTS DO NOT OCCUR WITHIN THE 1/2 CRITICAL ROOT ZONE. IF PROPOSED IMPROVEMENTS OCCUR WITHIN THE 1/2 CRITICAL ROOT ZONE, CONTRACTOR SHALL REVISE DUCTBANK ALIGNMENTS AND SUBMIT TO OWNER AND ENGINEER FOR APPROVAL.

SITE PLAN APPROVAL SHEET 8 OF 46
FILE NUMBER: SP-2018-0189C APPLICATION DATE: 04/26/2018
APPROVED BY COMMISSION ON ________ UNDER SECTION 112
OF CHAPTER 25-5 OF THE CITY OF AUSTIN CODE.
EXPIRATION DATE(25-5-81, LDC) 7/3/22
CASE MANAGER CHRISTINE BARTON-HOLMES
PROJECT EXPIRATION DATE (ORD. #970905-A)________
DWPZ____ DDZ____

DIRECTOR, DEVELOPMENT SERVICES DEPARTMENT
RELEASED FOR GENERAL COMPLIANCE: 7/3/19 ZONING P
Rev. 1 ________ Correction 1 ________
Rev. 2 ________ Correction 2 ________
Rev. 3 ________ Correction 3 ________
Final Plat must be recorded by the Project Expiration Date, if applicable. Subsequent Site Plans which do not comply with the Code current at the time of filing, and all required Building Permits and/or a notice of construction (if a building permit is not required), must also be approved prior to the Project Expiration Date.

Development Services Department JUL 10 2019

LEGEND

PLANT COORDINATE GRID	ELECTRICAL MANHOLE (BY OTHERS)
PROJECT SHEET GRID	
LIMITS OF CONSTRUCTION	
AREAS OUTSIDE LOC	

BAR LENGTH ON ORIGINAL DRAWING EQUALS ONE INCH, ADJUST SCALE ACCORDINGLY.

AECOM
AECOM TECHNICAL SERVICES INC.
9400 AMBERGLEN BOULEVARD
AUSTIN, TEXAS 78729
WWW.AECOM.COM
TBPE REG. NO. F-3580

STATE OF TEXAS
CASEY G. WAUTERS
93889
LICENSED
PROFESSIONAL ENGINEER
5/24/19

NO.	DATE:	DESCRIPTION

HARUTUNIAN ENGINEERING INCORPORATED
TEXAS FIRM REGISTRATION NUMBER F-2408
ENGINEERING AND ENVIRONMENTAL CONSULTANTS
305 EAST HUNTLAND DRIVE SUITE 500
AUSTIN, TEXAS 78752

REUSE OF DOCUMENTS
This document, and the designs incorporated herein, is an instrument of professional service that has been developed, designed and prepared by Harutunian Engineering, Inc., and is not to be used, in whole or in part, for any other project without giving written notice to Harutunian Engineering, Inc.

DESIGNED BY: CW
CHECKED BY: JNB
APPROVED BY: SGE
SUBMITTAL DATE: MAY 2019
SCALE: 1" = 30'

SOUTH AUSTIN REGIONAL WASTEWATER TREATMENT PLANT
ELECTRICAL SUBSTATION NO. 1 REPLACEMENT PROJECT
CIP I.D.# 3333.032

DIMENSIONAL CONTROL PLAN

PROJECT NO: 2014-300 SHT. 8 OF 46 DWG NO. A-D-038C

SP-2018-0189C

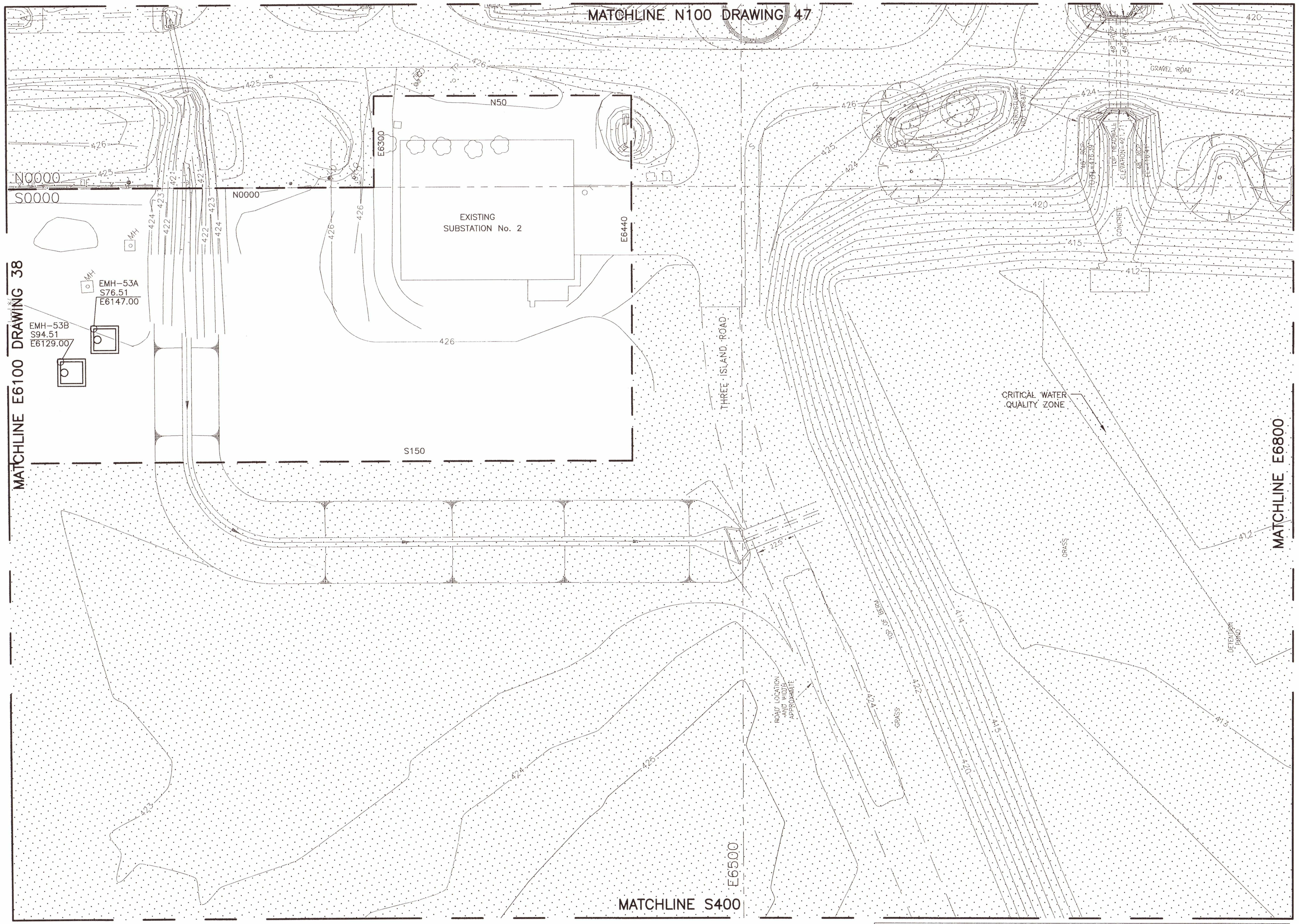

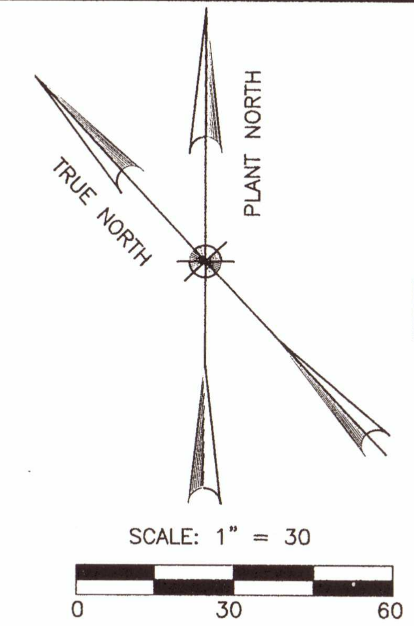

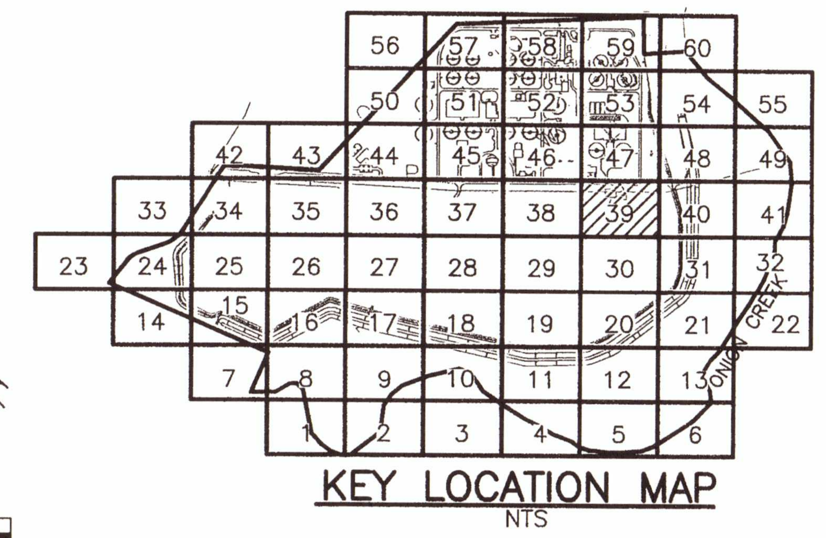

NOTES:

1. OTHER CONTRACTORS WILL BE WORKING SIMULTANEOUSLY ON THIS SITE AND SOME OF THE WORKING AREAS WILL BE SHARED BETWEEN MULTIPLE CONTRACTORS DURING THE CONTRACT WORK. REFERENCE CONTRACT DOCUMENTS FOR DETAILS REGARDING PHASING OF THE WORK AND COORDINATION WITH OTHER CONTRACTORS.
2. ACTUAL FIELD CONDITION MAY BE DIFFERENT FROM THOSE SHOWN IN THIS DRAWING. CONTRACTOR TO FIELD VERIFY INSTALLED CONDITIONS IMPACTING OR IMPACTED BY HIS WORK PRIOR TO INITIATING WORK.
3. CONTRACTOR TO COORDINATE ALL STORAGE AREAS WITH THE OWNER TO ENSURE NO ACCESS WAYS, MANHOLES OR VALVES ARE BLOCKED OR COVERED.
4. CONSTRUCTION ACCESS ROADS WILL BE USED BY MULTIPLE ON-SITE CONTRACTORS. COORDINATE USE OF THESE ROADS THROUGH THE OWNER.
5. ALL ACCESS WAYS AND DRIVEWAYS TO BE KEPT CLEAR TO ALLOW OPERATORS ACCESS TO ALL AREAS FOR MAINTENANCE AND EMERGENCIES. CONTRACTOR TO COORDINATE THE DELIVERY AND LOADING / UNLOADING OF EQUIPMENT WITH OWNER AT A MINIMUM OF 48 HOURS PRIOR TO DELIVERY.
6. CONTRACTOR TO COORDINATE THE USE OF MAIN OR ALTERNATE ENTRANCE WITH OWNER.
7. CONTRACTOR TO NOT OBSTRUCT DELIVERIES ON THE PLANT ACCESS ROAD. WORK WITHIN THE ACCESS ROAD MUST BE DONE IN A WAY THAT CAN BE COVERED TO PROVIDE DELIVERY ACCESS. ACCESS ROAD CLOSURES MUST BE AGREED UPON WITH THE CITY OF AUSTIN IN ADVANCE.

SITE PLAN APPROVAL SHEET 9 OF 46
FILE NUMBER: SP-2018-0189C APPLICATION DATE: 04/26/2018
APPROVED BY COMMISSION ON ________ UNDER SECTION 112
OF CHAPTER 25-5 OF THE CITY OF AUSTIN CODE.
EXPIRATION DATE(25-5-81, LDC) 7/3/22
CASE MANAGER CHRISTINE BARTON-HOLMES
PROJECT EXPIRATION DATE (ORD. #970905-A)________
DWPZ ____ DDZ ____

DIRECTOR, DEVELOPMENT SERVICES DEPARTMENT
RELEASED FOR GENERAL COMPLIANCE: 7/3/19 ZONING P
Rev. 1 ________ Correction 1 ________
Rev. 2 ________ Correction 2 ________
Rev. 3 ________ Correction 3 ________
Final Plat must be recorded by the Project Expiration Date, if applicable. Subsequent Site Plans which do not comply with the Code current at the time of filing, and all required Building Permits and/or a notice of construction (if a building permit is not required), must also be approved prior to the Project Expiration Date.

Development Services Department
JUL 10 2019

LEGEND

— — — — PLANT COORDINATE GRID	ELECTRICAL MANHOLE (BY OTHERS)
—— — —— PROJECT SHEET GRID	
— — — LIMITS OF CONSTRUCTION	
AREAS OUTSIDE LOC	

BAR LENGTH ON ORIGINAL DRAWING EQUALS ONE INCH, ADJUST SCALE ACCORDINGLY.

AECOM
AECOM TECHNICAL SERVICES INC.
9400 AMBERGLEN BOULEVARD
AUSTIN, TEXAS 78729
WWW.AECOM.COM
TBPE REG. NO. F-3580

STATE OF TEXAS
CASEY G. WAUTERS
93889
LICENSED PROFESSIONAL ENGINEER
5/24/19

NO.	DATE:	DESCRIPTION

HARUTUNIAN ENGINEERING INCORPORATED
TEXAS FIRM REGISTRATION NUMBER F-2408
ENGINEERING AND ENVIRONMENTAL CONSULTANTS
305 EAST HUNTLAND DRIVE SUITE 500
AUSTIN, TEXAS 78752

REUSE OF DOCUMENTS
This document, and the designs incorporated herein, is an instrument of professional service that has been developed, designed and prepared by Harutunian Engineering, Inc., and is not to be used, in whole or in part, for any other project without giving written notice to Harutunian Engineering, Inc.

DESIGNED BY: CW
CHECKED BY: JNB
APPROVED BY: SGE
SUBMITTAL DATE: MAY 2019
SCALE: 1" = 30'

SOUTH AUSTIN REGIONAL WASTEWATER TREATMENT PLANT
ELECTRICAL SUBSTATION NO. 1 REPLACEMENT PROJECT
CIP I.D.# 3333.032

DIMENSIONAL CONTROL PLAN

PROJECT NO: 2014-300 SHT. 9 OF 46 DWG NO. A-D-039C

SP-2018-0189C

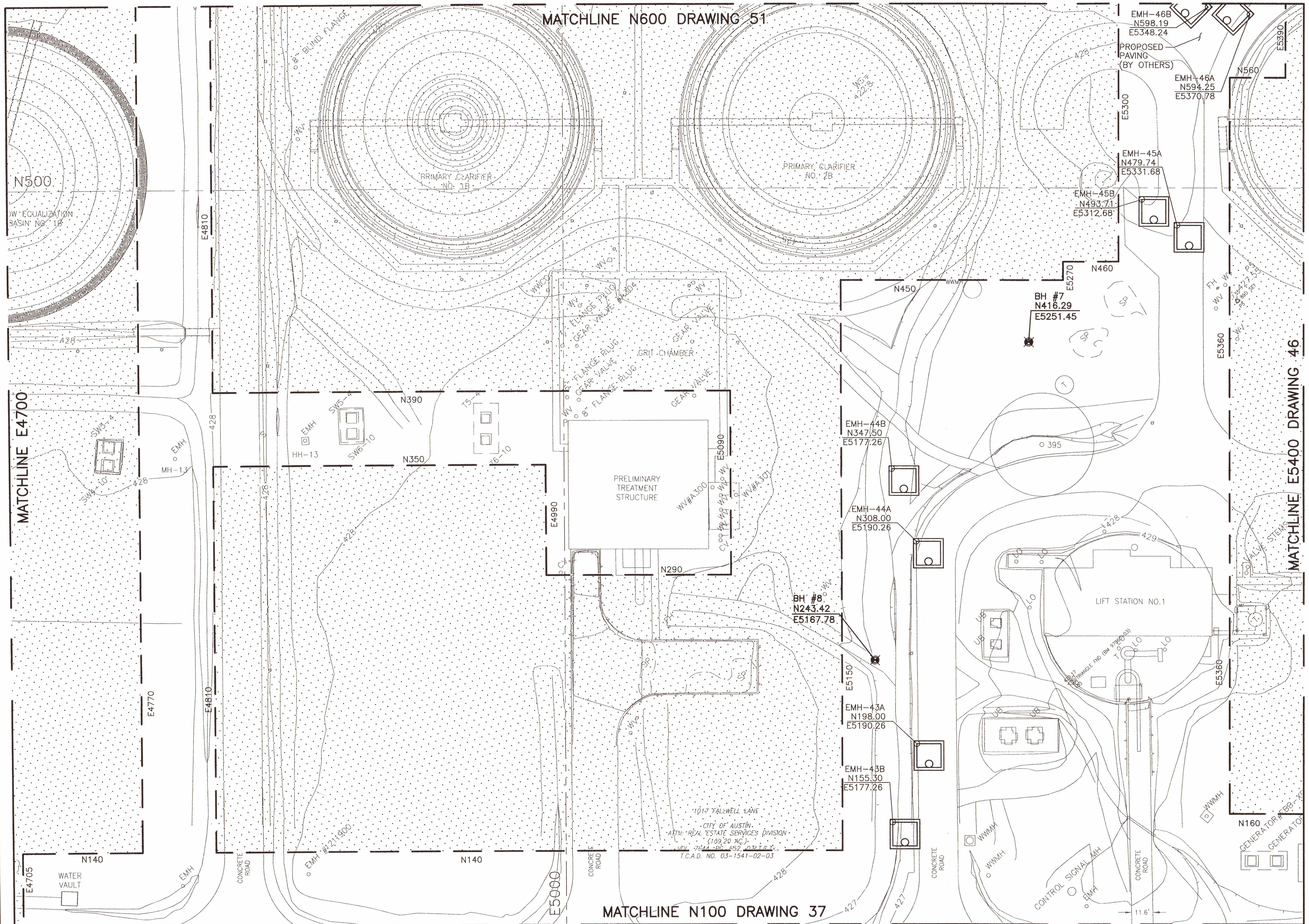

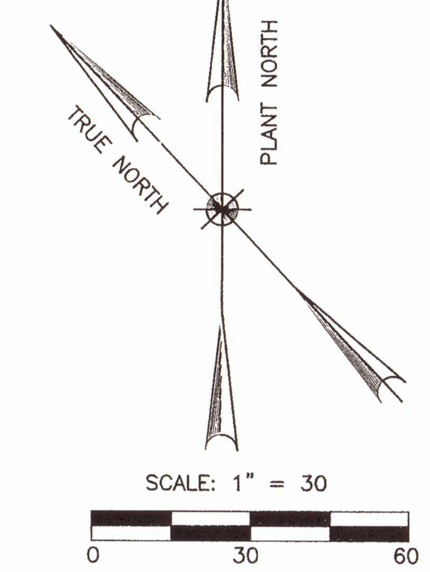

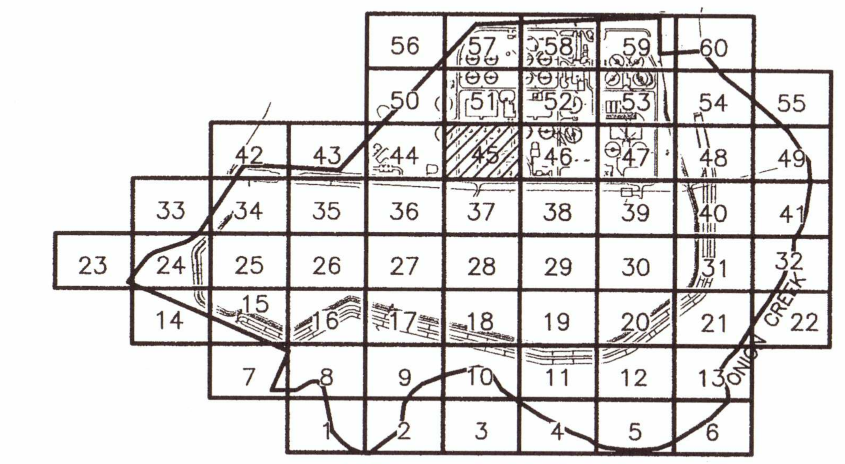

KEY LOCATION MAP

NTS

NOTES:

1. OTHER CONTRACTORS WILL BE WORKING SIMULTANEOUSLY ON THIS SITE AND SOME OF THE WORKING AREAS WILL BE SHARED BETWEEN MULTIPLE CONTRACTORS DURING THE CONTRACT WORK. REFERENCE CONTRACT DOCUMENTS FOR DETAILS REGARDING PHASING OF THE WORK AND COORDINATION WITH OTHER CONTRACTORS.
2. ACTUAL FIELD CONDITION MAY BE DIFFERENT FROM THOSE SHOWN IN THIS DRAWING. CONTRACTOR TO FIELD VERIFY INSTALLED CONDITIONS IMPACTING OR IMPACTED BY HIS WORK PRIOR TO INITIATING WORK.
3. CONTRACTOR TO COORDINATE ALL STORAGE AREAS WITH THE OWNER TO ENSURE NO ACCESS WAYS, MANHOLES OR VALVES ARE BLOCKED OR COVERED.
4. CONSTRUCTION ACCESS ROADS WILL BE USED BY MULTIPLE ON-SITE CONTRACTORS. COORDINATE USE OF THESE ROADS THROUGH THE OWNER.
5. ALL ACCESS WAYS AND DRIVEWAYS TO BE KEPT CLEAR TO ALLOW OPERATORS ACCESS TO ALL AREAS FOR MAINTENANCE AND EMERGENCIES. CONTRACTOR TO COORDINATE THE DELIVERY AND LOADING / UNLOADING OF EQUIPMENT WITH OWNER AT A MINIMUM OF 48 HOURS PRIOR TO DELIVERY.
6. CONTRACTOR TO COORDINATE THE USE OF MAIN OR ALTERNATE ENTRANCE WITH OWNER.
7. CONTRACTOR TO NOT OBSTRUCT DELIVERIES ON THE PLANT ACCESS ROAD. WORK WITHIN THE ACCESS ROAD MUST BE DONE IN A WAY THAT CAN BE COVERED TO PROVIDE DELIVERY ACCESS. ACCESS ROAD CLOSURES MUST BE AGREED UPON WITH THE CITY OF AUSTIN IN ADVANCE.

SITE PLAN APPROVAL SHEET 10 OF 46
FILE NUMBER: SP-2018-0189C APPLICATION DATE: 04/26/2018
APPROVED BY COMMISSION ON ________ UNDER SECTION 112
OF CHAPTER 25-5 OF THE CITY OF AUSTIN CODE.
EXPIRATION DATE(25-5-81, LDC) 7/3/22
CASE MANAGER CHRISTINE BARTON-HOLMES
PROJECT EXPIRATION DATE (ORD. #970905-A)________
DWPZ______DDZ______

DIRECTOR, DEVELOPMENT SERVICES DEPARTMENT
RELEASED FOR GENERAL COMPLIANCE: 7/3/19 ZONING P
Rev. 1 ________ Correction 1 ________
Rev. 2 ________ Correction 2 ________
Rev. 3 ________ Correction 3 ________
Final Plat must be recorded by the Project Expiration Date, if applicable. Subsequent Site Plans which do not comply with the Code current at the time of filing, and all required Building Permits and/or a notice of construction (if a building permit is not required), must also be approved prior to the Project Expiration Date.

Development Services Department JUL 10 2019

LEGEND

PLANT COORDINATE GRID	ELECTRICAL MANHOLE (BY OTHERS)
PROJECT SHEET GRID	
LIMITS OF CONSTRUCTION	
AREAS OUTSIDE LOC	

BAR LENGTH ON ORIGINAL DRAWING EQUALS ONE INCH, ADJUST SCALE ACCORDINGLY.

AECOM

AECOM TECHNICAL SERVICES INC.
9400 AMBERGLEN BOULEVARD
AUSTIN, TEXAS 78729
WWW.AECOM.COM
TBPE REG. NO. F-3580

STATE OF TEXAS
CASEY G. WAUTERS
93889
LICENSED PROFESSIONAL ENGINEER
5/24/19

NO.	DATE:	DESCRIPTION

HARUTUNIAN ENGINEERING INCORPORATED
TEXAS FIRM REGISTRATION NUMBER F-2408
ENGINEERING AND ENVIRONMENTAL CONSULTANTS
305 EAST HUNTLAND DRIVE SUITE 500
AUSTIN, TEXAS 78752

REUSE OF DOCUMENTS
This document, and the designs incorporated herein, is an instrument of professional service that has been developed, designed and prepared by Harutunian Engineering, Inc., and is not to be used, in whole or in part, for any other project without giving written notice to Harutunian Engineering, Inc.

DESIGNED BY: CW
CHECKED BY: JNB
APPROVED BY: SGE
SUBMITTAL DATE: MAY 2019
SCALE: 1" = 30'

SOUTH AUSTIN REGIONAL WASTEWATER TREATMENT PLANT
ELECTRICAL SUBSTATION NO. 1 REPLACEMENT PROJECT
CIP I.D.# 3333.032

DIMENSIONAL CONTROL PLAN

PROJECT NO: 2014-300 SHT. 10 OF 46 DWG NO. A-D-045C

SP-2018-0189C

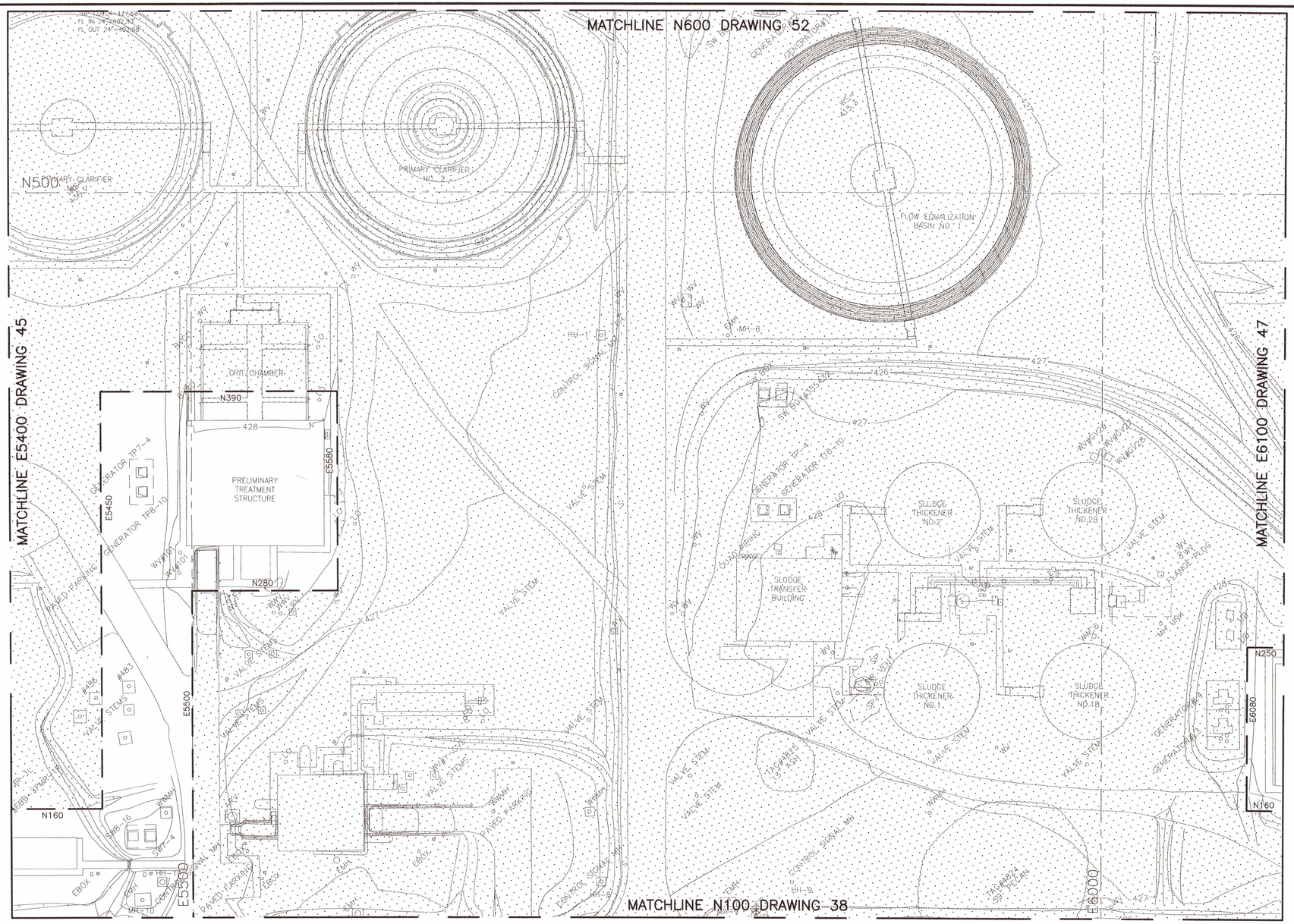

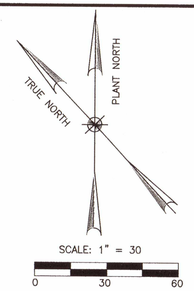

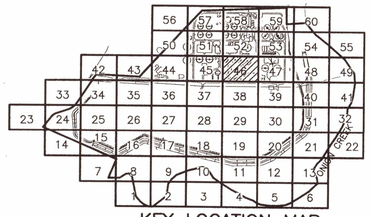

NOTES:

1. OTHER CONTRACTORS WILL BE WORKING SIMULTANEOUSLY ON THIS SITE AND SOME OF THE WORKING AREAS WILL BE SHARED BETWEEN MULTIPLE CONTRACTORS DURING THE CONTRACT WORK. REFERENCE CONTRACT DOCUMENTS FOR DETAILS REGARDING PHASING OF THE WORK AND COORDINATION WITH OTHER CONTRACTORS.
2. ACTUAL FIELD CONDITION MAY BE DIFFERENT FROM THOSE SHOWN IN THIS DRAWING. CONTRACTOR TO FIELD VERIFY INSTALLED CONDITIONS IMPACTING OR IMPACTED BY HIS WORK PRIOR TO INITIATING WORK.
3. CONTRACTOR TO COORDINATE ALL STORAGE AREAS WITH THE OWNER TO ENSURE NO ACCESS WAYS, MANHOLES OR VALVES ARE BLOCKED OR COVERED.
4. CONSTRUCTION ACCESS ROADS WILL BE USED BY MULTIPLE ON-SITE CONTRACTORS. COORDINATE USE OF THESE ROADS THROUGH THE OWNER.
5. ALL ACCESS WAYS AND DRIVEWAYS TO BE KEPT CLEAR TO ALLOW OPERATORS ACCESS TO ALL AREAS FOR MAINTENANCE AND EMERGENCIES. CONTRACTOR TO COORDINATE THE DELIVERY AND LOADING / UNLOADING OF EQUIPMENT WITH OWNER AT A MINIMUM OF 48 HOURS PRIOR TO DELIVERY.
6. CONTRACTOR TO COORDINATE THE USE OF MAIN OR ALTERNATE ENTRANCE WITH OWNER.
7. CONTRACTOR TO NOT OBSTRUCT DELIVERIES ON THE PLANT ACCESS ROAD. WORK WITHIN THE ACCESS ROAD MUST BE DONE IN A WAY THAT CAN BE COVERED TO PROVIDE DELIVERY ACCESS. ACCESS ROAD CLOSURES MUST BE AGREED UPON WITH THE CITY OF AUSTIN IN ADVANCE.

LEGEND

- PLANT COORDINATE GRID
- PROJECT SHEET GRID
- LIMITS OF CONSTRUCTION
- AREAS OUTSIDE LOC
- ELECTRICAL MANHOLE (BY OTHERS)

SITE PLAN APPROVAL SHEET 11 OF 46
FILE NUMBER: SP-2018-0189C APPLICATION DATE: 04/26/2018
APPROVED BY COMMISSION ON UNDER SECTION 112
OF CHAPTER 25-5 OF THE CITY OF AUSTIN CODE.
EXPIRATION DATE(25-5-81, LDC) 7/2/2020
CASE MANAGER CHRISTINE BARTON-HOLMES
PROJECT EXPIRATION DATE (ORD. #970905-A)
DMPZ DDZ
DIRECTOR, DEVELOPMENT SERVICES DEPARTMENT
RELEASED FOR GENERAL COMPLIANCE: 7/3/19 ZONING P
Rev. 1 Correction 1
Rev. 2 Correction 2
Rev. 3 Correction 3
Final Plat must be recorded by the Project Expiration Date, if applicable. Subsequent Site Plans which do not comply with the Code current at the time of filing, and all required Building Permits and/or a notice of construction (if a building permit is not required), must also be approved prior to the Project Expiration Date.

Development Services Department
JUL 10 2019

BAR LENGTH ON ORIGINAL DRAWING EQUALS ONE INCH, ADJUST SCALE ACCORDINGLY.

AECOM TECHNICAL SERVICES INC.
9400 AMBERGLEN BOULEVARD
AUSTIN, TEXAS 78729
WWW.AECOM.COM
TBPE REG. NO. F-3580

STATE OF TEXAS
CASEY G. WAUTERS
93889
LICENSED
PROFESSIONAL ENGINEER
5/24/19

NO.	DATE:	DESCRIPTION

HARUTUNIAN ENGINEERING INCORPORATED
TEXAS FIRM REGISTRATION NUMBER F-2408
ENGINEERING AND ENVIRONMENTAL CONSULTANTS
305 EAST HUNTLAND DRIVE SUITE 500
AUSTIN, TEXAS 78752

REUSE OF DOCUMENTS
This document, and the designs incorporated herein, is an instrument of professional service that has been developed, designed and prepared by Harutunian Engineering, Inc., and is not to be used, in whole or in part, for any other project without giving written notice to Harutunian Engineering, Inc.

DESIGNED BY:	CW
CHECKED BY:	JNB
APPROVED BY:	SGE
SUBMITTAL DATE:	MAY 2019
SCALE:	1" = 30'

SOUTH AUSTIN REGIONAL WASTEWATER TREATMENT PLANT
ELECTRICAL SUBSTATION NO. 1 REPLACEMENT PROJECT
CIP I.D.# 3333.032

DIMENSIONAL CONTROL PLAN

PROJECT NO: 2014-300 SHT. 11 OF 46 DWG NO. A-D-046C

SP-2018-0189C

E:\605268\1\SAR\□ TP ELEC S\1B NO\1100-□ OR□\INGDOCS-CAD\210 CADD\2D-S\SHEETS\PERMIT D 01\GIS\2019-05-15-2019\SHEETS\A-D-046C[D].G B:□ GAD\MAT DATE: 5/15/2019 3:43 PM

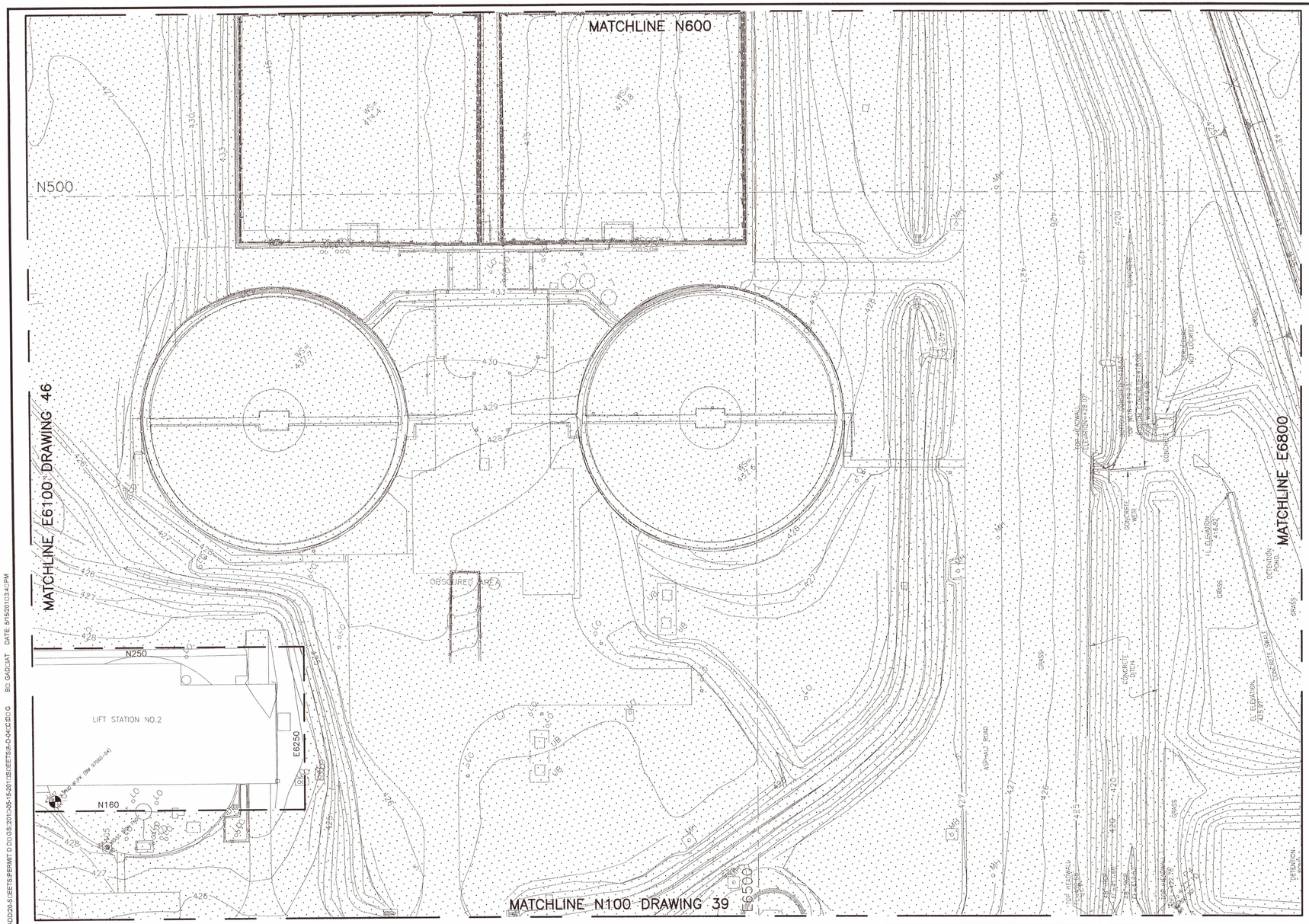

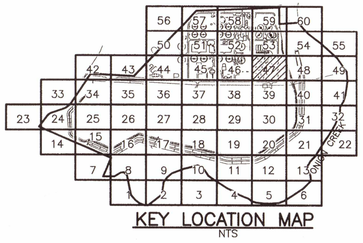

KEY LOCATION MAP
NTS

NOTES:

1. OTHER CONTRACTORS WILL BE WORKING SIMULTANEOUSLY ON THIS SITE AND SOME OF THE WORKING AREAS WILL BE SHARED BETWEEN MULTIPLE CONTRACTORS DURING THE CONTRACT WORK. REFERENCE CONTRACT DOCUMENTS FOR DETAILS REGARDING PHASING OF THE WORK AND COORDINATION WITH OTHER CONTRACTORS.
2. ACTUAL FIELD CONDITION MAY BE DIFFERENT FROM THOSE SHOWN IN THIS DRAWING. CONTRACTOR TO FIELD VERIFY INSTALLED CONDITIONS IMPACTING OR IMPACTED BY HIS WORK PRIOR TO INITIATING WORK.
3. CONTRACTOR TO COORDINATE ALL STORAGE AREAS WITH THE OWNER TO ENSURE NO ACCESS WAYS, MANHOLES OR VALVES ARE BLOCKED OR COVERED.
4. CONSTRUCTION ACCESS ROADS WILL BE USED BY MULTIPLE ON-SITE CONTRACTORS. COORDINATE USE OF THESE ROADS THROUGH THE OWNER.
5. ALL ACCESS WAYS AND DRIVEWAYS TO BE KEPT CLEAR TO ALLOW OPERATORS ACCESS TO ALL AREAS FOR MAINTENANCE AND EMERGENCIES. CONTRACTOR TO COORDINATE THE DELIVERY AND LOADING / UNLOADING OF EQUIPMENT WITH OWNER AT A MINIMUM OF 48 HOURS PRIOR TO DELIVERY.
6. CONTRACTOR TO COORDINATE THE USE OF MAIN OR ALTERNATE ENTRANCE WITH OWNER.
7. CONTRACTOR TO NOT OBSTRUCT DELIVERIES ON THE PLANT ACCESS ROAD. WORK WITHIN THE ACCESS ROAD MUST BE DONE IN A WAY THAT CAN BE COVERED TO PROVIDE DELIVERY ACCESS. ACCESS ROAD CLOSURES MUST BE AGREED UPON WITH THE CITY OF AUSTIN IN ADVANCE.

LEGEND

- PLANT COORDINATE GRID
- PROJECT SHEET GRID
- LIMITS OF CONSTRUCTION
- AREAS OUTSIDE LOC
- ELECTRICAL MANHOLE (BY OTHERS)

SITE PLAN APPROVAL SHEET 12 OF 46
FILE NUMBER: SP-2018-0189C APPLICATION DATE: 04/26/2018
APPROVED BY COMMISSION ON _____ UNDER SECTION 112
OF CHAPTER 25-5 OF THE CITY OF AUSTIN CODE.
EXPIRATION DATE(25-5-81, LDC) 7/7/20
CASE MANAGER CHRISTINE BARTON-HOLMES
PROJECT EXPIRATION DATE (ORD. #970905-A) _____
DMPZ ___ DDZ ___

DIRECTOR, DEVELOPMENT SERVICES DEPARTMENT
RELEASED FOR GENERAL COMPLIANCE: 7/3/19 ZONING P
Rev. 1 _____ Correction 1 _____
Rev. 2 _____ Correction 2 _____
Rev. 3 _____ Correction 3 _____
Final Plat must be recorded by the Project Expiration Date, if applicable. Subsequent Site Plans which do not comply with the Code current at the time of filing, and all required Building Permits and/or a notice of construction (if a building permit is not required), must also be approved prior to the Project Expiration Date.

Development Services Department
JUL 10 2019

BAR LENGTH ON ORIGINAL DRAWING EQUALS ONE INCH, ADJUST SCALE ACCORDINGLY.

AECOM
AECOM TECHNICAL SERVICES INC.
9400 AMBERGLEN BOULEVARD
AUSTIN, TEXAS 78729
WWW.AECOM.COM
TBPE REG. NO. F-3580

STATE OF TEXAS
CASEY G. WAUTERS
93889
LICENSED
PROFESSIONAL ENGINEER
5/24/19

NO.	DATE:	DESCRIPTION

HARUTUNIAN ENGINEERING INCORPORATED
TEXAS FIRM REGISTRATION NUMBER F-2408
ENGINEERING AND ENVIRONMENTAL CONSULTANTS
305 EAST HUNTLAND DRIVE SUITE 500
AUSTIN, TEXAS 78752

REUSE OF DOCUMENTS
This document, and the designs incorporated herein, is an instrument of professional service that has been developed, designed and prepared by Harutunian Engineering, Inc., and is not to be used, in whole or in part, for any other project without giving written notice to Harutunian Engineering, Inc.

DESIGNED BY:	CW
CHECKED BY:	JNB
APPROVED BY:	SGE
SUBMITTAL DATE:	MAY 2019
SCALE:	1" = 30'

SOUTH AUSTIN REGIONAL WASTEWATER TREATMENT PLANT
ELECTRICAL SUBSTATION NO. 1 REPLACEMENT PROJECT
CIP I.D.# 3333.032

DIMENSIONAL CONTROL PLAN

PROJECT NO: 2014-300 SHT. 12 OF 46 DWG NO. A-D-047C

SP-2018-0189C

E:\6052961\SAR\D_TP ELEC SUB NO.1\100-ORIGINGDOCS-CAD\100 CADD\20-SHEETS\PERMIT D DGS\2011-08-15-2011\SHEETS\A-D-047C(D1).G BY: GADLDAT DATE: 5/15/2019 3:41 PM

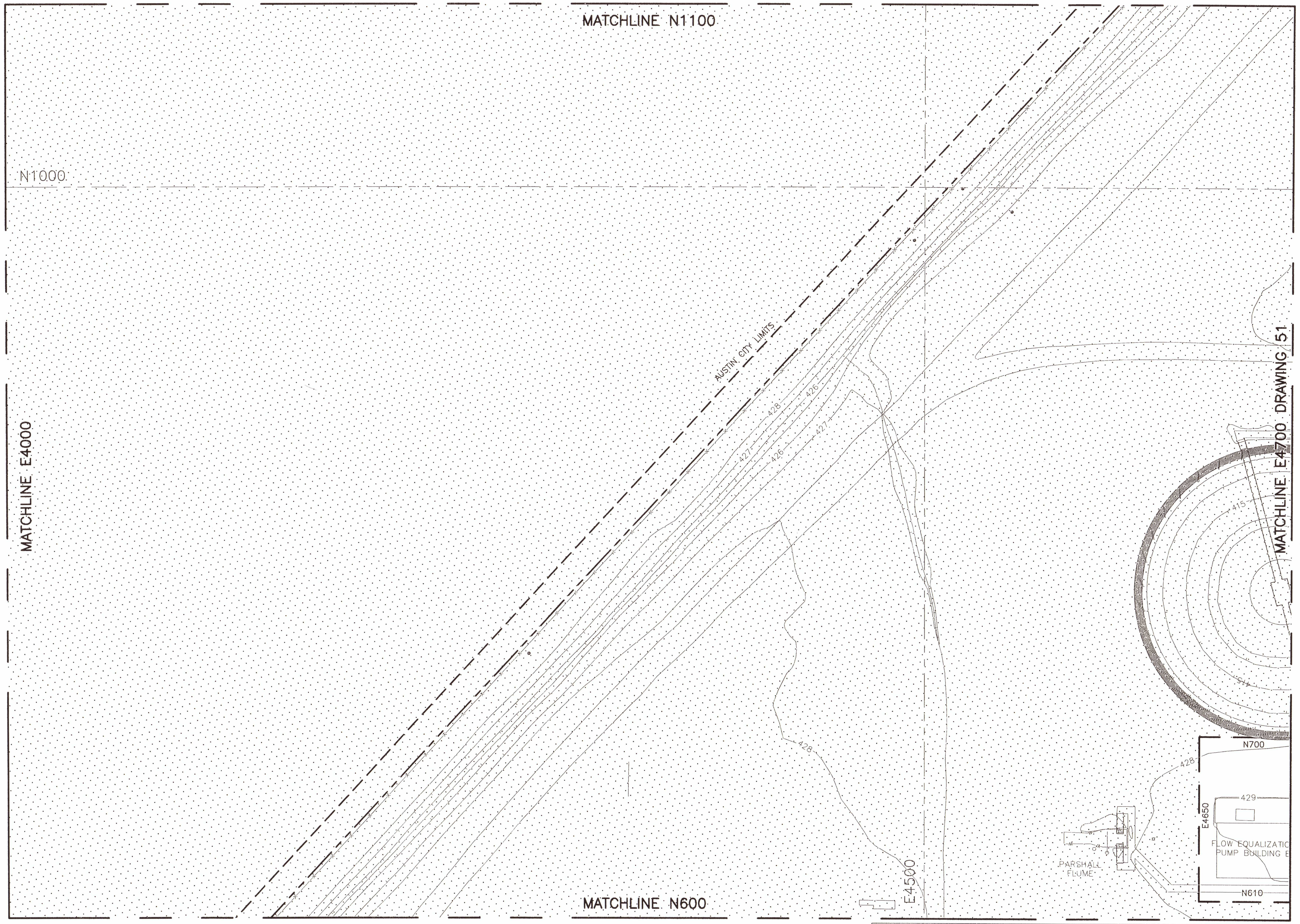

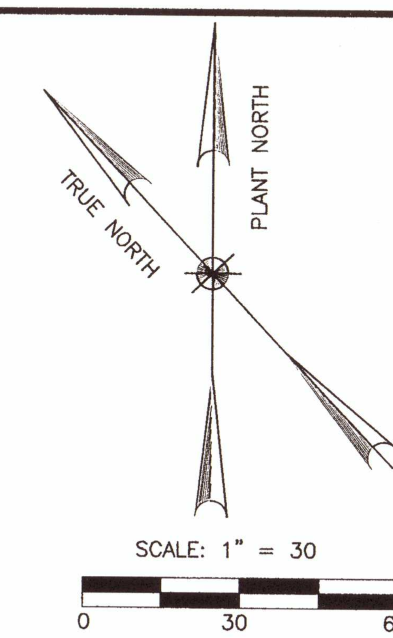

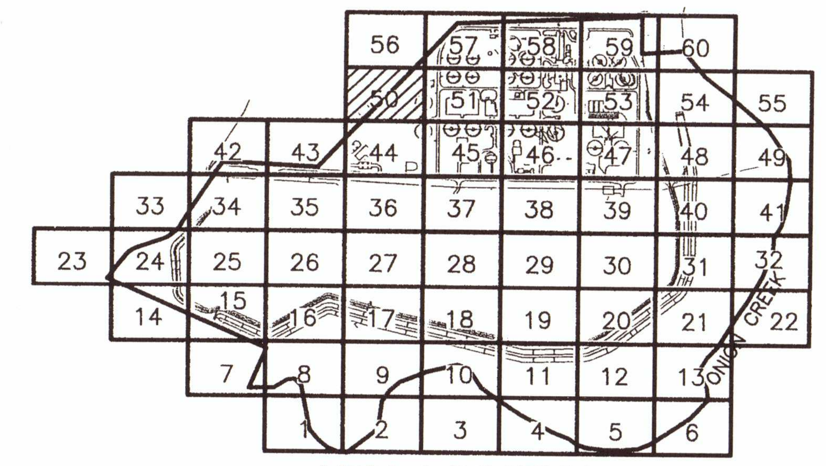

KEY LOCATION MAP

NTS

NOTES:

1. OTHER CONTRACTORS WILL BE WORKING SIMULTANEOUSLY ON THIS SITE AND SOME OF THE WORKING AREAS WILL BE SHARED BETWEEN MULTIPLE CONTRACTORS DURING THE CONTRACT WORK. REFERENCE CONTRACT DOCUMENTS FOR DETAILS REGARDING PHASING OF THE WORK AND COORDINATION WITH OTHER CONTRACTORS.
2. ACTUAL FIELD CONDITION MAY BE DIFFERENT FROM THOSE SHOWN IN THIS DRAWING. CONTRACTOR TO FIELD VERIFY INSTALLED CONDITIONS IMPACTING OR IMPACTED BY HIS WORK PRIOR TO INITIATING WORK.
3. CONTRACTOR TO COORDINATE ALL STORAGE AREAS WITH THE OWNER TO ENSURE NO ACCESS WAYS, MANHOLES OR VALVES ARE BLOCKED OR COVERED.
4. CONSTRUCTION ACCESS ROADS WILL BE USED BY MULTIPLE ON-SITE CONTRACTORS. COORDINATE USE OF THESE ROADS THROUGH THE OWNER.
5. ALL ACCESS WAYS AND DRIVEWAYS TO BE KEPT CLEAR TO ALLOW OPERATORS ACCESS TO ALL AREAS FOR MAINTENANCE AND EMERGENCIES. CONTRACTOR TO COORDINATE THE DELIVERY AND LOADING / UNLOADING OF EQUIPMENT WITH OWNER AT A MINIMUM OF 48 HOURS PRIOR TO DELIVERY.
6. CONTRACTOR TO COORDINATE THE USE OF MAIN OR ALTERNATE ENTRANCE WITH OWNER.
7. CONTRACTOR TO NOT OBSTRUCT DELIVERIES ON THE PLANT ACCESS ROAD. WORK WITHIN THE ACCESS ROAD MUST BE DONE IN A WAY THAT CAN BE COVERED TO PROVIDE DELIVERY ACCESS. ACCESS ROAD CLOSURES MUST BE AGREED UPON WITH THE CITY OF AUSTIN IN ADVANCE.

SITE PLAN APPROVAL SHEET 13 OF 46
FILE NUMBER: SP-2018-0189C APPLICATION DATE: 04/26/2018
APPROVED BY COMMISSION ON ________ UNDER SECTION 112
OF CHAPTER 25-5 OF THE CITY OF AUSTIN CODE.
EXPIRATION DATE(25-5-81, LDC) 7/3/22
CASE MANAGER CHRISTINE BARTON-HOLMES
PROJECT EXPIRATION DATE (ORD. #970905-A)________
DWPZ_____ DDZ_____

DIRECTOR, DEVELOPMENT SERVICES DEPARTMENT
RELEASED FOR GENERAL COMPLIANCE: 7/2/19 ZONING P
Rev. 1 ________ Correction 1________
Rev. 2 ________ Correction 2________
Rev. 3 ________ Correction 3________
Final Plat must be recorded by the Project Expiration Date, if applicable. Subsequent Site Plans which do not comply with the Code current at the time of filing, and all required Building Permits and/or a notice of construction (if a building permit is not required), must also be approved prior to the Project Expiration Date.

Development Services Department
JUL 10 2019

LEGEND

PLANT COORDINATE GRID	ELECTRICAL MANHOLE (BY OTHERS)
PROJECT SHEET GRID	
LIMITS OF CONSTRUCTION	
AREAS OUTSIDE LOC	

BAR LENGTH ON ORIGINAL DRAWING EQUALS ONE INCH, ADJUST SCALE ACCORDINGLY.

AECOM

AECOM TECHNICAL SERVICES INC.
9400 AMBERGLEN BOULEVARD
AUSTIN, TEXAS 78729
WWW.AECOM.COM
TBPE REG. NO. F-3580

STATE OF TEXAS
CASEY G. WAUTERS
93889
LICENSED
PROFESSIONAL ENGINEER
5/24/19

NO.	DATE:	DESCRIPTION

HARUTUNIAN ENGINEERING INCORPORATED

TEXAS FIRM REGISTRATION NUMBER F-2408

ENGINEERING AND ENVIRONMENTAL CONSULTANTS
305 EAST HUNTLAND DRIVE SUITE 500
AUSTIN, TEXAS 78752

REUSE OF DOCUMENTS

This document, and the designs incorporated herein, is an instrument of professional service that has been developed, designed and prepared by Harutunian Engineering, Inc., and is not to be used, in whole or in part, for any other project without giving written notice to Harutunian Engineering, Inc.

DESIGNED BY:	CW
CHECKED BY:	JNB
APPROVED BY:	SGE
SUBMITTAL DATE:	MAY 2019
SCALE:	1" = 30'

SOUTH AUSTIN REGIONAL WASTEWATER TREATMENT PLANT
ELECTRICAL SUBSTATION NO. 1 REPLACEMENT PROJECT
CIP I.D.# 3333.032

DIMENSIONAL CONTROL PLAN

PROJECT NO:	2014-300	SHT.	13 OF 46	DWG NO.	A-D-050C

SP-2018-0189C

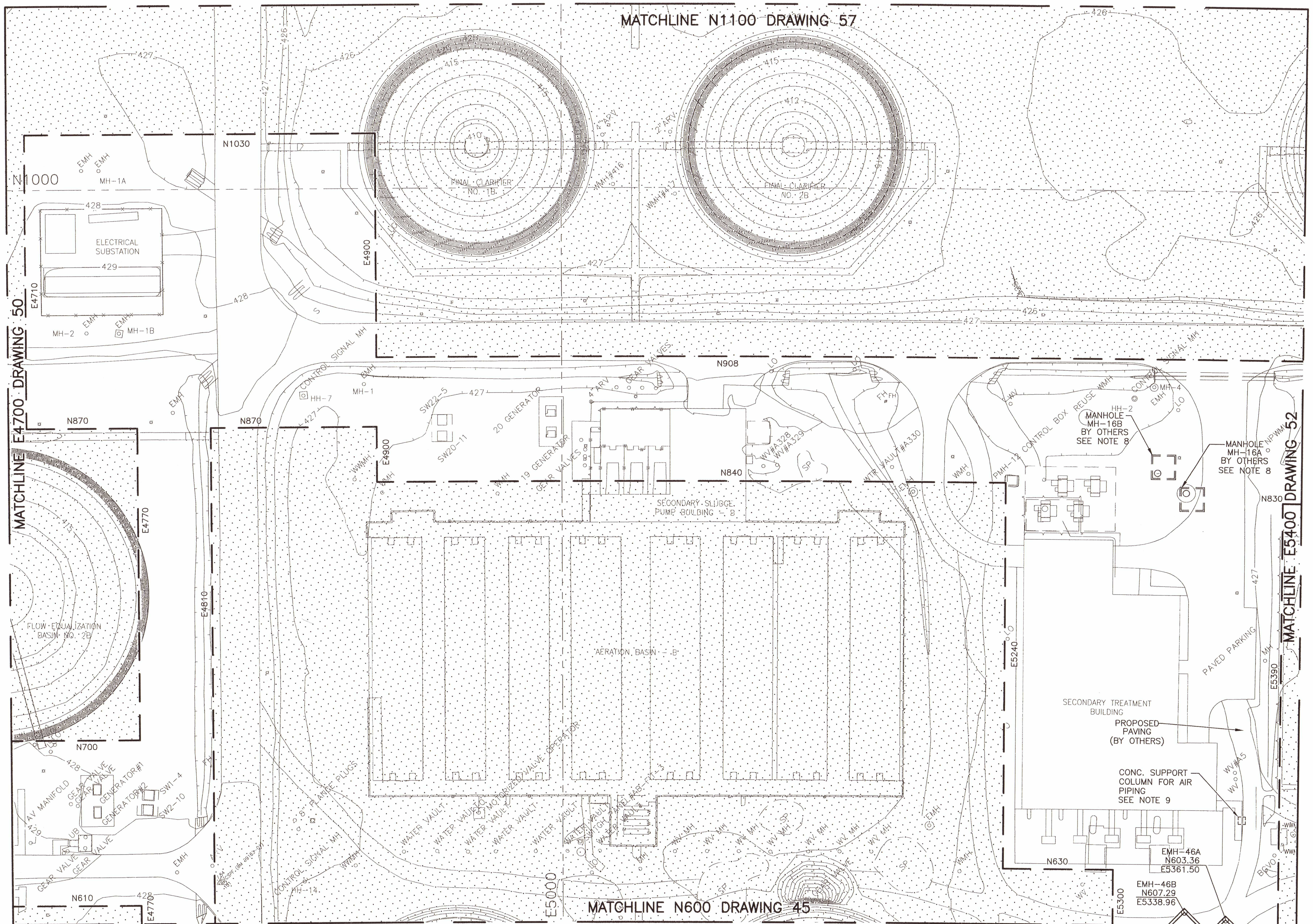

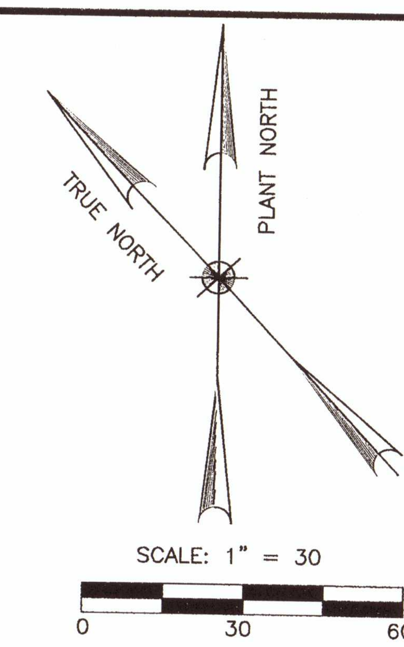

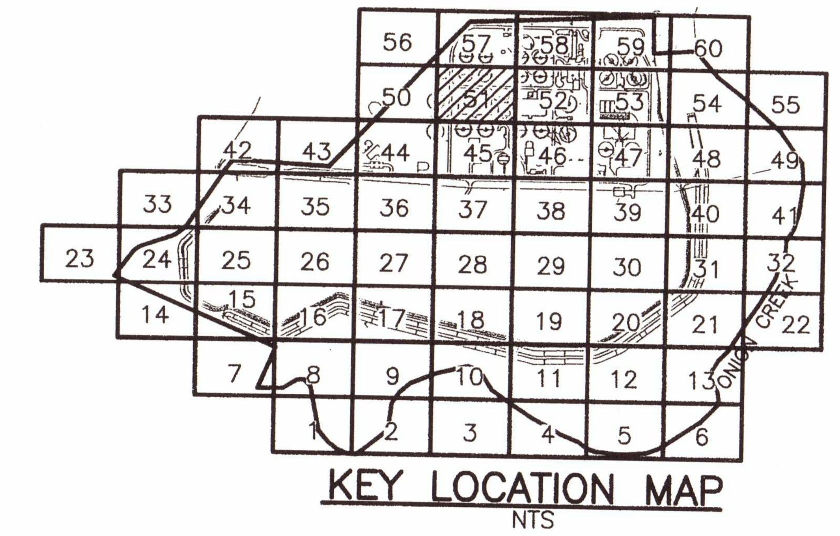

NOTES:

1. OTHER CONTRACTORS WILL BE WORKING SIMULTANEOUSLY ON THIS SITE AND SOME OF THE WORKING AREAS WILL BE SHARED BETWEEN MULTIPLE CONTRACTORS DURING THE CONTRACT WORK. REFERENCE CONTRACT DOCUMENTS FOR DETAILS REGARDING PHASING OF THE WORK AND COORDINATION WITH OTHER CONTRACTORS.
2. ACTUAL FIELD CONDITION MAY BE DIFFERENT FROM THOSE SHOWN IN THIS DRAWING. CONTRACTOR TO FIELD VERIFY INSTALLED CONDITIONS IMPACTING OR IMPACTED BY HIS WORK PRIOR TO INITIATING WORK.
3. CONTRACTOR TO COORDINATE ALL STORAGE AREAS WITH THE OWNER TO ENSURE NO ACCESS WAYS, MANHOLES OR VALVES ARE BLOCKED OR COVERED.
4. CONSTRUCTION ACCESS ROADS WILL BE USED BY MULTIPLE ON-SITE CONTRACTORS. COORDINATE USE OF THESE ROADS THROUGH THE OWNER.
5. ALL ACCESS WAYS AND DRIVEWAYS TO BE KEPT CLEAR TO ALLOW OPERATORS ACCESS TO ALL AREAS FOR MAINTENANCE AND EMERGENCIES. CONTRACTOR TO COORDINATE THE DELIVERY AND LOADING / UNLOADING OF EQUIPMENT WITH OWNER AT A MINIMUM OF 48 HOURS PRIOR TO DELIVERY.
6. CONTRACTOR TO COORDINATE THE USE OF MAIN OR ALTERNATE ENTRANCE WITH OWNER.
7. CONTRACTOR TO NOT OBSTRUCT DELIVERIES ON THE PLANT ACCESS ROAD. WORK WITHIN THE ACCESS ROAD MUST BE DONE IN A WAY THAT CAN BE COVERED TO PROVIDE DELIVERY ACCESS. ACCESS ROAD CLOSURES MUST BE AGREED UPON WITH THE CITY OF AUSTIN IN ADVANCE.
8. LOCATIONS OF ELECTRICAL MANHOLES 16A AND 16B SHOWN ON THIS DRAWING ARE BASED ON PROPOSED CONSTRUCTION PLANS FOR AN ON-GOING CONSTRUCTION PROJECT. CONTRACTOR SHALL FIELD VERIFY LOCATION OF MANHOLES, BOTTOM ELEVATIONS, AND WINDOW PENETRATION SIZES AND ELEVATIONS PRIOR TO INITIATING WORK. ANY DEVIATIONS FROM PLANS SHALL BE BROUGHT TO THE OWNER'S AND ENGINEER'S ATTENTION FOR RESOLUTION BEFORE STARTING ANY DUCTBANK INSTALLATION.
9. LOCATION OF CONCRETE SUPPORT COLUMN AND OVERHEAD AIR PIPING SHOWN ON THIS DRAWING ARE BASED ON PROPOSED CONSTRUCTION PLANS FOR AN ON-GOING CONSTRUCTION PROJECT. CONTRACTOR SHALL FIELD VERIFY LOCATION OF CONCRETE SUPPORT COLUMN PRIOR TO INITIATING WORK. ANY DEVIATIONS FROM PLANS SHALL BE BROUGHT TO THE OWNER'S AND ENGINEER'S ATTENTION FOR RESOLUTION BEFORE STARTING ANY DUCTBANK INSTALLATION.

LEGEND

- PLANT COORDINATE GRID
- PROJECT SHEET GRID
- LIMITS OF CONSTRUCTION
- AREAS OUTSIDE LOC
- ELECTRICAL MANHOLE (BY OTHERS)

Development Services Department [stamp] ... 0 2019

SITE PLAN APPROVAL SHEET 14 OF 46
FILE NUMBER: SP-2018-0189C APPLICATION DATE: 04/26/2018
APPROVED BY COMMISSION ON ________ UNDER SECTION 112
OF CHAPTER 25-5 OF THE CITY OF AUSTIN CODE.
EXPIRATION DATE(25-5-81, LDC) 7/3/22
CASE MANAGER CHRISTINE BARTON-HOLMES
PROJECT EXPIRATION DATE (ORD. #970905-A)________
DWPZ______ DDZ______

[signature]

DIRECTOR, DEVELOPMENT SERVICES DEPARTMENT
RELEASED FOR GENERAL COMPLIANCE: 7/3/19 ZONING P
Rev. 1 ________ Correction 1 ________
Rev. 2 ________ Correction 2 ________
Rev. 3 ________ Correction 3 ________

Final Plat must be recorded by the Project Expiration Date, if applicable. Subsequent Site Plans which do not comply with the Code current at the time of filing, and all required Building Permits and/or a notice of construction (if a building permit is not required), must also be approved prior to the Project Expiration Date.

BAR LENGTH ON ORIGINAL DRAWING EQUALS ONE INCH, ADJUST SCALE ACCORDINGLY.

AECOM
AECOM TECHNICAL SERVICES INC.
9400 AMBERGLEN BOULEVARD
AUSTIN, TEXAS 78729
WWW.AECOM.COM
TBPE REG. NO. F-3580

STATE OF TEXAS
CASEY G. WAUTERS
93889
LICENSED PROFESSIONAL ENGINEER
[signature] 5/28/19

NO.	DATE:	DESCRIPTION

HARUTUNIAN ENGINEERING INCORPORATED
TEXAS FIRM REGISTRATION NUMBER F-2408
ENGINEERING AND ENVIRONMENTAL CONSULTANTS
305 EAST HUNTLAND DRIVE SUITE 500
AUSTIN, TEXAS 78752

REUSE OF DOCUMENTS
This document, and the designs incorporated herein, is an instrument of professional service that has been developed, designed and prepared by Harutunian Engineering, Inc., and is not to be used, in whole or in part, for any other project without giving written notice to Harutunian Engineering, Inc.

DESIGNED BY: CW
CHECKED BY: JNB
APPROVED BY: SGE
SUBMITTAL DATE: MAY 2019
SCALE: 1" = 30'

SOUTH AUSTIN REGIONAL WASTEWATER TREATMENT PLANT
ELECTRICAL SUBSTATION NO. 1 REPLACEMENT PROJECT
CIP I.D.# 3333.032

DIMENSIONAL CONTROL PLAN

PROJECT NO: 2014-300 SHT. 14 OF 46 DWG NO. A-D-051C

SP-2018-0189C

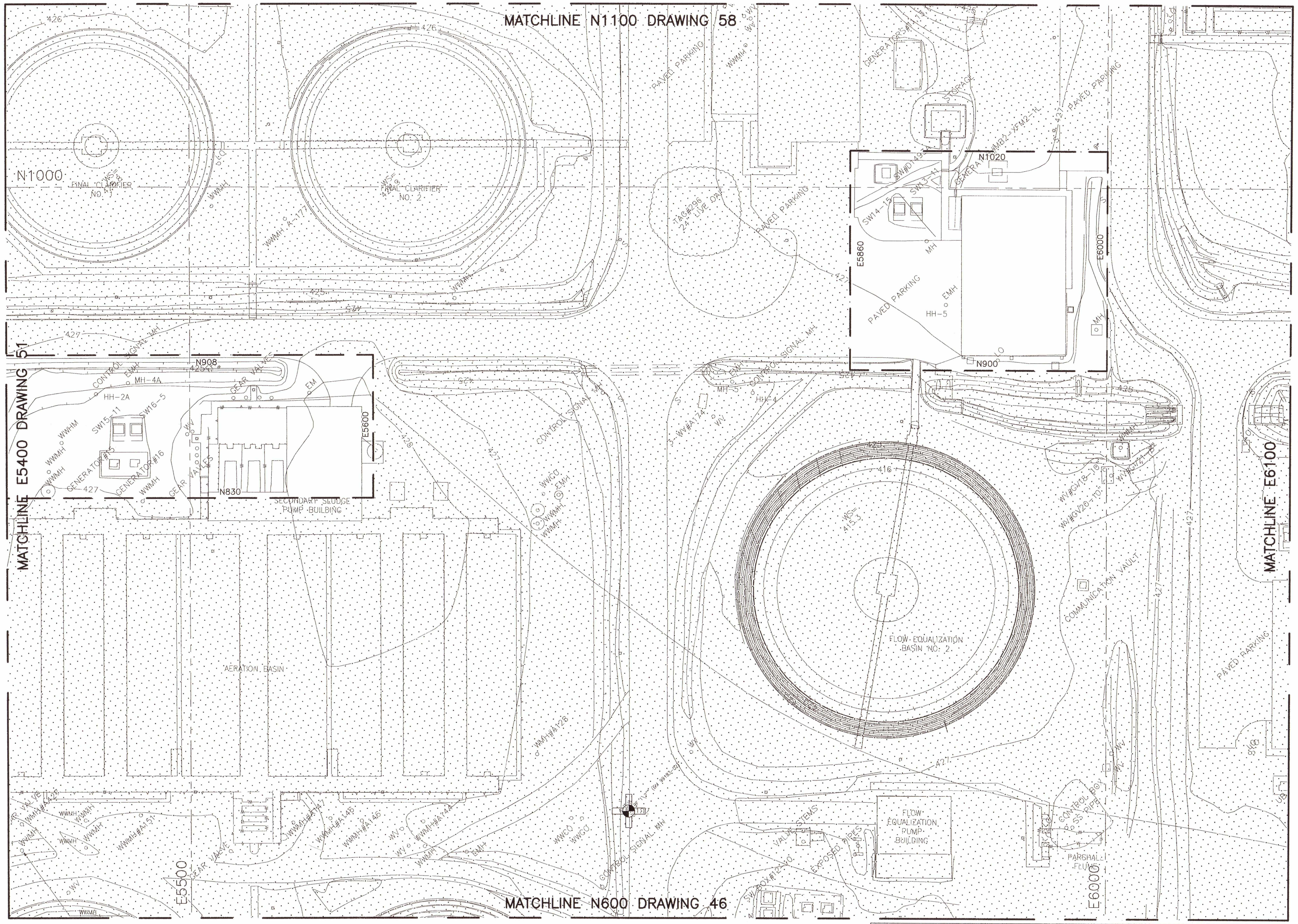

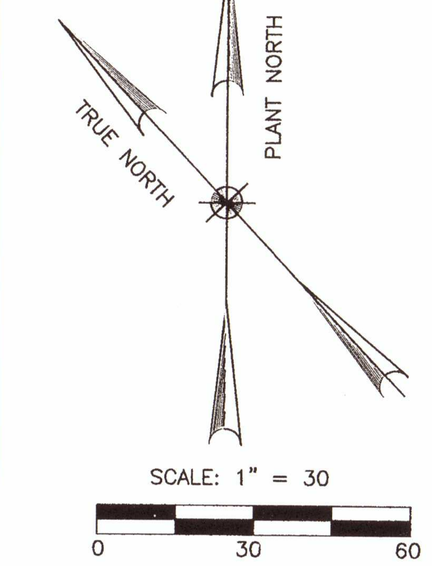

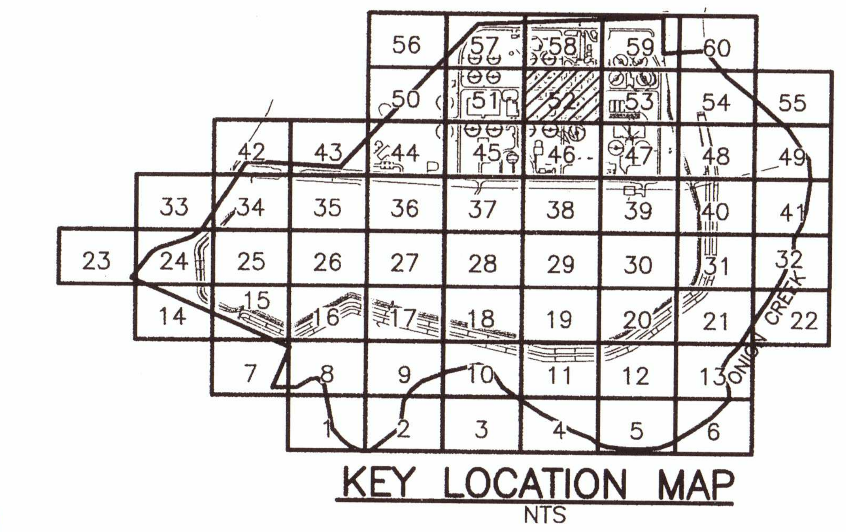

NOTES:

1. OTHER CONTRACTORS WILL BE WORKING SIMULTANEOUSLY ON THIS SITE AND SOME OF THE WORKING AREAS WILL BE SHARED BETWEEN MULTIPLE CONTRACTORS DURING THE CONTRACT WORK. REFERENCE CONTRACT DOCUMENTS FOR DETAILS REGARDING PHASING OF THE WORK AND COORDINATION WITH OTHER CONTRACTORS.
2. ACTUAL FIELD CONDITION MAY BE DIFFERENT FROM THOSE SHOWN IN THIS DRAWING. CONTRACTOR TO FIELD VERIFY INSTALLED CONDITIONS IMPACTING OR IMPACTED BY HIS WORK PRIOR TO INITIATING WORK.
3. CONTRACTOR TO COORDINATE ALL STORAGE AREAS WITH THE OWNER TO ENSURE NO ACCESS WAYS, MANHOLES OR VALVES ARE BLOCKED OR COVERED.
4. CONSTRUCTION ACCESS ROADS WILL BE USED BY MULTIPLE ON-SITE CONTRACTORS. COORDINATE USE OF THESE ROADS THROUGH THE OWNER.
5. ALL ACCESS WAYS AND DRIVEWAYS TO BE KEPT CLEAR TO ALLOW OPERATORS ACCESS TO ALL AREAS FOR MAINTENANCE AND EMERGENCIES. CONTRACTOR TO COORDINATE THE DELIVERY AND LOADING / UNLOADING OF EQUIPMENT WITH OWNER AT A MINIMUM OF 48 HOURS PRIOR TO DELIVERY.
6. CONTRACTOR TO COORDINATE THE USE OF MAIN OR ALTERNATE ENTRANCE WITH OWNER.
7. CONTRACTOR TO NOT OBSTRUCT DELIVERIES ON THE PLANT ACCESS ROAD. WORK WITHIN THE ACCESS ROAD MUST BE DONE IN A WAY THAT CAN BE COVERED TO PROVIDE DELIVERY ACCESS. ACCESS ROAD CLOSURES MUST BE AGREED UPON WITH THE CITY OF AUSTIN IN ADVANCE.

SITE PLAN APPROVAL SHEET 15 OF 46
FILE NUMBER: SP-2018-0189C APPLICATION DATE: 04/26/2018
APPROVED BY COMMISSION ON ________ UNDER SECTION 112
OF CHAPTER 25-5 OF THE CITY OF AUSTIN CODE.
EXPIRATION DATE(25-5-81, LDC) 7/3/22
CASE MANAGER CHRISTINE BARTON-HOLMES
PROJECT EXPIRATION DATE (ORD. #970905-A)________
DWPZ_____ DDZ_____

DIRECTOR, DEVELOPMENT SERVICES DEPARTMENT
RELEASED FOR GENERAL COMPLIANCE: 7/3/19 ZONING P
Rev. 1 ____________ Correction 1 ____________
Rev. 2 ____________ Correction 2 ____________
Rev. 3 ____________ Correction 3 ____________
Final Plat must be recorded by the Project Expiration Date, if applicable. Subsequent Site Plans which do not comply with the Code current at the time of filing, and all required Building Permits and/or a notice of construction (if a building permit is not required), must also be approved prior to the Project Expiration Date.

Development Services Department
JUL 10 2019

LEGEND

PLANT COORDINATE GRID	ELECTRICAL MANHOLE (BY OTHERS)
PROJECT SHEET GRID	
LIMITS OF CONSTRUCTION	
AREAS OUTSIDE LOC	

BAR LENGTH ON ORIGINAL DRAWING EQUALS ONE INCH, ADJUST SCALE ACCORDINGLY.

AECOM
AECOM TECHNICAL SERVICES INC.
9400 AMBERGLEN BOULEVARD
AUSTIN, TEXAS 78729
WWW.AECOM.COM
TBPE REG. NO. F-3580

STATE OF TEXAS
CASEY G. WAUTERS
93889
LICENSED
PROFESSIONAL ENGINEER
5/24/19

NO.	DATE:	DESCRIPTION

HARUTUNIAN ENGINEERING INCORPORATED
TEXAS FIRM REGISTRATION NUMBER F-2408
ENGINEERING AND ENVIRONMENTAL CONSULTANTS
305 EAST HUNTLAND DRIVE SUITE 500
AUSTIN, TEXAS 78752

REUSE OF DOCUMENTS
This document, and the designs incorporated herein, is an instrument of professional service that has been developed, designed and prepared by Harutunian Engineering, Inc., and is not to be used, in whole or in part, for any other project without giving written notice to Harutunian Engineering, Inc.

DESIGNED BY:	CW
CHECKED BY:	JNB
APPROVED BY:	SGE
SUBMITTAL DATE:	MAY 2019
SCALE:	1" = 30'

SOUTH AUSTIN REGIONAL WASTEWATER TREATMENT PLANT ELECTRICAL SUBSTATION NO. 1 REPLACEMENT PROJECT

CIP I.D.# 3333.032

DIMENSIONAL CONTROL PLAN

PROJECT NO: 2014-300 SHT. 15 OF 46 DWG NO. A-D-052C

SP-2018-0189C

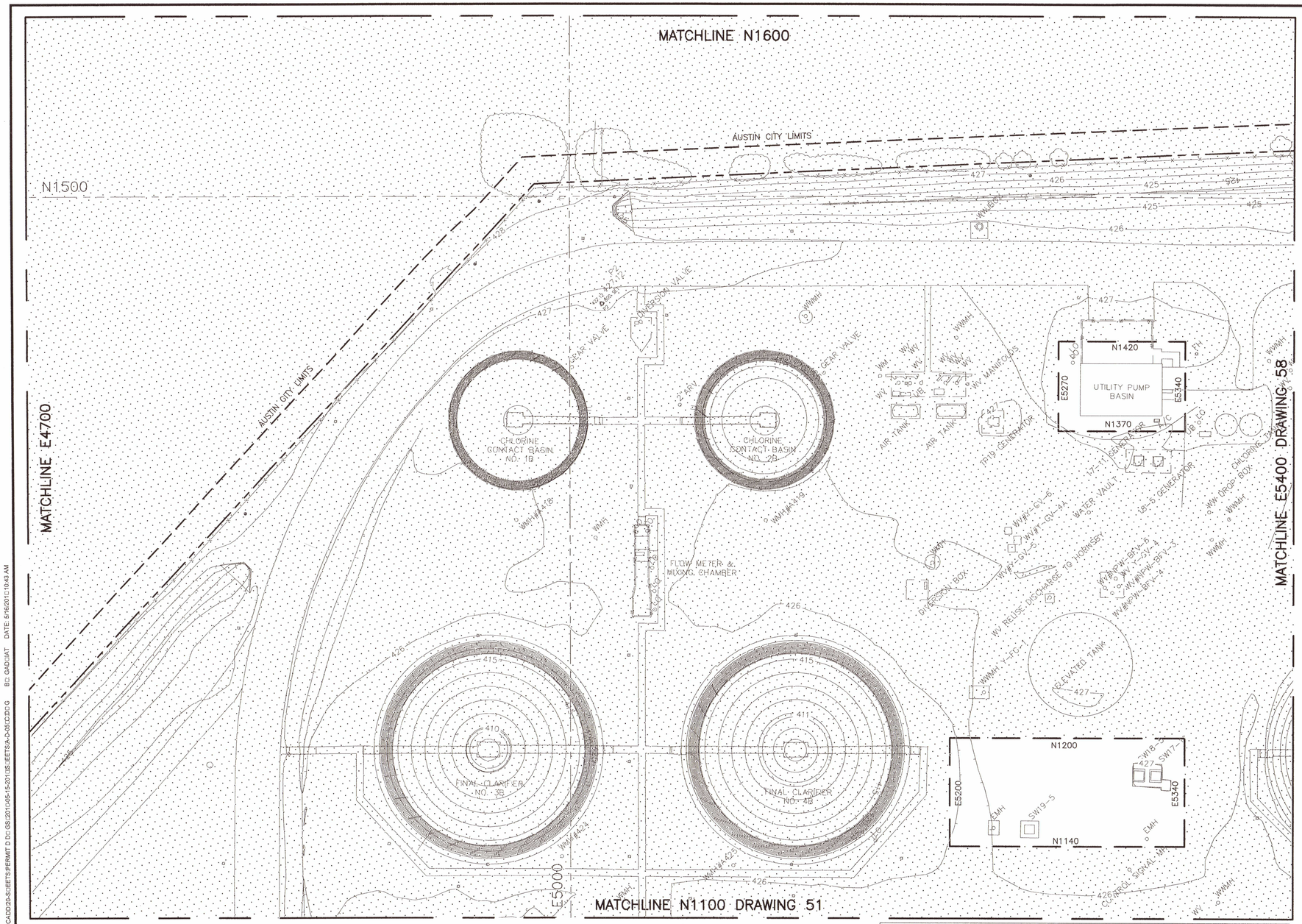

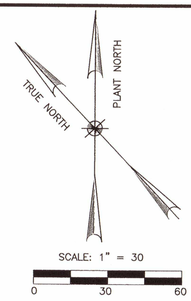

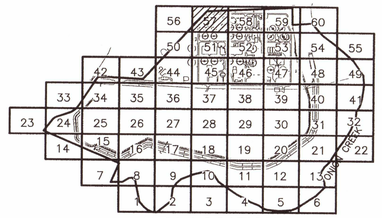

KEY LOCATION MAP
NTS

NOTES:

1. OTHER CONTRACTORS WILL BE WORKING SIMULTANEOUSLY ON THIS SITE AND SOME OF THE WORKING AREAS WILL BE SHARED BETWEEN MULTIPLE CONTRACTORS DURING THE CONTRACT WORK. REFERENCE CONTRACT DOCUMENTS FOR DETAILS REGARDING PHASING OF THE WORK AND COORDINATION WITH OTHER CONTRACTORS.
2. ACTUAL FIELD CONDITION MAY BE DIFFERENT FROM THOSE SHOWN IN THIS DRAWING. CONTRACTOR TO FIELD VERIFY INSTALLED CONDITIONS IMPACTING OR IMPACTED BY HIS WORK PRIOR TO INITIATING WORK.
3. CONTRACTOR TO COORDINATE ALL STORAGE AREAS WITH THE OWNER TO ENSURE NO ACCESS WAYS, MANHOLES OR VALVES ARE BLOCKED OR COVERED.
4. CONSTRUCTION ACCESS ROADS WILL BE USED BY MULTIPLE ON-SITE CONTRACTORS. COORDINATE USE OF THESE ROADS THROUGH THE OWNER.
5. ALL ACCESS WAYS AND DRIVEWAYS TO BE KEPT CLEAR TO ALLOW OPERATORS ACCESS TO ALL AREAS FOR MAINTENANCE AND EMERGENCIES. CONTRACTOR TO COORDINATE THE DELIVERY AND LOADING / UNLOADING OF EQUIPMENT WITH OWNER AT A MINIMUM OF 48 HOURS PRIOR TO DELIVERY.
6. CONTRACTOR TO COORDINATE THE USE OF MAIN OR ALTERNATE ENTRANCE WITH OWNER.
7. CONTRACTOR TO NOT OBSTRUCT DELIVERIES ON THE PLANT ACCESS ROAD. WORK WITHIN THE ACCESS ROAD MUST BE DONE IN A WAY THAT CAN BE COVERED TO PROVIDE DELIVERY ACCESS. ACCESS ROAD CLOSURES MUST BE AGREED UPON WITH THE CITY OF AUSTIN IN ADVANCE.

LEGEND

- PLANT COORDINATE GRID
- PROJECT SHEET GRID
- LIMITS OF CONSTRUCTION
- AREAS OUTSIDE LOC
- ELECTRICAL MANHOLE (BY OTHERS)

SITE PLAN APPROVAL SHEET 16 OF 46
FILE NUMBER: SP-2018-0189C APPLICATION DATE: 04/26/2018
APPROVED BY COMMISSION ON _____ UNDER SECTION 112
OF CHAPTER 25-5 OF THE CITY OF AUSTIN CODE.
EXPIRATION DATE(25-5-81, LDC) 7/5/22
CASE MANAGER CHRISTINE BARTON-HOLMES
PROJECT EXPIRATION DATE (ORD. #970905-A)_____
DMPZ_____ DDZ_____
DIRECTOR, DEVELOPMENT SERVICES DEPARTMENT
RELEASED FOR GENERAL COMPLIANCE: 7/5/19 ZONING P
Rev. 1 _____ Correction 1 _____
Rev. 2 _____ Correction 2 _____
Rev. 3 _____ Correction 3 _____
Final Plat must be recorded by the Project Expiration Date, if applicable. Subsequent Site Plans which do not comply with the Code current at the time of filing, and all required Building Permits and/or a notice of construction (if a building permit is not required), must also be approved prior to the Project Expiration Date.

Development Services Department

BAR LENGTH ON ORIGINAL DRAWING EQUALS ONE INCH. ADJUST SCALE ACCORDINGLY.

AECOM
AECOM TECHNICAL SERVICES, INC.
9400 AMBERGLEN BOULEVARD
AUSTIN, TEXAS 78729
WWW.AECOM.COM
TBPE REG. NO. F-3580

STATE OF TEXAS
CASEY G. WAUTERS
93889
LICENSED
PROFESSIONAL ENGINEER
5/21/19

NO.	DATE:	DESCRIPTION

HARUTUNIAN ENGINEERING INCORPORATED
TEXAS FIRM REGISTRATION NUMBER F-2408
ENGINEERING AND ENVIRONMENTAL CONSULTANTS
305 EAST HUNTLAND DRIVE SUITE 500
AUSTIN, TEXAS 78752

REUSE OF DOCUMENTS
This document, and the designs incorporated herein, is an instrument of professional service that has been developed, designed and prepared by Harutunian Engineering, Inc., and is not to be used, in whole or in part, for any other project without giving written notice to Harutunian Engineering, Inc.

DESIGNED BY:	CW
CHECKED BY:	JNB
APPROVED BY:	SGE
SUBMITTAL DATE:	MAY 2019
SCALE:	1" = 30'

SOUTH AUSTIN REGIONAL WASTEWATER TREATMENT PLANT
ELECTRICAL SUBSTATION NO. 1 REPLACEMENT PROJECT
CIP I.D.# 3333.032

DIMENSIONAL CONTROL PLAN

PROJECT NO: 2014-300 SHT. 16 OF 46 DWG NO. A-D-057C

SP-2018-0189C

E:\8052661\1-SAR\1-0 TP ELEC S\1-B NO\1000-CIVIL\NGDOCS-CAD\10 CADD\20-SHEETS\PERMIT D:\DS\2011\05-15-2011\S\SHEETS\A-D-057C.DWG B:\ GAD\JAT DATE: 5/16/2011 10:43 AM

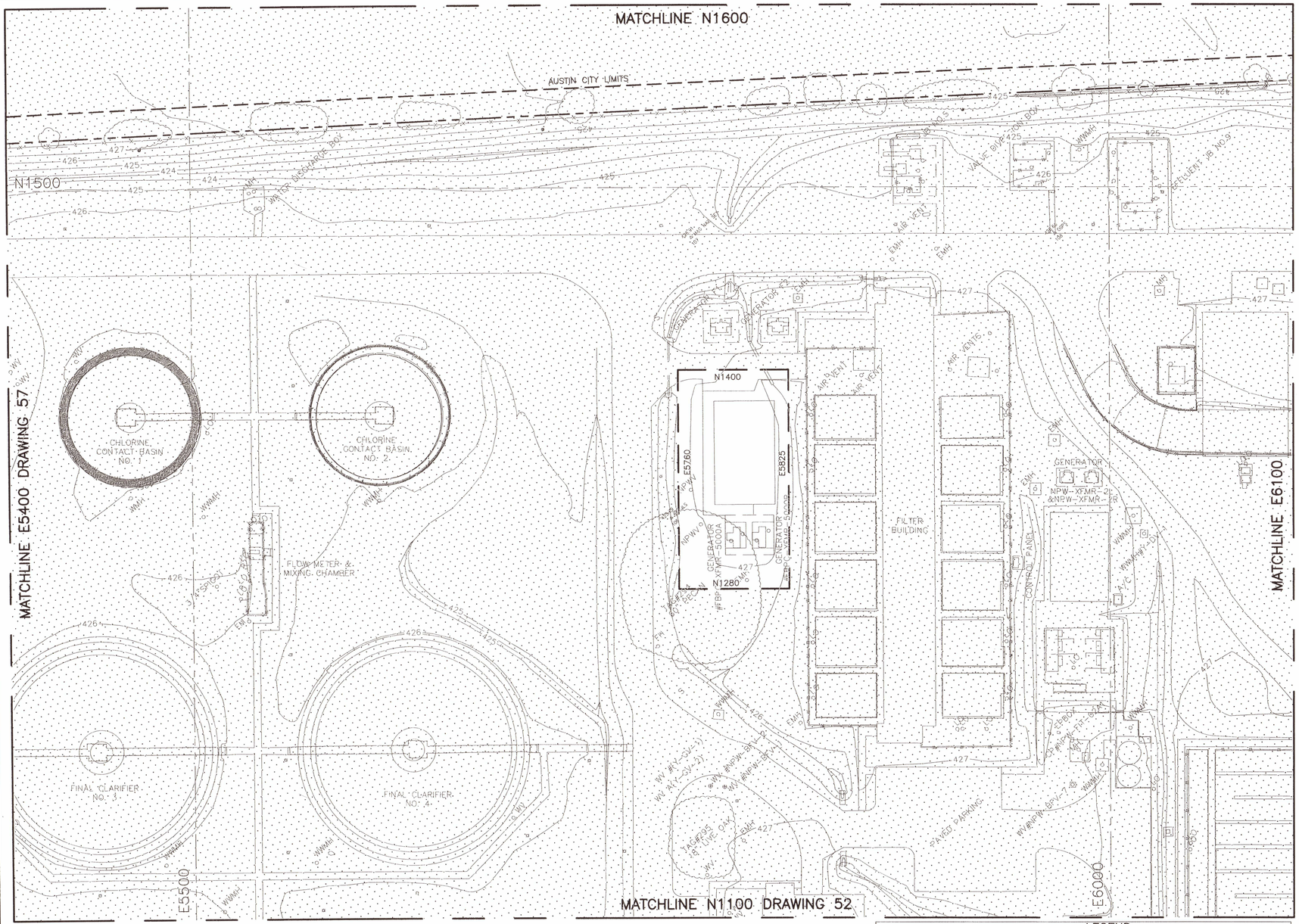

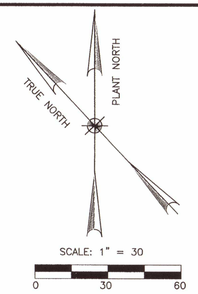

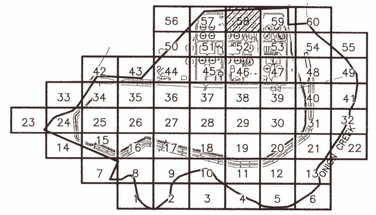

KEY LOCATION MAP
NTS

NOTES:

1. OTHER CONTRACTORS WILL BE WORKING SIMULTANEOUSLY ON THIS SITE AND SOME OF THE WORKING AREAS WILL BE SHARED BETWEEN MULTIPLE CONTRACTORS DURING THE CONTRACT WORK. REFERENCE CONTRACT DOCUMENTS FOR DETAILS REGARDING PHASING OF THE WORK AND COORDINATION WITH OTHER CONTRACTORS.
2. ACTUAL FIELD CONDITION MAY BE DIFFERENT FROM THOSE SHOWN IN THIS DRAWING. CONTRACTOR TO FIELD VERIFY INSTALLED CONDITIONS IMPACTING OR IMPACTED BY HIS WORK PRIOR TO INITIATING WORK.
3. CONTRACTOR TO COORDINATE ALL STORAGE AREAS WITH THE OWNER TO ENSURE NO ACCESS WAYS, MANHOLES OR VALVES ARE BLOCKED OR COVERED.
4. CONSTRUCTION ACCESS ROADS WILL BE USED BY MULTIPLE ON-SITE CONTRACTORS. COORDINATE USE OF THESE ROADS THROUGH THE OWNER.
5. ALL ACCESS WAYS AND DRIVEWAYS TO BE KEPT CLEAR TO ALLOW OPERATORS ACCESS TO ALL AREAS FOR MAINTENANCE AND EMERGENCIES. CONTRACTOR TO COORDINATE THE DELIVERY AND LOADING / UNLOADING OF EQUIPMENT WITH OWNER AT A MINIMUM OF 48 HOURS PRIOR TO DELIVERY.
6. CONTRACTOR TO COORDINATE THE USE OF MAIN OR ALTERNATE ENTRANCE WITH OWNER.
7. CONTRACTOR TO NOT OBSTRUCT DELIVERIES ON THE PLANT ACCESS ROAD. WORK WITHIN THE ACCESS ROAD MUST BE DONE IN A WAY THAT CAN BE COVERED TO PROVIDE DELIVERY ACCESS. ACCESS ROAD CLOSURES MUST BE AGREED UPON WITH THE CITY OF AUSTIN IN ADVANCE.

LEGEND

- PLANT COORDINATE GRID
- PROJECT SHEET GRID
- LIMITS OF CONSTRUCTION
- AREAS OUTSIDE LOC
- ELECTRICAL MANHOLE (BY OTHERS)

Development Services Department
JUL 12 2019

SITE PLAN APPROVAL SHEET 17 OF 46
FILE NUMBER: SP-2018-0189C APPLICATION DATE: 04/26/2018
APPROVED BY COMMISSION ON _____ UNDER SECTION 112
OF CHAPTER 25-5 OF THE CITY OF AUSTIN CODE.
EXPIRATION DATE(25-5-81, LDC) 7/5/22
CASE MANAGER CHRISTINE BARTON-HOLMES
PROJECT EXPIRATION DATE (ORD. #970905-A)_____
DMPZ_____ DDZ_____

DIRECTOR, DEVELOPMENT SERVICES DEPARTMENT
RELEASED FOR GENERAL COMPLIANCE: 7/5/19 ZONING P
Rev. 1 _____ Correction 1 _____
Rev. 2 _____ Correction 2 _____
Rev. 3 _____ Correction 3 _____
Final Plat must be recorded by the Project Expiration Date, if applicable. Subsequent Site Plans which do not comply with the Code current at the time of filing, and all required Building Permits and/or a notice of construction (if a building permit is not required), must also be approved prior to the Project Expiration Date.

BAR LENGTH ON ORIGINAL DRAWING EQUALS ONE INCH, ADJUST SCALE ACCORDINGLY.

AECOM
AECOM TECHNICAL SERVICES INC.
9400 AMBERGLEN BOULEVARD
AUSTIN, TEXAS 78729
WWW.AECOM.COM
TBPE REG. NO. F-358

STATE OF TEXAS
CASEY G. WAUTERS
93889
LICENSED
PROFESSIONAL ENGINEER
5/21/19

NO.	DATE:	DESCRIPTION

HARUTUNIAN ENGINEERING INCORPORATED
TEXAS FIRM REGISTRATION NUMBER F-2408
ENGINEERING AND ENVIRONMENTAL CONSULTANTS
305 EAST HUNTLAND DRIVE SUITE 500
AUSTIN, TEXAS 78752

REUSE OF DOCUMENTS
This document, and the designs incorporated herein, is an instrument of professional service that has been developed, designed and prepared by Harutunian Engineering, Inc., and is not to be used, in whole or in part, for any other project without giving written notice to Harutunian Engineering, Inc.

DESIGNED BY:	CW
CHECKED BY:	JNB
APPROVED BY:	SGE
SUBMITTAL DATE:	MAY 2019
SCALE:	1" = 30'

SOUTH AUSTIN REGIONAL WASTEWATER TREATMENT PLANT
ELECTRICAL SUBSTATION NO. 1 REPLACEMENT PROJECT
CIP I.D.# 3333.032

DIMENSIONAL CONTROL PLAN

PROJECT NO: 2014-300 | SHT. 17 OF 46 | DWG NO. A-D-058C

SP-2018-0189C

E:\80526610\SAR\ □ TP ELEC SUB NO1\□DD-□ OR□INGDOCS-CAD\310 CAD\20-SHEETS\PERMIT D D\□GS\2017\06-15-2017\SHEETS\A-D-058C\DGN BY: GAD□\AT DATE: 6/16/2017 10:43 AM

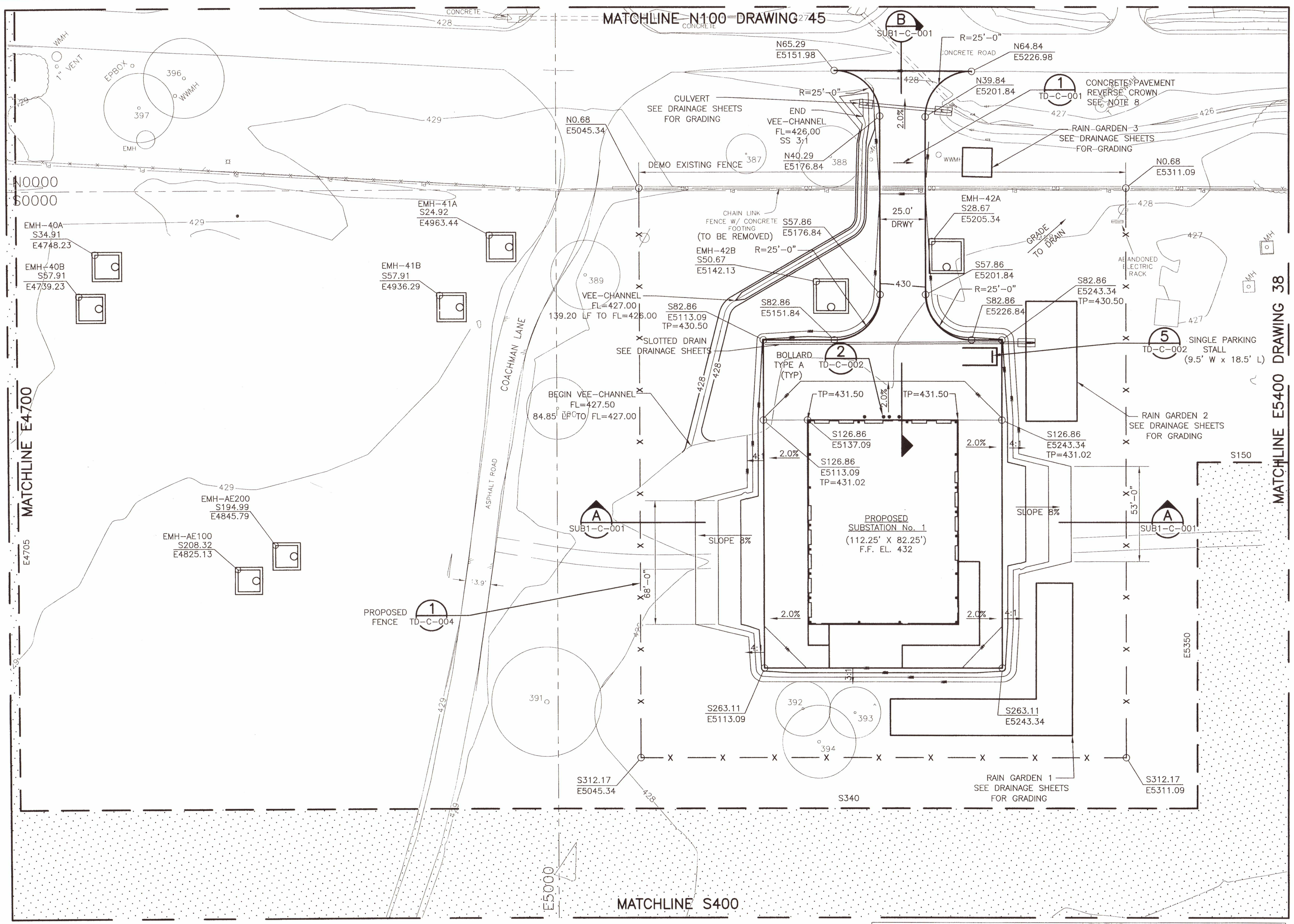

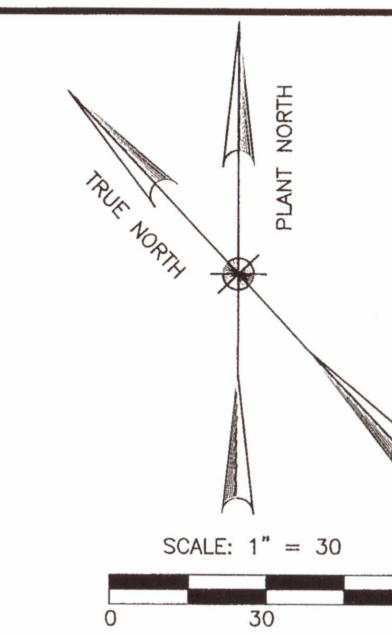

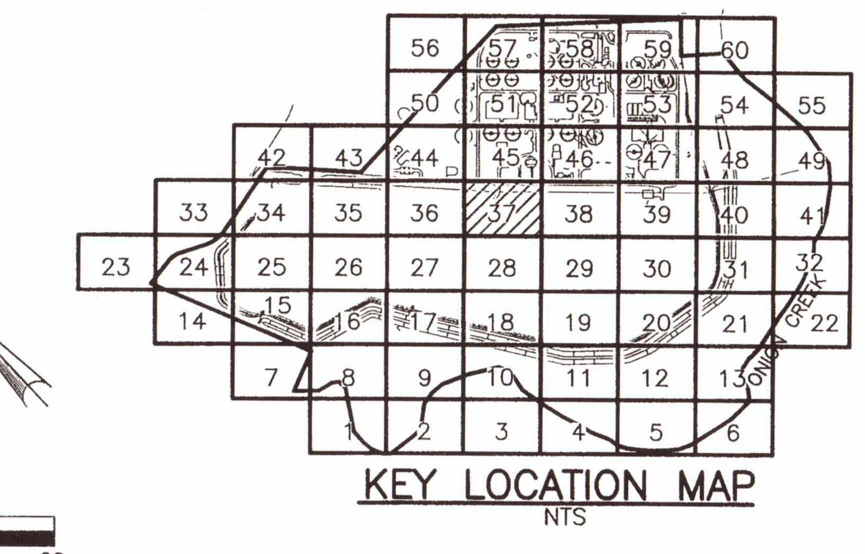

NOTES:

1. OTHER CONTRACTORS WILL BE WORKING SIMULTANEOUSLY ON THIS SITE AND SOME OF THE WORKING AREAS WILL BE SHARED BETWEEN MULTIPLE CONTRACTORS DURING THE CONTRACT WORK. REFERENCE CONTRACT DOCUMENTS FOR DETAILS REGARDING PHASING OF THE WORK AND COORDINATION WITH OTHER CONTRACTORS.
2. ACTUAL FIELD CONDITION MAY BE DIFFERENT FROM THOSE SHOWN IN THIS DRAWING. CONTRACTOR TO FIELD VERIFY INSTALLED CONDITIONS IMPACTING OR IMPACTED BY HIS WORK PRIOR TO INITIATING WORK.
3. CONTRACTOR TO COORDINATE ALL STORAGE AREAS WITH THE OWNER TO ENSURE NO ACCESS WAYS, MANHOLES OR VALVES ARE BLOCKED OR COVERED.
4. CONSTRUCTION ACCESS ROADS WILL BE USED BY MULTIPLE ON-SITE CONTRACTORS. COORDINATE USE OF THESE ROADS THROUGH THE OWNER.
5. ALL ACCESS WAYS AND DRIVEWAYS TO BE KEPT CLEAR TO ALLOW OPERATORS ACCESS TO ALL AREAS FOR MAINTENANCE AND EMERGENCIES. CONTRACTOR TO COORDINATE THE DELIVERY AND LOADING / UNLOADING OF EQUIPMENT WITH OWNER AT A MINIMUM OF 48 HOURS PRIOR TO DELIVERY.
6. CONTRACTOR TO COORDINATE THE USE OF MAIN OR ALTERNATE ENTRANCE WITH OWNER.
7. CONTRACTOR TO NOT OBSTRUCT DELIVERIES ON THE PLANT ACCESS ROAD. WORK WITHIN THE ACCESS ROAD MUST BE DONE IN A WAY THAT CAN BE COVERED TO PROVIDE DELIVERY ACCESS. ACCESS ROAD CLOSURES MUST BE AGREED UPON WITH THE CITY OF AUSTIN IN ADVANCE.
8. DRIVEWAY TO PROPOSED SUBSTATION No. 1 SHALL BE REVERSE CROWN TYPE SLOPING DOWN TOWARDS PLANT EAST.
9. RESTORE GRADE TO EXISTING CONDITIONS AFTER DUCTBANK CONSTRUCTION.

Development Services Department
JUL 10 2019

SITE PLAN APPROVAL SHEET 18 OF 46
FILE NUMBER: SP-2018-0189C APPLICATION DATE: 04/26/2018
APPROVED BY COMMISSION ON ________ UNDER SECTION 112
OF CHAPTER 25-5 OF THE CITY OF AUSTIN CODE.
EXPIRATION DATE(25-5-81, LDC) 7/3/22
CASE MANAGER CHRISTINE BARTON-HOLMES
PROJECT EXPIRATION DATE (ORD. #970905-A)________
DWPZ____ DDZ____

DIRECTOR, DEVELOPMENT SERVICES DEPARTMENT
RELEASED FOR GENERAL COMPLIANCE: 7/3/19 ZONING P
Rev. 1 ________ Correction 1 ________
Rev. 2 ________ Correction 2 ________
Rev. 3 ________ Correction 3 ________
Final Plat must be recorded by the Project Expiration Date, if applicable. Subsequent Site Plans which do not comply with the Code current at the time of filing, and all required Building Permits and/or a notice of construction (if a building permit is not required), must also be approved prior to the Project Expiration Date.

LEGEND

PLANT COORDINATE GRID	ELECTRICAL MANHOLE (BY OTHERS)
PROJECT SHEET GRID	PAVED ROAD
LIMITS OF CONSTRUCTION	
AREAS OUTSIDE LOC	

BAR LENGTH ON ORIGINAL DRAWING EQUALS ONE INCH, ADJUST SCALE ACCORDINGLY.

AECOM
AECOM TECHNICAL SERVICES INC.
9400 AMBERGLEN BOULEVARD
AUSTIN, TEXAS 78729
WWW.AECOM.COM
TBPE REG. NO. F-3580

STATE OF TEXAS
CASEY G. WAUTERS
93889
LICENSED
PROFESSIONAL ENGINEER
5/24/19

NO.	DATE:	DESCRIPTION

HARUTUNIAN ENGINEERING INCORPORATED
TEXAS FIRM REGISTRATION NUMBER F-2408
ENGINEERING AND ENVIRONMENTAL CONSULTANTS
305 EAST HUNTLAND DRIVE SUITE 500
AUSTIN, TEXAS 78752

REUSE OF DOCUMENTS
This document, and the designs incorporated herein, is an instrument of professional service that has been developed, designed and prepared by Harutunian Engineering, Inc., and is not to be used, in whole or in part, for any other project without giving written notice to Harutunian Engineering, Inc.

DESIGNED BY: CW
CHECKED BY: JNB
APPROVED BY: SGE
SUBMITTAL DATE: MAY 2019
SCALE: 1" = 30'

SOUTH AUSTIN REGIONAL WASTEWATER TREATMENT PLANT
ELECTRICAL SUBSTATION NO. 1 REPLACEMENT PROJECT
CIP I.D.# 3333.032

EXCAVATION, GRADING AND PAVING PLAN

PROJECT NO: 2014-300 SHT. 18 OF 46 DWG NO. S-C-037C

SP-2018-0189C

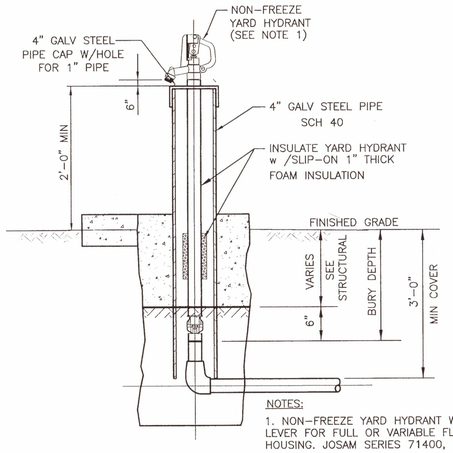

NOTES:

1. NON–FREEZE YARD HYDRANT WITH CAST IRON HEAD. CAM–TYPE OPERATING CONTROL LEVER FOR FULL OR VARIABLE FLOW. HYDRANT IS EQUIPPED WITH DRAIN PORT IN VALVE HOUSING. JOSAM SERIES 71400, ZURN Z1395, OR EQUAL.

NON–FREEZE YARD HYDRANT DETAIL 1

SCALE: NTS

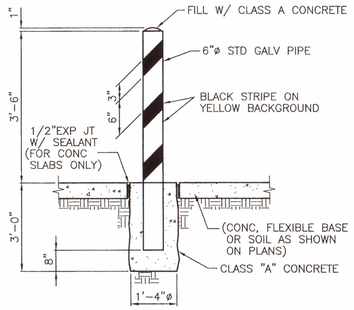

TYPE A

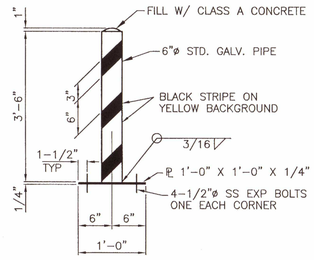

TYPE B

(MUST BE APPROVED BY ENGINEER)

BOLLARD DETAIL 2

SCALE: NTS

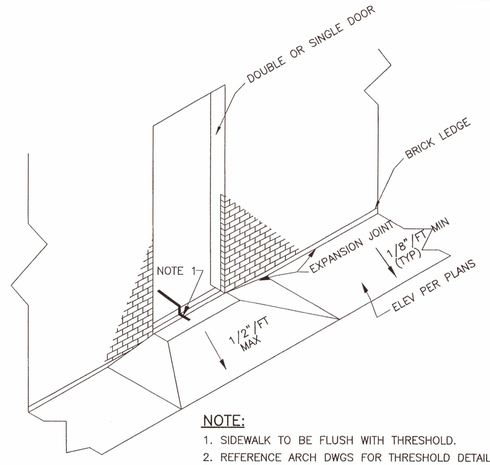

NOTE:

1. SIDEWALK TO BE FLUSH WITH THRESHOLD.
2. REFERENCE ARCH DWGS FOR THRESHOLD DETAIL.

SIDEWALK AT DOOR DETAIL 3

SCALE: NTS

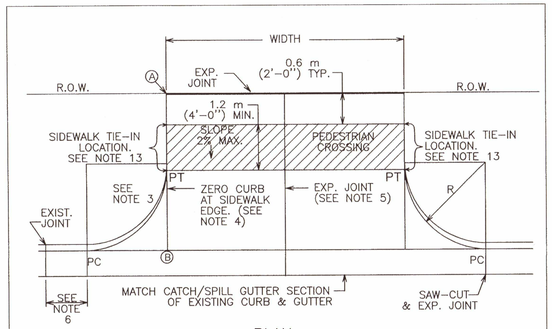

PLAN

NOTE: ALL DRIVEWAYS SHALL BE SLOPED TOWARDS THE STREET FROM THE R.O.W. LINE. ELEVATION OF POINT Ⓐ ABOVE POINT Ⓑ IS, TYPICALLY A MINIMUM OF 150 mm (6") PLUS 20 mm/m (1/4" RISE/FOOT) OVER DISTANCE "X" IN METERS (FEET).

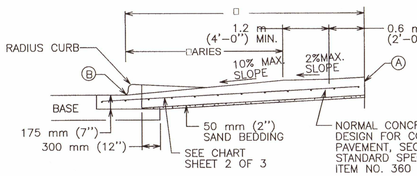

CROSS SECTION

CITY OF AUSTIN DEPARTMENT OF PUBLIC WORKS		TYPE II DRIVEWAY	
RECORD COPY SIGNED BY CUONG TRAN	02/24/10 ADOPTED	THE ARCHITECT/ENGINEER ASSUMES RESPONSIBILITY FOR APPROPRIATE USE OF THIS STANDARD	STANDARD NO. 433S-2 1 OF 2

USE	THICKNESS	REINFORCEMENT
DRIVEWAYS FOR PASSENGER VEHICLE PARKING LOTS	150 mm (6") MIN.	125 mm (5") MIN. CONCRETE WITH ONE LAYER OF 13M (#4) BARS PLACED ON CHAIRS AT MIDDEPTH OF SLAB AT NO MORE THAN 450 mm (18") O.C. BOTH DIRECTIONS
ALL OTHERS	175 mm (7") MIN.	125 mm (5") MIN. CONCRETE WITH ONE LAYER OF 13M (#4) BARS PLACED ON CHAIRS AT MIDDEPTH OF SLAB AT NO MORE THAN 450 mm (18") O.C. BOTH DIRECTIONS

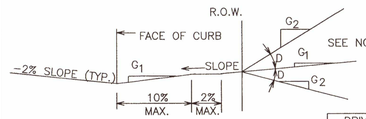

DRIVEWAY VOLUME (ADT)	D=GRADE CHANGE STD.	MAX
>1500	0%	3%
500–1500	3%	6%
< 500	6%	15%

ALLOWABLE GRADES

NOTES:

1. ALL TYPE II DRIVEWAYS SHALL HAVE RADIUS ENDS.
2. DRIVEWAY WIDTHS AND RADII DIMENSIONS, ONE/TWO WAY TRAVEL REQUIREMENTS, AND GEOMETRIC LAY–OUT ARE HIGHLY VARIABLE, SUBJECT TO SITE SPECIFIC CONDITIONS AND REQUIREMENTS. SEE TRANSPORTATION CRITERIA MANUAL, SECTION 5 "DRIVEWAYS".
3. THE DRIVEWAY EDGE SHALL BE SMOOTHLY TRANSITIONED INTO THE SIDEWALK TIE–IN LOCATION BEGINNING AT THE RADIUS PC LINE.
4. "ZERO" CURB AT PT OR SIDEWALK EDGE, WHICHEVER IS ENCOUNTERED FIRST.
5. PLACE AN EXPANSION JOINT DOWN THE CENTER OF DRIVEWAY ALL DRIVEWAYS.
6. IF DIMENSION IS LESS THAN 1.5 METERS (5 FEET), REMOVE CURB AND GUTTER TO EXISTING JOINT AND POUR MONOLITHICALLY WITH DRIVEWAY.
7. IF THE BASE IS OVER–EXCAVATED WHERE THE CURB AND GUTTER WERE REMOVED, BACKFILL WITH CONCRETE MONOLITHICALLY WITH THE DRIVEWAY.
8. TYPE II DRIVEWAYS ARE TO BE LOCATED NO CLOSER TO THE CORNER OF INTERSECTING RIGHT OF WAY THAN 60% OF PARCEL FRONTAGE AT 30 METERS (100 FEET): WHICHEVER IS LESS.
9. DRIVEWAY SHALL NOT BE CONSTRUCTED WITHIN THE CURB RETURN OF A STREET INTERSECTION.
10. WHILE THE PROPERTY OWNER REMAINS RESPONSIBLE FOR GRADE BREAKS WITHIN PRIVATE PROPERTY, THE FIRE DEPARTMENT SHALL BE CONSULTED WHERE THE DRIVEWAY IS ESSENTIAL TO EMERGENCY VEHICLE ACCESS AND "G2 IS GREATER THAN 15%.
11. USE 12 MM (1/2") ASPHALT BOARD OR OTHER APPROVED MATERIAL FOR CURB AND GUTTER EXPANSION JOINTS. SIDEWALK, AT THE R.O.W. LINE AND AT MIDWIDTH, SEE NOTE 5.
12. SEE TRANSPORTATION CRITERIA MANUAL, SECTION 5 FOR OTHER DRIVEWAY REQUIREMENTS.
13. THE SIDEWALK, REGARDLESS OF ITS LOCATION WITH RESPECT TO THE CURB OR PROPERTY LINE, SHALL BE CONNECTED TO THE DRIVEWAY AT THESE LOCATIONS.
14. WATER METER BOXES AND WASTEWATER CLEAN OUTS ARE PROHIBITED FROM BEING LOCATED IN DRIVEWAY AREAS.

CITY OF AUSTIN DEPARTMENT OF PUBLIC WORKS		TYPE II DRIVEWAY	
RECORD COPY SIGNED BY CUONG TRAN	02/24/10 ADOPTED	THE ARCHITECT/ENGINEER ASSUMES RESPONSIBILITY FOR APPROPRIATE USE OF THIS STANDARD	STANDARD NO. 433S-2 2 OF 2

DRIVEWAY 4

SCALE: NTS

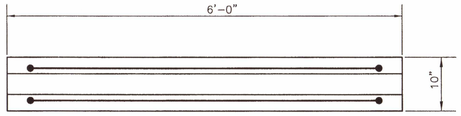

PLAN

SHOWING DIMENSIONS

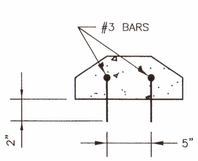

CROSS SECTION

SHOWING STEEL

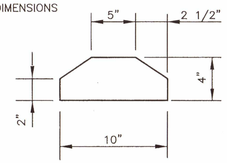

END VIEW

SHOWING DIMENSIONS

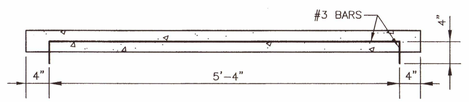

LONGITUDINAL SECTION

SHOWING STEEL

NOTE: ALL CONCRETE TO BE CLASS A

TIRE STOP DETAIL 6

SCALE: NTS

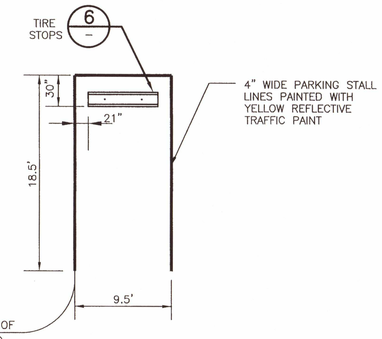

NOTE:

1. DETAIL REPRESENTS TYPICAL STALL LAYOUT. NUMBER AND TYPE OF STALLS ARE SHOWN ON SITE PLAN.

SINGLE PARKING STALL LAYOUT 5

SCALE: NTS

SITE PLAN APPROVAL SHEET 19 OF 46
FILE NUMBER: SP–2018–0189C APPLICATION DATE: 04/26/2018
APPROVED BY COMMISSION ON _____ UNDER SECTION 112
OF CHAPTER 25–5 OF THE CITY OF AUSTIN CODE.
EXPIRATION DATE(25–5–81, LDC) 7/5/22
CASE MANAGER CHRISTINE BARTON–HOLMES
PROJECT EXPIRATION DATE (ORD. #970905–A)_____
DMPZ____ DDZ____
DIRECTOR, DEVELOPMENT SERVICES DEPARTMENT
RELEASED FOR GENERAL COMPLIANCE: 7/3/19 ZONING P
Rev. 1 _____ Correction 1 _____
Rev. 2 _____ Correction 2 _____
Rev. 3 _____ Correction 3 _____
Final Plat must be recorded by the Project Expiration Date, if applicable. Subsequent Site Plans which do not comply with the Code current at the time of filing, and all required Building Permits and/or a notice of construction (if a building permit is not required), must also be approved prior to the Project Expiration Date.

Development Services Department
JUL 12 2019

BAR LENGTH ON ORIGINAL DRAWING EQUALS ONE INCH. ADJUST SCALE ACCORDINGLY.

AECOM
AECOM TECHNICAL SERVICES INC.
9400 AMBERGLEN BOULEVARD
AUSTIN, TEXAS 78729
WWW.AECOM.COM
TBPE REG. NO. F–3580

STATE OF TEXAS
CASEY G. WAUTERS
93889
LICENSED
PROFESSIONAL ENGINEER
5/21/19

NO.	DATE:	DESCRIPTION

HARUTUNIAN ENGINEERING INCORPORATED
TEXAS FIRM REGISTRATION NUMBER F–2408
ENGINEERING AND ENVIRONMENTAL CONSULTANTS
305 EAST HUNTLAND DRIVE SUITE 500
AUSTIN, TEXAS 78752

REUSE OF DOCUMENTS
This document, and the designs incorporated herein, is an instrument of professional service that has been developed, designed and prepared by Harutuian Engineering, Inc., and is not to be used, in whole or in part, for any other project without giving written notice to Harutuian Engineering, Inc.

DESIGNED BY:	CW
CHECKED BY:	JNB
APPROVED BY:	SGE
SUBMITTAL DATE:	MAY 2019
SCALE:	AS NOTED

SOUTH AUSTIN REGIONAL WASTEWATER TREATMENT PLANT
ELECTRICAL SUBSTATION NO. 1 REPLACEMENT PROJECT
CIP I.D.# 3333.032

STANDARD CIVIL DETAILS – SHEET 2

PROJECT NO: 2014–300 SHT. 19 OF 46 DWG NO. TD–C–002B

SP–2018–0189C

E:\605266\13\SAR\□□TP ELEC SUB NO.1\3D□□\ORIG\3DOCS-CAD\3D-S□\SEET\SPERMIT D D□ GS\2001\05-15-2013\SHEETS\STD-C-002B2D□.G B□: N□NGARA□□ DATE: 5/24/2013 10:30 AM

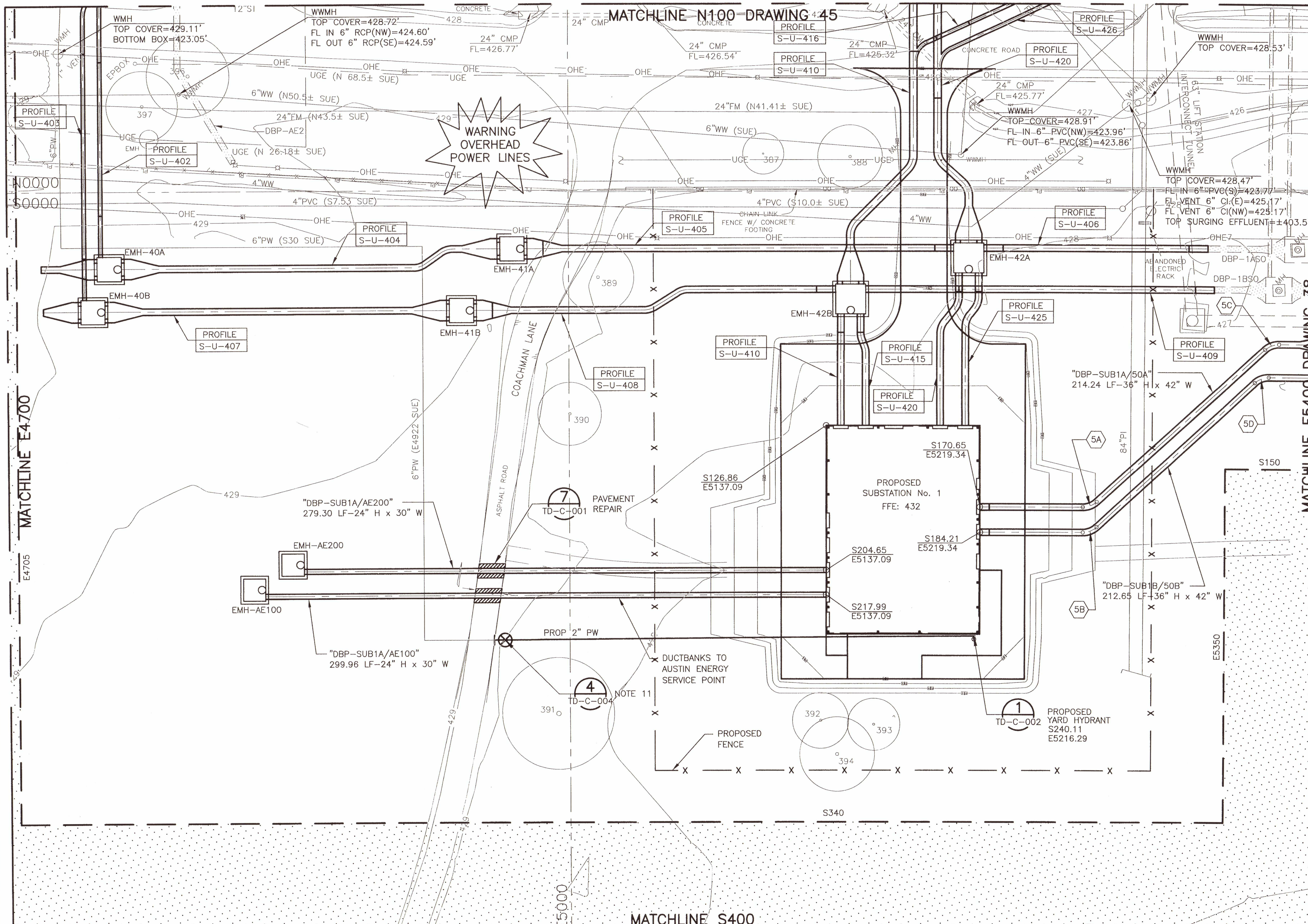

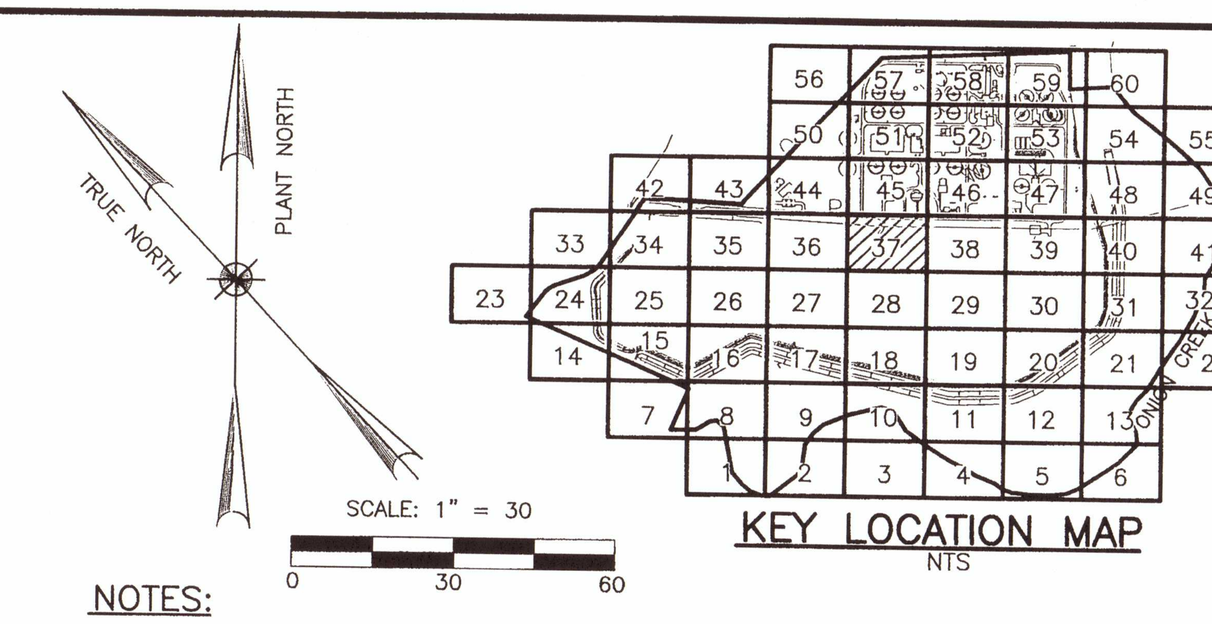

NOTES:

1. OTHER CONTRACTORS WILL BE WORKING SIMULTANEOUSLY ON THIS SITE AND SOME OF THE WORKING AREAS WILL BE SHARED BETWEEN MULTIPLE CONTRACTORS DURING THE CONTRACT WORK. REFERENCE CONTRACT DOCUMENTS FOR DETAILS REGARDING PHASING OF THE WORK AND COORDINATION WITH OTHER CONTRACTORS.
2. ACTUAL FIELD CONDITION MAY BE DIFFERENT FROM THOSE SHOWN IN THIS DRAWING. CONTRACTOR TO FIELD VERIFY INSTALLED CONDITIONS IMPACTING OR IMPACTED BY HIS WORK PRIOR TO INITIATING WORK.
3. CONTRACTOR TO COORDINATE ALL STORAGE AREAS WITH THE OWNER TO ENSURE NO ACCESS WAYS, MANHOLES OR VALVES ARE BLOCKED OR COVERED.
4. CONSTRUCTION ACCESS ROADS WILL BE USED BY MULTIPLE ON-SITE CONTRACTORS. COORDINATE USE OF THESE ROADS THROUGH THE OWNER.
5. ALL ACCESS WAYS AND DRIVEWAYS TO BE KEPT CLEAR TO ALLOW OPERATORS ACCESS TO ALL AREAS FOR MAINTENANCE AND EMERGENCIES. CONTRACTOR TO COORDINATE THE DELIVERY AND LOADING / UNLOADING OF EQUIPMENT WITH OWNER AT A MINIMUM OF 48 HOURS PRIOR TO DELIVERY.
6. CONTRACTOR TO COORDINATE THE USE OF MAIN OR ALTERNATE ENTRANCE WITH OWNER.
7. CONTRACTOR TO NOT OBSTRUCT DELIVERIES ON THE PLANT ACCESS ROAD. WORK WITHIN THE ACCESS ROAD MUST BE DONE IN A WAY THAT CAN BE COVERED TO PROVIDE DELIVERY ACCESS. ACCESS ROAD CLOSURES MUST BE AGREED UPON WITH THE CITY OF AUSTIN IN ADVANCE.
8. THE LOCATION OF EXISTING UTILITIES SHOWN ON THIS DRAWING IS FROM AVAILABLE RECORD INFORMATION WHICH MAY NOT BE COMPLETE OR ACCURATE, AND FROM SURFACE EVIDENCE SURVEYED ON THE GROUND. CONTRACTOR IS RESPONSIBLE FOR FIELD VERIFYING THE LOCATION AND ELEVATION OF EXISTING UTILITIES PRIOR TO CONSTRUCTION.
9. REFERENCE DRAWINGS IDENTIFIED IN THE SCHEDULE ARE PROVIDED FOR REFERENCE ONLY. ACTUAL FIELD CONDITION MAY BE DIFFERENT FROM THOSE SHOWN IN THE REFERENCE DRAWINGS. CONTRACTOR TO FIELD VERIFY INSTALLED CONDITIONS IMPACTING OR IMPACTED BY HIS WORK PRIOR TO INITIATING WORK.
10. MAINTAIN EQUIPMENT CLEARANCES TO OVERHEAD POWER LINES IN COMPLIANCE WITH OSHA AND STATUTORY REQUIREMENTS. COORDINATE WITH AUSTIN ENERGY FOR EXCAVATIONS IN THE VICINITY OF POLES AND GUY ANCHORS.
11. INSTALL NEW FH AT END OF EXISTING PW LINE. CONTRACTOR SHALL FIELD VERIFY LOCATION. REF CITY OF AUSTIN STANDARD DETAIL 511-AW-02.
12. INSTALL PW-2" AND PRESSURE TEST AND DISINFECT PER COA SPECIFICATION 510 "PIPE" PRIOR TO PLACING NEW PIPE IN SERVICE.
13. ROUTING SHOWN FOR PW-2" IS APPROXIMATE. MINOR VARIATIONS ARE ACCEPTABLE PENDING APPROVAL OF OWNER'S REPRESENTATIVE. WATERLINE TO HAVE MINIMUM 36-INCH COVER OVER TOP OF PIPE. PROVIDE THRUST RESTRAINT AT ALL BENDS.

DUCT BANK CURVE DATA

LETTER	CENTER OF RADIUS POINT	RADIUS OF CURVATURE	POINT OF CURVATURE	POINT OF TANGENCY
5A	S159.65, E5274.33	11'-0"	S170.65, E5274.33	S167.75, E5281.78
5B	S173.21, E5274.33	11'-0"	S184.21, E5274.33	S181.28, E5281.80
5C	S93.51, E5378.75	11'-0"	S85.41, E5371.30	S82.51, E5378.75
5D	S111.51, E5373.36	11'-0"	S103.44, E5365.89	S100.51, E5373.36

SITE PLAN APPROVAL SHEET 20 OF 46
FILE NUMBER: SP-2018-0189C APPLICATION DATE: 04/26/2018
APPROVED BY COMMISSION ON ______ UNDER SECTION 112
OF CHAPTER 25-5 OF THE CITY OF AUSTIN CODE.
EXPIRATION DATE(25-5-81, LDC) 7/5/22
CASE MANAGER CHRISTINE BARTON-HOLMES
PROJECT EXPIRATION DATE (ORD. #970905-A) ______
DWPZ ______ DDZ ______

DIRECTOR, DEVELOPMENT SERVICES DEPARTMENT
RELEASED FOR GENERAL COMPLIANCE: 7/5/19 ZONING P
Rev. 1 ______ Correction 1 ______
Rev. 2 ______ Correction 2 ______
Rev. 3 ______ Correction 3 ______
Final Plat must be recorded by the Project Expiration Date, if applicable. Subsequent Site Plans which do not comply with the Code current at the time of filing, and all required Building Permits and/or a notice of construction (if a building permit is not required), must also be approved prior to the Project Expiration Date.

AUSTIN FIRE DEPARTMENT
JUN 05 2019
APPROVED

LEGEND

PLANT COORDINATE GRID	ELECTRICAL MANHOLE (BY OTHERS)
PROJECT SHEET GRID	ELECTRICAL MANHOLE (PROPOSED)
LIMITS OF CONSTRUCTION	EXISTING DUCT BANKS
AREAS OUTSIDE LOC	EXISTING PIPING

BAR LENGTH ON ORIGINAL DRAWING EQUALS ONE INCH, ADJUST SCALE ACCORDINGLY.

AECOM
AECOM TECHNICAL SERVICES INC.
9400 AMBERGLEN BOULEVARD
AUSTIN, TEXAS 78729
WWW.AECOM.COM
TBPE REG. NO. F-3580

STATE OF TEXAS
CASEY G. WAUTERS
93889
LICENSED PROFESSIONAL ENGINEER
5/29/19

NO.	DATE:	DESCRIPTION

HARUTUNIAN ENGINEERING INCORPORATED
TEXAS FIRM REGISTRATION NUMBER F-2408
ENGINEERING AND ENVIRONMENTAL CONSULTANTS
305 EAST HUNTLAND DRIVE SUITE 500
AUSTIN, TEXAS 78752

REUSE OF DOCUMENTS
This document, and the designs incorporated herein, is an instrument of professional service that has been developed, designed and prepared by Harutunian Engineering, Inc., and is not to be used, in whole or in part, for any other project without giving written notice to Harutunian Engineering, Inc.

DESIGNED BY: CW
CHECKED BY: JNB
APPROVED BY: SGE
SUBMITTAL DATE: MAY 2019
SCALE: 1" = 30'

SOUTH AUSTIN REGIONAL WASTEWATER TREATMENT PLANT
ELECTRICAL SUBSTATION NO. 1 REPLACEMENT PROJECT
CIP I.D.# 3333.032

SITE UTILITIES – DUCT BANK (CIVIL) – PROPOSED

PROJECT NO: 2014-300 SHT. 20 OF 46 DWG NO. S-U-237C

SP-2018-0189C

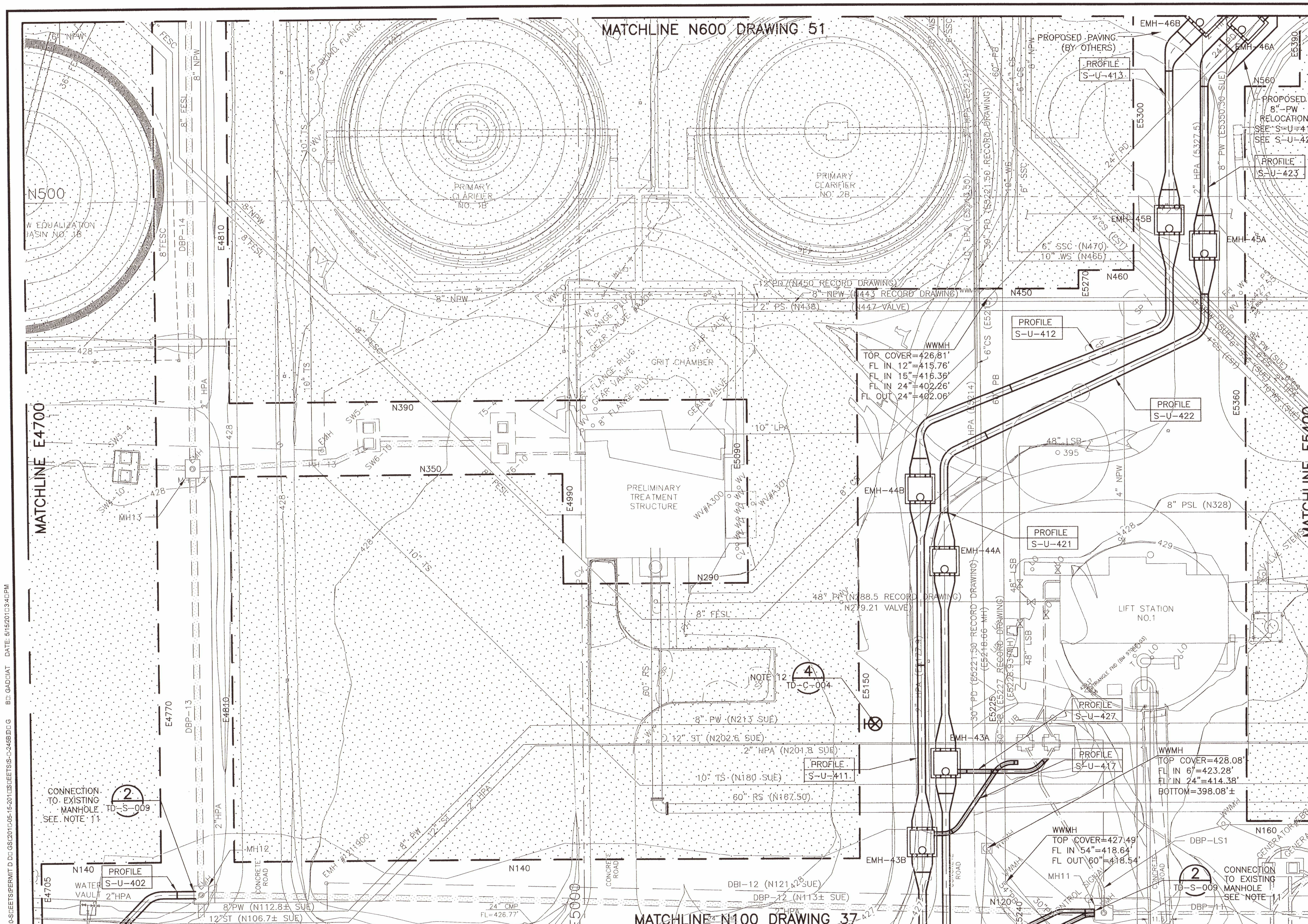

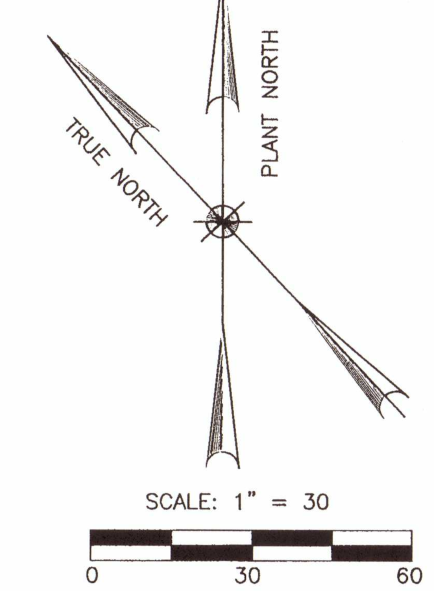

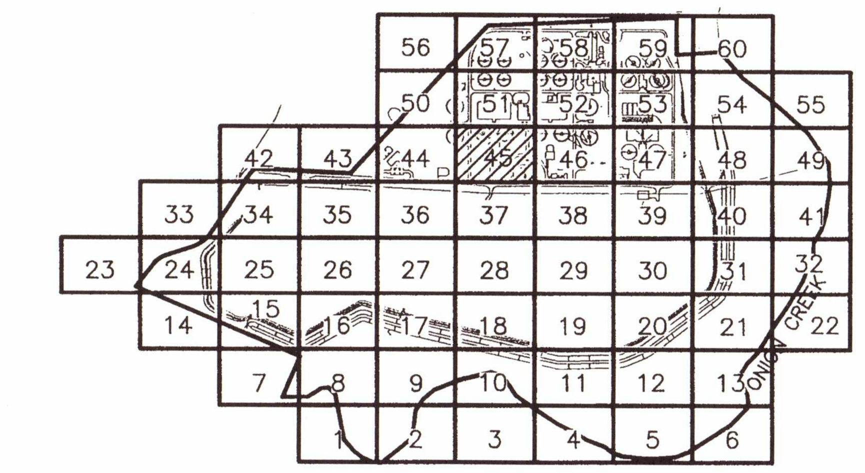

KEY LOCATION MAP

NTS

NOTES:

1. OTHER CONTRACTORS WILL BE WORKING SIMULTANEOUSLY ON THIS SITE AND SOME OF THE WORKING AREAS WILL BE SHARED BETWEEN MULTIPLE CONTRACTORS DURING THE CONTRACT WORK. REFERENCE CONTRACT DOCUMENTS FOR DETAILS REGARDING PHASING OF THE WORK AND COORDINATION WITH OTHER CONTRACTORS.
2. ACTUAL FIELD CONDITION MAY BE DIFFERENT FROM THOSE SHOWN IN THIS DRAWING. CONTRACTOR TO FIELD VERIFY INSTALLED CONDITIONS IMPACTING OR IMPACTED BY HIS WORK PRIOR TO INITIATING WORK.
3. CONTRACTOR TO COORDINATE ALL STORAGE AREAS WITH THE OWNER TO ENSURE NO ACCESS WAYS, MANHOLES OR VALVES ARE BLOCKED OR COVERED.
4. CONSTRUCTION ACCESS ROADS WILL BE USED BY MULTIPLE ON-SITE CONTRACTORS. COORDINATE USE OF THESE ROADS THROUGH THE OWNER.
5. ALL ACCESS WAYS AND DRIVEWAYS TO BE KEPT CLEAR TO ALLOW OPERATORS ACCESS TO ALL AREAS FOR MAINTENANCE AND EMERGENCIES. CONTRACTOR TO COORDINATE THE DELIVERY AND LOADING / UNLOADING OF EQUIPMENT WITH OWNER AT A MINIMUM OF 48 HOURS PRIOR TO DELIVERY.
6. CONTRACTOR TO COORDINATE THE USE OF MAIN OR ALTERNATE ENTRANCE WITH OWNER.
7. CONTRACTOR TO NOT OBSTRUCT DELIVERIES ON THE PLANT ACCESS ROAD. WORK WITHIN THE ACCESS ROAD MUST BE DONE IN A WAY THAT CAN BE COVERED TO PROVIDE DELIVERY ACCESS. ACCESS ROAD CLOSURES MUST BE AGREED UPON WITH THE CITY OF AUSTIN IN ADVANCE.
8. THE LOCATION OF EXISTING UTILITIES SHOWN ON THIS DRAWING IS FROM AVAILABLE RECORD INFORMATION WHICH MAY NOT BE COMPLETE OR ACCURATE, AND FROM SURFACE EVIDENCE SURVEYED ON THE GROUND. CONTRACTOR IS RESPONSIBLE FOR FIELD VERIFYING THE LOCATION AND ELEVATION OF EXISTING UTILITIES PRIOR TO CONSTRUCTION.
9. REFERENCE DRAWINGS IDENTIFIED IN THE SCHEDULE ARE PROVIDED FOR REFERENCE ONLY. ACTUAL FIELD CONDITION MAY BE DIFFERENT FROM THOSE SHOWN IN THE REFERENCE DRAWINGS. CONTRACTOR TO FIELD VERIFY INSTALLED CONDITIONS IMPACTING OR IMPACTED BY HIS WORK PRIOR TO INITIATING WORK.
10. MAINTAIN EQUIPMENT CLEARANCES TO OVERHEAD POWER LINES IN COMPLIANCE WITH OSHA AND STATUTORY REQUIREMENTS. COORDINATE WITH AUSTIN ENERGY FOR EXCAVATIONS IN THE VICINITY OF POLES AND GUY ANCHORS.
11. CONTRACTOR SHALL COORDINATE WITH OWNER FOR ELECTRICAL POWER SHUTDOWN TO EXISTING ELECTRICAL MANHOLES PRIOR TO ENTERING OR PERFORMING WORK ASSOCIATED WITH CONNECTION OF PROPOSED DUCTBANKS.
12. INSTALL NEW FH ON EXISTING PW LINE. CONTRACTOR SHALL FIELD VERIFY LOCATION. REF CITY OF AUSTIN STANDARD DETAIL 511-AW-02.

Development Services Department JUL 10 2019

LEGEND

PLANT COORDINATE GRID	ELECTRICAL MANHOLE (BY OTHERS)
PROJECT SHEET GRID	ELECTRICAL MANHOLE (PROPOSED)
LIMITS OF CONSTRUCTION	EXISTING DUCT BANKS
AREAS OUTSIDE LOC	EXISTING PIPING

AUSTIN FIRE DEPARTMENT JUN 05 2019 APPROVED

SITE PLAN APPROVAL SHEET 21 OF 46
FILE NUMBER: SP-2018-0189C APPLICATION DATE: 04/26/2018
APPROVED BY COMMISSION ON ________ UNDER SECTION 112
OF CHAPTER 25-5 OF THE CITY OF AUSTIN CODE.
EXPIRATION DATE(25-5-81, LDC) 7/3/22
CASE MANAGER CHRISTINE BARTON-HOLMES
PROJECT EXPIRATION DATE (ORD. #970905-A)________
DWPZ____ DDZ____

DIRECTOR, DEVELOPMENT SERVICES DEPARTMENT
RELEASED FOR GENERAL COMPLIANCE: 7/3/19 ZONING P
Rev. 1 ____________ Correction 1 ____________
Rev. 2 ____________ Correction 2 ____________
Rev. 3 ____________ Correction 3 ____________
Final Plat must be recorded by the Project Expiration Date, if applicable. Subsequent Site Plans which do not comply with the Code current at the time of filing, and all required Building Permits and/or a notice of construction (if a building permit is not required), must also be approved prior to the Project Expiration Date.

BAR LENGTH ON ORIGINAL DRAWING EQUALS ONE INCH, ADJUST SCALE ACCORDINGLY.

AECOM — AECOM TECHNICAL SERVICES, INC. 9400 AMBERGLEN BOULEVARD AUSTIN, TEXAS 78729 WWW.AECOM.COM TBPE REG. NO. F-3580

STATE OF TEXAS — CASEY G. WAUTERS 93889 LICENSED PROFESSIONAL ENGINEER 5/24/19

NO.	DATE:	DESCRIPTION

HARUTUNIAN ENGINEERING INCORPORATED
TEXAS FIRM REGISTRATION NUMBER F-2408
ENGINEERING AND ENVIRONMENTAL CONSULTANTS
305 EAST HUNTLAND DRIVE SUITE 500
AUSTIN, TEXAS 78752

REUSE OF DOCUMENTS
This document, and the designs incorporated herein, is an instrument of professional service that has been developed, designed and prepared by Harutunian Engineering, Inc., and is not to be used, in whole or in part, for any other project without giving written notice to Harutunian Engineering, Inc.

DESIGNED BY: CW
CHECKED BY: JNB
APPROVED BY: SGE
SUBMITTAL DATE: MAY 2019
SCALE: 1" = 30'

SOUTH AUSTIN REGIONAL WASTEWATER TREATMENT PLANT
ELECTRICAL SUBSTATION NO. 1 REPLACEMENT PROJECT
CIP I.D.# 3333.032

SITE UTILITIES – DUCT BANK (CIVIL) – PROPOSED

PROJECT NO: 2014-300 SHT. 21 OF 46 DWG NO. S-U-245B

SP-2018-0189C

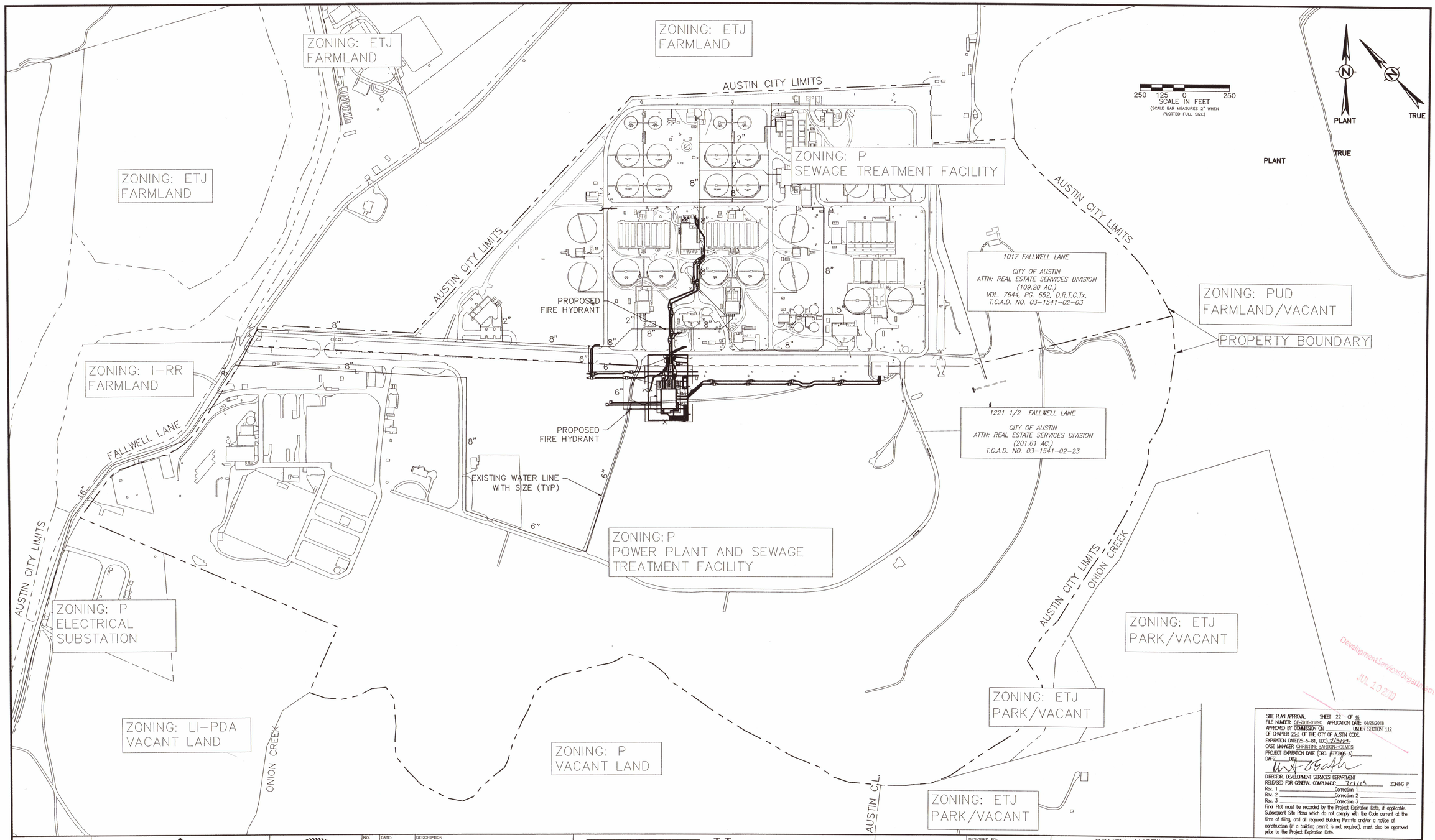

Development Services Department
JUL 10 2019

SITE PLAN APPROVAL SHEET 22 OF 46
FILE NUMBER: SP-2018-0189C APPLICATION DATE: 04/26/2018
APPROVED BY COMMISSION ON _____ UNDER SECTION 112
OF CHAPTER 25-5 OF THE CITY OF AUSTIN CODE.
EXPIRATION DATE(25-5-81, LDC): 7/5/19
CASE MANAGER: CHRISTINE BARTON-HOLMES
PROJECT EXPIRATION DATE (ORD. #970905-A)
DWPZ DDZ

DIRECTOR, DEVELOPMENT SERVICES DEPARTMENT
RELEASED FOR GENERAL COMPLIANCE 7/5/19 ZONING P
Rev. 1 _____ Correction 1 _____
Rev. 2 _____ Correction 2 _____
Rev. 3 _____ Correction 3 _____
Final Plat must be recorded by the Project Expiration Date, if applicable. Subsequent Site Plans which do not comply with the Code current at the time of filing, and all required Building Permits and/or a notice of construction (if a building permit is not required), must also be approved prior to the Project Expiration Date.

BAR LENGTH ON ORIGINAL DRAWING EQUALS ONE INCH, ADJUST SCALE ACCORDINGLY.

CAS CONSULTING & SERVICES, INC.
CIVIL ENGINEERING | PROGRAM MANAGEMENT | CONSTRUCTION MANAGEMENT
7908 Cameron Road | Austin, TX 78754 | REG. NO. F-003572
Main: 512.836.2388 | Fax: 512.836.4515

STATE OF TEXAS
ANDREW MICHAEL ROSTER
68364
LICENSED
PROFESSIONAL ENGINEER
5/28/2019

NO.	DATE:	DESCRIPTION

HARUTUNIAN ENGINEERING INCORPORATED
TEXAS FIRM REGISTRATION NUMBER F-2408
ENGINEERING AND ENVIRONMENTAL CONSULTANTS
305 EAST HUNTLAND DRIVE SUITE 500
AUSTIN, TEXAS 78752

REUSE OF DOCUMENTS
This document, and the designs incorporated herein, is an instrument of professional service that has been developed, designed and prepared by Harutunian Engineering, Inc., and is not to be used, in whole or in part, for any other project without giving written notice to Harutunian Engineering, Inc.

DESIGNED BY:	CAS
CHECKED BY:	LR
APPROVED BY:	AMR
SUBMITTAL DATE:	MAY 2019
SCALE:	1"=250'

SOUTH AUSTIN REGIONAL WASTEWATER TREATMENT PLANT
ELECTRICAL SUBSTATION NO. 1 REPLACEMENT PROJECT
CIP I.D.# 3333.032

PROPERTY BOUNDARY

PROJECT NO: 2014-300 | SHT. 22 OF 46 | DWG NO. G-C-001A

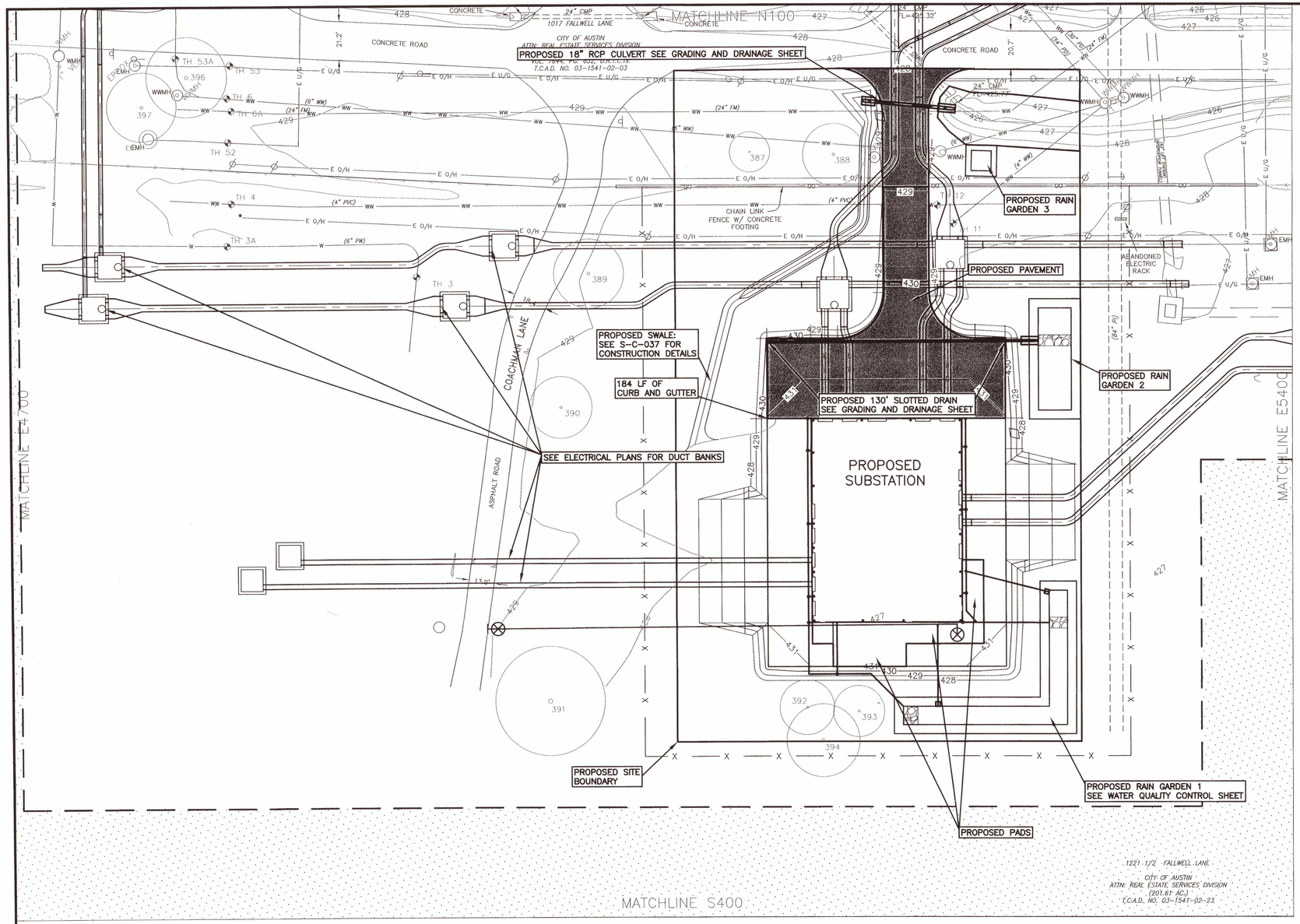

PLANT TRUE

SCALE IN FEET
30 0 30
(SCALE BAR MEASURES 2" WHEN PLOTTED FULL SIZE)

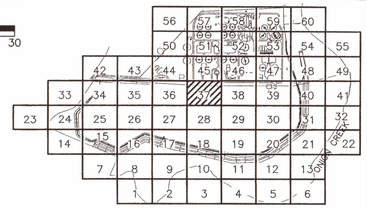

KEY LOCATION MAP
NTS

LEGEND
- LIMITS OF CONSTRUCTION
- EXISTING TREE TO REMAIN
- OUTSIDE LIMITS OF CONSTRUCTION
- DIRECTION OF FLOW
- PROPOSED CONTOURS
- PROPOSED PAVEMENT

AUSTIN FIRE DEPARTMENT
JUN 05 2019
APPROVED

APPENDIX Q-2
IMPERVIOUS COVER

SUBURBAN WATERSHEDS

IMPERVIOUS COVER ALLOWED AT 80 % X GROSS SITE AREA = 140.48 ACRES

ALLOWABLE IMPERVIOUS COVER BREAKDOWN BY SLOPE CATEGORY

TOTAL ACREAGE 15 - 25% = 0.00 X 10% = 0.0 ACRES

PROPOSED TOTAL IMPERVIOUS COVER

TOTAL PROPOSED IMPERVIOUS COVER= 33.5 ACRES= 19.08%

PROPOSED IMPERVIOUS COVER ON SLOPES

SLOPE CATEGORIES	ACRES	IMPERVIOUS COVER: BUILDING/ AND OTHER IMPERVIOUS COVER ACRES	IMPERVIOUS COVER: BUILDING/ AND OTHER IMPERVIOUS COVER % OF CATEGORY	IMPERVIOUS COVER: DRIVEWAYS/ ROADWAYS ACRES
0 - 15%	175.60	28.50	16.23	5.00
15 - 25%	0.00	0	0	0
25 - 35%	0.00	0	0	0
OVER 35%	0.00	0	0	0

TOTAL SITE AREA 175.60

Development Services Department
JUL 10 2019

REVIEWED
JUN 05 2019
Austin Water Utility
* No public improvements to water or wastewater

SITE PLAN APPROVAL SHEET 23 OF 46
FILE NUMBER: SP-2018-0189C APPLICATION DATE: 04/26/2018
APPROVED BY COMMISSION ON _____ UNDER SECTION 112
OF CHAPTER 25-5 OF THE CITY OF AUSTIN CODE.
EXPIRATION DATE(25-5-81, LDC) 7/3/22
CASE MANAGER CHRISTINE BARTON-HOLMES
PROJECT EXPIRATION DATE (ORD. #970905-A)
DMPZ DOZ
DIRECTOR, DEVELOPMENT SERVICES DEPARTMENT
RELEASED FOR GENERAL COMPLIANCE 7/3/19 ZONING P
Rev. 1 _____ Correction 1 _____
Rev. 2 _____ Correction 2 _____
Rev. 3 _____ Correction 3 _____
Final Plat must be recorded by the Project Expiration Date, if applicable. Subsequent Site Plans which do not comply with the Code current at the time of filing, and all required Building Permits and/or a notice of construction (if a building permit is not required), must also be approved prior to the Project Expiration Date.

BAR LENGTH ON ORIGINAL DRAWING EQUALS ONE INCH, ADJUST SCALE ACCORDINGLY.

CAS CONSULTING & SERVICES, INC.
CIVIL ENGINEERING | PROGRAM MANAGEMENT | CONSTRUCTION MANAGEMENT
7908 Cameron Road | Austin, TX 78754 | REG. NO. F-08572
Main: 512.836.2388 | Fax: 512.836.4515

STATE OF TEXAS
ANDREW M. MOORE
66364
LICENSED PROFESSIONAL ENGINEER
5/28/2019

NO.	DATE:	DESCRIPTION

HARUTUNIAN ENGINEERING INCORPORATED
TEXAS FIRM REGISTRATION NUMBER F-2408
ENGINEERING AND ENVIRONMENTAL CONSULTANTS
305 EAST HUNTLAND DRIVE SUITE 500
AUSTIN, TEXAS 78752

REUSE OF DOCUMENTS
This document, and the designs incorporated herein, is an instrument of professional service that has been developed, designed and prepared by Harutunian Engineering, Inc., and is not to be used, in whole or in part, for any other project without giving written notice to Harutunian Engineering, Inc.

DESIGNED BY:	CAS
CHECKED BY:	LR
APPROVED BY:	AMR
SUBMITTAL DATE:	MAY 2019
SCALE:	

SOUTH AUSTIN REGIONAL WASTEWATER TREATMENT PLANT
ELECTRICAL SUBSTATION NO. 1 REPLACEMENT PROJECT
CIP I.D.# 3333.032

SUBSTATION SITE PLAN

PROJECT NO: 2014-300 | SHT. 23 OF 46 | DWG NO. G-C-037A

NO FLOWS FROM ADJACENT PROPERTIES INTO SAR WWTP

200 100 0 200
SCALE IN FEET
(SCALE BAR MEASURES 2" WHEN PLOTTED FULL SIZE)

NORTH 59.9

SOUTH 115.7

EXISTING FLOW SPREADER

OUTSIDE 100YR FP

CONSTRUCT SLOTTED WEIR AT EXISTING WINGWALL FACE PER INSET 'A'

INSIDE 100YR FP

LEVEE

PLANT

TRUE

HYDROLOGIC SUMMARY TABLE

					Discharge (cfs)				
	CN	IC (%)	Tc	Area (Ac)	2Yr Storm	5Yr Storm	10Yr Storm	25Yr Storm	100Yr Storm
Pre-Development	61.0	0.0	79.6	175.6	29.0	88.7	142.1	224.8	375.6
Post-Project North Area	61.0	37.8	56.0	59.9	40.8	72.0	97.0	133.9	198.6
Post-Project South Area	61.0	9.4	79.6	115.7	29.8	71.8	108.1	163.5	263.6
Post-Project Pond Discharge					22.5	76.1	125.3	161.1	218.5

					2Yr Storm	5Yr Storm	10Yr Storm	25Yr Storm	100Yr Storm
Peak Pond WSEL (ft)					414.8	415.6	416.1	417.1	419.1
Peak Pond Storage (ac-ft)					6.3	9.5	11.9	16.8	27.5

INSET 'A'

5 0 5
SCALE IN FEET
(SCALE BAR MEASURES 2" WHEN PLOTTED FULL SIZE)

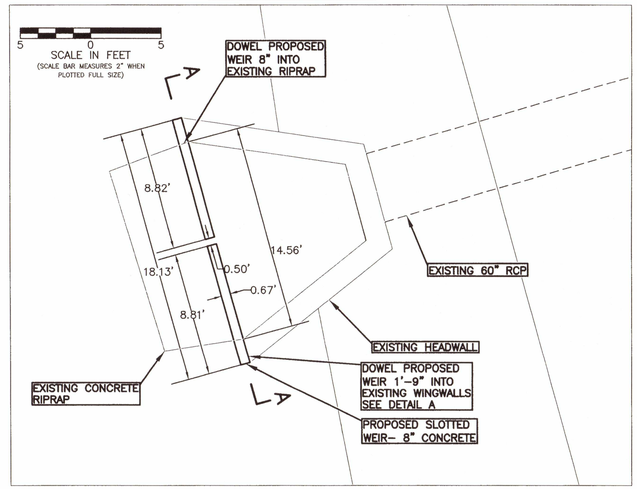

SECTION 'A-A'

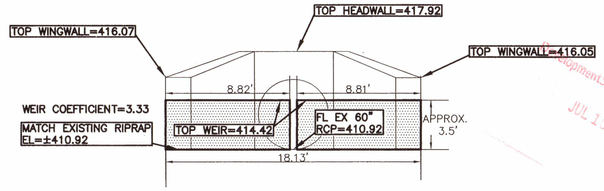

DETAIL A

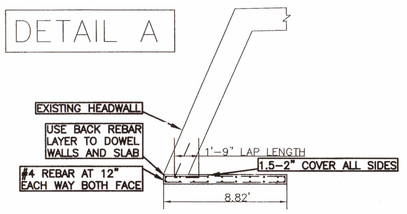

Development Services Department
JUL 1 2019

SITE PLAN APPROVAL SHEET 24 OF 46
FILE NUMBER: SP-2018-0189C APPLICATION DATE: 04/26/2018
APPROVED BY COMMISSION ON ____ UNDER SECTION 112
OF CHAPTER 25-5 OF THE CITY OF AUSTIN CODE.
EXPIRATION DATE(25-5-81, LDC) 7/1/22
CASE MANAGER CHRISTINE BARTON-HOLMES
PROJECT EXPIRATION DATE (ORD. #970905-A)
DWPZ DDA
DIRECTOR, DEVELOPMENT SERVICES DEPARTMENT
RELEASED FOR GENERAL COMPLIANCE: 7/5/19 ZONING P
Rev. 1 ____ Correction 1 ____
Rev. 2 ____ Correction 2 ____
Rev. 3 ____ Correction 3 ____
Final Plat must be recorded by the Project Expiration Date, if applicable. Subsequent Site Plans which do not comply with the Code current at the time of filing, and all required Building Permits and/or a notice of construction (if a building permit is not required), must also be approved prior to the Project Expiration Date.

BAR LENGTH ON ORIGINAL DRAWING EQUALS ONE INCH, ADJUST SCALE ACCORDINGLY.

CAS CONSULTING & SERVICES, INC.
CIVIL ENGINEERING | PROGRAM MANAGEMENT | CONSTRUCTION MANAGEMENT
7908 Cameron Road | Austin, TX 78754 | REG. NO. F-00572
Main: 512.836.2388 | Fax: 512.836.4515

STATE OF TEXAS
ANDREW M. ROOKE
66364
LICENSED PROFESSIONAL ENGINEER
5/28/2019

NO.	DATE:	DESCRIPTION

HARUTUNIAN ENGINEERING INCORPORATED
TEXAS FIRM REGISTRATION NUMBER F-2408
ENGINEERING AND ENVIRONMENTAL CONSULTANTS
305 EAST HUNTLAND DRIVE SUITE 500
AUSTIN, TEXAS 78752

REUSE OF DOCUMENTS
This document, and the designs incorporated herein, is an instrument of professional service that has been developed, designed and prepared by Harutunian Engineering, Inc., and is not to be used, in whole or in part, for any other project without giving written notice to Harutunian Engineering, Inc.

DESIGNED BY:	CAS
CHECKED BY:	LR
APPROVED BY:	AMR
SUBMITTAL DATE:	MAY 2019
SCALE:	1"=200'

SOUTH AUSTIN REGIONAL WASTEWATER TREATMENT PLANT
ELECTRICAL SUBSTATION NO. 1 REPLACEMENT PROJECT
CIP I.D.# 3333.032

DRAINAGE AREA MAP AND DETENTION PLAN

PROJECT NO: 2014-300 SHT. 24 OF 46 DWG NO. G-C-100A

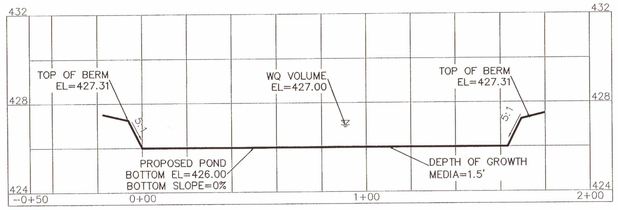

PROFILE – RAIN GARDEN 1

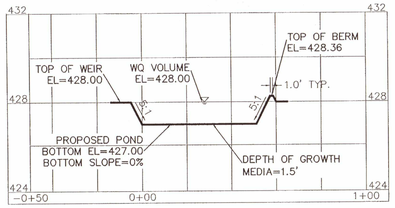

PROFILE – RAIN GARDEN 2

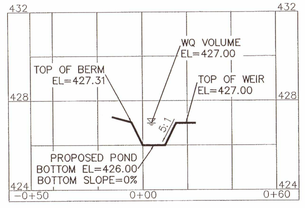

SECTION A–A

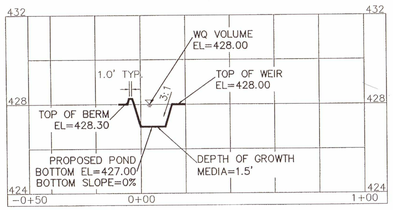

PROFILE – RAIN GARDEN 3

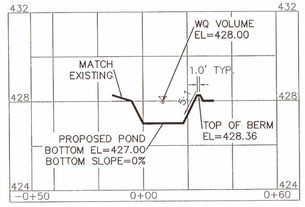

SECTION B–B

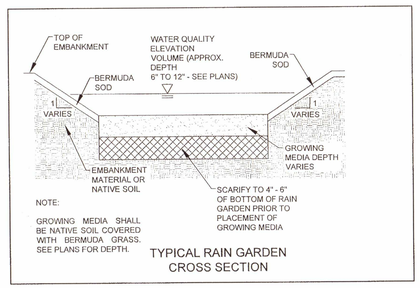

TYPICAL RAIN GARDEN
CROSS SECTION

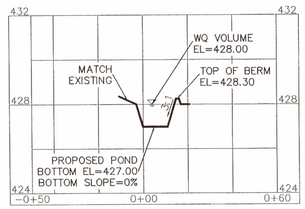

SECTION C–C

NOTE:
1. ALL GUTTERS AND DOWNSPOUTS ON PROPOSED SUBSTATION 1 TO DIRECTED TO RAIN GARDEN 1.
2. RAIN GARDEN VEGETATION SHALL CONSIST OF BERMUDA GRASS.
3. DISCHARGE VELOCITY FROM RAIN GARDEN SHALL NOT EXCEED 2.0 FPS FOR 100-YEAR FLOW.
4. GROWING MEDIUM SHALL BE IN SITU SOIL.
5. RAIN GARDENS IN THIS PROJECT ARE DESIGNED FOR FULL INFILTRATION.
6. OWNER MUST ADHERE TO MAINTENANCE PLAN AND INTEGRATED PEST MANAGEMENT PLAN.

ID	AREA	% IC	C02	C05	C10	C25	C100	Tc	I02	I05	I10	I25	I100	Q2	Q5	Q10	Q25	Q100
RG1	0.37	69	0.58	0.62	0.65	0.70	0.78	5	5.76	7.39	8.57	10.1	12.5	1.24	1.69	2.06	2.61	3.61
RG2	0.27	69	0.58	0.62	0.65	0.70	0.78	5	5.76	7.39	8.57	10.1	12.5	0.91	1.23	1.50	1.90	2.64
RG3	0.05	80	0.64	0.68	0.71	0.76	0.85	5	5.76	7.39	8.57	10.1	12.5	0.18	0.25	0.31	0.38	0.53
RO	1.18	0	0.21	0.21	0.25	0.29	0.36	5	5.76	7.39	8.57	10.1	12.5	1.43	1.83	2.53	3.46	5.31

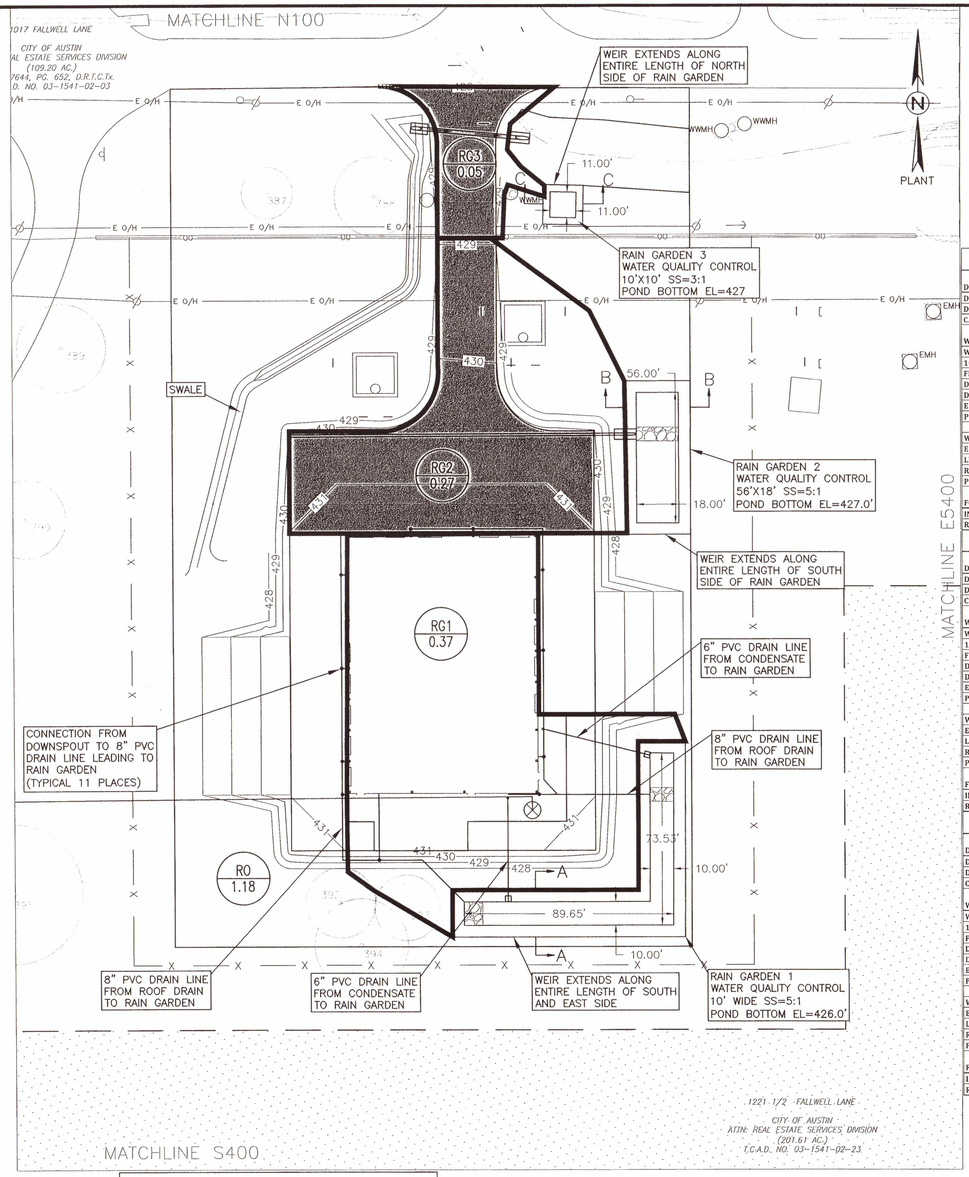

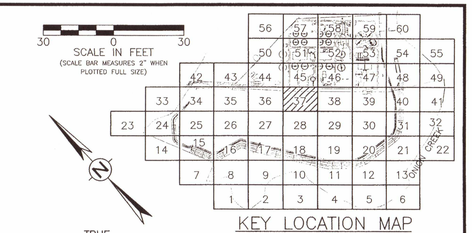

APPENDIX R-11 - RAIN GARDEN CALCULATIONS FOR DEVELOPMENT PERMITS
DRAINAGE AREA RG1

DRAINAGE AREA DATA		
DRAINAGE AREA TO CONTROL (DA)	0.37 ac	
DRAINAGE AREA PERCENT IMPERVIOUS COVER (IC)	69 %	
CAPTURE DEPTH (CD)	0.99 in	
WATER QUALITY CONTROL CALCULATIONS	**Required**	**Provided**
WATER QUALITY VOLUME	1340 cf	2949 cf
100 YEAR PEAK FLOW RATE TO CONTROL (Q100)	3.6 cfs	
FILTRATION POND AREA (Af)	857 sf	1532 sf
DEPTH OF PONDING (D)	MAX 1.0 ft	1.00 ft
DEPTH OF FILTRATION MEDIA (L)	MIN 1.5 ft	1.5 ft
EFFECTIVE POROSITY WATER QUALITY VOLUME (WQVac=0.24*Af*L)		552 cf
PONDED WATER QUALITY VOLUME (WQVponded=WQV-WQVac)		2398 cf
	Total WQV	2949 cf
WATER QUALITY ELEVATION (WQE)		427.00 ft MSL
ELEVATION OF SPLITTER/OVERFLOW WEIR (Minimum WQE)		427.00 ft MSL
LENGTH OF SPLITTER WEIR		99.6 ft
REQUIRED HEAD TO PASS Q100	MAX 0.5 ft	0.06 ft
POND FREEBOARD PROVIDED TO PASS Q100	MIN 0.25 ft	0.25 ft
FOR INFILTRATION RAIN GARDENS		
INFILTRATION RATE (IN/HR)		0.57 in/hr
RAIN GARDEN POND DRAWDOWN TIME		21.1 hr

APPENDIX R-11 - RAIN GARDEN CALCULATIONS FOR DEVELOPMENT PERMITS
DRAINAGE AREA RG2

DRAINAGE AREA DATA		
DRAINAGE AREA TO CONTROL (DA)	0.27 ac	
DRAINAGE AREA PERCENT IMPERVIOUS COVER (IC)	69 %	
CAPTURE DEPTH (CD)	0.99 in	
WATER QUALITY CONTROL CALCULATIONS	**Required**	**Provided**
WATER QUALITY VOLUME	966 cf	1791 cf
100 YEAR PEAK FLOW RATE TO CONTROL (Q100)	2.6 cfs	
FILTRATION POND AREA (Af)	610 sf	1008 sf
DEPTH OF PONDING (D)	MAX 1.0 ft	1.00 ft
DEPTH OF FILTRATION MEDIA (L)	MIN 1.5 ft	1.5 ft
EFFECTIVE POROSITY WATER QUALITY VOLUME (WQVac=0.24*Af*L)		363 cf
PONDED WATER QUALITY VOLUME (WQVponded=WQV-WQVac)		1428 cf
	Total WQV	1791 cf
WATER QUALITY ELEVATION (WQE)		428.00 ft MSL
ELEVATION OF SPLITTER/OVERFLOW WEIR (Minimum WQE)		428.00 ft MSL
LENGTH OF SPLITTER WEIR		28 ft
REQUIRED HEAD TO PASS Q100	MAX 0.5 ft	0.11 ft
POND FREEBOARD PROVIDED TO PASS Q100	MIN 0.25 ft	0.25 ft
FOR INFILTRATION RAIN GARDENS		
INFILTRATION RATE (IN/HR)		0.57 in/hr
RAIN GARDEN POND DRAWDOWN TIME		21.1 hr

APPENDIX R-11 - RAIN GARDEN CALCULATIONS FOR DEVELOPMENT PERMITS
DRAINAGE AREA RG3

DRAINAGE AREA DATA		
DRAINAGE AREA TO CONTROL (DA)	0.05 ac	
DRAINAGE AREA PERCENT IMPERVIOUS COVER (IC)	80 %	
CAPTURE DEPTH (CD)	1.10 in	
WATER QUALITY CONTROL CALCULATIONS	**Required**	**Provided**
WATER QUALITY VOLUME	217 cf	222 cf
100 YEAR PEAK FLOW RATE TO CONTROL (Q100)	0.5 cfs	
FILTRATION POND AREA (Af)	139 sf	121 sf
DEPTH OF PONDING (D)	MAX 1.0 ft	1.00 ft
DEPTH OF FILTRATION MEDIA (L)	MIN 1.5 ft	1.5 ft
EFFECTIVE POROSITY WATER QUALITY VOLUME (WQVac=0.24*Af*L)		44 cf
PONDED WATER QUALITY VOLUME (WQVponded=WQV-WQVac)		178 cf
	Total WQV	222 cf
WATER QUALITY ELEVATION (WQE)		427.00 ft MSL
ELEVATION OF SPLITTER/OVERFLOW WEIR (Minimum WQE)		427.00 ft MSL
LENGTH OF SPLITTER WEIR		16 ft
REQUIRED HEAD TO PASS Q100	MAX 0.5 ft	0.05 ft
POND FREEBOARD PROVIDED TO PASS Q100	MIN 0.25 ft	0.25 ft
FOR INFILTRATION RAIN GARDENS		
INFILTRATION RATE (IN/HR)		0.57 in/hr
RAIN GARDEN POND DRAWDOWN TIME		21.1 hr

LEGEND
- LIMITS OF CONSTRUCTION
- EXISTING TREE TO REMAIN
- OUTSIDE LIMITS OF CONSTRUCTION
- RAIN GARDEN CONTRIBUTING AREA
- PROPOSED CONTOURS

SITE PLAN APPROVAL SHEET 25 OF 46
FILE NUMBER: SP-2018-0189C APPLICATION DATE: 04/26/2018
APPROVED BY COMMISSION ON UNDER SECTION 112
OF CHAPTER 25-5 OF THE CITY OF AUSTIN CODE.
EXPIRATION DATE(25-5-81, LDC) 7/5/19
CASE MANAGER CHRISTINE BARTON-HOLMES
PROJECT EXPIRATION DATE (ORD. #970905-A) _____
DMPZ DPZ
DIRECTOR, DEVELOPMENT SERVICES DEPARTMENT
RELEASED FOR GENERAL COMPLIANCE: 7/5/19 ZONING P
Rev. 1 _____ Correction 1 _____
Rev. 2 _____ Correction 2 _____
Rev. 3 _____ Correction 3 _____
Final Plat must be recorded by the Project Expiration Date, if applicable. Subsequent Site Plans which do not comply with the Code current at the time of filing, and all required Building Permits and/or a notice of construction (if a building permit is not required), must also be approved prior to the Project Expiration Date.

BAR LENGTH ON ORIGINAL DRAWING EQUALS ONE INCH, ADJUST SCALE ACCORDINGLY.

CAS CONSULTING & SERVICES, INC.
CIVIL ENGINEERING | PROGRAM MANAGEMENT | CONSTRUCTION MANAGEMENT
7908 Cameron Road | Austin, TX 78754 |REG. NO. F-0[illegible]572
Main: 512.836.2388 | Fax: 512.836.4015

STATE OF TEXAS
ANDREW W. ROONE
66364
LICENSED
PROFESSIONAL ENGINEER
5/28/2019

NO.	DATE:	DESCRIPTION

HARUTUNIAN ENGINEERING INCORPORATED
TEXAS FIRM REGISTRATION NUMBER F-2408
ENGINEERING AND ENVIRONMENTAL CONSULTANTS
305 EAST HUNTLAND DRIVE SUITE 500
AUSTIN, TEXAS 78752

REUSE OF DOCUMENTS
This document, and the designs incorporated herein, is an instrument of professional service that has been developed, designed and prepared by Harutunian Engineering, Inc., and is not to be used, in whole or in part, for any other project without giving written notice to Harutunian Engineering, Inc.

DESIGNED BY:	CAS
CHECKED BY:	LR
APPROVED BY:	AMR
SUBMITTAL DATE:	MAY 2019
SCALE:	

SOUTH AUSTIN REGIONAL WASTEWATER TREATMENT PLANT
ELECTRICAL SUBSTATION NO. 1 REPLACEMENT PROJECT
CIP I.D.# 3333.032

WATER QUALITY CONTROL PLAN

PROJECT NO: 2014-300 | SHT. 25 OF 46 | DWG NO. G-C-137A

Development Services Department
JUL 10 2019

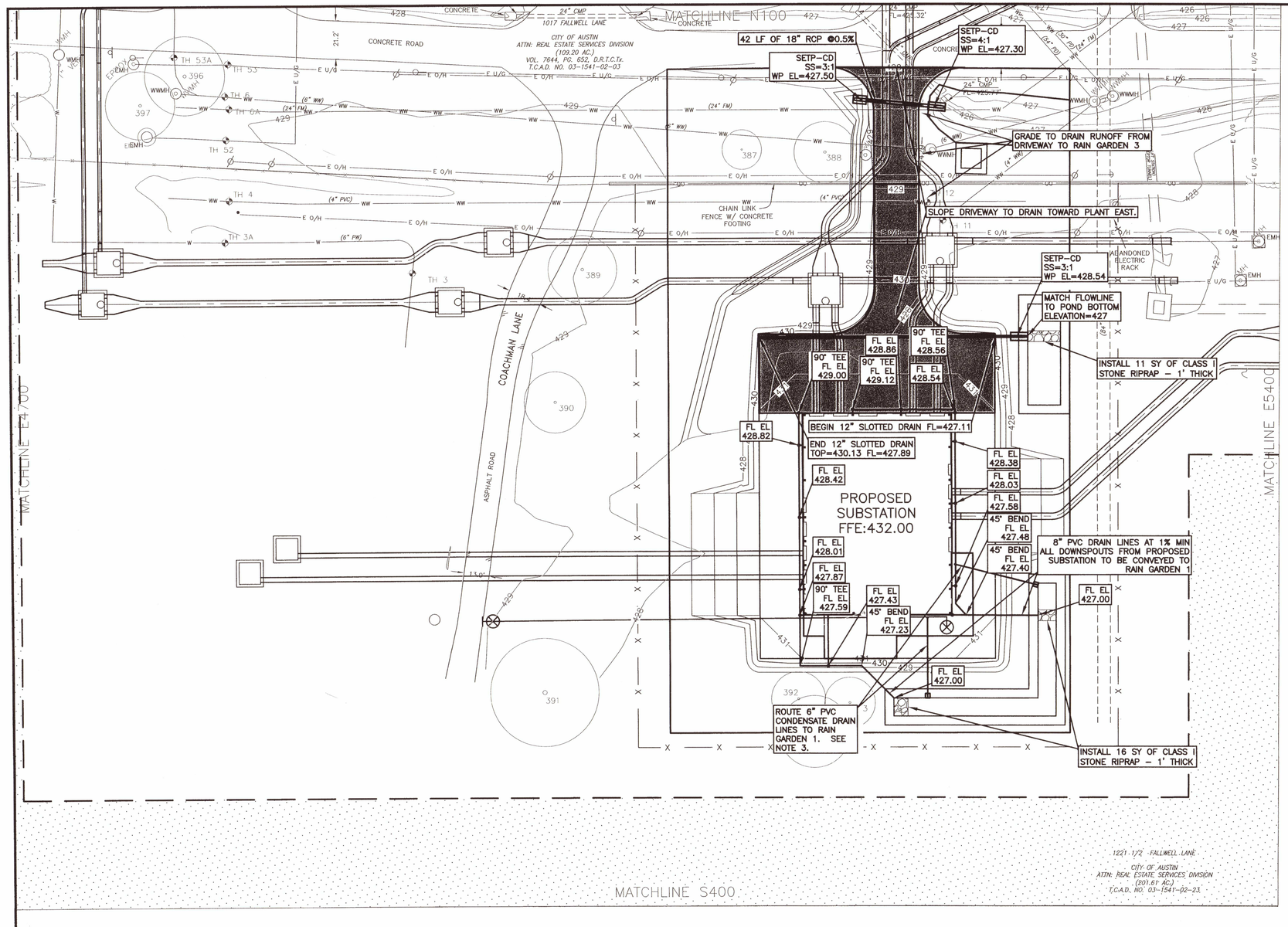

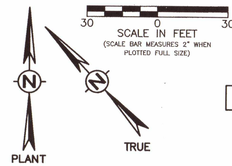

SCALE IN FEET
(SCALE BAR MEASURES 2" WHEN PLOTTED FULL SIZE)
30 0 30

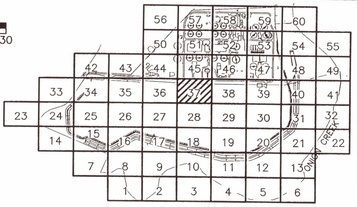

KEY LOCATION MAP
NTS

LEGEND

- LIMITS OF CONSTRUCTION
- EXISTING TREE TO REMAIN
- OUTSIDE LIMITS OF CONSTRUCTION
- DIRECTION OF FLOW
- PROPOSED CONTOURS
- PROPOSED PAVEMENT

NOTE:
1. SEE TXDOT SD FOR SLOTTED DRAIN
2. WP=WORKING POINT= SOFFIT OF PIPE
3. INSTALL 6" RISER PIPE WITH FRAME AND 6" GRATED DRAIN INLET AT CONDENSATE OUTLETS NEXT TO BUILDING. GRATE SHALL BE NEENAH R-4380-3 OR APPROVED EQUIVALENT. 6" CONDENSATE DRAIN LINES SHALL BE SEPARATE FROM 8" ROOF DRAIN LINES AND SHALL BE ROUTED TO RAIN GARDEN 1. PROVIDE 2.5'X2.5'X4"THICK CONCRETE RIPRAP AT OUTFALL.
4. INSTALL CLEANOUTS AT TEES ON 8" DRAIN LINES.

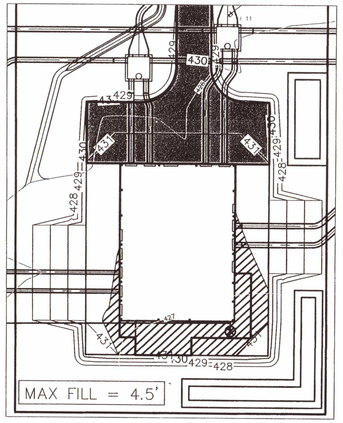

FILL FROM 4' TO 4.5': 3,960 SF

SITE PLAN APPROVAL SHEET 26 OF 46
FILE NUMBER: SP-2018-0189C APPLICATION DATE: 04/26/2018
APPROVED BY COMMISSION ON _____ UNDER SECTION 112
OF CHAPTER 25-5 OF THE CITY OF AUSTIN CODE.
EXPIRATION DATE(25-5-81, LDC) 7/3/19
CASE MANAGER CHRISTINE BARTON-HOLMES
PROJECT EXPIRATION DATE (ORD. #970905-A) _____
DWPZ DDZ
DIRECTOR, DEVELOPMENT SERVICES DEPARTMENT
RELEASED FOR GENERAL COMPLIANCE: 7/3/19 ZONING P
Rev. 1 _____ Correction 1 _____
Rev. 2 _____ Correction 2 _____
Rev. 3 _____ Correction 3 _____
Final Plat must be recorded by the Project Expiration Date, if applicable. Subsequent Site Plans which do not comply with the Code current at the time of filing, and all required Building Permits and/or a notice of construction (if a building permit is not required), must also be approved prior to the Project Expiration Date.

Development Services Department
JUL 10 2019

BAR LENGTH ON ORIGINAL DRAWING EQUALS ONE INCH, ADJUST SCALE ACCORDINGLY.

CAS CONSULTING & SERVICES, INC. CONSTRUCTION MANAGEMENT
CIVIL ENGINEERING | PROGRAM MANAGEMENT | CONSTRUCTION M^2
7908 Cameron Road | Austin, TX 78754 | REG. NO. F-0035
Main: 512.836.2388 | Fax: 512.836.4515

STATE OF TEXAS
ANDREW W. ROOKE
66364
LICENSED
PROFESSIONAL ENGINEER
5/28/2019

NO.	DATE:	DESCRIPTION

HARUTUNIAN ENGINEERING INCORPORATED
TEXAS FIRM REGISTRATION NUMBER F-2408
ENGINEERING AND ENVIRONMENTAL CONSULTANTS
305 EAST HUNTLAND DRIVE SUITE 500
AUSTIN, TEXAS 78752

REUSE OF DOCUMENTS
This document, and the designs incorporated herein, is an instrument of professional service that has been developed, designed and prepared by Harutunian Engineering, Inc., and is not to be used, in whole or in part, for any other project without giving written notice to Harutunian Engineering, Inc.

DESIGNED BY:	CAS
CHECKED BY:	LR
APPROVED BY:	AMR
SUBMITTAL DATE:	MAY 2019
SCALE:	

SOUTH AUSTIN REGIONAL WASTEWATER TREATMENT PLANT
ELECTRICAL SUBSTATION NO. 1 REPLACEMENT PROJECT
CIP I.D.# 3333.032

GRADING AND DRAINAGE

PROJECT NO: 2014-300 SHT. 26 OF 46 DWG NO. S-C-100A

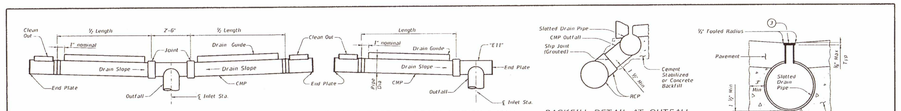

TYPICAL TYPE "T" DRAIN INSTALLATION

TYPICAL TYPE "L" DRAIN INSTALLATION

BACKFILL DETAIL AT OUTFALL

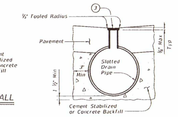

TYPICAL BACKFILL DETAIL

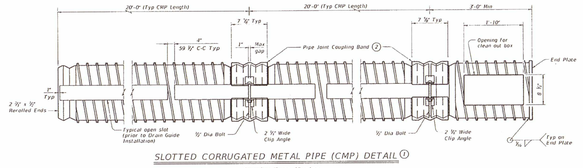

SLOTTED CORRUGATED METAL PIPE (CMP) DETAIL 1

Showing Type IR pipe

1. Provide 16 gauge (Min) x 12" to 36" Dia Corrugated Metal Pipe (Type I – 2 ⅔" x ½" corrugations or Type IR – ⅔" x ½" x 7 ½" corrugations).
2. Alternate methods of joining lengths of pipe, as recommended by the manufacturer, may be used with the approval of the Engineer.
3. Wood Strip (Nom ¾" Max x 2 ½") Wood strip may be omitted if suitable protection is provided during pavement placement.
4. Install frame and grate flush with pavement and centered over clean out box.
5. See pavement details for slab thickness.

FABRICATION NOTES:

Provide circular corrugated steel pipe, galvanized or aluminized, in accordance with Item 460, "Corrugated Metal Pipe".
Fabricate slotted drain pipe by transforming to Item 471, "Linear Drains".
Fabricate bearing bars, cross bar spacers, and plates, and chain out boxes from ¾" plate, ASTM A36. Galvanize in accordance with Item 445, "Galvanizing".
Furnish slotted drain in 20'-0" lengths, when practical, to minimize number of joints.
Furnish pedestrian cap when specified in the plans.

INSTALLATION NOTES:

Backfill trenches for slotted drains and outfall pipe with low strength concrete (minimum 2 sacks or cement per cubic yard) or cement stabilized backfill as shown or directed by the Engineer.
Use only non-compressible material in the outfall connection slip joint, to retain grout during curing.
Provide heavy duty frame and grate from one of the following, or approved equal (clear opening 22" x 8 ½" Min, 75 ½" x 12 Max):
Neenah R-3371
E & J 3371
USF 3623 Frame and 6296 grate

GENERAL NOTES:

Unless otherwise shown on the plans, the Contractor may furnish any of the designs as shown.
Frame and grate is subsidiary to Slotted Drain.

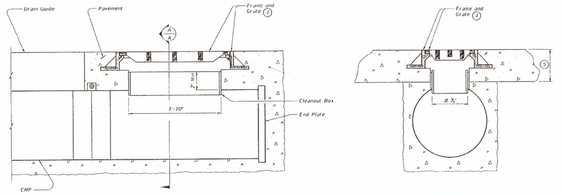

CLEAN OUT BOX ELEVATION

SECTION A-A

SHEET 1 OF 2

Texas Department of Transportation — Bridge Division Standard

ROADWAY LINEAR DRAIN (SLOTTED DRAIN)

SD

FILE	sdxxxxdet.dgn	DN: TxDOT	CK: TxDOT	DW: DKC	CK: KES
©TxDOT May 2019	REVISIONS	CONT	SECT	JOB	HIGHWAY
		DIST	COUNTY		SHEET NO.

DISCLAIMER: The use of this standard is governed by the "Texas Engineering Practice Act". No liability of any kind is assumed by the Texas Department of Transportation for any modification of this standard, or the use of this standard on any project not developed in connection with the Texas Department of Transportation.

DATE ISSUED

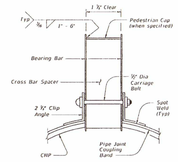

PIPE JOINT CONNECTION TRANSVERSE SECTION

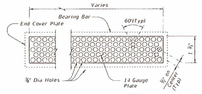

PEDESTRIAN CAP DETAIL

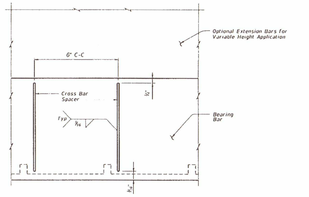

SECTION B-B (WITH RECTANGULAR SPACERS)

Showing Installation of Cross Bar Spacers in Longitudinal Section

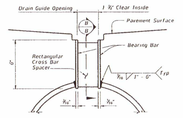

STANDARD HEIGHT

Showing Rectangular Spacers

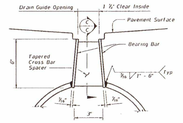

STANDARD HEIGHT

Showing Tapered Spacers

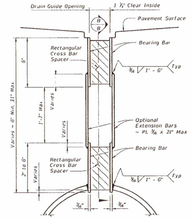

VARIABLE HEIGHT

Showing Rectangular Spacers and Extension

TYPICAL SECTIONS THRU DRAIN GUIDE INSTALLATION

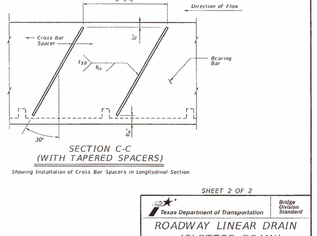

SECTION C-C (WITH TAPERED SPACERS)

Showing Installation of Cross Bar Spacers in Longitudinal Section

SHEET 2 OF 2

Texas Department of Transportation — Bridge Division Standard

ROADWAY LINEAR DRAIN (SLOTTED DRAIN)

SD

FILE	sdxxxxdet.dgn	DN: TxDOT	CK: TxDOT	DW: DKC	CK: KES
©TxDOT May 2019	REVISIONS	CONT	SECT	JOB	HIGHWAY
		DIST	COUNTY		SHEET NO.

DISCLAIMER: The use of this standard is governed by the "Texas Engineering Practice Act". No liability of any kind is assumed by the Texas Department of Transportation for any modification of this standard, or the use of this standard on any project not developed in connection with the Texas Department of Transportation.

DATE ISSUED

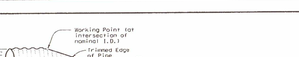

NOTE: All Pipe Runners, calculations, and dimensions are based on the pipe culverts altered as shown in this detail. Adjustments in types of mitered ends will require that appropriate adjustments be made to the values presented on this standard.

SIDE ELEVATION OF TYPICAL PIPE CULVERT MITER

(Showing Corrugated Metal Pipe Culvert. Details of Concrete Pipe Culvert are similar.)

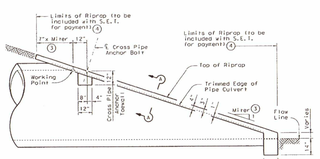

SIDE ELEVATION OF CAST-IN-PLACE CONCRETE

(Showing Concrete Pipe Culvert. Details of Corrugated Metal Pipe Culvert are similar, Pipe Runners not shown for clarity)

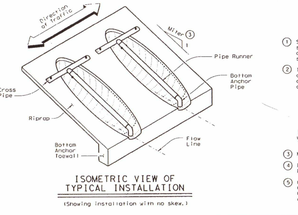

ISOMETRIC VIEW OF TYPICAL INSTALLATION

(Showing Installation with no Skew.)

CROSS PIPE LENGTHS & PIPE RUNNER LENGTHS 1 2

Nominal Culvert I.D.	Pipe Culvert Spa - G	Cross Pipe Length	Pipe Runner Length 3:1 Side Slope 0° Skew	3:1 Side Slope 15° Skew	3:1 Side Slope 30° Skew	3:1 Side Slope 45° Skew	4:1 Side Slope 0° Skew	4:1 Side Slope 15° Skew	4:1 Side Slope 30° Skew	4:1 Side Slope 45° Skew	6:1 Side Slope 0° Skew	6:1 Side Slope 15° Skew	6:1 Side Slope 30° Skew	6:1 Side Slope 45° Skew
24"	1'-7"	3'-1"	5'-5"	N/A	N/A	N/A	5'-10"	N/A	N/A	N/A	8'-1"	N/A	N/A	N/A	12'-9"
27"	1'-8"	3'-1"	5'-8"	N/A	N/A	N/A	5'-5"	6'-11"	N/A	N/A	N/A	7'-7"	9'-7"	N/A	N/A	11'-11"	14'-11"
30"	1'-10"	3'-1"	6'-0"	N/A	N/A	6'-4"	8'-0"	N/A	N/A	N/A	8'-9"	11'-0"	N/A	N/A	13'-8"	17'-0"
33"	1'-11"	4'-2"	6'-3"	6'-5"	7'-3"	9'-1"	8'-6"	8'-10"	10'-0"	12'-5"	13'-3"	13'-9"	15'-5"	19'-2"
36"	2'-1"	4'-5"	6'-11"	7'-3"	8'-2"	10'-2"	9'-6"	9'-11"	11'-2"	13'-10"	14'-9"	15'-3"	17'-2"	21'-3"
42"	2'-4"	4'-11"	8'-4"	8'-10"	9'-11"	12'-4"	11'-7"	12'-0"	13'-6"	16'-8"	17'-9"	18'-5"	20'-8"	25'-7"
48"	2'-7"	5'-5"	10'-1"	10'-5"	11'-9"	N/A	13'-7"	14'-2"	15'-10"	N/A	20'-9"	21'-6"	24'-2"	N/A
54"	3'-0"	5'-11"	11'-8"	12'-1"	N/A	N/A	15'-8"	16'-3"	N/A	N/A	23'-10"	24'-8"	N/A	N/A
60"	3'-3"	6'-5"	13'-3"	N/A	N/A	N/A	17'-9"	N/A	N/A	N/A	26'-10"	N/A	N/A	N/A

TYPICAL PIPE CULVERT MITERS 3

Side Slope	0° Skew	15° Skew	30° Skew	45° Skew
3:1	3:1	3.106±1	3.464±1	4.243±1
4:1	4:1	4.141±1	4.619±1	5.657±1
6:1	6:1	6.212±1	6.928±1	8.485±1

CONDITIONS WHERE PIPE RUNNERS ARE NOT REQUIRED 2

Nominal Culvert I.D.	Single Pipe Culvert	Multiple Pipe Culverts
12" thru 21"	Skews thru 45°	Skews thru 45°
24"	Skews thru 45°	Skews thru 30°
27"	Skews thru 30°	Skews thru 15°
30"	Skews thru 15°	Skews thru 15°
33"	Skews thru 15°	Always required
36"	Normal to Skew	Always required
42" to 60"	Always required	Always required

STANDARD PIPE SIZES & MAX PIPE RUNNER LENGTHS 1

Pipe Size	Pipe O.D.	Pipe I.D.	Max Pipe Runner Length
2" STD	2.375"	2.067"	N/A
3" STD	3.500"	3.068"	10'-0"
4" STD	4.500"	4.026"	19'-8"
5" STD	5.563"	5.047"	34'-2"

ESTIMATED CONCRETE RIPRAP QUANTITIES (CY) 5

Nominal Culvert I.D.	3:1 Side Slope 0° Skew	3:1 Side Slope 15° Skew	3:1 Side Slope 30° Skew	3:1 Side Slope 45° Skew	4:1 Side Slope 0° Skew	4:1 Side Slope 15° Skew	4:1 Side Slope 30° Skew	4:1 Side Slope 45° Skew	6:1 Side Slope 0° Skew	6:1 Side Slope 15° Skew	6:1 Side Slope 30° Skew	6:1 Side Slope 45° Skew
12"	0.4	0.4	0.5	0.5	0.5	0.5	0.5	0.6	0.7	0.7	0.7	0.8
15"	0.5	0.5	0.5	0.6	0.6	0.6	0.6	0.7	0.7	0.7	0.8	0.9
18"	0.5	0.5	0.6	0.6	0.6	0.7	0.7	0.8	0.8	0.8	0.9	1.0
21"	0.6	0.6	0.6	0.7	0.7	0.7	0.8	0.9	0.9	0.9	1.0	1.2
24"	0.6	0.7	0.7	0.8	0.8	0.8	0.8	1.0	1.0	1.0	1.1	1.3
27"	0.7	0.7	0.8	0.9	0.8	0.9	0.9	1.1	1.1	1.1	1.2	1.4
30"	0.8	0.8	0.8	0.9	0.9	0.9	1.0	1.2	1.2	1.2	1.3	1.6
33"	0.8	0.8	0.9	1.0	1.0	1.0	1.1	1.3	1.3	1.4	1.5	1.7
36"	0.9	0.9	0.9	1.1	1.1	1.1	1.2	1.4	1.4	1.5	1.6	1.8
42"	1.0	1.0	1.1	1.3	1.2	1.3	1.3	1.6	1.6	1.7	1.8	2.1
48"	1.1	1.1	1.2	N/A	1.4	1.4	1.5	N/A	1.9	1.9	2.1	N/A
54"	1.3	1.3	N/A	N/A	1.6	1.6	N/A	N/A	2.1	2.1	N/A	N/A
60"	1.4	N/A	N/A	N/A	1.7	N/A	N/A	N/A	2.3	N/A	N/A	N/A

1. Size of Pipe Runner shall be as shown in the tables. Cross Pipe and Pipe Runner shall be the same size. Pipe Runner Stub Out and Bottom Anchor Pipe shall be the next smaller size pipe as shown in the STANDARD PIPE SIZES table.
2. This standard allows for the placement of only one pipe runner across the cross pipe culvert opening. In order for a pipe runner opening to be traversed by an errant vehicle, the following conditions must be met:
   - for 60" culvert pipes, the skew must not exceed 0°.
   - for 54" culvert pipes, the skew must not exceed 15°.
   - for 48" culvert pipes, the skew must not exceed 30°.
   - for all culvert pipe sizes 42" and less, the skew must not exceed 45°.

   If the above conditions cannot be met, the designer should consider using a safety end treatment with flared wings. For further information, refer to the TxDOT "Roadway Design Manual".
3. Miter = Slope of Mitered Pipe Culvert End
4. Riprap placed beyond the limits shown will be paid as Concrete Riprap in accordance with Item 432, "Riprap".
5. Quantities shown are for one end of one reinforced Concrete Pipe Culvert. For non-flared ends, or for Corrugated Metal Pipe Culverts, quantities will need to be adjusted. Riprap quantities are for Contractor's information only.

SHEET 1 OF 2

Texas Department of Transportation — Bridge Division Standard

SAFETY END TREATMENT FOR 12" DIA TO 60" DIA PIPE CULVERTS TYPE II – CROSS DRAINAGE

SETP-CD

FILE	sdsetpcd.dgn	DN: TxDOT	CK:	DW:	CK:
©TxDOT February 2001	REVISIONS	CONT	SECT	JOB	HIGHWAY
12-01 Revised to AASHTO Standards		DIST	COUNTY		SHEET NO.

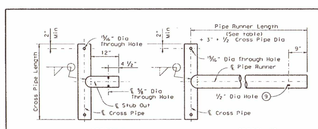

CROSS PIPE AND CONNECTIONS DETAILS

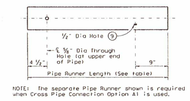

NOTE: The separate Pipe Runner shown is required when Cross Pipe Connection Option A1 is used.

PIPE RUNNER DETAILS

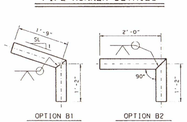

BOTTOM ANCHOR PIPE DETAILS 10

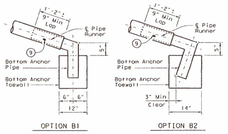

BOTTOM ANCHOR TOEWALL DETAILS

(Culvert & Riprap not shown for clarity)

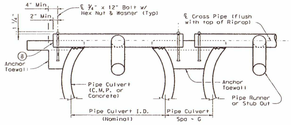

SHOWING CROSS PIPE & ANCHOR TOEWALL

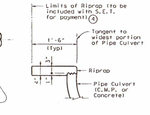

SHOWING TYPICAL PIPE CULVERT & RIPRAP

SECTION A-A

4 Riprap placed beyond the limits shown will be paid as Concrete Riprap in accordance with Item 432, "Riprap".

6 Recommended values of side slope are 3:1, 4:1, & 6:1. All quantities, calculations, and dimensions shown herein are based on these recommended values. Slope of 3:1 or flatter is required for vehicle safety.

7 Note that actual slope of Pipe Runner may vary slightly from Side Slope of Riprap and trimmed Culvert Pipe edge.

8 Care shall be taken to ensure that Riprap concrete does not flow into the Cross Pipe so as to permit disassembly of the bolted connection to allow cleanout access.

9 After installation, the ½" hole shall be inspected to ensure that the top of the Pipe Runner with the Bottom Anchor Pipe is adequate.

10 At fabricator's option, a heat bend to a smooth 5° radius or a manufactured elbow (of the same material as the Runner) may be substituted for the mitered and welded joint in the Bottom Anchor Pipe.

GENERAL NOTES:

Pipe Runners are designed for a traversing load of 1,800 pounds at yield as recommended by Research Report 280-1, "Safety Treatment of Roadside Cross-Drainage Structures", Texas Transportation Institute, March 1981. Pipe Runners are not recommended for installations in high speed inspirations where out of control vehicles are likely to traverse the openings approximately perpendicular to the Pipe Runners.
Riprap and all necessary inverts shall be Concrete Riprap conforming to the requirements of Item 432, "Riprap".
Class "C" or "H" "Class Designations for Concrete" Material Producer List (MPL) may be used in lieu of steel reinforcing in riprap concrete unless noted otherwise.
Payment for riprap and toewall is included in the Price Bid for each Safety End Treatment.
Pipe Culvert, Pipe Runners, and Anchor Pipes shall conform to the requirements of ASTM A53 (Type E or S, Grade B), ASTM A500 (Grade B), or API 5L#52.
Bolts and nuts shall conform to ASTM A307.
All steel components, except concrete reinforcing, shall be galvanized after fabrication. Galvanizing damaged during transport or construction shall be repaired in accordance with the specifications.

SHEET 2 OF 2

Texas Department of Transportation — Bridge Division Standard

SAFETY END TREATMENT FOR 12" DIA TO 60" DIA PIPE CULVERTS TYPE II – CROSS DRAINAGE

SETP-CD

FILE	sdsetpcd.dgn	DN: TxDOT	CK:	DW:	CK:
©TxDOT February 2001	REVISIONS	CONT	SECT	JOB	HIGHWAY
12-01 Revised to AASHTO Standards		DIST	COUNTY		SHEET NO.

SITE PLAN APPROVAL SHEET 27 OF 46
FILE NUMBER: SP-2018-0189C APPLICATION DATE: 04/26/2018
APPROVED BY COMMISSION ON _____ UNDER SECTION 112
OF CHAPTER 25-5 OF THE CITY OF AUSTIN CODE.
EXPIRATION DATE(25-5-81, LDC) 7/3/2020
CASE MANAGER CHRISTINE BARTON-HOLMES
PROJECT EXPIRATION DATE (ORD. #970905-A) _____
DMP2 _____ DDA _____
DIRECTOR, DEVELOPMENT SERVICES DEPARTMENT
RELEASED FOR GENERAL COMPLIANCE: 7/3/19 ZONING P
Rev. 1 _____ Correction 1 _____
Rev. 2 _____ Correction 2 _____
Rev. 3 _____ Correction 3 _____
Final Plat must be recorded by the Project Expiration Date, if applicable. Subsequent Site Plans which do not comply with the Code current at the time of filing, and all required Building Permits and/or a notice of construction (if a building permit is not required), must also be approved prior to the Project Expiration Date.

Development Services Department
JUL 10 2019

BAR LENGTH ON ORIGINAL DRAWING EQUALS ONE INCH, ADJUST SCALE ACCORDINGLY.

CAS CONSULTING & SERVICES, INC.
CIVIL ENGINEERING | PROGRAM MANAGEMENT | CONSTRUCTION MANAGEMENT
7908 Cameron Road | Austin, TX 78754 | REG. NO. F-003
Main: 512.836.2388 | Fax: 512.836.4515

STATE OF TEXAS — ANDREW W. ROSKI — 86364 — LICENSED PROFESSIONAL ENGINEER
5/28/2019

NO.	DATE:	DESCRIPTION

HARUTUNIAN ENGINEERING INCORPORATED
TEXAS FIRM REGISTRATION NUMBER F-2408
ENGINEERING AND ENVIRONMENTAL CONSULTANTS
305 EAST HUNTLAND DRIVE SUITE 500
AUSTIN, TEXAS 78752

REUSE OF DOCUMENTS

This document, and the designs incorporated herein, is an instrument of professional service that has been developed, designed and prepared by Harutunian Engineering, Inc., and is not to be used, in whole or in part, for any other project without giving written notice to Harutunian Engineering, Inc.

DESIGNED BY: CAS
CHECKED BY: LR
APPROVED BY: AMR
SUBMITTAL DATE: MAY 2019
SCALE:

SOUTH AUSTIN REGIONAL WASTEWATER TREATMENT PLANT
ELECTRICAL SUBSTATION NO. 1 REPLACEMENT PROJECT
CIP I.D.# 3333.032

DRAINAGE DETAILS

PROJECT NO: 2014-300 SHT. 27 OF 46 DWG NO. TD-C-008A

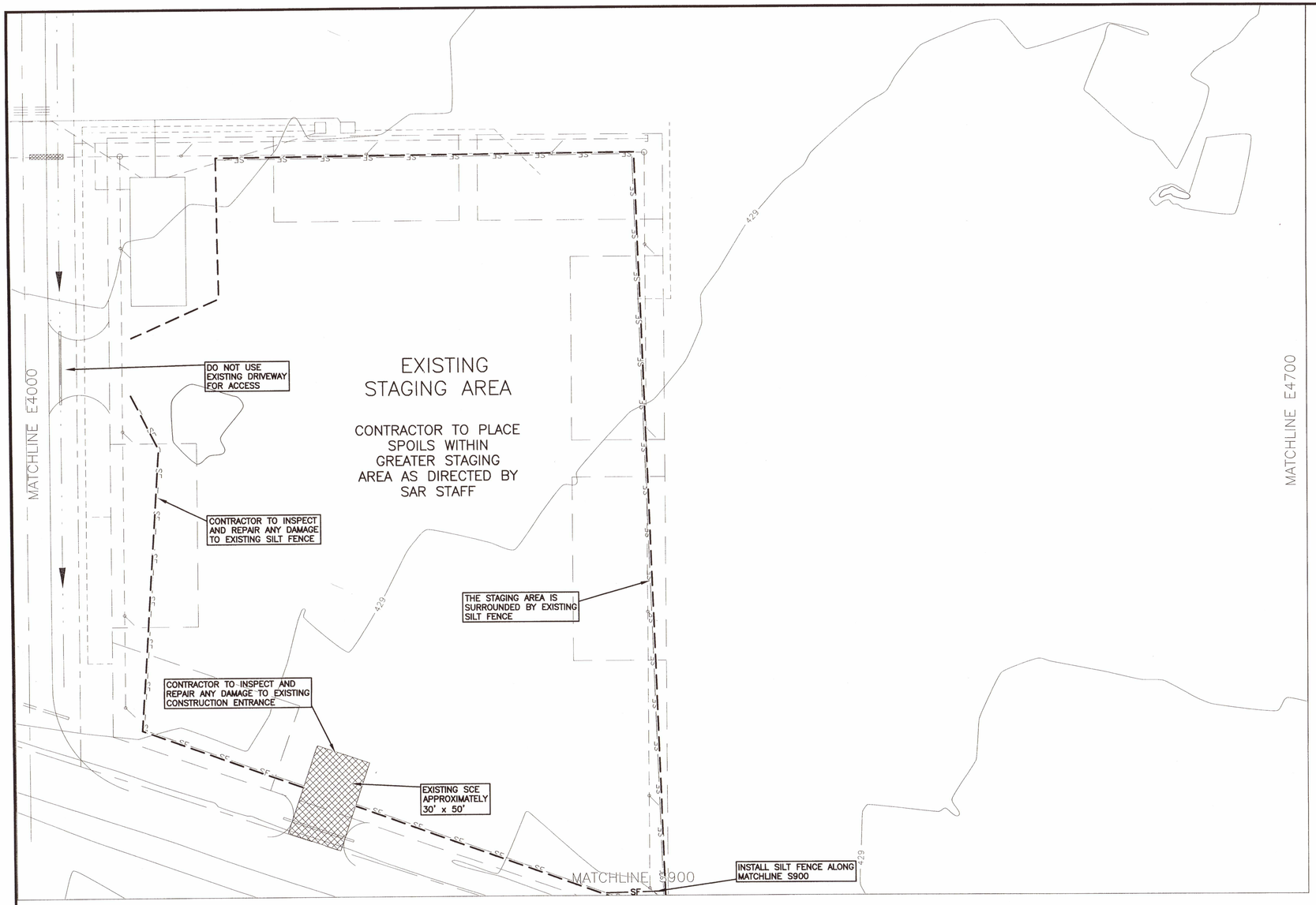

NO TREES REMOVED

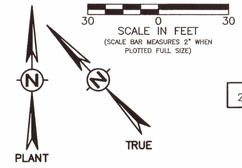

30 0 30
SCALE IN FEET
(SCALE BAR MEASURES 2" WHEN PLOTTED FULL SIZE)

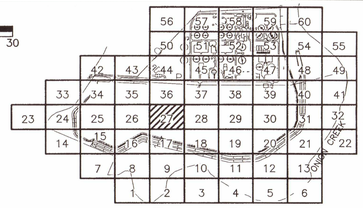

KEY LOCATION MAP
NTS

LEGEND

- LIMITS OF CONSTRUCTION
- SF SILT FENCE FOR EROSION CONTROL
- OUTSIDE LIMITS OF CONSTRUCTION
- EXISTING STABILIZED CONSTRUCTION ENTRANCE (SCE)

NOTE:
1. IF DISTURBED AREA IS NOT TO BE WORKED ON FOR MORE THAN 14 DAYS, DISTURBED AREA NEEDS TO BE STABILIZED BY REVEGETATION, MULCH, TARP OR REVEGETATION MATTING. [ECM 1.4.4.B.3, SECTION 5, I.]
2. ENVIRONMENTAL INSPECTOR HAS THE AUTHORITY TO ADD AND/OR MODIFY EROSION/SEDIMENTATION CONTROLS ON SITE TO KEEP PROJECT IN-COMPLIANCE WITH THE CITY OF AUSTIN RULES AND REGULATIONS. [LDC 25-8-183]
3. CONTRACTOR SHALL UTILIZE DUST CONTROL MEASURES DURING SITE CONSTRUCTION SUCH AS IRRIGATION TRUCKS AND MULCHING AS PER ECM 1.4.5(A), OR AS DIRECTED B THE ENVIRONMENTAL INSPECTOR.
4. THE CONTRACTOR WILL CLEAN UP SPOILS THAT MIGRATE ONTO THE ROADS A MINIMUM OF ONCE DAILY. [ECM 1.4.4.D.4]

SITE PLAN APPROVAL SHEET 28 OF 46
FILE NUMBER: SP-2018-0189C APPLICATION DATE: 04/26/2018
APPROVED BY COMMISSION ON ____ UNDER SECTION 112
OF CHAPTER 25-5 OF THE CITY OF AUSTIN CODE.
EXPIRATION DATE(25-5-81, LDC) 2/3/22
CASE MANAGER CHRISTINE BARTON-HOLMES
PROJECT EXPIRATION DATE (ORD. #970905-A) ____
DMPZ ____ DDZ ____

DIRECTOR, DEVELOPMENT SERVICES DEPARTMENT
RELEASED FOR GENERAL COMPLIANCE: 7/2/19 ZONING P
Rev. 1 ____ Correction 1 ____
Rev. 2 ____ Correction 2 ____
Rev. 3 ____ Correction 3 ____
Final Plat must be recorded by the Project Expiration Date, if applicable. Subsequent Site Plans which do not comply with the Code current at the time of filing, and all required Building Permits and/or a notice of construction (if a building permit is not required), must also be approved prior to the Project Expiration Date.

Development Services Department
JUL 10 2019

BAR LENGTH ON ORIGINAL DRAWING EQUALS ONE INCH, ADJUST SCALE ACCORDINGLY.

CAS CONSULTING & SERVICES, INC.
CIVIL ENGINEERING | PROGRAM MANAGEMENT | CONSTRUCTION M/I/S
7908 Cameron Road | Austin, TX 78754 |REG. NO. F-0035
Main: 512.836.2388 | Fax: 512.836.4515

STATE OF TEXAS
ANDREW M. ROOKE
66364
LICENSED
PROFESSIONAL ENGINEER
5/28/2019

NO.	DATE:	DESCRIPTION

HARUTUNIAN ENGINEERING INCORPORATED
TEXAS FIRM REGISTRATION NUMBER F-2408
ENGINEERING AND ENVIRONMENTAL CONSULTANTS
305 EAST HUNTLAND DRIVE SUITE 500
AUSTIN, TEXAS 78752

REUSE OF DOCUMENTS
This document, and the designs incorporated herein, is an instrument of professional service that has been developed, designed and prepared by Harutunian Engineering, Inc., and is not to be used, in whole or in part, for any other project without giving written notice to Harutunian Engineering, Inc.

DESIGNED BY:	CAS
CHECKED BY:	LR
APPROVED BY:	AMR
SUBMITTAL DATE:	MAY 2019
SCALE:	

SOUTH AUSTIN REGIONAL WASTEWATER TREATMENT PLANT
ELECTRICAL SUBSTATION NO. 1 REPLACEMENT PROJECT
CIP I.D.# 3333.032

EROSION CONTROL SHEET 1

PROJECT NO: 2014-300 | SHT. 28 OF 46 | DWG NO. A-C-027A

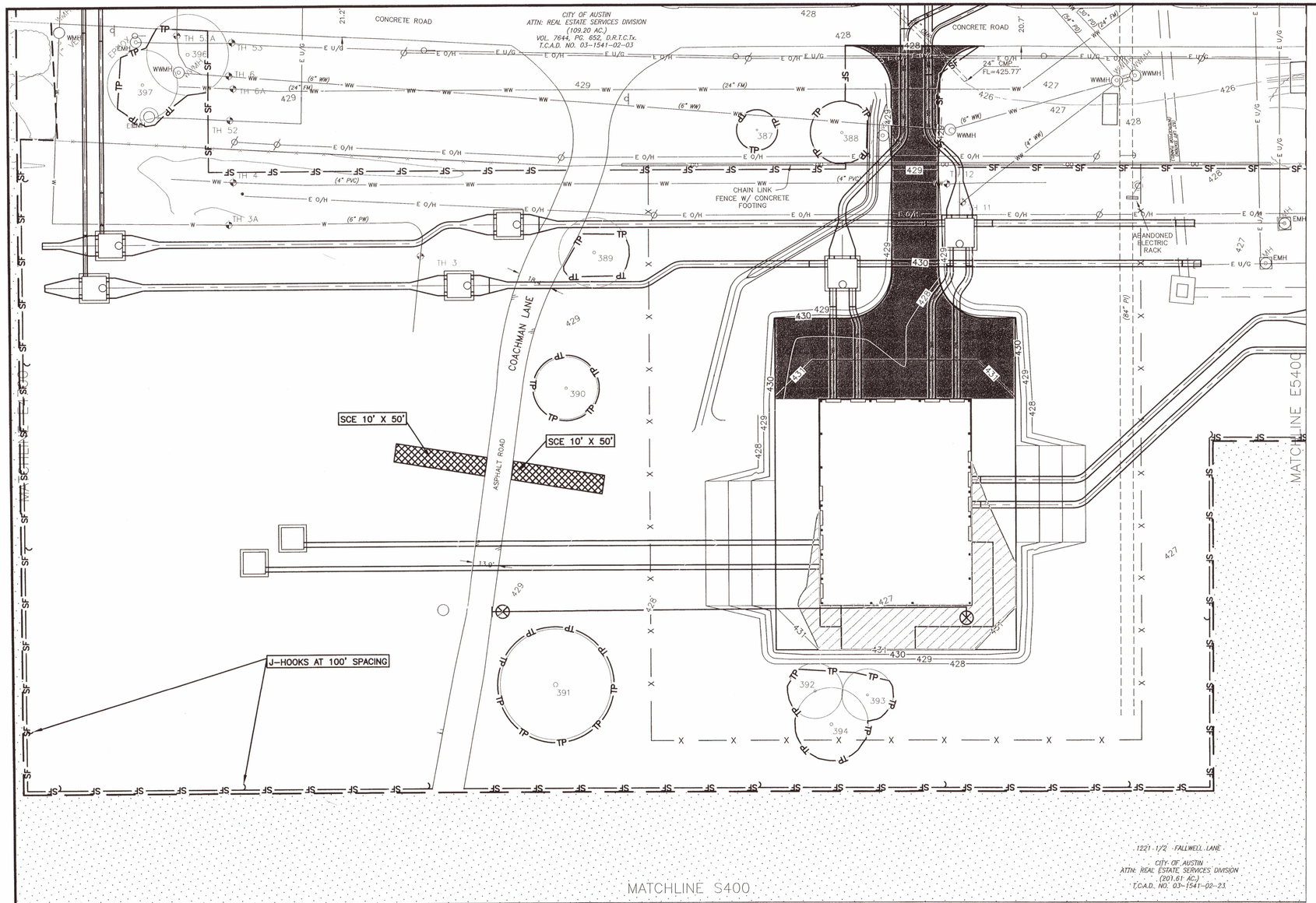

NO TREES REMOVED

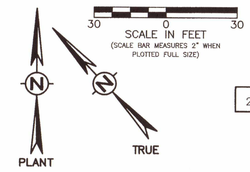

SCALE IN FEET
30 0 30
(SCALE BAR MEASURES 2" WHEN PLOTTED FULL SIZE)

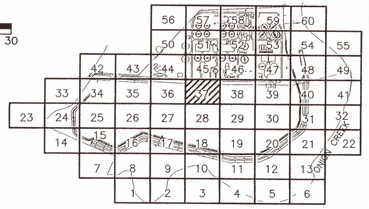

KEY LOCATION MAP
NTS

LEGEND

- LIMITS OF CONSTRUCTION
- SF — SILT FENCE FOR EROSION CONTROL
- TP — TREE PROTECTION
- ROCK BERM
- EXISTING TREE TO REMAIN
- OUTSIDE LIMITS OF CONSTRUCTION
- STABILIZED CONSTRUCTION ENTRANCE (SCE)
- DIRECTION OF FLOW

TREE LIST

387 – 11" LIVE OAK
388 – 17" LIVE OAK
389 – 19" HACKBERRY (6" 8" 12")
390 – 17" HACKBERRY
391 – 30" ARIZONA ASH
392 – 15" HACKBERRY
393 – 14" HACKBERRY
394 – 20" HACKBERRY
396 – 22" LIVE OAK
397 – 19" LIVE OAK

TREE SURVEY SEALED 09–14–2017

NOTE:

1. IF DISTURBED AREA IS NOT TO BE WORKED ON FOR MORE THAN 14 DAYS, DISTURBED AREA NEEDS TO BE STABILIZED BY REVEGETATION, MULCH, TARP OR REVEGETATION MATTING. [ECM 1.4.4.B.3, SECTION 5, I.]
2. ENVIRONMENTAL INSPECTOR HAS THE AUTHORITY TO ADD AND/OR MODIFY EROSION/SEDIMENTATION CONTROLS ON SITE TO KEEP PROJECT IN-COMPLIANCE WITH THE CITY OF AUSTIN RULES AND REGULATIONS. [LDC 25-8-183]
3. CONTRACTOR SHALL UTILIZE DUST CONTROL MEASURES DURING SITE CONSTRUCTION SUCH AS IRRIGATION TRUCKS AND MULCHING AS PER ECM 1.4.5(A), OR AS DIRECTED B THE ENVIRONMENTAL INSPECTOR.
4. THE CONTRACTOR WILL CLEAN UP SPOILS THAT MIGRATE ONTO THE ROADS A MINIMUM OF ONCE DAILY. [ECM 1.4.4.D.4]

Development Services Department
SEP 10 2019

SITE PLAN APPROVAL SHEET 29 OF 46
FILE NUMBER: SP-2018-0189C APPLICATION DATE: 04/26/2018
APPROVED BY COMMISSION ON _____ UNDER SECTION 112
OF CHAPTER 25-5 OF THE CITY OF AUSTIN CODE.
EXPIRATION DATE(25-5-81, LDC) 7/3/22
CASE MANAGER CHRISTINE BARTON-HOLMES
PROJECT EXPIRATION DATE (ORD. 970905-A) _____
DWPZ DZ
DIRECTOR, DEVELOPMENT SERVICES DEPARTMENT
RELEASED FOR GENERAL COMPLIANCE: 7/3/19 ZONING P
Rev. 1 _____ Correction 1 _____
Rev. 2 _____ Correction 2 _____
Rev. 3 _____ Correction 3 _____
Final Plat must be recorded by the Project Expiration Date, if applicable. Subsequent Site Plans which do not comply with the Code current at the time of filing, and all required Building Permits and/or a notice of construction (if a building permit is not required), must also be approved prior to the Project Expiration Date.

BAR LENGTH ON ORIGINAL DRAWING EQUALS ONE INCH, ADJUST SCALE ACCORDINGLY.

CAS CONSULTING & SERVICES, INC.
CIVIL ENGINEERING | PROGRAM MANAGEMENT | CONSTRUCTION MANAGEMENT
7908 Cameron Road | Austin, TX 78754 | REG NO. F-003572
Main: 512.836.2388 | Fax: 512.836.4515

STATE OF TEXAS
ANDREW M. ROORK
66364
LICENSED
PROFESSIONAL ENGINEER
5/28/2019

NO.	DATE:	DESCRIPTION

HARUTUNIAN ENGINEERING INCORPORATED
TEXAS FIRM REGISTRATION NUMBER F-2408
ENGINEERING AND ENVIRONMENTAL CONSULTANTS
305 EAST HUNTLAND DRIVE SUITE 500
AUSTIN, TEXAS 78752

REUSE OF DOCUMENTS
This document, and the designs incorporated herein, is an instrument of professional service that has been developed, designed and prepared by Harutunian Engineering, Inc., and is not to be used, in whole or in part, for any other project without giving written notice to Harutunian Engineering, Inc.

DESIGNED BY:	CAS
CHECKED BY:	LR
APPROVED BY:	AMR
SUBMITTAL DATE:	MAY 2019
SCALE:	

SOUTH AUSTIN REGIONAL WASTEWATER TREATMENT PLANT
ELECTRICAL SUBSTATION NO. 1 REPLACEMENT PROJECT
CIP I.D.# 3333.032

EROSION CONTROL SHEET 2

PROJECT NO: 2014-300 SHT. 29 OF 46 DWG NO. A-C-037A

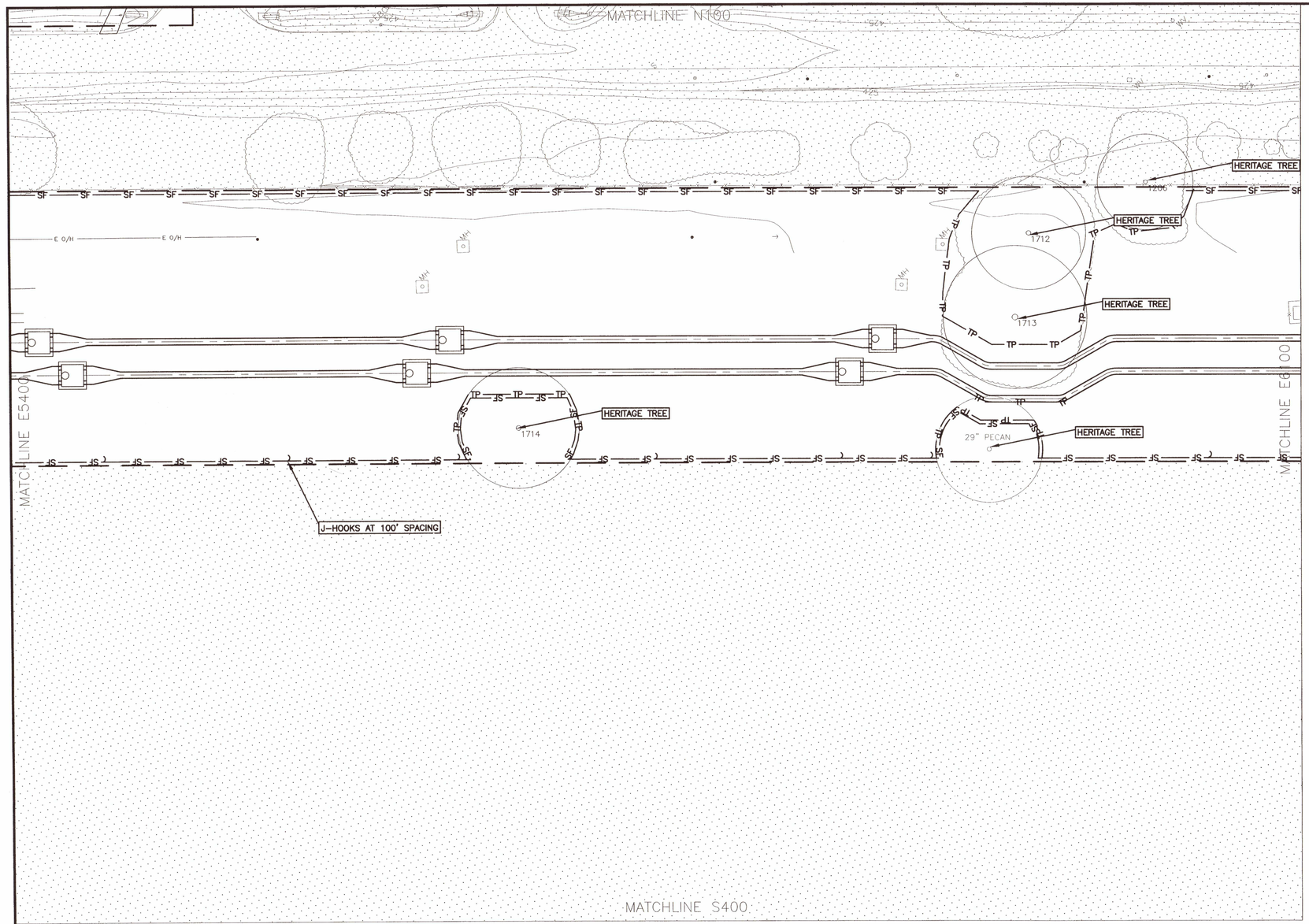

NO TREES REMOVED

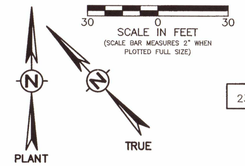

SCALE IN FEET
(SCALE BAR MEASURES 2" WHEN PLOTTED FULL SIZE)
30 0 30

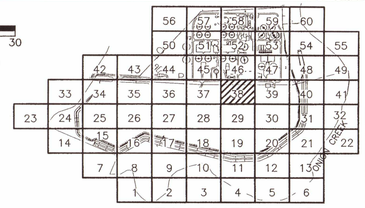

KEY LOCATION MAP
NTS

LEGEND

- LIMITS OF CONSTRUCTION
- SF — SILT FENCE FOR EROSION CONTROL
- TP — TREE PROTECTION
- ROCK BERM
- EXISTING TREE TO REMAIN
- OUTSIDE LIMITS OF CONSTRUCTION
- STABILIZED CONSTRUCTION ENTRANCE (SCE)
- DIRECTION OF FLOW

TREE LIST

1206 – 26" PECAN
1712 – 31" PECAN
1713 – 26", 31" PECAN
1714 – 33" PECAN
NOTAG – 29" PECAN

TREE SURVEY SEALED 09–14–2017

NOTE:

1. IF DISTURBED AREA IS NOT TO BE WORKED ON FOR MORE THAN 14 DAYS, DISTURBED AREA NEEDS TO BE STABILIZED BY REVEGETATION, MULCH, TARP OR REVEGETATION MATTING. [ECM 1.4.4.B.3, SECTION 5, I.]
2. ENVIRONMENTAL INSPECTOR HAS THE AUTHORITY TO ADD AND/OR MODIFY EROSION/SEDIMENTATION CONTROLS ON SITE TO KEEP PROJECT IN–COMPLIANCE WITH THE CITY OF AUSTIN RULES AND REGULATIONS. [LDC 25–8–183]
3. CONTRACTOR SHALL UTILIZE DUST CONTROL MEASURES DURING SITE CONSTRUCTION SUCH AS IRRIGATION TRUCKS AND MULCHING AS PER ECM 1.4.5(A), OR AS DIRECTED B THE ENVIRONMENTAL INSPECTOR.
4. THE CONTRACTOR WILL CLEAN UP SPOILS THAT MIGRATE ONTO THE ROADS A MINIMUM OF ONCE DAILY. [ECM 1.4.4.D.4]

Development Services Department
FILED

SITE PLAN APPROVAL SHEET 30 OF 46
FILE NUMBER SP-2018-0189C APPLICATION DATE: 04/26/2018
APPROVED BY COMMISSION ON _____ UNDER SECTION 112
OF CHAPTER 25-5 OF THE CITY OF AUSTIN CODE.
EXPIRATION DATE(25-5-81, LDC) 7/3/19
CASE MANAGER CHRISTINE BARTON-HOLMES
PROJECT EXPIRATION DATE (ORD. #970905-A) _____
DWFZ ____ DDZ ____
DIRECTOR, DEVELOPMENT SERVICES DEPARTMENT
RELEASED FOR GENERAL COMPLIANCE 7/3/19 ZONING P
Rev. 1 _____ Correction 1 _____
Rev. 2 _____ Correction 2 _____
Rev. 3 _____ Correction 3 _____
Final Plat must be recorded by the Project Expiration Date, if applicable. Subsequent Site Plans which do not comply with the Code current at the time of filing, and all required Building Permits and/or a notice of construction (if a building permit is not required), must also be approved prior to the Project Expiration Date.

BAR LENGTH ON ORIGINAL DRAWING EQUALS ONE INCH, ADJUST SCALE ACCORDINGLY.

CAS CONSULTING & SERVICES, INC.
CIVIL ENGINEERING | PROGRAM MANAGEMENT | CONSTRUCTION MANAGEMENT
7908 Cameron Road | Austin, TX 78754 |REG. NO. F-0035
Main: 512.836.2388 | Fax: 512.836.4515

STATE OF TEXAS
ANDREW W. ROOKE
66364
LICENSED
PROFESSIONAL ENGINEER
5/28/2019

NO.	DATE:	DESCRIPTION

HARUTUNIAN ENGINEERING INCORPORATED
TEXAS FIRM REGISTRATION NUMBER F–2408
ENGINEERING AND ENVIRONMENTAL CONSULTANTS
305 EAST HUNTLAND DRIVE SUITE 500
AUSTIN, TEXAS 78752

REUSE OF DOCUMENTS
This document, and the designs incorporated herein, is an instrument of professional service that has been developed, designed and prepared by Harutunian Engineering, Inc., and is not to be used, in whole or in part, for any other project without giving written notice to Harutunian Engineering, Inc.

DESIGNED BY:	CAS
CHECKED BY:	LR
APPROVED BY:	AMR
SUBMITTAL DATE:	MAY 2019
SCALE:	

SOUTH AUSTIN REGIONAL WASTEWATER TREATMENT PLANT
ELECTRICAL SUBSTATION NO. 1 REPLACEMENT PROJECT
CIP I.D.# 3333.032

EROSION CONTROL SHEET 3

PROJECT NO: 2014–300 | SHT. 30 OF 46 | DWG NO. A–C–038A

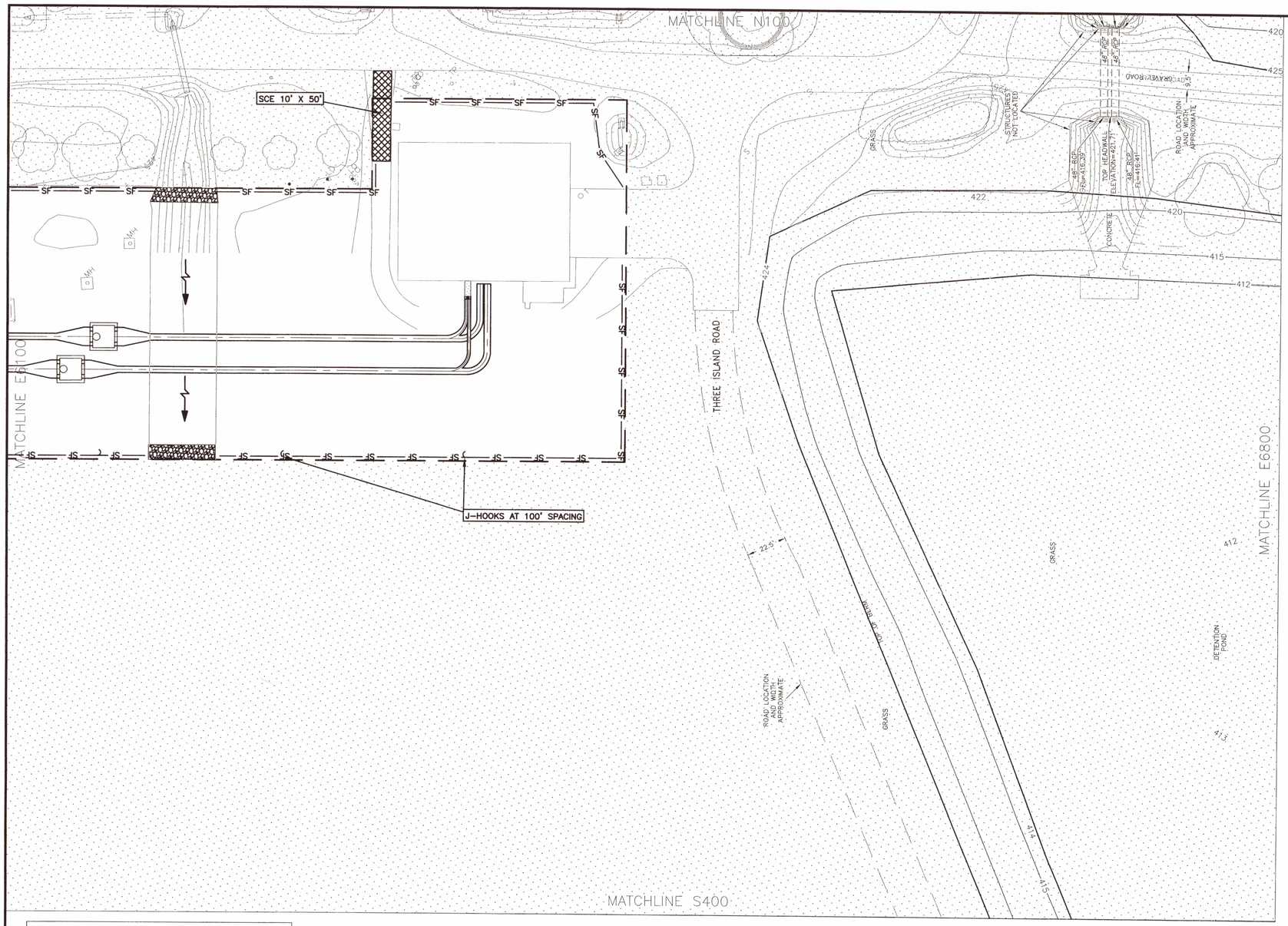

NO TREES REMOVED

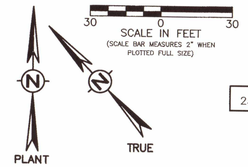

SCALE IN FEET
30 0 30
(SCALE BAR MEASURES 2" WHEN PLOTTED FULL SIZE)

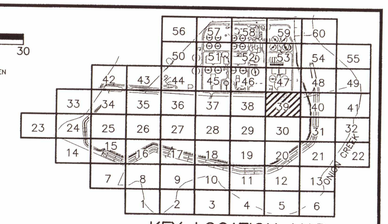

KEY LOCATION MAP
NTS

LEGEND

- LIMITS OF CONSTRUCTION
- SF — SILT FENCE FOR EROSION CONTROL
- TP — TREE PROTECTION
- ROCK BERM
- EXISTING TREE TO REMAIN
- OUTSIDE LIMITS OF CONSTRUCTION
- STABILIZED CONSTRUCTION ENTRANCE (SCE)
- DIRECTION OF FLOW

NOTE:

1. IF DISTURBED AREA IS NOT TO BE WORKED ON FOR MORE THAN 14 DAYS, DISTURBED AREA NEEDS TO BE STABILIZED BY REVEGETATION, MULCH, TARP OR REVEGETATION MATTING. [ECM 1.4.4.B.3, SECTION 5, I.]
2. ENVIRONMENTAL INSPECTOR HAS THE AUTHORITY TO ADD AND/OR MODIFY EROSION/SEDIMENTATION CONTROLS ON SITE TO KEEP PROJECT IN-COMPLIANCE WITH THE CITY OF AUSTIN RULES AND REGULATIONS. [LDC 25-8-183]
3. CONTRACTOR SHALL UTILIZE DUST CONTROL MEASURES DURING SITE CONSTRUCTION SUCH AS IRRIGATION TRUCKS AND MULCHING AS PER ECM 1.4.5(A), OR AS DIRECTED B THE ENVIRONMENTAL INSPECTOR.
4. THE CONTRACTOR WILL CLEAN UP SPOILS THAT MIGRATE ONTO THE ROADS A MINIMUM OF ONCE DAILY. [ECM 1.4.4.D.4]
5. DURING TRENCHING OPERATIONS CONTRACTOR MUST MAINTAIN DRAINAGE PATTERNS

DevelopmentServicesDepartment
JUL 10 2019

SITE PLAN APPROVAL SHEET 31 OF 46
FILE NUMBER: SP-2018-0189C APPLICATION DATE: 04/26/2018
APPROVED BY COMMISSION ON _____ UNDER SECTION 112
OF CHAPTER 25-5 OF THE CITY OF AUSTIN CODE.
EXPIRATION DATE(25-5-81, LDC) 7/31/22
CASE MANAGER CHRISTINE BARTON-HOLMES
PROJECT EXPIRATION DATE (ORD. #970905-A) _____
DMP2 102

DIRECTOR, DEVELOPMENT SERVICES DEPARTMENT
RELEASED FOR GENERAL COMPLIANCE 7/3/19 ZONING P
Rev. 1 _____ Correction 1 _____
Rev. 2 _____ Correction 2 _____
Rev. 3 _____ Correction 3 _____
Final Plat must be recorded by the Project Expiration Date, if applicable. Subsequent Site Plans which do not comply with the Code current at the time of filing, and all required Building Permits and/or a notice of construction (if a building permit is not required), must also be approved prior to the Project Expiration Date.

BAR LENGTH ON ORIGINAL DRAWING EQUALS ONE INCH, ADJUST SCALE ACCORDINGLY.

CAS CONSULTING & SERVICES, INC.
CIVIL ENGINEERING | PROGRAM MANAGEMENT | CONSTRUCTION MANAGEMENT
7908 Cameron Road | Austin, TX 78754 | REG. NO. F-003572
Main: 512.836.2388 | Fax: 51

STATE OF TEXAS
ANDREW M. ROOKE
66364
LICENSED
PROFESSIONAL ENGINEER
5/28/2019

NO.	DATE:	DESCRIPTION

HARUTUNIAN ENGINEERING INCORPORATED
TEXAS FIRM REGISTRATION NUMBER F-2408
ENGINEERING AND ENVIRONMENTAL CONSULTANTS
305 EAST HUNTLAND DRIVE SUITE 500
AUSTIN, TEXAS 78752

REUSE OF DOCUMENTS
This document, and the designs incorporated herein, is an instrument of professional service that has been developed, designed and prepared by Harutunian Engineering, Inc., and is not to be used, in whole or in part, for any other project without giving written notice to Harutunian Engineering, Inc.

DESIGNED BY:	CAS
CHECKED BY:	LR
APPROVED BY:	AMR
SUBMITTAL DATE:	MAY 2019
SCALE:	

SOUTH AUSTIN REGIONAL WASTEWATER TREATMENT PLANT
ELECTRICAL SUBSTATION NO. 1 REPLACEMENT PROJECT
CIP I.D.# 3333.032

EROSION CONTROL SHEET 4

PROJECT NO: 2014-300 SHT. 31 OF 46 DWG NO. A-C-039A

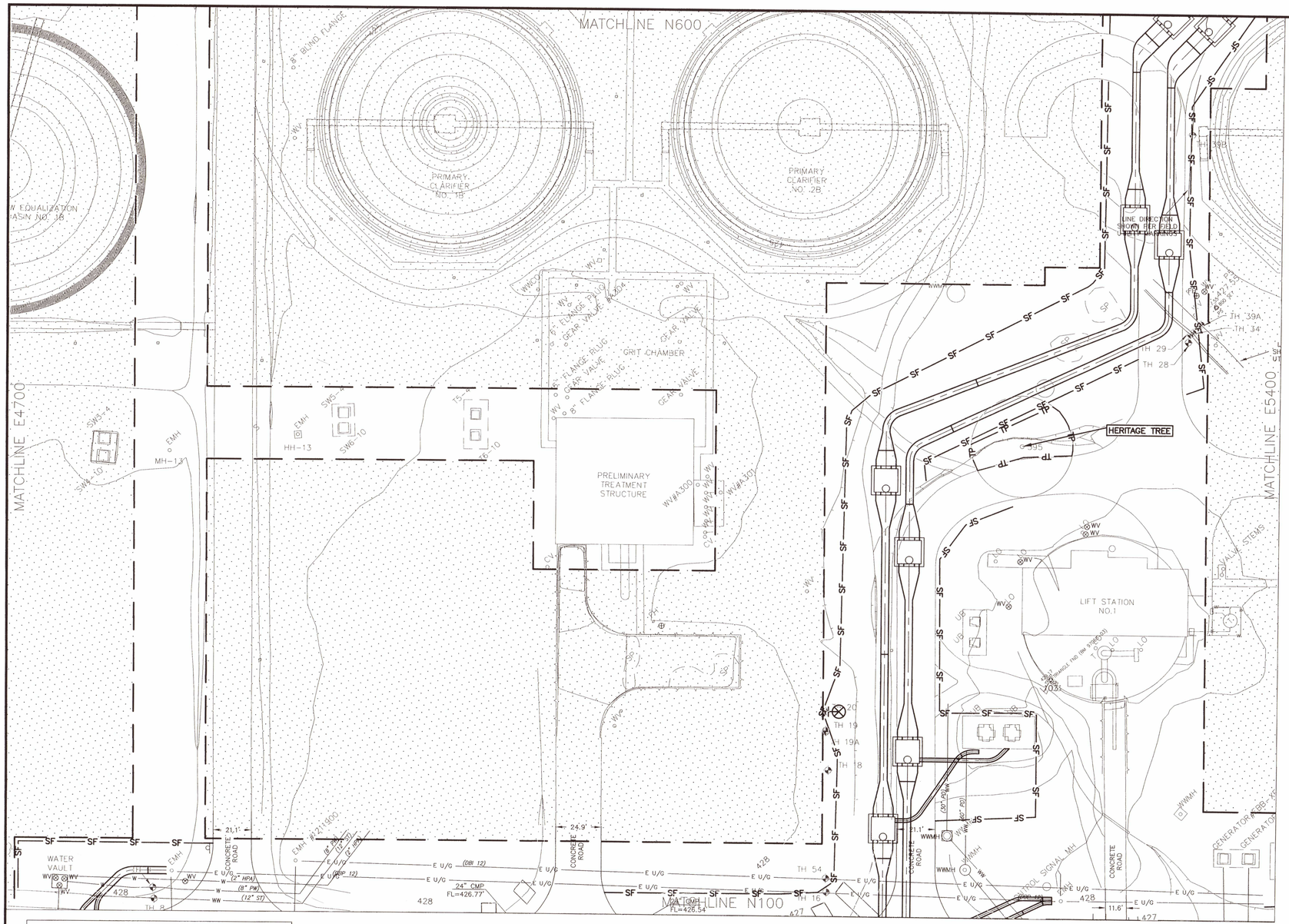

TREE LIST

395 – 28" COTTONWOOD

TREE SURVEY SEALED 09–14–2017

NOTE:

1. IF DISTURBED AREA IS NOT TO BE WORKED ON FOR MORE THAN 14 DAYS, DISTURBED AREA NEEDS TO BE STABILIZED BY REVEGETATION, MULCH, TARP OR REVEGETATION MATTING. [ECM 1.4.4.B.3, SECTION 5, I.]
2. ENVIRONMENTAL INSPECTOR HAS THE AUTHORITY TO ADD AND/OR MODIFY EROSION/SEDIMENTATION CONTROLS ON SITE TO KEEP PROJECT IN–COMPLIANCE WITH THE CITY OF AUSTIN RULES AND REGULATIONS. [LDC 25–8–183]
3. CONTRACTOR SHALL UTILIZE DUST CONTROL MEASURES DURING SITE CONSTRUCTION SUCH AS IRRIGATION TRUCKS AND MULCHING AS PER ECM 1.4.5(A), OR AS DIRECTED B THE ENVIRONMENTAL INSPECTOR.
4. THE CONTRACTOR WILL CLEAN UP SPOILS THAT MIGRATE ONTO THE ROADS A MINIMUM OF ONCE DAILY. [ECM 1.4.4.D.4]

NO TREES REMOVED

Development Services Department
JUL 10 2019

SITE PLAN APPROVAL SHEET 32 OF 46
FILE NUMBER: SP-2018-0189C APPLICATION DATE: 04/26/2018
APPROVED BY COMMISSION ON _____ UNDER SECTION 112
OF CHAPTER 25-5 OF THE CITY OF AUSTIN CODE.
EXPIRATION DATE(25-5-81, LDC) 7/3/20
CASE MANAGER CHRISTINE BARTON-HOLMES
PROJECT EXPIRATION DATE (ORD. #970905-A)
DMP2 102

DIRECTOR, DEVELOPMENT SERVICES DEPARTMENT
RELEASED FOR GENERAL COMPLIANCE 7/3/19 ZONING P
Rev. 1 _____ Correction 1 _____
Rev. 2 _____ Correction 2 _____
Rev. 3 _____ Correction 3 _____
Final Plat must be recorded by the Project Expiration Date, if applicable. Subsequent Site Plans which do not comply with the Code current at the time of filing, and all required Building Permits and/or a notice of construction (if a building permit is not required), must also be approved prior to the Project Expiration Date.

BAR LENGTH ON ORIGINAL DRAWING EQUALS ONE INCH, ADJUST SCALE ACCORDINGLY.

CAS CONSULTING & SERVICES, INC.
CIVIL ENGINEERING | PROGRAM MANAGEMENT | CONSTRUCTION MANAGEMENT
7908 Cameron Road | Austin, TX 78754 |REG. NUS
Main: 512.836.2388 | Fax: 512.836.451

STATE OF TEXAS
ANDREW M. ROOK
68364
LICENSED
PROFESSIONAL ENGINEER
5/28/2019

NO.	DATE:	DESCRIPTION

HARUTUNIAN ENGINEERING INCORPORATED
TEXAS FIRM REGISTRATION NUMBER F–2408
ENGINEERING AND ENVIRONMENTAL CONSULTANTS
305 EAST HUNTLAND DRIVE SUITE 500
AUSTIN, TEXAS 78752

REUSE OF DOCUMENTS
This document, and the designs incorporated herein, is an instrument of professional service that has been developed, designed and prepared by Harutunian Engineering, Inc., and is not to be used, in whole or in part, for any other project without giving written notice to Harutunian Engineering, Inc.

DESIGNED BY:	CAS
CHECKED BY:	LR
APPROVED BY:	AMR
SUBMITTAL DATE:	MAY 2019
SCALE:	

SOUTH AUSTIN REGIONAL WASTEWATER TREATMENT PLANT
ELECTRICAL SUBSTATION NO. 1 REPLACEMENT PROJECT
CIP I.D.# 3333.032

EROSION CONTROL SHEET 5

PROJECT NO: 2014–300 SHT. 32 OF 46 DWG NO. A–C–045A

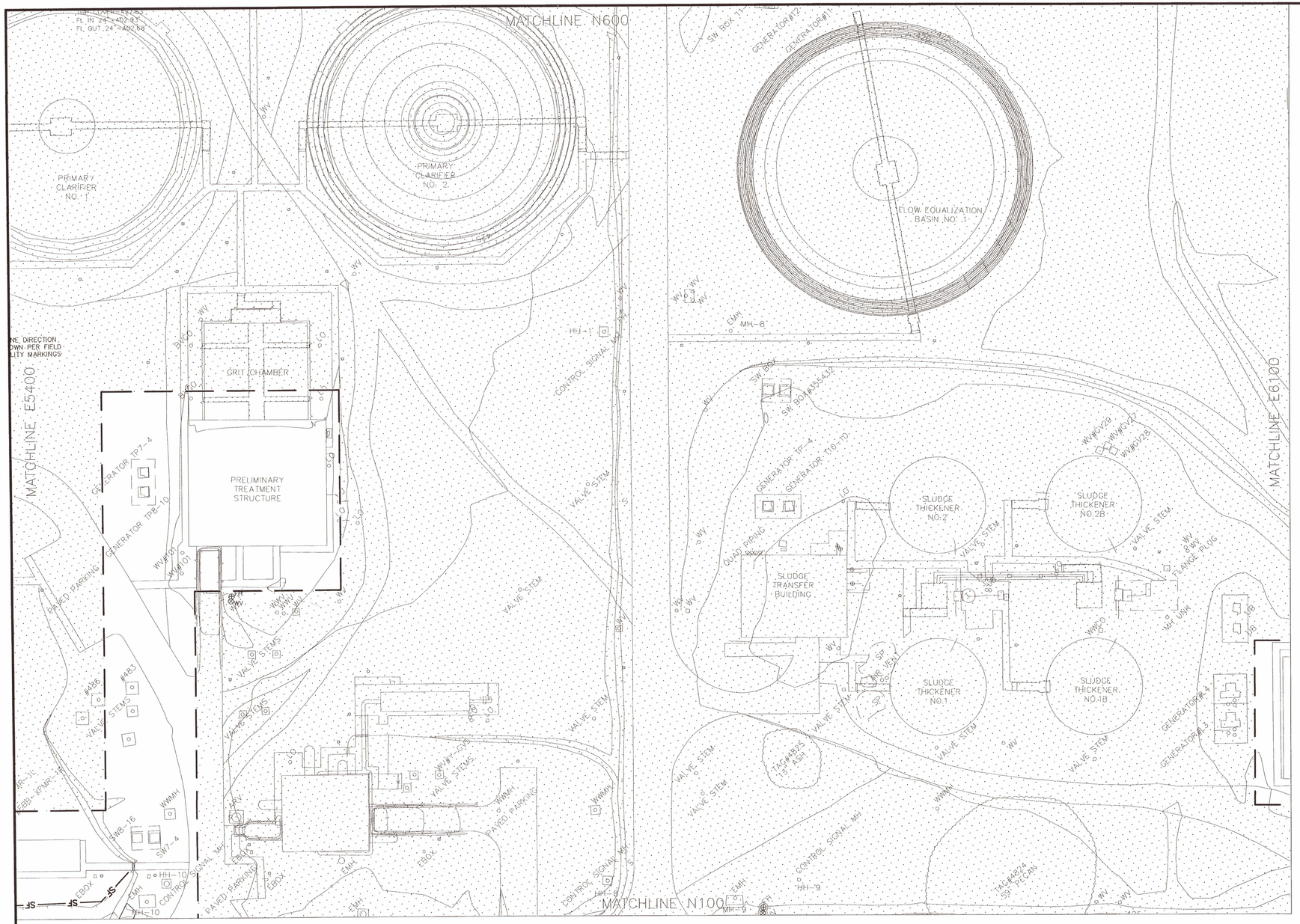

NO TREES REMOVED

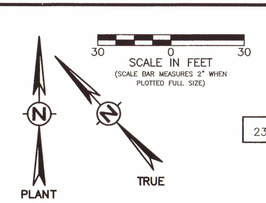

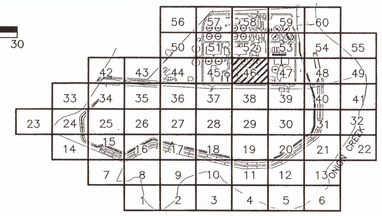

KEY LOCATION MAP
NTS

LEGEND

- LIMITS OF CONSTRUCTION
- SF — SILT FENCE FOR EROSION CONTROL
- TP — TREE PROTECTION
- ROCK BERM
- EXISTING TREE TO REMAIN
- OUTSIDE LIMITS OF CONSTRUCTION
- STABILIZED CONSTRUCTION ENTRANCE (SCE)
- DIRECTION OF FLOW

NOTE:

1. IF DISTURBED AREA IS NOT TO BE WORKED ON FOR MORE THAN 14 DAYS, DISTURBED AREA NEEDS TO BE STABILIZED BY REVEGETATION, MULCH, TARP OR REVEGETATION MATTING. [ECM 1.4.4.B.3, SECTION 5, I.]
2. ENVIRONMENTAL INSPECTOR HAS THE AUTHORITY TO ADD AND/OR MODIFY EROSION/SEDIMENTATION CONTROLS ON SITE TO KEEP PROJECT IN-COMPLIANCE WITH THE CITY OF AUSTIN RULES AND REGULATIONS. [LDC 25-8-183]
3. CONTRACTOR SHALL UTILIZE DUST CONTROL MEASURES DURING SITE CONSTRUCTION SUCH AS IRRIGATION TRUCKS AND MULCHING AS PER ECM 1.4.5(A), OR AS DIRECTED B THE ENVIRONMENTAL INSPECTOR.
4. THE CONTRACTOR WILL CLEAN UP SPOILS THAT MIGRATE ONTO THE ROADS A MINIMUM OF ONCE DAILY. [ECM 1.4.4.D.4]
5. NO E&S REQUIRED FOR IMPROVEMENTS INSIDE BUILDINGS.

Development Services Department
JUL 10 2019

SITE PLAN APPROVAL SHEET 33 OF 46
FILE NUMBER: SP-2018-0189C APPLICATION DATE: 04/26/2018
APPROVED BY COMMISSION ON ____ UNDER SECTION 112
OF CHAPTER 25-5 OF THE CITY OF AUSTIN CODE.
EXPIRATION DATE(25-5-81, LDC) 7/31/22
CASE MANAGER: CHRISTINE BARTON-HOLMES
PROJECT EXPIRATION DATE (ORD. #970905-A) ____
DWPZ ____ DDZ ____
DIRECTOR, DEVELOPMENT SERVICES DEPARTMENT
RELEASED FOR GENERAL COMPLIANCE: 7/31/2019 ZONING P
Rev. 1 ____ Correction 1 ____
Rev. 2 ____ Correction 2 ____
Rev. 3 ____ Correction 3 ____
Final Plat must be recorded by the Project Expiration Date, if applicable. Subsequent Site Plans which do not comply with the Code current at the time of filing, and all required Building Permits and/or a notice of construction (if a building permit is not required), must also be approved prior to the Project Expiration Date.

BAR LENGTH ON ORIGINAL DRAWING EQUALS ONE INCH, ADJUST SCALE ACCORDINGLY.

CAS CONSULTING & SERVICES, INC.
CIVIL ENGINEERING | PROGRAM MANAGEMENT | CONSTRUCTION MANAGEMENT
7908 Cameron Road | Austin, TX 78754 |REG. NO. F-03572
Main: 512.836.2388 | Fax: 512.836.4515

STATE OF TEXAS
ANDREW M. ROORE
66364
LICENSED
PROFESSIONAL ENGINEER
5/28/2019

NO.	DATE:	DESCRIPTION

HARUTUNIAN ENGINEERING INCORPORATED
TEXAS FIRM REGISTRATION NUMBER F-2408
ENGINEERING AND ENVIRONMENTAL CONSULTANTS
305 EAST HUNTLAND DRIVE SUITE 500
AUSTIN, TEXAS 78752

REUSE OF DOCUMENTS
This document, and the designs incorporated herein, is an instrument of professional service that has been developed, designed and prepared by Harutunian Engineering, Inc., and is not to be used, in whole or in part, for any other project without giving written notice to Harutunian Engineering, Inc.

DESIGNED BY:	CAS
CHECKED BY:	LR
APPROVED BY:	AMR
SUBMITTAL DATE:	MAY 2019
SCALE:	

SOUTH AUSTIN REGIONAL WASTEWATER TREATMENT PLANT
ELECTRICAL SUBSTATION NO. 1 REPLACEMENT PROJECT
CIP I.D.# 3333.032

EROSION CONTROL SHEET 6

PROJECT NO: 2014-300 | SHT. 33 OF 46 | DWG NO. A-C-046A

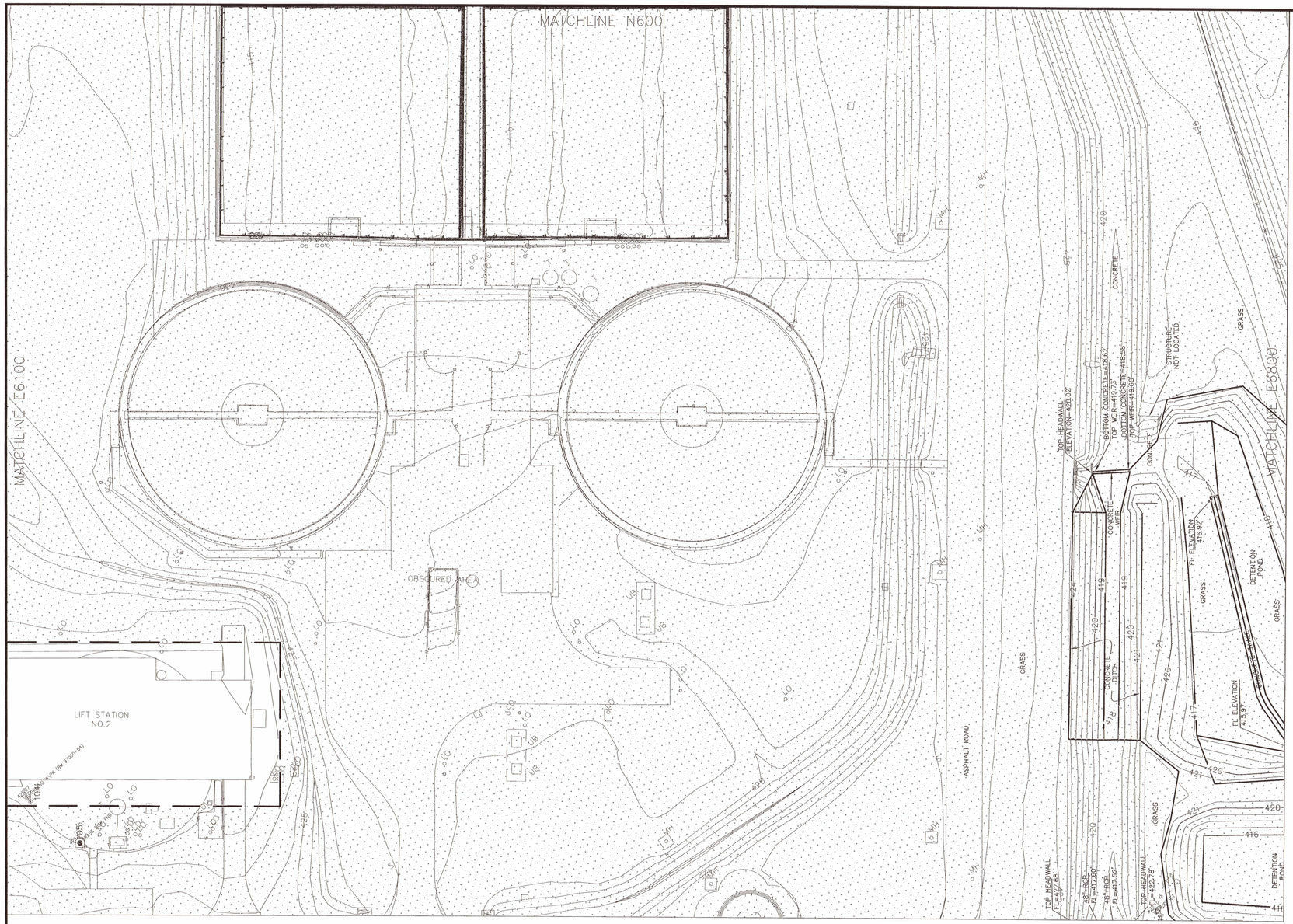

NO TREES REMOVED

SCALE IN FEET
30 0 30
(SCALE BAR MEASURES 2" WHEN PLOTTED FULL SIZE)

PLANT TRUE

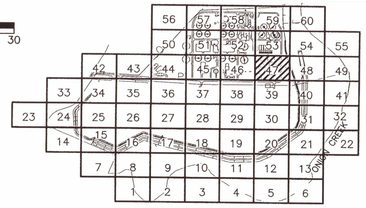

KEY LOCATION MAP
NTS

LEGEND

- LIMITS OF CONSTRUCTION
- SF — SILT FENCE FOR EROSION CONTROL
- TP — TREE PROTECTION
- ROCK BERM
- EXISTING TREE TO REMAIN
- OUTSIDE LIMITS OF CONSTRUCTION
- STABILIZED CONSTRUCTION ENTRANCE (SCE)
- DIRECTION OF FLOW

NOTE:

1. IF DISTURBED AREA IS NOT TO BE WORKED ON FOR MORE THAN 14 DAYS, DISTURBED AREA NEEDS TO BE STABILIZED BY REVEGETATION, MULCH, TARP OR REVEGETATION MATTING. [ECM 1.4.4.B.3, SECTION 5, I.]
2. ENVIRONMENTAL INSPECTOR HAS THE AUTHORITY TO ADD AND/OR MODIFY EROSION/SEDIMENTATION CONTROLS ON SITE TO KEEP PROJECT IN-COMPLIANCE WITH THE CITY OF AUSTIN RULES AND REGULATIONS. [LDC 25-8-183]
3. CONTRACTOR SHALL UTILIZE DUST CONTROL MEASURES DURING SITE CONSTRUCTION SUCH AS IRRIGATION TRUCKS AND MULCHING AS PER ECM 1.4.5(A), OR AS DIRECTED B THE ENVIRONMENTAL INSPECTOR.
4. THE CONTRACTOR WILL CLEAN UP SPOILS THAT MIGRATE ONTO THE ROADS A MINIMUM OF ONCE DAILY. [ECM 1.4.4.D.4]
5. NO E&S REQUIRED FOR IMPROVEMENTS INSIDE BUILDINGS.

Development Services Department
JUL 19 2019

SITE PLAN APPROVAL SHEET 34 OF 46
FILE NUMBER: SP-2018-0189C APPLICATION DATE: 04/29/2018
APPROVED BY COMMISSION ON _____ UNDER SECTION 112 OF CHAPTER 25-5 OF THE CITY OF AUSTIN CODE.
EXPIRATION DATE(25-5-81, LDC) 7/9/22
CASE MANAGER CHRISTINE BARTON-HOLMES
PROJECT EXPIRATION DATE (ORD. 970905-A) _____
DWPZ DDZ
DIRECTOR, DEVELOPMENT SERVICES DEPARTMENT
RELEASED FOR GENERAL COMPLIANCE 7/9/19 ZONING P
Rev. 1 _____ Correction 1 _____
Rev. 2 _____ Correction 2 _____
Rev. 3 _____ Correction 3 _____
Final Plat must be recorded by the Project Expiration Date, if applicable. Subsequent Site Plans which do not comply with the Code current at the time of filing, and all required Building Permits and/or a notice of construction (if a building permit is not required), must also be approved prior to the Project Expiration Date.

BAR LENGTH ON ORIGINAL DRAWING EQUALS ONE INCH, ADJUST SCALE ACCORDINGLY.

CAS CONSULTING & SERVICES, INC.
CIVIL ENGINEERING | PROGRAM MANAGEMENT | CONSTRUCTION MANAGEMENT
7908 Cameron Road | Austin, TX 78754 | REG. NO. F-00357
Main: 512.836.2388 | Fax: 512.836.4515

STATE OF TEXAS
ANDREW M. ROOKE
66364
LICENSED
PROFESSIONAL ENGINEER
5/28/2019

NO.	DATE:	DESCRIPTION

HARUTUNIAN ENGINEERING INCORPORATED
TEXAS FIRM REGISTRATION NUMBER F-2408
ENGINEERING AND ENVIRONMENTAL CONSULTANTS
305 EAST HUNTLAND DRIVE SUITE 500
AUSTIN, TEXAS 78752

REUSE OF DOCUMENTS
This document, and the designs incorporated herein, is an instrument of professional service that has been developed, designed and prepared by Harutunian Engineering, Inc., and is not to be used, in whole or in part, for any other project without giving written notice to Harutunian Engineering, Inc.

DESIGNED BY:	CAS
CHECKED BY:	LR
APPROVED BY:	AMR
SUBMITTAL DATE:	MAY 2019
SCALE:	

SOUTH AUSTIN REGIONAL WASTEWATER TREATMENT PLANT
ELECTRICAL SUBSTATION NO. 1 REPLACEMENT PROJECT
CIP I.D.# 3333.032

EROSION CONTROL SHEET 7

PROJECT NO: 2014-300 | SHT. 34 OF 46 | DWG NO. A-C-047A

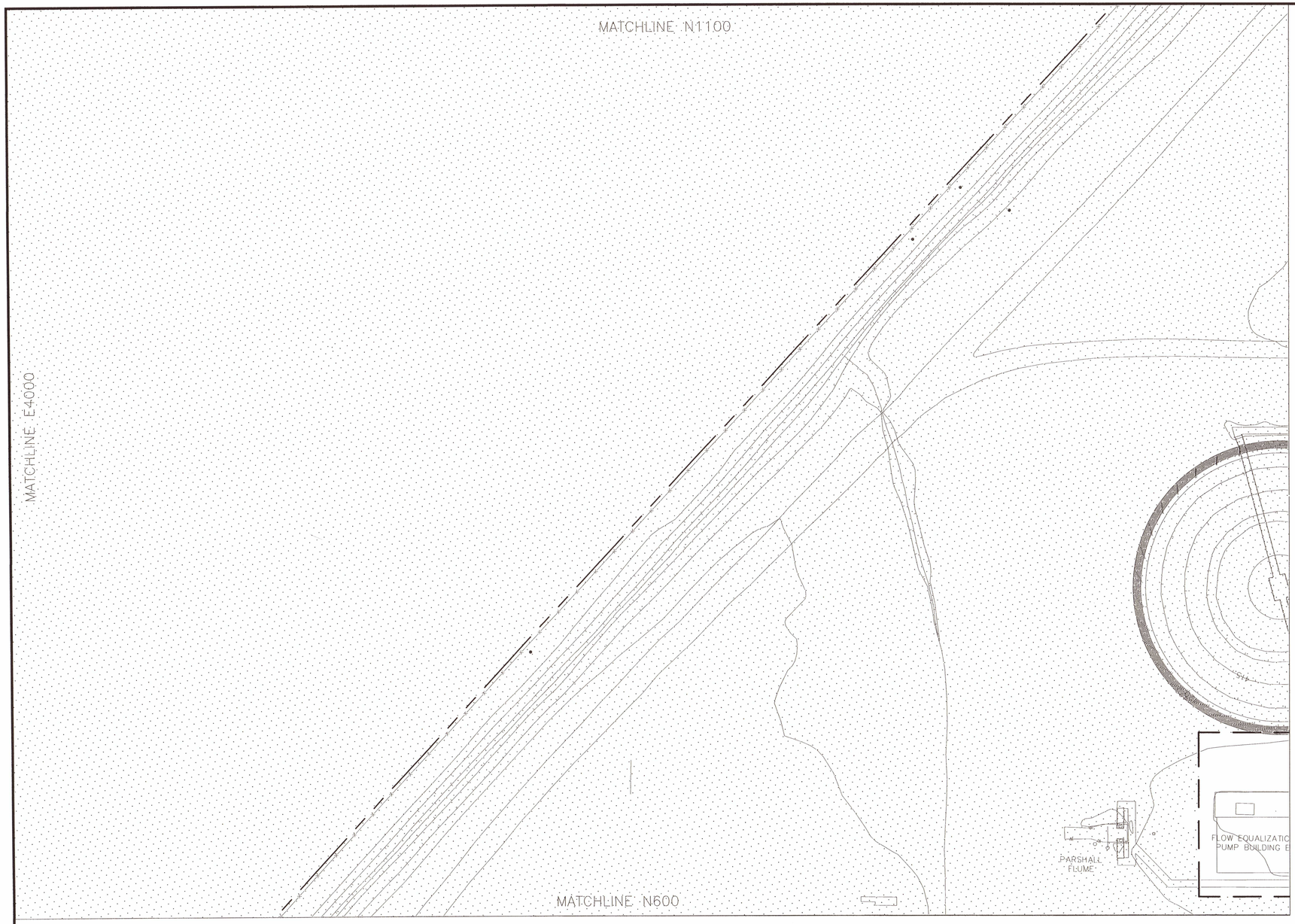

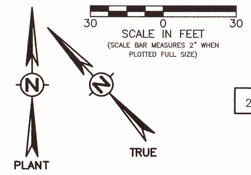

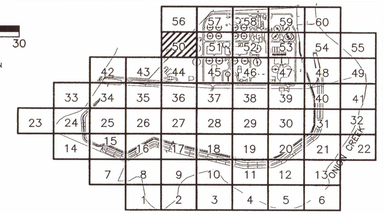

KEY LOCATION MAP
NTS

LEGEND

- LIMITS OF CONSTRUCTION
- SF — SILT FENCE FOR EROSION CONTROL
- TP — TREE PROTECTION
- ROCK BERM
- EXISTING TREE TO REMAIN
- OUTSIDE LIMITS OF CONSTRUCTION
- STABILIZED CONSTRUCTION ENTRANCE (SCE)
- DIRECTION OF FLOW

NOTE:

1. IF DISTURBED AREA IS NOT TO BE WORKED ON FOR MORE THAN 14 DAYS, DISTURBED AREA NEEDS TO BE STABILIZED BY REVEGETATION, MULCH, TARP OR REVEGETATION MATTING. [ECM 1.4.4.B.3, SECTION 5, I.]
2. ENVIRONMENTAL INSPECTOR HAS THE AUTHORITY TO ADD AND/OR MODIFY EROSION/SEDIMENTATION CONTROLS ON SITE TO KEEP PROJECT IN-COMPLIANCE WITH THE CITY OF AUSTIN RULES AND REGULATIONS. [LDC 25-8-183]
3. CONTRACTOR SHALL UTILIZE DUST CONTROL MEASURES DURING SITE CONSTRUCTION SUCH AS IRRIGATION TRUCKS AND MULCHING AS PER ECM 1.4.5(A), OR AS DIRECTED B THE ENVIRONMENTAL INSPECTOR.
4. THE CONTRACTOR WILL CLEAN UP SPOILS THAT MIGRATE ONTO THE ROADS A MINIMUM OF ONCE DAILY. [ECM 1.4.4.D.4]
5. NO E&S REQUIRED FOR IMPROVEMENTS INSIDE BUILDINGS.

NO TREES REMOVED

Development Services Department
JUL 10 2019

SITE PLAN APPROVAL SHEET 35 OF 46
FILE NUMBER: SP-2018-0189C APPLICATION DATE: 04/26/2018
APPROVED BY COMMISSION ON _____ UNDER SECTION 112
OF CHAPTER 25-5 OF THE CITY OF AUSTIN CODE.
EXPIRATION DATE(25-5-81, LDC) 7/13/22
CASE MANAGER CHRISTINE BARTON-HOLMES
PROJECT EXPIRATION DATE (ORD. #970905-A) _____
DMPZ DDZ
DIRECTOR, DEVELOPMENT SERVICES DEPARTMENT
RELEASED FOR GENERAL COMPLIANCE 7/13/19 ZONING P
Rev. 1 _____ Correction 1 _____
Rev. 2 _____ Correction 2 _____
Rev. 3 _____ Correction 3 _____
Final Plat must be recorded by the Project Expiration Date, if applicable. Subsequent Site Plans which do not comply with the Code current at the time of filing, and all required Building Permits and/or a notice of construction (if a building permit is not required), must also be approved prior to the Project Expiration Date.

BAR LENGTH ON ORIGINAL DRAWING EQUALS ONE INCH, ADJUST SCALE ACCORDINGLY.

CAS CONSULTING & SERVICES, INC.
CIVIL ENGINEERING | PROGRAM MANAGEMENT | CONSTRUCTION MANAGEMENT
7908 Cameron Road | Austin, TX 78754 |REG. NO. F-003572
Main: 512.836.2388 | Fax: 512.836.4515

STATE OF TEXAS
ANDREW M. ROSKE
66364
LICENSED PROFESSIONAL ENGINEER
5/28/2019

NO.	DATE:	DESCRIPTION

HARUTUNIAN ENGINEERING INCORPORATED
TEXAS FIRM REGISTRATION NUMBER F-2408
ENGINEERING AND ENVIRONMENTAL CONSULTANTS
305 EAST HUNTLAND DRIVE SUITE 500
AUSTIN, TEXAS 78752

REUSE OF DOCUMENTS
This document, and the designs incorporated herein, is an instrument of professional service that has been developed, designed and prepared by Harutunian Engineering, Inc., and is not to be used, in whole or in part, for any other project without giving written notice to Harutunian Engineering, Inc.

DESIGNED BY:	CAS
CHECKED BY:	LR
APPROVED BY:	AMR
SUBMITTAL DATE:	MAY 2019
SCALE:	

SOUTH AUSTIN REGIONAL WASTEWATER TREATMENT PLANT
ELECTRICAL SUBSTATION NO. 1 REPLACEMENT PROJECT
CIP I.D.# 3333.032

EROSION CONTROL SHEET 8

PROJECT NO: 2014-300 | SHT. 35 OF 46 | DWG NO. A-C-050A

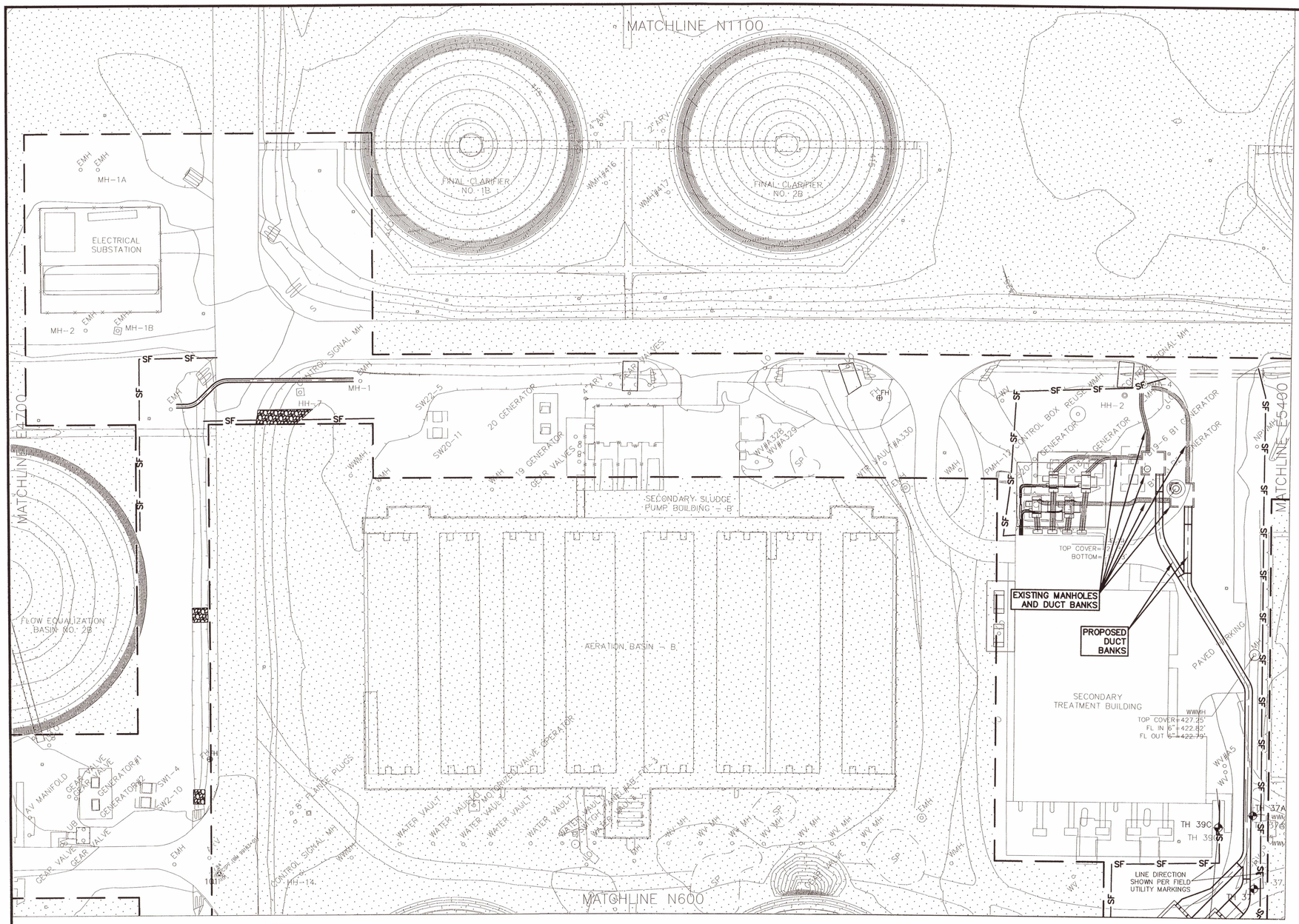

NO TREES REMOVED

BAR LENGTH ON ORIGINAL DRAWING EQUALS ONE INCH, ADJUST SCALE ACCORDINGLY.

SCALE IN FEET
30 0 30
(SCALE BAR MEASURES 2" WHEN PLOTTED FULL SIZE)

PLANT TRUE

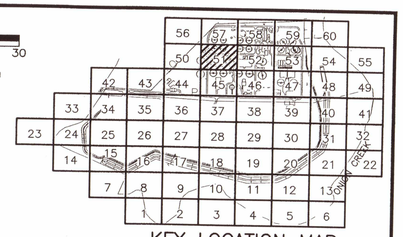

KEY LOCATION MAP
NTS

LEGEND

- LIMITS OF CONSTRUCTION
- SF — SILT FENCE FOR EROSION CONTROL
- TP — TREE PROTECTION
- ROCK BERM
- EXISTING TREE TO REMAIN
- OUTSIDE LIMITS OF CONSTRUCTION
- STABILIZED CONSTRUCTION ENTRANCE (SCE)
- DIRECTION OF FLOW

NOTE:

1. IF DISTURBED AREA IS NOT TO BE WORKED ON FOR MORE THAN 14 DAYS, DISTURBED AREA NEEDS TO BE STABILIZED BY REVEGETATION, MULCH, TARP OR REVEGETATION MATTING. [ECM 1.4.4.B.3, SECTION 5, 1.]
2. ENVIRONMENTAL INSPECTOR HAS THE AUTHORITY TO ADD AND/OR MODIFY EROSION/SEDIMENTATION CONTROLS ON SITE TO KEEP PROJECT IN-COMPLIANCE WITH THE CITY OF AUSTIN RULES AND REGULATIONS. [LDC 25-8-183]
3. CONTRACTOR SHALL UTILIZE DUST CONTROL MEASURES DURING SITE CONSTRUCTION SUCH AS IRRIGATION TRUCKS AND MULCHING AS PER ECM 1.4.5(A), OR AS DIRECTED B THE ENVIRONMENTAL INSPECTOR.
4. THE CONTRACTOR WILL CLEAN UP SPOILS THAT MIGRATE ONTO THE ROADS A MINIMUM OF ONCE DAILY. [ECM 1.4.4.D.4]

Development Services Department
JUL 10 2019

SITE PLAN APPROVAL SHEET 36 OF 46
FILE NUMBER: SP-2018-0189C APPLICATION DATE: 04/26/2018
APPROVED BY COMMISSION ON _____ UNDER SECTION 112
OF CHAPTER 25-5 OF THE CITY OF AUSTIN CODE.
EXPIRATION DATE(25-5-81, LDC) 7/5/22
CASE MANAGER CHRISTINE BARTON-HOLMES
PROJECT EXPIRATION DATE (ORD. #970605-A)
DMPZ DDZ

DIRECTOR, DEVELOPMENT SERVICES DEPARTMENT
RELEASED FOR GENERAL COMPLIANCE: 7/5/19 ZONING P
Rev. 1 _____ Correction 1 _____
Rev. 2 _____ Correction 2 _____
Rev. 3 _____ Correction 3 _____
Final Plat must be recorded by the Project Expiration Date, if applicable. Subsequent Site Plans which do not comply with the Code current at the time of filing, and all required Building Permits and/or a notice of construction (if a building permit is not required), must also be approved prior to the Project Expiration Date.

CAS CONSULTING & SERVICES, INC.
CIVIL ENGINEERING | PROGRAM MANAGEMENT | CONSTRUCTION MANAGEMENT
7908 Cameron Road | Austin, TX 78754 |REG. NO. F-003572
Main: 512.836.2388 | Fax: 512.836.4515

STATE OF TEXAS
ANDREW M. ROCKE
66364
LICENSED PROFESSIONAL ENGINEER
5/28/2019

NO.	DATE:	DESCRIPTION

HARUTUNIAN ENGINEERING INCORPORATED
TEXAS FIRM REGISTRATION NUMBER F-2408
ENGINEERING AND ENVIRONMENTAL CONSULTANTS
305 EAST HUNTLAND DRIVE SUITE 500
AUSTIN, TEXAS 78752

REUSE OF DOCUMENTS
This document, and the designs incorporated herein, is an instrument of professional service that has been developed, designed and prepared by Harutunian Engineering, Inc., and is not to be used, in whole or in part, for any other project without giving written notice to Harutunian Engineering, Inc.

DESIGNED BY:	CAS
CHECKED BY:	LR
APPROVED BY:	AMR
SUBMITTAL DATE:	MAY 2019
SCALE:	

SOUTH AUSTIN REGIONAL WASTEWATER TREATMENT PLANT
ELECTRICAL SUBSTATION NO. 1 REPLACEMENT PROJECT
CIP I.D.# 3333.032

EROSION CONTROL SHEET 9

PROJECT NO: 2014-300 | SHT. 36 OF 46 | DWG NO. A-C-051A

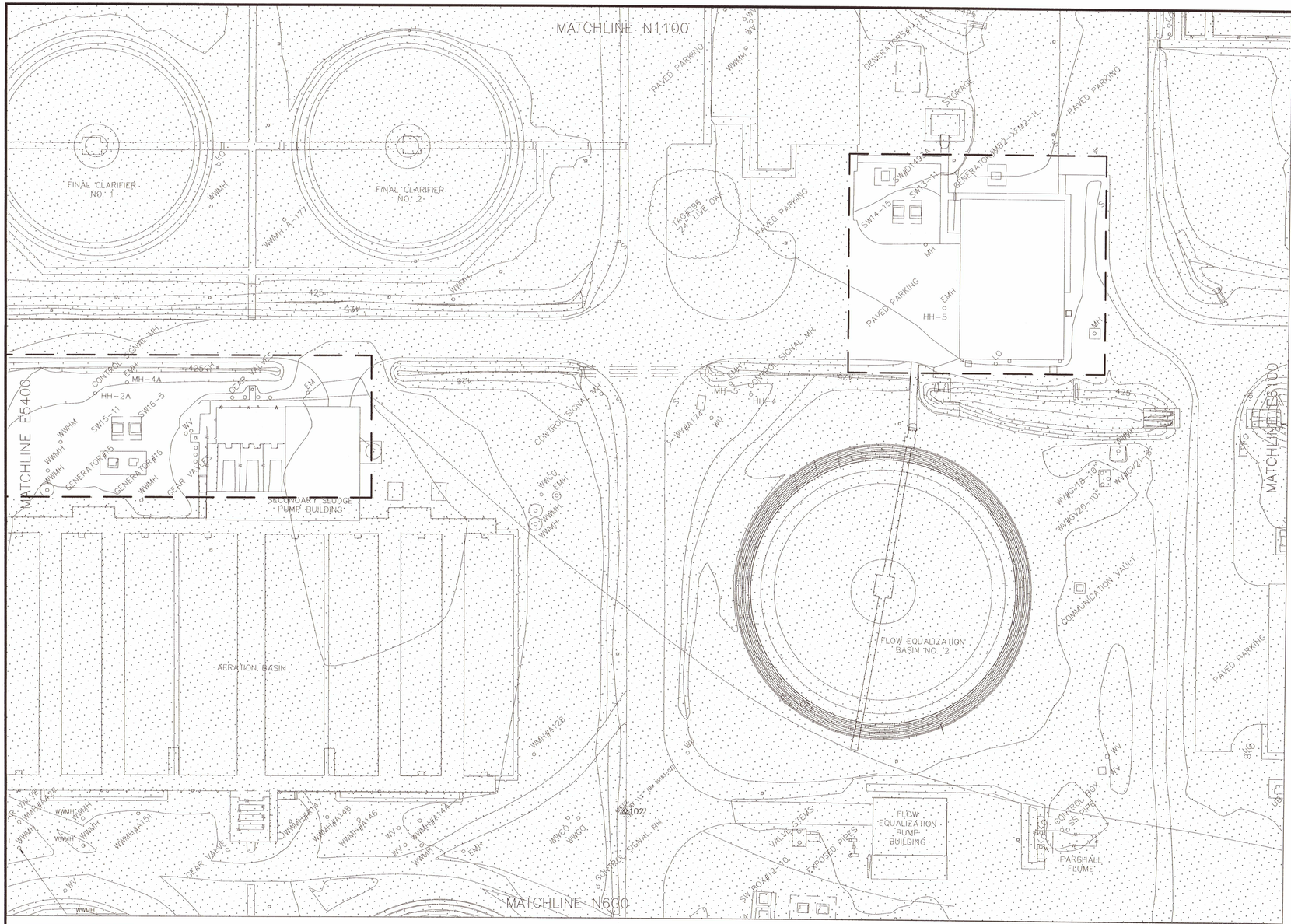

NO TREES REMOVED

SCALE IN FEET
30 0 30
(SCALE BAR MEASURES 2" WHEN PLOTTED FULL SIZE)

PLANT TRUE

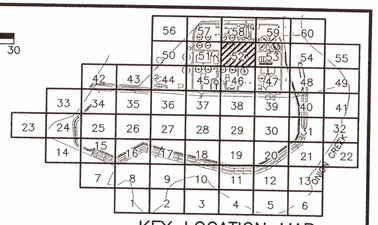

KEY LOCATION MAP
NTS

LEGEND

- LIMITS OF CONSTRUCTION
- SF — SILT FENCE FOR EROSION CONTROL
- TP — TREE PROTECTION
- ROCK BERM
- EXISTING TREE TO REMAIN
- OUTSIDE LIMITS OF CONSTRUCTION
- STABILIZED CONSTRUCTION ENTRANCE (SCE)
- DIRECTION OF FLOW

NOTE:
1. IF DISTURBED AREA IS NOT TO BE WORKED ON FOR MORE THAN 14 DAYS, DISTURBED AREA NEEDS TO BE STABILIZED BY REVEGETATION, MULCH, TARP OR REVEGETATION MATTING. [ECM 1.4.4.B.3, SECTION 5, L]
2. ENVIRONMENTAL INSPECTOR HAS THE AUTHORITY TO ADD AND/OR MODIFY EROSION/SEDIMENTATION CONTROLS ON SITE TO KEEP PROJECT IN-COMPLIANCE WITH THE CITY OF AUSTIN RULES AND REGULATIONS. [LDC 25-8-183]
3. CONTRACTOR SHALL UTILIZE DUST CONTROL MEASURES DURING SITE CONSTRUCTION SUCH AS IRRIGATION TRUCKS AND MULCHING AS PER ECM 1.4.5(A), OR AS DIRECTED B THE ENVIRONMENTAL INSPECTOR.
4. THE CONTRACTOR WILL CLEAN UP SPOILS THAT MIGRATE ONTO THE ROADS A MINIMUM OF ONCE DAILY. [ECM 1.4.4.D.4]
5. NO E&S REQUIRED FOR IMPROVEMENTS INSIDE BUILDINGS.

SITE PLAN APPROVAL SHEET 37 OF 46
FILE NUMBER: SP-2018-0189C APPLICATION DATE: 04/26/2018
APPROVED BY COMMISSION ON _____ UNDER SECTION 112
OF CHAPTER 25-5 OF THE CITY OF AUSTIN CODE.
EXPIRATION DATE(25-5-81, LDC) 7/3/22
CASE MANAGER: CHRISTINE BARTON-HOLMES
PROJECT EXPIRATION DATE (ORD. #970905-A) _____
DWPZ ____ DDZ
DIRECTOR, DEVELOPMENT SERVICES DEPARTMENT
RELEASED FOR GENERAL COMPLIANCE: 7/3/19 ZONING P
Rev. 1 _____ Correction 1 _____
Rev. 2 _____ Correction 2 _____
Rev. 3 _____ Correction 3 _____
Final Plat must be recorded by the Project Expiration Date, if applicable. Subsequent Site Plans which do not comply with the Code current at the time of filing, and all required Building Permits and/or a notice of construction (if a building permit is not required), must also be approved prior to the Project Expiration Date.

Development Services Department
JUL 17 2019

BAR LENGTH ON ORIGINAL DRAWING EQUALS ONE INCH, ADJUST SCALE ACCORDINGLY.

CAS CONSULTING & SERVICES, INC.
CIVIL ENGINEERING | PROGRAM MANAGEMENT | CONSTRUCTION MANAGEMENT
7908 Cameron Road | Austin, TX 78754 | REG. NO. F-003572
Main: 512.836.2388 | Fax: 512.836.4515

STATE OF TEXAS — ANDREW M. ROOKE — 66364 — LICENSED PROFESSIONAL ENGINEER
5/28/2019

NO.	DATE:	DESCRIPTION

HARUTUNIAN ENGINEERING INCORPORATED
TEXAS FIRM REGISTRATION NUMBER F-2408
ENGINEERING AND ENVIRONMENTAL CONSULTANTS
305 EAST HUNTLAND DRIVE SUITE 500
AUSTIN, TEXAS 78752

REUSE OF DOCUMENTS
This document, and the designs incorporated herein, is an instrument of professional service that has been developed, designed and prepared by Harutunian Engineering, Inc., and is not to be used, in whole or in part, for any other project without giving written notice to Harutunian Engineering, Inc.

DESIGNED BY:	CAS
CHECKED BY:	LR
APPROVED BY:	AMR
SUBMITTAL DATE:	MAY 2019
SCALE:	

SOUTH AUSTIN REGIONAL WASTEWATER TREATMENT PLANT
ELECTRICAL SUBSTATION NO. 1 REPLACEMENT PROJECT
CIP I.D.# 3333.032

EROSION CONTROL SHEET 10

PROJECT NO: 2014-300 | SHT. 37 OF 46 | DWG NO. A-C-052A

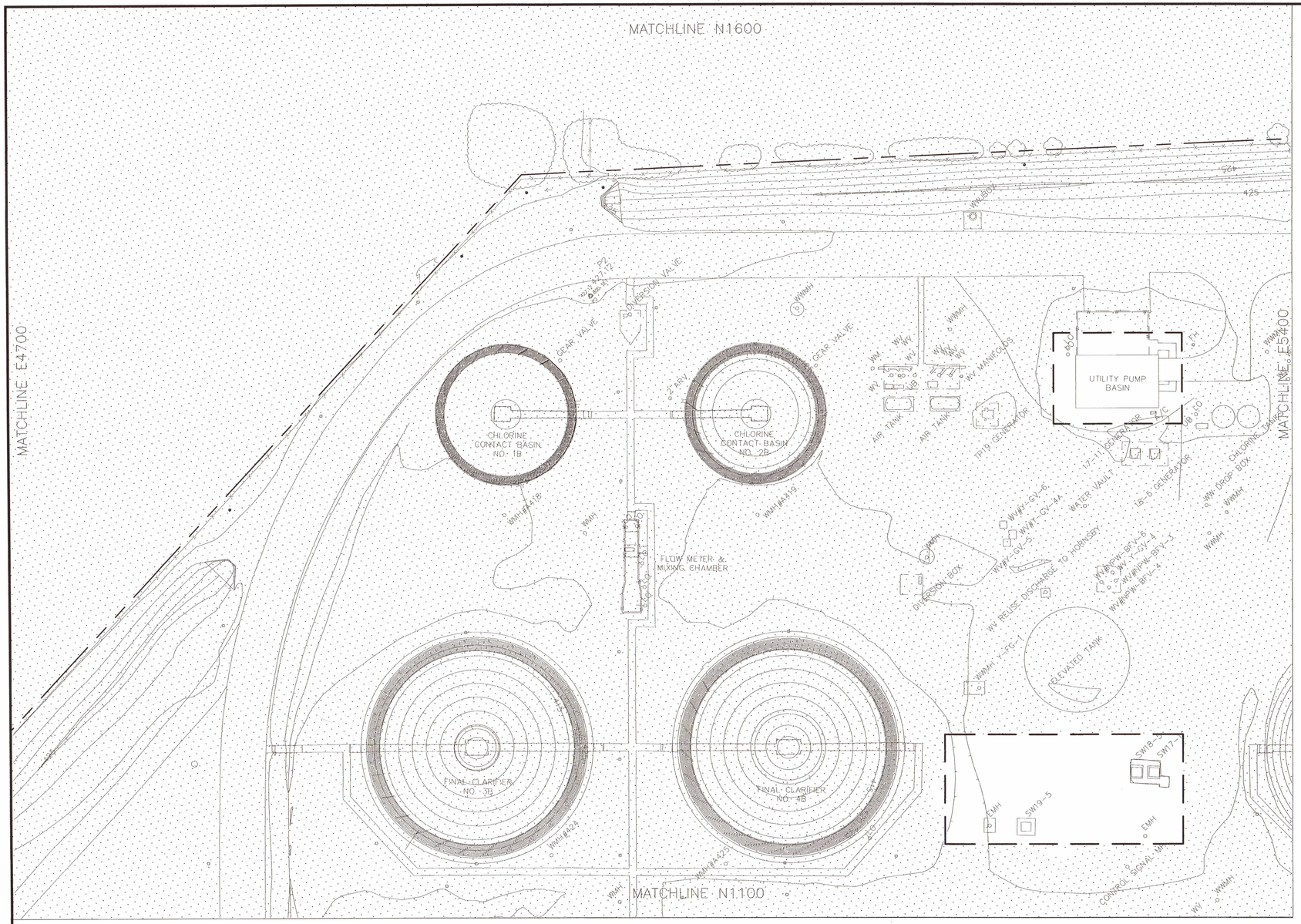

NO TREES REMOVED

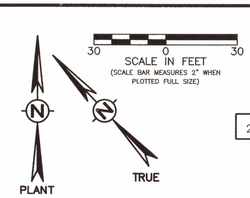

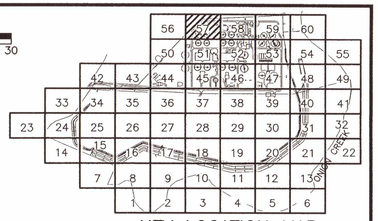

KEY LOCATION MAP
NTS

LEGEND

- LIMITS OF CONSTRUCTION
- SF — SILT FENCE FOR EROSION CONTROL
- TP — TREE PROTECTION
- ROCK BERM
- EXISTING TREE TO REMAIN
- OUTSIDE LIMITS OF CONSTRUCTION
- STABILIZED CONSTRUCTION ENTRANCE (SCE)
- DIRECTION OF FLOW

NOTE:

1. IF DISTURBED AREA IS NOT TO BE WORKED ON FOR MORE THAN 14 DAYS, DISTURBED AREA NEEDS TO BE STABILIZED BY REVEGETATION, MULCH, TARP OR REVEGETATION MATTING. [ECM 1.4.4.B.3, SECTION 5, I.]
2. ENVIRONMENTAL INSPECTOR HAS THE AUTHORITY TO ADD AND/OR MODIFY EROSION/SEDIMENTATION CONTROLS ON SITE TO KEEP PROJECT IN-COMPLIANCE WITH THE CITY OF AUSTIN RULES AND REGULATIONS. [LDC 25-8-183]
3. CONTRACTOR SHALL UTILIZE DUST CONTROL MEASURES DURING SITE CONSTRUCTION SUCH AS IRRIGATION TRUCKS AND MULCHING AS PER ECM 1.4.5(A), OR AS DIRECTED B THE ENVIRONMENTAL INSPECTOR.
4. THE CONTRACTOR WILL CLEAN UP SPOILS THAT MIGRATE ONTO THE ROADS A MINIMUM OF ONCE DAILY. [ECM 1.4.4.D.4]
5. NO E&S REQUIRED FOR IMPROVEMENTS INSIDE BUILDINGS.

Development Services Department
JUL 10 2019

SITE PLAN APPROVAL SHEET 38 OF 46
FILE NUMBER: SP-2018-0189C APPLICATION DATE: 04/26/2018
APPROVED BY COMMISSION ON _____ UNDER SECTION 112
OF CHAPTER 25-5 OF THE CITY OF AUSTIN CODE.
EXPIRATION DATE(25-5-81, LDC) 7/3/22
CASE MANAGER CHRISTINE BARTON-HOLMES
PROJECT EXPIRATION DATE (ORD. #970905-A) _____
DWPZ_____ NPZ_____

DIRECTOR, DEVELOPMENT SERVICES DEPARTMENT
RELEASED FOR GENERAL COMPLIANCE 7/3/19 ZONING P
Rev. 1 _____ Correction 1 _____
Rev. 2 _____ Correction 2 _____
Rev. 3 _____ Correction 3 _____
Final Plat must be recorded by the Project Expiration Date, if applicable. Subsequent Site Plans which do not comply with the Code current at the time of filing, and all required Building Permits and/or a notice of construction (if a building permit is not required), must also be approved prior to the Project Expiration Date.

BAR LENGTH ON ORIGINAL DRAWING EQUALS ONE INCH, ADJUST SCALE ACCORDINGLY.

CAS CONSULTING & SERVICES, INC.
CIVIL ENGINEERING | PROGRAM MANAGEMENT | CONSTRUCTION MANAGEMENT
7908 Cameron Road | Austin, TX 78754 | TBPE REG. NO. F-003572
Main: 512.836.2388 | Fax: 512.837.4515

STATE OF TEXAS
ANDREW M. ROOKE
68364
LICENSED
PROFESSIONAL ENGINEER
5/28/2019

NO.	DATE:	DESCRIPTION

HARUTUNIAN ENGINEERING INCORPORATED
TEXAS FIRM REGISTRATION NUMBER F-2408
ENGINEERING AND ENVIRONMENTAL CONSULTANTS
305 EAST HUNTLAND DRIVE SUITE 500
AUSTIN, TEXAS 78752

REUSE OF DOCUMENTS
This document, and the designs incorporated herein, is an instrument of professional service that has been developed, designed and prepared by Harutunian Engineering, Inc., and is not to be used, in whole or in part, for any other project without giving written notice to Harutunian Engineering, Inc.

DESIGNED BY:	CAS
CHECKED BY:	LR
APPROVED BY:	AMR
SUBMITTAL DATE:	MAY 2019
SCALE:	

SOUTH AUSTIN REGIONAL WASTEWATER TREATMENT PLANT
ELECTRICAL SUBSTATION NO. 1 REPLACEMENT PROJECT
CIP I.D.# 3333.032

EROSION CONTROL SHEET 11

PROJECT NO: 2014-300 | SHT. 38 OF 46 | DWG NO. A-C-057A

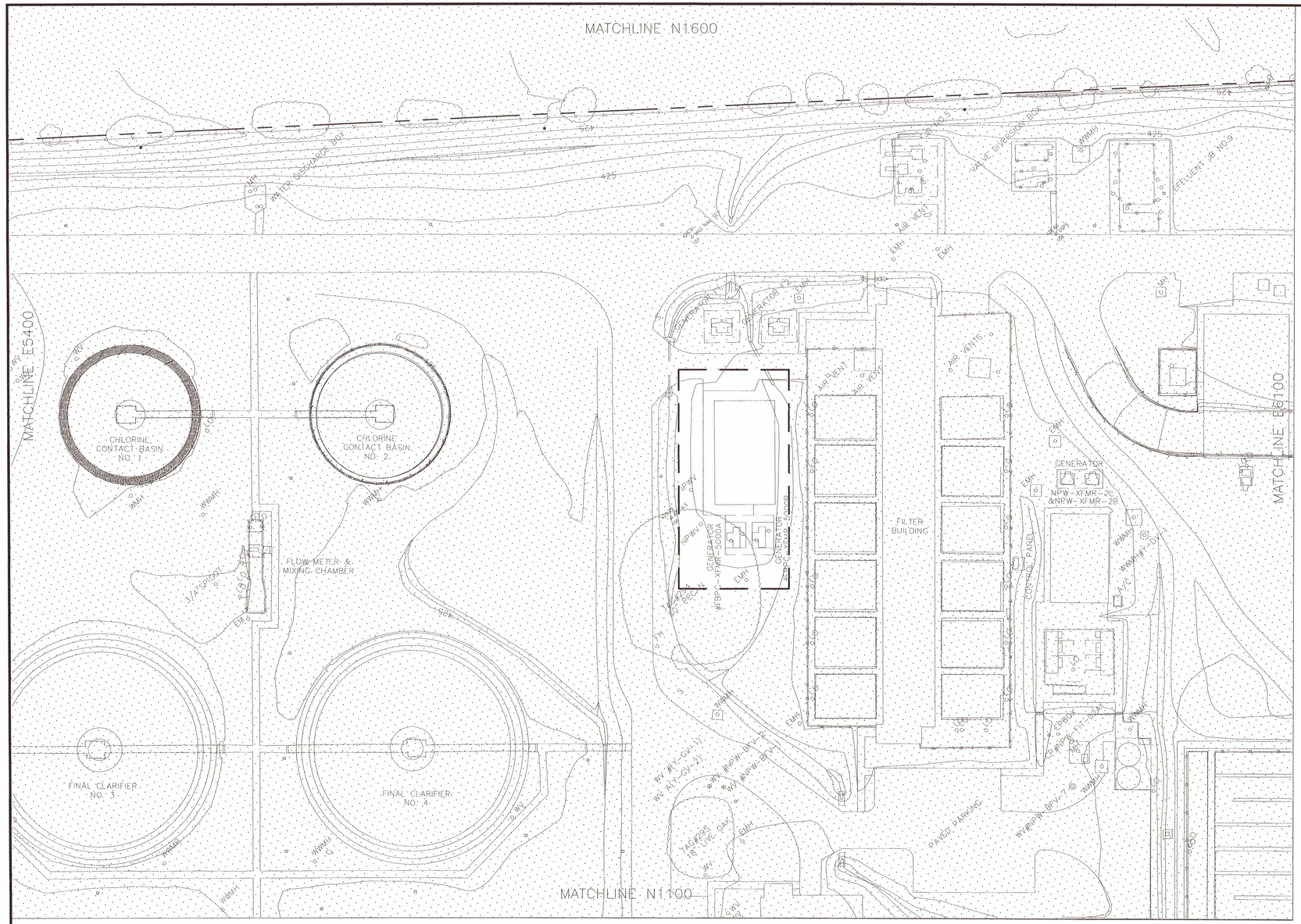

NO TREES REMOVED

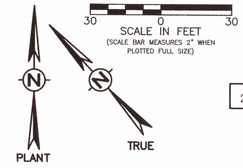

SCALE IN FEET
(SCALE BAR MEASURES 2" WHEN PLOTTED FULL SIZE)
30 0 30

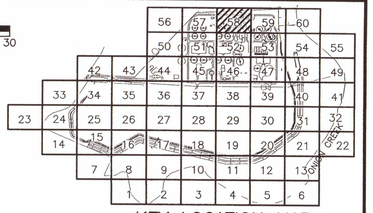

KEY LOCATION MAP
NTS

LEGEND

- LIMITS OF CONSTRUCTION
- SF — SILT FENCE FOR EROSION CONTROL
- TP — TREE PROTECTION
- ROCK BERM
- EXISTING TREE TO REMAIN
- OUTSIDE LIMITS OF CONSTRUCTION
- STABILIZED CONSTRUCTION ENTRANCE (SCE)
- DIRECTION OF FLOW

NOTE:

1. IF DISTURBED AREA IS NOT TO BE WORKED ON FOR MORE THAN 14 DAYS, DISTURBED AREA NEEDS TO BE STABILIZED BY REVEGETATION, MULCH, TARP OR REVEGETATION MATTING. [ECM 1.4.4.B.3, SECTION 5, 1.]
2. ENVIRONMENTAL INSPECTOR HAS THE AUTHORITY TO ADD AND/OR MODIFY EROSION/SEDIMENTATION CONTROLS ON SITE TO KEEP PROJECT IN-COMPLIANCE WITH THE CITY OF AUSTIN RULES AND REGULATIONS. [LDC 25-8-183]
3. CONTRACTOR SHALL UTILIZE DUST CONTROL MEASURES DURING SITE CONSTRUCTION SUCH AS IRRIGATION TRUCKS AND MULCHING AS PER ECM 1.4.5(A), OR AS DIRECTED B THE ENVIRONMENTAL INSPECTOR.
4. THE CONTRACTOR WILL CLEAN UP SPOILS THAT MIGRATE ONTO THE ROADS A MINIMUM OF ONCE DAILY. [ECM 1.4.4.D.4]
5. NO E&S REQUIRED FOR IMPROVEMENTS INSIDE BUILDINGS.

Development Services Department
JUL 17 2019

SITE PLAN APPROVAL SHEET 39 OF 46
FILE NUMBER: SP-2018-0189C APPLICATION DATE: 04/26/2018
APPROVED BY COMMISSION ON _____ UNDER SECTION 112
OF CHAPTER 25-5 OF THE CITY OF AUSTIN CODE.
EXPIRATION DATE(25-5-81, LDC) 7/5/2022
CASE MANAGER: CHRISTINE BARTON-HOLMES
PROJECT EXPIRATION DATE (ORD. #970905-A) _____
DWPZ ____ DDZ ____
DIRECTOR, DEVELOPMENT SERVICES DEPARTMENT
RELEASED FOR GENERAL COMPLIANCE: 7/5/19 ZONING: P
Rev. 1 _____ Correction 1 _____
Rev. 2 _____ Correction 2 _____
Rev. 3 _____ Correction 3 _____
Final Plat must be recorded by the Project Expiration Date, if applicable. Subsequent Site Plans which do not comply with the Code current at the time of filing, and all required Building Permits and/or a notice of construction (if a building permit is not required), must also be approved prior to the Project Expiration Date.

BAR LENGTH ON ORIGINAL DRAWING EQUALS ONE INCH, ADJUST SCALE ACCORDINGLY.

CAS CONSULTING & SERVICES, INC.
CIVIL ENGINEERING | PROGRAM MANAGEMENT | CONSTRUCTION MANAGEMENT
7908 Cameron Road | Austin, TX 78754 | REG. NO. F-00357
Main: 512.836.2388 | Fax: 512.836.4515

STATE OF TEXAM
ANDREW M. ARNOLD
66364
LICENSED
PROFESSIONAL ENGINEER
5/28/2019

NO.	DATE:	DESCRIPTION

HARUTUNIAN ENGINEERING INCORPORATED
TEXAS FIRM REGISTRATION NUMBER F-2408
ENGINEERING AND ENVIRONMENTAL CONSULTANTS
305 EAST HUNTLAND DRIVE SUITE 500
AUSTIN, TEXAS 78752

REUSE OF DOCUMENTS
This document, and the designs incorporated herein, is an instrument of professional service that has been developed, designed and prepared by Harutunian Engineering, Inc., and is not to be used, in whole or in part, for any other project without giving written notice to Harutunian Engineering, Inc.

DESIGNED BY:	CAS
CHECKED BY:	LR
APPROVED BY:	AMR
SUBMITTAL DATE:	MAY 2019
SCALE:	

SOUTH AUSTIN REGIONAL WASTEWATER TREATMENT PLANT
ELECTRICAL SUBSTATION NO. 1 REPLACEMENT PROJECT
CIP I.D.# 3333.032

EROSION CONTROL SHEET 12

PROJECT NO: 2014-300 | SHT. 39 OF 46 | DWG NO. A-C-058A

NOTE:

1. DRAWING PROVIDED FOR REFERENCE ONLY. ACTUAL FIELD CONDITIONS MAY BE DIFFERENT FROM THOSE SHOWN IN THIS DRAWING. CONTRACTOR TO FIELD VERIFY INSTALLED CONDITIONS IMPACTING OR IMPACTED BY HIS WORK PRIOR TO INITIATING WORK.

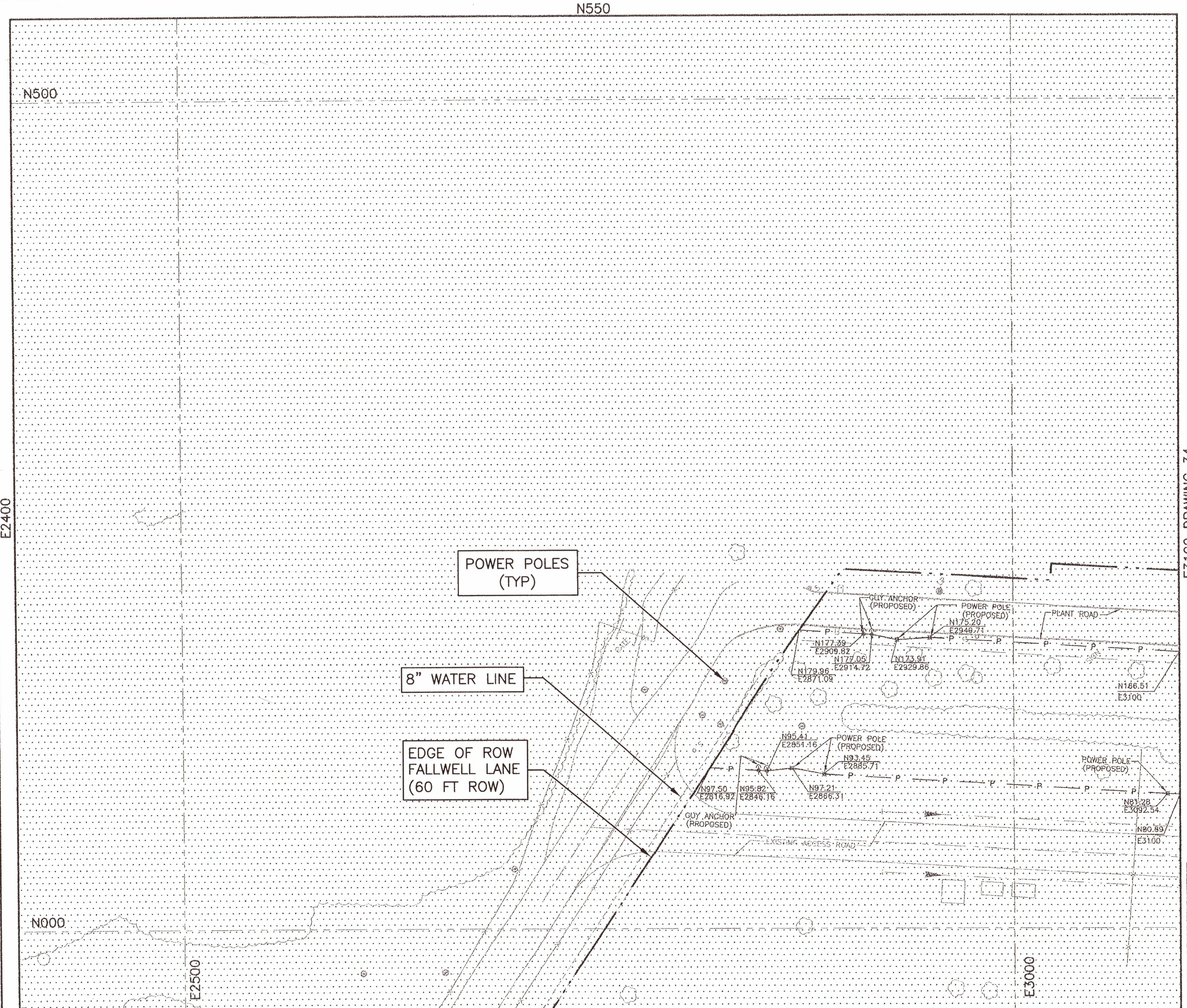

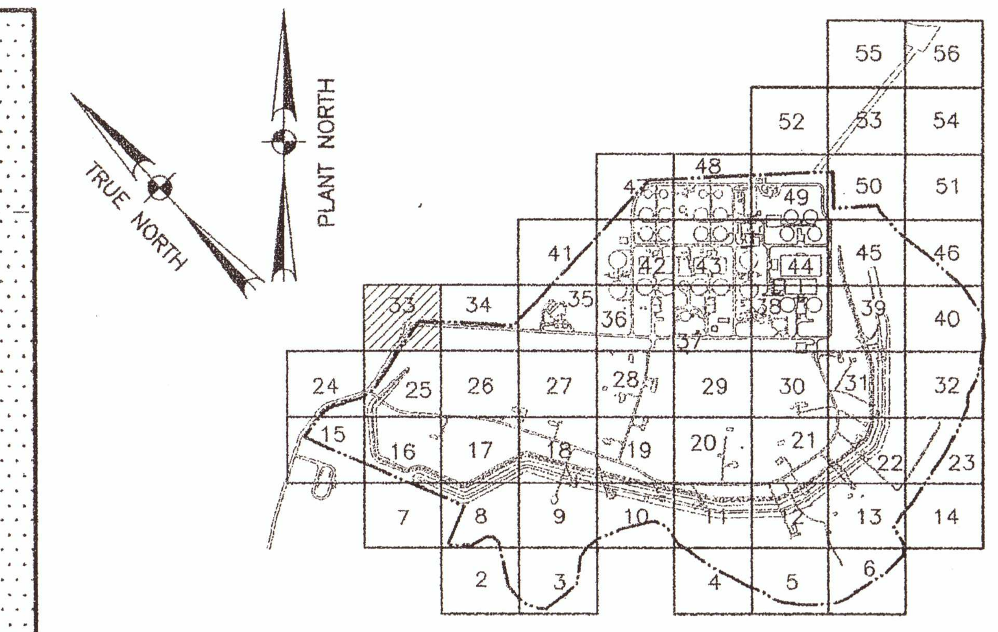

KEY LOCATION MAP

— — —	PLANT COORDINATE GRID
—— · ——	PROPERTY LIMITS
———	PROJECT SHEET GRID
▬ ▬ ▬	CONSTRUCTION LIMITS
(dotted)	BY OTHERS, UNLESS NOTED OTHERWISE

NOTES:

1. LOCATION OF EXISTING FACILITIES DEFINED FROM RECORD DRAWING INFORMATION. FIELD VERIFICATION OF LOCATION IS REQUIRED AT POINTS OF INTERFACE WITH EXISTING FACILITIES.
2. THIS DRAWING IS INCLUDED FOR INFORMATIONAL PURPOSES TO SHOW ROUTING OF OVERHEAD POWER LINES INTO THE NEW ELECTRICAL SUBSTATION.

RECORD DRAWING
THIS CONSTRUCTION DOCUMENT WAS PREPARED USING INFORMATION SUPPLIED BY THE CONTRACTOR TO REPRESENT CONSTRUCTION CHANGES. THIS DOCUMENT IS FOR INFORMATION AND REFERENCE IN CONNECTION WITH THE OWNER'S USE AND OCCUPANCY OF THE PROJECT AND IS NOT INTENDED FOR BID, PERMIT OR CONSTRUCTION.
BY: [signature] DATE: 1/12/07

WARNING: IF THIS BAR DOES NOT MEASURE 1" THEN DRAWING IS NOT TO SCALE

CITY OF AUSTIN, TEXAS
SOUTH AUSTIN REGIONAL WASTEWATER TREATMENT PLANT
TRAIN C SUBSTATION

DIMENSIONAL CONTROL PLAN

Turner Collie & Braden Inc.
ENGINEERS • PLANNERS • PROJECT MANAGERS

Unit	PUBLIC WORKS	Scale	1"=30'	Date	JULY 2002
Designed	SGE	Checked	SGE	Job No.	72-07109-339
Drawn	PW	Approved	SGE	Dwg No.	9AD33

STATE OF TEXAS — SHELBY G. ECKOLS — 41495 — REGISTERED PROFESSIONAL ENGINEER

SITE PLAN APPROVAL SHEET 40 OF 46
FILE NUMBER: SP-2018-0189C APPLICATION DATE: 04/26/2018
APPROVED BY COMMISSION ON ______ UNDER SECTION 112
OF CHAPTER 25-5 OF THE CITY OF AUSTIN CODE.
EXPIRATION DATE(25-5-81, LDC) 7/3/22
CASE MANAGER CHRISTINE BARTON-HOLMES
PROJECT EXPIRATION DATE (ORD. #970905-A) ______
DWPZ ____ DDZ ____
[signature]
DIRECTOR, DEVELOPMENT SERVICES DEPARTMENT
RELEASED FOR GENERAL COMPLIANCE: 7/3/19 ZONING P
Rev. 1 ______ Correction 1 ______
Rev. 2 ______ Correction 2 ______
Rev. 3 ______ Correction 3 ______
Final Plat must be recorded by the Project Expiration Date, if applicable. Subsequent Site Plans which do not comply with the Code current at the time of filing, and all required Building Permits and/or a notice of construction (if a building permit is not required), must also be approved prior to the Project Expiration Date.

Development Services Department JUL 10 2019

BAR LENGTH ON ORIGINAL DRAWING EQUALS ONE INCH, ADJUST SCALE ACCORDINGLY.

AECOM
AECOM TECHNICAL SERVICES INC.
9400 AMBERGLEN BOULEVARD
AUSTIN, TEXAS 78729
WWW.AECOM.COM
TBPE REG. NO. F-3580

STATE OF TEXAS — CASEY G. WAUTERS — 93889 — LICENSED PROFESSIONAL ENGINEER — 5/28/19

NO.	DATE:	DESCRIPTION

HARUTUNIAN ENGINEERING INCORPORATED
TEXAS FIRM REGISTRATION NUMBER F-2408
ENGINEERING AND ENVIRONMENTAL CONSULTANTS
305 EAST HUNTLAND DRIVE SUITE 500
AUSTIN, TEXAS 78752

REUSE OF DOCUMENTS
This document, and the designs incorporated herein, is an instrument of professional service that has been developed, designed and prepared by Harutunian Engineering, Inc., and is not to be used, in whole or in part, for any other project without giving written notice to Harutunian Engineering, Inc.

DESIGNED BY:	CW
CHECKED BY:	JNB
APPROVED BY:	SGE
SUBMITTAL DATE:	MAY 2019
SCALE:	AS NOTED

SOUTH AUSTIN REGIONAL WASTEWATER TREATMENT PLANT
ELECTRICAL SUBSTATION NO. 1 REPLACEMENT PROJECT
CIP I.D.# 3333.032

REFERENCE DRAWING

PROJECT NO: 2014-300 SHT. 40 OF 46 DWG NO. T-C-017B

SP-2018-0189C

CITY OF AUSTIN – STANDARD NOTES
EROSION AND SEDIMENTATION CONTROL

1. THE CONTRACTOR SHALL INSTALL EROSION/SEDIMENTATION CONTROLS AND TREE/NATURAL AREA PROTECTIVE FENCING PRIOR TO ANY SITE PREPARATION WORK (CLEARING, GRUBBING, OR EXCAVATION).

2. THE PLACEMENT OF EROSION/SEDIMENTATION CONTROLS SHALL BE IN ACCORDANCE WITH THE ENVIRONMENTAL CRITERIA MANUAL AND THE APPROVED EROSION AND SEDIMENTATION CONTROL PLAN.

3. THE PLACEMENT OF TREE/NATURAL AREA PROTECTIVE FENCING SHALL BE IN ACCORDANCE WITH THE CITY OF AUSTIN STANDARD NOTES FOR TREE AND NATURAL AREA PROTECTION AND THE APPROVED GRADING/TREE AND NATURAL AREA PLAN.

4. A PRE-CONSTRUCTION CONFERENCE SHALL BE HELD ON-SITE WITH THE CONTRACTOR, DESIGN ENGINEER, PERMIT APPLICANT, AND ENVIRONMENTAL INSPECTOR AFTER INSTALLATION OF THE EROSION/SEDIMENTATION CONTROLS AND THE TREE/NATURAL AREA PROTECTION MEASURES AND PRIOR TO BEGINNING ANY SITE PREPARATION WORK. THE CONTRACTOR SHALL NOTIFY THE DEVELOPMENT SERVICES DEPARTMENT AT 512/974-2278, AT LEAST 3 DAYS PRIOR TO THE MEETING DATE.

5. ANY SIGNIFICANT VARIATION IN MATERIALS OR LOCATIONS OF CONTROLS OR FENCES FROM THOSE SHOWN ON THE APPROVED PLANS MUST BE APPROVED BY THE REVIEWING ENGINEER AND THE GENERAL PERMIT PROGRAM REPRESENTATIVE.

6. THE CONTRACTOR IS REQUIRED TO INSPECT THE CONTROLS AND FENCES AT DAILY INTERVALS AND AFTER SIGNIFICANT RAINFALL EVENTS TO ENSURE THAT THEY ARE FUNCTIONING PROPERLY. THE PERSON(S) RESPONSIBLE FOR MAINTENANCE OF CONTROLS AND FENCES SHALL IMMEDIATELY MAKE ANY NECESSARY REPAIRS TO DAMAGED AREAS. SILT ACCUMULATION AT CONTROLS MUST BE REMOVED WHEN THE DEPTH REACHES SIX (6) INCHES. SILT ACCUMULATION AT INLET DEVICES SHOULD BE REMOVED WHEN THE DEPTH REACHES TWO (2) INCHES.

7. PRIOR TO FINAL ACCEPTANCE BY THE CITY, HAUL ROADS AND WATERWAY CROSSINGS CONSTRUCTED FOR TEMPORARY CONTRACTOR ACCESS MUST BE REMOVED, ACCUMULATED SEDIMENT REMOVED FROM THE WATERWAY AND THE AREA RESTORED TO THE ORIGINAL GRADE AND REVEGETATED. ALL LAND CLEARING DEBRIS SHALL BE DISPOSED OF IN APPROVED SPOIL DISPOSAL SITES.

8. ALL WORK MUST STOP IF A VOID IN THE ROCK SUBSTRATE IS DISCOVERED WHICH IS ONE SQUARE FOOT OR LARGER IN TOTAL AREA, BLOWS AIR FROM WITHIN THE SUBSTRATE, AND/OR CONSISTENTLY RECEIVES WATER DURING ANY RAIN EVENT. AT THIS TIME, IT IS THE RESPONSIBILITY OF THE PROJECT MANAGER TO IMMEDIATELY CONTACT THE GENERAL PERMIT PROGRAM REPRESENTATIVE FOR FURTHER INVESTIGATION.

9. FIELD REVISIONS TO THE EROSION/SEDIMENTATION CONTROL PLAN MAY BE REQUIRED BY THE GENERAL PERMIT PROGRAM REPRESENTATIVE DURING THE COURSE OF CONSTRUCTION TO CORRECT CONTROL INADEQUACIES. ANY REVISIONS TO THE PERMITTED PLAN MUST BE APPROVED BY THE GENERAL PERMIT PROGRAM OFFICE OF THE PLANNING AND DEVELOPMENT REVIEW DEPARTMENT.

PERMANENT EROSION/SEDIMENTATION CONTROL: ALL DISTURBED AREAS SHALL BE RESTORED IN ACCORDANCE WITH THE CONTRACT DOCUMENTS. WHERE THE CRITERIA MANUAL AND CONTRACT DOCUMENTS DIFFER THE MOST ENVIRONMENTALLY BENEFICIAL MATERIALS/METHOD SHALL BE REQUIRED UNLESS OTHERWISE APPROVED BY THE ENVIRONMENTAL INSPECTOR.

10. DEVELOPER INFORMATION:

OWNER:

COMPANY: CITY OF AUSTIN - AUSTIN WATER
CONTACT: STEVE PARKS, P.E.
ADDRESS: 505 BARTON SPRINGS ROAD
AUSTIN, TEXAS 78704
PHONE: 512-974-3576
FAX: -

OWNER'S REPRESENTATIVE RESPONSIBLE FOR PLAN ALTERATIONS:

COMPANY: CAS CONSULTING & SERVICES, INC.
CONTACT: ANDREW M. ROOKE, P.E.
ADDRESS: 7908 CAMERON ROAD
AUSTIN, TEXAS 78754
PHONE: (512) 836-2388
FAX: (512) 836-4515

PARTY RESPONSIBLE FOR EROSION/SEDIMENTATION CONTROL MAINTENANCE:

COMPANY: CONTRACTOR

PARTY RESPONSIBLE FOR TREE/NATURAL AREA PROTECTION MAINTENANCE:

COMPANY: CONTRACTOR

11. THE CONTRACTOR SHALL NOT DISPOSE OF SURPLUS EXCAVATED MATERIAL FROM THE SITE WITHOUT NOTIFYING THE ENVIRONMENTAL INSPECTOR, AT 974-2278, AT LEAST 48 HOURS PRIOR TO THE SPOILS REMOVAL. THIS NOTIFICATION SHALL INCLUDE THE DISPOSAL LOCATION AND A COPY OF THE PERMIT ISSUED TO RECEIVE THE MATERIAL.

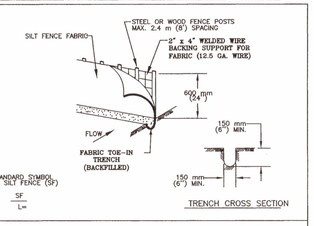

1. STEEL OR WOOD POSTS WHICH SUPPORT THE SILT FENCE SHALL BE INSTALLED ON A SLIGHT ANGLE TOWARD THE ANTICIPATED RUNOFF SOURCE. POST MUST BE EMBEDDED A MINIMUM OF 300 mm (12 INCHES). IF WOOD POSTS CANNOT ACHIEVE 300 mm (12 inches) DEPTH, USE STEEL POSTS.

2. THE TOE OF THE SILT FENCE SHALL BE TRENCHED IN WITH A SPADE OR MECHANICAL TRENCHER, SO THAT THE DOWNSLOPE FACE OF THE TRENCH IS FLAT AND PERPENDICULAR TO THE LINE OF FLOW.

3. THE TRENCH MUST BE A MINIMUM OF 150 mm (6 inches) DEEP AND 150 mm (6 inches) WIDE TO ALLOW FOR THE SILT FENCE FABRIC TO BE LAID IN THE GROUND AND BACKFILLED WITH COMPACTED MATERIAL.

4. SILT FENCE FABRIC SHOULD BE SECURELY FASTENED TO EACH STEEL OR WOOD SUPPORT POST OR TO WOVEN WIRE , WHICH IS IN TURN ATTACHED TO THE STEEL OR WOOD FENCE POST.

5. INSPECTION SHALL BE MADE WEEKLY OR AFTER EACH RAINFALL EVENT AND REPAIR OR REPLACEMENT SHALL BE MADE PROMPTLY AS NEEDED.

6. SILT FENCE SHALL BE REMOVED WHEN THE SITE IS COMPLETELY STABILIZED SO AS NOT TO BLOCK OR IMPEDE STORM FLOW OR DRAINAGE.

7. ACCUMULATED SILT SHALL BE REMOVED WHEN IT REACHES A DEPTH OF 150 mm (6 inches). THE SILT SHALL BE DISPOSED OF ON AN APPROVED SITE AND IN SUCH A MANNER THAT WILL NOT CONTRIBUTE TO ADDITIONAL SILTATION.

CITY OF AUSTIN WATERSHED PROTECTION DEPARTMENT		SILT FENCE	
RECORD COPY SIGNED BY MORGAN BYARS	09/01/2011 ADOPTED	THE ARCHITECT/ENGINEER ASSUMES RESPONSIBILITY FOR APPROPRIATE USE OF THIS STANDARD.	STANDARD NO. 642S-1

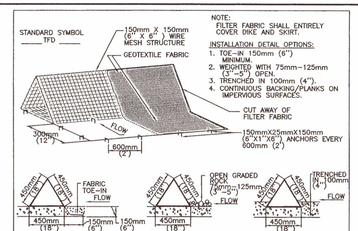

NOTE:
FILTER FABRIC SHALL ENTIRELY COVER DIKE AND SKIRT.

INSTALLATION DETAIL OPTIONS:
1. TOE-IN 150mm (6") MINIMUM.
2. WEIGHTED WITH 75mm-125mm (3"-5") OPEN.
3. TRENCHED IN 100mm (4").
4. CONTINUOUS BACKING/PLANKS ON IMPERVIOUS SURFACES.

GENERAL NOTES
1. DIKES SHALL BE PLACED IN A ROW WITH ENDS TIGHTLY ABUTTING THE ADJACENT DIKE.
2. THE FABRIC COVER AND SKIRT SHALL BE A CONTINUOUS WRAPPING OF GEOTEXTILE. THE SKIRT SHALL BE A CONTINUOUS EXTENSION OF THE FABRIC ON THE UPSTREAM FACE.
3. THE SKIRT SHALL BE WEIGHTED WITH A CONTINUOUS LAYER OF 75-125mm (3-5") OPEN GRADED ROCK OR TOED-IN 150mm (6") WITH MECHANICALLY COMPACTED MATERIAL. OTHERWISE, THE ENTIRE STRUCTURE SHALL BE TRENCHED IN 100mm (4").
4. DIKES AND SKIRT SHALL BE SECURELY ANCHORED IN PLACE USING 150mm (6") WIRE STAPLES ON 600mm (2') CENTERS ON BOTH EDGES AND SKIRT, OR STAKE USING 10M (3/8 ") DIAMETER RE-BAR WITH TEE ENDS.
5. FILTER MATERIAL SHALL BE LAPPED OVER ENDS 150mm (6") TO COVER DIKE TO DIKE JOINTS. JOINTS SHALL BE FASTENED WITH GALVANIZED SHOAT RINGS.
6. THE DIKE STRUCTURE SHALL BE MW40-150mmX150mm (6 GA. 6"X6") WIRE MESH, 450mm (18") ON A SIDE.
7. INSPECTION SHALL BE MADE WEEKLY OR AFTER EACH RAINFALL EVENT AND REPAIR OR REPLACEMENT SHALL BE MADE PROMPTLY AS NEEDED BY THE CONTRACTOR.
8. ACCUMULATED SILT SHALL BE REMOVED WHEN IT REACHES A DEPTH OF 150mm (6") AND DISPOSED OF IN A MANNER WHICH WILL NOT CAUSE ADDITIONAL SILTATION.
9. AFTER THE DEVELOPMENT SITE IS COMPLETELY STABILIZED, THE DIKES AND ANY REMAINING SILT SHALL BE REMOVED. SILT SHALL BE DISPOSED OF AS INDICATED IN GENERAL NOTE 8 ABOVE.

CITY OF AUSTIN WATERSHED PROTECTION DEPARTMENT		TRIANGULAR SEDIMENT FILTER DIKE	
RECORD COPY SIGNED BY J. PATRICK MURPHY	3/27/00 ADOPTED	THE ARCHITECT/ENGINEER ASSUMES RESPONSIBILITY FOR APPROPRIATE USE OF THIS STANDARD.	STANDARD NO. 628S

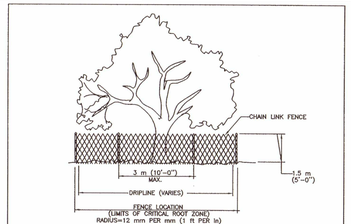

CITY OF AUSTIN WATERSHED PROTECTION DEPARTMENT		TREE PROPTECTION FENCE TYPE A – CHAIN LINK	
RECORD COPY SIGNED BY J. PATRICK MURPHY	11/15/99 ADOPTED	THE ARCHITECT/ENGINEER ASSUMES RESPONSIBILITY FOR APPROPRIATE USE OF THIS STANDARD.	STANDARD NO. 610S-2

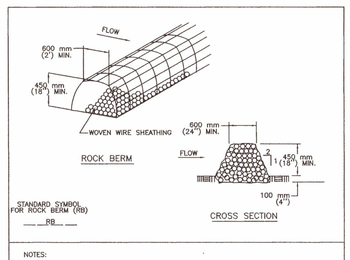

NOTES:
1. USE ONLY OPEN GRADED ROCK 75 to 125 mm (3 to 5") DIAMETER FOR ALL CONDITIONS.
2. THE ROCK BERM SHALL BE SECURED WITH A WOVEN WIRE SHEATHING HAVING MAXIMUM 25 mm (1") OPENING AND MINIMUM WIRE DIAMETER OF 12.9 mm (20 GAUGE).
3. THE ROCK BERM SHALL BE INSPECTED DAILY OR AFTER EACH RAIN, AND THE STONE AND/OR FABRIC CORE-WOVEN SHEATHING SHALL BE REPLACED WHEN THE STRUCTURE CEASES TO FUNCTION AS INTENDED, DUE TO SEDIMENT ACCUMULATION AMONG THE ROCKS, WASHOUT, CONSTRUCTION TRAFFIC DAMAGE, ETC.
4. IF SEDIMENT REACHES A DEPTH EQUAL TO ONE-THIRD THE HEIGHT OF THE BERM OR 150 mm (6"), WHICHEVER IS LESS, THE SEDIMENT SHALL BE REMOVED AND DISPOSED OF ON AN APPROVED SITE AND IN A MANNER THAT WILL NOT CREATE A SEDIMENTION PROBLEM.
5. WHEN THE SITE IS COMPLETELY STABILIZED,THE BERM AND ACCUMULATED SEDIMENT SHALL BE REMOVED AND DISPOSED OF IN AN APPROVED MANNER.

CITY OF AUSTIN WATERSHED PROTECTION DEPARTMENT		ROCK BERM	
RECORD COPY SIGNED BY MORGAN BYARS	8/24/2010 ADOPTED	THE ARCHITECT/ENGINEER ASSUMES RESPONSIBILITY FOR APPROPRIATE USE OF THIS STANDARD.	STANDARD NO. 639S-1

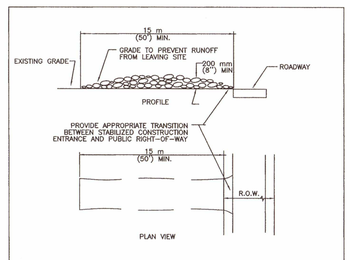

NOTES:
1. STONE SIZE: 75-125 mm (3-5") OPEN GRADED ROCK.
2. LENGTH: AS EFFECTIVE BUT NOT LESS THAN 15 m (50').
3. THICKNESS: NOT LESS THAN 200 mm (8").
4. WIDTH: NOT LESS THAN FULL WIDTH OF ALL POINTS OF INGRESS/EGRESS.
5. WASHING: WHEN NECESSARY, VEHICLE WHEELS SHALL BE CLEANED TO REMOVE SEDIMENT PRIOR TO ENTRANCE ONTO PUBLIC ROADWAY. WHEN WASHING IS REQUIRED, IT SHALL BE DONE ON AN AREA STABILIZED WITH CRUSHED STONE AND DRAINS INTO AN APPROVED TRAP OR SEDIMENT BASIN. ALL SEDIMENT SHALL BE PREVENTED FROM ENTERING ANY STORM DRAIN, DITCH OR WATERCOURSE USING APPROVED METHODS.
6. MAINTENANCE: THE ENTRANCE SHALL BE MAINTAINED IN A CONDITION THAT WILL PREVENT TRACKING OR FLOWING OF SEDIMENT ONTO PUBLIC ROADWAY. THIS MAY REQUIRE PERIODIC TOP DRESSING WITH ADDITIONAL STONE AS CONDITIONS DEMAND, AS WELL AS REPAIR AND CLEAN OUT OF ANY MEASURE DEVICES USED TO TRAP SEDIMENT. ALL SEDIMENTS THAT IS SPILLED, DROPPED, WASHED OR TRACKED ONTO PUBLIC ROADWAY MUST BE REMOVED IMMEDIATELY.
7. DRAINAGE: ENTRANCE MUST BE PROPERLY GRADED OR INCORPORATE A DRAINAGE SWALE TO PREVENT RUNOFF FROM LEAVING THE CONSTRUCTION SITE.

CITY OF AUSTIN WATERSHED PROTECTION DEPARTMENT		STABILIZED CONSTRUCTION ENTRANCE	
RECORD COPY SIGNED BY J. PATRICK MURPHY	5/23/00 ADOPTED	THE ARCHITECT/ENGINEER ASSUMES RESPONSIBILITY FOR APPROPRIATE USE OF THIS STANDARD.	STANDARD NO. 641S-1

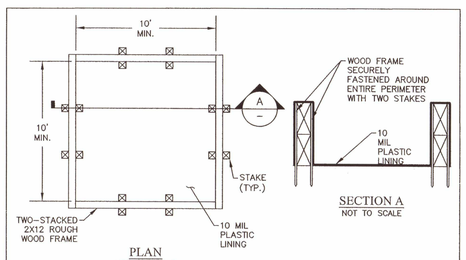

SECTION A
NOT TO SCALE

PLAN
NOT TO SCALE

NOTES:
1. ACTUAL LAYOUT DETERMINED IN FIELD.
2. INSTALL CONCRETE WASHOUT SIGN WITHIN 30 FT. OF THE TEMPORARY CONCRETE WASHOUT FACILITY.
3. IN LIEU OF DESIGN SHOWN ABOVE, CONTRACTOR MAY SUBSTITUTE PREFABRICATED DESIGN OR OTHER FABRICATED ON-SITE DESIGN PROVIDED HE/SHE SUBMITS SKETCH TO ENVIRONMENTAL INSPECTOR FOR APPROVAL.
4. CONTRACTOR SHALL SUBMIT MAINTENANCE PLAN TO ENVIRONMENTAL INSPECTOR FOR APPROVAL. PLAN SHALL INCLUDE ANTICIPATED NUMBER OF CONCRETE TRUCKS PER DAY, CLEANING SCHEDULE, DISPOSAL PLAN FOR SOLIDS AND LIQUIDS, AND FREQUENCY OF INSPECTION.
5. CONTRACTOR SHALL IMMEDIATELY REPAIR LINER IF LEAKAGE IS OBSERVED.

CONCRETE WASHOUT AREA

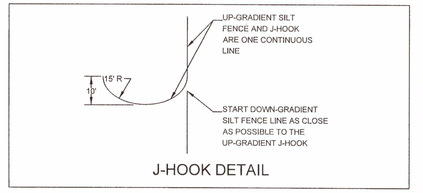

J-HOOK DETAIL

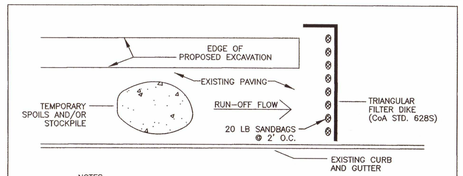

NOTES:
1. THE TEMPORARY SPOILS/STOCKPILE STORAGE AREA AND STAGING AREA MAY BE LOCATED DIRECTLY ADJACENT TO THE EXCAVATION AND ON THE PAVEMENT.
2. ANY SPOIL NOT INTENDED TO BE REUSED WILL BE HAULED TO AN APPROVED OR PERMITTED DISPOSAL SITE DAILY.
3. INSTALL TRIANGULAR SEDIMENT FILTER DIKE (DETAIL 682S) ACROSS FULL WIDTH OF TRAFFIC CLOSURE AND DOWNSTREAM OF CONSTRUCTION AREA, PERPENDICULAR TO CURB AND PLACED TO EFFECTIVELY CATCH AND CONTAIN SEDIMENT LADEN RUNOFF FROM THE EXCAVATED AREA. FILTER DIKE TO FOLLOW ACTIVE CONSTRUCTION. REMOVING AND RE-SETTING FILTER DIKE IS CONSIDERED SUBSIDIARY TO BARRICADES AND TRAFFIC HANDLING.

ADDITIONAL EROSION/SEDIMENTATION CONTROL FOR WORK IN PAVED AREAS

CITY OF AUSTIN

GENERAL PERMIT OFFICE
EROSION/SEDIMENTATION CONTROL
CITY OF AUSTIN STANDARD NOTES AND DETAILS

REVISIONS

NO.	BY	DATE	REMARKS

SHEET INFORMATION
DATE FEB 2017
SHEET S-C-03 OF X
CAD REF. NO.

SITE PLAN APPROVAL SHEET 41 OF 46
FILE NUMBER: SP-2015-0189C APPLICATION DATE: 04/06/2018
APPROVED BY COMMISSION ON _____ UNDER SECTION 112
OF CHAPTER 25-5 OF THE CITY OF AUSTIN CODE.
EXPIRATION DATE(25-5-81, LDC) 2/3/22
CASE MANAGER CHRISTINE BARTON-HOLMES
PROJECT EXPIRATION DATE (ORD. 970905-A) _____
DWPZ DDZ
DIRECTOR, DEVELOPMENT SERVICES DEPARTMENT
RELEASED FOR GENERAL COMPLIANCE: 2/3/19 ZONING P
Rev. 1 _____ Correction 1 _____
Rev. 2 _____ Correction 2 _____
Rev. 3 _____ Correction 3 _____
Final Plat must be recorded by the Project Expiration Date, if applicable. Subsequent Site Plans which do not comply with the Code current at the time of filing, and all required Building Permits and/or a notice of construction (if a building permit is not required), must also be approved prior to the Project Expiration Date.

Development Services Department
Jan 17, 2019

BAR LENGTH ON ORIGINAL DRAWING EQUALS ONE INCH, ADJUST SCALE ACCORDINGLY.

CAS CONSULTING & SERVICES, INC. ENGINEERING MANAGEMENT
CIVIL ENGINEERING | PROGRAM MANAGEMENT | CONSTRUCTION MANAGEMENT
7908 Cameron Road | Austin, TX 78754 |REG. NO. F-003572
Main: 512.836.2388 | Fax: 512.836.4515

STATE OF TEXAS
ANDREW M. ROOKE
66364
LICENSED PROFESSIONAL ENGINEER
5/28/2019

NO.	DATE:	DESCRIPTION

HARUTUNIAN ENGINEERING INCORPORATED
TEXAS FIRM REGISTRATION NUMBER F-2408
ENGINEERING AND ENVIRONMENTAL CONSULTANTS
305 EAST HUNTLAND DRIVE SUITE 500
AUSTIN, TEXAS 78752

REUSE OF DOCUMENTS
This document, and the designs incorporated herein, is an instrument of professional service that has been developed, designed and prepared by Harutunian Engineering, Inc., and is not to be used, in whole or in part, for any other project without giving written notice to Harutunian Engineering, Inc.

DESIGNED BY:	CAS
CHECKED BY:	LR
APPROVED BY:	AMR
SUBMITTAL DATE:	MAY 2019
SCALE:	

SOUTH AUSTIN REGIONAL WASTEWATER TREATMENT PLANT
ELECTRICAL SUBSTATION NO. 1 REPLACEMENT PROJECT
CIP I.D.# 3333.032

EROSION AND SEDIMENTATION DETAILS

PROJECT NO: 2014-300 SHT. 41 OF 46 DWG NO. TD-C-005A

GENERAL PERMIT PROGRAM (GPP) STANDARD ENVIRONMENTAL NOTES:

ADDITIONAL AREAS:

ANY ADDITIONAL AREAS REQUIRED FOR CONSTRUCTION OF THIS PROJECT SHALL BE THE SOLE RESPONSIBILITY OF THE CONTRACTOR. CONTRACTOR MUST SECURE CITY OF AUSTIN APPROVAL OF PROPOSED ADDITIONAL AREAS PRIOR TO USE. APPROVAL OF "CORRECTION REQUEST" MUST BE SECURED FROM THE GENERAL PERMIT PROGRAM OFFICE OF THE PLANNING AND DEVELOPMENT REVIEW DEPARTMENT.

ALL ASSOCIATED PERMITS AND FEES SHALL BE THE SOLE RESPONSIBILITY OF THE CONTRACTOR.

IN ORDER TO SECURE APPROVAL FOR USE OF ADDITIONAL AREAS, CONTRACTOR MUST PROVIDE COMPLETE "CORRECTION REQUEST" SUBMITTAL TO GENERAL PERMIT PROGRAM OFFICE AND ALLOW A ONE WEEK COMMENT PERIOD FOR EACH REVIEW. CONTRACTOR SHOULD REQUEST INFORMATION ON THE ELEMENTS REQUIRED TO BE INCLUDED IN THE SUBMITTAL FROM THE OWNER'S REPRESENTATIVE OR THE GENERAL PERMIT PROGRAM OFFICE.

CONTRACTOR MUST INSTALL AND MAINTAIN EROSION/SEDIMENTATION CONTROLS AND TREE PROTECTION FOR ALL SUCH AREAS IN ACCORDANCE WITH THE CITY OF AUSTIN ENVIRONMENTAL CRITERIA MANUAL AND AS INCLUDED IN THE APPROVED SUBMITTAL OR DIRECTED IN THE FIELD BY THE GENERAL PERMIT PROGRAM REPRESENTATIVE.

A SIGNED COPY OF THE PLANS PERMITTED THROUGH THE GENERAL PERMIT PROGRAM MUST BE KEPT ON SITE AND ACCESSIBLE AT ALL TIMES DURING PROJECT CONSTRUCTION.

DEWATERING:

CONTRACTOR IS RESPONSIBLE FOR DEWATERING OF WORK AREA. CONTRACTOR MUST SECURE CITY OF AUSTIN APPROVAL OF PROPOSED DEWATERING PROCEDURES PRIOR TO INSTALLATION OR USE. APPROVAL MUST BE SECURED FROM THE GENERAL PERMIT PROGRAM (GPP) OFFICE OF THE PLANNING AND DEVELOPMENT REVIEW DEPARTMENT. CONTRACTOR MUST PROVIDE COMPLETE SUBMITTAL TO GPP OFFICE AND ALLOW AN ONE WEEK (MIN.) COMMENT PERIOD FOR EACH REVIEW. CONTACT THE GPP OFFICE FOR SUBMITTAL REQUIREMENTS.

FUEL STORAGE:

FUEL STORAGE IS PROHIBITED ON THIS PROJECT. ADDITIONALLY, THE CONTRACTOR IS REQUIRED TO NOTIFY THE GENERAL PERMIT PROGRAM OFFICE IMMEDIATELY FOLLOWING ANY SPILL OF FUEL OR OTHER TOXIC MATERIAL. CONTRACTOR IS REQUIRED TO FOLLOW-UP WITH WRITTEN DOCUMENTATION, INCLUDING A COMPLETE DESCRIPTION OF THE INCIDENT, MATERIAL SPILLED, AND ACTIONS TAKEN TO CONTAIN AND CLEAN-UP MATERIAL.

FUGITIVE DUST CONTROL:

ALL PROJECTS APPROVED THROUGH THE GENERAL PERMIT PROGRAM (GPP) MUST COMPLY WITH THE CODE OF THE CITY OF AUSTIN AND THE ENVIRONMENTAL CRITERIA MANUAL REQUIREMENTS TO CONTROL AIRBORNE DUST. COMPLIANCE IS REQUIRED FOR ENTIRE PROJECT SITE AS WELL AS ASSOCIATED OPERATIONS. CONTACT THE GPP OFFICE FOR RECOMMENDED CONTROL METHODS.

SPOILS STORAGE:

NO SPOILS STORAGE IS ALLOWED WITHIN A CRITICAL WATER QUALITY ZONE, A 100-YEAR FLOODPLAIN, OR ON A SLOPE WITH A GRADIENT OF MORE THAN 15 PERCENT.

E/S CONTROLS FOR BORE / RECEIVING PIT LOCATIONS:

TEMPORARY E/S CONTROLS MUST SURROUND THE ENTIRETY OF BORING OPERATIONS, INCLUDING PIT, EQUIPMENT, ETC. FOR LOCATIONS WITHIN IMPERVIOUS AREAS, TEMPORARY CONTROL WILL BE TRIANGULAR FILTER DIKE (COA STANDARD DETAIL #628S). DIKE FLAP WILL BE CONTINUOUSLY WEIGHTED DOWN THROUGH THE USE OF 1" BY 4" WOOD STRIPS NAILED TO THE PAVEMENT, EXCEPT FOR THE ACCESS POINT. PLACEMENT OF TEMPORARY E/S CONTROLS ACROSS ACCESS POINT WILL BE REQUIRED WHENEVER THE SITE IS NOT ACTIVELY USED. FOR LOCATIONS WITHIN PERVIOUS AREAS, TEMPORARY CONTROL WILL BE SILT FENCE (COA STANDARD DETAIL #642S-1) OR MULCH SOCKS (MULCH SOCKS DETAIL ON SHEET C-004) AS INDICATED ON APPROVED PLANS.

SOIL RETENTION BLANKET:

UNLESS OTHERWISE INDICATED IN THE PROJECT DOCUMENTS, INSTALLATION OF SOIL RETENTION BLANKET WILL BE REQUIRED FOR ALL IMPACTED SLOPES GREATER THAN 3:1 AND ALL IMPACTED AREAS WITHIN DRAINAGE CONVEYANCES. (CITY OF AUSTIN STANDARD SPECIFICATION ITEM 609S) SOIL RETENTION BLANKET SUBMITTAL MUST BE APPROVED BY PROJECT ENGINEER AND GENERAL PERMIT PROGRAM (GPP) REPRESENTATIVE PRIOR TO USE AND MUST INCLUDE PRODUCT AND INSTALLATION DETAILS PROVIDED BY MANUFACTURER. FINISH GRADING MUST BE INSPECTED AND APPROVED BY GPP INSPECTOR PRIOR TO BLANKET INSTALLATION. INSTALLATION MUST BE IN ACCORDANCE WITH MANUFACTURER'S RECOMMENDATIONS AND MUST BE INSPECTED AND APPROVED BY GPP REPRESENTATIVE PRIOR TO ACCEPTANCE.

SOD INSTALLATION:

REVEGETATION WITHIN MANAGED TURF AREAS MUST BE ACCOMPLISHED THROUGH THE INSTALLATION OF SOLID BLOCK GRASS SOD. SOD TYPE MUST MATCH ADJACENT GRASS TYPE. QUESTIONS REGARDING SOD TYPE WILL BE RESOLVED BY THE GENERAL PROGRAM PERMIT REPRESENTATIVE. REFER TO CITY OF AUSTIN STANDARD SPECIFICATION ITEM NO. 602S: SODDING FOR EROSION CONTROL, UNLESS OTHERWISE NOTED ON THE APPROVED PLANS.

TxDOT RIGHTS-OF-WAY:

TOPSOIL (TxDOT ITEM NO. 160), SOIL RETENTION BLANKET (TxDOT ITEM NO. 169), AND REVEGETATION (TxDOT ITEM NO. 164) INSTALLED WITHIN TEXAS DEPARTMENT OF TRANSPORTATION (TxDOT) RIGHT-OF-WAY SHALL COMPLY WITH "REQUIREMENTS FOR INSTALLATION OF UTILITIES WITHIN THE STATE RIGHT-OF-WAY, AUSTIN DISTRICT".

PROJECT SEQUENCE:
(REFER TO FULL PLAN SET FOR PROJECT-SPECIFIC ADDITIONS, IF APPLICABLE.)

PRIOR TO CONSTRUCTION:

1. SECURE APPLICABLE COA PERMITS, INCLUDING APPROVAL UNDER GENERAL PERMIT AND UTILITY STREET CUT PERMIT.
2. NOTIFY GENERAL PERMIT PROGRAM REPRESENTATIVE PRIOR TO PLACEMENT OF E/S CONTROLS AND TREE PROTECTION FENCING. ALL PROPOSED PHASING OF CONTROLS MUST BE SUBMITTED TO AND APPROVED BY THE GENERAL PERMIT PROGRAM REPRESENTATIVE PRIOR TO THE FIELD PRE-CONSTRUCTION CONFERENCE.
3. NOTIFY COA TEMPORARY TRAFFIC CONTROL REPRESENTATIVE PRIOR TO PLACEMENT OF TEMPORARY TRAFFIC CONTROLS. ALL PROPOSED PHASING OF CONTROLS MUST BE INDICATED ON APPROVED TEMPORARY TRAFFIC CONTROL PLAN AND SEALED BY PROFESSIONAL ENGINEER.
4. PLACE TEMPORARY E/S CONTROLS AND TREE PROTECTION FENCING PRIOR TO BEGINNING ANY EXCAVATION. INSTALL C.I.P. SIGN, IF APPLICABLE.
5. HOLD ENVIRONMENTAL PRE-CONSTRUCTION CONFERENCE ON SITE WITH THE CONTRACTOR, OWNER'S REPRESENTATIVE, AND GENERAL PERMIT PROGRAM REPRESENTATIVE AFTER INSTALLATION OF E/S CONTROLS AND TREE PROTECTION FENCING AND PRIOR TO ANY TRENCHING OPERATIONS.
6. PLACE TEMPORARY TRAFFIC CONTROL DEVICES.

PROJECT CONSTRUCTION:

1. BEGIN CONSTRUCTION. NOTIFY GENERAL PERMIT PROGRAM REPRESENTATIVE A MINIMUM OF 48 HOURS IN ADVANCE OF TRANSITION BETWEEN PHASES.
2. CONTACT GENERAL PERMIT OFFICE TO SCHEDULE FIELD INSPECTION PRIOR TO BEGINNING INSTALLATION OF PERMANENT E/S CONTROLS.
3. COMPLETE RESTORATION OF ALL AREAS DISTURBED BY CONSTRUCTION ACTIVITIES FOR THIS PROJECT. (PERMANENT E/S CONTROLS)
4. REMOVE TEMPORARY TRAFFIC CONTROL DEVICES RELATED TO WORK AREAS OUTSIDE OF THE STREET.
5. HOLD ENVIRONMENTAL POST-CONSTRUCTION CONFERENCE ON SITE WITH THE CONTRACTOR, OWNER'S REPRESENTATIVE, AND GENERAL PERMIT PROGRAM REPRESENTATIVE. ALL PERMANENT E/S CONTROLS MUST BE ACCEPTED BY THE GENERAL PERMIT PROGRAM REPRESENTATIVE. PERMANENT CONTROLS SHALL CONSIST OF REVEGETATION PER DETAILS 602, 604S, AND 609S AS INDICATED ON APPROVED PLANS.
6. FOLLOWING FINAL ACCEPTANCE OF PERMANENT E/S CONTROLS BY THE GENERAL PERMIT PROGRAM REPRESENTATIVE, REMOVE TEMPORARY E/S CONTROLS. CLEAN EXISTING STORM DRAINAGE SYSTEMS AS NECESSARY DUE TO CONSTRUCTION OPERATIONS.
7. DRESS-UP AND RESTORE ANY AREAS DISTURBED BY REMOVAL OF TEMPORARY E/S CONTROLS DESCRIBED ABOVE.

REQUIRED SUBMITTALS:

SUBMITTALS REQUIRED TO BE APPROVED BY GENERAL PERMIT PROGRAM REPRESENTATIVE INCLUDE: SUBMITTALS TRIGGERED BY CITY OF AUSTIN SERIES 600 SPECIFICATIONS AND RELATED SPECIAL PROVISIONS/SPECIFICATIONS, CONSTRUCTION SCHEDULE, TREE PROTECTION, P-6 AND OTHER ROOT ZONE PROTECTION/MITIGATION MEASURES, DEWATERING PLAN, WATERING SCHEDULE FOR REVEGETATION AREAS, AND ANY VEGETATIVE REPLACEMENT PROPOSALS, IF NOT ALREADY PART OF THE PERMITTED PLAN SET.

CITY OF AUSTIN - STANDARD NOTES TREE AND NATURAL AREA PROTECTION (MODIFIED FOR USE ON GENERAL PERMIT PROJECTS)

1. ALL TREES AND NATURAL AREAS SHOWN ON PLAN TO BE PRESERVED SHALL BE PROTECTED DURING CONSTRUCTION WITH TEMPORARY MEASURES.
2. PROTECTIVE MEASURES SHALL BE INSTALLED ACCORDING TO CITY OF AUSTIN STANDARDS FOR TREE PROTECTION.
3. PROTECTIVE MEASURES SHALL BE INSTALLED PRIOR TO THE START OF ANY SITE PREPARATION WORK (CLEARING, GRUBBING OR GRADING), AND SHALL BE MAINTAINED THROUGHOUT ALL PHASES OF THE PROJECT.
4. EROSION AND SEDIMENTATION CONTROL MEASURES SHALL BE INSTALLED OR MAINTAINED IN A MANNER WHICH DOES NOT RESULT IN SOIL BUILD-UP, COMPACTION OR CUTTING OF CRITICAL ROOT ZONE WITHIN TREE DRIP LINES.
5. TREE PROTECTION SHALL COMPLETELY SURROUND THE TREES OR GROUP OF TREES AND WILL BE LOCATED AT THE OUTERMOST LIMIT OF BRANCHES (DRIP LINE). FOR NATURAL AREAS, PROTECTIVE MEASURES SHALL FOLLOW THE LIMIT OF CONSTRUCTION LINE, IN ORDER TO PREVENT THE FOLLOWING:
   A. SOIL COMPACTION IN THE ROOT ZONE AREA RESULTING FROM VEHICULAR TRAFFIC OR STORAGE OF EQUIPMENT OR MATERIALS;
   B. ROOT ZONE DISTURBANCES DUE TO GRADE CHANGES (GREATER THAN 6 INCHES CUT OR FILL) OR TRENCHING NOT REVIEWED AND AUTHORIZED BY THE GENERAL PERMIT PROGRAM OFFICE OF THE PLANNING AND DEVELOPMENT REVIEW DEPARTMENT;
   C. WOUNDS TO EXPOSED ROOTS, TRUNK OR LIMBS BY MECHANICAL EQUIPMENT;
   D. OTHER ACTIVITIES DETRIMENTAL TO TREES SUCH AS CHEMICAL STORAGE, CEMENT TRUCK CLEANING, AND FIRES.
6. EXCEPTIONS TO INSTALLING PROTECTIVE FENCES AT CRITICAL ROOT ZONES MAY BE PERMITTED IN THE FOLLOWING CASES:
   A. WHERE THERE IS TO BE AN APPROVED GRADE CHANGE, IMPERMEABLE PAVING SURFACE, TREE WELL, OR OTHER SUCH SITE DEVELOPMENT, ERECT THE FENCE APPROXIMATELY 2 FEET BEYOND THE AREA DISTURBED;
   B. WHERE PERMEABLE PAVING IS TO BE INSTALLED, ERECT THE FENCE AT THE OUTER LIMITS OF THE PERMEABLE PAVING AREA
   C. WHERE TREES ARE CLOSE TO PROPOSED BUILDINGS, ERECT THE FENCE NO CLOSER THAN 6 FEET TO THE BUILDING
   D. WHERE THERE ARE SEVERE SPACE CONSTRAINTS DUE TO TRACT SIZE, OR OTHER SPECIAL REQUIREMENTS, CONTACT THE GENERAL PERMIT PROGRAM OFFICE AT 974-6330 TO DISCUSS ALTERNATIVES.

SPECIAL NOTE: FOR THE PROTECTION OF NATURAL AREAS, NO EXCEPTIONS TO INSTALLING FENCES AT THE LIMIT OF CONSTRUCTION LINE WILL BE PERMITTED.

WHERE ANY OF THE ABOVE EXCEPTIONS RESULT IN A FENCE 5 FEET OR CLOSER TO A TREE TRUNK, PROTECT THE TRUNK WITH STRAPPED-ON PLANKING TO A HEIGHT OF 8 FEET (OR TO THE LIMITS OF LOWER BRANCHING) IN ADDITION TO THE REDUCED FENCING.

7. WHERE ANY OF THE ABOVE EXCEPTIONS RESULT IN AREAS OF UNPROTECTED ROOT ZONES, THOSE AREAS SHOULD BE COVERED WITH 12 INCHES OF ORGANIC MULCH TO MINIMIZE SOIL COMPACTION DURING CONSTRUCTION. FILTER FABRIC UNDERLAYMENT MAY BE REQUIRED AT DIRECTION OF GENERAL PERMIT PROGRAM REPRESENTATIVE BASED ON SITE CONDITIONS AND CONSTRUCTION ACTIVITIES. MAXIMUM FOUR (4) INCHES DEPTH MAY BE LEFT IN PLACE AFTER CONSTRUCTION WITH APPROVAL FROM THE GENERAL PERMIT PROGRAM REPRESENTATIVE.
8. ALL GRADING WITHIN PROTECTED ROOT ZONE AREAS SHALL BE DONE BY HAND OR WITH SMALL EQUIPMENT TO MINIMIZE ROOT DAMAGE. PRIOR TO GRADING, RELOCATE PROTECTIVE FENCES TO 2 FEET BEHIND THE GRADE CHANGE AREA.
9. ANY ROOTS EXPOSED BY CONSTRUCTION ACTIVITY SHALL BE PRUNED FLUSH WITH THE SOIL. BACKFILL ROOT AREAS WITH GOOD QUALITY TOP SOIL AS SOON AS POSSIBLE. IF EXPOSED ROOT AREAS ARE NOT BACKFILLED WITHIN 2 DAYS, COVER THEM WITH ORGANIC MATERIAL IN A MANNER WHICH REDUCES SOIL TEMPERATURE AND MINIMIZES WATER LOSS DUE TO EVAPORATION.
10. PRIOR TO EXCAVATION OR GRADE CUTTING WITHIN TREE DRIPLINES, MAKE A CLEAN CUT BETWEEN THE DISTURBED AND UNDISTURBED ROOT ZONES WITH A ROCK SAW OR SIMILAR EQUIPMENT TO MINIMIZE DAMAGE TO REMAINING ROOTS.
11. TREES MOST HEAVILY IMPACTED BY CONSTRUCTION ACTIVITIES SHOULD BE WATERED DEEPLY ONCE A WEEK DURING PERIODS OF HOT, DRY WEATHER. TREE CROWNS SHOULD BE SPRAYED WITH WATER PERIODICALLY TO REDUCE DUST ACCUMULATION ON THE LEAVES.
12. ANY TRENCHING REQUIRED FOR THE INSTALLATION OF LANDSCAPE IRRIGATION SHALL BE PLACED AS FAR FROM EXISTING TREE TRUNKS AS POSSIBLE.
13. NO LANDSCAPE TOPSOIL DRESSING GREATER THAN 4 INCHES SHALL BE PERMITTED WITHIN THE DRIPLINE OF TREES. NO SOIL IS PERMITTED ON THE ROOT FLARE OF ANY TREE.
14. PRUNING TO PROVIDE CLEARANCE FOR STRUCTURES, VEHICULAR TRAFFIC AND EQUIPMENT SHALL TAKE PLACE BEFORE CONSTRUCTION BEGINS. SEE NOTE THREE (3) OF SUPPLEMENTAL TREE PROTECTION NOTES FOR ADDITIONAL REQUIREMENTS.
15. ALL FINISHED PRUNING MUST BE DONE ACCORDING TO RECOGNIZED, APPROVED STANDARDS OF THE INDUSTRY (REFERENCE THE NATIONAL ARBORIST ASSOCIATION PRUNING STANDARDS FOR SHADE TREES AVAILABLE ON REQUEST FROM THE GENERAL PERMIT PROGRAM OFFICE).
16. DEVIATIONS FROM THE ABOVE NOTES MAY BE CONSIDERED ORDINANCE VIOLATIONS IF THERE IS SUBSTANTIAL NONCOMPLIANCE OR IF A TREE SUSTAINS DAMAGE AS A RESULT.
17. TREES APPROVED FOR REMOVAL SHALL BE REMOVED IN A MANNER WHICH DOES NOT IMPACT TREES TO BE PRESERVED.

SUPPLEMENTAL TREE PROTECTION NOTES

1. ALL TREE PROTECTION MUST COMPLY WITH CITY OF AUSTIN REQUIREMENTS AS OUTLINED IN THE ENVIRONMENTAL CRITERIA MANUAL AND AS INDICATED BY STANDARD COA NOTES AND DETAILS INCLUDED WITHIN THIS DOCUMENT SET. CONTRACTOR SHALL INSTALL PROTECTION PRIOR TO PRE-CONSTRUCTION CONFERENCE, MAKE ADJUSTMENTS TO PROTECTION AS DIRECTED BY THE GPP REPRESENTATIVE, AND MAINTAIN PROTECTION UNTIL PROJECT IS COMPLETE.
2. TYPE AND LOCATION OF ALL TREE PROTECTION MUST BE APPROVED IN THE FIELD BY THE GENERAL PERMIT PROGRAM (GPP) INSPECTOR PRIOR TO CONSTRUCTION.
3. WALK-THROUGH: CONTRACTOR SHALL CONDUCT WALK-THROUGH MEETING WITH GENERAL PERMIT PROGRAM REPRESENTATIVE PRIOR TO PERFORMING ANY PRUNING ACTIVITIES ON TREES IN PROJECT AREA. PURPOSE OF WALK-THROUGH WILL BE TWOFOLD. ONE PURPOSE WILL BE TO DETERMINE THE MINIMUM AMOUNT OF PRUNING NECESSARY TO ALLOW CONSTRUCTION WORK TO BE COMPLETED. SECOND PURPOSE WILL BE TO DETERMINE AREAS OF PROJECT IN WHICH EXHAUST DIVERTERS WILL BE REQUIRED ON CONSTRUCTION EQUIPMENT TO PREVENT SCORCHING OF EXISTING TREES.
4. ALL PRUNING MUST BE PERFORMED IN ACCORDANCE WITH ANSI A300 (PART 1) - 2001 AMERICAN NATIONAL STANDARD FOR TREE CARE OPERATIONS (PRUNING), OR LATEST APPROVED VERSION. THIS DOCUMENT MAY BE OBTAINED ONLINE FOR A FEE AT WWW.ANSI.ORG.
5. PRUNING SHALL BE DONE WITH CLEAN, SHARP TOOLS. TO PREVENT BARK TEARS, THE WEIGHT OF THE BRANCH SHALL BE REMOVED BEFORE MAKING FINAL PRUNING CUT.
6. ALL PRUNING SHALL PRESERVE THE NATURAL CHARACTER OF THE TREE.
7. ONLY COLLAR CUTS ARE ACCEPTABLE. NO FLUSH CUTS OR STUB CUTS WILL BE ALLOWED.
8. ALL BRANCHES THAT ARE BROKEN OR DAMAGED DURING CONSTRUCTION SHALL BE REMOVED.
9. PRUNING CUTS OR DAMAGED AREAS ON AN OAK TREE SHALL BE PAINTED WITHIN FIVE MINUTES WITH A STANDARD TREE WOUND DRESSING. TREE WOUND DRESSING SHALL BE EITHER TREEKOTE AEROSOL OR TANGLEFOOT PRUNING SEALER (OR APPROVED EQUAL). THIS ALSO APPLIES TO WOUNDS CREATED BY CONSTRUCTION VEHICLES OR EQUIPMENT. ALL PRUNING MUST BE IN ACCORDANCE WITH COA OAK WILT PREVENTION POLICY.
10. ANY TREE ROOTS THAT ARE EXPOSED, CUT, OR TORN DURING CONSTRUCTION ACTIVITY SHALL BE PRUNED FLUSH WITH THE SURROUNDING SOIL. (REFER ALSO TO NUMBER 9 OF THE TREE AND NATURAL AREA PROTECTION NOTES INCLUDED IN THIS PLAN SET.)
11. ALL TRENCHING WITHIN THE CRITICAL ROOT ZONE OF A TREE TO BE PRESERVED WILL BE SAW CUT.

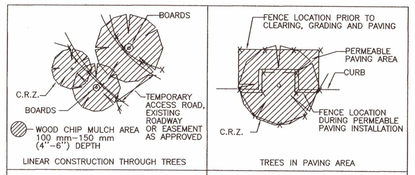

CITY OF AUSTIN WATERSHED PROTECTION DEPARTMENT		TREE PROTECTION FENCE LOCATIONS
RECORD COPY SIGNED BY J. PATRICK MURPHY	11/15/99 ADOPTED	THE ARCHITECT/ENGINEER ASSUMES RESPONSIBILITY FOR APPROPRIATE USE OF THIS STANDARD. STANDARD NO. 610S-1

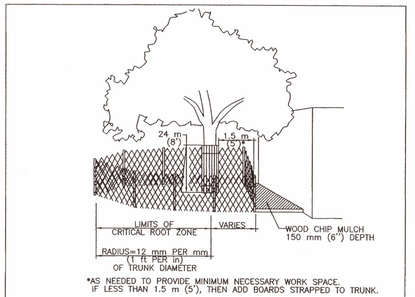

CITY OF AUSTIN WATERSHED PROTECTION DEPARTMENT		TREE PROTECTION FENCE MODIFIED TYPE A - CHAIN LINK
RECORD COPY SIGNED BY J. PATRICK MURPHY	11/15/99 ADOPTED	THE ARCHITECT/ENGINEER ASSUMES RESPONSIBILITY FOR APPROPRIATE USE OF THIS STANDARD. STANDARD NO. 610S-4

URBAN FOREST ACCOUNTING:

TOTAL APPENDIX F TREE INCHES SURVEYED	182
TOTAL APPENDIX F TREE INCHES REMOVED	0
TOTAL NON-APPENDIX F AND INVASIVE REMOVED	0
TOTAL MITIGATION INCHES PLANTED ON SITE	0
TOTAL DEAD INCHES REMOVED	0
TOTAL NON-MITIGATION INCHES PLANTED ON SITE	0

CITY OF AUSTIN WATER & WASTEWATER

GENERAL PERMIT OFFICE
TREE PROTECTION AND ENVIRONMENTAL NOTES
CITY OF AUSTIN STANDARD NOTES AND DETAILS

NO.	DATE	BY	REVISIONS REMARKS

SHEET INFORMATION
DATE JUNE 2019
SHEET 8-C-04 OF X
CAD REF. NO. TP-ENVPROD.WG

SITE PLAN APPROVAL SHEET 42 OF 46
FILE NUMBER SP-2018-0189C APPLICATION DATE: 04/26/2018
APPROVED BY COMMISSION ON _____ UNDER SECTION 112
OF CHAPTER 25-5 OF THE CITY OF AUSTIN CODE.
EXPIRATION DATE(25-5-81, LDC) 7/31/22
CASE MANAGER CHRISTINE BARTON-HOLMES
PROJECT EXPIRATION DATE (ORD., #970905-A)
DWPZ

DIRECTOR, DEVELOPMENT SERVICES DEPARTMENT
RELEASED FOR GENERAL COMPLIANCE 7/31/19 ZONING P
Rev. 1 _____ Correction 1 _____
Rev. 2 _____ Correction 2 _____
Rev. 3 _____ Correction 3 _____
Final Plat must be recorded by the Project Expiration Date, if applicable. Subsequent Site Plans which do not comply with the Code current at the time of filing, and all required Building Permits and/or a notice of construction (if a building permit is not required), must also be approved prior to the Project Expiration Date.

Development Services Department

BAR LENGTH ON ORIGINAL DRAWING EQUALS ONE INCH, ADJUST SCALE ACCORDINGLY.

CAS CONSULTING & SERVICES, INC.
CIVIL ENGINEERING | PROGRAM MANAGEMENT | CONSTRUCTION MANAGEMENT
7908 Cameron Road | Austin, TX 78754 | REG. NO. F-003572
Main: 512.836.2388 | Fax: 512.836.4515

STATE OF TEXAS ANDREW W. ROOKS 66364 LICENSED PROFESSIONAL ENGINEER
5/28/2019

NO.	DATE:	DESCRIPTION

HARUTUNIAN ENGINEERING INCORPORATED
TEXAS FIRM REGISTRATION NUMBER F-2408
ENGINEERING AND ENVIRONMENTAL CONSULTANTS
305 EAST HUNTLAND DRIVE SUITE 500
AUSTIN, TEXAS 78752

REUSE OF DOCUMENTS
This document, and the designs incorporated herein, is an instrument of professional service that has been developed, designed and prepared by Harutunian Engineering, Inc., and is not to be used, in whole or in part, for any other project without giving written notice to Harutunian Engineering, Inc.

DESIGNED BY:	CAS
CHECKED BY:	LR
APPROVED BY:	AMR
SUBMITTAL DATE:	MAY 2019
SCALE:	

SOUTH AUSTIN REGIONAL WASTEWATER TREATMENT PLANT
ELECTRICAL SUBSTATION NO. 1 REPLACEMENT PROJECT
CIP I.D.# 3333.032

TREE PROTECTION DETAILS

PROJECT NO: 2014-300 SHT. 42 OF 46 DWG NO. TD-C-006A

EROSION CONTROL NOTES:

1. The contractor shall install erosion/sedimentation controls, tree/natural area protective fencing, and conduct "Pre-Construction" tree fertilization (if applicable) prior to any site preparation work (clearing, grubbing or excavation).
2. The placement of erosion/sedimentation controls shall be in accordance with the Environmental Criteria Manual and the approved Erosion and Sedimentation Control Plan. The COA ESC Plan shall be consulted and used as the basis for a TPDES required SWPPP. If a SWPPP is required, it shall be available for review by the City of Austin Environmental Inspector at all times during construction, including at the Pre-Construction meeting. The checklist below contains the basic elements that shall be reviewed for permit approval by COA EV Plan Reviewers as well as COA EV Inspectors.

   -- Plan sheets submitted to the City of Austin MUST show the following:

   ✓ Direction of flow during grading operations.

   ✓ Location, description, and calculations for off-site flow diversion structures.

   ✓ Areas that will not be disturbed; natural features to be preserved.

   ✓ Delineation of contributing drainage area to each proposed BMP (e.g., silt fence, sediment basin, etc.).

   ✓ Location and type of E&S BMPs for each phase of disturbance.

   ✓ Calculations for BMPs as required.

   ✓ Location and description of temporary stabilization measures.

   ✓ Location of on-site spoils, description of handling and disposal of borrow materials, and description of on-site permanent spoils disposal areas, including size, depth of fill and revegetation procedures.

   ✓ Describe sequence of construction as it pertains to ESC including the following elements:

1. Installation sequence of controls (e.g. perimeter controls, then sediment basins, then temporary stabilization, then permanent, etc.)
2. Project phasing if required (LOC greater than 25 acres)
3. Sequence of grading operations and notation of temporary stabilization measures to be used
4. Schedule for converting temporary basins to permanent WQ controls
5. Schedule for removal of temporary controls
6. Anticipated maintenance schedule for temporary controls

   -- Categorize each BMP under one of the following areas of BMP activity as described below:

   3.1 Minimize disturbed area and protect natural features and soil

   3.2 Control Stormwater flowing onto and through the project

   3.3 Stabilize Soils

   3.4 Protect Slopes

   3.5 Protect Storm Drain Inlets

   3.6 Establish Perimeter Controls and Sediment Barriers

   3.7 Retain Sediment On-Site and Control Dewatering Practices

   3.8 Establish Stabilized Construction Exits

   3.9 Any Additional BMPs

   -- Note the location of each BMP on your site map(s).

   -- For any structural BMPs, you should provide design specifications and details and refer to them.

   -- For more information, see City of Austin Environmental Criteria Manual 1.4.

3. The Placement of tree/natural area protective fencing shall be in accordance with the City of Austin standard Notes for Tree and Natural Area Protection and the approved Grading/Tree and Natural Area Plan.
4. A pre-construction conference shall be held on-site with the contractor, design Engineer/permit applicant and Environmental Inspector after installation of the erosion/sedimentation controls, tree/natural area protection measures and "Pre-Construction" tree fertilization (if applicable) prior to beginning any site preparation work. The owner or owner's representative shall notify the Development Services Department, 512-974-2278 or by email at environmental.inspections@austintexas.gov, at least three days prior to the meeting date. COA approved ESC Plan and TPDES SWPPP (if required) should be reviewed by COA EV Inspector at this time.
5. Any major variation in materials or locations of controls or fences from those shown on the approved plans will require a revision and must be approved by the reviewing Engineer, Environmental Specialist or City Arborist as appropriate. Major revisions must be approved by authorized COA staff. Minor changes to be made as field revisions to the Erosion and Sedimentation Control Plan may be required by the Environmental Inspector during the course of construction to correct control inadequacies.
6. The contractor is required to provide a certified inspector that is either a licensed engineer (or person directly supervised by the licensed engineer) or Certified Professional in Erosion and Sediment Control (CPESC or CPESC – IT), Certified Erosion, Sediment and Stormwater – Inspector (CESSWI or CESSWI – IT) or Certified Inspector of Sedimentation and Erosion Controls (CISEC or CISEC – IT) certification to inspect the controls and fences at weekly or bi-weekly intervals and after one-half (½) inch or greater rainfall events to insure that they are functioning properly. The person(s) responsible for maintenance of controls and fences shall immediately make any necessary repairs to damaged areas. Silt accumulation at controls must be removed when the depth reaches six (6) inches or one-third (⅓) of the installed height of the control whichever is less.
7. Prior to final acceptance by the City, haul roads and waterway crossings constructed for temporary contractor access must be removed, accumulated sediment removed from the waterway and the area restored to the original grade and revegetated. All land clearing debris shall be disposed of in approved spoil disposal sites.
8. All work must stop if a void in the rock substrate is discovered which is; one square foot in total area; blows air from within the substrate and/or consistently receives water during any rain event. At this time it is the responsibility of the Project Manager to immediately contact a City of Austin Environmental Inspector for further investigation.
9. Temporary and Permanent Erosion Control: All disturbed areas shall be restored as noted below:

   A. All disturbed areas to be revegetated are required to place a minimum of six (6) inches of topsoil [see Standard Specification Item No. 601S.3(A)]. Do not add topsoil within the critical root zone of existing trees.

   Topsoil salvaged from the existing site is encouraged for use, but it should meet the standards set forth in 601S.

   An owner/engineer may propose use of onsite salvaged topsoil which does not meet the criteria of Standard Specification 601S by providing a soil analysis and a written statement from a qualified professional in soils, landscape architecture, or agronomy indicating the onsite topsoil will provide an equivalent growth media and specifying what, if any, soil amendments are required.

   Soil amendments shall be worked into the existing onsite topsoil with a disc or tiller to create a well-blended material.

The vegetative stabilization of areas disturbed by construction shall be as follows:

TEMPORARY VEGETATIVE STABILIZATION:

1. From September 15 to March 1, seeding shall be with or include a cool season cover crop: (Western Wheatgrass (Pascopyrum smithii) at 5.6 pounds per acre, Oats (Avena sativa) at 4.0 pounds per acre, Cereal Rye Grain (Secale cereale) at 45 pounds per acre. Contractor must ensure that any seed application requiring a cool season cover crop does not utilize annual ryegrass (Lolium multiflorum) or perennial ryegrass (Lolium perenne). Cool season cover crops are not permanent erosion control.
2. From March 2 to September 14, seeding shall be with hulled Bermuda at a rate of 45 pounds per acre or a native plant seed mix conforming to Item 604S or 609S.
   A. Fertilizer shall be applied only if warranted by a soil test and shall conform to Item No. 606S, Fertilizer. Fertilization should not occur when rainfall is expected or during slow plant growth or dormancy. Chemical fertilizer may not be applied in the Critical Water Quality Zone.
   B. Hydromulch shall comply with Table 1, below.
   C. Temporary erosion control shall be acceptable when the grass has grown at least 1½ inches high with a minimum of 95% total coverage so that all areas of a site that rely on vegetation for temporary stabilization are uniformly vegetated, and provided there are no bare spots larger than 10 square feet.
   D. When required, native plant seeding shall comply with requirements of the City of Austin Environmental Criteria Manual, and Standard Specification 604S or 609S.

Table 1: Hydromulching for Temporary Vegetative Stabilization

MATERIAL	DESCRIPTION	LONGEVITY	TYPICAL APPLICATIONS	APPLICATION RATES
100% or any blend of wood, cellulose, straw, and/or cotton plant material (except no mulch shall exceed 30% paper)	70% or greater Wood/Straw 30% or less Paper or Natural Fibers	0—3 months	Moderate slopes; from flat to 3:1	1,500 to 2,000 lbs per acre

PERMANENT VEGETATIVE STABILIZATION:

1. From September 15 to March 1, seeding is considered to be temporary stabilization only. If cool season cover crops exist where permanent vegetative stabilization is desired, the grasses shall be mowed to a height of less than one-half (½) inch and the area shall be re-seeded in accordance with Table 2 below. Alternatively, the cool season cover crop can be mixed with Bermudagrass or native seed and installed together, understanding that germination of warm-season seed typically requires soil temperatures of 60 to 70 degrees.
2. From March 2 to September 14, seeding shall be with hulled Bermuda at a rate of 45 pounds per acre with a purity of 95% and a minimum pure live seed (PLS) of 0.83. Bermuda grass is a warm season grass and is considered permanent erosion control. Permanent vegetative stabilization can also be accomplished with a native plant seed mix conforming to Item 604S or 609S.
   A. Fertilizer use shall follow the recommendation of a soil test. See Item 606S, Fertilizer. Applications of fertilizer (and pesticide) on City-owned and managed property requires the yearly submittal of a Pesticide and Fertilizer Application Record, along with a current copy of the applicator's license. For current copy of the record template contact the City of Austin's IPM Coordinator.
   B. Hydromulch shall comply with Table 2, below.
   C. Water the seeded areas immediately after installation to achieve germination and a healthy stand of plants that can ultimately survive without supplemental water. Apply the water uniformly to the planted areas without causing displacement or erosion of the materials or soil. Maintain the seedbed in a moist condition favorable for plant growth. All watering shall comply with City Code Chapter 6-4 (Water Conservation), at rates and frequencies determined by a licensed irrigator or other qualified professional, and as allowed by the Austin Water Utility and current water restrictions and water conservation initiatives.
   D. Permanent erosion control shall be acceptable when the grass has grown at least 1½ inches high with a minimum of 95 percent for the non-native mix, and 95 percent coverage for the native mix so that all areas of a site that rely on vegetation for stability must be uniformly vegetated, and provided there are no bare spots larger than 10 square feet.
   E. When required, native plant seeding shall comply with requirements of the City of Austin Environmental Criteria Manual, Items 604S and 609S.

Table 2: Hydromulching for Permanent Vegetative Stabilization

MATERIAL	DESCRIPTION	LONGEVITY	TYPICAL APPLICATIONS	APPLICATION RATES
Bonded Fiber Matrix (BFM)	80% Organic defibrated fibers			
10% Tackifier	6 months	On slopes up to 2:1 and erosive soil conditions	2,500 to 4,000 lbs per acre (see manufacturers recommendations)	
Fiber Reinforced Matrix (FRM)	65% Organic defibrated fibers 25% Reinforcing Fibers or less 10% Tackifier	Up to 12 months	On slopes up to 1:1 and erosive soil conditions	3,000 to 4,500 lbs per acre (see manufacturers recommendations)

10. Developer Information:

    Owner _____

    Phone # _____

    Address _____

    Owner's representative responsible for plan alterations: _____

    Phone # _____

    Person or firm responsible for erosion/sedimentation control maintenance: _____

    Phone # _____

    Person or firm responsible for tree/natural area protection Maintenance: _____

    Phone # _____

11. The contractor shall not dispose of surplus excavated material from the site without notifying the Development Services Department at 512-974-2278 at least 48 hours prior with the location and a copy of the permit issued to receive the material.

CITY OF AUSTIN STANDARD NOTES FOR TREE AND NATURAL AREA PROTECTION

1. All trees and natural areas shown on plan to be preserved shall be protected during construction with temporary fencing.
2. Protective fences shall be erected according to City of Austin Standards for Tree Protection.
3. Protective fences shall be installed prior to the start of any site preparation work (clearing, grubbing or grading), and shall be maintained throughout all phases of the construction project.
4. Erosion and sedimentation control barriers shall be installed or maintained in a manner which does not result in soil build-up within tree drip lines.
5. Protective fences shall surround the trees or group of trees, and will be located at the outermost limit of branches (drip line) , for natural areas, protective fences shall follow the Limit of Construction line, in order to prevent the following:
   A. Soil compaction in the root zone area resulting from vehicular traffic or storage of equipment or materials;
   B. Root zone disturbances due to grade changes (greater than 6 inches cut or fill), or trenching not reviewed and authorized by the City Aborist;
   C. Wounds to exposed roots, trunk or limbs by mechanical equipment;
   D. Other activities detrimental to trees such as chemical storage, cement truck cleaning, and fires.
6. Exceptions to installing fences at tree drip lines may be permitted in the following cases:
   A. Where there is to be an approved grade change, impermeable paving surface, tree well, or other such site development, erect the fence approximately 2 to 4 feet beyond the area disturbed;
   B. Where permeable paving is to be installed within a tree's drip line, erect the fence at the outer limits of the permeable paving area (prior to site grading so that this area is graded separately prior to paving installation to minimized root damage);
   C. Where trees are close to proposed buildings, erect the fence to allow 6 to 10 feet of work space between the fence and the building;
   D. Where there are severe space constraints due to tract size, or other special requirements, contact the City Arborist at 974-1876 to discuss alternatives.

Special Note: For the protection of natural areas, no exceptions to installing fences at the Limit of Construction line will be permitted.

7. Where any of the above exceptions result in a fence being closer than 4 feet to a tree trunk, protect the trunk with strapped-on planking to a height of 8 ft (or to the limits of lower branching) in addition to the reduced fencing provided.
8. Trees approved for removal shall be removed in a manner which does not impact trees to be preserved.
9. Any roots exposed by construction activity shall be pruned flush with the soil. Backfill root areas with good quality top soil as soon as possible. If exposed root areas are not backfilled within 2 days, cover them with organic material in a manner which reduces soil temperature and minimizes water loss due to evaporation.
10. Any trenching required for the installation of landscape irrigation shall be placed as far from existing tree trunks as possible.
11. No landscape topsoil dressing greater than 4 inches shall be permitted within the drip line of trees. No soil is permitted on the root flare of any tree.
12. Pruning to provide clearance for structures, vehicular traffic and equipment shall take place before damage occurs (ripping of branches, etc.).
13. All finished pruning shall be done according to recognized, approved standards of the industry (Reference the National Arborist Association Pruning Standards for Shade Trees available on request from the City Arborist).
14. Deviations from the above notes may be considered ordinance violations if there is substantial non-compliance or if a tree sustains damage as a result.

SEQUENCE OF CONSTRUCTION

The following sequence of construction shall be used for all development. The applicant is encouraged to provide any additional details appropriate for the particular development.

1. Temporary erosion and sedimentation controls are to be installed as indicated on the approved site plan or subdivision construction plan and in accordance with the Erosion Sedimentation Control Plan (ESC) and Stormwater Pollution Prevention Plan (SWPPP) that is required to be posted on the site. Initiate tree protection, initiate tree mitigation measures and conduct "Pre – Construction" tree fertilization (if applicable).
2. The Environmental Project Manager or Site Supervisor must contact the Development Services Department, Environmental Inspection, at 512-974-2278, 72 hours prior to the scheduled date of the required on-site preconstruction meeting.
3. The Environmental Project Manager, and/or Site Supervisor, and/or Designated Responsible Party, and the General Contractor will follow the Erosion Sedimentation Control Plan (ESC) and Storm Water Pollution Prevention Plan (SWPPP) posted on the site. Temporary erosion and sedimentation controls will be revised, if needed, to comply with City Inspectors' directives, and revised construction schedule relative to the water quality plan requirements and the erosion plan.
4. Rough grade the pond(s) at 100% proposed capacity. Either the permanent outlet structure or a temporary outlet must be constructed prior to development of embankment or excavation that leads to ponding conditions. The outlet system must consist of a sump pit outlet and an emergency spillway meeting the requirements of the Drainage Criteria Manual and/or the Environmental Criteria Manual, as required. The outlet system shall be protected from erosion and shall be maintained throughout the course of construction until installation of the permanent water quality pond(s).
5. Temporary erosion and sedimentation controls will be inspected and maintained in accordance with the Erosion Sedimentation Control Plan (ESC) and Storm Water Pollution Prevention Plan (SWPPP) posted on the site.
6. Begin site clearing/construction (or demolition) activities.
7. In the Barton Springs Zone, the Environmental Project Manager or Site Supervisor will schedule a mid-construction conference to coordinate changes in the construction schedule and evaluate effectiveness of the erosion control plan after possible construction alterations to the site. Participants shall include the City Inspector, Project Engineer, General Contractor and Environmental Project Manager or Site Supervisor. The anticipated completion date and final construction sequence and inspection schedule will be coordinated with the appropriate City Inspector.
8. Permanent water quality ponds or controls will be cleaned out and filter media will be installed prior to/concurrently with revegetation of site.
9. Complete construction and start revegetation of the site and installation of landscaping.
10. Upon completion of the site construction and revegetation of a project site, the design engineer shall submit an engineer's letter of concurrence bearing the engineer's seal, signature, and date to the Development Services Department indicating that construction, including revegetation, is complete and in substantial compliance with the approved plans. After receiving this letter, a final inspection will be scheduled by the appropriate City inspector.
11. Upon completion of landscape installation of a project site, the Landscape Architect shall submit a letter of concurrence to the Development Services Department indicating that the required landscaping is complete and in substantial conformity with the approved plans. After receiving this letter, a final inspection will be scheduled by the appropriate City inspector.
12. After a final inspection has been conducted by the City inspector and with approval from the City inspector, remove the temporary erosion and sedimentation controls and complete any necessary final revegetation resulting from removal of the controls. Conduct any maintenance and rehabilitation of the water quality ponds or controls.

REMEDIAL TREE CARE NOTES AERATION AND SUPPLEMENTAL NUTRIENT REQUIREMENTS FOR TREES WITHIN CONSTRUCTION AREAS

As a component of an effective remedial tree care program per Environmental Criteria Manual section 3.5.4, preserved trees within the limits of construction may require soil aeration and supplemental nutrients. Soil and/or foliar analysis should be used to determine the need for supplemental nutrients. The City Arborist may require these analyses as part of a comprehensive tree care plan. Soil pH shall be considered when determining the fertilization composition as soil pH influences the tree's ability to uptake nutrients from the soil. If analyses indicate the need for supplemental nutrients, then humate/nutrient solutions with mycorrhizae components are highly recommended. In addition, soil analysis may be needed to determine if organic material or beneficial microorganisms are needed to improve soil health. Materials and methods are to be approved by the City Arborist (512-974-1876) prior to application. The owner or general contractor shall select a fertilization contractor and iensure coordination with the City Arborist.

Pre-construction treatment should be applied in the appropriate season, ideally the season preceding the proposed construction. Minimally, areas to be treated include the entire critical root zone of trees as depicted on the City approved plans. Treatment should include, but not limited to, fertilization, soil treatment, mulching, and proper pruning.

Post-construction treatment should occur during final revegetation or as determined by a qualified arborist after construction. Construction activities often result in a reduction in soil macro and micro pores and an increase in soil bulk density. To ameliorate the degraded soil conditions, aeration via water and/or air injected into the soil is needed or by other methods as approved by the City Arborist. The proposed nutrient mix specifications and soil and/or foliar analysis results need to be provided to and approved by the City Arborist prior to application (Fax # 512-974-3010). Construction which will be completed in less than 90 days may use materials at ½ recommended rates. Alternative organic fertilizer materials are acceptable when approved by the City Arborist. Within 7 days after fertilization is performed, the contractor shall provide documentation of the work performed to the City Arborist, Planning and Development Review Department. P.O. Box 1088, Austin, TX 78767. This note should be referenced as item #1 in the Sequence of Construction.

Development Services Department
JUL 12 '19

SITE PLAN APPROVAL SHEET 43 OF 46
FILE NUMBER: SP-2018-0189C APPLICATION DATE: 04/26/2018
APPROVED BY COMMISSION ON _____ UNDER SECTION 112
OF CHAPTER 25-5 OF THE CITY OF AUSTIN CODE.
EXPIRATION DATE(25-5-81, LDC) 7/3/20
CASE MANAGER CHRISTINE BARTON-HOLMES
PROJECT EXPIRATION DATE (ORD. #970905-A) _____
DMPZ DDZ
DIRECTOR, DEVELOPMENT SERVICES DEPARTMENT
RELEASED FOR GENERAL COMPLIANCE: 7/3/19 ZONING P
Rev. 1 _____ Correction 1 _____
Rev. 2 _____ Correction 2 _____
Rev. 3 _____ Correction 3 _____
Final Plat must be recorded by the Project Expiration Date, if applicable. Subsequent Site Plans which do not comply with the Code current at the time of filing, and all required Building Permits and/or a notice of construction (if a building permit is not required), must also be approved prior to the Project Expiration Date.

BAR LENGTH ON ORIGINAL DRAWING EQUALS ONE INCH, ADJUST SCALE ACCORDINGLY.

CAS CONSULTING & SERVICES, INC.
CIVIL ENGINEERING | PROGRAM MANAGEMENT | CONSTRUCTION MANAGEMENT
7908 Cameron Road | Austin, TX 78754 | REG. NO. F-003572
Main: 512.836.2388 | Fax: 512.836.4515

STATE OF TEXAS — ANDREW M. ROOKE — 66364 — LICENSED PROFESSIONAL ENGINEER
5/28/2019

NO.	DATE:	DESCRIPTION

HARUTUNIAN ENGINEERING INCORPORATED
TEXAS FIRM REGISTRATION NUMBER F-2408
ENGINEERING AND ENVIRONMENTAL CONSULTANTS
305 EAST HUNTLAND DRIVE SUITE 500
AUSTIN, TEXAS 78752

REUSE OF DOCUMENTS
This document, and the designs incorporated herein, is an instrument of professional service that has been developed, designed and prepared by Harutunian Engineering, Inc., and is not to be used, in whole or in part, for any other project without giving written notice to Harutunian Engineering, Inc.

DESIGNED BY: CAS
CHECKED BY: LR
APPROVED BY: AMR
SUBMITTAL DATE: MAY 2019
SCALE:

SOUTH AUSTIN REGIONAL WASTEWATER TREATMENT PLANT
ELECTRICAL SUBSTATION NO. 1 REPLACEMENT PROJECT
CIP I.D.# 3333.032

ENVIRONMENTAL NOTES

PROJECT NO: 2014-300 | SHT. 43 OF 46 | DWG NO. TD-C-007A

LANDSCAPE NOTES

1. THE CONTRACTOR SHALL LOCATE AND VERIFY THE EXISTENCE OF ALL OVERHEAD AND UNDERGROUND UTILITIES (INCLUDING THOSE PROPOSED WITH THIS PROJECT, I.E. IRRIGATION, WASTEWATER, WATER, STORM SEWER, GAS, TELECOM, FIBER OPTIC, ELECTRIC, ETC.) PRIOR TO STARTING WORK.

2. INFORMATION PROVIDED ON THIS PLAN IS GENERAL IN NATURE; DIMENSIONS, AREAS, AND DISTANCES ARE APPROXIMATE AND SHOULD BE FIELD VERIFIED PRIOR TO BIDDING. DISCREPANCIES SHALL BE REPORTED TO THE LANDSCAPE ARCHITECT FOR RESOLUTION PRIOR TO STARTING WORK.

3. THE CONTRACTOR IS TO THOROUGHLY FAMILIARIZE HIM/HERSELF WITH ALL PLANS, SPECIFICATIONS AND THE SITE PRIOR TO BIDDING. FAILURE TO DO SO WILL NOT REDUCE THE CONTRACTOR'S OBLIGATION TO PERFORM THE WORK AS DESCRIBED FOR THE PRICE BID.

4. QUANTITIES SHOWN ARE INTENDED TO ASSIST CONTRACTORS IN EVALUATING THEIR OWN TAKE OFFS AND ARE NOT GUARANTEED AS ACCURATE REPRESENTATIONS OF REQUIRED MATERIALS. THE CONTRACTOR SHALL BE RESPONSIBLE FOR HIS BID QUANTITIES AND IS REQUIRED TO REFLECT THE DESIGN INTENT.

5. ALL PLANT MATERIALS SHALL CONFORM TO THE GUIDELINES ESTABLISHED BY THE CURRENT AMERICAN STANDARD FOR NURSERY STOCK, PUBLISHED BY THE AMERICAN ASSOCIATION OF NURSERYMEN, OR EQUIVALENT.

6. NO SUBSTITUTIONS OF PLANT MATERIAL LOCATIONS, SPECIES OR SIZE WILL BE ALLOWED WITHOUT PRIOR APPROVAL OF THE LANDSCAPE ARCHITECT. ALL PLANT MATERIALS SHALL BE APPROVED BY THE LANDSCAPE ARCHITECT PRIOR TO INSTALLATION.

7. AS PART OF THE BASE BID, THE LANDSCAPE CONTRACTOR IS RESPONSIBLE FOR ALL LANDSCAPE MAINTENANCE AS INDICATED IN THE PROJECT SPECIFICATIONS (INCLUDING, BUT NOT LIMITED TO MOWING, WATERING, REPLACEMENT OF UNACCEPTABLE, DISEASED OR DEAD PLANTS, ETC.) AND WEED CONTROL UNTIL FINAL ACCEPTANCE BY OWNER.

8. CONTRACTOR SHALL GUARANTEE ALL PLANT MATERIAL TO BE ALIVE AND BE IN A HEALTHY, VIGOROUS CONDITION FOR A PERIOD OF ONE YEAR FROM THE DATE OF COMPLETION OF THE ENTIRE PROJECT OR OTHER DATE(S) ESTABLISHED BY THE LANDSCAPE ARCHITECT, OR OWNER, EXCEPT AS MAY RESULT FROM NEGLECT OR DAMAGE BY THE OWNER, DAMAGE BY OTHERS OR UNUSUAL PHENOMENA BEYOND THE CONTRACTORS CONTROL.

9. CONTRACTOR SHALL REPLACE ALL DEAD, AND/OR UNHEALTHY PLANT MATERIALS AND/OR PLANT MATERIALS THAT HAVE PARTIALLY DIED PURSUANT TO THE CONDITION OF THE WARRANTY AT NO EXPENSE TO THE OWNER. DEAD MATERIALS MUST BE REPLACED WITHIN 10 BUSINESS DAYS PER TECHNICAL PROVISIONS. RE-WARRANT REPLACEMENT PLANTS FOR AN ADDITIONAL ONE YEAR UNDER THE SAME TERMS AS THE ORIGINAL WARRANTY. PLANT MATERIALS USED FOR REPLACEMENT SHALL BE THE SAME SPECIES, SIZE AND SHAPE.

10. ALL PLANTS SHALL BE HEALTHY, VIGOROUS AND REPRESENTATIVE OF THE SPECIES SPECIFIED. ALL PLANTS SHALL BE WELL BRANCHED, PROPORTIONED, AND FREE OF ALL INSECTS, DISEASES, BARK BRUISES, SCRAPES, CRACKED BRANCHES AND PHYSICAL DAMAGE. PLANTS SHALL BE BALLED AND WRAPPED OR CONTAINER GROWN AS SPECIFIED. NO PLANT MATERIALS WILL BE ACCEPTED IF IT IS ROOT BOUND. ALL ROOT WRAPPING MATERIAL SHALL BE REMOVED AT TIME OF PLANTING, AS SHOWN ON DETAILS.

11. ALL PLANTS SHALL BE INSTALLED AS PER DETAILS AND THE CONTRACT SPECIFICATIONS.

12. ALL PLANTS AND STAKES SHALL BE SET PLUMB UNLESS OTHERWISE SPECIFIED.

13. THE LANDSCAPE CONTRACTOR SHALL REFER TO THE CONTRACT SPECIFICATIONS FOR ADDITIONAL REQUIREMENTS.

14. INSTALLATION OF LANDSCAPE SHALL BE PERFORMED BY A QUALIFIED LANDSCAPE INSTALLER WITH A MINIMUM OF FIVE YEARS CONTINUOUS EXPERIENCE OF INSTALLING LANDSCAPE PLANTINGS OF SIMILAR SIZE AND SCOPE.

15. CONTRACTOR SHALL PROVIDE MAINTENANCE FOR LANDSCAPE & IRRIGATION SYSTEM FOR 12 MONTHS FOLLOWING FINAL ACCEPTANCE OF ENTIRE PROJECT.

16. LANDSCAPE MATERIALS SHALL BE LOCATED SO AS NOT TO OBSTRUCT VISUAL OR PHYSICAL ACCESS TO FIRE HYDRANTS. ALL LANDSCAPE MATERIALS SHALL BE INSTALLED IN CONFORMANCE WITH UTILITY COMPANY REQUIREMENTS AT TRANSFORMERS, METERS, OVERHEAD LINES, ETC. NOTIFY LANDSCAPE ARCHITECT OF ANY DISCREPANCIES.

17. EXECUTE ALL LANDSCAPING AND REVEGETATION PRIOR TO REQUEST FOR CERTIFICATE OF OCCUPANCY, FINAL INSPECTION OR AS OTHERWISE DIRECTED BY THE LANDSCAPE ARCHITECT OR OWNER. HOWEVER, NO PLANT MATERIALS SHALL BE INSTALLED BEFORE ROUGH GRADING HAS BEEN COMPLETED AND APPROVED BY THE LANDSCAPE ARCHITECT, OWNER OR OWNER'S DESIGNATED REPRESENTATIVE. FULLY PREPARE ALL LANDSCAPE BEDS (INCLUDING IRRIGATION) PRIOR TO INSTALLATION OF LANDSCAPE PLANTS.

18. SITE STOCKPILED TOPSOIL MAY BE USED IF IT HAS BEEN DEEMED ACCEPTABLE IN QUALITY AND APPROVED BY LANDSCAPE ARCHITECT.

19. ALL PLANTS SHALL BEAR THE SAME RELATIONSHIP TO FINISHED GRADE AS THE PLANT'S ORIGINAL GRADE BEFORE DIGGING.

20. THE LANDSCAPE CONTRACTOR SHALL PROVIDE A TEMPORARY IRRIGATION SYSTEM FOR REVEGETATION AREAS AND PERMANENT IRRIGATION FOR RAIN GARDENS, FULLY COMPLIANT WITH TCEQ REQUIREMENTS AND COMPLIANT WITH THE LANDSCAPE IRRIGATION NOTES AND CONTRACT SPECIFICATIONS.

LANDSCAPE IRRIGATION NOTES

TEMPORARY AND PERMANENT AUTOMATIC IRRIGATION SYSTEMS SHALL MEET THE FOLLOWING REQUIREMENTS:

1. A NEW IRRIGATION SYSTEM MUST BE DESIGNED AND INSTALLED SO THAT:

(A) THERE IS NOT DIRECT OVERSPRAY ONTO NON-IRRIGATED AREAS;

(B) THE SYSTEM DOES NOT INCLUDE SPRAY IRRIGATION ON AREAS LESS THAN SIX (6) FEET WIDE (SUCH AS MEDIANS, BUFFER STRIPS, AND PARKING LOT ISLANDS)

(C) ABOVE-GROUND IRRIGATION EMISSION DEVICES ARE SET BACK AT LEAST SIX (6) INCHES FROM IMPERVIOUS SURFACES;

(D) CIRCUIT REMOTE CONTROL VALVES HAVE ADJUSTABLE FLOW CONTROLS;

(E) SERVICEABLE IN-HEAD CHECK VALVES ARE ADJACENT TO PAVED AREAS WHERE ELEVATION DIFFERENCES MAY CAUSE LOW HEAD DRAINAGE;

(F) AN AUTOMATIC RAIN SHUT-OFF DEVICE SHUTS OFF THE IRRIGATION SYSTEM AUTOMATICALLY AFTER NOT MORE THAN A ONE-HALF INCH (1/2") RAINFALL;

(G) ZONE VALVES AND CIRCUITS ARE SEPARATED BASED ON PLANT WATER REQUIREMENTS;

(H) AN IRRIGATION EMISSION DEVICE (SUCH AS SPRAY, ROTOR, OR DRIP EMITTER) DOES NOT EXCEED THE MANUFACTURER'S RECOMMENDED OPERATING PRESSURE; AND

(I) NO COMPONENT OF THE IRRIGATION SYSTEM DEVIATES FROM THE MANUFACTURER'S RECOMMENDED USE OF THE PRODUCT.

2. THE MAXIMUM SPACING BETWEEN SPRAY OR ROTARY SPRINKLER HEADS MUST NOT EXCEED THE RADIUS OF THROW OF THE HEAD UNLESS MANUFACTURER OF THE SPRINKLER HEAD SPECIFICALLY RECOMMENDS A GREATER SPACING. THE RADIUS OF THROW IS DETERMINED BY REFERENCE TO THE MANUFACTURER'S SPECIFICATIONS FOR A SPECIFIC NOZZLE AT A SPECIFIC OPERATING PRESSURE.

3. THE IRRIGATION INSTALLER SHALL DEVELOP AND PROVIDE AN AS-BUILT DESIGN PLAN AND WATER BUDGET TO THE OWNER AT THE TIME THE FINAL INSPECTION IS PERFORMED. THE WATER BUDGET SHALL INCLUDE:

(A) A CHART CONTAINING ZONE NUMBERS, PRECIPITATION RATE, AND GALLONS PER MINUTE; AND

(B) THE LOCATION OF THE EMERGENCY IRRIGATION SYSTEM SHUT-OFF VALVE.

(C) IRRIGATION CONTRACTOR SHALL PROVIDE A COMPLETE AS-BUILT PLAN TO OWNER, OR OWNER'S DESIGNATED REPRESENTATIVE SHOWING ALL IRRIGATION COMPONENTS AND SIZE OF COMPONENTS, INCLUDING WATER PRESSURE, MAIN LINE, LATERAL LINES, VALVES, HEADS, BACKFLOW DEVICE, CONTROLLER, QUICK COUPLERS, ETC.

4. COMPLY WITH ALL APPLICABLE TCEQ IRRIGATION RULES AND REGULATIONS.

5. CONTRACTOR IS TO VERIFY PRESSURE AND WATER SUPPLY CHARACTERISTICS ARE ADEQUATE FOR THIS INSTALLATION. ANY DISCREPANCIES OR INADEQUACIES SHALL BE REPORTED TO THE OWNER IMMEDIATELY, BEFORE STARTING CONSTRUCTION.

6. CONTRACTOR SHALL OBTAIN ALL PERMITS AND HANDLE ALL INSPECTIONS FOR THIS WORK AS REQUIRED BY LOCAL REGULATIONS AND SHALL PAY ALL FEES ASSOCIATED WITH THESE PERMIT(S).

7. VERIFY LOCATION OF CONTROLLER, WATER SUPPLY; SITE CONDITIONS MAY VARY. OPERABLE IRRIGATION EQUIPMENT (VALVES, QUICK COUPLERS, BFP, ETC.) SHALL BE INSTALLED SEPARATELY IN VALVE BOXES.

8. ALL HEADS SHALL BE INSTALLED ON TRIPLE SWING JOINTS. HEADS SHALL BE NOT BE LOCATED CLOSER THAN 6" FROM PAVEMENT.

9. ADJUST RADII AND SPRAY PATTERNS TO ELIMINATE OVERSPRAY ONTO BUILDINGS, SIDEWALKS, FENCES, DRIVEWAYS, ROADWAYS, ETC.

10. ALL PAVEMENT CROSSINGS (LATERALS, WIRING, MAINLINE, ETC.) SHALL OCCUR WITHIN SLEEVES. INCLUDING SIDEWALKS, DRIVEWAYS, TRAILS, BIKE WAYS, ROADWAYS, ETC.

11. PRIOR TO CONSTRUCTION, VERIFY WITH THE GENERAL CONTRACTOR AND ALL UTILITY COMPANIES THE EXACT LOCATION OF ALL UNDERGROUND UTILITIES. IMMEDIATELY REPORT ANY BREAKAGES TO THE APPROPRIATE UTILITY COMPANY.

12. THE CONTRACTOR IS TO INSTALL ALL SLEEVES IN SEQUENCE WITH OTHER CONSTRUCTION ACTIVITIES, AND WILL BE RESPONSIBLE FOR COORDINATING WITH OTHER SITE CONTRACTORS FOR THIS WORK. ADEQUATELY MARK THE LOCATIONS OF ALL SLEEVES AND PIPE CONNECTION POINTS TO EXISTING LINES.

13. INSTALL THE MAIN LINE A MINIMUM OF 15" DEEP AND LATERAL LINES MIN. 12" DEEP.

14. PROVIDE A NEW WATER PROOF TAG WITH CONTRACTOR'S NAME AND TELEPHONE NUMBER CLEARLY SHOWN AND SECURELY ATTACHED TO THE INSIDE OF THE CONTROLLER DOOR.

15. CONTRACTOR SHALL PROVIDE A TCEQ AND CITY COMPLIANT IRRIGATION PLAN TO OWNER FOR REVIEW AND COMMENT SIX WEEKS PRIOR TO START OF CONSTRUCTION OF IRRIGATION SYSTEM. IRRIGATION PLAN SHALL BE SEALED BY A TEXAS LICENSED IRRIGATOR AND INCLUDE MEASURED AVAILABLE PRESSURE AND FLOW, PRESSURE CALCULATIONS, ZONE CHART, ETC.

16. REFERENCE CIVIL DRAWINGS FOR LOCATION OF TEMPORARY IRRIGATION METER AND PERMANENT IRRIGATION METER

Development Services Department
JUL 17 2019

SITE PLAN APPROVAL SHEET 44 OF 46
FILE NUMBER: SP-2018-0189C APPLICATION DATE: 04/26/2018
APPROVED BY COMMISSION ON _____ UNDER SECTION 112 OF
CHAPTER 25-5 OF THE CITY OF AUSTIN CODE.
EXPIRATION DATE(25-5-81, LDC) 7/3/22
CASE MANAGER CHRISTINE BARTON-HOLMES
PROJECT EXPIRATION DATE (ORD. #970905-A) _____
DMPZ_____DDZ_____
Director, Development Services Department
RELEASED FOR GENERAL COMPLIANCE: 7/3/19 ZONING P
Rev. 1 _____ Correction 1 _____
Rev. 2 _____ Correction 2 _____
Rev. 3 _____ Correction 3 _____
Final Plat must be recorded by the Project Expiration Date, if applicable. Subsequent Site Plans which do not comply with the Code current at the time of filing, and all required Building Permits and/or a notice of construction (if a building permit is not required), must also be approved prior to the Project Expiration Date.

BAR LENGTH ON ORIGINAL DRAWING EQUALS ONE INCH, ADJUST SCALE ACCORDINGLY.

mwm Design Group
305 E. Huntland Drive
Suite 200
Austin, Texas 78752
p: 512.453.0767
f: 512.453.1734
MWM#: 197-05

REGISTERED LANDSCAPE ARCHITECT DAVID J. CAZARES 1871 STATE OF TEXAS
28 May 2019

NO.	DATE:	DESCRIPTION

HARUTUNIAN ENGINEERING INCORPORATED
TEXAS FIRM REGISTRATION NUMBER F-2408
ENGINEERING AND ENVIRONMENTAL CONSULTANTS
305 EAST HUNTLAND DRIVE SUITE 500
AUSTIN, TEXAS 78752

REUSE OF DOCUMENTS
This document, and the designs incorporated herein, is an instrument of professional service that has been developed, designed and prepared by Harutunian Engineering, Inc., and is not to be used, in whole or in part, for any other project without giving written notice to Harutunian Engineering, Inc.

DESIGNED BY: HEI
CHECKED BY: HEI
APPROVED BY: HEI
SUBMITTAL DATE: SEPTEMBER 2018
SCALE:

SOUTH AUSTIN REGIONAL WASTEWATER TREATMENT PLANT
ELECTRICAL SUBSTATION NO. 1 REPLACEMENT PROJECT
CIP I.D.# 3333.032

LANDSCAPE AND IRRIGATION NOTES

PROJECT NO: 2014-300 SHT. 44 OF 46 DWG NO. LP001

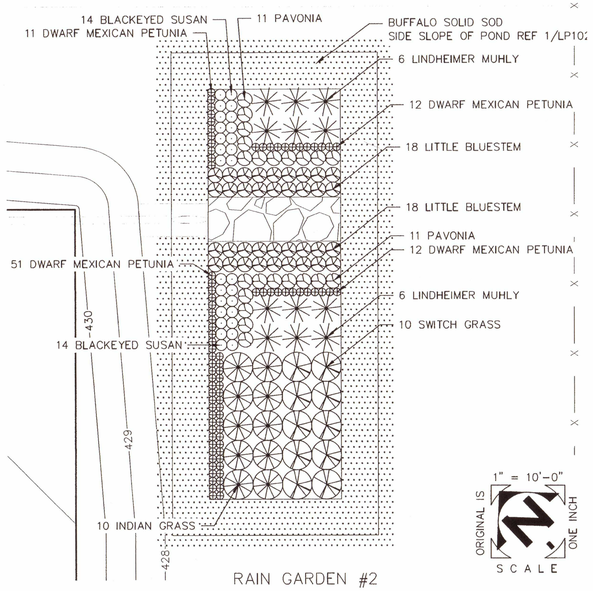

2 LP101 RAIN GARDEN PLANTING PLAN
SCALE: 1" = 10'-0"

3 LP101 RAIN GARDEN PLANTING PLAN
SCALE: 1" = 10'-0"

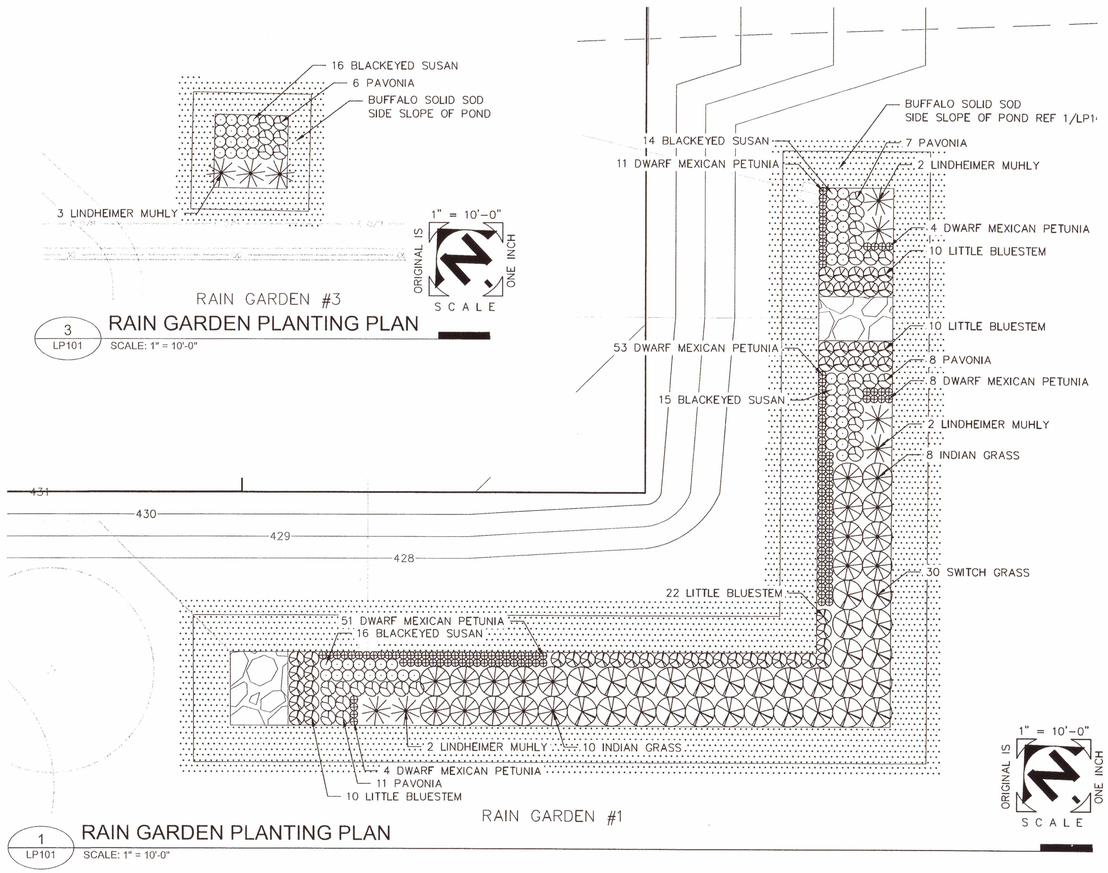

1 LP101 RAIN GARDEN PLANTING PLAN
SCALE: 1" = 10'-0"

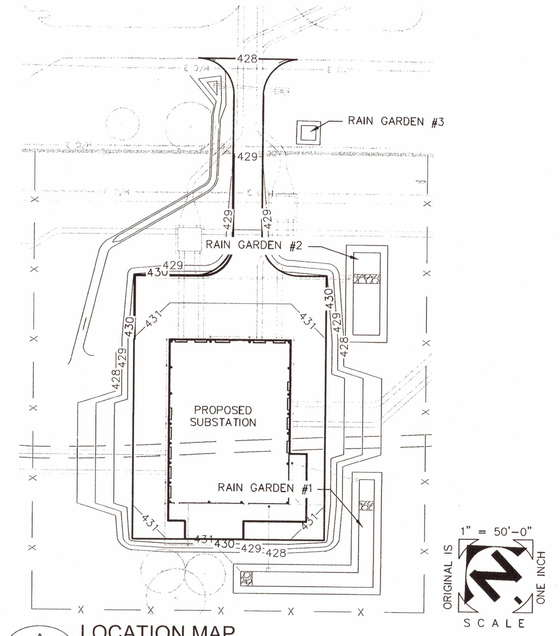

A LP101 LOCATION MAP
SCALE: 1" = 50'-0"

RAIN GARDEN #1

						18-Apr-18
Pond Bottom	1,523	sf				
Number of PlantS				Required		Provided
Rain Garden		1,523	x 20% =	305		308
Filtration Pond Required Landscape		Size			Equivalent 1-Gallon	
Blackeyed Susan		1 Gallon		45	1	45
Dwarf Mexican Petunia		1 Gallon		131	1	131
Indian Grass		1 Gallon		18	1	18
Lindheimer Muhly		1 Gallon		6	1	6
Little Bluestem		1 Gallon		52	1	52
Pavonia		1 Gallon		26	1	26
Switch Grass		1 Gallon		30	1	30
Solid Sod*		-	sf / 3 sf =	-	1	-
						308

*Assumes 3 square feet of sod is equal to a one gallon plant

RAIN GARDEN #2

						18-Apr-18
Pond Bottom	1,008	sf				
Number of PlantS				Required		Provided
Rain Garden		1,008	x 20% =	202		204
Filtration Pond Required Landscape		Size			Equivalent 1-Gallon	
Blackeyed Susan		1 Gallon		28	1	28
Dwarf Mexican Petunia		1 Gallon		86	1	86
Indian Grass		1 Gallon		10	1	10
Lindheimer Muhly		1 Gallon		12	1	12
Little Bluestem		1 Gallon		36	1	36
Pavonia		1 Gallon		22	1	22
Switch Grass		1 Gallon		10	1	10
Solid Sod*		-	sf / 3 sf =	-	1	-
						204

*Assumes 3 square feet of sod is equal to a one gallon plant

RAIN GARDEN #3

						18-Apr-18
Pond Bottom	100	sf				
Number of PlantS				Required		Provided
Rain Garden		100	x 20% =	20		25
Filtration Pond Required Landscape		Size			Equivalent 1-Gallon	
Blackeyed Susan		1 Gallon		16	1	16
Lindheimer Muhly		1 Gallon		3	1	3
Pavonia		1 Gallon		6	1	6
		1 Gallon		-	1	-
		1 Gallon		-	1	-
Solid Sod		-	sf / 3 sf =	-	1	-
						25

*Assumes 3 square feet of sod is equal to a one gallon plant

Development Services Department
JUL 10 2019

SITE PLAN APPROVAL SHEET 45 OF 46
FILE NUMBER: SP-2018-0189C APPLICATION DATE: 04/26/2018
APPROVED BY COMMISSION ON _____ UNDER SECTION 112 OF CHAPTER 25-5 OF THE CITY OF AUSTIN CODE.
EXPIRATION DATE(25-5-81, LDC) 7/3/22
CASE MANAGER CHRISTINE BARTON-HOLMES
PROJECT EXPIRATION DATE (ORD. #970905-A)_____
DWPZ___ DDZ___
Director, Development Services Department
RELEASED FOR GENERAL COMPLIANCE: 7/3/19 ZONING P
Rev. 1 _____ Correction 1 _____
Rev. 2 _____ Correction 2 _____
Rev. 3 _____ Correction 3 _____
Final Plat must be recorded by the Project Expiration Date, if applicable. Subsequent Site Plans which do not comply with the Code current at the time of filing, and all required Building Permits and/or a notice of construction (if a building permit is not required), must also be approved prior to the Project Expiration Date.

BAR LENGTH ON ORIGINAL DRAWING EQUALS ONE INCH, ADJUST SCALE ACCORDINGLY.

mwm DesignGroup
MWM#: 197-05
305 E. Huntland Drive
Suite 200
Austin, Texas 78752
p: 512.453.0767
f: 512.453.1734

REGISTERED LANDSCAPE ARCHITECT DAVID J. CAZARES 1871 STATE OF TEXAS
28 May 2019

NO.	DATE:	DESCRIPTION

HARUTUNIAN ENGINEERING INCORPORATED
TEXAS FIRM REGISTRATION NUMBER F-2408
ENGINEERING AND ENVIRONMENTAL CONSULTANTS
305 EAST HUNTLAND DRIVE SUITE 500
AUSTIN, TEXAS 78752

REUSE OF DOCUMENTS
This document, and the designs incorporated herein, is an instrument of professional service that has been developed, designed and prepared by Harutunian Engineering, Inc., and is not to be used, in whole or in part, for any other project without giving written notice to Harutunian Engineering, Inc.

DESIGNED BY:	HEI
CHECKED BY:	HEI
APPROVED BY:	HEI
SUBMITTAL DATE:	SEPTEMBER 2018
SCALE:	

SOUTH AUSTIN REGIONAL WASTEWATER TREATMENT PLANT
ELECTRICAL SUBSTATION NO. 1 REPLACEMENT PROJECT
CIP I.D.# 3333.032

RAIN GARDEN PLANTING PLAN

PROJECT NO: 2014-300 | SHT. 45 OF 46 | DWG NO. LP101

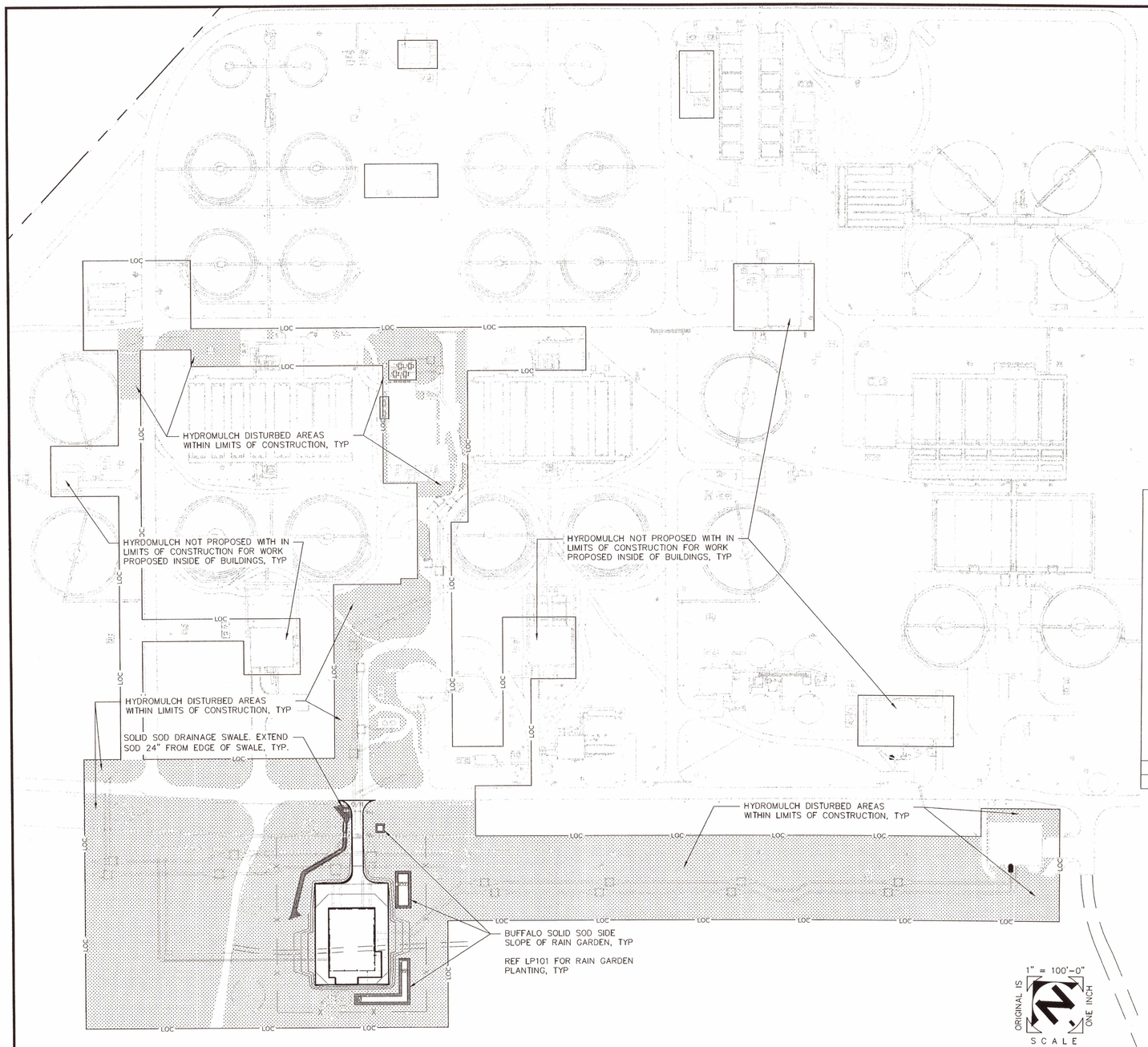

1" = 100'-0"
ORIGINAL IS ONE INCH
SCALE

REVEGETATION NOTES:

1. HYDROMULCH: 604S SEEDING FOR EROSION CONTROL, TABLE 4, NATIVE GRASS, INCLUDING FORBES AND WILDFLOWERS. ALL SEEDS IN TABLE 4 MUST BE USED.
2. LIMITS OF HYDROMULCH MATCH ANTICIPATED LIMITS OF DISTURBED AREA. HOWEVER, ALL ADDITIONAL AREAS WITHIN THE LIMITS OF CONSTRUCTION WHICH ARE DISTURBED BY CONSTRUCTION ARE REQUIRED TO BE RESTORED USING 604S SEEDING FOR EROSION CONTROL, TABLE 4, NATIVE GRASS, INCLUDING FORBES AND WILDFLOWERS. ALL SEEDS IN TABLE 4 MUST BE USED.
3. EXISTING STAGING AREA SHALL BE HYDROMULCHED USING 604S SEEDING FOR EROSION CONTROL, TABLE 4, NATIVE GRASS. FORBES AND WILDFLOWERS ARE NOT REQUIRED FOR THE EXISTING STAGING AREA. REFERENCE THE EROSION CONTROL SHEET 1 (A-C-027) FOR THE LOCATION AND LIMITS OF REVEGETATION.
4. CONTRACTOR IS RESPONSIBLE FOR WATERING OF ALL HYDROMULCH, SOLID SOD AND RAIN GARDEN AREAS UNTIL ESTABLISHMENT.
5. HYDROMULCH OF THE SITE WILL NOT CONSIDERED TO BE ESTABLISHED UNTIL ALL AREAS OF A SITE THAT RELY ON VEGETATION FOR STABILITY ARE VEGETATED WITH A MINIMUM OF 95 PERCENT TOTAL COVERAGE. BARE AREAS SHALL NOT EXCEED 16 SQUARE FEET AND THE AVERAGE HEIGHT OF VEGETATION SHALL STAND AT A MINIMUM OF 1½ INCH. NINETY (90) PERCENT OF THE REVEGETATED AREA MUST BE FREE OF WEEDS LISTED IN TABLE 3 (604S SEEDING FOR EROSION CONTROL). BARE AREAS GREATER THAN 10 S.F. SHALL BE RE-PREPARED AND RESEEDED AS REQUIRED TO DEVELOP AN ACCEPTABLE STAND OF PLANT MATERIAL AT NO ADDITIONAL COST TO THE OWNER.

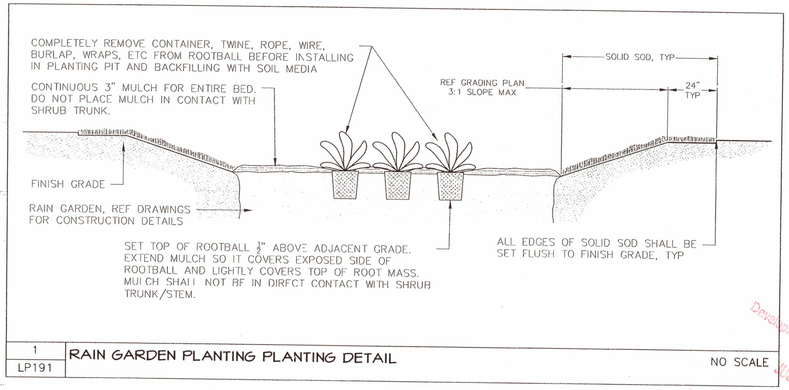

1 LP191 RAIN GARDEN PLANTING PLANTING DETAIL NO SCALE

SITE PLAN APPROVAL SHEET 46 OF 46
FILE NUMBER: SP-2018-0189C APPLICATION DATE: 04/26/2018
APPROVED BY COMMISSION ON _____ UNDER SECTION 112 OF CHAPTER 25-5 OF THE CITY OF AUSTIN CODE.
EXPIRATION DATE(25-5-81, LDC) 7/3/22
CASE MANAGER: CHRISTINE BARTON-HOLMES
PROJECT EXPIRATION DATE (ORD. #970905-A)_____
DMPZ_____ DDA_____
Director, Development Services Department
RELEASED FOR GENERAL COMPLIANCE: 7/3/19 ZONING P
Rev. 1 _____ Correction 1 _____
Rev. 2 _____ Correction 2 _____
Rev. 3 _____ Correction 3 _____
Final Plat must be recorded by the Project Expiration Date, if applicable. Subsequent Site Plans which do not comply with the Code current at the time of filing, and all required Building Permits and/or a notice of construction (if a building permit is not required), must also be approved prior to the Project Expiration Date.

BAR LENGTH ON ORIGINAL DRAWING EQUALS ONE INCH. ADJUST SCALE ACCORDINGLY.

mwm Design Group
305 E. Huntland Drive Suite 200, Austin, Texas 78752
p: 512.453.0767
f: 512.453.1734
MWM#: 197-05

REGISTERED LANDSCAPE ARCHITECT DAVID J. CAZARES 1871 STATE OF TEXAS
28 May 2019

NO.	DATE:	DESCRIPTION

HARUTUNIAN ENGINEERING INCORPORATED
TEXAS FIRM REGISTRATION NUMBER F-2408
ENGINEERING AND ENVIRONMENTAL CONSULTANTS
305 EAST HUNTLAND DRIVE SUITE 500
AUSTIN, TEXAS 78752

REUSE OF DOCUMENTS
This document, and the designs incorporated herein, is an instrument of professional service that has been developed, designed and prepared by Harutunian Engineering, Inc., and is not to be used, in whole or in part, for any other project without giving written notice to Harutunian Engineering, Inc.

DESIGNED BY:	HEI
CHECKED BY:	HEI
APPROVED BY:	HEI
SUBMITTAL DATE:	SEPTEMBER 2018
SCALE:	

SOUTH AUSTIN REGIONAL WASTEWATER TREATMENT PLANT
ELECTRICAL SUBSTATION NO. 1 REPLACEMENT PROJECT
CIP I.D.# 3333.032

REVEGETATION PLAN

PROJECT NO: 2014-300 SHT. 46 OF 46 DWG NO. LP102

Development Services Department
JUL 10 2019