SHEET INDEX	
C-000	COVER
C-001	GENERAL NOTES
C-002	TRAVIS COUNTY NOTES
C-003	SURVEY NOTES
C-004	PROJECT OVERALL LAYOUT
C-100	EROSION & SEDIMENT CONTROL NOTES
C-101	EROSION & SEDIMENT CONTROL DETAILS
C-102 - C-105	EROSION & SEDIMENT CONTROL PLAN
C-200	TRAFFIC CONTROL NOTES
C-201 - C-204	TRAFFIC CONTROL PLAN
C-205 - C-214	PAVEMENT RESTORATION SHEETS
C-215 - C-218	TRAFFIC CONTROL DETAILS
C-300 - C-303	AWU GRID MAPS
C-304 - C-311	WATERLINE PLAN & PROFILES
C-312	RE-STRIPING PLANS
C-500 - C-508	STANDARD DETAILS

CITY OF AUSTIN,TEXAS
AUSTIN WATER

FDU # 3960-2207-7242
IFB # CLMC 748

HOWARD LANE
WATER MAIN EXTENSION
CIP NO. 6935.035
AW PROJECT # W-2018-0033

NOTES:

1. CONTRACTOR SHALL NOTIFY THE PUBLIC WORKS DEPARTMENT 24 HOURS PRIOR TO STARTING CONSTRUCTION OR CLEARING OPERATIONS.
2. CONTRACTOR SHALL CALL "ONE CALL" AT 1-800-344-8377 FOR UTILITY LOCATIONS AT LEAST 48 HOURS PRIOR TO ANY WORK IN CITY EASEMENTS OR STREET RIGHT OF WAYS.
3. THIS PROJECT IS LOCATED WITHIN THE GILLELAND CREEK & HARRIS BRANCH WATERSHED (CLASSIFIED AS URBAN) AND SHALL BE DEVELOPED, CONSTRUCTED, AND MAINTAINED IN ACCORDANCE WITH CHAPTER 25 OF THE CODE OF THE CITY OF AUSTIN.
4. NO PORTION OF THIS SITE IS LOCATED WITHIN PARKLAND OR LAND USED FOR PARK PURPOSES. (IF SUCH LAND IS INCLUDED, DOCUMENTATION OF PARKS AND RECREATION DEPT APPROVAL IS REQUIRED AT THE TIME OF SUBMITTAL FOR GENERAL PERMIT PROGRAM APPROVAL.)
5. NO PORTION OF THIS SITE IS LOCATED WITHIN THE 100-YEAR FLOODPLAIN, PER CITY OF AUSTIN AND FEDERAL EMERGENCY MANAGEMENT AGENCY FLOOD INSURANCE RATE MAPS (FEMA FIRM NO. 48453C0290J)
6. THE PROJECT IS NOT WITHIN THE EDWARDS AQUIFER RECHARGE ZONE AS DEFINED BY THE CITY OF AUSTIN. THE PROJECT IS NOT WITHIN THE EDWARDS AQUIFER RECHARGE ZONE AS REGULATED BY THE TEXAS COMMISSION ON ENVIRONMENTAL QUALITY (TCEQ).
7. THERE ARE NO CRITICAL ENVIRONMENTAL FEATURES WITHIN 150' OF ANY PORTION OF THIS PROJECT. A FIELD INVESTIGATION HAS NOT BEEN PERFORMED AS PART OF THIS PROJECT AND IS NOT REQUIRED.
8. THE STANDARD SHEETS INCLUDED IN THIS PLAN SET WERE PROVIDED BY THE GENERAL PERMIT PROGRAM OFFICE FOR USE ON GENERAL PERMIT PROJECTS ONLY. IF ANY MODIFICATIONS TO THE SHEETS WERE MADE, THEY ARE CLEARLY INDICATED ON THE SHEET ITSELF AND IN THE COVER SHEET INDEX.
9. ADDITIONAL TRENCH E/S CONTROL: TRIANGULAR SEDIMENT FILTER DIKE WILL BE INSTALLED ACROSS FILL WIDTH OF TRAFFIC CLOSURE AND DOWNSTREAM OF CONSTRUCTION AREA, PERPENDICULAR TO CURB. FILTER DIKE TO FOLLOW ACTIVE CONSTRUCTION. REMOVING AND RE-SETTING FILTER DIKE IS CONSIDERED SUBSIDIARY TO BARRICADES AND TRAFFIC HANDLING.
10. PROJECT SCHEDULE MUST BE APPROVED BY THE GENERAL PERMIT PROGRAM (GPP) COORDINATOR. INSTALLATION AND REMOVAL OF TEMPORARY AND PERMANENT EROSION/SEDIMENTATION CONTROLS MUST BE REFLECTED IN THE SCHEDULE, BY STATION NUMBER. GPP INSPECTOR MUST BE NOTIFIED A MINIMUM OF 48 HOURS IN ADVANCE OF TRANSITION BETWEEN PHASES.
11. APPROPRIATE EASEMENTS/APPROVALS MUST BE SECURED AND DOCUMENTED FOR PROJECT AREAS LOCATED OUTSIDE OF RIGHT OF WAYS. NO WORK SHALL BE PERFORMED WITHIN THESE AREAS UNTIL ASSOCIATED RIGHT OF ENTRY HAS BEEN SECURED. ADDITIONALLY, PROJECT PORTIONS IMPACTED BY LACK OF RECORDED DOCUMENT NUMBERS WILL NOT BE CONSIDERED FOR FORMAL GPP REVIEW.
12. CONTRACTOR SHALL STAKE ALL PROPOSED SERVICE CONNECTIONS LOCATED WITHIN THE CRITICAL ROOT ZONE OF TREES 8" IN CALIPER AND LARGER AT LEAST 21 CALENDAR DAYS PRIOR TO CONSTRUCTION OF SUCH SERVICES. STAKING SHALL CONSIST OF A LATH WITH NAIL AND PAINT MARKINGS. IN CASES WHERE A STAKE CANNOT BE PLACED WITHOUT DAMAGING PROPERTY, CONTRACTOR MAY USE PAINT ONLY. ONCE STAKING IS COMPLETED, IT IS THE CONTRACTOR'S RESPONSIBILITY TO INFORM THE CITY OF AUSTIN'S CONSTRUCTION INSPECTOR WITHIN TWENTY-FOUR HOURS. THE CITY OF AUSTIN'S CONSTRUCTION INSPECTOR WILL THEN COORDINATE A FIELD REVIEW OF THE SERVICE LOCATIONS WITH THE GENERAL PERMIT PROGRAM COORDINATOR AND PROPERTY OWNERS. SERVICE LINE LOCATIONS MAY BE ADJUSTED BASED ON THE REVIEW AND WILL BE RESTAKED BY THE CONTRACTOR AT NOT ADDITIONAL COST TO THE CONTRACT. ALL SERVICE LINE STAKING SHALL BE MAINTAINED UNTIL THE SERVICE IS INSTALLED.

GENERAL PERMIT PROGRAM CORRECTIONS RECORD

NO.	DESCRIPTION	BY	CORRECT (C), ADD (A), VOID (V), SHEET NOS.	TOTAL NO. OF SHEETS IN CORRECTION PLAN SET	CITY OF AUSTIN APPROVAL DATE	DATE IMAGED

LOCATION MAP

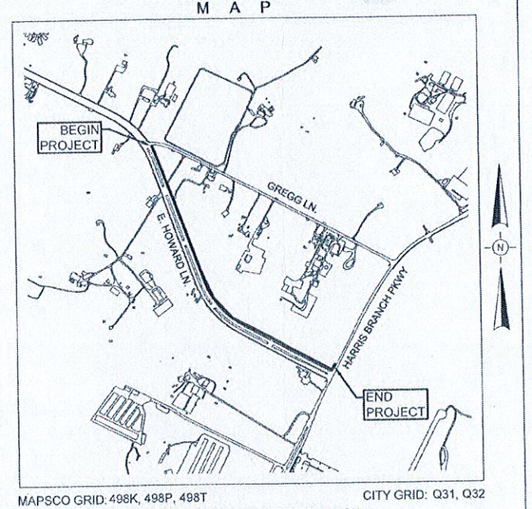

MAPSCO GRID: 498K, 498P, 498T CITY GRID: Q31, Q32
DRAINAGE BASIN(S): GILLELAND CREEK, HARRIS BRANCH
SCALE: N.T.S.

AWU PIPELINE ENGINEERING

PRESSURE ZONE: NORTH (NO1)
100 PSI TYPICAL

RELATED CASES:
UC TRACKING #: UCC-180524-01-01
ROW ID#: 19936124

Inspection Notice:
Please contact **Public Works, Construction Inspection Division** at 974-1939 for arrangements for payment of inspection fees and job assignment for inspection of the public utilities related to this site. Inspection fees must be paid before any pre-construction meeting can be held

PROJECT INFORMATION:

STREET ADDRESS:
HOWARD LANE FROM GREGG LANE TO HARRIS BRANCH PARKWAY
AUSTIN, TEXAS 78660

OWNER:
CITY OF AUSTIN
AUSTIN WATER
P.O. BOX 1088
AUSTIN, TEXAS 78767
ATTN: JOE HOEPKEN, P.E.
512.972.1168

CONTACT:
BRENDA BAKER
PROJECT MANAGER
505 BARTON SPRING ROAD
SUITE 900
AUSTIN, TEXAS 78704
512.974.1175 (PHONE)
512.974.7222 (FAX)

SUBMITTAL PREPARED BY:

CONTACT:
LANCE PARISHER, P.E.
PHONE:
512.646.4327

CobbFendley
TBPE NO. F-274 / TBPLS NO. 10046701
505 EAST HUNTLAND DRIVE, SUITE 100
AUSTIN, TEXAS 78752
512.834.9798 | FAX 512.834.7727
WWW.COBBFENDLEY.COM

STATE OF TEXAS
JAMES LANCE PARISHER
106221
LICENSED
PROFESSIONAL ENGINEER

SUBMITTED FOR APPROVAL BY:
LANCE PARISHER, P.E. — MARCH 19, 2019
ENGINEER OF RECORD — DATE

APPROVED BY GENERAL PERMIT HOLDER:

Keith Panek, P.E, CFM — 3/19/19
FOR GENERAL PERMIT HOLDER — DATE

GP-18-0000-AWU (2 yr PERMIT) — 3/19/2019
ANNUAL GENERAL PERMIT NUMBER — DATE

APPROVALS:

FOR TRAVIS COUNTY — DATE

TRAVIS COUNTY PERMIT NO. — DATE

AUSTIN WATER UTILITY
EXPIRATION DATE
MAR 19 2022

TXDOT PERMIT NO. — DATE

Scott Resendez — 3/19/2019
FOR AUSTIN WATER UTILITY — DATE

CITY OF AUSTIN PARKS & RECREATION DEPARTMENT NUMBER MOU — DATE

APPROVAL FOR SITE DEVELOPMENT PERMIT:

4/25/19
GENERAL PERMIT PROGRAM COORDINATOR,
PLANNING AND DEVELOPMENT REVIEW DEPT. — DATE

GP-2018-0267.AWU
DEVELOPMENT PERMIT NO. — DATE

11/09/2018
SUBMITTAL DATE:

GENERAL PERMIT PROGRAM

AUSTIN WATER UTILITY GENERAL CONSTRUCTION NOTES

UPDATED: NOVEMBER 23, 2017

1. THE CITY STANDARD CONSTRUCTION SPECIFICATIONS CURRENT AT THE TIME OF BIDDING SHALL COVER MATERIALS AND METHODS USED TO DO THIS WORK.
2. CONTRACTOR MUST OBTAIN A STREET CUT PERMIT FROM AUSTIN TRANSPORTATION DEPARTMENT, RIGHT OF WAY MANAGEMENT DIVISION BEFORE BEGINNING CONSTRUCTION WITHIN THE RIGHT-OF-WAY OF A PUBLIC STREET OR ALLEY.
3. AT LEAST 48 HOURS BEFORE BEGINNING ANY WATER AND WASTEWATER CONSTRUCTION IN PUBLIC R.O.W. OR PUBLIC EASEMENT, THE CONTRACTOR SHALL NOTIFY AUSTIN TRANSPORTATION INSPECTION OR DEVELOPMENT SERVICES DEPARTMENT (DSD) INSPECTIONS AT THE NUMBER INDICATED ON THE PLANS BY THE AW PLAN REVIEWER.
4. THE CONTRACTOR SHALL CONTACT THE AUSTIN AREA "ONE CALL" SYSTEM AT 1-800-344-8377 FOR EXISTING UTILITY LOCATIONS PRIOR TO ANY EXCAVATION IN ADVANCE OF CONSTRUCTION. THE CONTRACTOR SHALL VERIFY THE LOCATIONS OF ALL UTILITIES TO BE EXTENDED, TIED TO, OR ALTERED, OR SUBJECT TO DAMAGE/INCONVENIENCE BY THE CONSTRUCTION OPERATIONS. THE CITY OF AUSTIN WATER AND WASTEWATER MAINTENANCE RESPONSIBILITY ENDS AT R.O.W./EASEMENT LINES.
5. NO OTHER UTILITY SERVICE/APPURTENANCES SHALL BE PLACED NEAR THE PROPERTY LINE, OR OTHER ASSIGNED LOCATION DESIGNATED FOR WATER AND WASTEWATER UTILITY SERVICE THAT WOULD INTERFERE WITH THE WATER AND WASTEWATER SERVICES.
6. THE CITY SPECIFICATION ITEM 509S WILL BE REQUIRED AS A MINIMUM TRENCH SAFETY MEASURE.
7. ALL MATERIALS TESTS ORDERED BY THE OWNER FOR QUALITY ASSURANCE PURPOSES, SHALL BE CONDUCTED BY AN INDEPENDENT LABORATORY AND FUNDED BY THE OWNER IN ACCORDANCE WITH CITY STANDARD SPECIFICATION ITEM 1804S.04.
8. PRESSURE TAPS SHALL BE ALLOWED ON A CASE BY CASE BASIS, AS DETERMINED BY THE DIRECTOR'S DESIGNEE. NORMALLY PRESSURE TAPS WILL BE ALLOWED ONLY IN THE FOLLOWING CASES: A) A TEST SHUT OUT INDICATES AN ADEQUATE SHUT OUT TO PERFORM THE WORK IS NOT FEASIBLE B) MORE THAN 30 CUSTOMERS OR A SINGLE CRITICAL CUSTOMER (AS DEFINED BY AUSTIN WATER) WOULD BE IMPACTED BY THE SHUT OUT OR C) THE EXISTING WATER LINE WARRANTS IT.
9. THRUST RESTRAINT SHALL BE IN ACCORDANCE WITH CITY STANDARD SPECIFICATION ITEM 510.3(22) AND SPL WW 27-A and WW 27-F.
10. FIRE HYDRANTS SHALL BE SET IN ACCORDANCE WITH CITY STANDARD SPECIFICATION ITEM 511S.4 AND SHALL BE PAINTED FLYNT ALUMINUM OR EQUAL. FIRE HYDRANTS AND ASSOCIATED VALVES, TEN (10) YEARS AND OLDER WILL BE REQUIRED TO BE REPLACED WITH A NEW FIRE HYDRANT AND APPERTENUNANCES.
11. WATER LINE TESTING AND STERILIZATION SHALL BE PERFORMED IN ACCORDANCE WITH CITY STANDARD SPECIFICATION ITEMS 510.3 (27)-(29). FORCE MAIN PRESSURE TESTING SHALL BE CONDUCTED AND FALL UNDER THE SPECIFICATIONS AS WATER LINES (PRESSURE PIPE) OR AT THE PRESSURES SHOWN ON THE APPROVED PLANS.
12. ALL MATERIAL USED ON THIS PROJECT MUST BE LISTED ON THE STANDARD PRODUCTS LISTING. ANY MATERIAL NOT LISTED HAS TO GO THROUGH THE REVIEW OF THE STANDARDS COMMITTEE FOR REVIEW AND APPROVAL PRIOR TO START OF PROJECT. TESTING AND EVALUATION OF PRODUCTS ARE REQUIRED BEFORE APPROVAL WILL BE GIVEN ANY CONSIDERATION.
13. WHEN WATER SERVICES ARE DAMAGED AND THE SERVICE MATERIAL IS PE, THE LINE SHALL BE REPAIRED ONLY BY HEAT FUSION WELD OR REPLACED THE FULL LENGTH WITH TYPE K COPPER MATERIAL. ANY TIME PB IS DAMAGED OR TAMPERED WITH IN ANY WAY, THE SERVICE LINE SHALL BE REPLACED FULL LENGTH WITH TYPE K COPPER MATERIAL. NOTE: FULL LENGTH IS FROM CORPORATION STOP TO METER.
14. WHEN AN EXISTING WATERLINE SHUT OUT IS NECESSARY AND POSSIBLE, THE CONTRACTOR SHALL NOTIFY THE CONSTRUCTION INSPECTOR WHO WILL THEN NOTIFY AUSTIN WATER DISPATCH AND THE AFFECTED CUSTOMERS A MINIMUM OF SEVENTY-TWO (72) HOURS IN ADVANCE.
15. THE CONTRACTOR SHALL NOTIFY THE CONSTRUCTION INSPECTOR SO THAT HE CAN NOTIFY THE AUSTIN WATER AT 972-0000 AT A MINIMUM OF 72 HOURS PRIOR TO RELOCATING ANY DOMESTIC OR FIRE DEMAND WATER METERS. THE CONTRACTOR SHALL CAREFULLY REMOVE ALL METERS AND METERS BOXES THAT ARE INDICATED TO BE RELOCATED OR SALVAGED. THE CONTRACTOR SHALL INSTALL THE REMOVED METER OR CITY PROVIDED METER AT THE NEW LOCATION INDICATED ON THE CONSTRUCTION PLANS.
16. WATER AND WASTE WATER SERVICES WILL NEED TO BE REPLACED UP TO THE MAIN. REPAIR COUPLINGS ARE NOT ALLOWED ON NEW INSTALLTIONS.
17. ALL MANHOLES IN UNPAVED AREAS PROVIDING DIRECT ACCESS TO A WASTEWATER LINE SHALL BE WATERTIGHT AND BEAR THE WORDING AND INSIGNIA FOR THE CITY OF AUSTIN.
18. THE CONTRACTOR SHALL VERIFY ALL VERTICAL AND HORIZONTAL LOCATIONS OF EXISTING UTILITIES, BELOW GROUND AND OVERHEAD, PRIOR TO STARTING ONSITE UTILITY WORK.
19. ALL WATER AND WASTEWATER MAINS SHALL BE INSTALLED IN ACCORDANCE WITH THE SEPARATION DISTANCES INDICATED IN CHAPTER 290 – DRINKING WATER STANDARDS, CHAPTER 217 – DESIGN CRITERIA FOR SEWERAGE SYSTEMS AMD CHAPTER 210 – DESIGN CRIERIA FOR RECLAIMED SYSTEMS OF TCEQ RULES.
20. CONTRACTOR'S PERSONNEL THAT PERFORM BUTT FUSION AND ELECTROFUSION ON OR TO HDPE PIPE AND FITTINGS MUST HAVE CURRENT QUALIFICATION TRAINING CERTIFICATE ISSUED BY MCELROY OR COMPARABLE TRAINING PROGRAM.
21. SHOP DRAWINGS SIGNED AND SEALED BY A PROFESSIONAL STRUCTURAL ENGINEER, REGISTERED IN THE STATE OF TEXAS, SHALL BE SUBMITTED FOR AUSTIN WATER APPROVAL FOR LARGE DIAMETER PRE-CAST MANHOLES, JUNCTION BOXES, WET WELLS, AND SIMILAR STRUCTURES. THE SHOP DRAWINGS SHALL INCLUDE FLOWLINE ELEVATIONS OF ALL INCOMING AND OUTGOING PIPES, ELEVATION OF TRANSITION FROM LARGE DIAMETER SECTIONS TO 48" ID SECTION, TOP OF MANHOLE ELEVATION, SURROUNDING GROUND ELEVATION, AS WELL AS SPECIAL CONSTRUCTION CONSIDERATIONS THAT ARE SPECIFIED IN THE CONTRACT DRAWINGS.
22. VALVE STEM EXTENSIONS SHALL CONSIST OF A SINGLE PIECE OF IRON ROD OF THE REQUIRED LENGTH WITH A SOCKET ON ONE END AND NUT ON THE OTHER.
23. ALL POTABLE WATER SYSTEM COMPONENTS INSTALLED AFTER JANUARY 4, 2014, SHALL BE ESSENTIALLY "LEAD FREE" ACCORDING TO THE US SAFE DRINKING WATER ACT. EXAMPLES ARE VALVES (CORPORATION STOP, CURB STOP, AND PRESSURE REDUCING), NIPPLES, BUSHINGS, PIPE, FITTINGS, BACKFLOW PREVENTERS AND FIRE HYDRANTS. TAPPING SADDLES AND 2 INCH AND LARGER GATE VALVES ARE THE ONLY COMPONENTS EXEMPT FROM THIS REQUIREMENT. COMPONENTS THAT ARE NOT CLEARLY IDENTIFIED BY THE MANUFACTURER AS MEETING THIS REQUIREMENT EITHER BY MARKINGS ON THE COMPONENT OR ON THE PACKAGING SHALL NOT BE INSTALLED.
24. ALL FIRE HYDRANTS AND VALVES THAT ARE TO BE ABANDONED SHALL BE REMOVED, SALVAGED AND RETURNED TO AUSTIN WATER. NOTICE SHOULD BE GIVEN 48 HOURS PRIOR TO RETURN TO: PIPELINE OPERATIONS DISTRIBUTION SYSTEM MAINTENANCE, VALVES AND HYDRANT SERVICES, SUPERVISING AW PIPELINE TECHNICIAN AT 512-972-1133
25. ALL EXISTING WATER METERS IDENTIFIED TO BE RELOCATED OR ABANDONED AT THE DEVELOPMENT, SHALL BE REMOVED FROM THE METER BOX PRIOR TO CONSTRUCTION AND GIVEN IMMEDIATELY TO THE DSD INSPECTOR.
26. THE ENGINEER SHALL CALL OUT THE SIZE, TYPE AND USE (DOMESTIC OR IRRIGATION) OF ALL EXISTING WATER METERS TO BE RELOCATED OR REPURPOSED. WATER METER NUMBERS WILL NOT BE REQUIRED TO BE PLACED ON THE PLAN SHEET. A SEPARATE AUSTIN WATER TAPS OFFICE FORM WILL BE USED TO PROVIDE RELEVANT INFORMATION FOR THE EXISTING INFORMATION ON EXISTING METERS TO RECEIVE APPROPRIATE CREDITS. THIS FORM SHALL BE DIRECTLY SUBMITTED TO AUSTIN WATER TAPS OFFICE FOR REVIEW AND PROCESSING.
27. NO CONNECTION MAY BE MADE BETWEEN THE PRIVATE PLUMBING AND AUSTIN WATER INFRASTRUCTURE UNTIL A CITY APPROVED WATER METER HAS BEEN INSTALLED.
28. ALL GRAVITY LINES SHALL BE INSTALLED DOWNSTREAM TO UPSTREAM.
29. METER BOXES AND CLEAN OUTS SHALL NOT BE LOCATED WITHIN PAVED AREAS SUCH AS DRIVEWAYS AND SIDEWALKS.
30. PROTECTED STREET STATUS IS SUBJECT TO CHANGE OVER TIME. IT IS THE OWNER'S RESPONSIBILITY TO CONFIRM THE STREET STATUS PRIOR TO CONSTRUCTION AS PROTECTED STREET STATUS WILL DIRECTLY IMPACT THE CONSTRUCTION COSTS. IF PROTECTED STREETS ARE PROPOSED TO BE DISTURBED, APPROVAL FROM THE STREET AND BRIDGE DIVISION OF THE TRANSPORTATION DEPARTMENT IS REQUIRED.

WATER METER REMOVAL AND RELOCATION REQUIREMENTS

1. ALL EXISTING WATER METER, RECOGNIZED TO BE RELOCATED OR ABANDONED AT RESIDENTIAL AND/OR COMMERCIAL DEVELOPMENTS BY THE ENGINEER OF RECORD, SHALL BE REMOVED FROM THE METER BOX(ES) PRIOR TO CONSTRUCTION AND GIVEN IMMEDIATELY TO THE UTILITY INSPECTOR. THE UTILITY INSPECTOR WILL THEN TURN IN THE WATER METER(S) TO AWU CONSUMER SERVICES TAPS OFFICE FOR CREDIT WITHIN FIVE (5) BUSINESS DAYS OF RECEIPT OF THE WATER METER(S). BEFORE ANY LARGE (3" AND ABOVE) METER(S) ARE REVOCED, THE UTILITY INSPECTOR WILL SCHEDULE THE TIME AND PLACE OF THE METER DELIVERY WITH THE AWU TAPS OFFICE AND METER SHOP, AND PROVIDE THE CONTRCTOR WITH THAT INFORMATION. AT THE PRE-CONSTRUCTION MEETING THE CITY INSPECTOR SHALL VERIFY THAT THE METER NUMBER DISPLAYED ON THE METER COVER AT ITS PHYSICAL LOCATION IS THE SAME METER NUMBER LISTED ON THE APPROVED ENGINEERING DRAWINGS. THE CORRECT METER NUMBER(S) AT THE SITE ADDRESS SHALL BE INCLUDED ON THE PLANS AND PHYSICALLY VERIFIED BY THE ENGINEER OF RECORD. THE ENGINEER OF RECORD SHALL CONTACT AN AWU TAPS CUSTOMER SERVICE REPRESENTATIVE TO CONFIRM THE METER INFORMATION ON THE PLAN MATCHES UTILITY RECORDS.
2. IF WATER SERVICE IS REQUIRED DURING CONSTRUCTION, THE CONTRACTOR WILL CALL CITY OF AUSTIN UTILITIES TO ESTABLISH AN ACTIVE UTILITY ACCOUNT. ONCE SERVICE IS AVAILABLE TO THE SITE, AND ALL APPLICABLE TAP FEES HAVE BEEN PAID, A NEW WATER METER SHALL BE ISSUED TO BE INSTALLED IN ORDER TO ENSURE ACCURATE CALIBRATION OF THE WATER METER(S) TO BE USED FOR THE SITE. UNDER NO CIRCUMSTANCES SHALL AN EXISTING WATER METER BE USED DURING CONSTRUCTION OR RELOCATED TO ANOTHER LOCATION AND/OR ADDRESS WITHOUT PRIOR SUBMITTAL OF A WRITTEN REQUEST FOR EXCEPTION AND SUBSEQUENT WRITTEN APPROVAL FROM THE TAPS OFFICE.

ADDITIONAL NOTES

1. TRENCH CONDITIONS (EXCERPT FROM COA STANDARD SPECIFICATION 510.3.9)
   - 1.1. WHERE THE SOIL ENCOUNTERED AT ESTABLISHED FOOTING GRADE IS QUICKSAND, SATURATED OR UNSTABLE MATERIAL, THE FOLLOWING PROCEDURE SHALL BE USED UNLESS OTHER METHODS ARE INDICATED:
     - 1.1.1. ALL UNSTABLE SOILS SHALL BE REMOVED TO A DEPTH OF A MINIMUM 2 FEET BELOW BOTTOM OF PIPED UTILITY OR AS REQUIRED TO STABILIZE THE TRENCH FOUNDATION. SUCH EXCAVATION SHALL BE CARRIED OUT FOR THE ENTIRE TRENCH WIDTH.
     - 1.1.2. ALL UNSTABLE SOIL SO REMOVED SHALL BE REPLACED WITH A CONCRETE SEAL, FOUNDATION ROCK OR COARSE AGGREGATE MATERIALS PLACED ACROSS THE ENTIRE TRENCH WIDTH IN UNIFORM LAYERS NOT TO EXCEED 6 INCHES, LOOSE MEASURE AND COMPACTED BY MECHANICAL TAMPING OR OTHER MEANS WHICH SHALL PROVIDE A STABLE FOUNDATION FOR THE UTILITY.
     - 1.1.3. FORMS, SHEATHING AND BRACING, PUMPING, ADDITIONAL EXCAVATION AND BACKFILL REQUIRED IN UNSTABLE TRENCH CONDITIONS SHALL BE INCLUDED IN THE UNIT PRICE BID FOR PIPE.

REVIEWED
MAR 0 5 2019
Austin Water Utility

REV. NO.	REVISION DESCRIPTION	APPROVED BY:	DATE

CobbFendley
TBPE NO. 274 / TBPLS NO. 10046701
505 EAST HUNTLAND DRIVE, SUITE 100
AUSTIN, TEXAS 78752
512.834.9798 | FAX 512.834.7727
WWW.COBBFENDLEY.COM

GENERAL NOTES
HOWARD LANE WATER MAIN EXTENSION
AUSTIN, TX

CITY OF AUSTIN FOUNDED 1839

PROJ. NO. 1712-045-01
DESIGN: K. VAN HOOSIER
DRAWN: K. VAN HOOSIER
CHECK: L. PRINCE
APPR: L. PARISHER
DATE: OCTOBER 5, 2018

STATE OF TEXAS
JAMES LANCE PARISHER
106221
LICENSED
PROFESSIONAL ENGINEER
10/5/2018

THESE DESIGN DOCUMENTS ARE NOT TO BE USED FOR CONSTRUCTION PRIOR TO REGULATORY SIGNATURE AND PERMIT.

SHEET
C-001

Dwg Info: G:\CFA\2017\1204501_Howard_Lane_Water_Main\DESIGN\C-002-GNOT.dwg – Tab: GENERAL NOTES – Plotted: 10/5/2018 3:42 PM By: KRISTEN VAN HOOSIER

TRAVIS COUNTY SITE CONSTRUCTION NOTES

1. DRIVEWAY AND DRAINAGE CONSTRUCTION STANDARDS SHALL BE IN ACCORDANCE WITH THE REQUIREMENTS OF THE TRAVIS COUNTY STANDARDS UNLESS OTHERWISE SPECIFIED AND APPROVED BY TRAVIS COUNTY.
2. PRIOR TO BEGINNING ANY CONSTRUCTION, A TRAVIS COUNTY BASIC DEVELOPMENT PERMIT SHALL BE OBTAINED AND POSTED ON THE JOB SITE. DEVELOPMENT OUTSIDE OF APPROVED CONSTRUCTION BOUNDARIES IS PROHIBITED WITHOUT A REVISED PERMIT.
3. PRIOR TO BEGINNING ANY CONSTRUCTION, THE TEMPORARY EROSION CONTROL ITEMS SHALL BE IN PLACE.
4. A TRAFFIC CONTROL PLAN SHALL BE REVIEWED AND APPROVED BY TRAVIS COUNTY PRIOR TO BEGINNING CONSTRUCTION WITHIN COUNTY RIGHT-OF-WAY.
5. THE CONTRACTOR SHALL NOTIFY TRAVIS COUNTY AT 512-854-9383 (PLANNING AND ENGINEERING SERVICES DIVISION) AT LEAST 48 HOURS PRIOR TO START OF CONSTRUCTION AND TO SCHEDULE A MANDATORY PRECONSTRUCTION CONFERENCE.
6. CONTOUR DATA SOURCE: FIELD SURVEY
7. CONTRACTOR SHALL NOT STOCKPILE MATERIAL WITHIN THE 100-YEAR FLOOD PLAIN OR AREAS OUTSIDE OF PERMIT BOUNDARIES. ANY REGULATORY PERMITS REQUIRED FOR DISPOSAL OF EXCESS EXCAVATED MATERIAL OFF THE PERMIT SITE MUST BE OBTAINED FROM THE APPLICABLE JURISDICTIONS. DISPOSAL OF SOLID WASTE MATERIALS, AS DEFINED BY STATE LAW (LITTER, TIRES, DECOMPOSABLE WASTES, ETC.) IS PROHIBITED IN PERMANENT FILL SITES.
8. WITHIN TRAVIS COUNTY RIGHT-OF-WAY, DRIVEWAYS ARE TO BE CONSTRUCTED IN ACCORDANCE WITH CITY OF AUSTIN CRITERIA, EXCEPT AS NOTED IN 82.302 (G) OF THE STANDARDS.
9. THE DESIGN ENGINEER IS RESPONSIBLE FOR THE ADEQUACY OF THE CONSTRUCTION PLANS. IN REVIEWING THE CONSTRUCTION PLANS, TRAVIS COUNTY WILL RELY UPON THE ADEQUACY OF THE WORK OF THE DESIGN ENGINEER.
10. A MINIMUM OF TWO SURVEY BENCHMARKS SHALL BE SET AND DESCRIBED PER SUBDIVISION INCLUDING DESCRIPTION, LOCATION, AND ELEVATION. TIE TO TRAVIS COUNTY STANDARDS WHEN POSSIBLE.
11. ANY EXISTING PAVEMENT, CURBS, SIDEWALKS, OR DRAINAGE STRUCTURES WITHIN COUNTY RIGHT-OF-WAY WHICH ARE DAMAGED, REMOVED, OR SILTED, WILL BE REPAIRED BY THE CONTRACTOR AT HIS/HER EXPENSE BEFORE APPROVAL OF THE CONSTRUCTION.
12. THE ONE-CALL UTILITY SYSTEM WILL BE USED: DIAL 1-800-545-6005 AND THE TEXAS UNDERGROUND FACILITY NOTIFICATION CORPORATION AT LEAST 48 HOURS BEFORE YOU DIG.
13. ALL STORM SEWER PIPES SHALL BE CLASS III RCP, UNLESS OTHERWISE NOTED.
14. CONTRACTOR IS REQUIRED TO OBTAIN A TRAVIS COUNTY WORK IN RIGHT-OF-WAY (UTILITY INSTALLATION NOTICE) PERMIT PRIOR TO ANY CONSTRUCTION OF UTILITIES WITHIN ANY TRAVIS COUNTY RIGHT-OF-WAY.
15. THIS PROJECT IS LOCATED ON FLOOD INSURANCE RATE MAP 48453C0295H.
16. SOIL DATA SOURCES: GEOTECHNICAL INVESTIGATION PROVIDED BY FUGRO DATED 12/05/2014. SEE PROJECT MANUAL FOR REPORT.
17. ALL TREES WITHIN THE RIGHT-OF-WAY AND DRAINAGE EASEMENTS SHALL BE SAVED OR REMOVED IN ACCORDANCE WITH THE APPROVED CONSTRUCTION PLANS.
18. A PRECONSTRUCTION CONFERENCE IS REQUIRED WITH TNR PRIOR TO START OF ANY CONSTRUCTION IN TRAVIS COUNTY RIGHT-OF-WAY.
19. THE UTILITY CONTRACTOR SHALL GIVE TNR AT LEAST 48 HOURS NOTICE PRIOR TO CONSTRUCTION.
20. CONTRACTOR SHALL KEEP THE TNR PLANNING AND ENGINEERING SERVICES DIVISION (512-854-9383) CURRENT ON THE STATUS OF EACH STAGE OF CONSTRUCTION ACTIVITY.
21. TNR APPROVAL OF THE CONSTRUCTION IS REQUIRED ON ALL WORK COMPLETED PRIOR TO ACCEPTANCE AND COMMENCEMENT OF ONE-YEAR PERFORMANCE PERIOD.
22. THE CONTRACTOR SHALL INSTALL ALL TRAFFIC MARKING AND SIGNAGE PER CURRENT TXDOT MANUAL OF UNIFORM TRAFFIC CONTROL DEVICES PRIOR TO TNR APPROVAL.

TRAVIS COUNTY SWP3 NOTES

1. ALL CONSTRUCTION ACTIVITIES DISTURBING ONE ACRE AND GREATER MUST OBTAIN STORM WATER DISCHARGE AUTHORIZATION FROM THE TEXAS COMMISSION ON ENVIRONMENTAL QUALITY (TCEQ), THROUGH COMPLIANCE WITH TCEQ'S GENERAL PERMIT #TXR150000. THE PRIMARY CONSTRUCTION SITE OPERATOR(S) [PCSO] MUST PREPARE AND IMPLEMENT AN SWP3 THROUGHOUT CONSTRUCTION WHICH INCLUDES THE EROSION AND SEDIMENT CONTROL (ESC) PLAN AND OTHER BEST MANAGEMENT PRACTICES (BMPS) SPECIFIED IN THESE PLANS APPROVED BY TRAVIS COUNTY.
2. SMALL CONSTRUCTION ACTIVITIES DISTURBING BETWEEN ONE AND FIVE ACRES SHALL POST A TCEQ CONSTRUCTION SITE NOTICE (CSN) ON SITE PRIOR TO COMMENCING CONSTRUCTION. LARGE CONSTRUCTION ACTIVITIES DISTURBING FIVE ACRES OR GREATER SHALL SUBMIT A NOTICE OF INTENT (NOI) TO TCEQ AND POST THE NOI ON SITE AT LEAST SEVEN (7) DAYS PRIOR TO BEGINNING CONSTRUCTION. NOTICES POSTED MUST BE MAINTAINED THROUGHOUT CONSTRUCTION.
3. TRAVIS COUNTY IS OPERATOR OF THE SMALL MUNICIPAL SEPARATE STORM SEWER SYSTEM (MS4) RECEIVING STORM WATER DISCHARGES FROM THIS PROJECT, UNDER TCEQ MS4 PERMIT #TXR040327. UPON REQUEST BY TRAVIS COUNTY, THE PCSO SHALL PROVIDE A COPY OF THE NOI AND CSN; THE SWP3; AND REGULARLY PROVIDE COPIES OF THE SWP3 INSPECTION REPORTS, REQUIRED WEEKLY AND AFTER EVERY RAIN EVENTS THAT ARE 0.5 INCHES OR GREATER.
4. THE PCSO MUST REVISE THE SWP3 WHENEVER CHANGING SITE CONDITIONS, OR A CHANGE IN DESIGN, CONSTRUCTION, OPERATION, OR MAINTENANCE HAS A SIGNIFICANT EFFECT ON THE DISCHARGE OF POLLUTANTS NOT PREVIOUSLY ADDRESSED; OR WHEN RESULTS OF INSPECTIONS BY SITE OPERATORS, TRAVIS COUNTY, TCEQ, OR OTHER LOCAL AGENCY AUTHORIZED TO APPROVE ESC PLANS INDICATE THE SWP3 IS PROVING INEFFECTIVE IN ELIMINATING OR SIGNIFICANTLY MINIMIZING POLLUTANTS IN DISCHARGES FROM THE SITE.
5. TEMPORARY OR PERMANENT EROSION CONTROL AND STABILIZATION MEASURES MUST BE INITIATED AS SOON AS PRACTICABLE, AND AS SPECIFIED ON THE PLANS, IN PORTIONS OF THE SITE WHERE CONSTRUCTION ACTIVITIES HAVE TEMPORARILY OR PERMANENTLY CEASED. THESE MEASURES MUST BE INITIATED NO LATER THAN 14 DAYS AFTER CESSATION, UNLESS CONSTRUCTION ACTIVITIES WILL RESUME WITHIN 21 DAYS IN THE AREA.
6. UPON FINAL STABILIZATION OF THE ENTIRE SITE, INCLUDING COMPLETION OF ALL STABILIZATION REQUIREMENTS OF THE APPROVED PLANS AND PERMIT AS VERIFIED BY TRAVIS COUNTY, THE PCSO SHALL SUBMIT A NOTICE OF TERMINATION (NOT) TO TCEQ.
7. THE SWP3 MUST BE WRITTEN BY AN INDIVIDUAL WITH EITHER A PE LICENSE OR CPESC CERTIFICATION.
8. ONLY AN INDIVIDUAL WITH A CPESC, CESSWI, CISEC CERTIFICATION OR PE LICENSE MAY COMPLETE A SW INSPECTION IN TRAVIS COUNTY.

GENERAL PERMIT GENERAL CONSTRUCTION NOTES

1. CONTRACTOR MUST OBTAIN UTILITY EXCAVATION PERMITS, FOR EACH RIGHT-OF-WAY EXCAVATED, FROM THE CITY OF AUSTIN PUBLIC WORKS DEPARTMENT – CONSTRUCTION INSPECTION DIVISION (512-974-7265) PRIOR TO COMMENCEMENT OF WORK. CONTRACTOR SHALL PROVIDE A ONE CALL CENTER CONFIRMATION NUMBER.
2. PRIOR TO ANY DIRECTIONAL DRILLING OR BORING, CONTRACTOR MUST CONTACT THE CITY OF AUSTIN PUBLICS WORKS DEPARTMENT – CONSTRUCTION INSPECTION DIVISION (512-974-7161) TO SCHEDULE A MANDATORY PRE-BORE INSPECTION.
3. CITY OF AUSTIN UTILITIES REQUIRE A MINIMUM 2' (FOOT) VERTICAL AND 5' (FOOT) HORIZONTAL SEPARATION DISTANCE, MEASURED FROM OUTER DIAMETER TO OUTER DIAMETER. ANY VARIANCE FROM CITY UTILITIES MUST BE OBTAINED IN WRITING AND SUBMITTED TO THE CITY OF AUSTIN PUBLICS WORKS DEPARTMENT – CONSTRUCTION INSPECTION DIVISION (512-974-7265).
4. ALL STREET TRENCH REPAIRS ARE TO BE DONE IN ACCORDANCE WITH CITY OF AUSTIN STANDARD DETAILS FROM THE 1100 SERIES.
5. ALL TRENCH REPAIR IN UNFINISHED SURFACES TO BE DONE IN ACCORDANCE WITH CITY OF AUSTIN STANDARD DETAIL 510S-5.
6. FOR EXCAVATION WITHIN 100 FEET OF A MOONLIGHT TOWER OR WITHIN 100 FEET OF A GUY WIRE SUPPORTING A MOONLIGHT TOWER, EXCAVATION OR CONSTRUCTION PLANS AND SEQUENCING INFORMATION THAT DEMONSTRATES THAT THE MOONLIGHT TOWER WILL BE ADEQUATELY PROTECTED FROM DAMAGE DURING EXCAVATION OR CONSTRUCTION MUST BE SUBMITTED TO CITY OF AUSTIN – PUBLIC WORKS DEPARTMENT – AUSTIN ENERGY (512-505-7611).
7. VERIFY THE LOCATION OF UNDERGROUND UTILITIES AT LEAST 100' (FEET) IN ADVANCE OF ALL PROPOSED UTILITY CROSSINGS, AND ALSO LOCATIONS WHERE THE PROPOSED FACILITIES ARE DEPICTED TO RUN PARALLEL TO AND WITHIN FIVE FEET OF EXISTING FACILITIES.
8. CONTRACTOR SHALL NOTIFY THE DEPARTMENT OF PUBLIC WORKS AT 974-7161 PRIOR TO THE INSTALLATION OF ANY FACILITY WITHIN A DRAINAGE EASEMENT OR STREET R.O.W. THE METHODS OF PLACEMENT AND COMPACTION OF BACKFILL IN THE CITY'S R.O.W. MUST BE APPROVED PRIOR TO START OF THE BACKFILL OPERATION.
9. FOR SLOPES OR TRENCHES MORE THAN FIVE (5) FEET IN DEPTH, A NOTE MUST BE ADDED TO THE GENERAL CONSTRUCTION NOTES STATING THAT: "ALL CONSTRUCTION OPERATIONS SHALL BE ACCOMPLISHED IN ACCORDANCE WITH THE CITY OF AUSTIN STANDARD SPECIFICATIONS ITEM NO. 509 AND APPLICATION REGULATIONS OF THE U.S. OCCUPATIONAL SAFETY AND HEALTH ADMINISTRATION (OSHA)". COPIES OF THE OSHA STANDARDS MAY BE PURCHASED FROM THE U.S. GOVERNMENT PRINTING OFFICE, INFORMATION AND RELATED REFERENCE MATERIALS MAY BE PURCHASED FROM OSHA, 611 E. 6TH STREET, AUSTIN, TEXAS.

DEVELOPER INFORMATION

OWNER: AUSTIN WATER UTILITY
ADDRESS: 625 E. 10TH ST., AUSTIN, TX 78701
PHONE: (512) 972-0101

OWNER'S REPRESENTATIVE RESPONSIBLE FOR PLAN ALTERATIONS: LANCE PARISHER, P.E.

PHONE: (512) 834-9798

PERSON OR FIRM RESPONSIBLE FOR EROSION/SEDIMENTATION CONTROL MAINTENANCE:
JOSE I. GUERRA INC.
PHONE: (512) 445-2090

PERSON OR FIRM RESPONSIBLE FOR TREE/NATURAL AREA PROTECTION MAINTENANCE:
JOSE I. GUERRA INC.
PHONE: (512) 445-2090

REV. NO.	REVISION DESCRIPTION	APPROVED BY:	DATE

CobbFendley
TBPE NO. 274 / TBPLS NO. 10046701
505 EAST HUNTLAND DRIVE, SUITE 100
AUSTIN, TX 78752
512.834.9798 | FAX 512.834.7727
WWW.COBBFENDLEY.COM

TRAVIS COUNTY NOTES

HOWARD LANE WATER MAIN EXTENSION
AUSTIN, TX

PROJ. NO. 1712-045-01
DESIGN: K. VAN HOOSIER
DRAWN: K. VAN HOOSIER
CHECK: L. PRINCE
APPR: L. PARISHER
DATE: OCTOBER 5, 2018

STATE OF TEXAS
JAMES LANCE PARISHER
106221
LICENSED
PROFESSIONAL ENGINEER
10/5/2018

THESE DESIGN DOCUMENTS ARE NOT TO BE USED FOR CONSTRUCTION PRIOR TO REGULATORY SIGNATURE AND PERMIT.

SHEET
C-002

Dwg Info: G:\CFA\2017\1204501_Howard_Lane_Water_Main\DESIGN\C-002-GNOT.dwg – Tab: TRAVIS CO NOTES – Plotted: 3/19/2019 8:49 AM By: HEATHER BYRNE

NOTES:

HORZ.	DATUM:	NAD-83
VERT.	DATUM:	NAVD-88
COORD.	SYSTEM:	TEXAS COORDINATE SYSTEM NAD-83 (2011) epoch 2010.00
ZONE:		CENTRAL (4203)
UNITS:		U.S. SURVEY FEET

This project is referenced, for all bearing and coordinate basis, to the Texas Coordinate System, Central Zone (4203), North American Datum of 1983 (2011) epoch 2010.00.
All elevations shown hereon are North American Vertical Datum (NAVD) 88 and were derived from GPS observations.

REV NO.	REVISION DESCRIPTION	APPROVED BY:	DATE

CobbFendley
TBPE NO. 274 / TBPLS NO. 10046701
505 EAST HUNTLAND DRIVE, SUITE 100
AUSTIN, TEXAS 78752
512.834.9788 | FAX 512.834.7727
WWW.COBBFENDLEY.COM

SURVEY NOTES

HOWARD LANE WATER MAIN EXTENSION
AUSTIN, TX

CITY OF AUSTIN
FOUNDED 1839

PROJ. NO. 1712-045-01
DESIGN: K. VAN HOOSIER
DRAWN: K. VAN HOOSIER
CHECK: L. PRINCE
APPR: L. PARISHER
DATE: OCTOBER 5, 2018

STATE OF TEXAS
JAMES LANCE PARISHER
105221
LICENSED
PROFESSIONAL ENGINEER
10/5/2018

THESE DESIGN DOCUMENTS ARE NOT TO BE USED FOR CONSTRUCTION PRIOR TO REGULATORY SIGNATURE AND PERMIT.

SHEET
C-003

Dwg Info: G:\CFA\2017\1204501_Howard_Lane_Water_Main\DESIGN\C-002-GNOT.dwg – Tab: SURVEY NOTES – Plotted: 10/5/2018 3:43 PM By: KRISTEN VAN HOOSIER

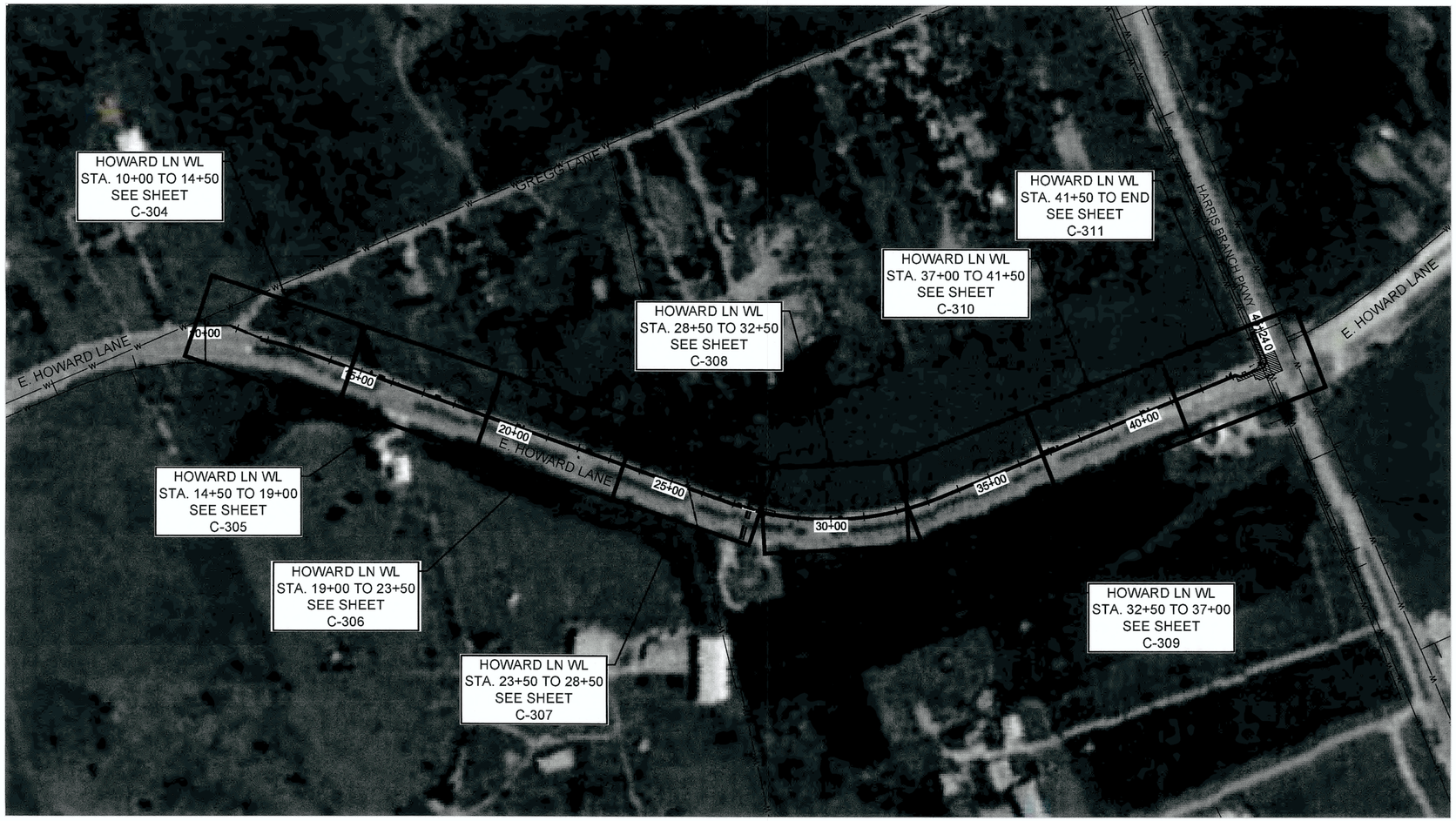

N

0 200' 400'
SCALE: 1" = 400'

AWU GRID #Q31-2, Q32-1, Q32-2, Q32-3

REV. NO.	REVISION DESCRIPTION	APPROVED BY:	DATE

CobbFendley
TBPE NO. 2147 / TBPLS NO. 10046701
505 EAST HUTCHINS DRIVE, SUITE 100
AUSTIN, TEXAS 78752
512.834.9798 | FAX 512.834.7727
WWW.COBBFENDLEY.COM

PROJECT OVERALL LAYOUT

HOWARD LANE WATER MAIN EXTENSION
AUSTIN, TX

CITY OF AUSTIN
FOUNDED 1839

PROJ. NO. 1712-045-01
DESIGN: K. VAN HOOSIER
DRAWN: K. VAN HOOSIER
CHECK: L. PRINCE
APPR: L. PARISHER
DATE: OCTOBER 5, 2018

STATE OF TEXAS
JAMES LANCE PARISHER
106221
LICENSED
PROFESSIONAL ENGINEER
10/5/2018

THESE DESIGN DOCUMENTS ARE NOT TO BE USED FOR CONSTRUCTION PRIOR TO REGULATORY SIGNATURE AND PERMIT.

SHEET
C-004
5 of 47

Dwg. Info: G:\CFA\2017\1204501_Howard_Lane_Water_Main\DESIGN\C-100-KEYM.dwg – Tab: LAYOUT – Plotted: 10/5/2018 3:44 PM By: KRISTEN VAN HOOSIER

CITY OF AUSTIN – STANDARD NOTES EROSION AND SEDIMENTATION CONTROL (MODIFIED FOR USE ON GENERAL PERMIT PROJECTS)

1. THE CONTRACTOR SHALL INSTALL EROSION/SEDIMENTATION CONTROLS AND TREE/NATURAL AREA PROTECTIVE FENCING PRIOR TO ANY SITE PREPARATION WORK (CLEARING, GRUBBING, OR EXCAVATION).

2. THE PLACEMENT OF EROSION/SEDIMENTATION CONTROLS SHALL BE IN ACCORDANCE WITH THE ENVIRONMENTAL CRITERIA MANUAL AND THE APPROVED EROSION AND SEDIMENTATION CONTROL PLAN.

3. THE PLACEMENT OF TREE/NATURAL AREA PROTECTIVE FENCING SHALL BE IN ACCORDANCE WITH THE CITY OF AUSTIN STANDARD NOTES FOR TREE AND NATURAL AREA PROTECTION AND THE APPROVED GRADING/TREE AND NATURAL AREA PLAN.

4. A PRE–CONSTRUCTION CONFERENCE SHALL BE HELD ON–SITE WITH THE CONTRACTOR, DESIGN ENGINEER, PERMIT APPLICANT, AND GENERAL PERMIT PROGRAM REPRESENTATIVE AFTER INSTALLATION OF THE EROSION/SEDIMENTATION CONTROLS AND THE TREE/NATURAL AREA PROTECTION MEASURES AND PRIOR TO BEGINNING ANY SITE PREPARATION WORK. THE CONTRACTOR SHALL NOTIFY THE GENERAL PERMIT PROGRAM OFFICE AT 512/974–6330, AT LEAST 3 DAYS PRIOR TO THE MEETING DATE.

5. ANY SIGNIFICANT VARIATION IN MATERIALS OR LOCATIONS OF CONTROLS OR FENCES FROM THOSE SHOWN ON THE APPROVED PLANS MUST BE APPROVED BY THE REVIEWING ENGINEER AND THE GENERAL PERMIT PROGRAM REPRESENTATIVE.

6. THE CONTRACTOR IS REQUIRED TO INSPECT THE CONTROLS AND FENCES AT DAILY INTERVALS AND AFTER SIGNIFICANT RAINFALL EVENTS TO INSURE THAT THEY ARE FUNCTIONING PROPERLY. THE PERSON(S) RESPONSIBLE FOR MAINTENANCE OF CONTROLS AND FENCES SHALL IMMEDIATELY MAKE ANY NECESSARY REPAIRS TO DAMAGED AREAS. SILT ACCUMULATION AT CONTROLS MUST BE REMOVED WHEN THE DEPTH REACHES SIX (6) INCHES. SILT ACCUMULATION AT INLET DEVICES SHOULD BE REMOVED WHEN THE DEPTH REACHES TWO (2) INCHES.

7. PRIOR TO FINAL ACCEPTANCE BY THE CITY, HAUL ROADS AND WATERWAY CROSSINGS CONSTRUCTED FOR TEMPORARY CONTRACTOR ACCESS MUST BE REMOVED, ACCUMULATED SEDIMENT REMOVED FROM THE WATERWAY AND THE AREA RESTORED TO THE ORIGINAL GRADE AND REVEGETATED. ALL LAND CLEARING DEBRIS SHALL BE DISPOSED OF IN APPROVED SPOIL DISPOSAL SITES.

8. ALL WORK MUST STOP IF A VOID IN THE ROCK SUBSTRATE IS DISCOVERED WHICH IS ONE SQUARE FOOT OR LARGER IN TOTAL AREA, BLOWS AIR FROM WITHIN THE SUBSTRATE, AND/OR CONSISTENTLY RECEIVES WATER DURING ANY RAIN EVENT. AT THIS TIME, IT IS THE RESPONSIBILITY OF THE PROJECT MANAGER TO IMMEDIATELY CONTACT THE GENERAL PERMIT PROGRAM REPRESENTATIVE FOR FURTHER INVESTIGATION.

9. FIELD REVISIONS TO THE EROSION/SEDIMENTATION CONTROL PLAN MAY BE REQUIRED BY THE GENERAL PERMIT PROGRAM REPRESENTATIVE DURING THE COURSE OF CONSTRUCTION TO CORRECT CONTROL INADEQUACIES. ANY REVISIONS TO THE PERMITTED PLAN MUST BE APPROVED BY THE GENERAL PERMIT PROGRAM OFFICE OF THE PLANNING AND DEVELOPMENT REVIEW DEPARTMENT.

10. PERMANENT EROSION/SEDIMENTATION CONTROL: ALL DISTURBED AREAS SHALL BE RESTORED IN ACCORDANCE WITH THE CONTRACT DOCUMENTS. WHERE THE CRITERIA MANUAL AND CONTRACT DOCUMENTS DIFFER THE MOST ENVIRONMENTALLY BENEFICIAL MATERIALS/METHOD SHALL BE REQUIRED UNLESS OTHERWISE APPROVED BY THE GENERAL PERMIT PROGRAM REPRESENTATIVE.

11. DEVELOPER INFORMATION:

OWNER:
CITY OF AUSTIN
JOE HOEPKEN, P.E., PROJECT MANAGER
PHONE: (512) 972–1168

OWNER'S REPRESENTATIVE RESPONSIBLE FOR PLAN ALTERATIONS:
COMPANY: COBBFENDLEY
CONTACT: LANCE PARISHER, P.E.
ADDRESS: 505 E. HUNTLAND DRIVE, SUITE 100
AUSTIN, TX 78752
PHONE: (512) 834–9798
E–MAIL: LPARISHER@COBBFENDLEY.COM

PARTY RESPONSIBLE FOR EROSION/SEDIMENTATION CONTROL MAINTENANCE:
COMPANY: CONTRACTOR

PARTY RESPONSIBLE FOR TREE/NATURAL AREA PROTECTION MAINTENANCE:
COMPANY: CONTRACTOR

12. THE CONTRACTOR SHALL NOT DISPOSE OF SURPLUS EXCAVATED MATERIAL FROM THE SITE WITHOUT NOTIFYING THE GENERAL PERMIT PROGRAM REPRESENTATIVE, AT 974–6330, AT LEAST 48 HOURS PRIOR TO THE SPOILS REMOVAL. THIS NOTIFICATION SHALL INCLUDE THE DISPOSAL LOCATION AND A COPY OF THE PERMIT ISSUED TO RECEIVE THE MATERIAL.

13. INLET PROTECTION SHALL BE INSTALLED IMMEDIATELY PRIOR TO STREET WORK, AND WILL BE REMOVED AS SOON AS THE GENERAL PERMIT PROGRAM REPRESENTATIVE AGREES THAT THERE IS NO POTENTIAL FOR SEDIMENTATION.

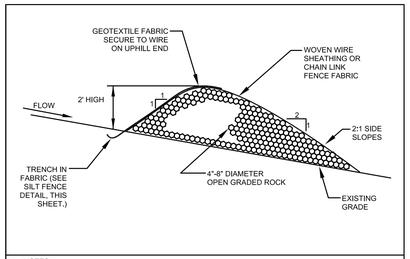

NOTES:
1. USE ONLY OPEN GRADED ROCK, 4-8 INCH DIAMETER, FOR STREAM FLOW CONDITION. USE OPEN GRADED ROCK, 3-5 INCH DIAMETER, FOR OTHER CONDITIONS.
2. ROCK BERM SHALL BE SECURED WITH A WOVEN WIRE SHEATHING HAVING MAXIMUM 1 INCH OPENING AND MINIMUM WIRE DIAMETER OF 20 GAUGE.
3. ROCK BERM SHALL BE INSPECTED WEEKLY OR AFTER EACH RAIN, AND THE STONE AND/OR FABRIC CORE-WOVEN WIRE SHEATHING SHALL BE REPLACED WHEN THE STRUCTURE CEASES TO FUNCTION AS INTENDED, DUE TO SILT ACCUMULATION AMONG THE ROCKS, WASHOUT, CONSTRUCTION TRAFFIC DAMAGE, ETC.
4. WHEN SILT REACHES A DEPTH EQUAL TO ONE-THIRD THE HEIGHT OF THE BERM OR ONE FOOT, WHICHEVER IS LESS, THE SILT SHALL BE REMOVED AND DISPOSED OF IN AN APPROVED SITE AND IN A MANNER AS TO NOT CREATE A SILTATION PROBLEM.
5. DAILY INSPECTION SHALL BE MADE ON SEVERE SERVICE ROCK BERMS; SILT SHALL BE REMOVED WHEN ACCUMULATION REACHES 6 INCHES.
6. WHEN SITE IS COMPLETELY STABILIZED, THE BERM AND ACCUMULATED SILT SHALL BE REMOVED AND DISPOSED OF IN AN APPROVED MANNER.

CITY OF AUSTIN WATERSHED PROTECTION DEPARTMENT	FABRIC COVERED (SERVICE SEVERE) ROCK BERM	
GENERAL PERMIT PROGRAM ADOPTED	THE ARCHITECT/ENGINEER ASSUMES RESPONSIBILITY FOR APPROPRIATE USE OF THIS STANDARD.	STANDARD NO. N/A

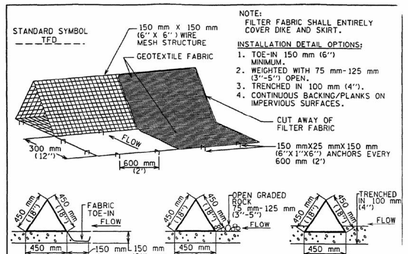

NOTE:
FILTER FABRIC SHALL ENTIRELY COVER DIKE AND SKIRT.

INSTALLATION DETAIL OPTIONS:
1. TOE-IN 150 mm (6") MINIMUM.
2. WEIGHTED WITH 75 mm-125 mm (3"-5") OPEN.
3. TRENCHED IN 100 mm (4").
4. CONTINUOUS BACKING/PLANKS ON IMPERVIOUS SURFACES.

GENERAL NOTES
1. DIKES SHALL BE PLACED IN A ROW WITH ENDS TIGHTLY ABUTTING THE ADJACENT DIKE.
2. THE FABRIC COVER AND SKIRT SHALL BE A CONTINUOUS WRAPPING OF GEOTEXTILE. THE SKIRT SHALL BE A CONTINUOUS EXTENSION OF THE FABRIC ON THE UPSTREAM FACE.
3. THE SKIRT SHALL BE WEIGHTED WITH A CONTINUOUS LAYER OF 75-125 mm (3-5") OPEN GRADED ROCK OR TOED-IN 150 mm (6") WITH MECHANICALLY COMPACTED MATERIAL. OTHERWISE, THE ENTIRE STRUCTURE SHALL BE TRENCHED IN 100 mm (4").
4. DIKES AND SKIRT SHALL BE SECURELY ANCHORED IN PLACE USING 150 mm (6") WIRE STAPLES ON 600 mm (2') CENTERS ON BOTH EDGES AND SKIRT, OR STAKE USING 10M (3/8") DIAMETER RE-BAR WITH TEE ENDS.
5. FILTER MATERIAL SHALL BE LAPPED OVER ENDS 150 mm (6") TO COVER DIKE TO DIKE JOINTS. JOINTS SHALL BE FASTENED WITH GALVANIZED SHOAT RINGS.
6. THE DIKE STRUCTURE SHALL BE M#40-150 mmX150 mm (6 GA. 6"X6") WIRE MESH, 450 mm (18") ON A SIDE.
7. INSPECTION SHALL BE MADE WEEKLY OR AFTER EACH RAINFALL EVENT AND REPAIR OR REPLACEMENT SHALL BE MADE PROMPTLY AS NEEDED BY THE CONTRACTOR.
8. ACCUMULATED SILT SHALL BE REMOVED WHEN IT REACHES A DEPTH OF 150 mm (6") AND DISPOSED OF IN A MANNER WHICH WILL NOT CAUSE ADDITIONAL SILTATION.
9. AFTER THE DEVELOPMENT SITE IS COMPLETLY STABILIZED, THE DIKES AND ANY REMAINING SILT SHALL BE REMOVED. SILT SHALL BE DISPOSED OF AS INDICATED IN GENERAL NOTE 8 ABOVE.

CITY OF AUSTIN WATERSHED PROTECTION DEPARTMENT	TRIANGULAR SEDIMENT FILTER DIKE	
3-27-00 ADOPTED	THE ARCHITECT/ENGINEER ASSUMES RESPONSIBILITY FOR APPROPRIATE USE OF THIS STANDARD.	STANDARD NO. 628S

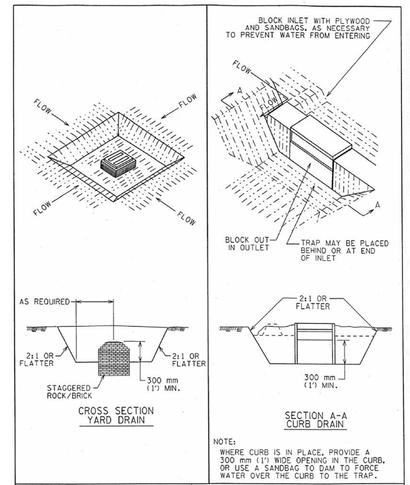

NOTE:
WHERE CURB IS IN PLACE, PROVIDE A 300 mm (1') WIDE OPENING IN THE CURB, OR USE A SANDBAG TO DAM TO FORCE WATER OVER THE CURB TO THE TRAP.

CITY OF AUSTIN WATERSHED PROTECTION DEPARTMENT	STORM INLET SEDIMENT TRAP	
3-27-00 ADOPTED	THE ARCHITECT/ENGINEER ASSUMES RESPONSIBILITY FOR APPROPRIATE USE OF THIS STANDARD.	STANDARD NO. 632S-1

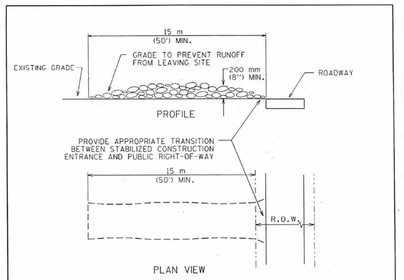

NOTES:
1. STONE SIZE: 75-125 mm (3-5") OPEN GRADED ROCK.
2. LENGTH: AS EFFECTIVE BUT NOT LESS THAN 15 m (50').
3. THICKNESS: NOT LESS THAN 200 mm (8").
4. WIDTH: NOT LESS THAN FULL WIDTH OF ALL POINTS OF INGRESS/EGRESS.
5. WASHING: WHEN NECESSARY, VEHICLE WHEELS SHALL BE CLEANED TO REMOVE SEDIMENT PRIOR TO ENTRANCE ONTO PUBLIC ROADWAY. WHEN WASHING IS REQUIRED, IT SHALL BE DONE ON AN AREA STABILIZED WITH CRUSHED STONE AND DRAINS INTO AN APPROVED TRAP OR SEDIMENT BASIN. ALL SEDIMENT SHALL BE PREVENTED FROM ENTERING ANY STORM DRAIN, DITCH OR WATERCOURSE USING APPROVED METHODS.
6. MAINTENANCE: THE ENTRANCE SHALL BE MAINTAINED IN A CONDITION THAT WILL PREVENT TRACKING OR FLOWING OF SEDIMENT ONTO PUBLIC ROADWAY. THIS MAY REQUIRE PERIODIC TOP DRESSING WITH ADDITIONAL STONE AS CONDITIONS DEMAND, AS WELL AS REPAIR AND CLEAN OUT OF ANY MEASURE DEVICES USED TO TRAP SEDIMENT. ALL SEDIMENTS THAT IS SPILLED, DROPPED, WASHED OR TRACKED ONTO PUBLIC ROADWAY MUST BE REMOVED IMMEDIATELY.
7. DRAINAGE: ENTRANCE MUST BE PROPERLY GRADED OR INCORPORATE A DRAINAGE SWALE TO PREVENT RUNOFF FROM LEAVING THE CONSTRUCTION SITE.

CITY OF AUSTIN WATERSHED PROTECTION DEPARTMENT	STABILIZED CONSTRUCTION ENTRANCE	
5-28-00 ADOPTED	THE ARCHITECT/ENGINEER ASSUMES RESPONSIBILITY FOR APPROPRIATE USE OF THIS STANDARD.	STANDARD NO. 641S-1

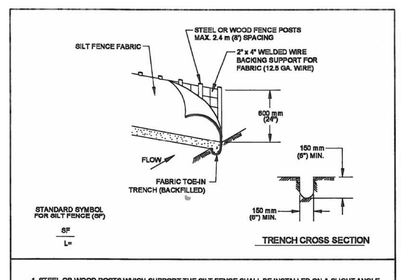

1. STEEL OR WOOD POSTS WHICH SUPPORT THE SILT FENCE SHALL BE INSTALLED ON A SLIGHT ANGLE TOWARD THE ANTICIPATED RUNOFF SOURCE. POST MUST BE EMBEDDED A MINIMUM OF 300 mm (12 INCHES). IF WOOD POSTS CANNOT ACHIEVE 300 mm (12 inches) DEPTH, USE STEEL POSTS.

2. THE TOE OF THE SILT FENCE SHALL BE TRENCHED IN WITH A SPADE OR MECHANICAL TRENCHER, SO THAT THE DOWNSLOPE FACE OF THE TRENCH IS FLAT AND PERPENDICULAR TO THE LINE OF FLOW.

3. THE TRENCH MUST BE A MINIMUM OF 150 mm (6 inches) DEEP AND 150 mm (6 inches) WIDE TO ALLOW FOR THE SILT FENCE FABRIC TO BE LAID IN THE GROUND AND BACKFILLED WITH COMPACTED MATERIAL.

4. SILT FENCE FABRIC SHOULD BE SECURELY FASTENED TO EACH STEEL OR WOOD SUPPORT POST OR TO WOVEN WIRE , WHICH IS IN TURN ATTACHED TO THE STEEL OR WOOD FENCE POST.

5. INSPECTION SHALL BE MADE WEEKLY OR AFTER EACH RAINFALL EVENT AND REPAIR OR REPLACEMENT SHALL BE MADE PROMPTLY AS NEEDED.

6. SILT FENCE SHALL BE REMOVED WHEN THE SITE IS COMPLETELY STABILIZED SO AS NOT TO BLOCK OR IMPEDE STORM FLOW OR DRAINAGE.

7. ACCUMULATED SILT SHALL BE REMOVED WHEN IT REACHES A DEPTH OF 150 mm (6 inches). THE SILT SHALL BE DISPOSED OF ON AN APPROVED SITE AND IN SUCH A MANNER THAT WILL NOT CONTRIBUTE TO ADDITIONAL SILTATION.

CITY OF AUSTIN WATERSHED PROTECTION DEPARTMENT	SILT FENCE	
9/1/2011 ADOPTED	THE ARCHITECT/ENGINEER ASSUMES RESPONSIBILITY FOR APPROPRIATE USE OF THIS STANDARD.	STANDARD NO. 642S-1

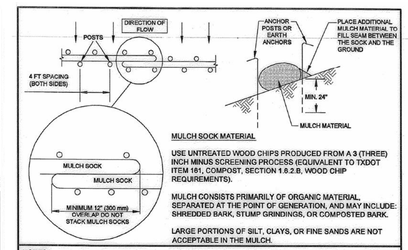

MULCH SOCK MATERIAL

USE UNTREATED WOOD CHIPS PRODUCED FROM A 3 (THREE) INCH MINUS SCREENING PROCESS (EQUIVALENT TO TXDOT ITEM 161, COMPOST, SECTION 1.8.2.B, WOOD CHIP REQUIREMENTS).

MULCH CONSISTS PRIMARILY OF ORGANIC MATERIAL SEPARATED AT THE POINT OF GENERATION, AND MAY INCLUDE: SHREDDED BARK, STUMP GRINDINGS, OR COMPOSTED BARK.

LARGE PORTIONS OF SILT, CLAYS, OR FINE SANDS ARE NOT ACCEPTABLE IN THE MULCH.

NOTES:
1. STEEL OR WOOD POSTS WHICH SUPPORT THE MULCH SOCK SHALL BE INSTALLED ON A SLIGHT ANGLE TOWARD THE ANTICIPATED RUNOFF SOURCE. POST MUST BE EMBEDDED A MINIMUM OF 600mm (24 inches). IF WOOD POSTS CANNOT ACHIEVE 600mm (24 inches) DEPTH, USE STEEL POSTS. EARTH ANCHORS ARE ALSO ACCEPTABLE.
2. THE TOE OF THE MULCH SOCK SHALL BE PLACED SO THAT THE MULCH SOCK IS FLAT AND PERPENDICULAR TO THE LINE OF FLOW. IN ORDER TO PREVENT WATER FROM FLOWING BETWEEN THE JOINTS OF ADJACENT ENDS OFMULCH SOCKS, LAP THE ENDS OF ADJACENT MULCH SOCKS A MINIMUM OF 300mm (12 inches).
3. MULCH MATERIAL MUST BE FREE OF REFUSE, PHYSICAL CONTAMINANTS, AND MATERIAL TOXIC TO PLANT GROWTH; IT IS NOT ACCEPTABLE FOR THE MULCH MATERIAL TO CONTAIN GROUND CONSTRUCTION DEBRIS, BIOSOLIDS, OR MANURE.
4. SOCK MATERIAL WILL BE 100% BIODEGRADABLE, PHOTODEGRADABLE, OR RECYCLABLE SUCH AS BURLAP, TWINE, UV PHOTOBIODEGRADABLE PLASTIC, POLYESTER, OR ANY OTHER ACCEPTABLE MATERIAL.
5. MULCH SOCKS SHOULD BE USED AT THE BASE OF SLOPES NO STEEPER THAN 2:1 AND SHOULD NOT EXCEED THE MAXIMUM SPACING CRITERIA PROVIDED IN CITY OF AUSTIN ENVIRONMENTAL CRITERIA MANUAL TABLE 1.4.5.F.1 FOR A GIVEN SLOPE CATEGORY.
6. ACCUMULATED SILT SHALL BE REMOVED WHEN IT REACHES A DEPTH OF 150mm (6 inches). THE SILT SHALL BE DISPOSED OF ON AN APPROVED SITE AND IN SUCH A MANNER THAT WILL NOT CONTRIBUTE TO ADDITIONAL SILTATION.

CITY OF AUSTIN WATERSHED PROTECTION DEPARTMENT	MULCH SOCK	
08/24/2010 ADOPTED	THE ARCHITECT/ENGINEER ASSUMES RESPONSIBILITY FOR APPROPRIATE USE OF THIS STANDARD.	STANDARD NO. 648S-1

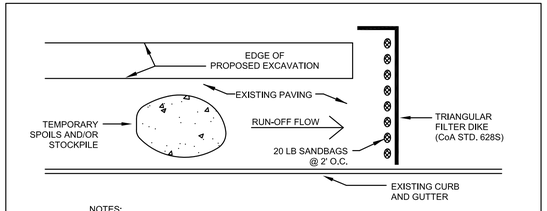

NOTES:
1. THE TEMPORARY SPOILS/STOCKPILE STORAGE AREA AND STAGING AREA MAY BE LOCATED DIRECTLY ADJACENT TO THE EXCAVATION AND ON THE PAVEMENT.
2. ANY SPOIL NOT INTENDED TO BE REUSED WILL BE HAULED TO AN APPROVED OR PERMITTED DISPOSAL SITE DAILY.
3. INSTALL TRIANGULAR SEDIMENT FILTER DIKE (DETAIL 628S) ACROSS FULL WIDTH OF TRAFFIC CLOSURE AND DOWNSTREAM OF CONSTRUCTION AREA, PERPENDICULAR TO CURB AND PLACED TO EFFECTIVELY CATCH AND CONTAIN SEDIMENT LADEN RUNOFF FROM THE EXCAVATED AREA. FILTER DIKE TO FOLLOW ACTIVE CONSTRUCTION. REMOVING AND RE–SETTING FILTER DIKE IS CONSIDERED SUBSIDIARY TO BARRICADES AND TRAFFIC HANDLING.

ADDITIONAL EROSION/SEDIMENTATION CONTROL FOR WORK IN PAVED AREAS FOR GENERAL PERMIT PROGRAM PROJECTS

CITY OF AUSTIN FOUNDED
Jose I. Guerra, Inc.
Consulting Engineers
Structural • Civil • Mechanical • Electrical
TBPE FIRM F-3
STATE OF TEXAS
GLENN CHRISTOPHER PREY
123856
LICENSED PROFESSIONAL ENGINEER
3-14-2019

THESE DESIGN DOCUMENTS ARE NOT TO BE USED FOR CONSTRUCTION PRIOR TO REGULATORY SIGNATURE AND PERMIT.

GENERAL PERMIT OFFICE
EROSION AND SEDIMENTATION CONTROL
NOTES AND DETAILS
HOWARD LANE WATER MAIN EXTENSION
AUSTIN, TX

NO.	BY	DATE	REVISIONS	REMARKS

SHEET INFORMATION
DATE 3/14/2019
SHEET 6 OF 36
CAD REF. NO. C-100

GENERAL PERMIT PROGRAM

F:\18004_HOWARD_LANE_WATER_MAIN\DRAWINGS\CAD\C100 EROSION & SEDIMENT CONTROL NOTES.DWG

GENERAL PERMIT PROGRAM (GPP) STANDARD ENVIRONMENTAL NOTES:

ADDITIONAL AREAS:

1. ANY ADDITIONAL AREAS REQUIRED FOR CONSTRUCTION OF THIS PROJECT SHALL BE THE SOLE RESPONSIBILITY OF THE CONTRACTOR. CONTRACTOR MUST SECURE CITY OF AUSTIN APPROVAL OF PROPOSED ADDITIONAL AREAS PRIOR TO USE. APPROVAL OF "CORRECTION REQUEST" MUST BE SECURED FROM THE GENERAL PERMIT PROGRAM OFFICE OF THE PLANNING AND DEVELOPMENT REVIEW DEPARTMENT.

2. ALL ASSOCIATED PERMITS AND FEES SHALL BE THE SOLE RESPONSIBILITY OF THE CONTRACTOR.

3. IN ORDER TO SECURE APPROVAL FOR USE OF ADDITIONAL AREAS, CONTRACTOR MUST PROVIDE COMPLETE "CORRECTION REQUEST" SUBMITTAL TO GENERAL PERMIT PROGRAM OFFICE AND ALLOW A ONE WEEK COMMENT PERIOD FOR EACH REVIEW. CONTRACTOR SHOULD REQUEST INFORMATION ON THE ELEMENTS REQUIRED TO BE INCLUDED IN THE SUBMITTAL FROM THE OWNER'S REPRESENTATIVE OR THE GENERAL PERMIT PROGRAM OFFICE.

4. CONTRACTOR MUST INSTALL AND MAINTAIN EROSION/SEDIMENTATION CONTROLS AND TREE PROTECTION FOR ALL SUCH AREAS IN ACCORDANCE WITH THE CITY OF AUSTIN ENVIRONMENTAL CRITERIA MANUAL AND AS INCLUDED IN THE APPROVED SUBMITTAL OR DIRECTED IN THE FIELD BY THE GENERAL PERMIT PROGRAM REPRESENTATIVE.

5. A SIGNED COPY OF THE PLANS PERMITTED THROUGH THE GENERAL PERMIT PROGRAM MUST BE KEPT ON SITE AND ACCESSIBLE AT ALL TIMES DURING PROJECT CONSTRUCTION.

DEWATERING:

CONTRACTOR IS RESPONSIBLE FOR DEWATERING OF WORK AREA. CONTRACTOR MUST SECURE CITY OF AUSTIN APPROVAL OF PROPOSED DEWATERING PROCEDURES PRIOR TO INSTALLATION OR USE. APPROVAL MUST BE SECURED FROM THE GENERAL PERMIT PROGRAM (GPP) OFFICE OF THE PLANNING AND DEVELOPMENT REVIEW DEPARTMENT. CONTRACTOR MUST PROVIDE COMPLETE SUBMITTAL TO GPP OFFICE AND ALLOW AN ONE WEEK (MIN.) COMMENT PERIOD FOR EACH REVIEW. CONTACT THE GPP OFFICE FOR SUBMITTAL REQUIREMENTS.

FUEL STORAGE:

FUEL STORAGE IS PROHIBITED ON THIS PROJECT. ADDITIONALLY, THE CONTRACTOR IS REQUIRED TO NOTIFY THE GENERAL PERMIT PROGRAM OFFICE IMMEDIATELY FOLLOWING ANY SPILL OF FUEL OR OTHER TOXIC MATERIAL. CONTRACTOR IS REQUIRED TO FOLLOW-UP WITH WRITTEN DOCUMENTATION, INCLUDING A COMPLETE DESCRIPTION OF THE INCIDENT, MATERIAL SPILLED, AND ACTIONS TAKEN TO CONTAIN AND CLEAN-UP MATERIAL.

FUGITIVE DUST CONTROL:

ALL PROJECTS APPROVED THROUGH THE GENERAL PERMIT PROGRAM (GPP) MUST COMPLY WITH THE CODE OF THE CITY OF AUSTIN AND THE ENVIRONMENTAL CRITERIA MANUAL REQUIREMENTS TO CONTROL AIRBORNE DUST. COMPLIANCE IS REQUIRED FOR ENTIRE PROJECT SITE AS WELL AS ASSOCIATED OPERATIONS. CONTACT THE GPP OFFICE FOR RECOMMENDED CONTROL METHODS.

SPOILS STORAGE:

NO SPOILS STORAGE IS ALLOWED WITHIN A CRITICAL WATER QUALITY ZONE, A 100-YEAR FLOODPLAIN, OR ON A SLOPE WITH A GRADIENT OF MORE THAN 15 PERCENT.

E/S CONTROLS FOR BORE / RECEIVING PIT LOCATIONS:

TEMPORARY E/S CONTROLS MUST SURROUND THE ENTIRETY OF BORING OPERATIONS, INCLUDING PIT, EQUIPMENT, ETC. FOR LOCATIONS WITHIN IMPERVIOUS AREAS, TEMPORARY CONTROL WILL BE TRIANGULAR FILTER DIKE (COA STANDARD DETAIL #628S). DIKE FLAP WILL BE CONTINUOUSLY WEIGHTED DOWN THROUGH THE USE OF 1" BY 4" WOOD STRIPS NAILED TO THE PAVEMENT, EXCEPT FOR THE ACCESS POINT. PLACEMENT OF TEMPORARY E/S CONTROLS ACROSS ACCESS POINT WILL BE REQUIRED WHENEVER THE SITE IS NOT ACTIVELY USED. FOR LOCATIONS WITHIN PERVIOUS AREAS, TEMPORARY CONTROL WILL BE SILT FENCE (COA STANDARD DETAIL #642S-1) OR MULCH SOCKS (COA STANDARD DETAIL #648S-1), AS INDICATED ON APPROVED PLANS.

SOIL RETENTION BLANKET:

UNLESS OTHERWISE INDICATED IN THE PROJECT DOCUMENTS, INSTALLATION OF SOIL RETENTION BLANKET WILL BE REQUIRED FOR ALL IMPACTED SLOPES GREATER THAN 3:1 AND ALL IMPACTED AREAS WITHIN DRAINAGE CONVEYANCES. (CITY OF AUSTIN STANDARD SPECIFICATION ITEM 605S) SOIL RETENTION BLANKET SUBMITTAL MUST BE APPROVED BY PROJECT ENGINEER AND GENERAL PERMIT PROGRAM (GPP) REPRESENTATIVE PRIOR TO USE AND MUST INCLUDE PRODUCT AND INSTALLATION DETAILS PROVIDED BY MANUFACTURER. FINISH GRADING MUST BE INSPECTED AND APPROVED BY GPP INSPECTOR PRIOR TO BLANKET INSTALLATION. INSTALLATION MUST BE IN ACCORDANCE WITH MANUFACTURER'S RECOMMENDATIONS AND MUST BE INSPECTED AND APPROVED BY GPP REPRESENTATIVE PRIOR TO ACCEPTANCE.

SOD INSTALLATION:

REVEGETATION WITHIN MANAGED TURF AREAS MUST BE ACCOMPLISHED THROUGH THE INSTALLATION OF SOLID BLOCK GRASS SOD. SOD TYPE MUST MATCH ADJACENT GRASS TYPE. QUESTIONS REGARDING SOD TYPE WILL BE RESOLVED BY THE GENERAL PROGRAM PERMIT REPRESENTATIVE. REFER TO CITY OF AUSTIN STANDARD SPECIFICATION ITEM NO. 602S: SODDING FOR EROSION CONTROL, UNLESS OTHERWISE NOTED ON THE APPROVED PLANS.

TxDOT RIGHTS-OF-WAY:

TOPSOIL (TxDOT ITEM NO. 160), SOIL RETENTION BLANKET (TxDOT ITEM NO. 169), AND REVEGETATION (TxDOT ITEM NO. 164) INSTALLED WITHIN TEXAS DEPARTMENT OF TRANSPORTATION (TxDOT) RIGHT-OF-WAY SHALL COMPLY WITH "REQUIREMENTS FOR INSTALLATION OF UTILITIES WITHIN THE STATE RIGHT-OF-WAY, AUSTIN DISTRICT".

PROJECT SEQUENCE:
(REFER TO FULL PLAN SET FOR PROJECT-SPECIFIC ADDITIONS, IF APPLICABLE.)

PRIOR TO CONSTRUCTION:

1. SECURE APPLICABLE COA PERMITS, INCLUDING APPROVAL UNDER GENERAL PERMIT PROGRAM AND RIGHT-OF-WAY EXCAVATION PERMIT.

2. NOTIFY GENERAL PERMIT PROGRAM REPRESENTATIVE PRIOR TO PLACEMENT OF E/S CONTROLS AND TREE PROTECTION FENCING. ALL PROPOSED PHASING OF CONTROLS MUST BE SUBMITTED TO AND APPROVED BY THE GENERAL PERMIT PROGRAM REPRESENTATIVE PRIOR TO THE FIELD PRE-CONSTRUCTION CONFERENCE.

3. NOTIFY COA TEMPORARY TRAFFIC CONTROL REPRESENTATIVE PRIOR TO PLACEMENT OF TEMPORARY TRAFFIC CONTROLS. ALL PROPOSED PHASING OF CONTROLS MUST BE INDICATED ON APPROVED TEMPORARY TRAFFIC CONTROL PLAN AND SEALED BY PROFESSIONAL ENGINEER.

4. PLACE TEMPORARY E/S CONTROLS AND TREE PROTECTION FENCING PRIOR TO BEGINNING ANY EXCAVATION. INSTALL C.I.P. SIGN, IF APPLICABLE.

5. HOLD ENVIRONMENTAL PRE-CONSTRUCTION CONFERENCE ON SITE WITH THE CONTRACTOR, OWNER'S REPRESENTATIVE, AND GENERAL PERMIT PROGRAM REPRESENTATIVE AFTER INSTALLATION OF E/S CONTROLS AND TREE PROTECTION FENCING AND PRIOR TO ANY TRENCHING OPERATIONS.

6. PLACE TEMPORARY TRAFFIC CONTROL DEVICES.

PROJECT CONSTRUCTION:

1. BEGIN CONSTRUCTION. NOTIFY GENERAL PERMIT PROGRAM REPRESENTATIVE A MINIMUM OF 48 HOURS IN ADVANCE OF TRANSITION BETWEEN PHASES.

2. CONTACT GENERAL PERMIT OFFICE TO SCHEDULE FIELD INSPECTION PRIOR TO BEGINNING INSTALLATION OF PERMANENT E/S CONTROLS.

3. COMPLETE RESTORATION OF ALL AREAS DISTURBED BY CONSTRUCTION ACTIVITIES FOR THIS PROJECT. (PERMANENT E/S CONTROLS)

4. REMOVE TEMPORARY TRAFFIC CONTROL DEVICES RELATED TO WORK AREAS OUTSIDE OF THE STREET.

5. HOLD ENVIRONMENTAL POST-CONSTRUCTION CONFERENCE ON SITE WITH THE CONTRACTOR, OWNER'S REPRESENTATIVE, AND GENERAL PERMIT PROGRAM REPRESENTATIVE. ALL PERMANENT E/S CONTROLS MUST BE ACCEPTED BY THE GENERAL PERMIT PROGRAM REPRESENTATIVE. PERMANENT CONTROLS SHALL CONSIST OF REVEGETATION PER DETAILS 602, 604S, AND 609S AS INDICATED ON APPROVED PLANS.

6. FOLLOWING FINAL ACCEPTANCE OF PERMANENT E/S CONTROLS BY THE GENERAL PERMIT PROGRAM REPRESENTATIVE, REMOVE TEMPORARY E/S CONTROLS. CLEAN EXISTING STORM DRAINAGE SYSTEMS AS NECESSARY DUE TO CONSTRUCTION OPERATIONS.

7. DRESS-UP AND RESTORE ANY AREAS DISTURBED BY REMOVAL OF TEMPORARY E/S CONTROLS DESCRIBED ABOVE.

REQUIRED SUBMITTALS:

SUBMITTALS REQUIRED TO BE APPROVED BY GENERAL PERMIT PROGRAM REPRESENTATIVE INCLUDE: SUBMITTALS TRIGGERED BY CITY OF AUSTIN SERIES 600 SPECIFICATIONS AND RELATED SPECIAL PROVISIONS/SPECIFICATIONS, CONSTRUCTION SCHEDULE, TREE PROTECTION, P-6 AND OTHER ROOT ZONE PROTECTION/MITIGATION MEASURES, DEWATERING PLAN, WATERING SCHEDULE FOR REVEGETATION AREAS, AND ANY VEGETATIVE REPLACEMENT PROPOSALS, IF NOT ALREADY PART OF THE PERMITTED PLAN SET.

CITY OF AUSTIN - STANDARD NOTES TREE AND NATURAL AREA PROTECTION (MODIFIED FOR USE ON GENERAL PERMIT PROJECTS)

1. ALL TREES AND NATURAL AREAS SHOWN ON PLAN TO BE PRESERVED SHALL BE PROTECTED DURING CONSTRUCTION WITH TEMPORARY MEASURES.

2. PROTECTIVE MEASURES SHALL BE INSTALLED ACCORDING TO CITY OF AUSTIN STANDARDS FOR TREE PROTECTION.

3. PROTECTIVE MEASURES SHALL BE INSTALLED PRIOR TO THE START OF ANY SITE PREPARATION WORK (CLEARING, GRUBBING OR GRADING), AND SHALL BE MAINTAINED THROUGHOUT ALL PHASES OF THE PROJECT.

4. EROSION AND SEDIMENTATION CONTROL MEASURES SHALL BE INSTALLED OR MAINTAINED IN A MANNER WHICH DOES NOT RESULT IN SOIL BUILD-UP, COMPACTION OR CUTTING OF CRITICAL ROOT ZONE WITHIN TREE DRIP LINES.

5. TREE PROTECTION SHALL COMPLETELY SURROUND THE TREES OR GROUP OF TREES AND WILL BE LOCATED AT THE OUTERMOST LIMIT OF BRANCHES (DRIP LINE). FOR NATURAL AREAS, PROTECTIVE MEASURES SHALL FOLLOW THE LIMIT OF CONSTRUCTION LINE, IN ORDER TO PREVENT THE FOLLOWING:

   A. SOIL COMPACTION IN THE ROOT ZONE AREA RESULTING FROM VEHICULAR TRAFFIC OR STORAGE OF EQUIPMENT OR MATERIALS;

   B. ROOT ZONE DISTURBANCES DUE TO GRADE CHANGES (GREATER THAN 6 INCHES CUT OR FILL) OR TRENCHING NOT REVIEWED AND AUTHORIZED BY THE GENERAL PERMIT PROGRAM OFFICE OF THE PLANNING AND DEVELOPMENT REVIEW DEPARTMENT;

   C. WOUNDS TO EXPOSED ROOTS, TRUNK OR LIMBS BY MECHANICAL EQUIPMENT;

   D. OTHER ACTIVITIES DETRIMENTAL TO TREES SUCH AS CHEMICAL STORAGE, CEMENT TRUCK CLEANING, AND FIRES.

6. EXCEPTIONS TO INSTALLING PROTECTIVE FENCES AT CRITICAL ROOT ZONES MAY BE PERMITTED IN THE FOLLOWING CASES:

   A. WHERE THERE IS TO BE AN APPROVED GRADE CHANGE, IMPERMEABLE PAVING SURFACE, TREE WELL, OR OTHER SUCH SITE DEVELOPMENT, ERECT THE FENCE APPROXIMATELY 2 FEET BEYOND THE AREA DISTURBED;

   B. WHERE PERMEABLE PAVING IS TO BE INSTALLED, ERECT THE FENCE AT THE OUTER LIMITS OF THE PERMEABLE PAVING AREA

   C. WHERE TREES ARE CLOSE TO PROPOSED BUILDINGS, ERECT THE FENCE NO CLOSER THAN 6 FEET TO THE BUILDING

   D. WHERE THERE ARE SEVERE SPACE CONSTRAINTS DUE TO TRACT SIZE, OR OTHER SPECIAL REQUIREMENTS, CONTACT THE GENERAL PERMIT PROGRAM OFFICE AT 974-6330 TO DISCUSS ALTERNATIVES.

SPECIAL NOTE: FOR THE PROTECTION OF NATURAL AREAS, NO EXCEPTIONS TO INSTALLING FENCES AT THE LIMIT OF CONSTRUCTION LINE WILL BE PERMITTED.

WHERE ANY OF THE ABOVE EXCEPTIONS RESULT IN A FENCE 5 FEET OR CLOSER TO A TREE TRUNK, PROTECT THE TRUNK WITH STRAPPED-ON PLANKING TO A HEIGHT OF 8 FEET (OR TO THE LIMITS OF LOWER BRANCHING) IN ADDITION TO THE REDUCED FENCING.

7. WHERE ANY OF THE ABOVE EXCEPTIONS RESULT IN AREAS OF UNPROTECTED ROOT ZONES, THOSE AREAS SHOULD BE COVERED WITH 12 INCHES OF ORGANIC MULCH TO MINIMIZE SOIL COMPACTION DURING CONSTRUCTION. FILTER FABRIC UNDERLAYMENT MAY BE REQUIRED AT DIRECTION OF GENERAL PERMIT PROGRAM REPRESENTATIVE BASED ON SITE CONDITIONS AND CONSTRUCTION ACTIVITIES. MAXIMUM FOUR (4) INCHES DEPTH MAY BE LEFT IN PLACE AFTER CONSTRUCTION WITH APPROVAL FROM THE GENERAL PERMIT PROGRAM REPRESENTATIVE.

8. ALL GRADING WITHIN PROTECTED ROOT ZONE AREAS SHALL BE DONE BY HAND OR WITH SMALL EQUIPMENT TO MINIMIZE ROOT DAMAGE. PRIOR TO GRADING, RELOCATE PROTECTIVE FENCES TO 2 FEET BEHIND THE GRADE CHANGE AREA.

9. ANY ROOTS EXPOSED BY CONSTRUCTION ACTIVITY SHALL BE PRUNED FLUSH WITH THE SOIL. BACKFILL ROOT AREAS WITH GOOD QUALITY TOP SOIL AS SOON AS POSSIBLE. IF EXPOSED ROOT AREAS ARE NOT BACKFILLED WITHIN 2 DAYS, COVER THEM WITH ORGANIC MATERIAL IN A MANNER WHICH REDUCES SOIL TEMPERATURE AND MINIMIZES WATER LOSS DUE TO EVAPORATION.

10. PRIOR TO EXCAVATION OR GRADE CUTTING WITHIN TREE DRIPLINES, MAKE A CLEAN CUT BETWEEN THE DISTURBED AND UNDISTURBED ROOT ZONES WITH A ROCK SAW OR SIMILAR EQUIPMENT TO MINIMIZE DAMAGE TO REMAINING ROOTS.

11. TREES MOST HEAVILY IMPACTED BY CONSTRUCTION ACTIVITIES SHOULD BE WATERED DEEPLY ONCE A WEEK DURING PERIODS OF HOT, DRY WEATHER. TREE CROWNS SHOULD BE SPRAYED WITH WATER PERIODICALLY TO REDUCE DUST ACCUMULATION ON THE LEAVES.

12. ANY TRENCHING REQUIRED FOR THE INSTALLATION OF LANDSCAPE IRRIGATION SHALL BE PLACED AS FAR FROM EXISTING TREE TRUNKS AS POSSIBLE.

13. NO LANDSCAPE TOPSOIL DRESSING GREATER THAN 4 INCHES SHALL BE PERMITTED WITHIN THE DRIPLINE OF TREES. NO SOIL IS PERMITTED ON THE ROOT FLARE OF ANY TREE.

14. PRUNING TO PROVIDE CLEARANCE FOR STRUCTURES, VEHICULAR TRAFFIC AND EQUIPMENT SHALL TAKE PLACE BEFORE CONSTRUCTION BEGINS. SEE NOTE THREE (3) OF SUPPLEMENTAL TREE PROTECTION NOTES FOR ADDITIONAL REQUIREMENTS.

15. ALL FINISHED PRUNING MUST BE DONE ACCORDING TO RECOGNIZED, APPROVED STANDARDS OF THE INDUSTRY (REFERENCE THE NATIONAL ARBORIST ASSOCIATION PRUNING STANDARDS FOR SHADE TREES AVAILABLE ON REQUEST FROM THE GENERAL PERMIT PROGRAM OFFICE).

16. DEVIATIONS FROM THE ABOVE NOTES MAY BE CONSIDERED ORDINANCE VIOLATIONS IF THERE IS SUBSTANTIAL NONCOMPLIANCE OR IF A TREE SUSTAINS DAMAGE AS A RESULT.

17. TREES APPROVED FOR REMOVAL SHALL BE REMOVED IN A MANNER WHICH DOES NOT IMPACT TREES TO BE PRESERVED.

SUPPLEMENTAL TREE PROTECTION NOTES

1. ALL TREE PROTECTION MUST COMPLY WITH CITY OF AUSTIN REQUIREMENTS AS OUTLINED IN THE ENVIRONMENTAL CRITERIA MANUAL AND AS INDICATED BY STANDARD COA NOTES AND DETAILS INCLUDED WITHIN THIS DOCUMENT SET. CONTRACTOR SHALL INSTALL PROTECTION PRIOR TO PRE-CONSTRUCTION CONFERENCE, MAKE ADJUSTMENTS TO PROTECTION AS DIRECTED BY THE GPP REPRESENTATIVE, AND MAINTAIN PROTECTION UNTIL PROJECT IS COMPLETE.

2. TYPE AND LOCATION OF ALL TREE PROTECTION MUST BE APPROVED IN THE FIELD BY THE GENERAL PERMIT PROGRAM (GPP) REPRESENTATIVE PRIOR TO CONSTRUCTION.

3. WALK-THROUGH: CONTRACTOR SHALL CONDUCT WALK-THROUGH MEETING WITH GENERAL PERMIT PROGRAM REPRESENTATIVE PRIOR TO PERFORMING ANY PRUNING ACTIVITIES ON TREES IN PROJECT AREA. PURPOSE OF WALK-THROUGH WILL BE TWOFOLD. ONE PURPOSE WILL BE TO DETERMINE THE MINIMUM AMOUNT OF PRUNING NECESSARY TO ALLOW CONSTRUCTION WORK TO BE COMPLETED. SECOND PURPOSE WILL BE TO DETERMINE AREAS OF PROJECT IN WHICH EXHAUST DIVERTERS WILL BE REQUIRED ON CONSTRUCTION EQUIPMENT TO PREVENT SCORCHING OF EXISTING TREES.

4. ALL PRUNING MUST BE PERFORMED IN ACCORDANCE WITH ANSI A300 (PART 1) - 2001 AMERICAN NATIONAL STANDARD FOR TREE CARE OPERATIONS (PRUNING), OR LATEST APPROVED VERSION. THIS DOCUMENT MAY BE OBTAINED ONLINE FOR A FEE AT WWW.ANSI.ORG.

5. PRUNING SHALL BE DONE WITH CLEAN, SHARP TOOLS. TO PREVENT BARK TEARS, THE WEIGHT OF THE BRANCH SHALL BE REMOVED BEFORE MAKING FINAL PRUNING CUT.

6. ALL PRUNING SHALL PRESERVE THE NATURAL CHARACTER OF THE TREE.

7. ONLY COLLAR CUTS ARE ACCEPTABLE. NO FLUSH CUTS OR STUB CUTS WILL BE ALLOWED.

8. ALL BRANCHES THAT ARE BROKEN OR DAMAGED DURING CONSTRUCTION SHALL BE REMOVED.

9. PRUNING CUTS OR DAMAGED AREAS ON AN OAK TREE SHALL BE PAINTED WITHIN FIVE MINUTES WITH A STANDARD TREE WOUND DRESSING. TREE WOUND DRESSING SHALL BE EITHER TREEKOTE AEROSOL OR TANGLEFOOT PRUNING SEALER (OR APPROVED EQUAL). THIS ALSO APPLIES TO WOUNDS CREATED BY CONSTRUCTION VEHICLES OR EQUIPMENT. ALL PRUNING MUST BE IN ACCORDANCE WITH COA OAK WILT PREVENTION POLICY.

10. ANY TREE ROOTS THAT ARE EXPOSED, CUT, OR TORN DURING CONSTRUCTION ACTIVITY SHALL BE PRUNED FLUSH WITH THE SURROUNDING SOIL. (REFER ALSO TO NUMBER 9 OF THE TREE AND NATURAL AREA PROTECTION NOTES INCLUDED IN THIS PLAN SET.)

11. ALL TRENCHING WITHIN THE CRITICAL ROOT ZONE OF A TREE TO BE PRESERVED WILL BE SAW CUT OR EXCAVATED BY HAND, AS APPROVED BY THE GENERAL PERMIT PROGRAM ARBORIST.

12. REFER TO ENVIRONMENTAL CRITERIA MANUAL APPENDIX P-6 FOR FURTHER REMEDIAL TREE CARE REQUIREMENTS. P-6 REMEDIAL TREE CARE WILL BE COORDINATED WITH AND APPROVED BY THE GENERAL PERMIT PROGRAM ARBORIST FOR PROJECTS PERMITTED THROUGH THE GENERAL PERMIT PROGRAM.

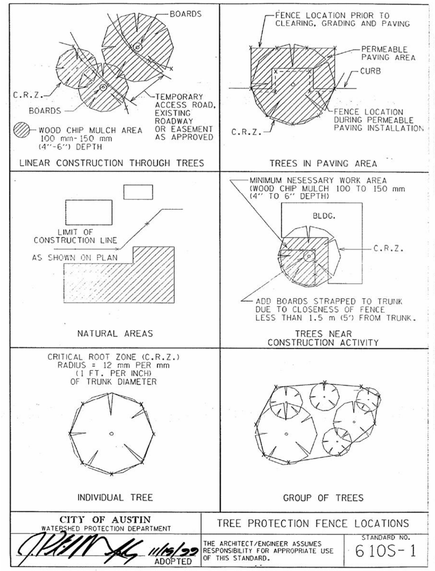

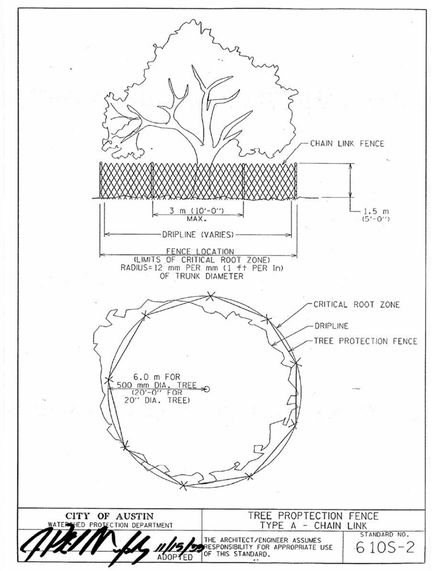

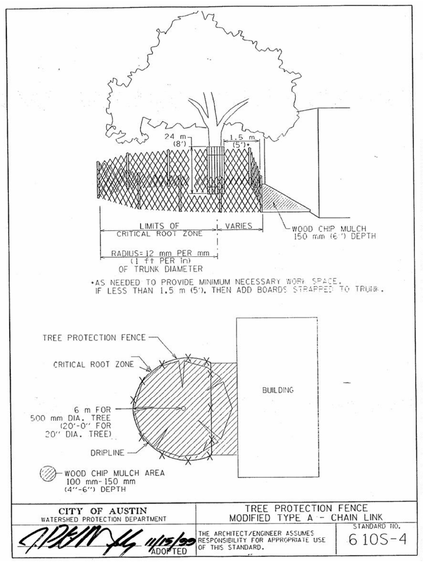

CITY OF AUSTIN

Jose I. Guerra, Inc.
Consulting Engineers
Structural • Civil • Mechanical • Electrical
TBPE FIRM F-3

STATE OF TEXAS
GLENN CHRISTOPHER PREY
123856
LICENSED PROFESSIONAL ENGINEER
3-14-2019

THESE DESIGN DOCUMENTS ARE NOT TO BE USED FOR CONSTRUCTION PRIOR TO REGULATORY SIGNATURE AND PERMIT.

GENERAL PERMIT OFFICE
TREE PROTECTION
NOTES AND DETAILS
HOWARD LANE WATER MAIN EXTENSION
AUSTIN, TX

REVISIONS

NO.	BY	DATE	REMARKS

SHEET INFORMATION
DATE 3/14/2019
SHEET 7 OF 36
CAD REF. NO. C-101

GENERAL PERMIT PROGRAM

F:\18004_HOWARD_LANE_WATER_MAIN\DRAWINGS\CAD\C100 EROSION & SEDIMENT CONTROL NOTES.DWG

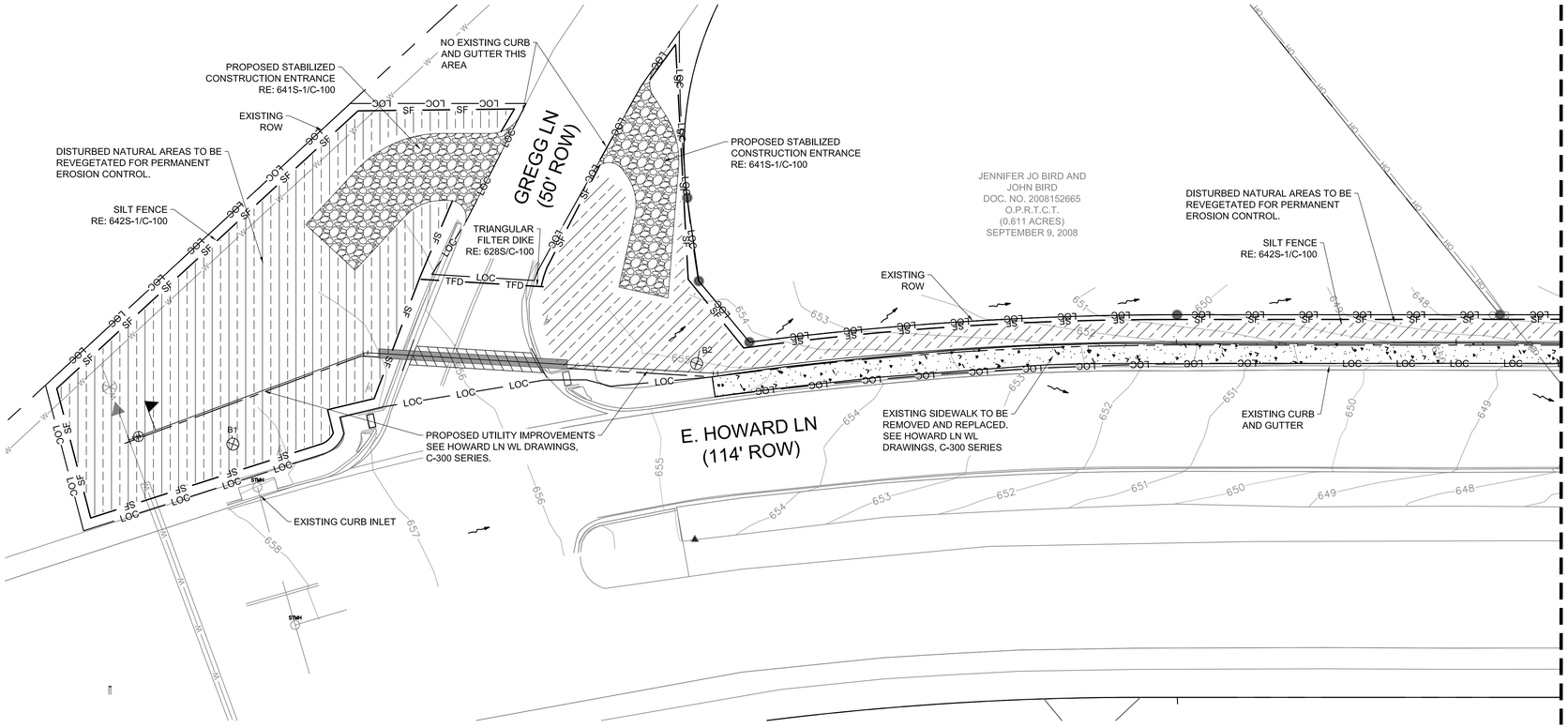

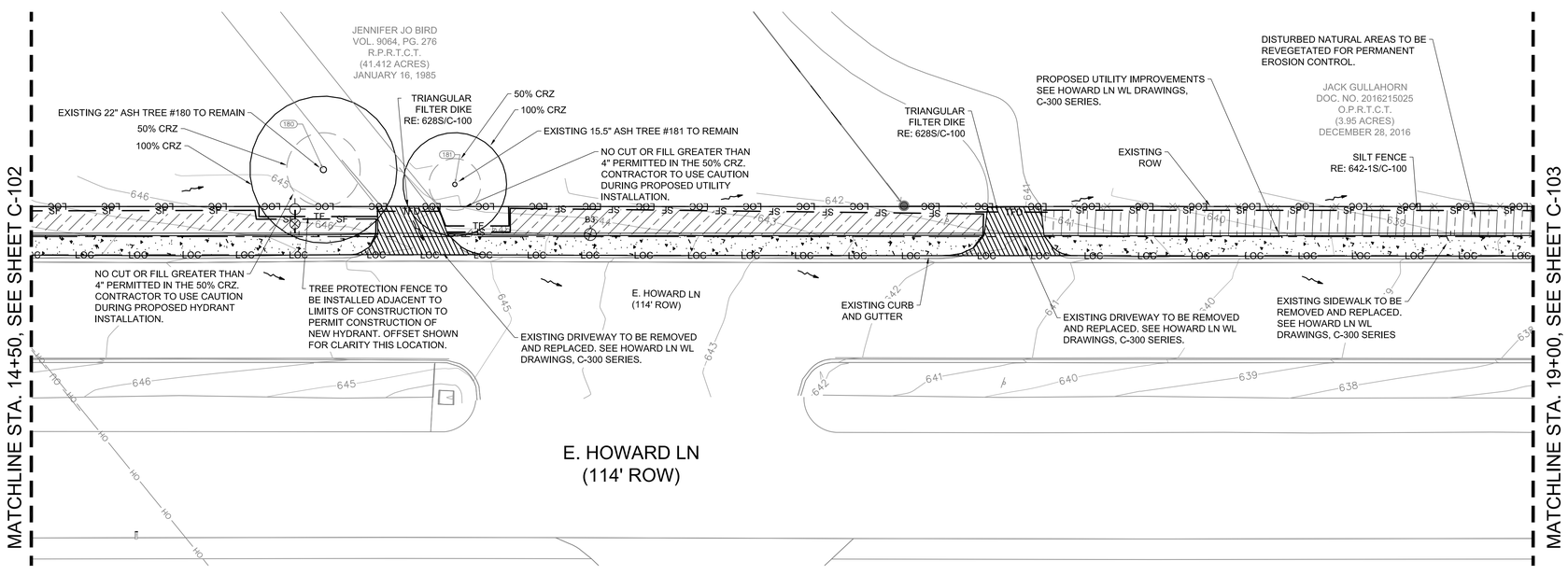

GENERAL NOTES

1. DISTURBED NATURAL AREAS REQUIRES NATIVE GRASSLANDS SEEDING AND PLANTING FOR EROSION CONTROL PER COA STANDARD SPECIFICATION 609S INCLUDING TOPSOIL AND SEED BED PREPARATION, TEMPORARY IRRIGATION, AND WEED MAINTENANCE.

LEGEND

— LOC — LOC — LOC —	LIMITS OF CONSTRUCTION
— TFD — TFD —	TRIANGULAR SEDIMENT FILTER DIKE
— TF — TF —	TREE PROTECTION FENCE
— SF — SF — SF —	SILT FENCE
	FLOW DIRECTION
	STABILIZED CONSTRUCTION ENTRANCE
	NATURAL AREAS TO BE DISTURBED

ESTIMATED QUANTITIES

ITEM	UNIT	QUANTITY
SILT FENCE	LF	3,752
TRIANGULAR FILTER DIKE	LF	455
TREE PROTECTION FENCE	LF	72
DISTURBED NATURAL AREA TO BE RESTORED	SF	29,272

ESTIMATED QUANTITIES TABLE IS FOR FULL PROJECT AND NOT PER SHEET.

SCALE (IN FEET): 0 20 40

CITY OF AUSTIN — FOUNDED 1839

Jose I. Guerra, Inc.
Consulting Engineers
Structural • Civil • Mechanical • Electrical
TBPE FIRM F-3

STATE OF TEXAS — GLENN CHRISTOPHER PREY — 123856 — LICENSED PROFESSIONAL ENGINEER
3-14-2019

THESE DESIGN DOCUMENTS ARE NOT TO BE USED FOR CONSTRUCTION PRIOR TO REGULATORY SIGNATURE AND PERMIT.

GENERAL PERMIT OFFICE
EROSION AND SEDIMENT CONTROL PLAN
STA. 14+50 TO 19+00
HOWARD LANE WATER MAIN EXTENSION
AUSTIN, TX

REVISIONS

NO.	BY	DATE	REMARKS

SHEET INFORMATION
DATE 3/14/2019
SHEET 8 OF 36
CAD REF. NO. C-102

GENERAL PERMIT PROGRAM

F:\18004_HOWARD_LANE_WATER_MAIN\DRAWINGS\CAD\C102-C105 EROSION & SEDIMENT CONTROL PLAN.DWG

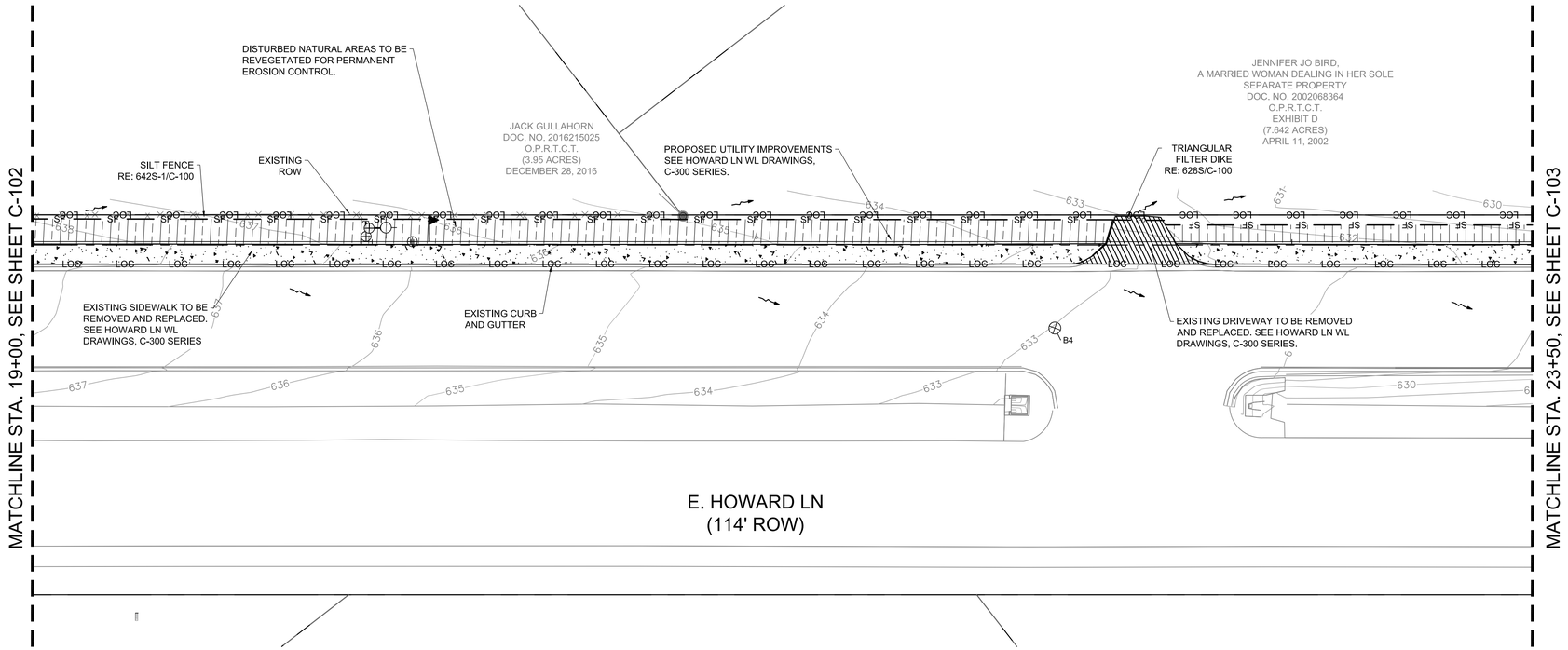

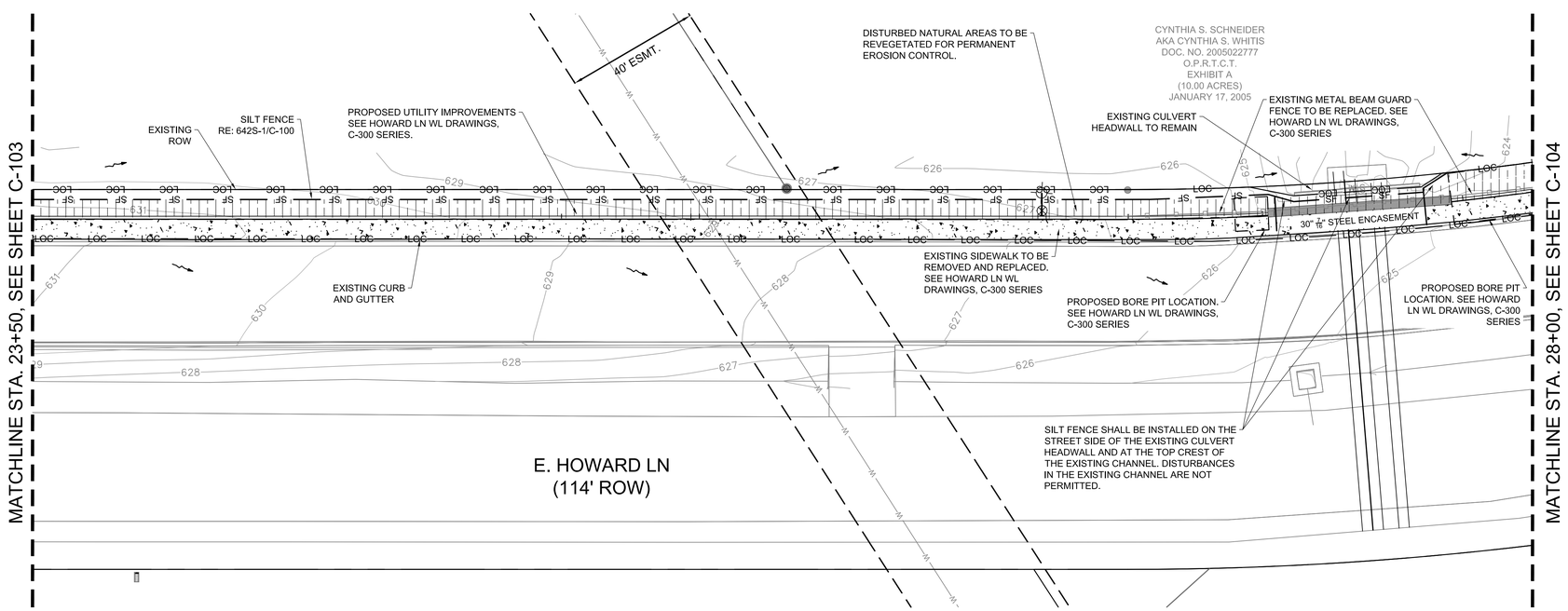

GENERAL NOTES

1. DISTURBED NATURAL AREAS REQUIRES NATIVE GRASSLANDS SEEDING AND PLANTING FOR EROSION CONTROL PER COA STANDARD SPECIFICATION 609S INCLUDING TOPSOIL AND SEED BED PREPARATION, TEMPORARY IRRIGATION, AND WEED MAINTENANCE.

LEGEND

— LOC — LOC — LOC —	LIMITS OF CONSTRUCTION
— TFD — TFD —	TRIANGULAR SEDIMENT FILTER DIKE
— TF — TF —	TREE PROTECTION FENCE
— SF — SF — SF —	SILT FENCE
	FLOW DIRECTION
	NATURAL AREAS TO BE DISTURBED

ESTIMATED QUANTITIES

ITEM	UNIT	QUANTITY
SILT FENCE	LF	3,752
TRIANGULAR FILTER DIKE	LF	455
TREE PROTECTION FENCE	LF	72
DISTURBED NATURAL AREA TO BE RESTORED	SF	29,272

ESTIMATED QUANTITIES TABLE IS FOR FULL PROJECT AND NOT PER SHEET.

SCALE (IN FEET): 0 20 40

CITY OF AUSTIN FOUNDED 1839

Jose I. Guerra, Inc.
Consulting Engineers
Structural • Civil • Mechanical • Electrical
TBPE FIRM F-3

STATE OF TEXAS
GLENN CHRISTOPHER PREY
123856
LICENSED PROFESSIONAL ENGINEER
3-14-2019

THESE DESIGN DOCUMENTS ARE NOT TO BE USED FOR CONSTRUCTION PRIOR TO REGULATORY SIGNATURE AND PERMIT.

GENERAL PERMIT OFFICE
EROSION AND SEDIMENT CONTROL PLAN
STA. 19+00 TO 28+00
HOWARD LANE WATER MAIN EXTENSION
AUSTIN, TX

REVISIONS

NO.	BY	DATE	REMARKS

SHEET INFORMATION
DATE 3/14/2019
SHEET 9 OF 36
CAD REF. NO. C-103

GENERAL PERMIT PROGRAM

F:\18004_HOWARD_LANE_WATER_MAIN\DRAWINGS\CAD\C102-C105 EROSION & SEDIMENT CONTROL PLAN.DWG

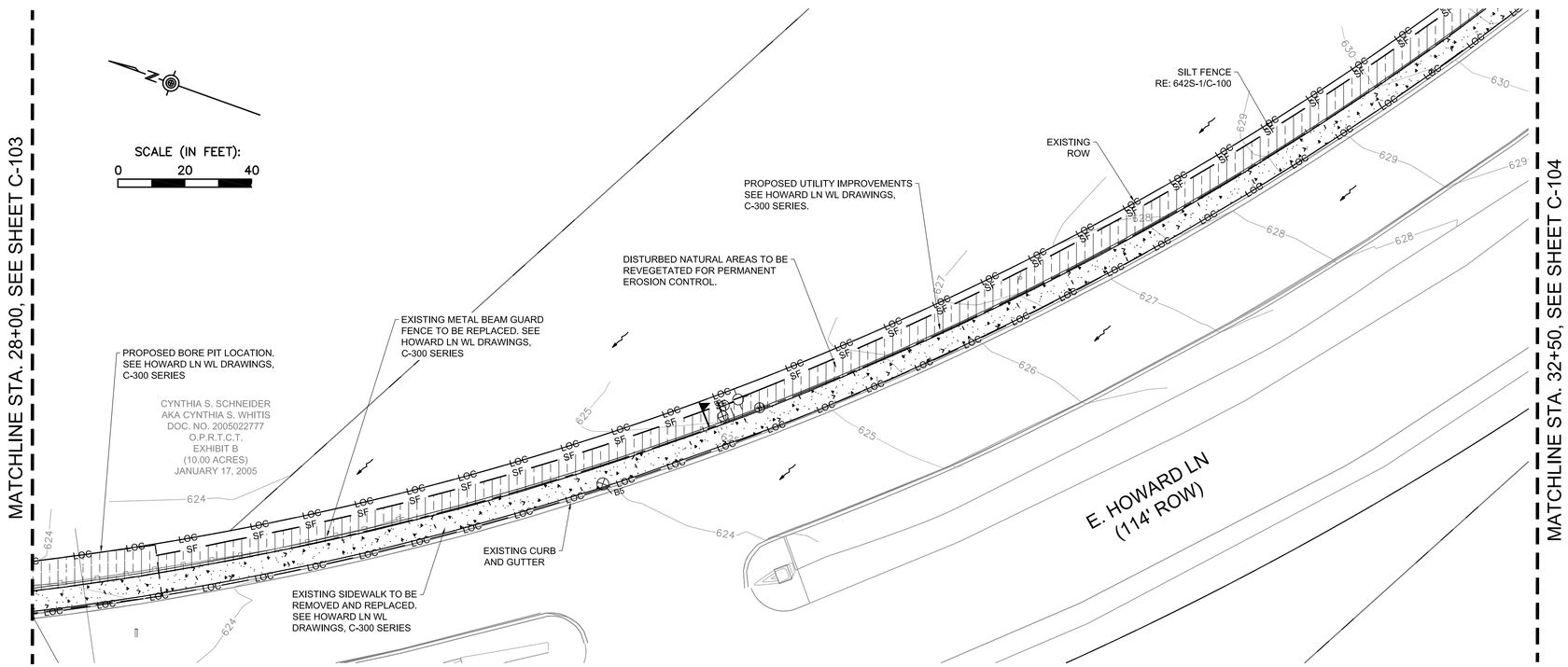

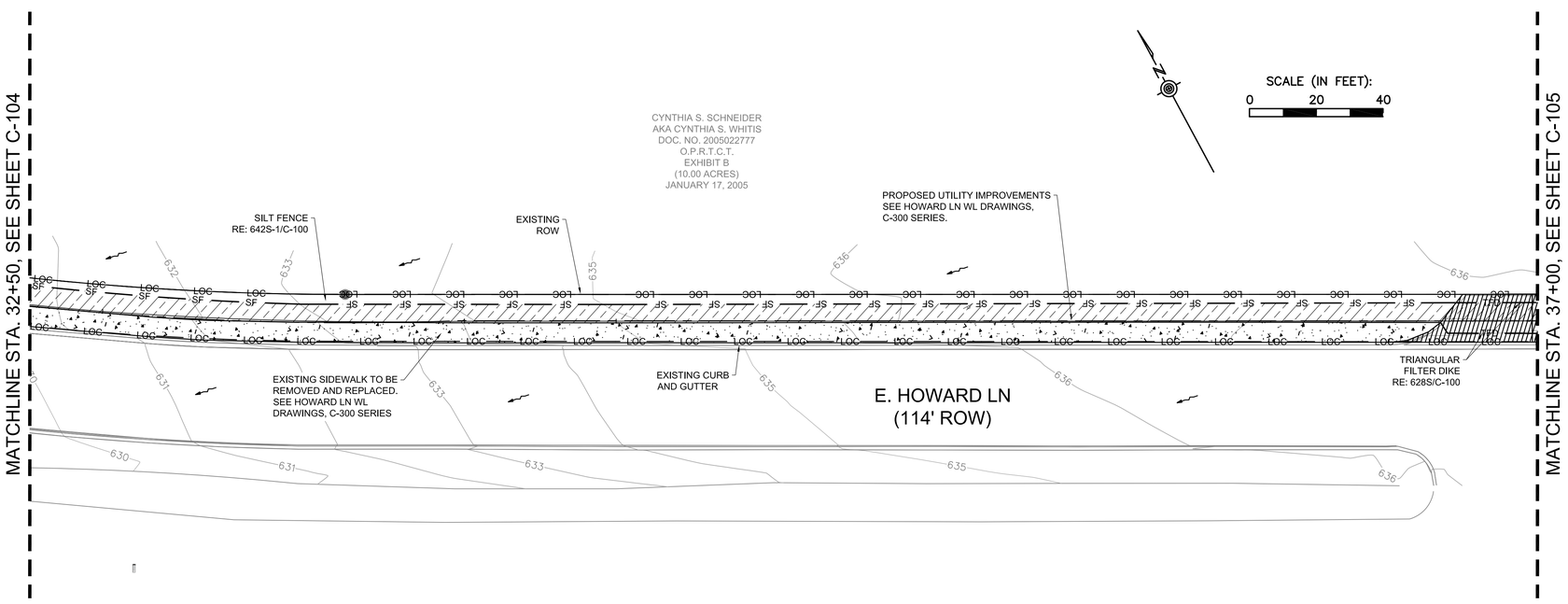

GENERAL NOTES

1. DISTURBED NATURAL AREAS REQUIRES NATIVE GRASSLANDS SEEDING AND PLANTING FOR EROSION CONTROL PER COA STANDARD SPECIFICATION 609S INCLUDING TOPSOIL AND SEED BED PREPARATION, TEMPORARY IRRIGATION, AND WEED MAINTENANCE.

LEGEND

— LOC — LOC — LOC —	LIMITS OF CONSTRUCTION
— TFD — TFD —	TRIANGULAR SEDIMENT FILTER DIKE
— TF — TF —	TREE PROTECTION FENCE
— SF — SF — SF —	SILT FENCE
	FLOW DIRECTION
	NATURAL AREAS TO BE DISTURBED

ESTIMATED QUANTITIES

ITEM	UNIT	QUANTITY
SILT FENCE	LF	3,752
TRIANGULAR FILTER DIKE	LF	455
TREE PROTECTION FENCE	LF	72
DISTURBED NATURAL AREA TO BE RESTORED	SF	29,272

ESTIMATED QUANTITIES TABLE IS FOR FULL PROJECT AND NOT PER SHEET.

CITY OF AUSTIN FOUNDED 1839

Jose I. Guerra, Inc.
Consulting Engineers
Structural • Civil • Mechanical • Electrical
TBPE FIRM F-3

STATE OF TEXAS
GLENN CHRISTOPHER PREY
123856
LICENSED PROFESSIONAL ENGINEER
3-14-2019

THESE DESIGN DOCUMENTS ARE NOT TO BE USED FOR CONSTRUCTION PRIOR TO REGULATORY SIGNATURE AND PERMIT.

GENERAL PERMIT OFFICE
EROSION AND SEDIMENT CONTROL PLAN
STA. 32+50 TO 37+00
HOWARD LANE WATER MAIN EXTENSION
AUSTIN, TX

REVISIONS			
NO.	BY	DATE	REMARKS

SHEET INFORMATION
DATE 3/14/2019
SHEET 10 OF 36
CAD REF. NO. C-104

GENERAL PERMIT PROGRAM

F:\18004_HOWARD_LANE_WATER_MAIN\DRAWINGS\CAD\C102-C105 EROSION & SEDIMENT CONTROL PLAN.DWG

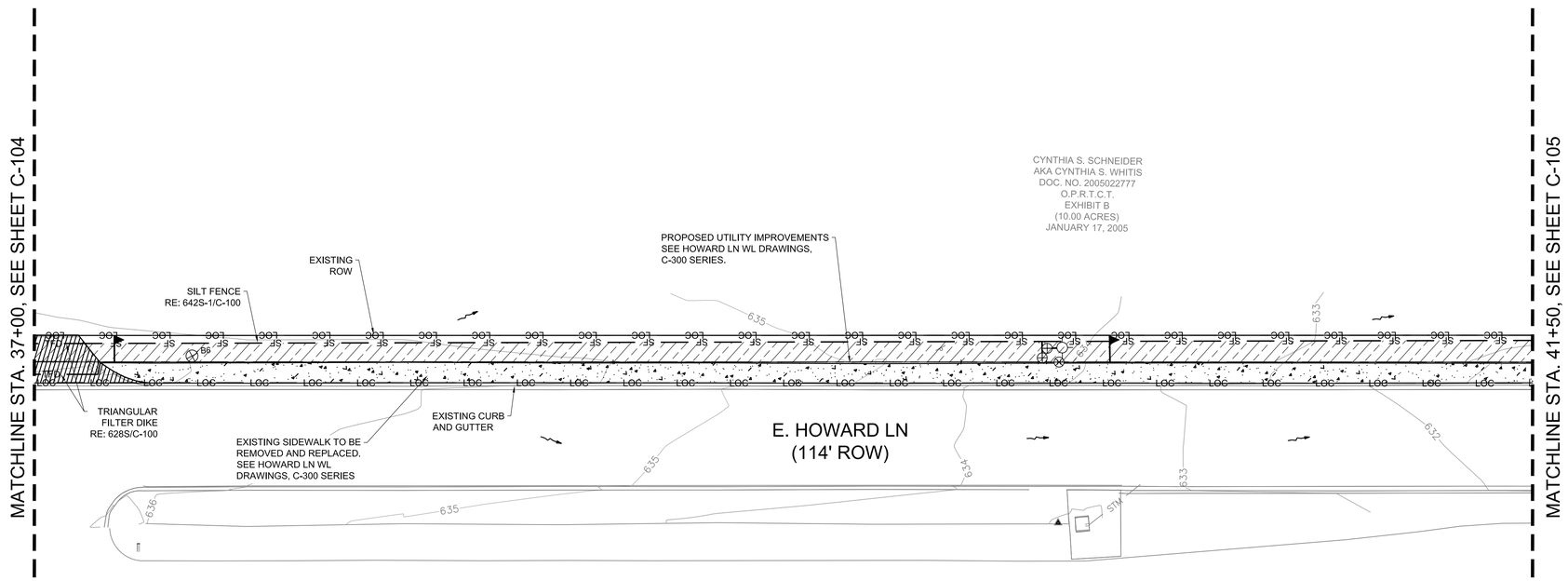

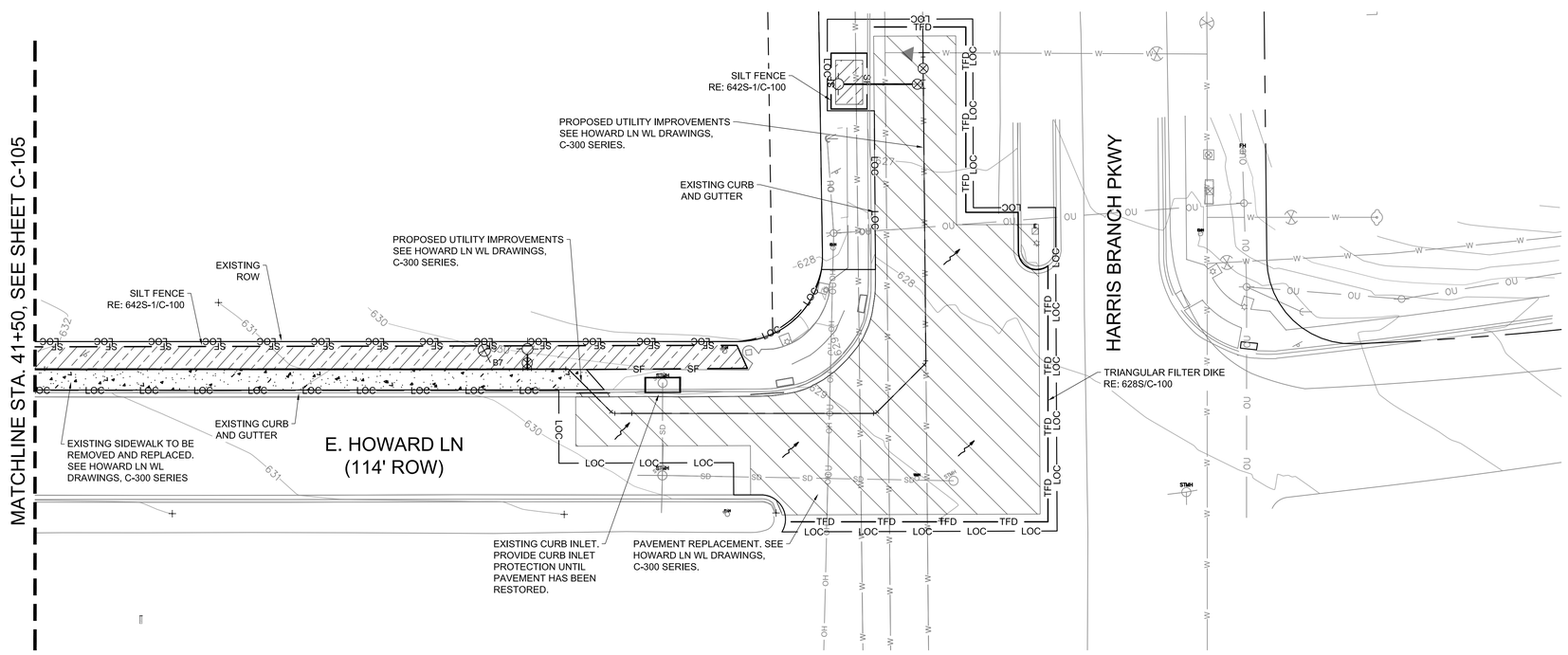

GENERAL NOTES

1. DISTURBED NATURAL AREAS REQUIRES NATIVE GRASSLANDS SEEDING AND PLANTING FOR EROSION CONTROL PER COA STANDARD SPECIFICATION 609S INCLUDING TOPSOIL AND SEED BED PREPARATION, TEMPORARY IRRIGATION, AND WEED MAINTENANCE.

LEGEND

— LOC — LOC — LOC —	LIMITS OF CONSTRUCTION
— TFD — TFD —	TRIANGULAR SEDIMENT FILTER DIKE
— TF — TF —	TREE PROTECTION FENCE
— SF — SF — SF —	SILT FENCE
	FLOW DIRECTION
	NATURAL AREAS TO BE DISTURBED
	ASPHALT PAVEMENT TO BE REMOVED AND REPLACED

ESTIMATED QUANTITIES

ITEM	UNIT	QUANTITY
SILT FENCE	LF	3,752
TRIANGULAR FILTER DIKE	LF	455
TREE PROTECTION FENCE	LF	72
DISTURBED NATURAL AREA TO BE RESTORED	SF	29,272

ESTIMATED QUANTITIES TABLE IS FOR FULL PROJECT AND NOT PER SHEET.

SCALE (IN FEET): 0 20 40

CITY OF AUSTIN

Jose I. Guerra, Inc.
Consulting Engineers
Structural • Civil • Mechanical • Electrical
TBPE FIRM F-3

STATE OF TEXAS
GLENN CHRISTOPHER PREY
123856
LICENSED PROFESSIONAL ENGINEER
3-14-2019

THESE DESIGN DOCUMENTS ARE NOT TO BE USED FOR CONSTRUCTION PRIOR TO REGULATORY SIGNATURE AND PERMIT.

GENERAL PERMIT OFFICE
EROSION AND SEDIMENT CONTROL PLAN
STA. 37+00 TO 44+50
HOWARD LANE WATER MAIN EXTENSION
AUSTIN, TX

REVISIONS

NO.	BY	DATE	REMARKS

SHEET INFORMATION
DATE 3/14/2019
SHEET 11 OF 36
CAD REF. NO. C-105

GENERAL PERMIT PROGRAM

F:\18004_HOWARD_LANE_WATER_MAIN\DRAWINGS\CAD\C102-C105 EROSION & SEDIMENT CONTROL PLAN.DWG

RIGHT OF WAY MANAGEMENT STANDARD NOTES

1. FOR RIGHT OF WAY VIOLATIONS INCLUDING BUT NOT LIMITED TO WORKING WITHOUT A PERMIT OR AN EXPIRED PERMIT WITHIN THE CITY OF AUSTIN ROW AN INVESTIGATION FEE WILL BE ASSESSED FOR EACH OFFENSE UNTIL THE VIOLATION IS CORRECTED. FOLLOWING IS THE INVESTIGATION FEE SCHEDULE FOR VIOLATIONS OF PUBLIC SAFETY:
   A. NO OR EXPIRED PERMIT = EQUAL TO THE COST OF THE PERMIT
   B. VIOLATION OF PERMIT CONDITIONS, RESTRICTION LIMITS, TIMES AND LOCATIONS ON ROW PERMIT = $250
   C. IMPROPER ADVANCE WARNING SIGN = $250
   D. IMPROPER USE OF DEVICE = $250
   E. FAILURE TO CORRECT DEFICIENCY = $500
   F. RESTRICTING TRAFFIC DURING PEAK HOURS = EQUAL TO THE COST OF THE PERMIT
   G. MULTIPLE VIOLATIONS = UP TO A 4 DAY SUSPENSION OF WORK

2. CONTRACTORS AND THEIR SUBCONTRACTORS MUST BE LICENSED BY THE CITY OF AUSTIN FOR CONDUCTING WORK WITHIN THE RIGHT OF WAY.

3. CONTRACTOR MUST OBTAIN RIGHT OF WAY EXCAVATION PERMITS FROM RIGHT OF WAY MANAGEMENT DIVISION, FOR EACH STREET PRIOR TO COMMENCEMENT OF WORK. PLEASE CALL (512) 974-1150 FOR ADDITIONAL INFORMATION REGARDING PERMITTING PROCESS AND THE MOST CURRENT RIGHT OF WAY PERMITTING FEE SCHEDULE.

4. FOR WORK AT SIGNALIZED INTERSECTIONS CONTRACTOR MUST DIAL 311 OR (512) 974-2000 TO INITIATE A CITIZENS SERVICE REQUEST (CSR) FOR THE TRAFFIC SIGNALS GROUP; TO COORDINATE AND GAIN APPROVAL A MINIMUM OF 1 WEEK PRIOR TO CHANGE OF PROJECT LOCATION OR PHASE.

5. CONTRACTOR SHALL HAVE AN APPROVED RIGHT OF WAY PERMIT ON SITE AT ALL TIMES WHEN WORKING IN THE ROW.

6. CONTRACTOR MUST DIAL 311 OR (512) 974-2000 TO INITIATE A CITIZENS SERVICE REQUEST (CSR) FOR RIGHT OF WAY MANAGEMENT A MINIMUM OF 1 WEEK PRIOR TO START OF WORK.

7. CONTRACTOR MUST PROVIDE TRAINING CERTIFICATION OF COMPETENT PERSON THAT WILL BE RESPONSIBLE FOR THE TRAFFIC CONTROL PLACEMENT, TO RIGHT OF WAY INSPECTOR, PRIOR TO START OF WORK.

8. STORAGE OF EQUIPMENT AND/OR MATERIAL WITHIN THE ROW.
   A. STORAGE OF EQUIPMENT IN THE ROW IS PERMISSIBLE ONLY WITHIN THE CURRENT LIMITS OF LONG-TERM OR INTERMEDIATE-TERM CLOSURES AND SHALL BE LIMITED TO THE EQUIPMENT REQUIRED FOR THE CURRENT WORK ACTIVITY. THIS EQUIPMENT SHALL BE PROTECTED BEHIND BARRICADES.
   B. STORAGE OF MATERIAL IN THE ROW IS PERMISSIBLE ONLY WITHIN THE CURRENT LIMITS OF LONG-TERM OR INTERMEDIATE-TERM CLOSURES AND SHALL BE LIMITED TO NO MORE THAN THE MATERIAL REQUIRED FOR THREE DAYS OF PRODUCTION. THIS MATERIAL SHALL BE PROTECTED BEHIND WATER-FILLED BARRIER.
   C. EQUIPMENT OR MATERIAL STORED IN THE ROW SHALL NOT CREATE A VISUAL BARRIER TO TRAFFIC.

9. NO MORE THAN ONE WORK ZONE LOCATION MAY BE SET AT ONE TIME.

STREETS

10. PEAK HOURS FOR ARTERIAL AND COLLECTOR STREETS ARE 6AM TO 9AM AND 4PM TO 6 PM, MONDAY THROUGH FRIDAY. NO DISRUPTION OR REDUCTION OF ACTIVE ROADWAY OR PEDESTRIAN ROUTE CAPACITY SHALL OCCUR DURING THESE TIMES, UNLESS ALLOWED BY TRAFFIC CONTROL PLAN.

11. EXCAVATIONS SHALL BE BACKFILLED OR PLATED WHEN REQUIRED TO OPEN IMPACTED TRAFFIC LANES. FOR EXCAVATIONS EXCEEDING A TRANSVERSE WIDTH OF 5 FEET, THE CONTRACTOR SHALL PROVIDE AN ENGINEERED PLATING PLAN TO THE OWNER'S REPRESENTATIVE FOR REVIEW BY RIGHT OF WAY MANAGEMENT DIVISION. PER 804S-4, 5 OF 9

12. EXISTING SIDEWALKS AND BEATEN PATHS SHALL BE MAINTAINED AS ADA COMPLIANT THROUGHOUT THE PROJECT DURATION WITH THE EXCEPTION OF FINAL FLATWORK AND UTILITY TIE- INS. ANY WORK OVERHEAD WITHIN 25 FEET OF EXISTING PEDESTRIAN PATHWAYS WILL REQUIRE PEDESTRIAN COVERED WALKWAYS. SIDEWALK CLOSURES FOR MAJOR SIDEWALK IMPROVEMENTS HAVE A 14-DAY MAXIMUM PERIOD AND SHALL BE COMPLETED IN PHASES AS TO NOT CLOSE MORE THAN ONE BLOCK AT A TIME.

13. "ROAD WORK AHEAD" AND "CONSTRUCTION ENTRANCE AHEAD" SIGNS MUST BE PLACED AT ALL APPROACHES TO STABILIZED CONSTRUCTION ENTRANCE. SEE THE CITY OF AUSTIN STANDARD DETAILS FOR SIGN SPACING.

14. DRIVEWAYS SHALL NOT BE CLOSED FOR MORE THAN 3 CONSECUTIVE CALENDAR DAYS

15. ADA COMPLIANCE SHALL BE MAINTAINED THROUGH STABILIZED CONSTRUCTION ENTRANCE.

16. BARRIER SHALL BE PLACED WITHIN GUIDELINES SET FORTH BY THE TMUTCD CRASH TESTING REQUIREMENTS (NCHRP REPORT 350) FOR THAT PARTICULAR BARRIER USED. ANY MODIFICATIONS TO THAT TESTING APPLICATION SHALL BE APPROVED BY THE ENGINEER OF RECORD.

17. FOR OVERNIGHT PROTECTION OF WORK ZONES WITHIN THE ROW, REFER TO CITY OF AUSTIN STANDARD 804S-4 SERIES DETAILS.

18. ALL TEMPORARY PAVING SHALL CONFORM TO CITY OF AUSTIN STANDARD DETAIL 1100S-4.

19. INITIAL AND PHASE CHANGE TRAFFIC CONTROL CHANGES SHALL BE INSTALLED ON THE WEEKENDS.

20. THE NAME AND TELEPHONE NUMBER OF THE CONTRACTOR OR SUPPLIER SHALL BE SHOWN ON THE NON-REFLECTIVE SURFACE OF ALL CHANNELIZING DEVICES IN ACCORDANCE WITH THE CITY OF AUSTIN STANDARD 800 SERIES DETAILS.

TRAFFIC CONTROL GENERAL NOTES

1. ALL TRAFFIC CONTROL DEVICES, SIGNS, BARRICADES AND WARNING SIGNS SHALL BE FURNISHED, PLACED, CONSTRUCTED AND MAINTAINED IN THE APPROPRIATE TYPES SIZES AND FLAGGER OPERATIONS EXECUTED IN ACCORDANCE WITH THE CURRENT EDITION OF THE TEXAS MANUAL ON UNIFORM CONTROL DEVICES (TMUTCD), THE CITY OF AUSTIN STANDARD SPECIFICATIONS SERIES 800 AND THE CITY OF AUSTIN TRANSPORTATION CRITERIA MANUAL, OR AS DIRECTED BY THE ENGINEER OR DESIGNATED REPRESENTATIVE. IF A CONFLICT ARISES THEN THE CITY OF AUSTIN TRANSPORTATION CRITERIA MANUAL SHALL CONTROL UNLESS OTHERWISE INSTRUCTED BY THE ENGINEER OR DESIGNATED REPRESENTATIVE.

2. WHERE ACTIVITIES OCCUPY AN ARTERIAL ROADWAY FOR THREE OR MORE DAYS, ONE WEEK ADVANCE PUBLIC NOTIFICATION MUST BE PROVIDED IN THE FORMS DESCRIBED BELOW. CLOSURES THAT CHANGE IN SCOPE OR NATURE MUST ALLOW A FULL WEEK TO PROVIDE RE-NOTICE OF THE PLANNED ACTIVITY, PRIOR TO STARTING WORK.

3. ELECTRONIC CHANGEABLE MESSAGE BOARDS.
   A. WRITTEN NOTICE TO AFFECTED PARTIES (RESIDENTS AND BUSINESSES) WITHIN THE CLOSURE.
   B. NOTIFICATION SENT TO THE MEDIA DESCRIBING THE ACTIVITY AND ITS' DURATION, ALONG WITH A VISUAL MAP OF THE CLOSURE AREA. CONDUCT MEDIA AVAILABILITY AS NEEDED.
   C. NOTIFICATION SENT TO THE DOWNTOWN AUSTIN ALLIANCE TRANSPORTATION AND AUSTIN CHAMBER OF COMMERCE REPRESENTATIVES FOR CLOSURES IN THE DOWNTOWN AUSTIN PROJECT COORDINATION AREA.
   D. NOTIFICATION TO THE CITY'S CPIO OFFICE AND 311 SYSTEM (FRANCES HARGROVE) OF UP COMING CONSTRUCTION WORK IN PUBLIC RIGHT OF WAY.

4. CONTRACTOR SHALL ABIDE BY CITY OF AUSTIN NOISE ORDINANCE AT ALL TIMES.

5. FOR TEMPORARY LANE CLOSURES WHEN PAVING AND WHEN WORKING IN INTERSECTIONS, THE CONTRACTOR SHALL PROVIDE ONE (1) FULL-TIME OFF-DUTY, UNIFORMED CERTIFIED PEACE OFFICER AND ONE (1) VEHICLE OF THE TYPE APPROVED BY THE ENGINEER DESIGNATED REPRESENTATIVE AS PART OF THE TRAFFIC CONTROL OPERATIONS. THE PEACE OFFICER SHALL BE ABLE TO SHOW PROOF OF CERTIFICATION BY THE TEXAS COMMISSION ON LAW ENFORCEMENT OFFICER STANDARDS.

6. THE CONTRACTOR SHALL MAINTAIN DRIVEWAY ACCESS AT ALL TIMES. IF ACCESS CANNOT BE MAINTAINED, THE CONTRACTOR WITH THE APPROVAL OF THE ENGINEER DESIGNATED REPRESENTATIVE SHALL PROVIDE AT LEAST 24 HOUR WRITTEN NOTICE OF LIMITED ACCESS TO AFFECTED PROPERTY OWNERS. THE CONTRACTOR SHALL PROVIDE BUSINESS ACCESS SIGNS AS NEEDED TO INFORM DRIVERS OF THE LOCATIONS OF ALL BUSINESS DRIVEWAYS.

7. WHERE REQUIRED, "NO PARKING, TOW AWAY" SIGNS SHALL BE PLACED 48 HOURS IN ADVANCE OF ASSOCIATED LANE OR ROAD CLOSURES.

8. PEDESTRIAN FENCING, AS PER COA STANDARD 804S-4 1 AND 2 OF 8, SHALL BE USED ALONG ALL WORK AREAS TO SEPARATE PEDESTRIANS FROM THE WORK AREAS.

9. WHERE SIDEWALKS OR WELL DEFINED PATHWAYS ARE PRESENT, ADA COMPLIANT SIDEWALK CLOSURES, CROSSWALK CLOSURES OR WALKWAY BYPASS DEPENDING ON WORK DURATIONS SHALL BE PROVIDED ANYTIME THESE SIDEWALKS OR PATHWAYS ARE OBSTRUCTED BY WORK ACTIVITIES.

10. SIDEWALK AND CROSSWALK CLOSURES SHALL BE INSTALLED AS PER COA STANDARD 804S-1 4 OF 9 WHEN CONSTRUCTION ACTIVITIES AND TEMPORARY PEDESTRIAN FENCING BLOCK ACCESS, LIMITED TO ONE BLOCK AT A TIME.

11. MINIMUM 3:1 SAFETY SLOPE SHALL BE MAINTAINED AS PER COA STANDARD 804S-4 4 OF 9. FOR EXCAVATIONS EXCEEDING 6 FEET THE CONTRACTOR SHALL REFER TO STANDARD SPECIFICATION SECTIONS 803S .1, .2, .4, .5, AND .7 BEFORE STARTING ANY WORK IN THE ROW. IF ROADWAY WILL BE OPENED TO TRAFFIC (ADJACENT TO OR OVER EXCAVATED AREA) EXCAVATION SHALL BE BACKFILLED AND COLD MIXED AS CONSTRUCTION PROGRESSES WITH LAST 30 FEET PLATED (COA STANDARD 804S-4 5, 6, AND 7 OF 9) TO MEET COA SAFETY SLOPE REQUIREMENTS. ALL TEMPORARY EXCAVATION REPAIRS SHALL BE IN ACCORDANCE WITH PLANS AND CONTRACT DOCUMENTS.

12. THE FIVE CATEGORIES OF WORK DURATION AND THEIR TIME AT A LOCATION SHALL BE:
   A. LONG-TERM STATIONARY IS WORK THAT OCCUPIES A LOCATION MORE THAN 3 DAYS.
   B. INTERMEDIATE-TERM STATIONARY IS WORK THAT OCCUPIES A LOCATION MORE THAN ONE DAYLIGHT PERIOD UP TO 3 DAYS OR NIGHTTIME WORK LASTING MORE THAN 1 HOUR.
   C. SHORT-TERM STATIONARY IS DAYTIME WORK THAT OCCUPIES A LOCATION FOR MORE THAN 1 HOUR, BUT LESS THAN 12 HOURS.
   D. SHORT DURATION IS WORK THAT OCCUPIES A LOCATION UP TO 1 HOUR.
   E. MOBILE IS WORK THAT MOVES INTERMITTENTLY OR CONTINUOUSLY.

13. ALL TRAFFIC CONTROL DEVICES SHALL BE REMOVED FROM THE RIGHT-OF-WAY ONCE RIGHT-OF-WAY ACTIVITIES ARE COMPLETE.

BARRICADING TABLES

STREETS

STREET	CLASSIFICATION	SPEED LIMIT	PROTECTION	STREET FROM	STREET TO	PLANNED IMPROVEMENTS	TCP SHEET	TCP TYPE	CATEGORY	ALLOWED BARRICADING HOURS	DURATION
HOWARD LN	ARTERIAL	50	N/A	AT HARRIS BRANCH PKWY		WATERLINE TRENCHING	C-201	BIKE AND LANE CLOSURES	SHORT TERM STATIONARY	M-F 9:00AM - 4:00PM S-S 7:00AM - 7:00PM	
HARRIS BRANCH PKWY	ARTERIAL	50	N/A	AT HOWARD LN		WATERLINE TRENCHING	C-202	LANE CLOSURES	SHORT TERM STATIONARY	M-F 9:00AM - 4:00PM S-S 7:00AM - 7:00PM	
HOWARD LN	ARTERIAL	50	N/A	HARRIS BRANCH PKWY	GREGG LN	WATERLINE TRENCHING	C-203	BIKE AND LANE CLOSURE	SHORT TERM STATIONARY	M-F 9:00AM - 4:00PM S-S 7:00AM - 7:00PM	
HOWARD LN	ARTERIAL	50	N/A	AT GREGG LN		WATERLINE TRENCHING	C-204	BIKE AND LANE CLOSURE	SHORT TERM STATIONARY	M-F 9:00AM - 4:00PM S-S 7:00AM - 7:00PM	

INTERSECTIONS

STREET INTERSECTION	PLANNED IMPROVEMENTS	TCP SHEET	ALLOWED BARRICADING HOURS	DURATION
HOWARD LN / HARRIS BRANCH PKWY	PAVEMENT RESTORATION PHASE A	C-205 & C-206	M-F 9:00AM - 4:00PM S-S 7:00AM - 7:00PM	
HOWARD LN / HARRIS BRANCH PKWY	PAVEMENT RESTORATION PHASE B	C-207 & C-208	M-F 9:00AM - 4:00PM S-S 7:00AM - 7:00PM	
HOWARD LN / HARRIS BRANCH PKWY	PAVEMENT RESTORATION PHASE C	C-209 - C-211	M-F 9:00AM - 4:00PM S-S 7:00AM - 7:00PM	
HOWARD LN / HARRIS BRANCH PKWY	PAVEMENT RESTORATION PHASE D	C-212 - C-214	M-F 9:00AM - 4:00PM S-S 7:00AM - 7:00PM	

REV. NO.	REVISION DESCRIPTION	APPROVED BY:	DATE

HVJ ASSOCIATES
1701 DIRECTOR'S BLVD
STE. 910
AUSTIN, TX 78744
(737) 222-5151
TEXAS FIRM NO. F-000646

TRAFFIC CONTROL NOTES AND BARRICADING TABLE

HOWARD LANE WATER MAIN EXTENSION
AUSTIN, TX

PROJ. NO. AG1610160.5.1-P
DESIGN: RCJ
DRAWN: RCJ
CHECK: LLB
APPR: RCJ
DATE: 3/1/19

STATE OF TEXAS
REUBEN C. JAMES
107426
LICENSED PROFESSIONAL ENGINEER
3/1/19

THESE DESIGN DOCUMENTS ARE NOT TO BE USED FOR CONSTRUCTION PRIOR TO REGULATORY SIGNATURE AND PERMIT.

SHEET
C-200

Dwg Info: P:\civil\Projects\2016\AG-16-10160.5.1-P Howard Ln TCPs, Cobb Fendley\CAD\TCP_00_Howard.dwg - Tab: NOTES - Plotted: 3/1/2019 4:27 PM By: REUBEN JAMES

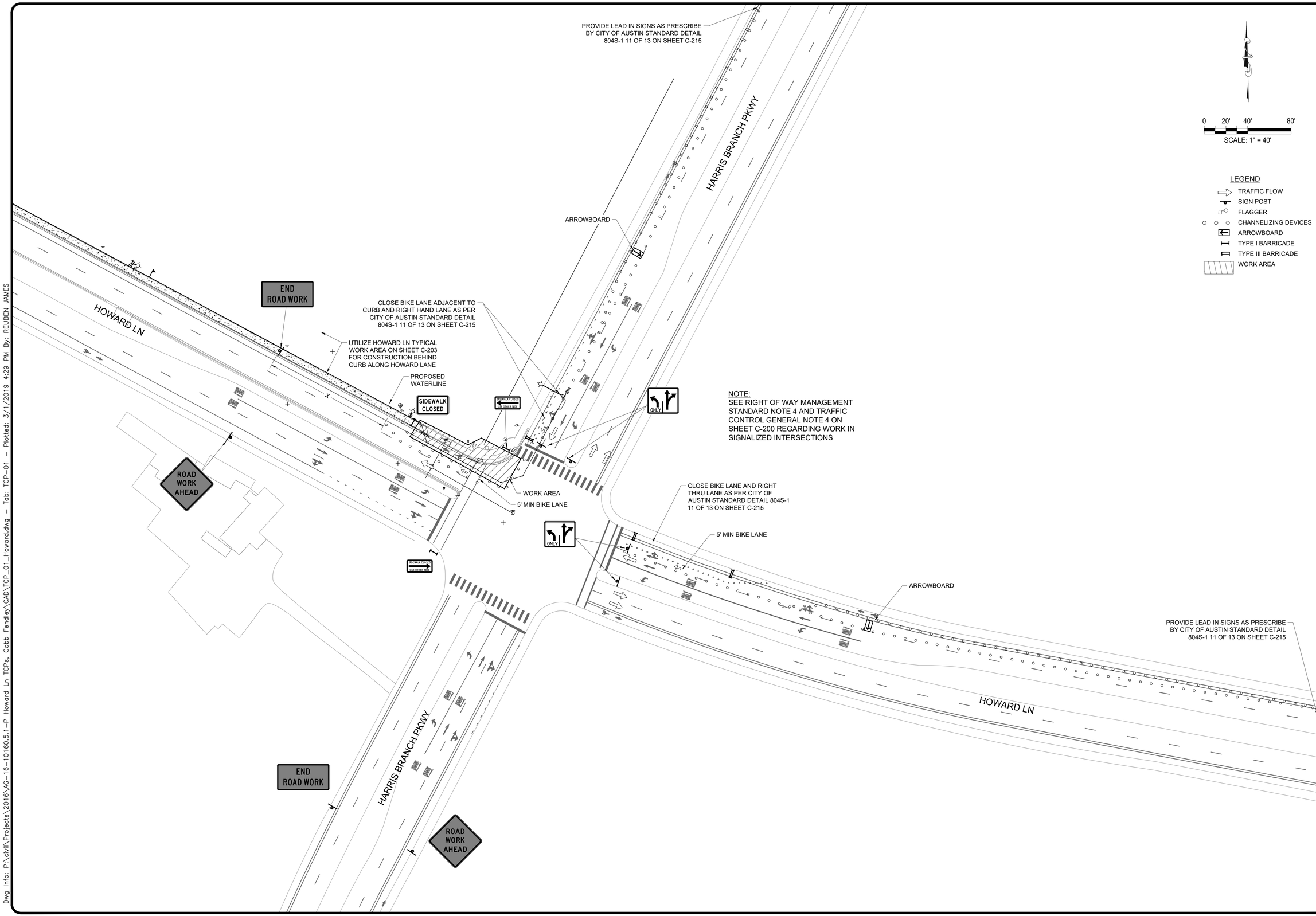

NOTE:
SEE RIGHT OF WAY MANAGEMENT STANDARD NOTE 4 AND TRAFFIC CONTROL GENERAL NOTE 4 ON SHEET C-200 REGARDING WORK IN SIGNALIZED INTERSECTIONS

LEGEND

- TRAFFIC FLOW
- SIGN POST
- FLAGGER
- CHANNELIZING DEVICES
- ARROWBOARD
- TYPE I BARRICADE
- TYPE III BARRICADE
- WORK AREA

REV. NO.	REVISION DESCRIPTION	APPROVED BY:	DATE

HVJ ASSOCIATES
1701 DIRECTOR'S BLVD
STE. 910
AUSTIN, TX 78744
(737) 222-5151
TEXAS FIRM NO. F-000646

TRAFFIC CONTROL
HOWARD LN AT HARRIS BRANCH PKWY

HOWARD LANE WATER MAIN EXTENSION
AUSTIN, TX

PROJ. NO. AG1610160.5.1-P
DESIGN: RCJ
DRAWN: RCJ
CHECK: LLB
APPR: RCJ
DATE: 3/1/19

STATE OF TEXAS
REUBEN C. JAMES
107426
LICENSED
PROFESSIONAL ENGINEER
3/1/19

THESE DESIGN DOCUMENTS ARE NOT TO BE USED FOR CONSTRUCTION PRIOR TO REGULATORY SIGNATURE AND PERMIT.

SHEET
C-201

Dwg Info: P:\civil\Projects\2016\AG-16-10160.5.1-P Howard Ln TCPs, Cobb Fendley\CAD\TCP_01_Howard.dwg - Tab: TCP-01 - Plotted: 3/1/2019 4:29 PM By: REUBEN JAMES

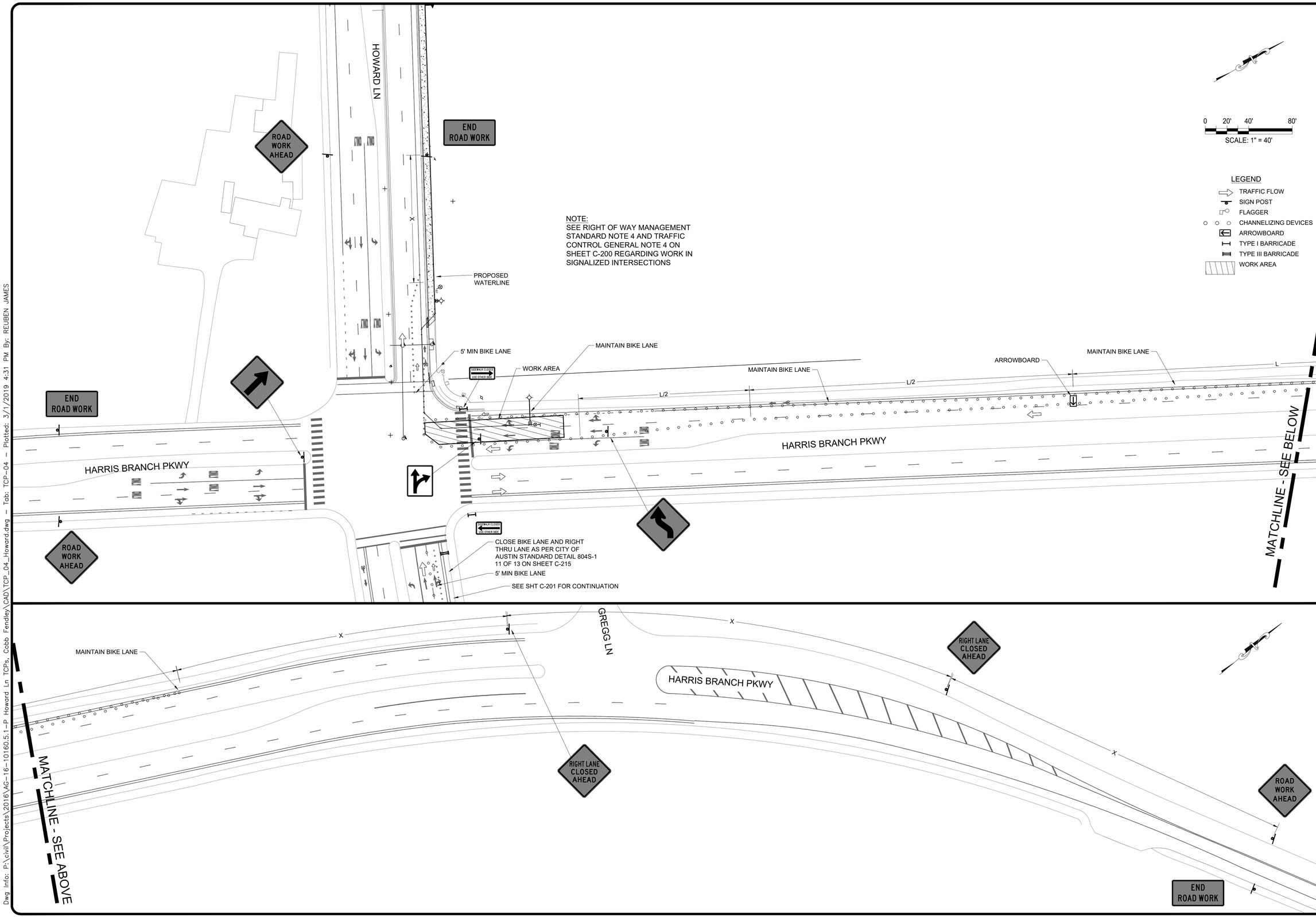

NOTE:
SEE RIGHT OF WAY MANAGEMENT STANDARD NOTE 4 AND TRAFFIC CONTROL GENERAL NOTE 4 ON SHEET C-200 REGARDING WORK IN SIGNALIZED INTERSECTIONS

0 20' 40' 80'
SCALE: 1" = 40'

LEGEND
- TRAFFIC FLOW
- SIGN POST
- FLAGGER
- CHANNELIZING DEVICES
- ARROWBOARD
- TYPE I BARRICADE
- TYPE III BARRICADE
- WORK AREA

REV. NO.	REVISION DESCRIPTION	APPROVED BY:	DATE

HVJ ASSOCIATES
1701 DIRECTOR'S BLVD
STE. 910
AUSTIN, TX 78744
(737) 222-5151
TEXAS FIRM NO. F-000646

TRAFFIC CONTROL HARRIS BRANCH PKWY AT HOWARD LN

HOWARD LANE WATER MAIN EXTENSION
AUSTIN, TX

PROJ. NO. AG16101160.5.1-P
DESIGN: RCJ
DRAWN: RCJ
CHECK: LLB
APPR: RCJ
DATE: 3/1/19

STATE OF TEXAS
REUBEN C. JAMES
107426
LICENSED PROFESSIONAL ENGINEER
3/1/19

THESE DESIGN DOCUMENTS ARE NOT TO BE USED FOR CONSTRUCTION PRIOR TO REGULATORY SIGNATURE AND PERMIT.

SHEET
C-202

Dwg Info: P:\civil\Projects\2016\AG-16-10160.5.1-P Howard Ln TCPs, Cobb Fendley\CAD\TCP_04_Howard.dwg - Tab: TCP-04 - Plotted: 3/1/2019 4:31 PM By: REUBEN JAMES

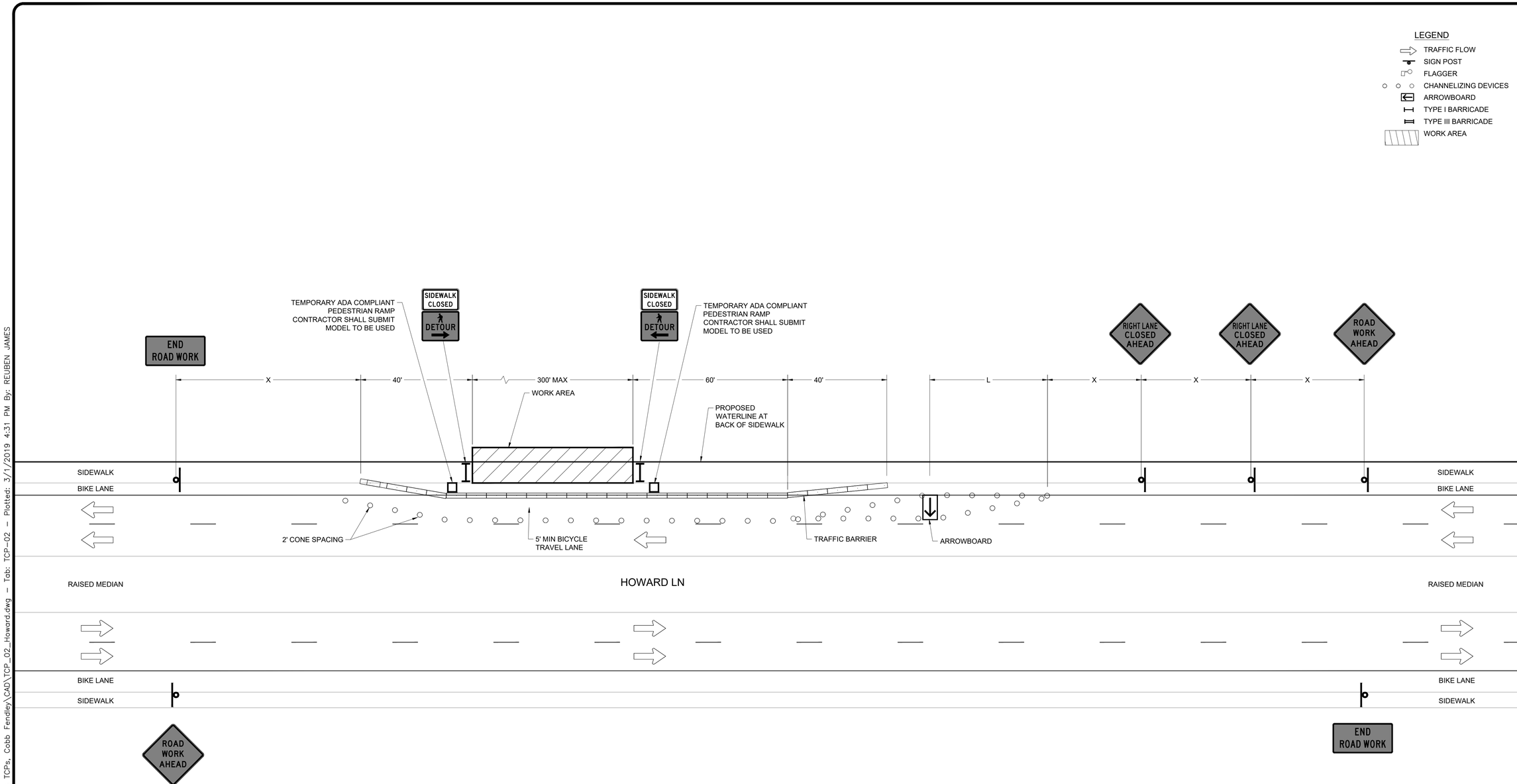

REV. NO.	REVISION DESCRIPTION	APPROVED BY:	DATE

HVJ ASSOCIATES
1701 DIRECTOR'S BLVD
STE. 910
AUSTIN, TX 78744
(737) 222-5151
TEXAS FIRM NO. F-000646

TRAFFIC CONTROL HOWARD LN TYPICAL WORK AREA

HOWARD LANE WATER MAIN EXTENSION
AUSTIN, TX

PROJ. NO. AG16101160.5.1-P
DESIGN: RCJ
DRAWN: RCJ
CHECK: LLB
APPR: RCJ
DATE: 3/1/19

STATE OF TEXAS
REUBEN C. JAMES
107426
LICENSED
PROFESSIONAL ENGINEER
3/1/19

THESE DESIGN DOCUMENTS ARE NOT TO BE USED FOR CONSTRUCTION PRIOR TO REGULATORY SIGNATURE AND PERMIT.

SHEET
C-203

Dwg Info: P:\civil\Projects\2016\AG-16-10160.5.1-P Howard Ln TCPs, Cobb Fendley\CAD\TCP_02_Howard.dwg - Tab: TCP-02 - Plotted: 3/1/2019 4:31 PM By: REUBEN JAMES

END ROAD WORK

ROAD WORK AHEAD

HOWARD LN

60'

TWO SIGNS BACK-TO-BACK

PROPOSED WATERLINE NO TRAFFIC CONTROL REQUIRED FOR THIS SECTION

SIDEWALK CLOSED

WORK AREA

DETOUR

ROAD CLOSED

DETOUR

SIDEWALK CLOSED

UTILIZE HOWARD LN TYPICAL WORK AREA ON SHEET C-203 FOR CONSTRUCTION BEHIND CURB ALONG HOWARD LANE

PROPOSED WATERLINE

ROAD CLOSED

GREGG LN

HOWARD LN

PRIVATE DRIVE CLOSED TO PUBLIC ACCESS

ROAD WORK AHEAD

END ROAD WORK

0 20' 40' 80'

SCALE: 1" = 40'

LEGEND

- TRAFFIC FLOW
- SIGN POST
- FLAGGER
- CHANNELIZING DEVICES
- ARROWBOARD
- TYPE I BARRICADE
- TYPE III BARRICADE
- WORK AREA

0 250' 500' 1,000'

SCALE: 1" = 500'

GREGG LN

HOWARD LN

ROAD CLOSED TO THRU TRAFFIC

HARRIS BRANCH PKWY

GREGG LN

DETOUR

DETOUR ROUTE

REV. NO.	REVISION DESCRIPTION	APPROVED BY:	DATE

HVJ ASSOCIATES
1701 DIRECTOR'S BLVD
STE. 910
AUSTIN, TX 78744
(737) 222-5151
TEXAS FIRM NO. F-000646

TRAFFIC CONTROL HOWARD LN AT GREGG LN

HOWARD LANE WATER MAIN EXTENSION
AUSTIN, TX

CITY OF AUSTIN FOUNDED 1839

PROJ. NO. AG1610160.5.1-P
DESIGN: RCJ
DRAWN: RCJ
CHECK: LLB
APPR: RCJ
DATE: 3/1/19

STATE OF TEXAS
REUBEN C. JAMES
107426
LICENSED PROFESSIONAL ENGINEER
3/1/19

THESE DESIGN DOCUMENTS ARE NOT TO BE USED FOR CONSTRUCTION PRIOR TO REGULATORY SIGNATURE AND PERMIT.

SHEET
C-204

Dwg Info: P:\civil\Projects\2016\AG-16-10160.5.1-P Howard Ln TCPs, Cobb Fendley\CAD\TCP_03_Howard.dwg - Tab: TCP-03 - Plotted: 3/1/2019 4:33 PM By: REUBEN JAMES

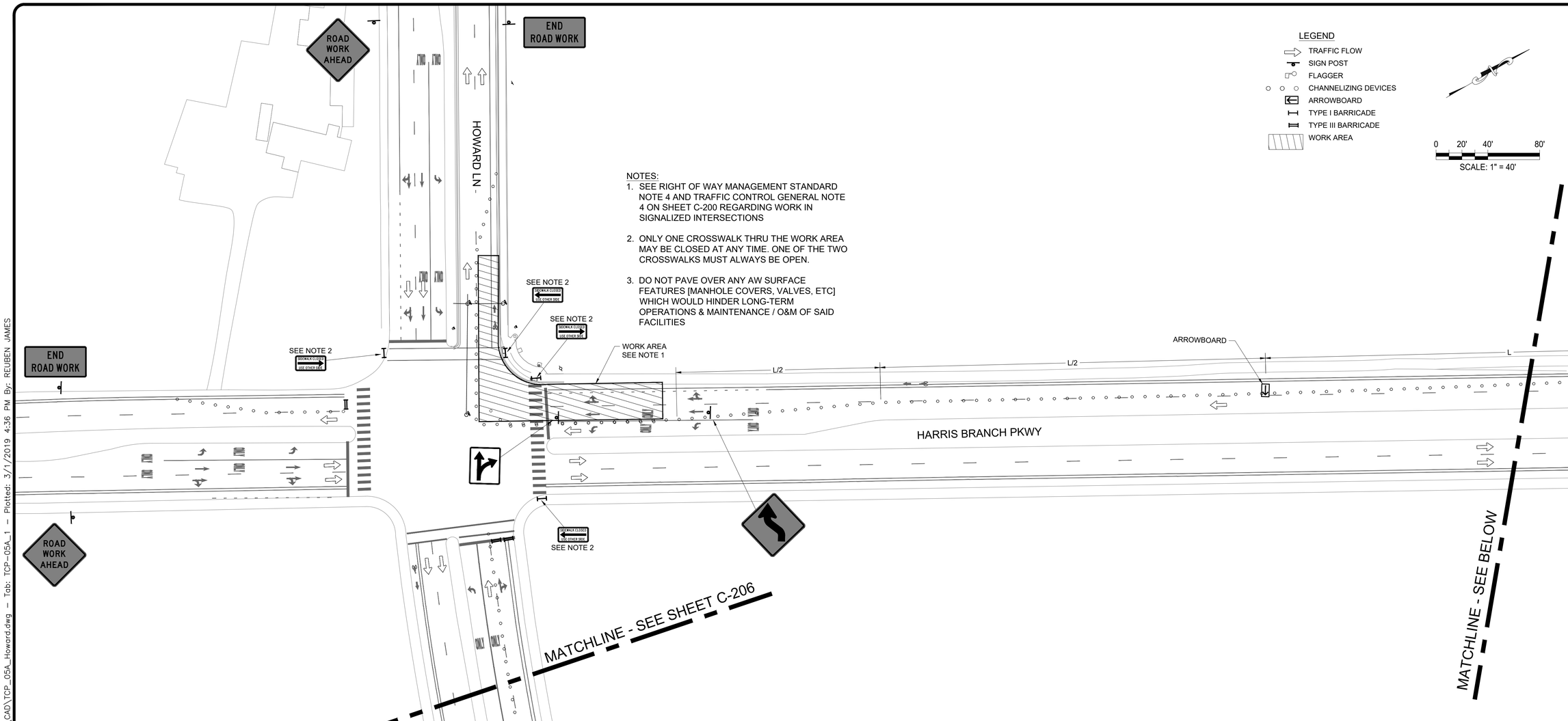

NOTES:

1. SEE RIGHT OF WAY MANAGEMENT STANDARD NOTE 4 AND TRAFFIC CONTROL GENERAL NOTE 4 ON SHEET C-200 REGARDING WORK IN SIGNALIZED INTERSECTIONS
2. ONLY ONE CROSSWALK THRU THE WORK AREA MAY BE CLOSED AT ANY TIME. ONE OF THE TWO CROSSWALKS MUST ALWAYS BE OPEN.
3. DO NOT PAVE OVER ANY AW SURFACE FEATURES [MANHOLE COVERS, VALVES, ETC] WHICH WOULD HINDER LONG-TERM OPERATIONS & MAINTENANCE / O&M OF SAID FACILITIES

LEGEND

- TRAFFIC FLOW
- SIGN POST
- FLAGGER
- CHANNELIZING DEVICES
- ARROWBOARD
- TYPE I BARRICADE
- TYPE III BARRICADE
- WORK AREA

0 20' 40' 80'

SCALE: 1" = 40'

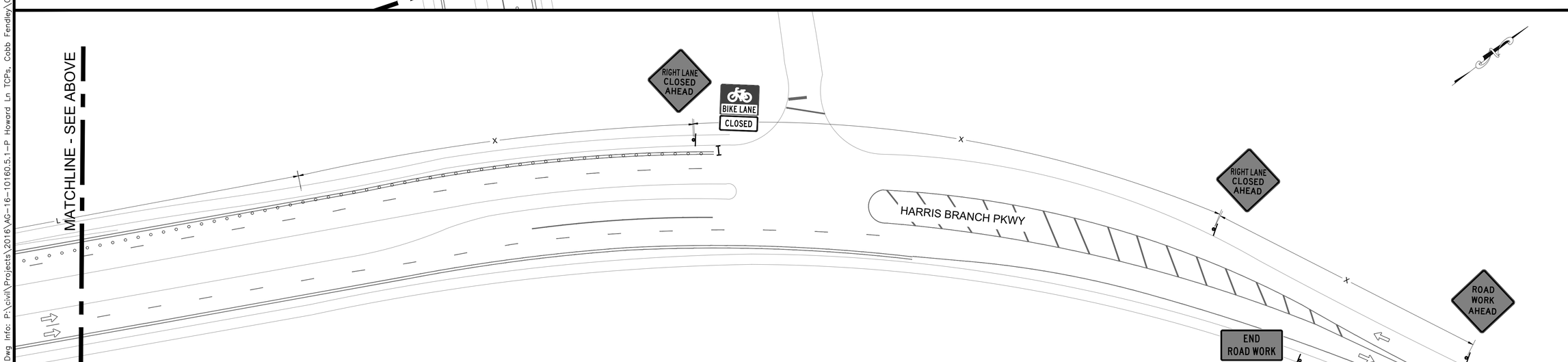

REV. NO.	REVISION DESCRIPTION	APPROVED BY:	DATE

HVJ ASSOCIATES
1701 DIRECTOR'S BLVD
STE. 910
AUSTIN, TX 78744
(737) 222-5151
TEXAS FIRM NO. F-000646

TRAFFIC CONTROL PAVEMENT RESTORATION PHASE A SHEET 1 OF 2

HOWARD LANE WATER MAIN EXTENSION
AUSTIN, TX

PROJ. NO. AG1610160.5.1-P
DESIGN: RCJ
DRAWN: RCJ
CHECK: LLB
APPR: RCJ
DATE: 3/1/19

STATE OF TEXAS
REUBEN C. JAMES
107426
LICENSED PROFESSIONAL ENGINEER
3/1/19

THESE DESIGN DOCUMENTS ARE NOT TO BE USED FOR CONSTRUCTION PRIOR TO REGULATORY SIGNATURE AND PERMIT.

SHEET
C-205

Dwg Info: P:\civil\Projects\2016\AG-16-10160.5.1-P Howard Ln TCPs, Cobb Fendley\CAD\TCP_05A_Howard.dwg – Tab: TCP-05A_1 – Plotted: 3/1/2019 4:36 PM By: REUBEN JAMES

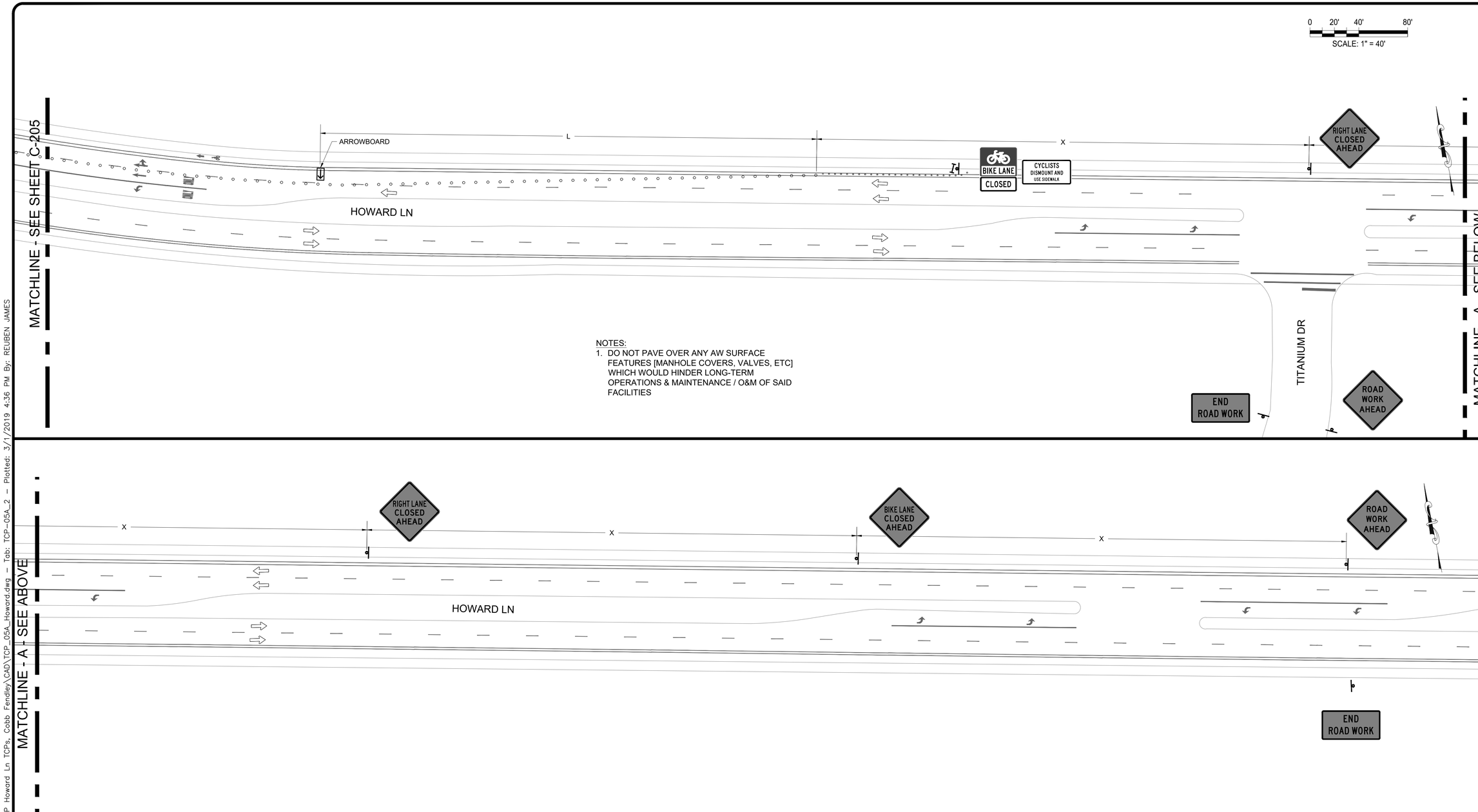

NOTES:

1. DO NOT PAVE OVER ANY AW SURFACE FEATURES [MANHOLE COVERS, VALVES, ETC] WHICH WOULD HINDER LONG-TERM OPERATIONS & MAINTENANCE / O&M OF SAID FACILITIES

LEGEND

- TRAFFIC FLOW
- SIGN POST
- FLAGGER
- CHANNELIZING DEVICES
- ARROWBOARD
- TYPE I BARRICADE
- TYPE III BARRICADE
- WORK AREA

REV. NO.	REVISION DESCRIPTION	APPROVED BY:	DATE

HVJ ASSOCIATES
1701 DIRECTOR'S BLVD
STE. 910
AUSTIN, TX 78744
(737) 222-5151
TEXAS FIRM NO. F-000646

TRAFFIC CONTROL PAVEMENT RESTORATION PHASE A SHEET 2 OF 2

HOWARD LANE WATER MAIN EXTENSION
AUSTIN, TX

PROJ. NO. AG1610160.5.1-P
DESIGN: RCJ
DRAWN: RCJ
CHECK: LLB
APPR: RCJ
DATE: 3/1/19

STATE OF TEXAS
REUBEN C. JAMES
107426
LICENSED
PROFESSIONAL ENGINEER
3/1/19

THESE DESIGN DOCUMENTS ARE NOT TO BE USED FOR CONSTRUCTION PRIOR TO REGULATORY SIGNATURE AND PERMIT.

SHEET
C-206

Dwg Info: P:\civil\Projects\2016\AG-16-10160.5.1-P Howard Ln TCPs, Cobb Fendley\CAD\TCP_05A_Howard.dwg - Tab: TCP-05A_2 - Plotted: 3/1/2019 4:36 PM By: REUBEN JAMES

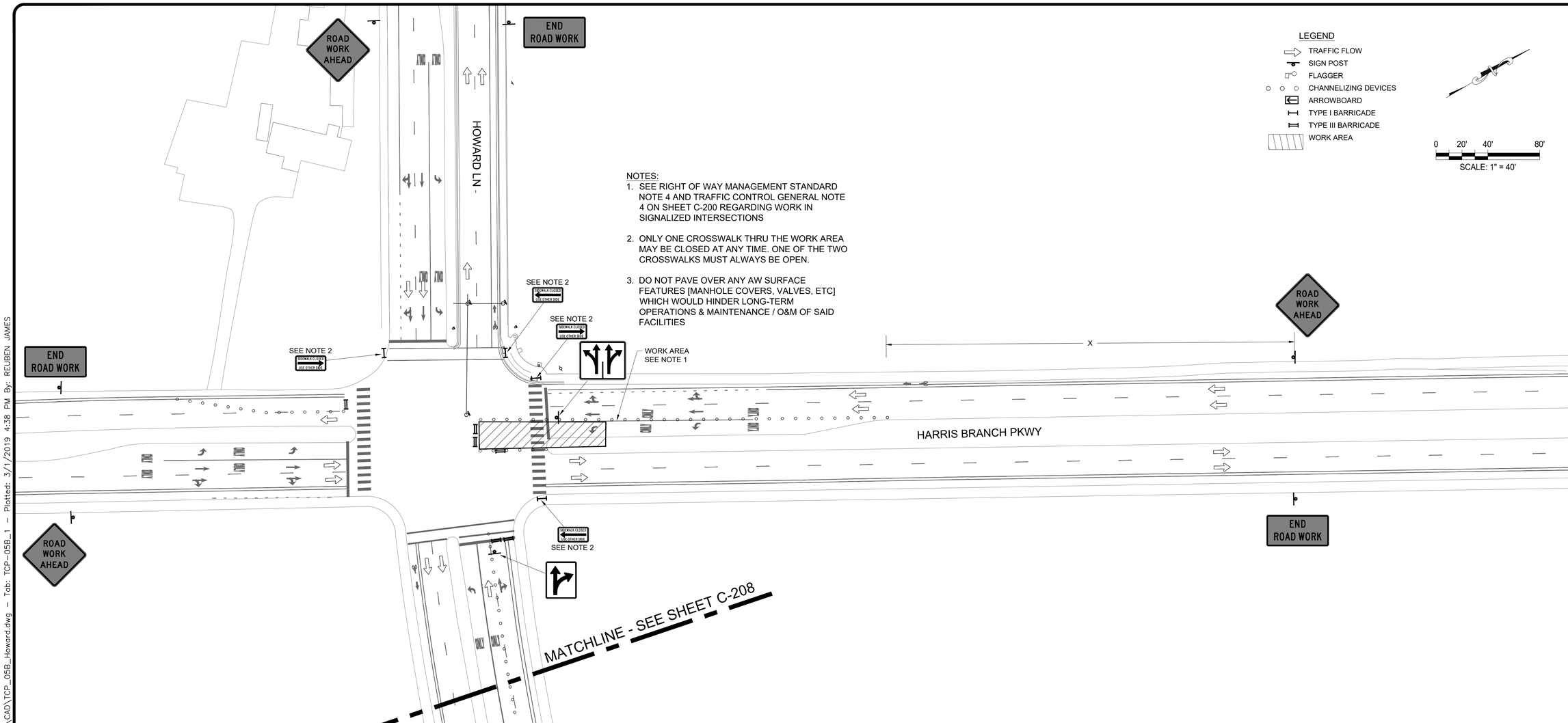

NOTES:

1. SEE RIGHT OF WAY MANAGEMENT STANDARD NOTE 4 AND TRAFFIC CONTROL GENERAL NOTE 4 ON SHEET C-200 REGARDING WORK IN SIGNALIZED INTERSECTIONS
2. ONLY ONE CROSSWALK THRU THE WORK AREA MAY BE CLOSED AT ANY TIME. ONE OF THE TWO CROSSWALKS MUST ALWAYS BE OPEN.
3. DO NOT PAVE OVER ANY AW SURFACE FEATURES [MANHOLE COVERS, VALVES, ETC] WHICH WOULD HINDER LONG-TERM OPERATIONS & MAINTENANCE / O&M OF SAID FACILITIES

LEGEND

- TRAFFIC FLOW
- SIGN POST
- FLAGGER
- CHANNELIZING DEVICES
- ARROWBOARD
- TYPE I BARRICADE
- TYPE III BARRICADE
- WORK AREA

0 20' 40' 80'
SCALE: 1" = 40'

REV. NO.	REVISION DESCRIPTION	APPROVED BY:	DATE

HVJ ASSOCIATES
1701 DIRECTOR'S BLVD
STE. 910
AUSTIN, TX 78744
(737) 222-5151
TEXAS FIRM NO. F-000646

TRAFFIC CONTROL PAVEMENT RESTORATION PHASE B SHEET 1 OF 2

HOWARD LANE WATER MAIN EXTENSION
AUSTIN, TX

CITY OF AUSTIN
FOUNDED 1839

PROJ. NO. AG1610160.5.1-P
DESIGN: RCJ
DRAWN: RCJ
CHECK: LLB
APPR: RCJ
DATE: 3/1/19

STATE OF TEXAS
REUBEN C. JAMES
107426
LICENSED
PROFESSIONAL ENGINEER
3/1/19

THESE DESIGN DOCUMENTS ARE NOT TO BE USED FOR CONSTRUCTION PRIOR TO REGULATORY SIGNATURE AND PERMIT.

SHEET
C-207

Dwg Info: P:\civil\Projects\2016\AG-16-10160.5.1-P Howard Ln TCPs, Cobb Fendley\CAD\TCP_05B_Howard.dwg - Tab: TCP-05B_1 - Plotted: 3/1/2019 4:38 PM By: REUBEN JAMES

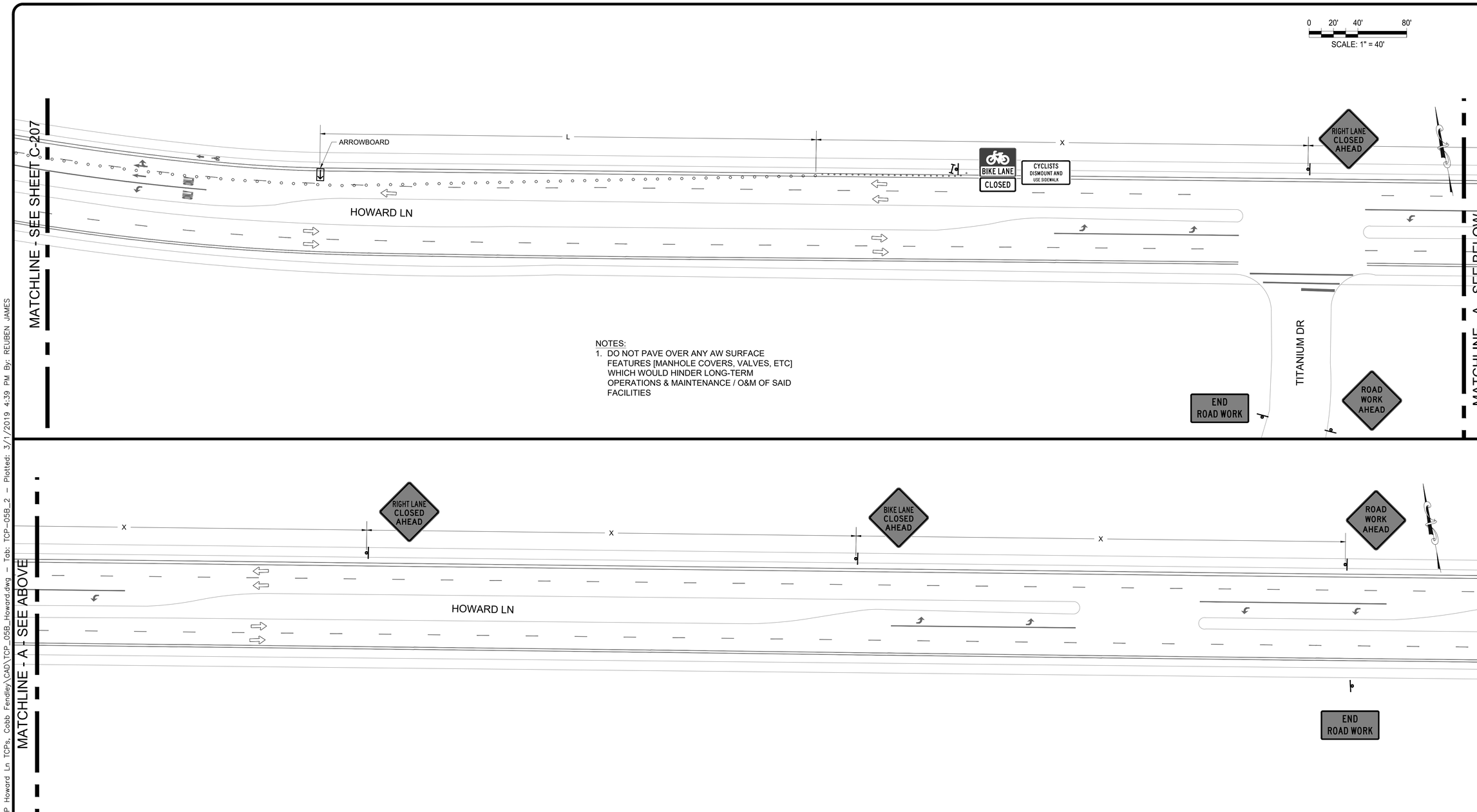

NOTES:

1. DO NOT PAVE OVER ANY AW SURFACE FEATURES [MANHOLE COVERS, VALVES, ETC] WHICH WOULD HINDER LONG-TERM OPERATIONS & MAINTENANCE / O&M OF SAID FACILITIES

LEGEND

- TRAFFIC FLOW
- SIGN POST
- FLAGGER
- CHANNELIZING DEVICES
- ARROWBOARD
- TYPE I BARRICADE
- TYPE III BARRICADE
- WORK AREA

REV. NO.	REVISION DESCRIPTION	APPROVED BY:	DATE

HVJ ASSOCIATES
1701 DIRECTOR'S BLVD
STE. 910
AUSTIN, TX 78744
(737) 222-5151
TEXAS FIRM NO. F-000646

TRAFFIC CONTROL PAVEMENT RESTORATION PHASE B SHEET 2 OF 2

HOWARD LANE WATER MAIN EXTENSION
AUSTIN, TX

PROJ. NO. AG1610160.5.1-P
DESIGN: RCJ
DRAWN: RCJ
CHECK: LLB
APPR: RCJ
DATE: 3/1/19

STATE OF TEXAS
REUBEN C. JAMES
107426
LICENSED
PROFESSIONAL ENGINEER
3/1/19

THESE DESIGN DOCUMENTS ARE NOT TO BE USED FOR CONSTRUCTION PRIOR TO REGULATORY SIGNATURE AND PERMIT.

SHEET
C-208

Dwg Info: P:\civil\Projects\2016\AG-16-10160.5.1-P Howard Ln TCPs, Cobb Fendley\CAD\TCP_05B_Howard.dwg - Tab: TCP-05B_2 - Plotted: 3/1/2019 4:39 PM By: REUBEN JAMES

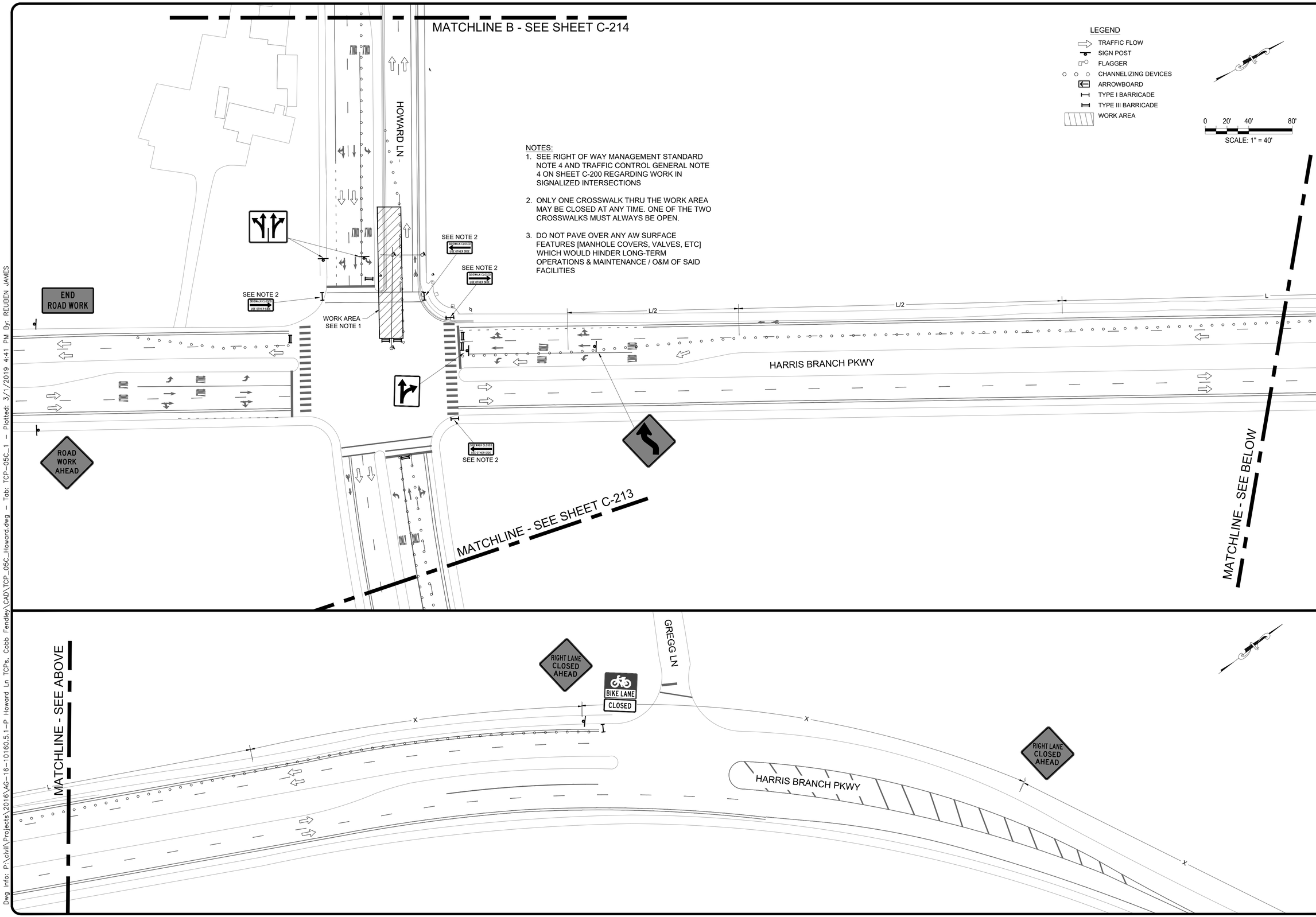

NOTES:

1. SEE RIGHT OF WAY MANAGEMENT STANDARD NOTE 4 AND TRAFFIC CONTROL GENERAL NOTE 4 ON SHEET C-200 REGARDING WORK IN SIGNALIZED INTERSECTIONS
2. ONLY ONE CROSSWALK THRU THE WORK AREA MAY BE CLOSED AT ANY TIME. ONE OF THE TWO CROSSWALKS MUST ALWAYS BE OPEN.
3. DO NOT PAVE OVER ANY AW SURFACE FEATURES [MANHOLE COVERS, VALVES, ETC] WHICH WOULD HINDER LONG-TERM OPERATIONS & MAINTENANCE / O&M OF SAID FACILITIES

REV. NO.	REVISION DESCRIPTION	APPROVED BY:	DATE

HVJ ASSOCIATES
1701 DIRECTOR'S BLVD
STE. 910
AUSTIN, TX 78744
(737) 222-5151
TEXAS FIRM NO. F-000646

TRAFFIC CONTROL PAVEMENT RESTORATION PHASE C

SHEET 1 OF 3

HOWARD LANE WATER MAIN EXTENSION
AUSTIN, TX

CITY OF AUSTIN
FOUNDED 1839

PROJ. NO. AG1610160.5.1-P
DESIGN: RCJ
DRAWN: RCJ
CHECK: LLB
APPR: RCJ
DATE: 3/1/19

STATE OF TEXAS
REUBEN C. JAMES
107426
LICENSED
PROFESSIONAL ENGINEER
3/1/19

THESE DESIGN DOCUMENTS ARE NOT TO BE USED FOR CONSTRUCTION PRIOR TO REGULATORY SIGNATURE AND PERMIT.

SHEET
C-209

Dwg Info: P:\civil\Projects\2016\AG-16-10160.5.1-P Howard Ln TCPs, Cobb Fendley\CAD\TCP_05C_Howard.dwg - Tab: TCP-05C_1 - Plotted: 3/1/2019 4:41 PM By: REUBEN JAMES

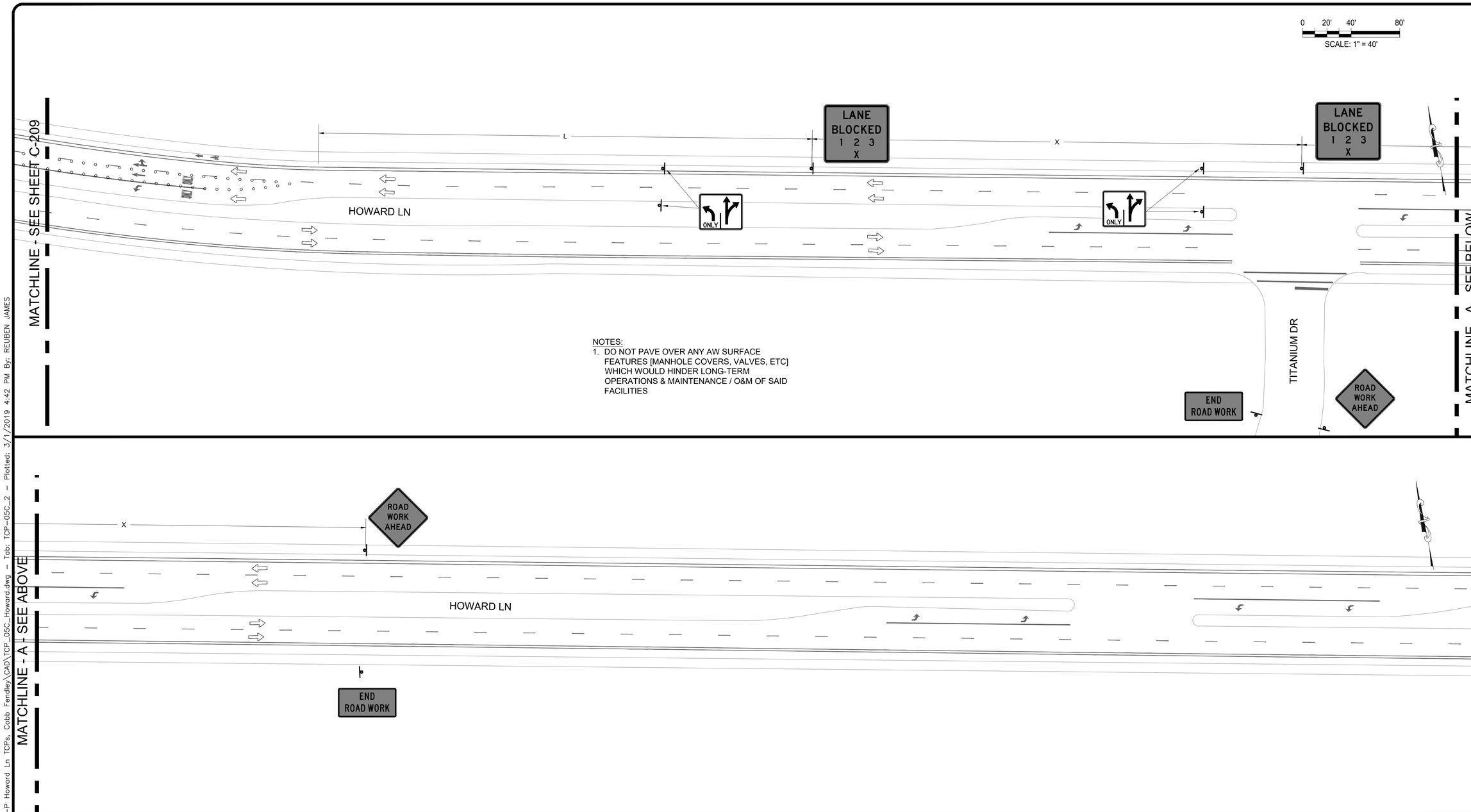

NOTES:
1. DO NOT PAVE OVER ANY AW SURFACE FEATURES [MANHOLE COVERS, VALVES, ETC] WHICH WOULD HINDER LONG-TERM OPERATIONS & MAINTENANCE / O&M OF SAID FACILITIES

LEGEND
- TRAFFIC FLOW
- SIGN POST
- FLAGGER
- CHANNELIZING DEVICES
- ARROWBOARD
- TYPE I BARRICADE
- TYPE III BARRICADE
- WORK AREA

REV. NO.	REVISION DESCRIPTION	APPROVED BY:	DATE

HVJ ASSOCIATES
1701 DIRECTOR'S BLVD
STE. 910
AUSTIN, TX 78744
(737) 222-5151
TEXAS FIRM NO. F-000646

TRAFFIC CONTROL PAVEMENT RESTORATION PHASE C
SHEET 2 OF 3

HOWARD LANE WATER MAIN EXTENSION
AUSTIN, TX

CITY OF AUSTIN
FOUNDED 1839

PROJ. NO. AG1610160.5.1-P
DESIGN: RCJ
DRAWN: RCJ
CHECK: LLB
APPR: RCJ
DATE: 3/1/19

STATE OF TEXAS
REUBEN C. JAMES
107426
LICENSED
PROFESSIONAL ENGINEER
3/1/19

THESE DESIGN DOCUMENTS ARE NOT TO BE USED FOR CONSTRUCTION PRIOR TO REGULATORY SIGNATURE AND PERMIT.

SHEET
C-210

Dwg Info: P:\civil\Projects\2016\AG-16-10160.5.1-P Howard Ln TCPs, Cobb Fendley\CAD\TCP_05C_Howard.dwg - Tab: TCP-05C_2 - Plotted: 3/1/2019 4:42 PM By: REUBEN JAMES

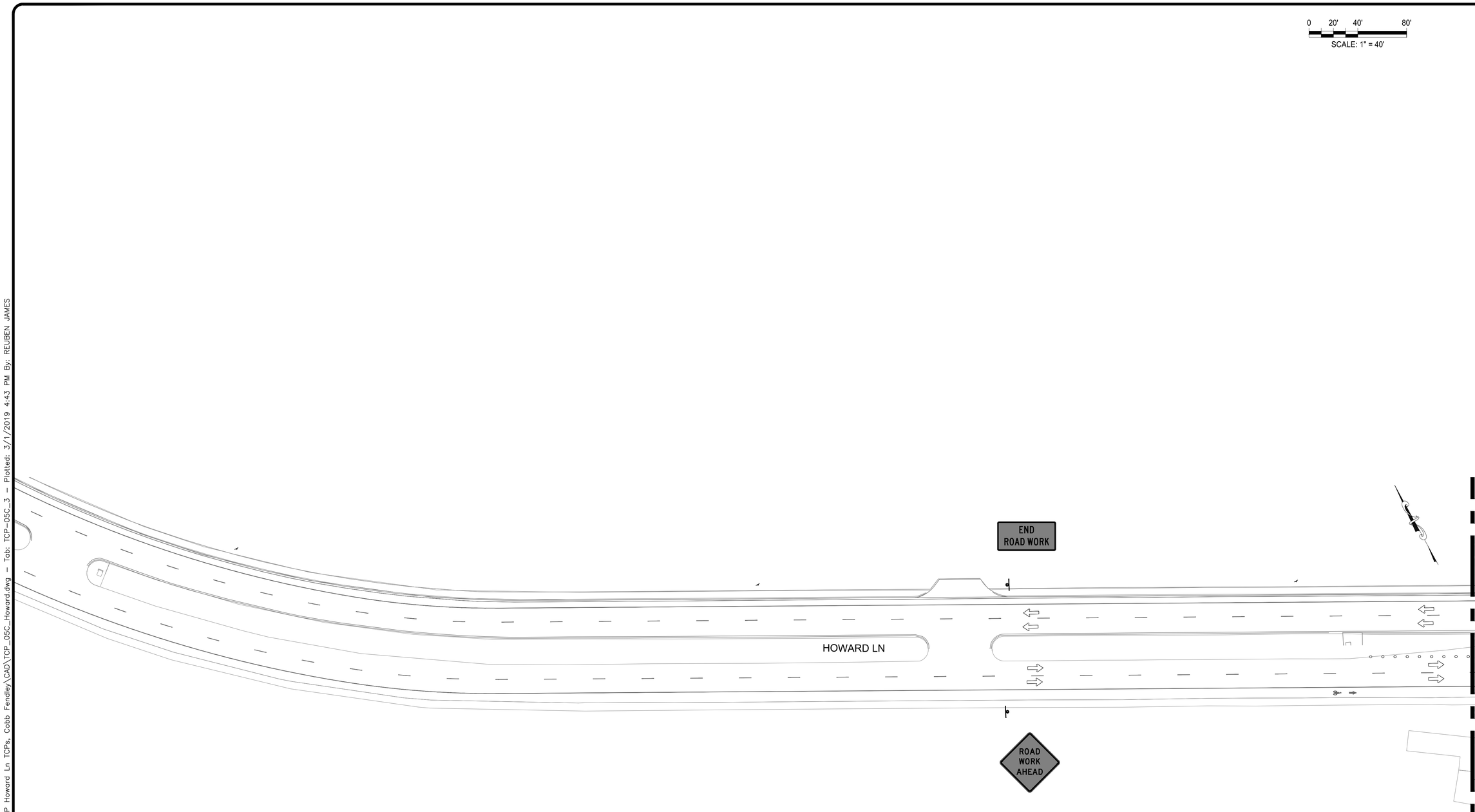

LEGEND

- TRAFFIC FLOW
- SIGN POST
- FLAGGER
- CHANNELIZING DEVICES
- ARROWBOARD
- TYPE I BARRICADE
- TYPE III BARRICADE
- WORK AREA

REV. NO.	REVISION DESCRIPTION	APPROVED BY:	DATE

HVJ ASSOCIATES
1701 DIRECTOR'S BLVD
STE. 910
AUSTIN, TX 78744
(737) 222-5151
TEXAS FIRM NO. F-000646

TRAFFIC CONTROL PAVEMENT RESTORATION PHASE C SHEET 3 OF 3

HOWARD LANE WATER MAIN EXTENSION
AUSTIN, TX

CITY OF AUSTIN
FOUNDED 1839

PROJ. NO. AG1610160.5.1-P
DESIGN: RCJ
DRAWN: RCJ
CHECK: LLB
APPR: RCJ
DATE: 3/1/19

STATE OF TEXAS
REUBEN C. JAMES
107426
LICENSED
PROFESSIONAL ENGINEER
3/1/19

THESE DESIGN DOCUMENTS ARE NOT TO BE USED FOR CONSTRUCTION PRIOR TO REGULATORY SIGNATURE AND PERMIT.

SHEET
C-211

Dwg Info: P:\civil\Projects\2016\AG-16-10160.5.1-P Howard Ln TCPs, Cobb Fendley\CAD\TCP_05C_Howard.dwg - Tab: TCP-05C_3 - Plotted: 3/1/2019 4:43 PM By: REUBEN JAMES

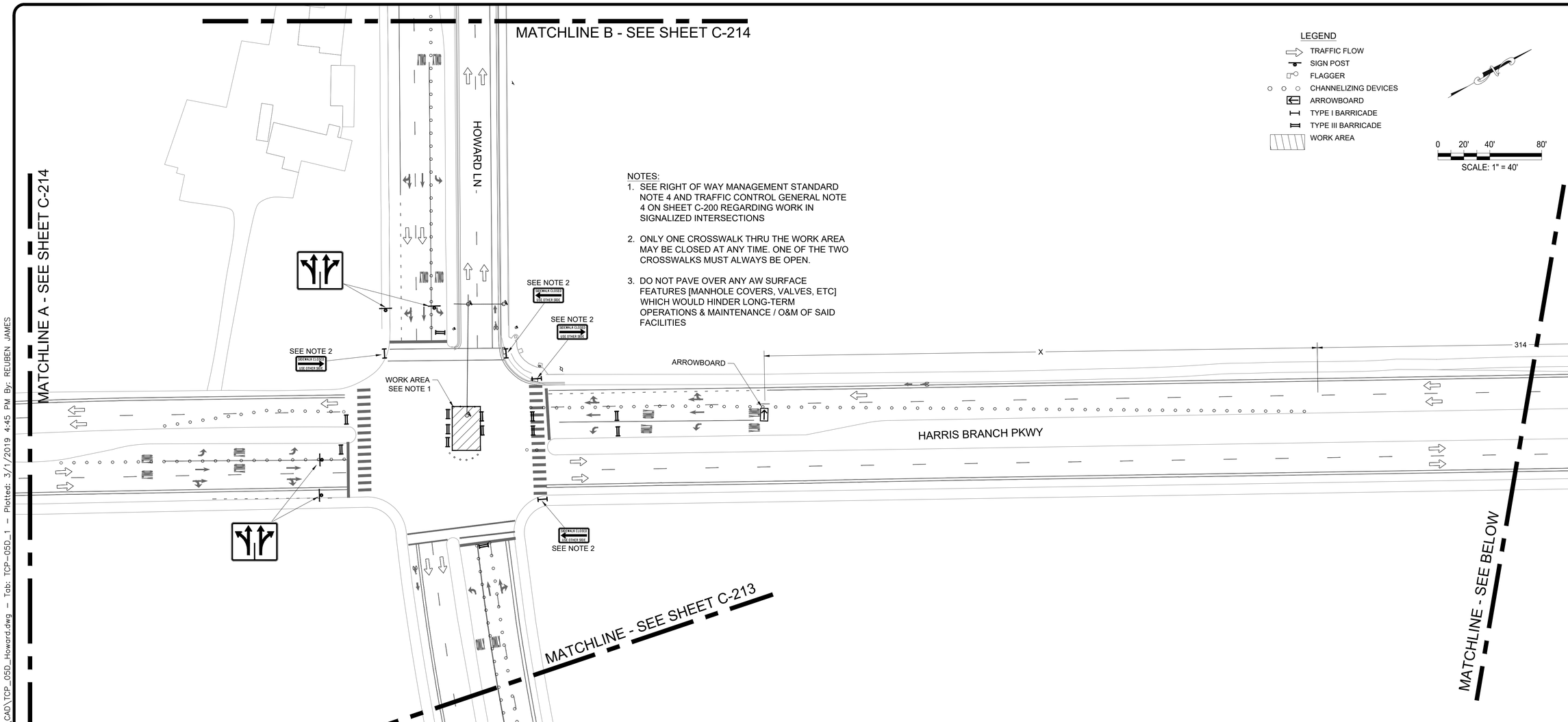

NOTES:

1. SEE RIGHT OF WAY MANAGEMENT STANDARD NOTE 4 AND TRAFFIC CONTROL GENERAL NOTE 4 ON SHEET C-200 REGARDING WORK IN SIGNALIZED INTERSECTIONS
2. ONLY ONE CROSSWALK THRU THE WORK AREA MAY BE CLOSED AT ANY TIME. ONE OF THE TWO CROSSWALKS MUST ALWAYS BE OPEN.
3. DO NOT PAVE OVER ANY AW SURFACE FEATURES [MANHOLE COVERS, VALVES, ETC] WHICH WOULD HINDER LONG-TERM OPERATIONS & MAINTENANCE / O&M OF SAID FACILITIES

LEGEND

- TRAFFIC FLOW
- SIGN POST
- FLAGGER
- CHANNELIZING DEVICES
- ARROWBOARD
- TYPE I BARRICADE
- TYPE III BARRICADE
- WORK AREA

0 20' 40' 80'

SCALE: 1" = 40'

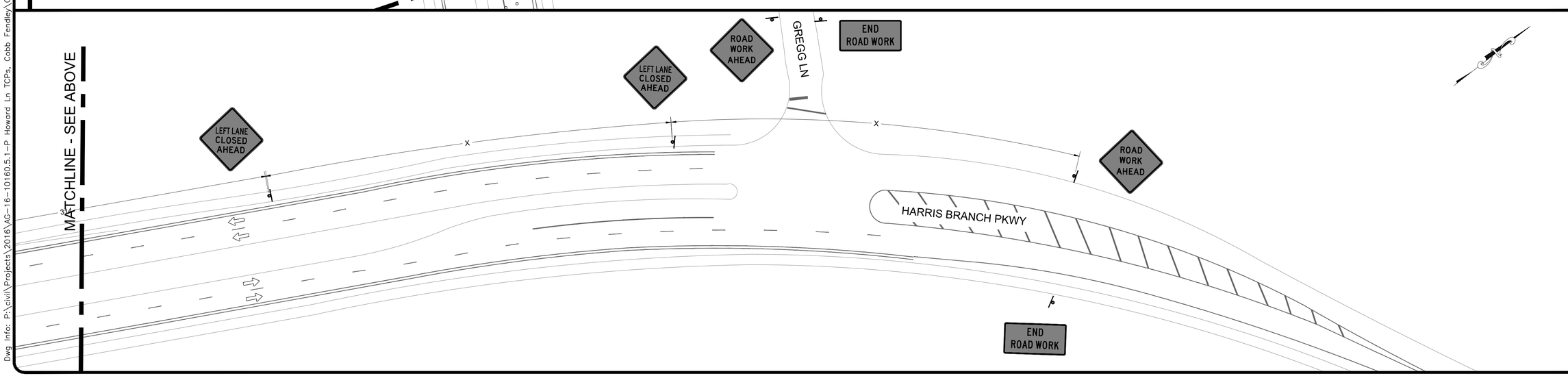

REV. NO.	REVISION DESCRIPTION	APPROVED BY:	DATE

HVJ ASSOCIATES
1701 DIRECTOR'S BLVD
STE. 910
AUSTIN, TX 78744
(737) 222-5151
TEXAS FIRM NO. F-000646

TRAFFIC CONTROL
PAVEMENT RESTORATION PHASE D
SHEET 1 OF 3

HOWARD LANE WATER MAIN EXTENSION
AUSTIN, TX

PROJ. NO. AG1610160.5.1-P
DESIGN: RCJ
DRAWN: RCJ
CHECK: LLB
APPR: RCJ
DATE: 3/1/19

STATE OF TEXAS
REUBEN C. JAMES
107426
LICENSED
PROFESSIONAL ENGINEER
3/1/19

THESE DESIGN DOCUMENTS ARE NOT TO BE USED FOR CONSTRUCTION PRIOR TO REGULATORY SIGNATURE AND PERMIT.

SHEET
C-212

Dwg Info: P:\civil\Projects\2016\AG-16-10160.5.1-P Howard Ln TCPs, Cobb Fendley\CAD\TCP_05D_Howard.dwg - Tab: TCP-05D_1 - Plotted: 3/1/2019 4:45 PM By: REUBEN JAMES

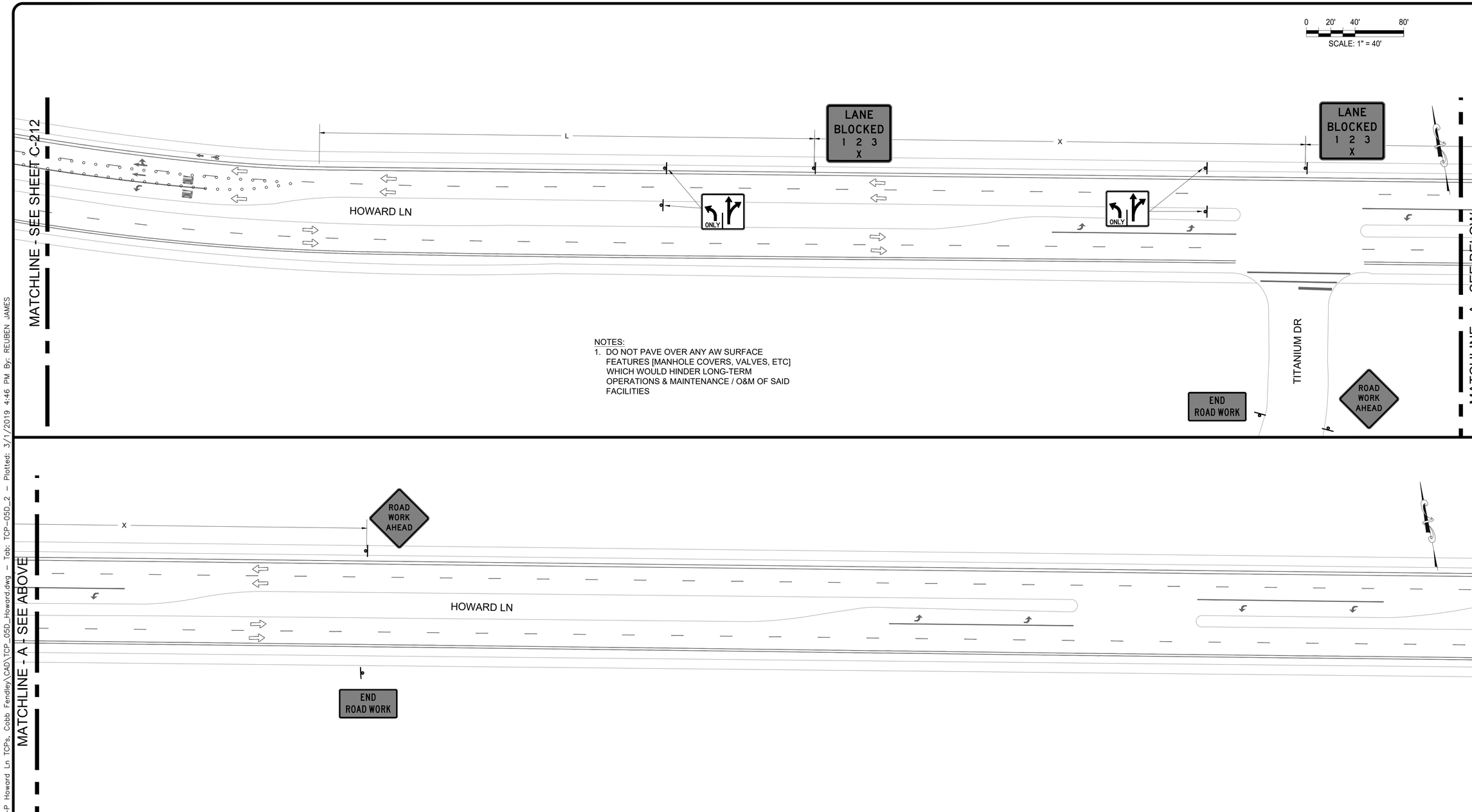

NOTES:
1. DO NOT PAVE OVER ANY AW SURFACE FEATURES [MANHOLE COVERS, VALVES, ETC] WHICH WOULD HINDER LONG-TERM OPERATIONS & MAINTENANCE / O&M OF SAID FACILITIES

LEGEND
- TRAFFIC FLOW
- SIGN POST
- FLAGGER
- CHANNELIZING DEVICES
- ARROWBOARD
- TYPE I BARRICADE
- TYPE III BARRICADE
- WORK AREA

REV. NO.	REVISION DESCRIPTION	APPROVED BY:	DATE

HVJ ASSOCIATES
1701 DIRECTOR'S BLVD
STE. 910
AUSTIN, TX 78744
(737) 222-5151
TEXAS FIRM NO. F-000646

TRAFFIC CONTROL PAVEMENT RESTORATION PHASE D
SHEET 2 OF 3

HOWARD LANE WATER MAIN EXTENSION
AUSTIN, TX

CITY OF AUSTIN
FOUNDED 1839

PROJ. NO. AG1610160.5.1-P
DESIGN: RCJ
DRAWN: RCJ
CHECK: LLB
APPR: RCJ
DATE: 3/1/19

STATE OF TEXAS
REUBEN C. JAMES
107426
LICENSED
PROFESSIONAL ENGINEER
3/1/19

THESE DESIGN DOCUMENTS ARE NOT TO BE USED FOR CONSTRUCTION PRIOR TO REGULATORY SIGNATURE AND PERMIT.

SHEET
C-213

Dwg Info: P:\civil\Projects\2016\AG-16-10160.5.1-P Howard Ln TCPs, Cobb Fendley\CAD\TCP_05D_Howard.dwg - Tab: TCP-05D_2 - Plotted: 3/1/2019 4:46 PM By: REUBEN JAMES

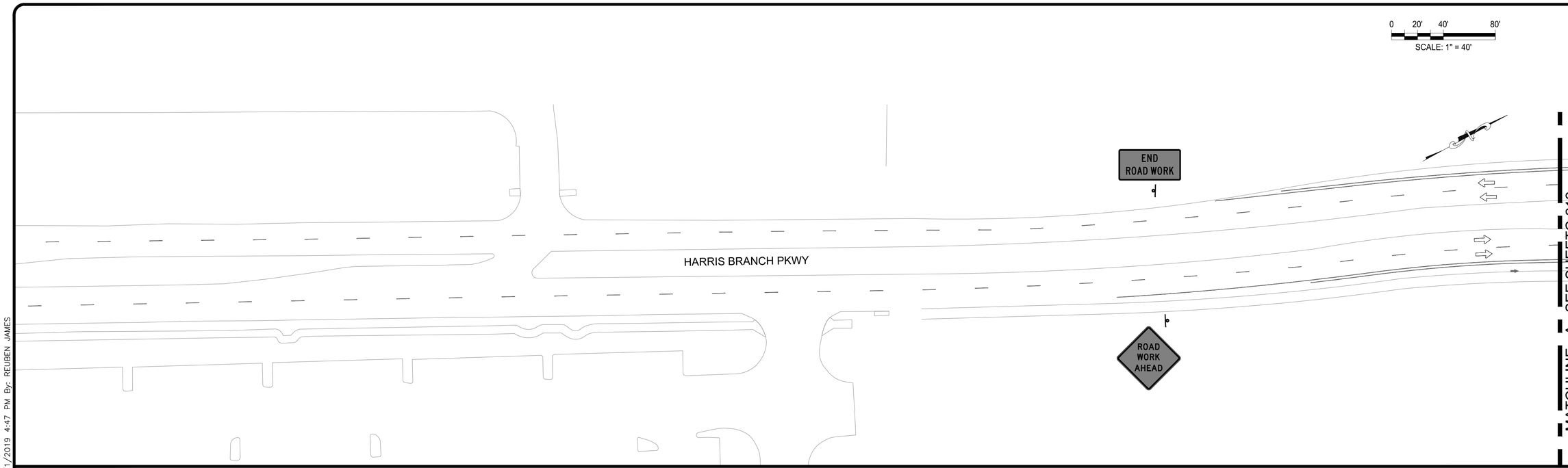

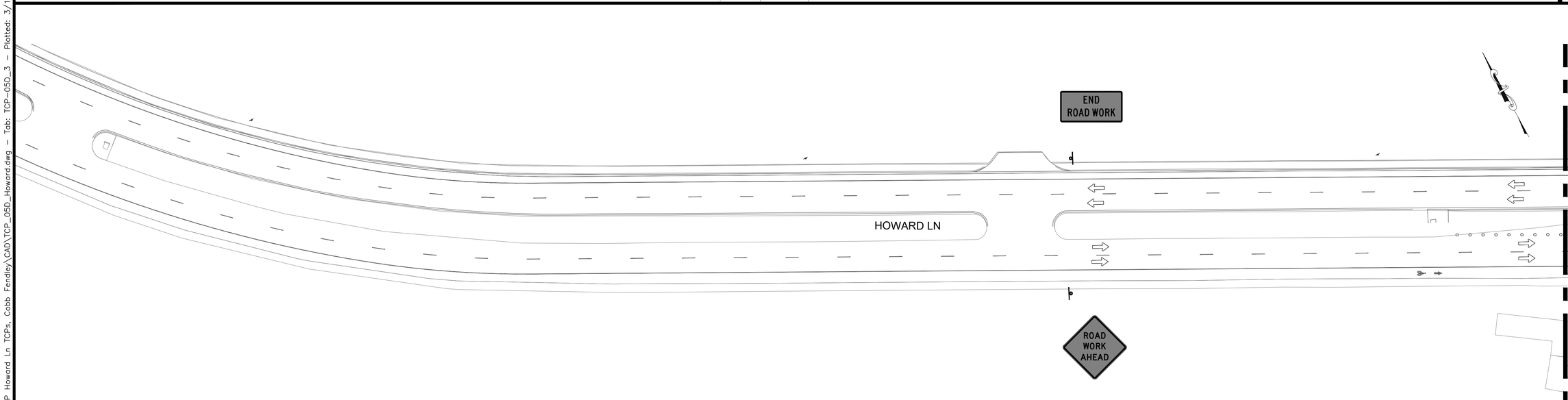

LEGEND

- TRAFFIC FLOW
- SIGN POST
- FLAGGER
- CHANNELIZING DEVICES
- ARROWBOARD
- TYPE I BARRICADE
- TYPE III BARRICADE
- WORK AREA

REV. NO.	REVISION DESCRIPTION	APPROVED BY:	DATE

HVJ ASSOCIATES
1701 DIRECTOR'S BLVD
STE. 910
AUSTIN, TX 78744
(737) 222-5151
TEXAS FIRM NO. F-000646

TRAFFIC CONTROL
PAVEMENT RESTORATION PHASE D
SHEET 3 OF 3

HOWARD LANE WATER MAIN EXTENSION
AUSTIN, TX

CITY OF AUSTIN
FOUNDED 1839

PROJ. NO. AG1610160.5.1-P
DESIGN: RCJ
DRAWN: RCJ
CHECK: LLB
APPR: RCJ
DATE: 3/1/19

STATE OF TEXAS
REUBEN C. JAMES
107426
LICENSED
PROFESSIONAL ENGINEER
3/1/19

THESE DESIGN DOCUMENTS ARE NOT TO BE USED FOR CONSTRUCTION PRIOR TO REGULATORY SIGNATURE AND PERMIT.

SHEET
C-214

Dwg Info: P:\civil\Projects\2016\AG-16-10160.5.1-P Howard Ln TCPs, Cobb Fendley\CAD\TCP_05D_Howard.dwg – Tab: TCP-05D_3 – Plotted: 3/1/2019 4:47 PM By: REUBEN JAMES

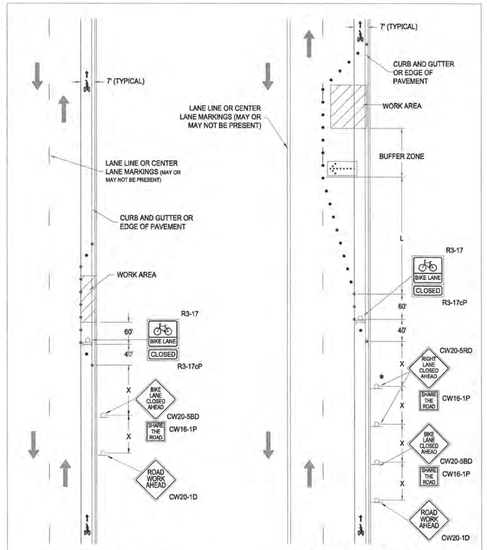

CITY OF AUSTIN
AUSTIN TRANSPORTATION DEPARTMENT, ROW MANAGEMENT DIVISION

BIKE LANE CLOSURE AND BIKE LANE CLOSURE WITH ADJACENT TRAVEL LANE; 35 MPH OR LESS

RECORD COPY SIGNED BY LEE AUSTIN 6/22/2016 ADOPTED

THE ARCHITECT/ENGINEER ASSUMES RESPONSIBILITY FOR APPROPRIATE USE OF THIS STANDARD.

STANDARD NO. 804S-1
10 OF 13

Notes for Standard 804S-1, 10 of 13

Bike Lane Closure and Bike Lane Closure with Adjacent Traffic Lane Closure; 35 mph or Less

Definitions:

Bicycle Lane: A portion of a roadway that has been designated by signs and pavement markings for preferential or exclusive use by bicycles.

Standard:

1. This standard detail shall apply on roadways with a posted speed of 35mph or less.

Guidance:

2. Bicycle lane transitions should be no less than 40 ft.

Standard:

3. A bike lane closure shall be used anytime work activity encroaches into a portion of or closes a bicycle lane on a roadway with a posted speed limit of 35 mph or less.

4. The adjacent traffic lane closure shall be used only on roadways where traffic flow is in multiple traffic lanes in the same direction.

5. Advance warning signs for a bicycle lane closure shall consist of a Road Work/Utility Work Ahead sign a Bike Lane Closed sign with a Share the Road (CW16-1P) sign. Additional signs shall be placed when the adjacent traffic lane is closed.

6. Vertical mounting height and lateral placement shall be as specified in 804S-5, 6 & 7 of 13.

7. Warning sign size shall be as shown for conventional roads in 804S-5, 6 & 7 of 13.

8. A type-I barricade shall be set at the end of the bike lane transition area to physically close the bike lane to prevent bicyclist's entry into the work zone.

9. A Bike Lane (R3-17) sign and a Closed (R3-17cP) plate shall be mounted directly behind the type-I Barricade in the bike lane.

Guidance:

10. Where work activity is expected to block a traffic lane of a roadway with a bicycle lane, a Bike Lane Closure should be set prior to the traffic lane closure.

CITY OF AUSTIN
AUSTIN TRANSPORTATION DEPARTMENT, ROW MANAGEMENT DIVISION

BIKE LANE CLOSURE 35 MPH OR LESS

Record Copy Signed by Lee Austin 6/22/2016 ADOPTED

THE ARCHITECT/ENGINEER ASSUMES RESPONSIBILITY FOR APPROPRIATE USE OF THIS STANDARD

STANDARD NO. 804S-1
10 of 13

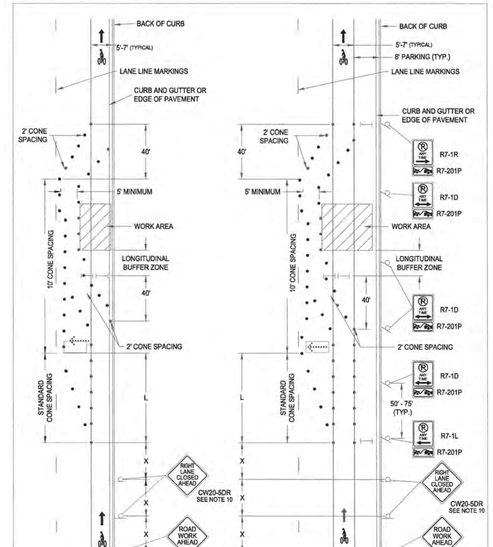

CITY OF AUSTIN
AUSTIN TRANSPORTATION DEPARTMENT, ROW MANAGEMENT DIVISION

BIKE LANE CHANNELIZING 40 MPH OR ABOVE

RECORD COPY SIGNED BY LEE AUSTIN 6/22/2016 ADOPTED

THE ARCHITECT/ENGINEER ASSUMES RESPONSIBILITY FOR APPROPRIATE USE OF THIS STANDARD.

STANDARD NO. 804S-1
11 OF 13

Notes for Standard 804S-1, 11 of 13

Bike Lane Channelizing 40 mph or Above

Definitions:

Bicycle Lane: A portion of a roadway that has been designated by signs and pavement markings for preferential or exclusive use by bicycles.

Standard:

1. A bike lane shall be channelized anytime work activity encroaches into a portion of, or blocks a bicycle lane on a one or two way multi-lane roadway with a posted speed limit greater than 35mph.

2. A channelized bike lane shall maintain a 5 foot minimum clear travel path for bicycle traffic.

3. Where the minimum 5 foot travel path cannot be achieved, other accommodations shall be developed for bicycle traffic.

Guidance:

4. Shared bicycle and vehicular traffic lanes should not be established on roadways with a posted speed limit above 35 mph.

Standard:

5. Where parking is not specifically prohibited, a No Parking/Tow Away zone shall be established. The "closed" No Parking/Tow Away zone shall begin at the first channelizing device on the approach, and end at the last channelizing device in the termination area. This No Parking/Tow Away zone shall utilize the symbolic version of the R7-1(P covered by a circle and slash) signs with appropriate arrows (see note 7) and R7-201P tow away plaques.

Guidance:

6. When used, a minimum of three (3) No Parking signs should be used to establish the no parking zone with a minimum spacing of 50 feet and maximum 75 feet spacing.

7. Since the parking restriction applies to a limited area, the limits of the restriction should be shown by arrows on the signs. At the end of the parking zone, a single headed arrow pointing in the direction of the restriction should be used. For intermediate signs, there should be a double headed arrow pointing both ways.

8. When No Parking/Tow Away signs are used to indicate the extent of the restricted parking zone, the signs should be set at an angle of not less than 30 degrees or more than 45 degrees with the line of traffic flow in order to be visible to approaching traffic.

9. When used, the no parking zone should be established 48 hours prior to the scheduled work and remain in place through the expected project duration.

Standard:

10. See 804S-1, 9 of 9 for traffic lane transition length L.

11. An additional Right Lane Closed Ahead (CW20-5DR) shall be used on roadways with posted speed limit above 35 mph.

12. Sign vertical mounting height and lateral placement shall be as specified in 804S-5, 6 & 7 of 13.

13. Warning sign size shall be as shown for conventional roads in 804S-5, 6 & 7 of 13.

14. A type-I barricade shall be set at the end of the bike lane transition area to physically close the bike lane to prevent bicyclist's entry into the work zone.

15. This traffic control detail shall not be used on Long-term stationary work that occupies a location more than 3 days.

CITY OF AUSTIN
AUSTIN TRANSPORTATION DEPARTMENT, ROW MANAGEMENT DIVISION

BIKE LANE CHANNELIZING 40 MPH OR ABOVE

Record Copy Signed by Lee Austin 6/22/2016 ADOPTED

THE ARCHITECT/ENGINEER ASSUMES RESPONSIBILITY FOR APPROPRIATE USE OF THIS STANDARD

STANDARD NO. 804S-1
11 of 13

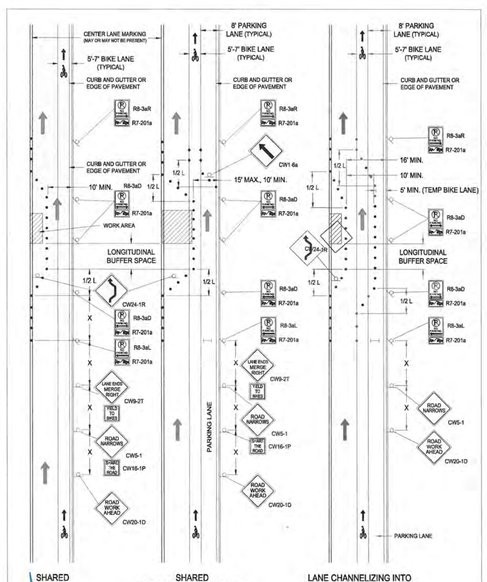

CITY OF AUSTIN
AUSTIN TRANSPORTATION DEPARTMENT, ROW MANAGEMENT DIVISION

TRAFFIC ENCROACHMENT INTO BIKE LANE; 35 MPH OR LESS

RECORD COPY SIGNED BY LEE AUSTIN 6/22/2016 ADOPTED

THE ARCHITECT/ENGINEER ASSUMES RESPONSIBILITY FOR APPROPRIATE USE OF THIS STANDARD.

STANDARD NO. 804S-1
12 OF 13

Notes for Standard 804S-1, 12 of 13

Traffic Encroachment into Bike Lane

Definitions:

Bicycle Lane: A portion of a roadway that has been designated by signs and pavement markings for preferential or exclusive use by bicycles.

Standard:

1. Where bike lanes exist on a roadway with a posted speed limit of 35 mph or less, and work or other activity will close the traffic lane, and traffic is redirected to travel in the bike lane, and adjacent parking lane, when a parking lane is present, a temporary shared traffic lane shall be established to maintain both vehicular and bicycle flow around the work or activity.

2. On roadways with a posted speed limit above 35 mph, alternative bicycle accommodations shall be developed.

3. Advance warning signs to establish temporary shared traffic lane shall consist of a Road Work/Utility Work Ahead sign a Road Narrows sign with a Share the Road (CW16-1P) plaque and a Lane Ends Merge Right (CW92T) sign with a Yield to Bikes plaque.

Guidance:

4. The Yield to Bikes plaque should have a white background and black legend and border.

Standard:

5. Where parking is not specifically prohibited, a No Parking/Tow Away zone shall be established. The "closed" No Parking/Tow Away zone shall begin at the first channelizing device on the approach, and end at the last channelizing device in the termination area. This No Parking/Tow Away zone shall utilize the symbolic version of the R7-1(P covered by a circle and slash) signs with appropriate arrows (see note 7) and R7-201P tow away plaques.

Guidance:

6. When used, a minimum of three (3) No Parking/Tow Away signs should be used to establish the no parking zone with a minimum spacing of 50 feet and maximum 75 feet spacing.

7. Since the parking restriction applies to a limited area, the limits of the restriction should be shown by arrows on the signs. At the end of the parking zone, a single headed arrow pointing in the direction of the restriction should be used. For intermediate signs, there should be a double headed arrow pointing both ways.

8. When No Parking/Tow Away signs are used to indicate the extent of the restricted parking zone, the signs should be set at an angle of not less than 30 degrees or more than 45 degrees with the line of traffic flow in order to be visible to approaching traffic.

9. When used, the no parking zone should be established 48 hours prior to the scheduled work and remain in place through the expected project duration.

Standard:

10. Sign vertical mounting height and lateral placement shall be as specified in 804S-5, 6 & 7 of 13.

11. Warning sign size shall be as shown for conventional roads in 804S-5, 6 & 7 of 13.

12. When a parking lane is adjacent to the bike lane and sufficient space is available (16 feet minimum), a separate traffic and bike lane shall be channelized around the work or activity area.

13. A channelized bike lane shall maintain a 5 foot minimum clear travel path for bicycle traffic.

14. A channelized traffic lane shall maintain a 10 foot minimum clear travel path for motor vehicle traffic.

15. This traffic control detail shall not be used on Long-term stationary work that occupies a location more than 3 days.

CITY OF AUSTIN
AUSTIN TRANSPORTATION DEPARTMENT, ROW MANAGEMENT DIVISION

TRAFFIC ENCROACHMENT INTO BIKE LANE; 35 MPH OR LESS

Record Copy Signed by Lee Austin 6/22/2016 ADOPTED

THE ARCHITECT/ENGINEER ASSUMES RESPONSIBILITY FOR APPROPRIATE USE OF THIS STANDARD

STANDARD NO. 804S-1
12 of 13

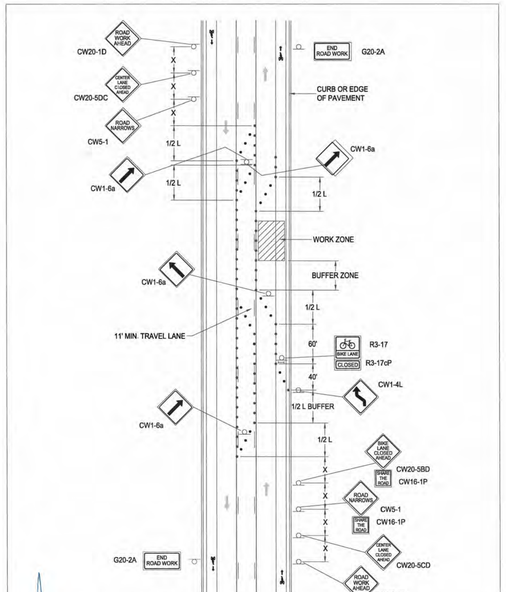

CITY OF AUSTIN
AUSTIN TRANSPORTATION DEPARTMENT, ROW MANAGEMENT DIVISION

SINGLE LANE CLOSURE ON A THREE LANE ROADWAY W/ BIKE LANES

RECORD COPY SIGNED BY LEE AUSTIN 6/22/2016 ADOPTED

THE ARCHITECT/ENGINEER ASSUMES RESPONSIBILITY FOR APPROPRIATE USE OF THIS STANDARD.

STANDARD NO. 804S-1
13 OF 13

Notes for Standard 804S-1, 13 of 13

Single Lane Closure On A Three Lane Roadway With Bike Lanes

Definitions:

Bicycle Lane: A portion of a roadway that has been designated by signs and pavement markings for preferential or exclusive use by bicycles.

Standard:

1. This standard detail shall apply on roadways with a posted speed of 35mph or less.

Guidance:

2. Bicycle lane transitions should be no less than 40 ft.

Standard:

3. A bike lane closure shall be used anytime work activity encroaches into a portion of or closes a bicycle lane on a roadway with a posted speed limit of 35 mph or less.

4. Where parking is not specifically prohibited, a No Parking/Tow Away zone shall be established. The "closed" No Parking/Tow Away zone shall begin at the first channelizing device on the approach, and end at the last channelizing device in the termination area. This No Parking/Tow Away zone shall utilize the symbolic version of the R7-1(P covered by a circle and slash) signs with appropriate arrows (see note 7) and R7-201P tow away plaques.

5. Advance warning signs for a bicycle lane closure shall consist of a Road Work/Utility Work Ahead sign, a Center Lane Closed Ahead sign, a Road Narrows sign with a Share the Road (CW16-1P) sign, and a Bike Lane Closed sign with a Share the Road (CW16-1P) sign.

6. Vertical mounting height and lateral placement shall be as specified in 804S-5, 6 & 7 of 13.

7. Warning sign size shall be as shown for conventional roads in 804S-5, 6 & 7 of 13.

8. A type-I barricade shall be set at the end of the bike lane transition area to physically close the bike lane to prevent bicyclist's entry into the work zone.

9. A Bike Lane (R3-17) sign and a Closed (R3-17cP) plate shall be mounted directly behind the type-I Barricade in the bike lane.

Guidance:

10. Where work activity is expected to block a traffic lane of a roadway with a bicycle lane, a Bike Lane Closure should be set prior to the traffic lane closure.

CITY OF AUSTIN
AUSTIN TRANSPORTATION DEPARTMENT, ROW MANAGEMENT DIVISION

SINGLE LANE CLOSURE ON A THREE LANE ROADWAY W/BIKE LANES

Record Copy Signed by Lee Austin 6/22/2016 ADOPTED

THE ARCHITECT/ENGINEER ASSUMES RESPONSIBILITY FOR APPROPRIATE USE OF THIS STANDARD

STANDARD NO. 804S-1
13 of 13

REV. NO.	REVISION DESCRIPTION	APPROVED BY:	DATE

HVJ ASSOCIATES
1701 DIRECTOR'S BLVD
STE. 910
AUSTIN, TX 78744
(737) 222-5151
TEXAS FIRM NO. F-000646

TRAFFIC CONTROL
CITY OF AUSTIN STANDARD DETAIL 804S-1

HOWARD LANE WATER MAIN EXTENSION
AUSTIN, TX

PROJ. NO. AG1610160.5.1-P
DESIGN: RCJ
DRAWN: RCJ
CHECK: LLB
APPR: RCJ
DATE: 3/1/19

STATE OF TEXAS
REUBEN C. JAMES
107426
LICENSED
PROFESSIONAL ENGINEER
3/1/19

THESE DESIGN DOCUMENTS ARE NOT TO BE USED FOR CONSTRUCTION PRIOR TO REGULATORY SIGNATURE AND PERMIT.

SHEET
C-215

Dwg Info: P:\civil\Projects\2016\AG-16-10160.5.1-P Howard Ln TCPs, Cobb Fendley\CAD\TCP_00_Howard.dwg - Tab: 804S-1 - Plotted: 3/1/2019 4:47 PM By: REUBEN JAMES

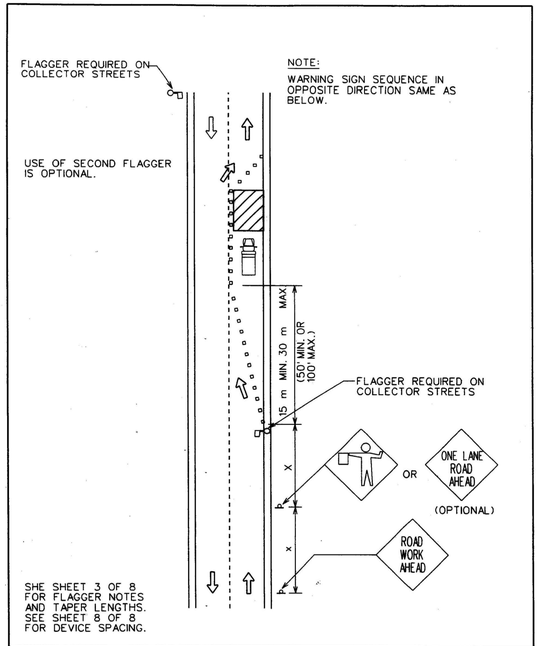

CITY OF AUSTIN DEPARTMENT OF PUBLIC WORKS	COLLECTOR / RESIDENTIAL STREET FLAGGING OPERATIONS	STANDARD NO.
Bill Gardner 3/13/06 ADOPTED	THE ARCHITECT/ENGINEER ASSUMES RESPONSIBILITY FOR APPROPRIATE USE OF THIS STANDARD.	804S-2 1 OF 8

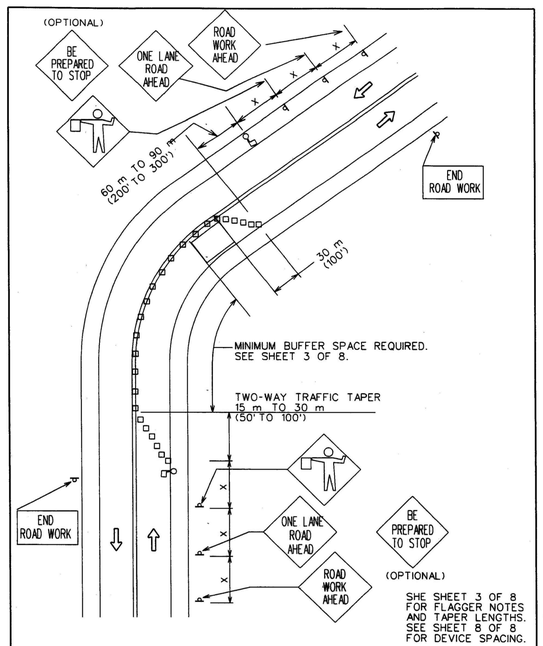

CITY OF AUSTIN DEPARTMENT OF PUBLIC WORKS	FLAGGER SETUP FOR 2 LANE ROADWAY	STANDARD NO.
Bill Gardner 3/13/06 ADOPTED	THE ARCHITECT/ENGINEER ASSUMES RESPONSIBILITY FOR APPROPRIATE USE OF THIS STANDARD.	804S-2 2 OF 8

1. FOR DAYTIME WORK, THE FLAGGER SHALL WEAR AN APPROVED BRIGHTLY COLORED VEST. FOR NIGHTTIME WORK, THE VEST SHALL BE RETROFLECTIVE. THE RETRO-REFLECTIVE MATERIAL SHALL BE ORANGE, YELLOW, WHITE, SILVER, STRONG YELLOW-GREEN OR A FLOURESCENT VERSION OF THESE COLORS AND SHALL BE VISIBLE AT A MINIMUM DISTANCE OF 305 m (1,000').
2. FOR LOW-VOLUME APPLICATIONS, A SINGLE FLAGGER MAY BE ADEQUATE. WHERE ONE FLAGGER CAN BE USED, SUCH AS FOR SHORT WORK AREAS ON STRAIGHT ROADWAYS, THE FLAGGER MUST BE VISIBLE TO APPROACHING TRAFFIC FROM BOTH DIRECTIONS.
3. FLAGGERS SHALL USE ONLY STOP/SLOW PADDLE TO DIRECT TRAFFIC UNLESS WORKING IN A SIGNALIZED INTERSECTION WHERE DRIVERS MAY BE CONFUSED BY THE SIGN PADDLE. HAND SIGNAL MAY BE USED IN THESE SITUATIONS.
4. FLAGGERS SHALL ENSURE THAT ALL REQUIRED SIGNING IS IN PLACE PRIOR TO BEGINNING FLAGGING OPERATIONS.
5. FLAGGERS SHALL NOT PERFORM WORK THAT IS NOT RELATED TO FLAGGING WHILE ON DUTY.
6. FLAGGERS MAY CARRY AIR HORNS OR WHISTLES TO WARN WORKERS OF AN EMERGENCY CONDITION.
7. FLAGGERS SHALL BE REQUIRED TO USE TWO-WAY RADIOS WHEN OUT OF CLEAR VIEW OF EACH OTHER.
8. FLOODLIGHTS SHOULD BE PROVIDED TO MARK FLAGGER STATIONS AT NIGHT AS NEEDED.

TAPER LENGTHS

SPEED (kmph)	SPEED* (mph)	LENGTH (meters)	LENGTH (feet)
30	20	11	35
40	25	17	55
50	30	26	85
55	35	36	120
65	40	51	170
70	45	66	220
80	50	84	280
90	55	101	335
95	60	125	415
105	65	146	485

*POSTED SPEED

CITY OF AUSTIN DEPARTMENT OF PUBLIC WORKS	FLAGGER SETUP FOR 2 LANE ROADWAY	STANDARD NO.
Bill Gardner 3/13/06 ADOPTED	THE ARCHITECT/ENGINEER ASSUMES RESPONSIBILITY FOR APPROPRIATE USE OF THIS STANDARD.	804S-2 3 OF 8

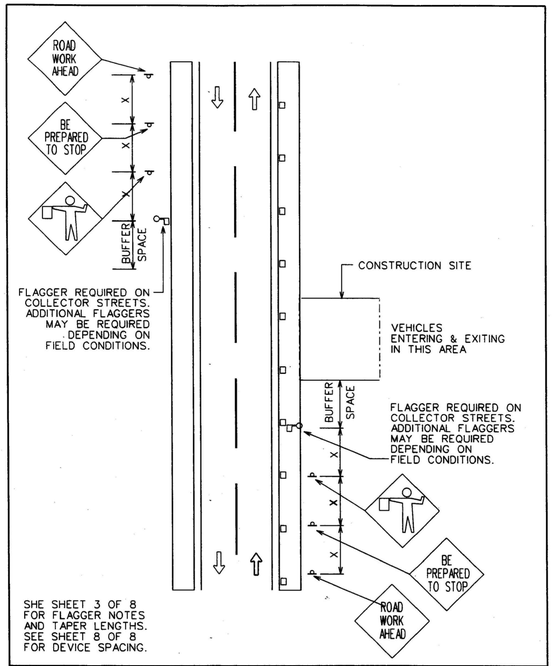

CITY OF AUSTIN DEPARTMENT OF PUBLIC WORKS	FLAGGER SETUP FOR VEHICLES ENTERING AND EXITING WORK SITE	STANDARD NO.
Bill Gardner 3/13/06 ADOPTED	THE ARCHITECT/ENGINEER ASSUMES RESPONSIBILITY FOR APPROPRIATE USE OF THIS STANDARD.	804S-2 4 OF 8

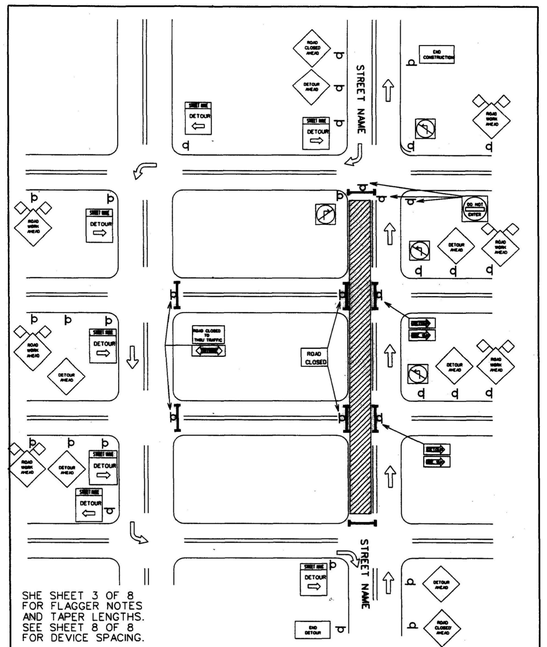

CITY OF AUSTIN DEPARTMENT OF PUBLIC WORKS	STREET DETOUR SINGLE DIRECTION	STANDARD NO.
Bill Gardner 3/13/06 ADOPTED	THE ARCHITECT/ENGINEER ASSUMES RESPONSIBILITY FOR APPROPRIATE USE OF THIS STANDARD.	804S-2 5 OF 8

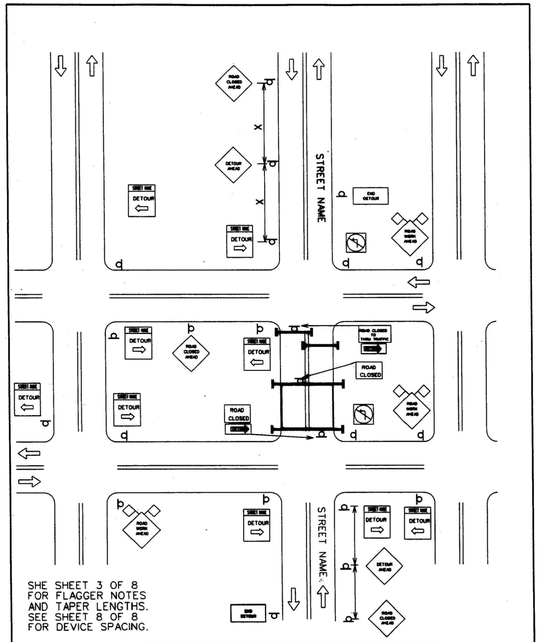

CITY OF AUSTIN DEPARTMENT OF PUBLIC WORKS	STREET DETOUR BOTH DIRECTIONS	STANDARD NO.
Bill Gardner 3/13/06 ADOPTED	THE ARCHITECT/ENGINEER ASSUMES RESPONSIBILITY FOR APPROPRIATE USE OF THIS STANDARD.	804S-2 6 OF 8

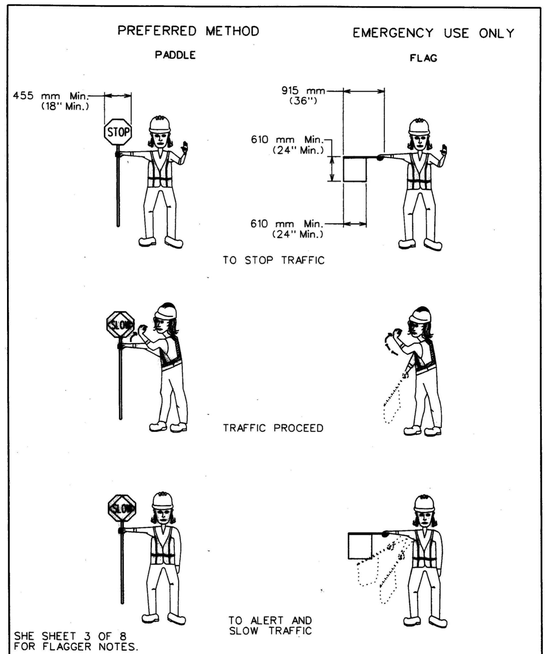

CITY OF AUSTIN DEPARTMENT OF PUBLIC WORKS	USE OF HAND SIGNALING DEVICES	STANDARD NO.
Bill Gardner 3/13/06 ADOPTED	THE ARCHITECT/ENGINEER ASSUMES RESPONSIBILITY FOR APPROPRIATE USE OF THIS STANDARD.	804S-2 7 OF 8

Typical Transition Lengths and Suggested Maximum Spacing of Devices

Speed KMPH	Posted Speed MPH	Formula	Minimum Desirable Taper Lengths (L) Meters (Feet) 3.0(10) Offset Meters (feet)	3.3(11) Offset Meters (feet)	3.6(12) Offset Meters (feet)	Suggested Max. Device Spacing On a taper Meters (feet)	On a tangent Meters (feet)	Suggested Sign Spacing Meters (Feet) "X" Dimension
50	30	$L=\frac{WS^2}{60}$	45 (150)	50 (165)	55 (180)	9 (30)	15-20 (60-75)	40 (120)
55	35		65 (205)	70 (225)	75 (245)	10 (35)	25-25 (70-90)	50 (160)
65	40		80 (265)	90 (295)	100 (320)	12 (40)	25-30 (80-100)	75 (240)
70	45	L=WS	135 (450)	150 (495)	165 (540)	13 (45)	25-30 (90-110)	100 (320)
80	50		150 (500)	165 (550)	180 (600)	15 (50)	30-35 (100-125)	120 (400)
90	55		165 (550)	185 (605)	200 (660)	16 (55)	35-40 (110-140)	150 (500)
95	60		180 (600)	200 (660)	220 (720)	18 (60)	40-45 (120-150)	180 (600)
105	65		195 (650)	215 (715)	235 (780)	19 (65)	40-50 (130-165)	210 (700)
115	70		215 (700)	235 (770)	255 (840)	21 (70)	45-55 (140-175)	240 (800)

LEGEND
- Channelizing devices
- Trailer mounted flashing arrow board
- Flagger

TRAFFIC DETOUR NOTES:

1. "STREET CLOSED" AND "STREET CLOSED TO THRU TRAFFIC" MAY BE USED IN PLACE OF "ROAD CLOSED" AND "ROAD CLOSED TO THRU TRAFFIC".
2. THE USE OF A STREET SIGN NAME NAME MOUNTED WITH THE M4-9 DETOUR SIGN** IS REQUIRED. THE STREET NAME PLATE SHOULD BE PLACED ABOVE THE DETOUR SIGN. THE PLATE MAY HAVE EITHER A WHITE-ON-GREEN OR A BLACK-ON-ORANGE LEGEND.
3. ADDITIONAL "DO NOT ENTER SIGNS" MAY BE DESIRABLE AT INTERSECTIONS WITH INTERVENING STREETS.
4. A M4-9 DETOUR SIGN** WITH AN ADVANCE TURN ARROW MAY BE USED IN ADVANCE OF A TURN. ON MULTI-LANE STREETS, SUCH SIGNS SHOULD BE USED.
5. M4-9 DETOUR SIGNS** MAY BE LOCATED ON THE FAR SIDE OF INTERSECTIONS.

** TEXAS MANUAL ON UNIFORM TRAFFIC CONTROL DEVICES

CITY OF AUSTIN DEPARTMENT OF PUBLIC WORKS	TYPICAL LENGTHS & SPACING OF DEVICES, LEGEND and GENERAL NOTES	STANDARD NO.
Bill Gardner 3/13/06 ADOPTED	THE ARCHITECT/ENGINEER ASSUMES RESPONSIBILITY FOR APPROPRIATE USE OF THIS STANDARD.	804S-2 8 OF 8

REV. NO.	REVISION DESCRIPTION	APPROVED BY:	DATE

HVJ ASSOCIATES
1701 DIRECTOR'S BLVD
STE. 910
AUSTIN, TX 78744
(737) 222-5151
TEXAS FIRM NO. F-000646

TRAFFIC CONTROL
CITY OF AUSTIN STANDARD DETAIL 804S-2

HOWARD LANE WATER MAIN EXTENSION
AUSTIN, TX

PROJ. NO. AG1610160.5.1-P
DESIGN: RCJ
DRAWN: RCJ
CHECK: LLB
APPR: RCJ
DATE: 3/1/19

STATE OF TEXAS
REUBEN C. JAMES
107426
LICENSED
PROFESSIONAL ENGINEER
3/1/19

THESE DESIGN DOCUMENTS ARE NOT TO BE USED FOR CONSTRUCTION PRIOR TO REGULATORY SIGNATURE AND PERMIT.

SHEET
C-216

Dwg Info: P:\civil\Projects\2016\AG-16-10160.5.1-P Howard Ln TCPs, Cobb Fendley\CAD\TCP_00_Howard.dwg - Tab: 804S-2 - Plotted: 3/1/2019 4:47 PM By: REUBEN JAMES

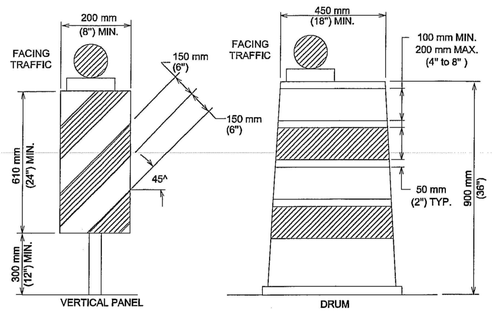

LONG TERM AND INTERMEDIATE TERM STATIONARY WORK

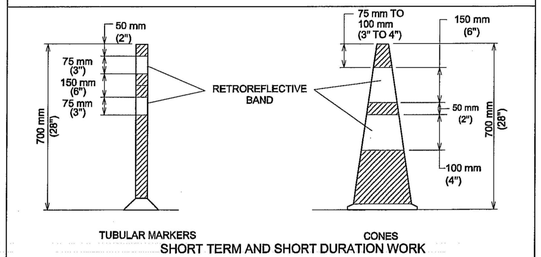

SHORT TERM AND SHORT DURATION WORK

SEE STANDARD 804S-5
SHEET 12 OF 13 AND SHEET 13 OF 13
FOR GENERAL NOTES AND DEVICE SPACING.

CITY OF AUSTIN
DEPARTMENT OF PUBLIC WORKS

1/4/10 ADOPTED

THE ARCHITECT/ENGINEER ASSUMES RESPONSIBILITY FOR APPROPRIATE USE OF THIS STANDARD.

CHANNELIZING DEVICES

STANDARD NO. 804S-5
1 OF 13

CHANNELIZING DEVICES

1. ALL CHANNELIZING DEVICES SHALL HAVE WARNING LIGHTS OR LARGE REFLECTORS WHEN USED AT NIGHT. FLASHING WARNING LIGHTS MAY BE PLACED ON CHANNELIZING DEVICES USED SINGULARLY OR IN GROUPS TO MARK A SPOT CONDITION. WARNING LIGHTS ON CHANNELIZING DEVICES USED IN A SERIES SHALL BE STEADY-BURN. CHANNELIZING DEVICES IN TAPERS AT NIGHT SHALL HAVE TYPE C WARNING LIGHTS.
2. THE RETROREFLECTIVE MATERIAL USED ON CHANNELIZING DEVICES SHALL HAVE A SMOOTH, SEALED OUTER SURFACE.
3. THE NAME AND TELEPHONE NUMBER OF THE AGENCY, CONTRACTOR OR SUPPLIER SHALL BE SHOWN ON THE NON-RETROREFLECTIVE SURFACE OF ALL CHANNELIZING DEVICES. THE LETTERS AND NUMBERS SHALL BE A NON-RETROREFLECTIVE COLOR AND NOT OVER 50 mm (2") IN HEIGHT.
4. PARTICULAR ATTENTION SHOULD BE GIVEN TO ASSURE THAT CHANNELIZING DEVICES ARE MAINTAINED AND KEPT CLEAN, VISIBLE AND PROPERLY POSTITIONED AT ALL TIMES. DEVICES SHALL BE REPLACED THAT ARE DAMAGED AND HAVE LOST A SIGNIFICANT AMOUNT OF THEIR RETROREFLECTIVITY AND EFFECTIVENESS.

CONES

CONES SHALL PREDOMINANTLY BE ORANGE, FLUORESCENT RED-ORANGE, OR FLUORESCENT YELLOW-ORANGE IN COLOR, NOT LESS THAN 70 mm (28") IN HEIGHT, AND SHALL BE MADE OF A MATERIAL THAT CAN BE STRUCK WITHOUT DAMAGING VEHICLES ON IMPACT. FOR NIGHT TIME USE, CONES SHALL BE RETROREFLECTIVE OR EQUIPPED WITH LIGHTING DEVICES FOR MAXIMUM VISIBILITY. RETROREFLECTION OF CONES SHALL BE PROVIDED BY A WHITE BOND 150 mm (6") WIDE, NO MORE THAN 75 TO 100 mm (3 TO 4") FROM THE TOP OF THE CONE, AND AN ADDITIONAL 100 mm (4") WHITE BAND A MINIMUM OF 50 mm (2") BELOW THE 150 mm (6") BAND. TRAFFIC CONES ARE NORMALLY USED FOR SHORT-TERM STATIONARY AND SHORT DURATION WORK. HOWEVER, CONES MAY BE USED FOR INTERMEDIATE-TERM STATIONARY WORK AT NIGHT, IF THE SITE IS CONTINUOUSLY MANNED.

TUBULAR MARKERS

TUBULAR MARKERS SHALL PREDOMINANTLY BE ORANGE IN COLOR, NOT LESS THAN 700 mm (28") IN HEIGHT . A MINIMUM 50 mm (2") WIDE WHEN FACING TRAFFIC AND MADE OF A MATERIAL THAT CAN BE STRUCK WITHOUT DAMAGING VEHICLES. FOR NIGHT TIME USE, TUBULAR MARKERS SHALL BE RETROREFLECTIVE PROVIDED BY TWO (2) 75 mm (3") WIDE WHITE BANDS PLACED A MAXIMUM OF 50 mm (2") FROM THE TOP, WITH A MAXIMUM OF 150 mm (6") BETWEEN BANDS. TUBULAR MARKERS ARE NORMALLY USED FOR SHORT-TERM STATIONARY AND SHORT DURATION WORK. HOWEVER, TUBULAR MARKERS MAY BE USED FOR INTERMEDIATE-TERM STATIONARY WORK AT NIGHT, IF THE SITE IS CONTINUOUSLY MANNED.

VERTICAL PANELS

VERTICAL PANELS SHALL BE 200 TO 300 mm (8 TO 12") WIDE AND AT LEAST 600 mm (24") IN HEIGHT. THEY SHALL HAVE ORANGE AND WHITE STRIPES, AND BE RETROREFLECTIVE. PANEL STRIPE WIDTHS SHALL BE 150 mm (6") EXCEPT WHERE PANEL HEIGHTS ARE LESS THAN 900 mm (36"), WHEN 100 mm (4") STRIPES MAY BE USED. IF USED FOR TWO-WAY TRAFFIC, BACK-TO-BACK PANELS SHALL BE USED.

DRUMS

1. DRUMS USED FOR TRAFFIC WARNING OR CHANNELIZATION SHALL BE CONSTRUCTED OF LIGHT-WEIGHT FLEXIBLE AND DEFORMABLE MATERIALS AND BE A MINIMUM OF 900 mm (36") IN HEIGHT, AND HAVE AT LEAST 450 mm (18") MINIMUM WIDTH, REGARDLESS OF OREINTATION. STEEL DRUMS SHALL NOT BE USED. THE MARKINGS ON DRUMS SHALL BE HORIZONTAL, CIRCUNFERENTIAL, ALTERNATING ORANGE AND WHITE RETROREFLECTIVE STRIPES 100 TO 200 mm (4 TO 8") WIDE. EACH DRUM SHALL HAVE A MINIMUM OF TWO (2) ORANGE AND TWO (2) WHITE STRIPES. ANY NON-RETROREFLECTIVE SPACES BETWEEN THE HORIZONTAL ORANGE AND WHITE STRIPES, SHALL NOT EXCEED 50 mm (2") WIDE. DRUMS SHALL HAVE CLOSED TOPS THAT WILL NOT ALLOW COLLECTION OF ROADWORK OR OTHER DEBRIS.

2. DRUMS SHOULD NOT BE WEIGHTED WITH SAND, WATER OR ANY MATERIAL TO AN EXTENT THAT WOULD MAKE THE HAZARDOUS TO MOTORISTS, PEDESTRIANS OR WORKERS. WHEN THEY ARE USED IN REGIONS SUSCEPTIBLE TO FREEZING, THEY SHOULD HAVE DRAINAGE HOLES IN THE BOTTOM SO WATER WILL NOT ACCUMULATE AND FREEZE,CAUSING A HAZARD IF STRUCK BY A MOTORIST. BALLAST SHALL NOT BE PLACED ON TOP OF THE DRUM.

CITY OF AUSTIN
DEPARTMENT OF PUBLIC WORKS

1/4/10 ADOPTED

THE ARCHITECT/ENGINEER ASSUMES RESPONSIBILITY FOR APPROPRIATE USE OF THIS STANDARD.

CHANNELIZING DEVICES

STANDARD NO. 804S-5
2 OF 13

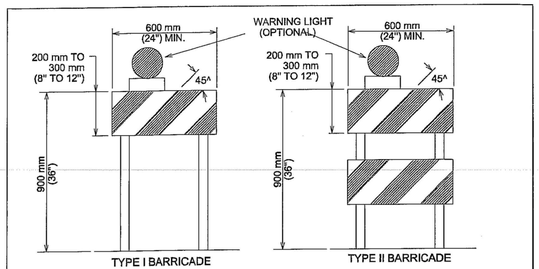

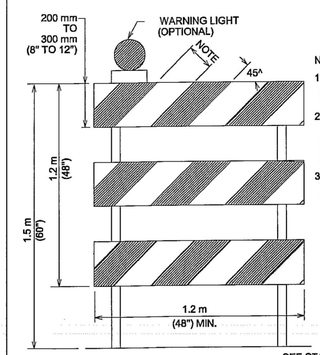

NOTES:

1. NOMINAL LUMBER DIMENSIONS ARE SATISFACTORY FOR BARRICADE RAIL WIDTH DIMENSIONS.
2. RAIL STRIPE WIDTHS SHALL BE 150 mm (6") EXCEPT WHERE RAIL LEGNTHS ARE LESS THAN 900 mm (36"), THEN 100 mm (4") WIDE STRIPES MAY BE USED.
3. THE SIDE OF BARRICADES FACING TRAFFIC SHALL HAVE RETRO-REFLECTIVE RAIL FACES.

SEE STANDARD 804S-5
SHEET 12 OF 13 AND SHEET 13 OF 13
FOR GENERAL NOTES AND DEVICE SPACING.

CITY OF AUSTIN
DEPARTMENT OF PUBLIC WORKS

1/4/10 ADOPTED

THE ARCHITECT/ENGINEER ASSUMES RESPONSIBILITY FOR APPROPRIATE USE OF THIS STANDARD.

BARRICADES

STANDARD NO. 804S-5
3 OF 13

BARRICADES

1. BARRICADES SHALL BE OF THREE TYPES: TYPE I, TYPE II OR TYPE III.
2. STRIPES ON BARRICADE RAILS SHALL BE ALTERNATING ORANGE AND WHITE RETRO-REFLECTIVE STRIPES (SLOPING DOWNWARD AT AN ANGLE OF 45 DEGREES IN THE DIRECTION TRAFFIC IS TO PASS). THE STRIPES SHALL BE 150 mm (6") WIDE, EXCEPT WHERE RAIL LENGTHS ARE LESS THAN 900 mm (36"), WHEN 100 mm (4") WIDE STRIPES MAY BE USED.
3. WHERE A BARRICADE EXTENDS ENTIRELY ACROSS A ROADWAY, THE SURFACE STRIPES SHOULD SLOPE DOWNWARD IN THE DIRECTION TOWARD WHICH TRAFFIC MUST TURN. WHERE BOTH RIGHT AND LEFT TURNS ARE PROVIDED, THE STRIPES MAY SLOPE DOWN-WARD IN BOTH DIRECTIONS FROM THE CENTER OF THE BARRICADE OR BARRICADES. WHERE NO TURNS ARE INTENDED, THE STRIPES SHOULD SLOPE DOWNWARD TOWARD THE CENTER OF THE BARRICADE OR BARRICADES.
4. BARRICADE RAILS SHOULD BE SUPPORTED IN A MANNER THAT WILL ALLOW THEM TO BE SEEN BY THE MOTORIST AND PROVIDE A STABLE SUPPORT NOT EASILY BLOWN OVER BY THE WIND OR TRAFFIC. FOR TYPE I BARRICADES, THE SUPPORT MAY INCLUDE OTHER UNSTRIPED HORIZONTAL PANELS NECESSARY TO PROVIDE STABILITY.
5. BARRICADES ARE LOCATED ADJACENT TO TRAFFIC AND ARE THEREFORE SUBJECT TO IMPACT WITH ERRANT VEHICLES. BECAUSE OF THEIR VULNERABLE POSITION AND THE HAZARD THEY COULD CREATE, THEY SHOULD BE CONSTRUCTED OF LIGHTWEIGHT MATERIALS AND HAVE NO RIGID STAY BRACING FOR A-FRAME DESIGNS. ALL BARRICADE SYSTEMS SHOULD BE CRASHWORTHY.
6. ON HIGH-SPEED EXPRESSWAYS OR IN OTHER SITUATION WHERE BARRICADES MAY BE SUSCEPTIBLE TO OVERTURING IN THE WIND, SANDBAGS SHOULD BE USED FOR BALLASTING. SANDBAGS MAY BE PLACED ON PARTS OF THE FRAME OR STAYS TO PROVIDE THE REQUIRED BALLAST BUT SHALL NOT BE PLACED ON TOP OF ANY STRIPED RAIL. BARRICADES SHALL NOT BE BALLASTED BY HEAVY OBJECTS SUCH AS ROCKS OR CHUNKS OF CONCRETE.

CITY OF AUSTIN
DEPARTMENT OF PUBLIC WORKS

1/4/10 ADOPTED

THE ARCHITECT/ENGINEER ASSUMES RESPONSIBILITY FOR APPROPRIATE USE OF THIS STANDARD.

BARRICADES

STANDARD NO. 804S-5
4 OF 13

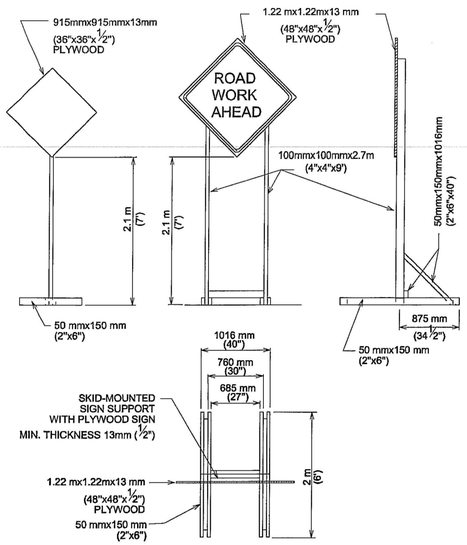

(LONG TERM AND INTERMEDIATE-TERM STATIONARY WORK)

TEMPORARY SIGN SUPPORT

SEE STANDARD 804S-5
SHEET 12 OF 13 AND SHEET 13 OF 13
FOR GENERAL NOTES AND DEVICE SPACING.

CITY OF AUSTIN
DEPARTMENT OF PUBLIC WORKS

1/4/10 ADOPTED

THE ARCHITECT/ENGINEER ASSUMES RESPONSIBILITY FOR APPROPRIATE USE OF THIS STANDARD.

TRAFFIC CONTROL SIGNS

STANDARD NO. 804S-5
5 OF 13

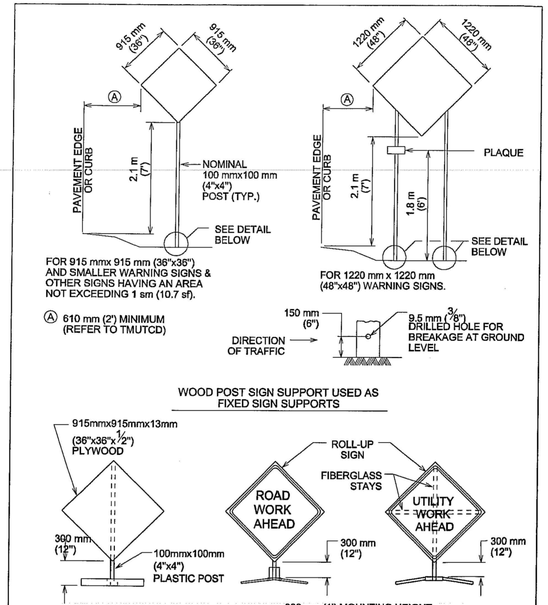

SEE STANDARD 804S-5
SHEET 12 OF 13 AND
SHEET 13 OF 13 FOR
GENERAL NOTES AND DEVICE SPACING.

CITY OF AUSTIN
DEPARTMENT OF PUBLIC WORKS

1/4/10 ADOPTED

THE ARCHITECT/ENGINEER ASSUMES RESPONSIBILITY FOR APPROPRIATE USE OF THIS STANDARD.

TRAFFIC CONTROL SIGNS

STANDARD NO. 804S-5
6 OF 13

1. WARNING SIGNS SHALL BE ORANGE, FLUORESCENT RED-ORANGE OR FLUORESCENT YELLOW-ORANGE IN COLOR. THE FLUORESCENT VERSIONS OF ORANGE PROVIDE HIGHER CONSPICUITY THAN STANDARD ORANGE, ESPECIALLY DURING TWILIGHT. ALL SIGNS USED AT NIGHT SHALL BE EITHER RETRORE-FLECTIVE, WITH A MATERIAL THAT HAS A SMOOTH, SEALED OUTER SURFACE, OR ILLUMINATED TO SHOW SIMILAR SHAPE AND COLOR BOTH DAY AND NIGHT. SIGN ILLUMINATION MAY BE EITHER IN-TERNAL OR EXTERNAL. ROADWAY LIGHTING DOES NOT MEET THE REQUIREMENTS FOR SIGN ILLUMINATION.
2. TYPE A FLASHING WARNING LIGHTS MAY BE USED IN CONJUNCTION WITH SIGNS AT NIGHT. STANDARD ORANGE FLAGS MAY BE USED FOR DAY TIME OPERATIONS. HOWEVER, NEITHER LIGHTS NOR FLAGS MAY BLOCK THE SIGN LEGEND.
3. SIGNS SHOULD BE LOCATED ON THE RIGHT-HAND SIDE OF THE ROADWAY. WHEN SPECIAL EMPHASIS IS NEEDED, SIGNS MAY BE PLACE ON BOTH THE LEFT AND RIGHT SIDES OF ROADWAY. SIGNS SHALL BE PLACED ON BOTH THE LEFT AND RIGHT SIDES OF ONE-WAY OR DIVIDED ROADWAYS. SIGNS USED FOR LONG-TERM STATIONARY AND INTERMEDIATE-TERM STATIONARY WORK SHALL BE MOUNTED AT A HEIGHT OF AT LEAST 2.1 m (7'), MEASURED FROM THE BOTTOM OF THE SIGN. THE HEIGHT TO THE BOTTOM OF A SECONDARY SIGN MOUNTED BELOW ANOTHER SIGN MAY BE 0.3 m (1') LESS THAN THE APPROPRIATE HEIGHT ABOVE.
4. SIGNS MAY BE MOUNTED ON PORTABLE SUPPORTS FOR SHORT-TERM, SHORT DURATION, MOBILE CON-DITIONS AND EMERGENCIES. SIGNS MOUNTED ON PORTABLE SUPPORTS SHALL BE AT A HEIGHT OF AT LEAST 0.3 m (1'), MEASURED FROM THE BOTTOM OF THE SIGN.
5. ALL SIGN SYSTEMS SHOULD BE CRASHWORTHY. NO SIGN MOUNTS SHALL BLOCK OR IMPEDE SIDEALKS UNLESS NO OTHER OPTION IS AVAILABLE. ONLY SANDBAGS SHOULD BE USED FOR BALLASTING SIGN MOUNTS.

TABLE VI-3 TYPICAL CONSTRUCTION WARNING SIGN SIZE AND SPACING

Roadway Classification	Posted Speed	Sign Spacing ☆	Long-term Stationary Or Intermediate-term Stationary Approaching Warning Signs CW20 Series And CW22-1 Sign		Short-term Stationary Or Short Duration Approach Warning Signs CW22 Series		Other Warning Signs
			Standard	Minimum[4]	Standard	Minimum[4]	Standard
Conven.	KPH (MPH)	meter (feet)	mm (inches)	mm (inches)	mm (inches)	mm (inches)	mm (inches)
	50 (30)	40 (120)	1220x1220 (48x48)	915x915 (36x36)			
	55 (35)	50 (160)		↓	915x915 (36x36)		915x915 (36x36)
	65 (40)	75 (240)			↓		↓
	70 (45)	100 (320)		Use Standard Size		Use Standard Size	
	80 (50)	120 (400)				↓	
	90 (55)	150 (500) 2					
	100 (60)	180 (600) 2			1220x1220 (48x48)		1220x1220 (48x48)
	105 (65)	210 (700) 2			↓		↓
	115 (70)	240 (800) 2					
Exp. or Fwy	☆☆	☆☆ 3	↓	↓	☆☆☆	☆☆☆	☆☆☆

☆ MINIMUM DISTANCE FROM WORK TO 1st ADVANCE WARNING SIGN AND/OR DISTANCE BETWEEN EACH ADDITIONAL SIGN.
☆☆ FOR TYPICAL SIGN SPACINGS ON EXPRESSWAYS AND FREEWAYS, REFER TO THE CURRENT ADDITION OF TMUTCD.
☆☆☆ SMALLER SIGN SIZES MAY BE USED WHERE SIGN DESIGNS HAVE NOT BEEN INCLUDED IN THE "STANDARD HIGHWAY SIGNS DESIGN MANUAL".

1. SPECIAL OR LARGER SIZE SIGNS MAY BE USED AS NECESSARY.
2. DISTANCE BETWEEN SIGNS SHOULD BE INCREASED AS REQUIRED TO HAVE 450 m (1500') OR MORE ADVANCE WARNING.
3. DISTANCE BETWEEN SIGNS SHOULD BE INCREASED AS REQUIRED TO HAVE A 0.8 km (1/2 MILE) OR MORE ADVANCE WARNING.
4. FOR USE ONLY ON SECONDARY ROADS OR CITY STREETS WHERE SPEEDS ARE LOW.

CITY OF AUSTIN
DEPARTMENT OF PUBLIC WORKS

1/4/10 ADOPTED

THE ARCHITECT/ENGINEER ASSUMES RESPONSIBILITY FOR APPROPRIATE USE OF THIS STANDARD.

TRAFFIC CONTROL SIGNS

STANDARD NO. 804S-5
7 OF 13

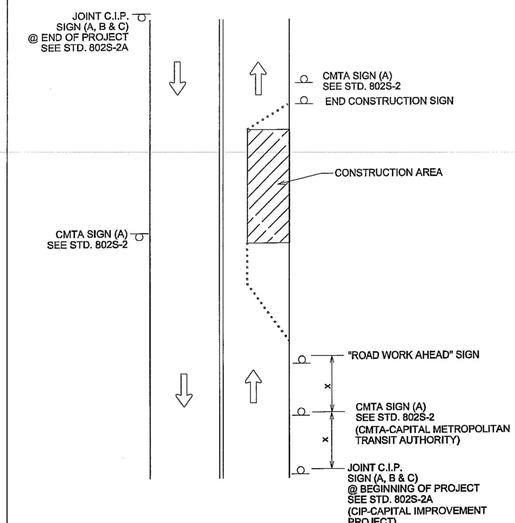

NOTES:

1. OTHER REQUIRED SIGNS NOT SHOWN FOR CLARITY.
2. "X" DISTANCES SAME AS STANDARD TABLE SHOWN ON SHEET 13 OF 13.

SEE STANDARD 804S-5
SHEET 12 OF 13 AND SHEET 13 OF 13
FOR GENERAL NOTES AND DEVICE SPACING.

CITY OF AUSTIN
DEPARTMENT OF PUBLIC WORKS

1/4/10 ADOPTED

THE ARCHITECT/ENGINEER ASSUMES RESPONSIBILITY FOR APPROPRIATE USE OF THIS STANDARD.

TYPICAL CMTA/C.I.P. SIGN LOCATIONS

STANDARD NO. 804S-5
8 OF 13

REV. NO.	REVISION DESCRIPTION	APPROVED BY:	DATE

HVJ ASSOCIATES
1701 DIRECTOR'S BLVD
STE. 910
AUSTIN, TX 78744
(737) 222-5151
TEXAS FIRM NO. F-000646

TRAFFIC CONTROL
CITY OF AUSTIN STANDARD DETAIL 804S-5
1 OF 2

HOWARD LANE WATER MAIN EXTENSION
AUSTIN, TX

PROJ. NO. AG1610160.5.1-P
DESIGN: RCJ
DRAWN: RCJ
CHECK: LLB
APPR: RCJ
DATE: 3/1/19

STATE OF TEXAS
REUBEN C. JAMES
107426
LICENSED PROFESSIONAL ENGINEER
3/1/19

THESE DESIGN DOCUMENTS ARE NOT TO BE USED FOR CONSTRUCTION PRIOR TO REGULATORY SIGNATURE AND PERMIT.

SHEET
C-217

Dwg Info: P:\civil\Projects\2016\AG-16-10160.5.1-P Howard Ln TCPs, Cobb Fendley\CAD\TCP_00_Howard.dwg - Tab: 804S-5 - Plotted: 3/1/2019 4:47 PM By: REUBEN JAMES

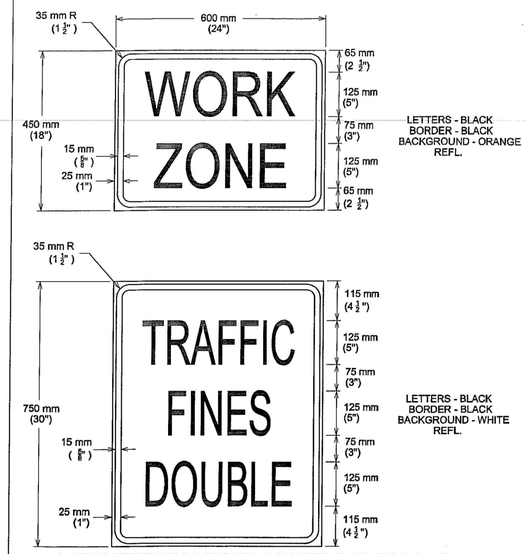

SEE STANDARD DETAIL 804S-5
SHEET 5 OF 13 FOR SKID-
MOUNTED SIGN SUPPORT.

CITY OF AUSTIN DEPARTMENT OF PUBLIC WORKS	SPECIAL WORK ZONE SIGNS	
1/4/10 ADOPTED	THE ARCHITECT/ENGINEER ASSUMES RESPONSIBILITY FOR APPROPRIATE USE OF THIS STANDARD.	STANDARD NO. 804S-5 9 OF 13

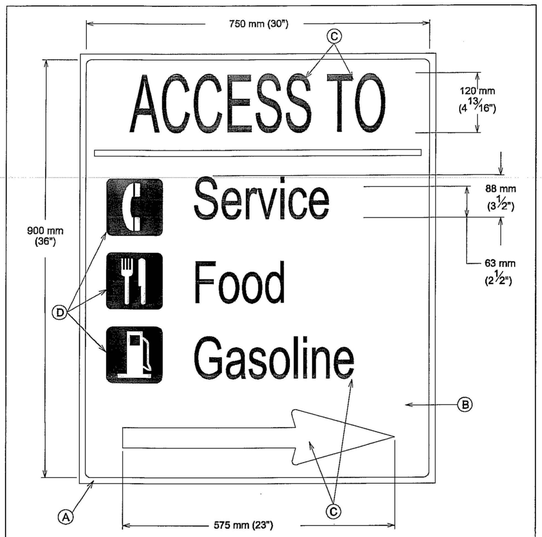

(A) 50 mm (1/2") WHITE RETROREFLECTIVE BORDER
(B) BLUE RETROFEFLECTIVE BACKGROUND
(C) WHITE RETROREFLECTIVE ARROW AND LETTERS
(D) WHITE RETROREFELCTIVE BUSINESS LOGO

NOTES:
1. CONTRACTORS CAN MAKE BUSINESS NAMES REMOVABLE/CHANGEABLE AS AN OPTION.
2. BUSINESS LOGO ARE OPTIONAL. IF USED LETTERING MUST BE MINIMIZED.

CITY OF AUSTIN DEPARTMENT OF PUBLIC WORKS	SPECIAL WORK ZONE SIGNS	
1/4/10 ADOPTED	THE ARCHITECT/ENGINEER ASSUMES RESPONSIBILITY FOR APPROPRIATE USE OF THIS STANDARD.	STANDARD NO. 804S-5 10 OF 13

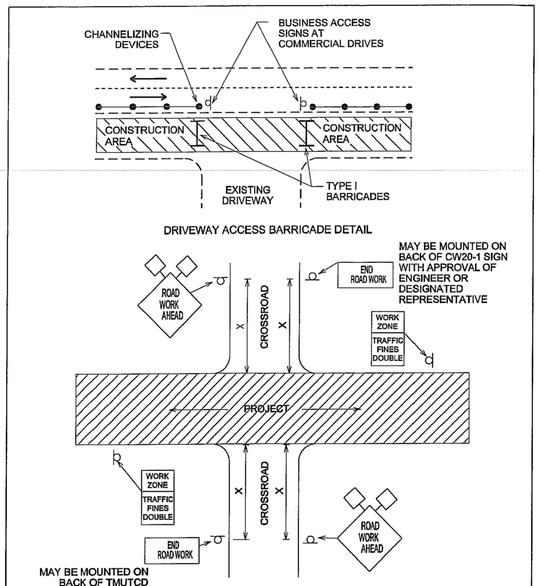

SEE STANDARD 804S-5
SHEET 12 OF 13 AND SHEET 13 OF 13
FOR GENERAL NOTES AND DEVICE SPACING.

CITY OF AUSTIN DEPARTMENT OF PUBLIC WORKS	SIGNING AND BARRICADING CROSSROAD & DRIVEWAY	
1/4/10 ADOPTED	THE ARCHITECT/ENGINEER ASSUMES RESPONSIBILITY FOR APPROPRIATE USE OF THIS STANDARD.	STANDARD NO. 804S-5 11 OF 13

1. ALL TRAFFIC CONTROL DEVICES, SIGNS, BARRICADES AND WARNING SIGNS SHALL BE FURNISHED, PLACED, CONSTRUCTED AND MAINTAINED IN THE APPROPRIATE TYPES AND SIZES AND FLAGGER OPERATIONS EXECUTED IN ACCORDANCE WITH THE CURRENT EDITION OF THE TEXAS MANUAL ON UNIFORM CONTROL DEVICES (TMUTCD), THE CITY OF AUSTIN STANDARD SPECIFICATIONS SERIES 800 AND THE CITY OF AUSTIN TRANSPORTATION CRITERIA MANUAL, OR AS DIRECTED BY THE ENGINEER OR DESIGNATED REPRESENTATIVE. IF A CONFLICT ARISES THEN THE CITY OF AUSTIN TRANSPORTATION CRITERIA MANUAL SHALL CONTROL UNLESS OTHERWISE INSTRUCTED BY THE ENGINEER OR DESIGNATED REPRESENTATIVE.
2. THE CONTRACTOR SHALL NOTIFY THE TRANSPORTATION DIVISION OF THE DEPARTMENT OF PUBLIC WORKS AT 974-7024 NO LATER THAN THE MONDAY OF THE WEEK DURING WHICH THE CONTRACTOR INTENDS TO SET UP BARRICADES TO START CONSTRUCTION.
3. PROPOSED CONSTRUCTION TRAFFIC MOVEMENTS MAY REQUIRE EXISTING SIGNAL HEADS TO BE RELOCATED. THE CITY OF AUSTIN WILL REVIEW SIGNAL HEAD LOCATIONS DURING CONSTRUCTION AND PERFORM THE REQUIRED ADJUSTMENTS. THE CONTRACTOR SHALL CONTACT THE TRANSPORTATION DIVISION OF THE DEPARTMENT OF PUBLIC WORKS AT 974-7024, THREE (3) DAYS PRIOR TO PLACMENT ANY TRAFFIC CONTROLS WHICH MAY REQUIRE SIGNAL HEAD ADJUSTMENTS/RELOCATION.
4. THE CONTRACTOR SHALL PROVIDE ONE (1) FULL-TIME OFF-DUTY, UNIFORMED AUSTIN POLICE DEPARTMENT CERTIFIED PEACE OFFICER AND ONE (1) VEHICLE OF THE TYPE APPROVED BY THE ENGINEER OR DESIGNATED REPRESENTATIVE FOR TEMPORARY LANE CLOSURES WHEN UNDERSEALING, MILLING, PAVING AND WHEN WORKING IN INTERSECTIONS AS PART OF THE TRAFFIC CONTROL OPERATIONS. THE PEACE OFFICER SHALL BE ABLE TO SHOW PROOF OF CERTIFICATION BY THE TEXAS COMMISSION ON LAW ENFORCEMENT OFFICER STANDARDS.
5. THE CONTRACTOR SHALL NOTIFY ALL OTHER GOVERNMENTAL AGENCIES WHOSE RIGHTS-OF-WAY ARE AFFECTED BY HIS WORK ACTIVITIES. THE CONTRACTOR SHALL PROVIDE ANY ADDITIONAL TRAFFIC CONTROL DEVICES THAT THEY MAY NEED.
6. THE CONTRACTOR SHALL MAINTAIN ONE (1) DUST-FREE LANE OF TRAFFIC IN EACH DIRECTION AT ALL TIMES, UNLESS OTHERWISE NOTED IN THE DRAWINGS OR APPROVED THE ENGINEER OR DESIGNATED REPRESENTATIVE.
7. THERE SHALL BE A MINIMUM OF THREE (3) METERS (10 FEET) CLEAR WIDTH FOR EACH LANE OF TRAFFIC IN CHANNELIZED AREAS, UNLESS OTHERWISE NOTED ON THE DRAWINGS OR APPROVED BY THE ENGINEER OR DESIGNATED REPRESENTATIVE.
8. THE CONTRACTOR SHALL MAINTAIN DRIVEWAY ACCESS AT ALL TIMES. IF ACCESS CANNOT BE MAINTAINED, THE CONTRACTOR WITH THE APPROVAL OF THE ENGINEER OR DESIGNATED REPRESENTATIVE SHALL PROVIDE AT LEAST 24 HOUR WRITTEN NOTICE OF LIMITED ACCESS TO AFFECTED PROPERTY OWNERS. THE CONTRACTOR SHALL PROVIDE BUSINESS ACCESS SIGNS AS NEEDED TO NFORM DRIVERS OF THE LOCATIONS OF ALL DRIVEWAYS.
9. TEMPORARY LANE CLOSURES IN THE CENTRAL BUSINESS DISTRICT (CBD) OR ON ARTERIAL STREETS SHALL NOT BE PERMITTED DURING THE HOURS OF 7 AM TO 9 AM AND 4 PM TO 6PM MONDAY THROUGH FRIDAY UNLESS PRIOR APPROVAL HAS BEEN OBTAINED FROM THE TRANSPORTATION DIVISION.
10. TRAFFIC CONTROL SHOWN ON STANDARD DETAILS IS TYPICAL. ADDITIONAL SIGNING AND/OR BARRICADING, AS WELL AS TEMPORARY PAVEMENT MARKINGS AND OBLITERATION/RESTORATION OF EXISTING PAVEMENT MARKINGS, MAY BE REQUIRED DEPENDING ON FIELD CONDITIONS. FIELD ADJUSTMENTS TO TRAFFIC CONTROLS WILL NOT BE PAID FOR DIRECTLY, BUT WILL BE CONSIDERED SUBSIDIARY TO ITEM NO. 803S "BARRICADES, SIGNS AND TRAFFIC HANDLING".
11. THE CONTRACTOR SHALL DESIGNATE A COMPETENT PERSON FOR TRAFFIC CONTROL. THE COMPETENT PERSON SHALL MAKE INSPECTIONS OF THE TRAFFIC CONTROL DEVICES AT LEAST TWO (2) TIMES A DAY (ONCE AT THE BEGINNING OF THE DAY AND ONCE AT THE END OF THE DAY), INCLUDING NON-WORKING DAYS, ENSURING THAT ALL DEVICES ARE IN THEIR PROPER PLACE AND ARE IN WORKING ORDER.
12. ALL DEVICES SHALL BE MADE USING MATERIALS LISTED ON THE TxDOT APPROVED PRODUCTS LIST.

CITY OF AUSTIN DEPARTMENT OF PUBLIC WORKS	GENERAL TRAFFIC CONTROL NOTES	
1/4/10 ADOPTED	THE ARCHITECT/ENGINEER ASSUMES RESPONSIBILITY FOR APPROPRIATE USE OF THIS STANDARD.	STANDARD NO. 804S-5 12 OF 13

13. ALL PERSONS WORKING WITHIN THE RIGHT-OF-WAY SHALL WEAR A BRIGHTLY COLORED SAFETY VEST. FOR NIGHTTIME WORK THE VEST SHALL BE RETROREFLECTIVE,
14. WHEN AN INTERSECTION IS CLOSED FOR CONSTRUCTION, THE CONTRACTOR SHALL PROCEED WITH CONSTRUCTION IN SUCH A MANNER THAT THE CLOSURE TIME IS MINIMIZED.
15. THE CONTRACTOR SHALL NOTIFY THE CAPITAL METRO DISPATCHER AT 385-4295 ONE (1) WEEK PRIOR TO LANE CLOSURES ADJACENT TO BUS STOPS.

DURATION OF WORK
WORK DURATION IS A MAJOR FACTOR IN DETERMINING THE NUMBER AND TYPES OF DEVICES USED IN TEMPORARY TRAFFIC ZONES. THE FIVE (5) CATEGORIES OF WORK DURATION AND THEIR TIME AT A LOCATION ARE AS FOLLOWS:

- LONG-TERM STATIONARY-WORK THAT OCCUPIES A LOCATION FOR MORE THAN 3 DAYS.
- INTERMEDIATE-TERM STATIONARY-WORK THAT OCCUPIES A LOCATION FROM OVERNIGHT TO 3 DAYS.
- SHORT-TERM STATIONARY-DAYTIME WORK THAT OCCUPIES A LOCATION FROM 1 TO 12 HOURS.
- SHORT-DURATION WORK THAT OCCUPIES A LOCATION UP TO 1 HOUR.
- MOBILE-WORK THAT MOVES INTERMITTENTLY OR CONTINUOUSLY.

Typical Transition Lengths and Suggested Maximum Spacing of Devices

Posted Speed KPH (MPH)	Formula	Minimum Desirable Taper Lengths (L) Meters (Feet): 3.0(10) Offset Meters (feet)	3.3(11) Offset Meters (feet)	3.6(12) Offset Meters (feet)	Suggested Max. Device Spacing: On a taper Meters (feet)	On a tangent Meters (feet)	Suggested Sign Spacing Meters (Feet) "X" Dimension
50 (30)	$L=\frac{WS^2}{60}$	45 (150)	50 (165)	55 (180)	9 (30)	15-20 (60-75)	40 (120)
55 (35)		65 (205)	70 (225)	75 (245)	10 (35)	25-25 (70-90)	50 (160)
65 (40)		80 (265)	90 (295)	100 (320)	12 (40)	25-30 (80-100)	75 (240)
70 (45)	L=WS	135 (450)	(495)	165 (540)	13 (45)	25-30 (90-110)	100 (320)
80 (50)		150 (500)	165 (550)	180 (600)	15 (50)	30-35 (100-125)	120 (400)
90 (55)		165 (550)	185 (605)	200 (660)	16 (55)	35-40 (110-140)	150 (500)
100 (60)		180 (600)	200 (660)	220 (720)	18 (60)	40-45 (120-150)	180 (600)
105 (65)		195 (650)	215 (715)	235 (780)	19 (65)	40-50 (130-165)	210 (700)
115 (70)		215 (700)	235 (770)	255 (840)	21 (70)	45-55 (140-175)	240 (800)

CITY OF AUSTIN DEPARTMENT OF PUBLIC WORKS	GENERAL TRAFFIC CONTROL NOTES	
1/4/10 ADOPTED	THE ARCHITECT/ENGINEER ASSUMES RESPONSIBILITY FOR APPROPRIATE USE OF THIS STANDARD.	STANDARD NO. 804S-5 13 OF 13

REV. NO.	REVISION DESCRIPTION	APPROVED BY:	DATE

HVJ ASSOCIATES
1701 DIRECTOR'S BLVD
STE. 910
AUSTIN, TX 78744
(737) 222-5151
TEXAS FIRM NO. F-000646

TRAFFIC CONTROL
CITY OF AUSTIN STANDARD DETAIL 804S-5
2 OF 2

HOWARD LANE WATER MAIN EXTENSION
AUSTIN, TX

PROJ. NO. AG1610160.5.1-P
DESIGN: RCJ
DRAWN: RCJ
CHECK: LLB
APPR: RCJ
DATE: 3/1/19

STATE OF TEXAS
REUBEN C. JAMES
1017426
LICENSED
PROFESSIONAL ENGINEER
3/1/19

THESE DESIGN DOCUMENTS ARE NOT TO BE USED FOR CONSTRUCTION PRIOR TO REGULATORY SIGNATURE AND PERMIT.

SHEET
C-218

Dwg Info: P:\civil\Projects\2016\AG-16-10160.5.1-P Howard Ln TCPs, Cobb Fendley\CAD\TCP_00_Howard.dwg - Tab: 804S-5 (2) - Plotted: 3/1/2019 4:47 PM By: REUBEN JAMES

NOTE!
CONTRACTOR IS NOT ALLOWED TO OPERATE AWU GATE VALVES. CONTRACTOR SHALL COORDINATE WITH CITY OF AUSTIN WATER UTILITY AT 512-972-0000 BEFORE WORK BEGINS. CONTRACTOR IS TO NOTIFY THE CONSTRUCTION INSPECTOR AND THE CONSTRUCTION INSPECTOR WILL COORDINATE WITH AWU VALVE CREW.

PROJECT AREA
SEE SHEET C-304 - C-311 FOR WATER LINE RELOCATION P&P'S

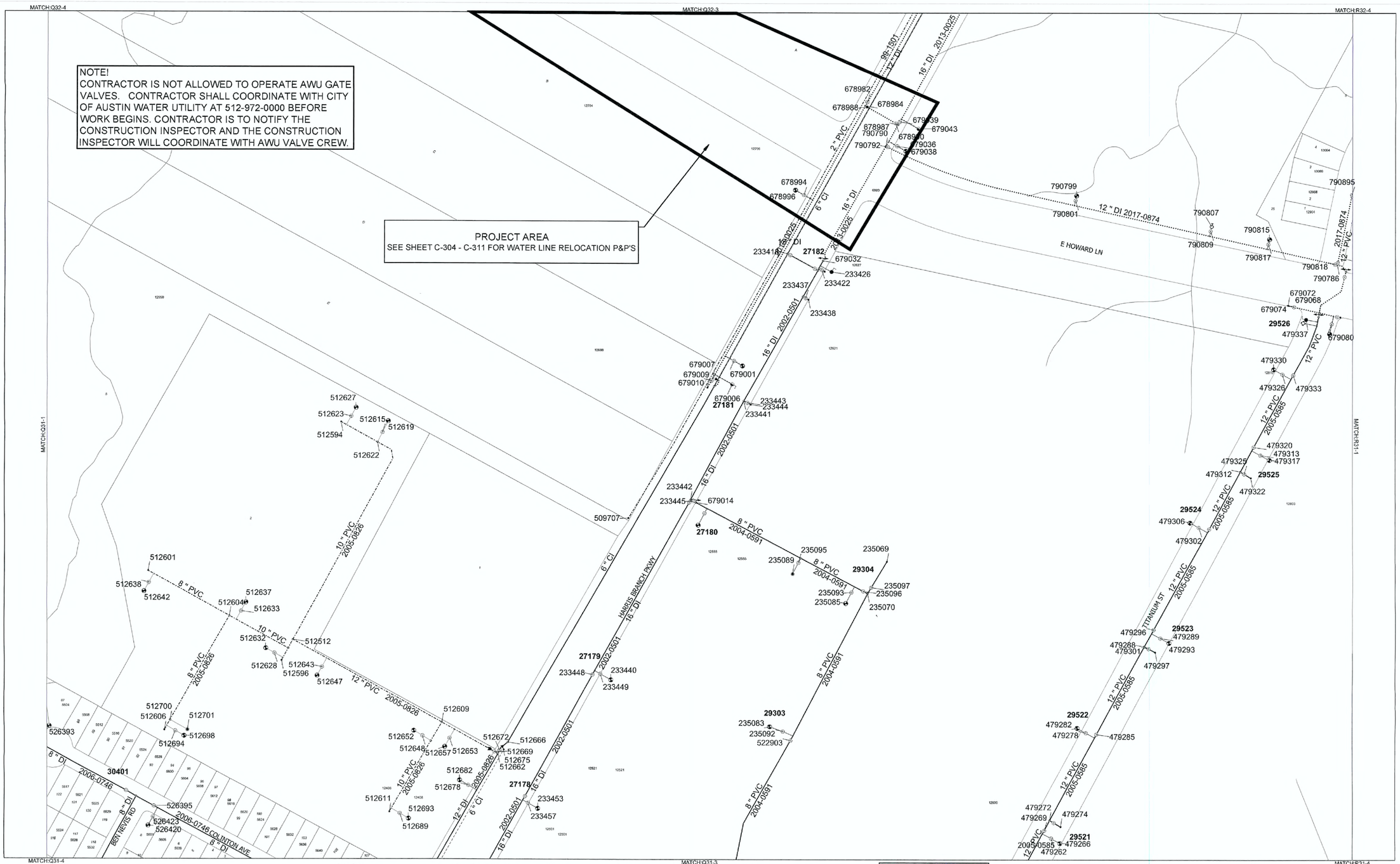

N
1:1200
0 100 200
Feet

This product is for informational purposes and may not have been prepared for or be suitable for legal, engineering, or surveying purposes. It does not represent an on-the-ground survey and represents only the approximate relative location of property boundaries. This product has been produced by the Austin Water Utility for the sole purpose of geographic reference. No warranty is made by the City of Austin regarding specific accuracy or completeness.

Water Mains
- In Service, City Maintained Main
- Proposed for Aband., City Maintained Main
- In Service, City Maintained Lead Line
- Proposed for Aband., City Maintained Lead Line
- Proposed, City Maintained Main
- Proposed, City Maintained Lead Line
- Abandoned, City Maintained Main
- In Service, Private Maintained Main
- Proposed for Aband., Private Maintained Main
- In Service, Private Maintained Lead Line
- Proposed for Aband., Private Maintained Lead Line
- Proposed, Private Maintained Main
- Proposed, Private Maintained Lead Line
- Abandoned, Private Maintained Main

Hydrant
Proposed Hydrant
Project Separator
Backflow Preventer
Water Meter
Drain Manhole
Inspection Manhole
Inspection Manhole with Valve
Water Flow Meter
Water Connection

Fittings
Water Connector
Water Fireline
Water Plug
Water Reducer

Separators
Attribute Change
Maintained By Change
Material Change

Operating Valves
Closed
Open

Zone Valves
Pressure Boundary Valve
Check Valve
Double Check Valve
Pressure Sustaining Valve
Pressure Reducing Valve

Control Valves
Auto Air Release Valve
Combo Air Release Valve
Manual Air Release Valve
Vacuum Release Valve
Drain Valve
Flush Valve
Hydrant PRV

Facilities
TP Water Treatment Plant
PS Pump Station
BS Booster Station
R Reservoir
Sampling Port
Scada Sensor
Raw Water Intake
D Hydro Tank
W Water Well

Grid Maps
Current Sheet

City of Austin
Water Distribution System

Last Update:
8/11/2017

Map Sheet
Q31-2

Produced by GIS Services

REV. NO.	REVISION DESCRIPTION	APPROVED BY:	DATE

CobbFendley
TBPE NO. 274 / TBPLS NO. 10046701
505 EAST HUNTLAND DRIVE, SUITE 100
AUSTIN, TEXAS 78752
512.834.9798 | FAX 512.834.7727
WWW.COBBFENDLEY.COM

AWU GRID MAP (Q31-2)

HOWARD LANE WATER MAIN EXTENSION
AUSTIN, TX

PROJ. NO. 1712-045-01
DESIGN: K. VAN HOOSIER
DRAWN: K. VAN HOOSIER
CHECK: L. PRINCE
APPR: L. PARISHER
DATE: OCTOBER 5, 2018

STATE OF TEXAS
JAMES LANCE PARISHER
106221
LICENSED
PROFESSIONAL ENGINEER
10/5/2018

THESE DESIGN DOCUMENTS ARE NOT TO BE USED FOR CONSTRUCTION PRIOR TO REGULATORY SIGNATURE AND PERMIT.

SHEET
C-300
26 of 47

Dwg Info: G:\CFA\2017\1204501_Howard_Lane_Water_Main\DESIGN\C-101-AWU_GRID.dwg – Tab: Q31-2 – Plotted: 10/5/2018 3:45 PM By: KRISTEN VAN HOOSIER

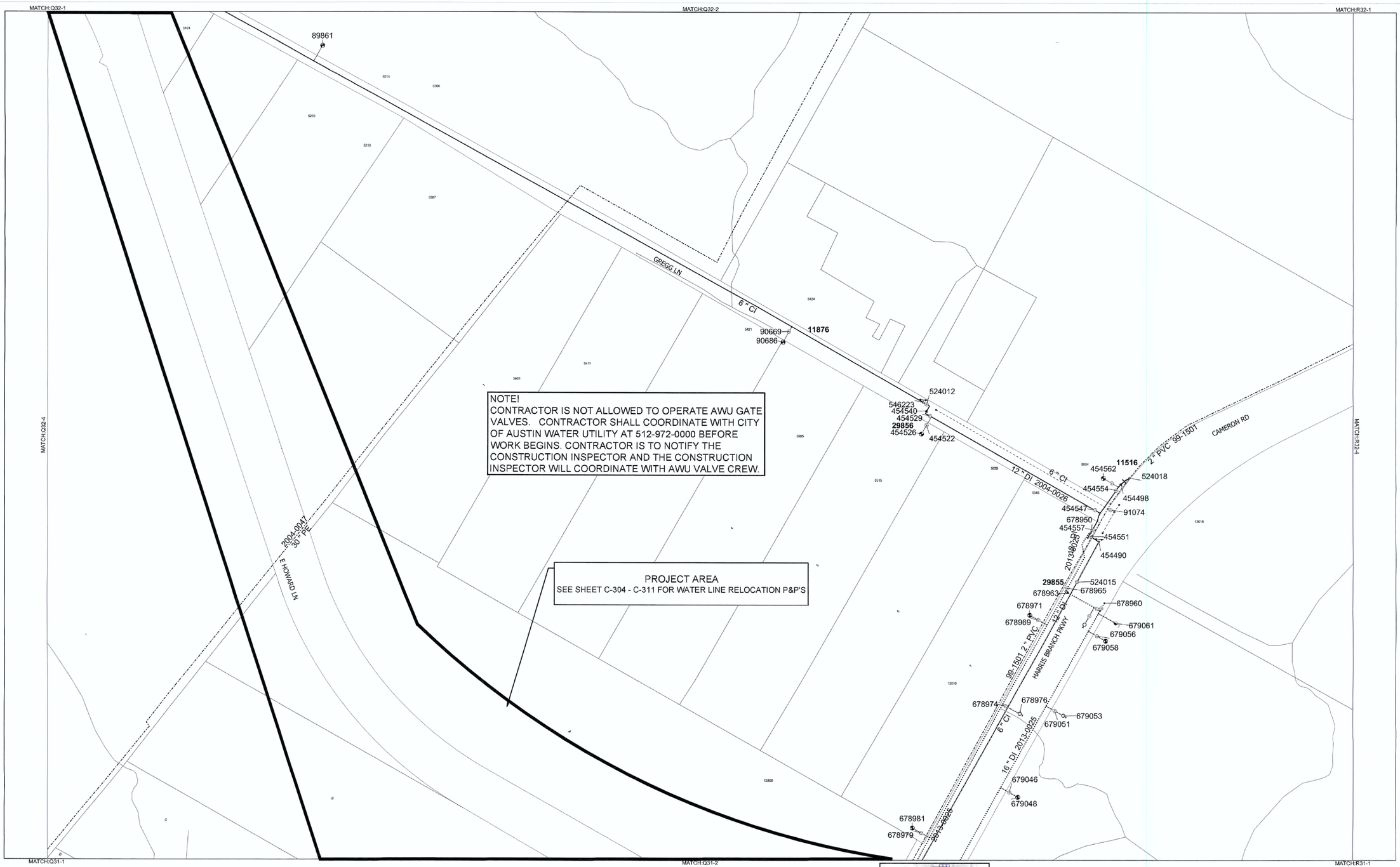

N

1:1200

0 100 200

Feet

This product is for informational purposes and may not have been prepared for or be suitable for legal, engineering, or surveying purposes. It does not represent an on-the-ground survey and represents only the approximate relative location of property boundaries. This product has been produced by the Austin Water Utility for the sole purpose of geographic reference. No warranty is made by the City of Austin regarding specific accuracy or completeness.

Water Mains
- In Service, City Maintained Main
- Proposed for Aband., City Maintained Main
- In Service, City Maintained Lead Line
- Proposed for Aband., City Maintained Lead Line
- Proposed, City Maintained Main
- Proposed, City Maintained Lead Line
- Abandoned, City Maintained Main
- In Service, Private Maintained Main
- Proposed for Aband., Private Maintained Main
- In Service, Private Maintained Lead Line
- Proposed for Aband., Private Maintained Lead Line
- Proposed, Private Maintained Main
- Proposed, Private Maintained Lead Line
- Abandoned, Private Maintained Main

- Hydrant
- Proposed Hydrant
- Project Separator
- Backflow Preventer
- Water Meter
- Drain Manhole
- Inspection Manhole
- Inspection Manhole with Valve
- Water Flow Meter
- Water Connection

Fittings
- Water Connector
- Water Fireline
- Water Plug
- Water Reducer

Separators
- Attribute Change
- Maintained By Change
- Material Change

Operating Valves
- Closed
- Open

Zone Valves
- Pressure Boundary Valve
- Check Valve
- Double Check Valve
- Pressure Sustaining Valve
- Pressure Reducing Valve

Control Valves
- Auto Air Release Valve
- Combo Air Release Valve
- Manual Air Release Valve
- Vacuum Release Valve
- Drain Valve
- Flush Valve
- Hydrant PRV

Facilities
- TP Water Treatment Plant
- PS Pump Station
- B Booster Station
- R Reservoir
- Sampling Port
- Raw Water Intake
- Hydro Tank
- W Water Well

Grid Maps
C = Current Sheet

City of Austin
Water Distribution System

Austin WATER

Last Update:
12/4/2015

Map Sheet
Q32-3

Produced by GIS Services

Dwg Info: G:\CFA\2017\1204501_Howard_Lane_Water_Main\DESIGN\C-101-AWU_GRID.dwg – Tab: Q32-3 – Plotted: 10/5/2018 3:45 PM By: KRISTEN VAN HOOSIER

REV. NO.	REVISION DESCRIPTION	APPROVED BY:	DATE

CobbFendley
TBPE NO. 274 / TBPLS NO. 10046701
505 EAST HUNTLAND DRIVE, SUITE 100
AUSTIN, TEXAS 78752
512.837.7891 FAX 512.837.7727
WWW.COBBFENDLEY.COM

AWU GRID MAP (Q32-3)

HOWARD LANE WATER MAIN EXTENSION
AUSTIN, TX

CITY OF AUSTIN FOUNDED 1839

PROJ. NO. 1712-045-01
DESIGN: K. VAN HOOSIER
DRAWN: K. VAN HOOSIER
CHECK: L. PRINCE
APPR: L. PARISHER
DATE: OCTOBER 5, 2018

STATE OF TEXAS
JAMES LANCE PARISHER
106221
LICENSED
PROFESSIONAL ENGINEER

10/5/2018

THESE DESIGN DOCUMENTS ARE NOT TO BE USED FOR CONSTRUCTION PRIOR TO REGULATORY SIGNATURE AND PERMIT.

SHEET
C-301
27 of 47

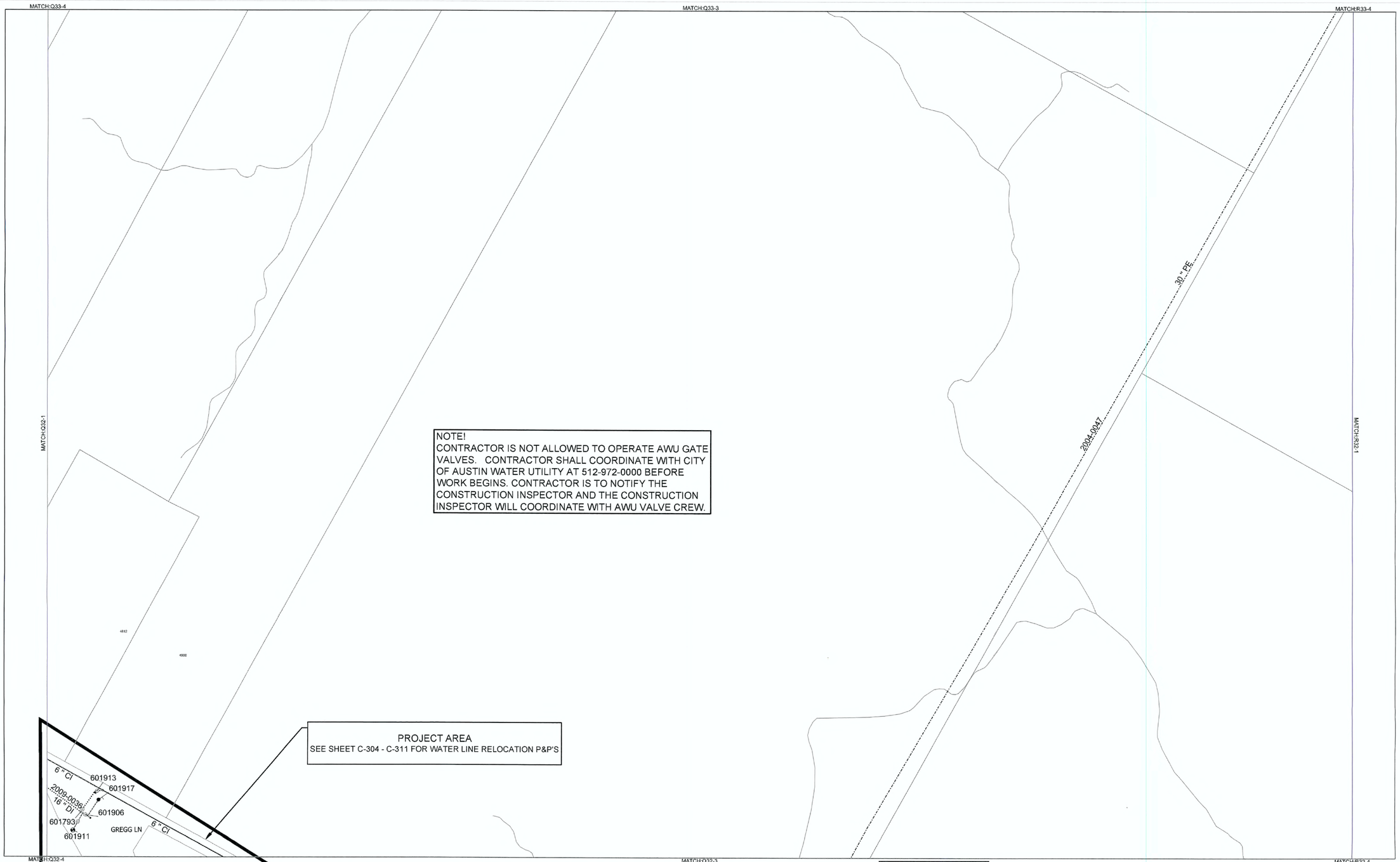

NOTE!
CONTRACTOR IS NOT ALLOWED TO OPERATE AWU GATE VALVES. CONTRACTOR SHALL COORDINATE WITH CITY OF AUSTIN WATER UTILITY AT 512-972-0000 BEFORE WORK BEGINS. CONTRACTOR IS TO NOTIFY THE CONSTRUCTION INSPECTOR AND THE CONSTRUCTION INSPECTOR WILL COORDINATE WITH AWU VALVE CREW.

N

1:1200

0 100 200
Feet

Water Mains
- In Service, City Maintained Main
- Proposed for Aband., City Maintained Main
- In Service, City Maintained Lead Line
- Proposed for Aband., City Maintained Lead Line
- Proposed, City Maintained Main
- Proposed, City Maintained Lead Line
- Abandoned, City Maintained Main
- In Service, Private Maintained Main
- Proposed for Aband., Private Maintained Main
- In Service, Private Maintained Lead Line
- Proposed for Aband., Private Maintained Lead Line
- Proposed, Private Maintained Main
- Proposed, Private Maintained Lead Line
- Abandoned, Private Maintained Main

- Hydrant
- Proposed Hydrant
- Project Separator
- Backflow Preventer
- Water Meter
- Drain Manhole
- Inspection Manhole
- Inspection Manhole with Valve
- Water Flow Meter
- Water Connection

Fittings
- Water Connector
- Water Fireline
- Water Plug
- Water Reducer

Separators
- Attribute Change
- Maintained By Change
- Material Change

Operating Valves
- Closed
- Open

Zone Valves
- Pressure Boundary Valve
- Check Valve
- Double Check Valve
- Pressure Sustaining Valve
- Pressure Reducing Valve

Control Valves
- Auto Air Release Valve
- Combo Air Release Valve
- Manual Air Release Valve
- Vacuum Release Valve
- Drain Valve
- Flush Valve
- Hydrant PRV

Facilities
- Water Treatment Plant
- Pump Station
- Booster Station
- Reservoir
- Sampling Port
- Raw Water Intake
- Hydro Tank
- Water Well

This product is for informational purposes and may not have been prepared for or be suitable for legal, engineering, or surveying purposes. It does not represent an on-the-ground survey and represents only the approximate relative location of property boundaries. This product has been produced by the Austin Water Utility for the sole purpose of geographic reference. No warranty is made by the City of Austin regarding specific accuracy or completeness.

Grid Maps
= Current Sheet

City of Austin
Water Distribution System

Austin Water

Last Update:
12/4/2015

Map Sheet
Q32-2

Produced by GIS Services

REV NO.	REVISION DESCRIPTION	APPROVED BY	DATE

CobbFendley
TBPE NO. 274 / TBPLS NO. 10046701
505 EAST HUNTLAND DRIVE, SUITE 100
AUSTIN, TEXAS 78752
512.834.9708 FAX 512.832.7727
WWW.COBBFENDLEY.COM

AWU GRID MAP (Q32-2)

HOWARD LANE WATER MAIN EXTENSION
AUSTIN, TX

CITY OF AUSTIN
FOUNDED 1839

PROJ. NO. 1712-045-01
DESIGN: K. VAN HOOSIER
DRAWN: K. VAN HOOSIER
CHECK: L. PRINCE
APPR: L. PARISHER
DATE: OCTOBER 5, 2018

STATE OF TEXAS
JAMES LANCE PARISHER
106221
LICENSED
PROFESSIONAL ENGINEER
10/5/2018

THESE DESIGN DOCUMENTS ARE NOT TO BE USED FOR CONSTRUCTION PRIOR TO REGULATORY SIGNATURE AND PERMIT.

SHEET
C-302

Dwg Info: G:\CFA\2017\1204501_Howard_Lane_Water_Main\DESIGN\C-101-AWU_GRID.dwg - Tab: Q32-2 - Plotted: 10/5/2018 3:45 PM By: KRISTEN VAN HOOSIER

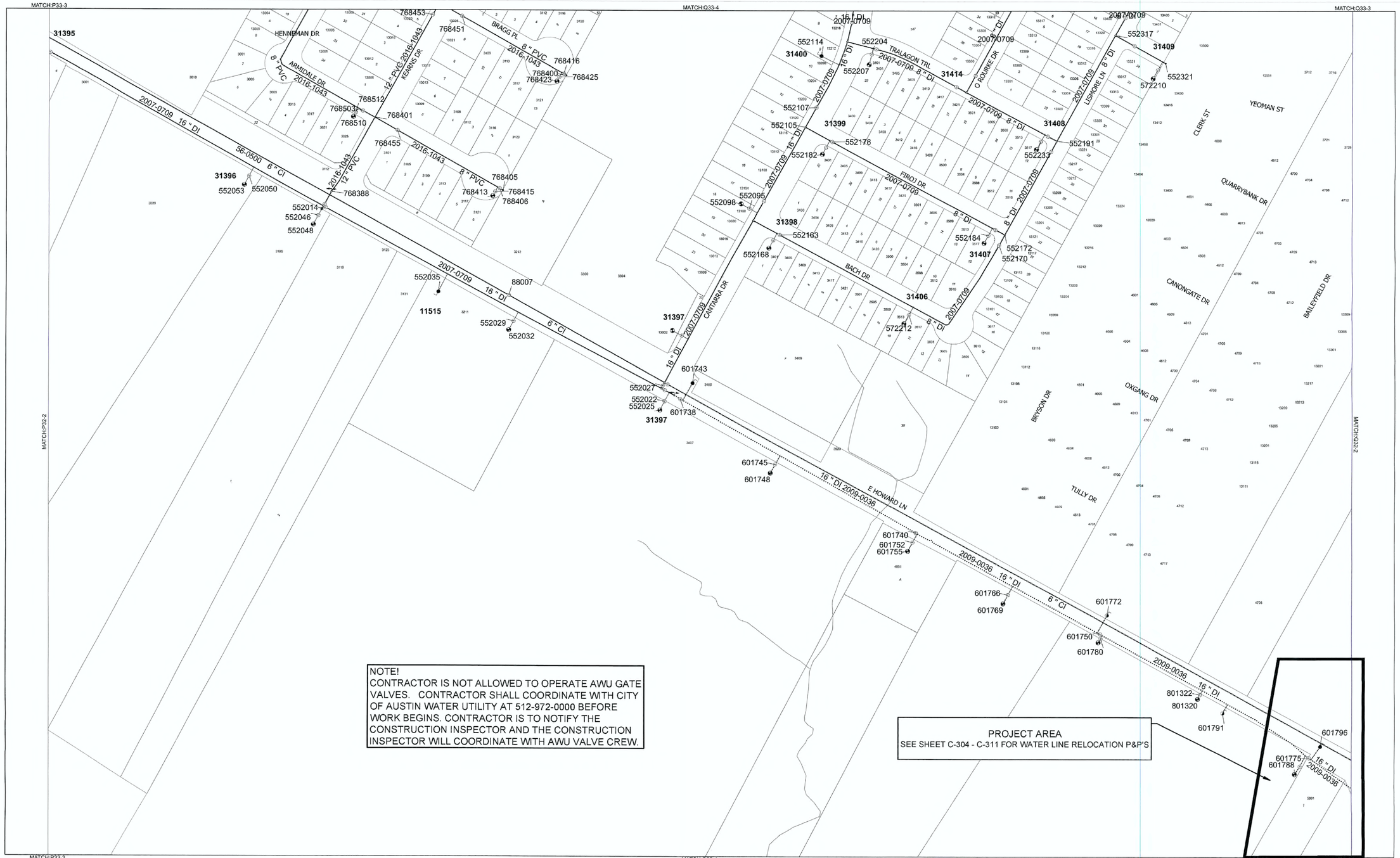

Water Mains
- In Service, City Maintained Main
- Proposed for Aband., City Maintained Main
- In Service, City Maintained Lead Line
- Proposed for Aband., City Maintained Lead Line
- Proposed, City Maintained Main
- Proposed, City Maintained Lead Line
- Abandoned, City Maintained Main
- In Service, Private Maintained Main
- Proposed for Aband., Private Maintained Main
- In Service, Private Maintained Lead Line
- Proposed for Aband., Private Maintained Lead Line
- Proposed, Private Maintained Main
- Proposed, Private Maintained Lead Line
- Abandoned, Private Maintained Main

- Hydrant
- Proposed Hydrant
- Project Separator
- Backflow Preventer
- Water Meter
- Drain Manhole
- Inspection Manhole
- Inspection Manhole with Valve
- Water Flow Meter
- Water Connection

Fittings
- Water Connector
- Water Pileline
- Water Plug
- Water Reducer

Separators
- Attribute Change
- Maintained By Change
- Material Change

Operating Valves
- Closed
- Open

Zone Valves
- Pressure Boundary Valve
- Check Valve
- Double Check Valve
- Pressure Sustaining Valve
- Pressure Reducing Valve

Control Valves
- Auto Air Release Valve
- Combo Air Release Valve
- Manual Air Release Valve
- Vacuum Release Valve
- Drain Valve
- Flush Valve
- Hydrant PRV

Facilities
- TP Water Treatment Plant
- PS Pump Station
- BS Booster Station
- R Reservoir
- Sampling Port
- Scada Sensor
- Raw Water Intake
- Hydro Tank
- W Water Well

N
1:1200
0 100 200
Feet

This product is for informational purposes and may not have been prepared for or be suitable for legal, engineering, or surveying purposes. It does not represent an on-the-ground survey and represents only the approximate relative location of property boundaries. This product has been produced by the Austin Water Utility for the sole purpose of geographic reference. No warranty is made by the City of Austin regarding specific accuracy or completeness.

Grid Maps
Current Sheet

City of Austin
Water Distribution System

Last Update:
11/10/2017

Map Sheet
Q32-1

Produced by GIS Services

REV NO.	REVISION DESCRIPTION	APPROVED BY	DATE

CobbFendley
TBPE NO. 274 / TBPLS NO. 10046701
505 EAST HUNTLAND DRIVE, SUITE 100
AUSTIN, TEXAS 78752
512.834.9788 | FAX 512.834.7727
WWW.COBBFENDLEY.COM

AWU GRID MAP (Q32-1)

HOWARD LANE WATER MAIN EXTENSION
AUSTIN, TX

PROJ. NO. 1712-045-01
DESIGN: K. VAN HOOSIER
DRAWN: K. VAN HOOSIER
CHECK: L. PRINCE
APPR: L. PARISHER
DATE: OCTOBER 5, 2018

STATE OF TEXAS
JAMES LANCE PARISHER
106221
LICENSED PROFESSIONAL ENGINEER
10/5/2018

THESE DESIGN DOCUMENTS ARE NOT TO BE ISSUED FOR CONSTRUCTION PRIOR TO REGULATORY SIGNATURE AND PERMIT.

SHEET
C-303
29 of 47

Dwg Info: G:\CFA\2017\1204501_Howard_Lane_Water_Main\DESIGN\C-101-AWU_GRID.dwg -- Tab: Q32-1 -- Plotted: 10/5/2018 3:46 PM By: KRISTEN VAN HOOSIER

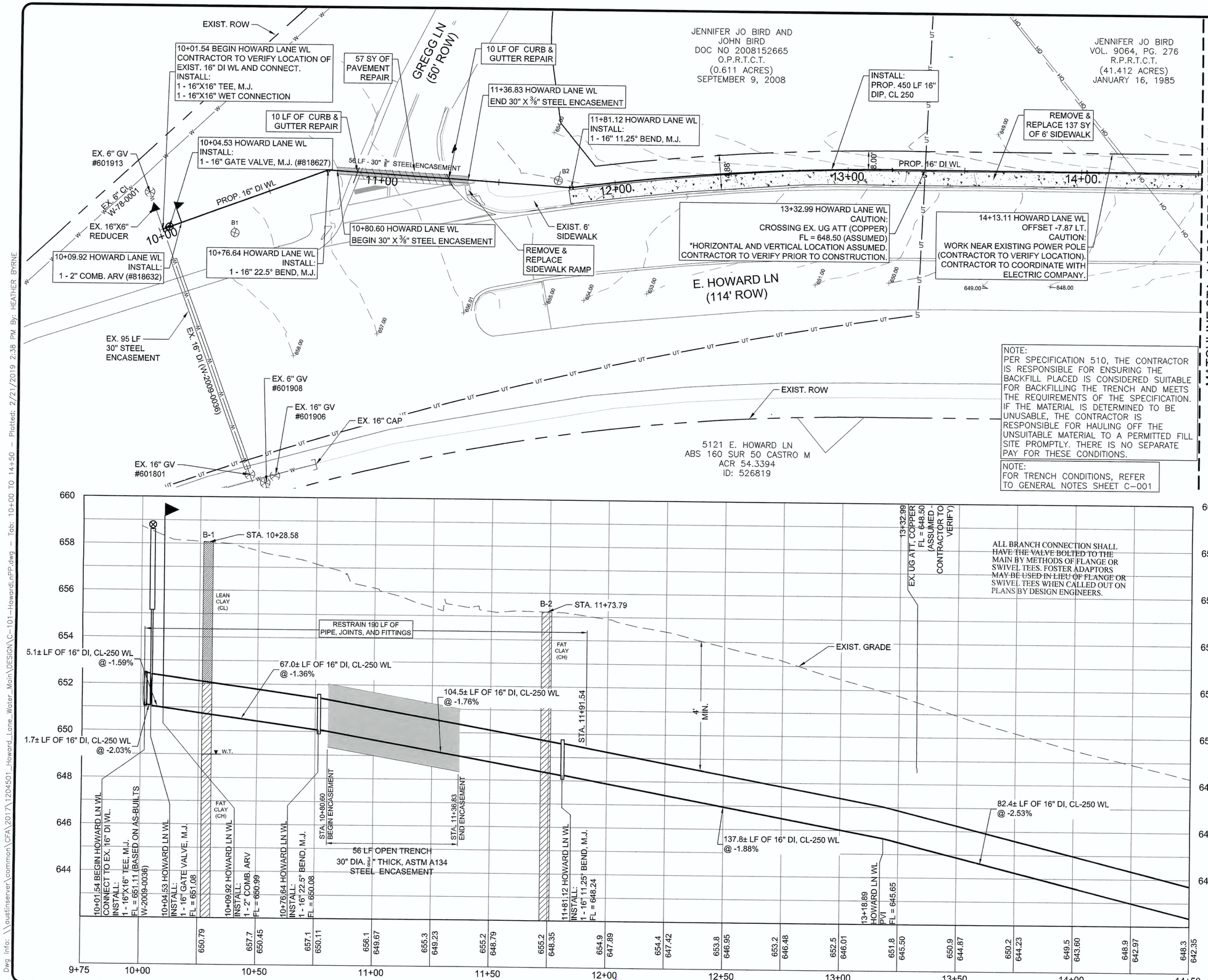

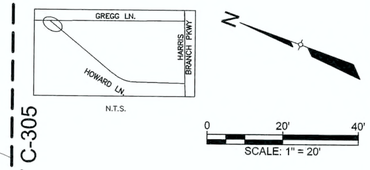

AWU GRID #Q32-3
AWU GRID #Q32-2
AWU INT #33362

LEGEND

- PROP. WATER LINE
- PROP. ROW
- EXIST. ROW
- EASEMENT
- EXIST. E.O.P
- PROP. E.O.P
- UT — EXIST. U.G. TELECOM
- W — EXIST. WATER LINE
- WW — EXIST. WW LINE
- SD — PROP. STORM DRAIN
- G — EXIST. GAS LINE
- OE — EXIST. O.H. ELECTRIC
- UE — EXIST. U.G. ELECTRIC
- X — WIRE FENCE
- PROP. GV
- PROP. FIRE HYDRANT
- EXIST. GV
- EXIST. FIRE HYDRANT
- PAVEMENT REPAIR

GENERAL NOTES:

1. THE LOCATIONS OF EXISTING UNDERGROUND UTILITIES ARE SHOWN IN AN APPROXIMATE WAY ONLY. THE CONTRACTOR SHALL DETERMINE THE EXACT LOCATION OF ALL EXISTING UTILITIES BEFORE COMMENCING WORK AND AGREES TO BE FULLY RESPONSIBLE FOR ANY AND ALL DAMAGES THAT MIGHT BE OCCASIONED BY THE FAILURE TO EXACTLY LOCATE AND PRESERVE ANY AND ALL UNDERGROUND UTILITIES. WHEN THE CONTRACTOR IS USING TRENCHLESS INSTALLATION METHODS, THE CONTRACTOR SHALL LOCATE ALL UTILITIES FOR THE ENTIRE LENGTH OF THE INSTALLATION PRIOR TO ANY ACTIVITIES.
2. ANY DISCREPANCIES FROM WHAT IS SHOWN SHALL BE BROUGHT TO THE ATTENTION OF THE ENGINEER PRIOR TO BEGINNING WORK.
3. ALL WATER LINES 12" AND SMALLER SHALL BE DUCTILE IRON CLASS 350, AND LINES GREATER THAN 12" SHALL BE DUCTILE IRON CLASS 250 AS DEFINED BY AWWA C151.
4. RESTRAIN PIPE JOINTS AND FITTINGS PER SPL WW-27A.

EXISTING GRADE 648.8
FLOW LINE OF PIPE 643.79

PROFILE SCALE
1"=40' HORIZ.
1"=4' VERT.

REVIEWED
MAR 0 5 2019
Austin Water Utility

REV. NO.	REVISION DESCRIPTION	APPROVED BY:	DATE

CobbFendley
TBPE NO. 2214 | TBPLS NO. 10046701
505 EAST HUNTLAND DRIVE, SUITE 100
AUSTIN, TEXAS 78752
512.834.9798 | FAX 512.834.7727
WWW.COBBFENDLEY.COM

HOWARD LN WL STA. 10+00 TO 14+50

HOWARD LANE WATER MAIN EXTENSION
AUSTIN, TX

CITY OF AUSTIN FOUNDED 1839

PROJ. NO. 1712-045-01
DESIGN: K. VAN HOOSIER
DRAWN: K. VAN HOOSIER
CHECK: L. PRINCE
APPR: L. PARISHER
DATE: OCTOBER 5, 2018

STATE OF TEXAS
JAMES LANCE PARISHER
106237
LICENSED PROFESSIONAL ENGINEER
10/5/2018

THESE DESIGN DOCUMENTS ARE NOT TO BE USED FOR CONSTRUCTION PRIOR TO REGULATORY SIGNATURE AND PERMIT.

SHEET
C-304
30 of 47

Dwg Info: \\austinserver\common\CFA\2017\1204501_Howard_Lane_Water_Main\DESIGN\C-101-HowardLnPP.dwg – Tab: 10+00 TO 14+50 – Plotted: 2/21/2019 2:38 PM By: HEATHER BYRNE

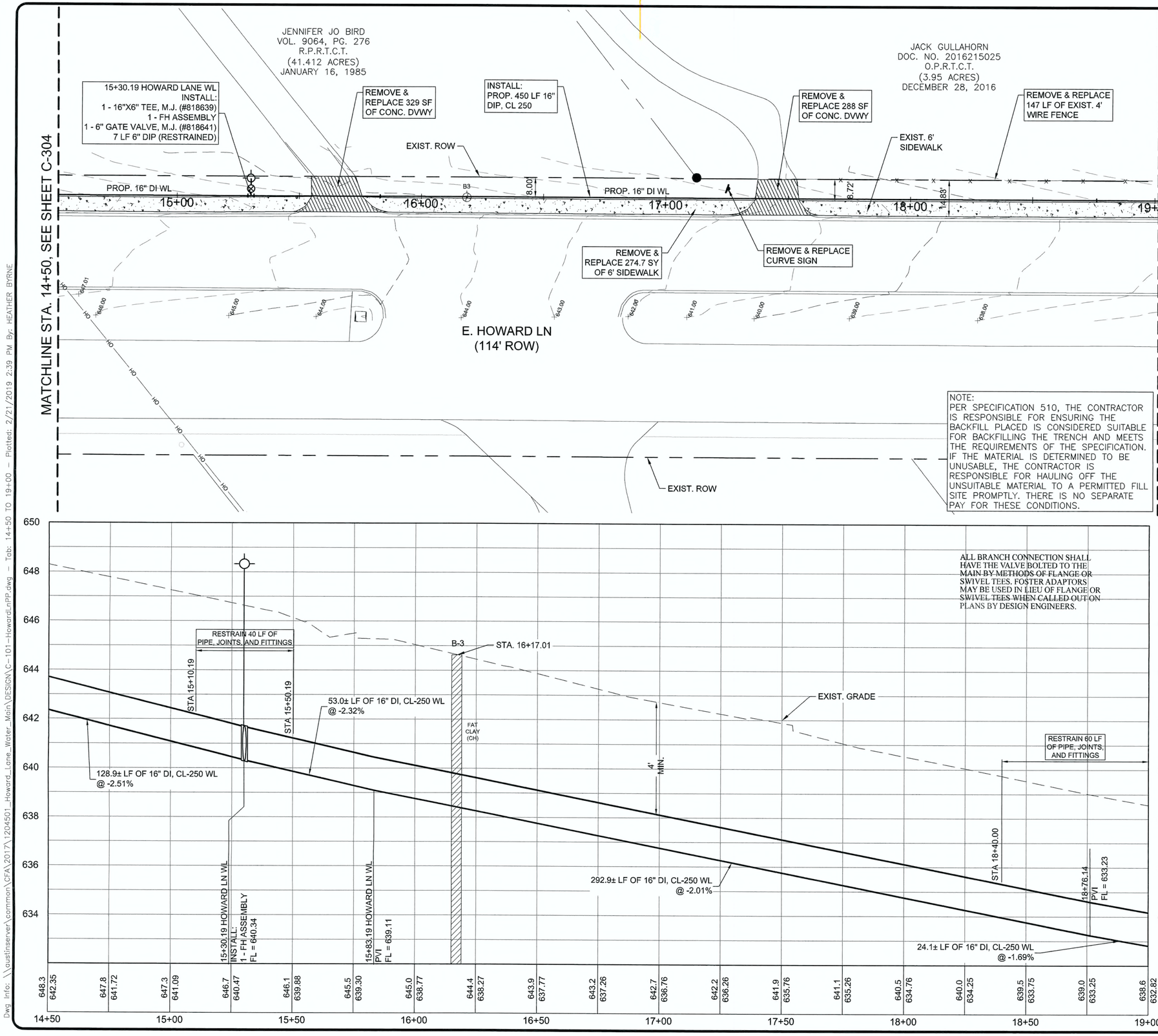

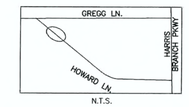

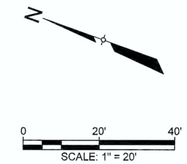

AWU GRID #Q32-3
AWU INT #N/A

LEGEND

- PROP. WATER LINE
- PROP. ROW
- EXIST. ROW
- EASEMENT
- EXIST. E.O.P
- PROP. E.O.P
- UT — EXIST. U.G. TELECOM
- W — EXIST. WATER LINE
- WW — EXIST. WW LINE
- SD — PROP. STORM DRAIN
- G — EXIST. GAS LINE
- OE — EXIST. O.H. ELECTRIC
- UE — EXIST. U.G. ELECTRIC
- X — WIRE FENCE
- PROP. GV
- EXIST. GV
- PROP. FIRE HYDRANT
- EXIST. FIRE HYDRANT
- PAVEMENT REPAIR

GENERAL NOTES:

1. THE LOCATIONS OF EXISTING UNDERGROUND UTILITIES ARE SHOWN IN AN APPROXIMATE WAY ONLY. THE CONTRACTOR SHALL DETERMINE THE EXACT LOCATION OF ALL EXISTING UTILITIES BEFORE COMMENCING WORK AND AGREES TO BE FULLY RESPONSIBLE FOR ANY AND ALL DAMAGES THAT MIGHT BE OCCASIONED BY THE FAILURE TO EXACTLY LOCATE AND PRESERVE ANY AND ALL UNDERGROUND UTILITIES. WHEN THE CONTRACTOR IS USING TRENCHLESS INSTALLATION METHODS, THE CONTRACTOR SHALL LOCATE ALL UTILITIES FOR THE ENTIRE LENGTH OF THE INSTALLATION PRIOR TO ANY ACTIVITIES.
2. ANY DISCREPANCIES FROM WHAT IS SHOWN SHALL BE BROUGHT TO THE ATTENTION OF THE ENGINEER PRIOR TO BEGINNING WORK.
3. ALL WATER LINES 12" AND SMALLER SHALL BE DUCTILE IRON CLASS 350, AND LINES GREATER THAN 12" SHALL BE DUCTILE IRON CLASS 250 AS DEFINED BY AWWA C151.
4. RESTRAIN PIPE JOINTS AND FITTINGS PER SPL WW-27A.

REVIEWED
MAR 0 5 2019
George Resendez
Austin Water Utility

EXISTING GRADE 648.8
FLOW LINE OF PIPE 643.79

PROFILE SCALE
1"=40' HORIZ.
1"=4' VERT.

REV. NO.	REVISION DESCRIPTION	APPROVED BY:	DATE

CobbFendley
TBPE NO. 274 / TBPLS NO. 10046701
505 EAST HUNTLAND DRIVE, SUITE 100
AUSTIN, TEXAS 78752
512.834.9798 | FAX 512.834.7727
WWW.COBBFENDLEY.COM

HOWARD LN WL
STA. 14+50 TO 19+00

HOWARD LANE WATER MAIN EXTENSION
AUSTIN, TX

PROJ. NO. 1712-045-01
DESIGN: K. VAN HOOSIER
DRAWN: K. VAN HOOSIER
CHECK: L. PRINCE
APPR: L. PARISHER
DATE: OCTOBER 5, 2018

STATE OF TEXAS
JAMES LANCE PARISHER
106221
LICENSED
PROFESSIONAL ENGINEER
10/5/2018

THESE DESIGN DOCUMENTS ARE NOT TO BE USED FOR CONSTRUCTION PRIOR TO REGULATORY SIGNATURE AND PERMIT.

SHEET
C-305
31 of 47

Dwg Info: \\austinserver\common\CFA\2017\1204501_Howard_Lane_Water_Main\DESIGN\C-101-HowardLnPP.dwg — Tab: 14+50 TO 19+00 — Plotted: 2/21/2019 2:39 PM By: HEATHER BYRNE

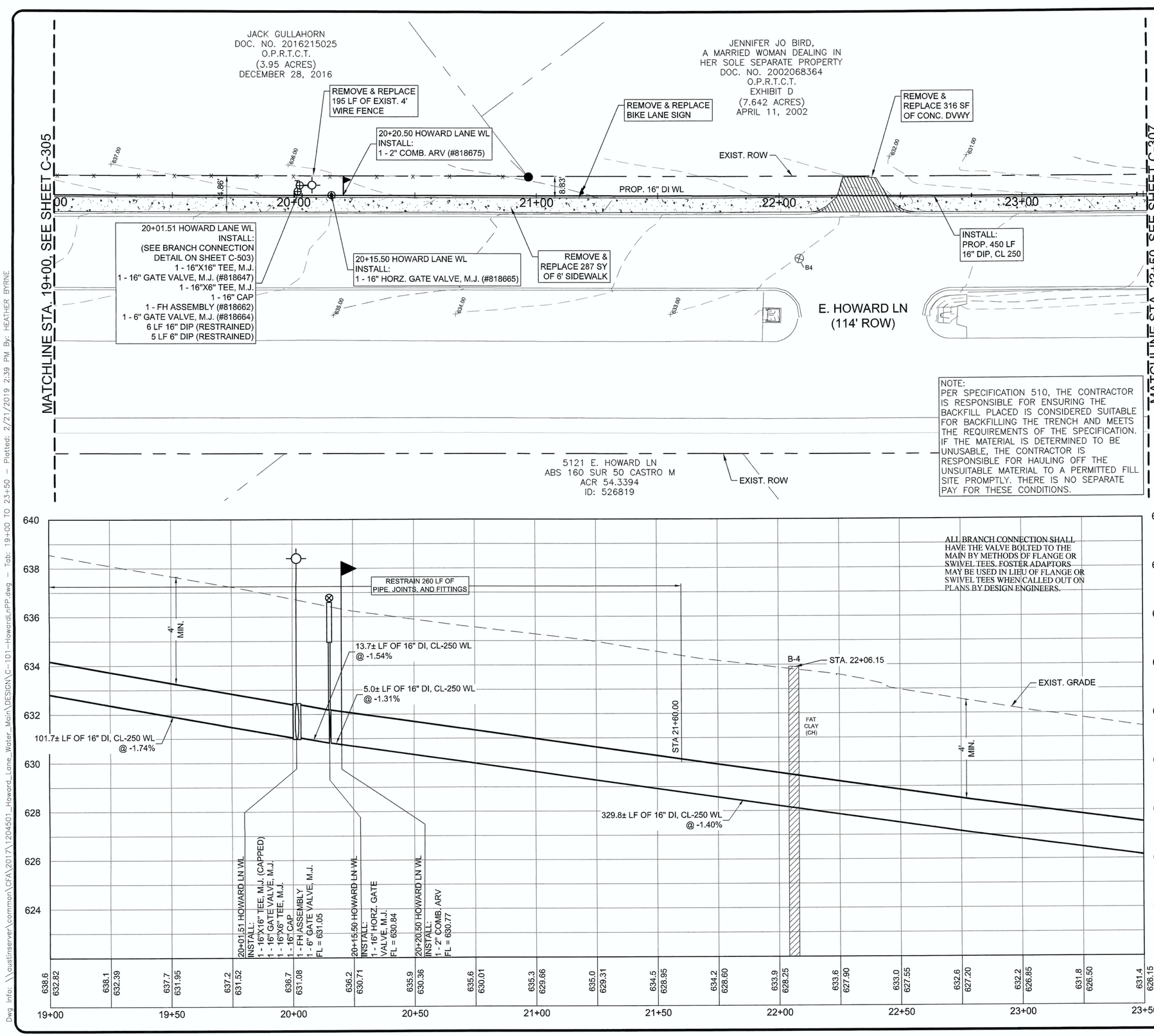

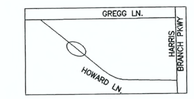

N.T.S.

SCALE: 1" = 20'

AWU GRID #Q32-3
AWU INT #N/A

LEGEND

- PROP. WATER LINE
- PROP. ROW
- EXIST. ROW
- EASEMENT
- EXIST. E.O.P
- PROP. E.O.P
- UT — UT — EXIST. U.G. TELECOM
- W — W — EXIST. WATER LINE
- WW — WW — EXIST. WW LINE
- SD — SD — PROP. STORM DRAIN
- G — G — EXIST. GAS LINE
- OE — OE — EXIST. O.H. ELECTRIC
- UE — UE — EXIST. U.G. ELECTRIC
- X — X — WIRE FENCE
- PROP. GV — PROP. FIRE HYDRANT
- EXIST. GV — EXIST. FIRE HYDRANT
- PAVEMENT REPAIR

GENERAL NOTES:

1. THE LOCATIONS OF EXISTING UNDERGROUND UTILITIES ARE SHOWN IN AN APPROXIMATE WAY ONLY. THE CONTRACTOR SHALL DETERMINE THE EXACT LOCATION OF ALL EXISTING UTILITIES BEFORE COMMENCING WORK AND AGREES TO BE FULLY RESPONSIBLE FOR ANY AND ALL DAMAGES THAT MIGHT BE OCCASIONED BY THE FAILURE TO EXACTLY LOCATE AND PRESERVE ANY AND ALL UNDERGROUND UTILITIES. WHEN THE CONTRACTOR IS USING TRENCHLESS INSTALLATION METHODS, THE CONTRACTOR SHALL LOCATE ALL UTILITIES FOR THE ENTIRE LENGTH OF THE INSTALLATION PRIOR TO ANY ACTIVITIES.
2. ANY DISCREPANCIES FROM WHAT IS SHOWN SHALL BE BROUGHT TO THE ATTENTION OF THE ENGINEER PRIOR TO BEGINNING WORK.
3. ALL WATER LINES 12" AND SMALLER SHALL BE DUCTILE IRON CLASS 350, AND LINES GREATER THAN 12" SHALL BE DUCTILE IRON CLASS 250 AS DEFINED BY AWWA C151.
4. RESTRAIN PIPE JOINTS AND FITTINGS PER SPL WW-27A.

REVIEWED
MAR 0 8 2019
Austin Water Utility

EXISTING GRADE
FLOW LINE OF PIPE

648.8
643.79

PROFILE SCALE
1"=40' HORIZ.
1"=4' VERT.

REV. NO.	REVISION DESCRIPTION	APPROVED BY:	DATE

CobbFendley
TBPE NO. 274 / TBPLS NO. 10046701
505 EAST HUNTLAND DRIVE, SUITE 100
AUSTIN, TEXAS 78752
512.834.9788 | FAX 512.834.7727
WWW.COBBFENDLEY.COM

HOWARD LN WL
STA. 19+00 TO 23+50

HOWARD LANE WATER MAIN EXTENSION
AUSTIN, TX

CITY OF AUSTIN FOUNDED 1839

PROJ. NO. 1712-045-01
DESIGN: K. VAN HOOSIER
DRAWN: K. VAN HOOSIER
CHECK: L. PRINCE
APPR: L. PARISHER
DATE: OCTOBER 5, 2018

STATE OF TEXAS
JAMES LANCE PARISHER
06921
LICENSED PROFESSIONAL ENGINEER
10/5/2018

THESE DESIGN DOCUMENTS ARE NOT TO BE USED FOR CONSTRUCTION PRIOR TO REGULATORY SIGNATURE AND PERMIT.

SHEET
C-306
32 of 47

Dwg Info: \\austinserver\common\CFA\2017\1204501_Howard_Lane_Water_Main\DESIGN\C-101-Howard.nPP.dwg - Tab: 19+00 TO 23+50 - Plotted: 2/21/2019 2:39 PM By: HEATHER BYRNE

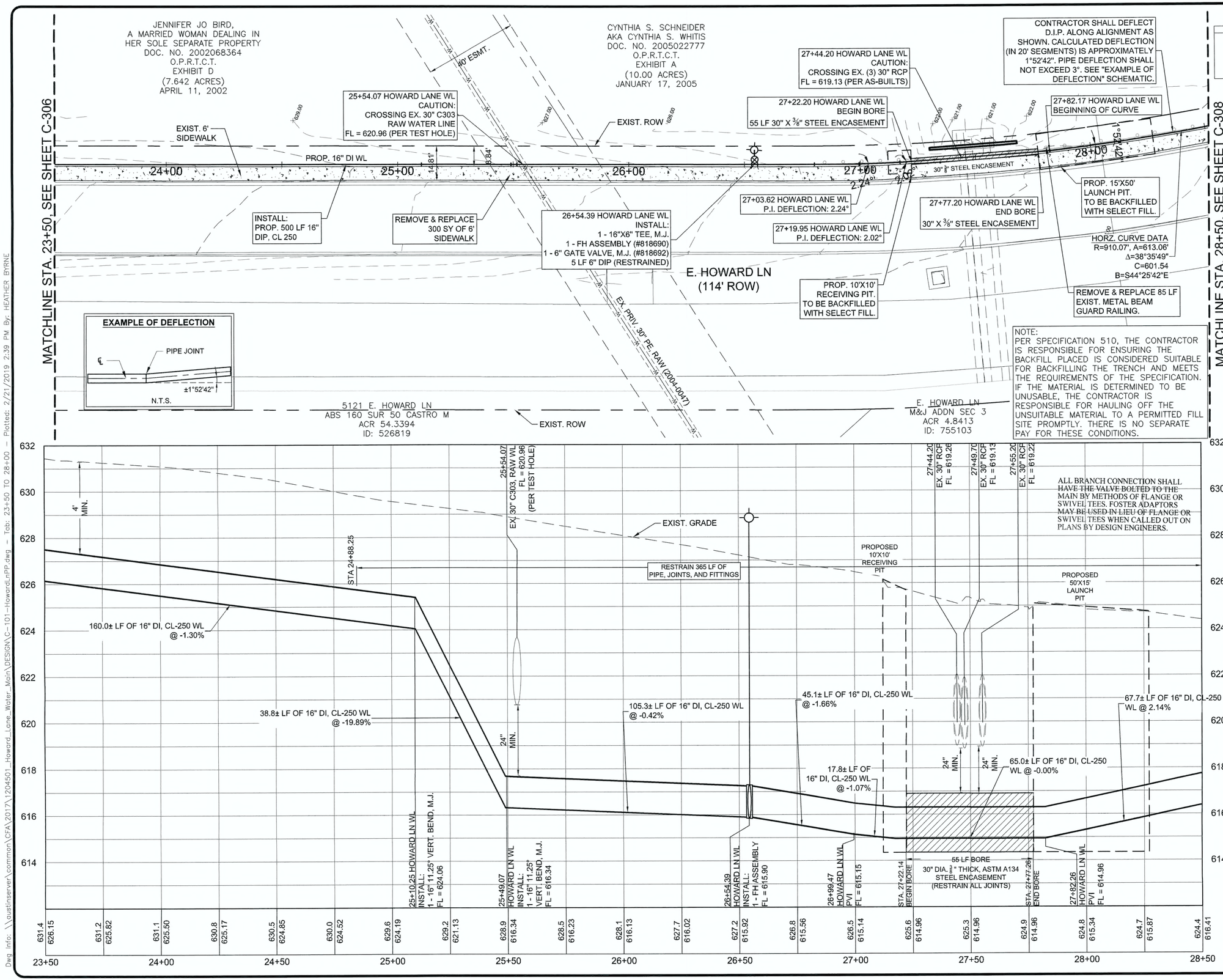

GENERAL NOTES:

1. THE LOCATIONS OF EXISTING UNDERGROUND UTILITIES ARE SHOWN IN AN APPROXIMATE WAY ONLY. THE CONTRACTOR SHALL DETERMINE THE EXACT LOCATION OF ALL EXISTING UTILITIES BEFORE COMMENCING WORK AND AGREES TO BE FULLY RESPONSIBLE FOR ANY AND ALL DAMAGES THAT MIGHT BE OCCASIONED BY THE FAILURE TO EXACTLY LOCATE AND PRESERVE ANY AND ALL UNDERGROUND UTILITIES. WHEN THE CONTRACTOR IS USING TRENCHLESS INSTALLATION METHODS, THE CONTRACTOR SHALL LOCATE ALL UTILITIES FOR THE ENTIRE LENGTH OF THE INSTALLATION PRIOR TO ANY ACTIVITIES.
2. ANY DISCREPANCIES FROM WHAT IS SHOWN SHALL BE BROUGHT TO THE ATTENTION OF THE ENGINEER PRIOR TO BEGINNING WORK.
3. ALL WATER LINES 12" AND SMALLER SHALL BE DUCTILE IRON CLASS 350, AND LINES GREATER THAN 12" SHALL BE DUCTILE IRON CLASS 250 AS DEFINED BY AWWA C151.
4. RESTRAIN PIPE JOINTS AND FITTINGS PER SPL WW-27A.

PROFILE SCALE
1"=40' HORIZ.
1"=4' VERT.

REVIEWED
MAR 08 2019
Austin Water Utility

REV. NO.	REVISION DESCRIPTION	APPROVED BY:	DATE

CobbFendley
TBPE NO. 274 / TBPLS NO. 10046701
505 EAST HUNTLAND DRIVE, SUITE 100
AUSTIN, TEXAS 78752
512.836.9393 / FAX 512.836.7727
WWW.COBBFENDLEY.COM

HOWARD LN WL
STA. 23+50 TO 28+50
HOWARD LANE WATER MAIN EXTENSION
AUSTIN, TX

CITY OF AUSTIN FOUNDED 1839

PROJ. NO. 1712-045-01
DESIGN: K. VAN HOOSIER
DRAWN: K. VAN HOOSIER
CHECK: L. PRINCE
APPR: L. PARISHER
DATE: OCTOBER 5, 2018

STATE OF TEXAS
JAMES LANCE PARISHER
106221
LICENSED
PROFESSIONAL ENGINEER
10/5/2018

THESE DESIGN DOCUMENTS ARE NOT TO BE USED FOR CONSTRUCTION PRIOR TO REGULATORY SIGNATURE AND PERMIT.

SHEET
C-307
33 of 47

Dwg Info: \\austinserver\common\CFA\2017\120450_Howard_Lane_Water_Main\DESIGN\C-101-HowardLnPP.dwg - Tab: 23+50 TO 28+00 - Plotted: 2/21/2019 2:39 PM By: HEATHER BYRNE

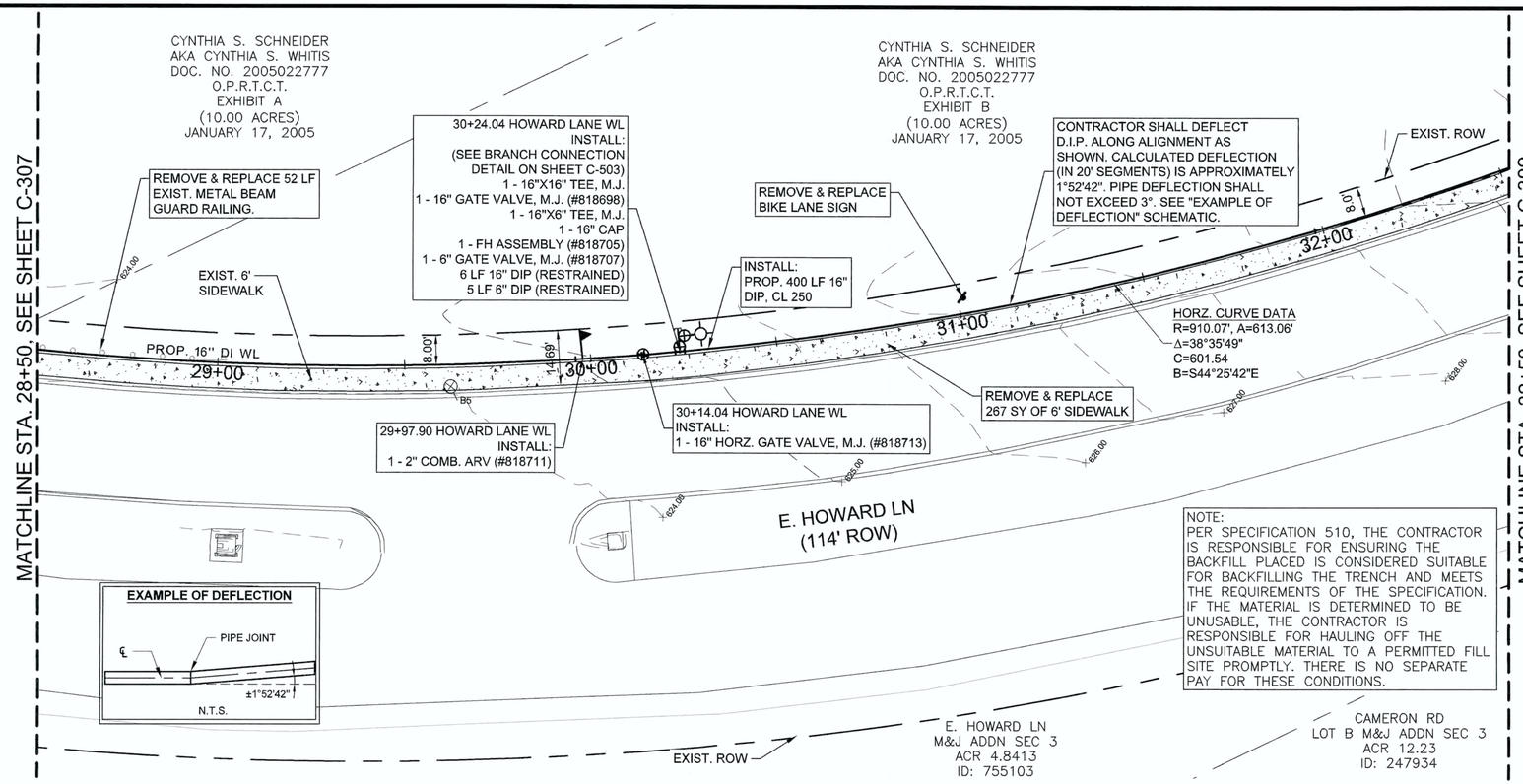

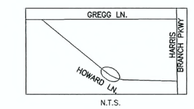

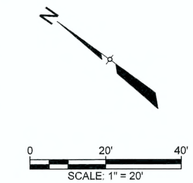

AWU GRID #Q32-3
AWU INT #N/A

LEGEND

	PROP. WATER LINE
	PROP. ROW
	EXIST. ROW
	EASEMENT
	EXIST. E.O.P
	PROP. E.O.P
UT	EXIST. U.G. TELECOM
W	EXIST. WATER LINE
WW	EXIST. WW LINE
SD	PROP. STORM DRAIN
G	EXIST. GAS LINE
OE	EXIST. O.H. ELECTRIC
UE	EXIST. U.G. ELECTRIC
X	WIRE FENCE
PROP. GV	PROP. FIRE HYDRANT
EXIST. GV	EXIST. FIRE HYDRANT
	PAVEMENT REPAIR

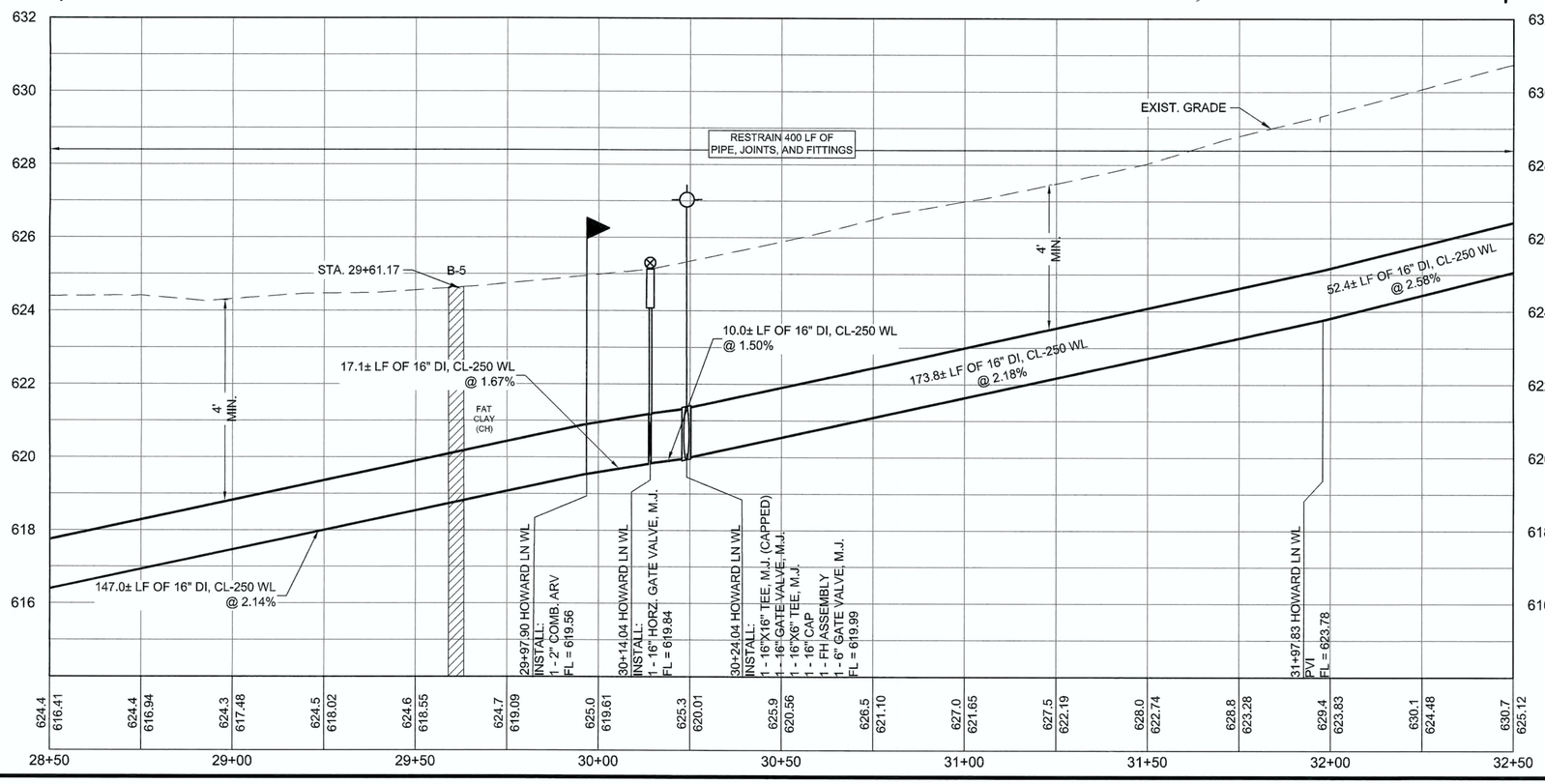

ALL BRANCH CONNECTION SHALL HAVE THE VALVE BOLTED TO THE MAIN BY METHODS OF FLANGE OR SWIVEL TEES. FOSTER ADAPTORS MAY BE USED IN LIEU OF FLANGE OR SWIVEL TEES WHEN CALLED OUT ON PLANS BY DESIGN ENGINEERS.

REVIEWED
MAR 05 2019
Austin Water Utility

EXISTING GRADE
FLOW LINE OF PIPE
648.8
643.79

PROFILE SCALE
1"=40' HORIZ.
1"=4' VERT.

GENERAL NOTES:

1. THE LOCATIONS OF EXISTING UNDERGROUND UTILITIES ARE SHOWN IN AN APPROXIMATE WAY ONLY. THE CONTRACTOR SHALL DETERMINE THE EXACT LOCATION OF ALL EXISTING UTILITIES BEFORE COMMENCING WORK AND AGREES TO BE FULLY RESPONSIBLE FOR ANY AND ALL DAMAGES THAT MIGHT BE OCCASIONED BY THE FAILURE TO EXACTLY LOCATE AND PRESERVE ANY AND ALL UNDERGROUND UTILITIES. WHEN THE CONTRACTOR IS USING TRENCHLESS INSTALLATION METHODS, THE CONTRACTOR SHALL LOCATE ALL UTILITIES FOR THE ENTIRE LENGTH OF THE INSTALLATION PRIOR TO ANY ACTIVITIES.
2. ANY DISCREPANCIES FROM WHAT IS SHOWN SHALL BE BROUGHT TO THE ATTENTION OF THE ENGINEER PRIOR TO BEGINNING WORK.
3. ALL WATER LINES 12" AND SMALLER SHALL BE DUCTILE IRON CLASS 350, AND LINES GREATER THAN 12" SHALL BE DUCTILE IRON CLASS 250 AS DEFINED BY AWWA C151.
4. RESTRAIN PIPE JOINTS AND FITTINGS PER SPL WW-27A.

REV. NO.	REVISION DESCRIPTION	APPROVED BY:	DATE

CobbFendley
TBPE NO. 2147 | TBPLS NO. 10064701
505 EAST HUTCH LAND DRIVE, SUITE 100
AUSTIN, TEXAS 78752
512.834.9798 | FAX 512.834.7727
WWW.COBBFENDLEY.COM

HOWARD LN WL
STA. 28+50 TO 32+50
HOWARD LANE WATER MAIN EXTENSION
AUSTIN, TX

CITY OF AUSTIN FOUNDED 1839

PROJ. NO. 1712-045-01
DESIGN: K. VAN HOOSIER
DRAWN: K. VAN HOOSIER
CHECK: L. PRINCE
APPR: L. PARISHER
DATE: OCTOBER 5, 2018

STATE OF TEXAS
JAMES LANCE PARISHER
106221
LICENSED PROFESSIONAL ENGINEER
10/5/2018

THESE DESIGN DOCUMENTS ARE NOT TO BE USED FOR CONSTRUCTION PRIOR TO REGULATORY SIGNATURE AND PERMIT.

SHEET
C-308
34 of 47

Dwg Info: \\austinserver\common\CFA\2017\1204501_Howard_Lane_Water_Main\DESIGN\C-101-HowardLnPP.dwg – Tab: 28+00 TO 32+50 – Plotted: 2/21/2019 2:39 PM By: HEATHER BYRNE

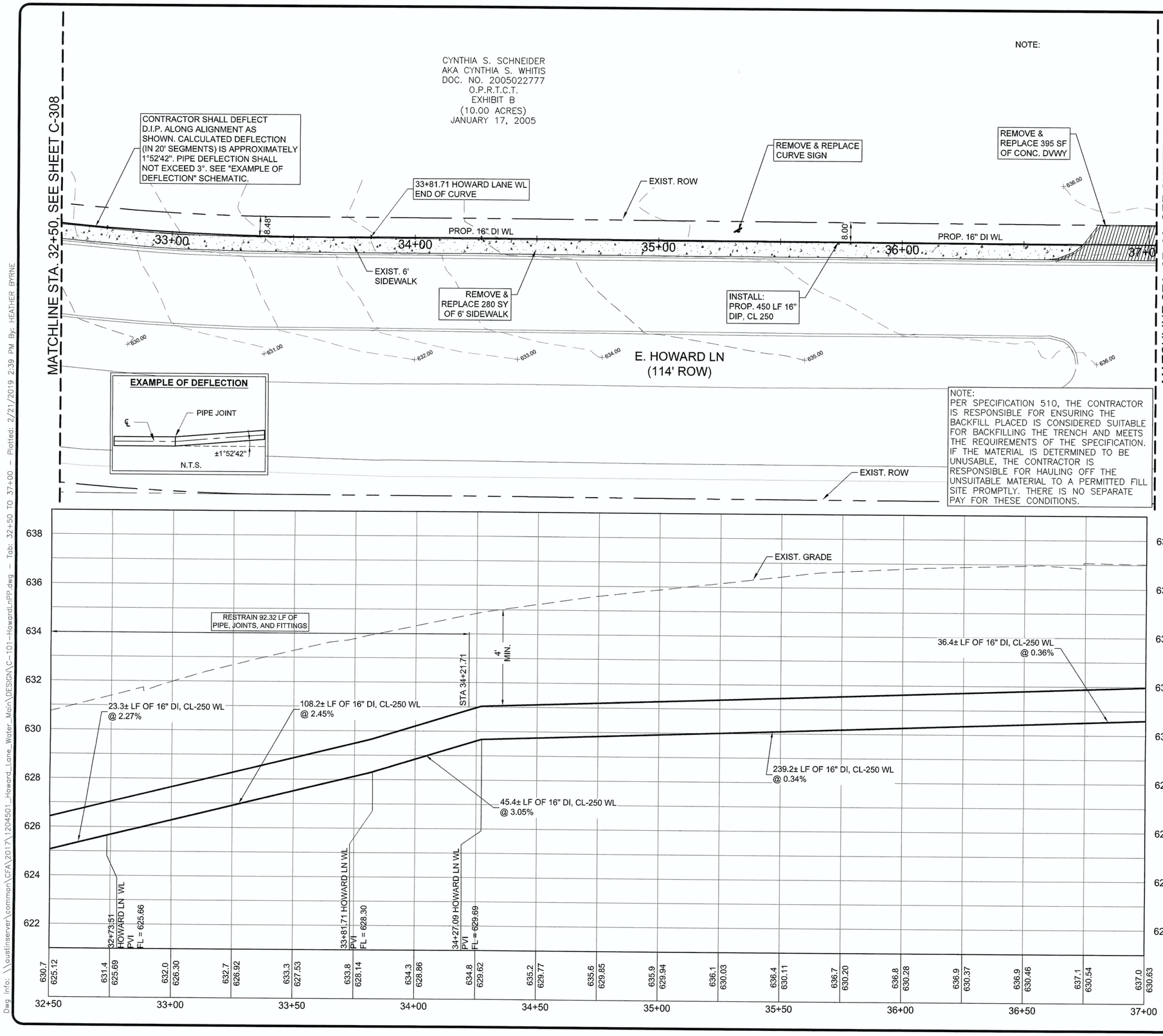

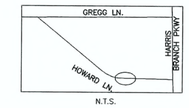

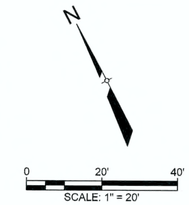

AWU GRID #Q32-3
AWU GRID #Q31-2
AWU INT #N/A

LEGEND

- PROP. WATER LINE
- PROP. ROW
- EXIST. ROW
- EASEMENT
- EXIST. E.O.P
- PROP. E.O.P
- UT — UT — EXIST. U.G. TELECOM
- W — W — EXIST. WATER LINE
- WW — WW — EXIST. WW LINE
- SD — SD — PROP. STORM DRAIN
- G — G — EXIST. GAS LINE
- OE — OE — EXIST. O.H. ELECTRIC
- UE — UE — EXIST. U.G. ELECTRIC
- X — X — WIRE FENCE
- PROP. GV
- PROP. FIRE HYDRANT
- EXIST. GV
- EXIST. FIRE HYDRANT
- PAVEMENT REPAIR

GENERAL NOTES:

1. THE LOCATIONS OF EXISTING UNDERGROUND UTILITIES ARE SHOWN IN AN APPROXIMATE WAY ONLY. THE CONTRACTOR SHALL DETERMINE THE EXACT LOCATION OF ALL EXISTING UTILITIES BEFORE COMMENCING WORK AND AGREES TO BE FULLY RESPONSIBLE FOR ANY AND ALL DAMAGES THAT MIGHT BE OCCASIONED BY THE FAILURE TO EXACTLY LOCATE AND PRESERVE ANY AND ALL UNDERGROUND UTILITIES. WHEN THE CONTRACTOR IS USING TRENCHLESS INSTALLATION METHODS, THE CONTRACTOR SHALL LOCATE ALL UTILITIES FOR THE ENTIRE LENGTH OF THE INSTALLATION PRIOR TO ANY ACTIVITIES.
2. ANY DISCREPANCIES FROM WHAT IS SHOWN SHALL BE BROUGHT TO THE ATTENTION OF THE ENGINEER PRIOR TO BEGINNING WORK.
3. ALL WATER LINES 12" AND SMALLER SHALL BE DUCTILE IRON CLASS 350, AND LINES GREATER THAN 12" SHALL BE DUCTILE IRON CLASS 250 AS DEFINED BY AWWA C151.

RESTRAIN PIPE JOINTS AND FITTINGS PER SPL WW-27A.

4. ALL BRANCH CONNECTION SHALL HAVE THE VALVE BOLTED TO THE MAIN BY METHODS OF FLANGE OR SWIVEL TEES. FOSTER ADAPTORS MAY BE USED IN LIEU OF FLANGE OR SWIVEL TEES WHEN CALLED OUT ON PLANS BY DESIGN ENGINEERS.

REVIEWED
MAR 0 8 2019
Austin Water Utility

EXISTING GRADE 648.8
FLOW LINE OF PIPE 643.79

PROFILE SCALE
1"=40' HORIZ.
1"=4' VERT.

REV. NO.	REVISION DESCRIPTION	APPROVED BY:	DATE

CobbFendley
TBPE NO. 274 | TBPLS NO. 10194670
505 EAST HUNTLAND DRIVE, SUITE 100
AUSTIN, TEXAS 78752
512.834.9798 | FAX 512.834.7727
WWW.COBBFENDLEY.COM

HOWARD LN WL
STA. 32+50 TO 37+00

HOWARD LANE WATER MAIN EXTENSION
AUSTIN, TX

CITY OF AUSTIN FOUNDED 1839

PROJ. NO. 1712-045-01
DESIGN: K. VAN HOOSIER
DRAWN: K. VAN HOOSIER
CHECK: L. PRINCE
APPR: L. PARISHER
DATE: OCTOBER 5, 2018

STATE OF TEXAS
JAMES LANCE PARISHER
106277
LICENSED PROFESSIONAL ENGINEER
10/5/2018

THESE DESIGN DOCUMENTS ARE NOT TO BE USED FOR CONSTRUCTION PRIOR TO REGULATORY SIGNATURE AND PERMIT.

SHEET
C-309
35 of 47

Dwg Info: \\austinserver\common\CFA\2017\204501_Howard_Lane_Water_Main\DESIGN\C-101-Howard_PP.dwg - Tab: 32+50 TO 37+00 - Plotted: 2/21/2019 2:39 PM By: HEATHER BYRNE

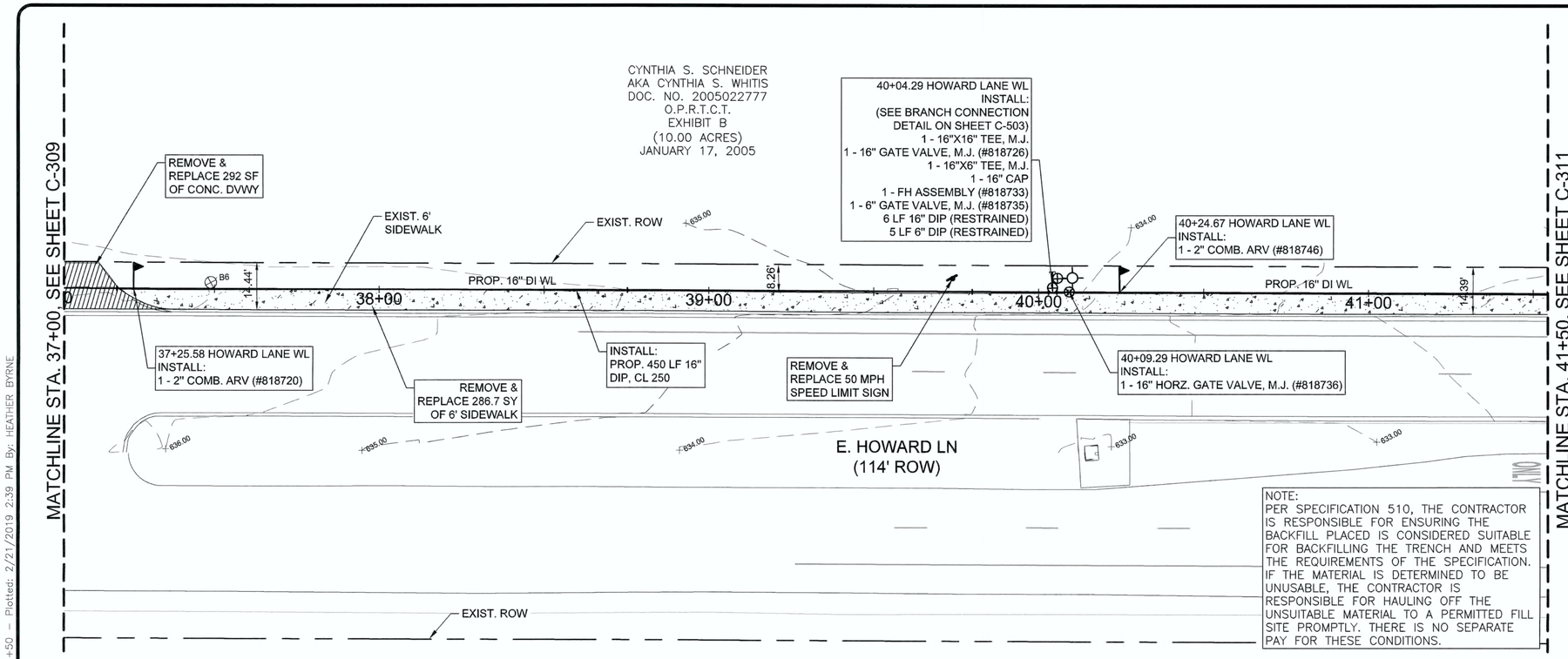

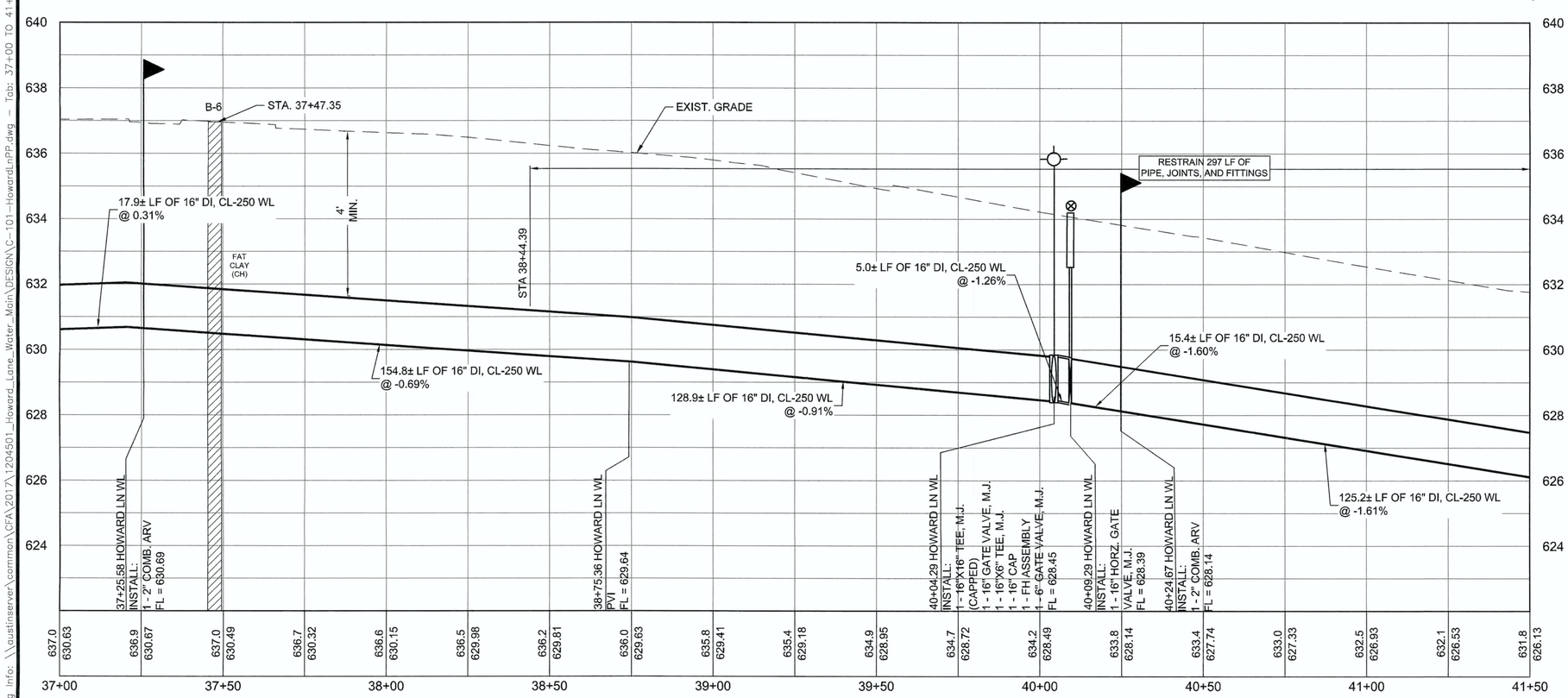

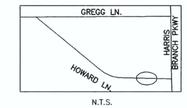

SCALE: 1" = 20'

AWU GRID #Q31-2
AWU INT #N/A

LEGEND

- PROP. WATER LINE
- PROP. ROW
- EXIST. ROW
- EASEMENT
- EXIST. E.O.P
- PROP. E.O.P
- UT — UT — EXIST. U.G. TELECOM
- W — W — EXIST. WATER LINE
- WW — WW — EXIST. WW LINE
- SD — SD — PROP. STORM DRAIN
- G — G — EXIST. GAS LINE
- OE — OE — EXIST. O.H. ELECTRIC
- UE — UE — EXIST. U.G. ELECTRIC
- X — X — WIRE FENCE
- PROP. GV
- PROP. FIRE HYDRANT
- EXIST. GV
- EXIST. FIRE HYDRANT
- PAVEMENT REPAIR

GENERAL NOTES:

1. THE LOCATIONS OF EXISTING UNDERGROUND UTILITIES ARE SHOWN IN AN APPROXIMATE WAY ONLY. THE CONTRACTOR SHALL DETERMINE THE EXACT LOCATION OF ALL EXISTING UTILITIES BEFORE COMMENCING WORK AND AGREES TO BE FULLY RESPONSIBLE FOR ANY AND ALL DAMAGES THAT MIGHT BE OCCASIONED BY THE FAILURE TO EXACTLY LOCATE AND PRESERVE ANY AND ALL UNDERGROUND UTILITIES. WHEN THE CONTRACTOR IS USING TRENCHLESS INSTALLATION METHODS, THE CONTRACTOR SHALL LOCATE ALL UTILITIES FOR THE ENTIRE LENGTH OF THE INSTALLATION PRIOR TO ANY ACTIVITIES.
2. ANY DISCREPANCIES FROM WHAT IS SHOWN SHALL BE BROUGHT TO THE ATTENTION OF THE ENGINEER PRIOR TO BEGINNING WORK.
3. ALL WATER LINES 12" AND SMALLER SHALL BE DUCTILE IRON CLASS 350, AND LINES GREATER THAN 12" SHALL BE DUCTILE IRON CLASS 250 AS DEFINED BY AWWA C151.
4. RESTRAIN PIPE JOINTS AND FITTINGS PER SPL WW-27A.

ALL BRANCH CONNECTION SHALL HAVE THE VALVE BOLTED TO THE MAIN BY METHODS OF FLANGE OR SWIVEL TEES. FOSTER ADAPTORS MAY BE USED IN LIEU OF FLANGE OR SWIVEL TEES WHEN CALLED OUT ON PLANS BY DESIGN ENGINEERS.

REVIEWED
MAR 0 8 2019
Austin Water Utility

EXISTING GRADE 648.8
FLOW LINE OF PIPE 643.79

PROFILE SCALE
1"=40' HORIZ.
1"=4' VERT.

REV. NO.	REVISION DESCRIPTION	APPROVED BY:	DATE

CobbFendley
TBPE NO. 274 / TBPLS NO. 10046701
505 EAST HUNTLAND DRIVE, SUITE 100
AUSTIN, TEXAS 78752
512.834.9798 | FAX 512.834.7727
WWW.COBBFENDLEY.COM

HOWARD LN WL
STA. 37+00 TO 41+50
HOWARD LANE WATER MAIN EXTENSION
AUSTIN, TX

PROJ. NO. 1712-045-01
DESIGN: K. VAN HOOSIER
DRAWN: K. VAN HOOSIER
CHECK: L. PRINCE
APPR: L. PARISHER
DATE: OCTOBER 5, 2018

STATE OF TEXAS
JAMES LANCE PARISHER
106221
LICENSED PROFESSIONAL ENGINEER
10/5/2018

THESE DESIGN DOCUMENTS ARE NOT TO BE USED FOR CONSTRUCTION PRIOR TO REGULATORY SIGNATURE AND PERMIT.

SHEET
C-310
36 of 47

Dwg Info: \\austinserver\common\CFA\2017\1204501_Howard_Lane_Water_Main\DESIGN\C-101-HowardLnPP.dwg - Tab: 37+00 TO 41+50 - Plotted: 2/21/2019 2:39 PM By: HEATHER BYRNE

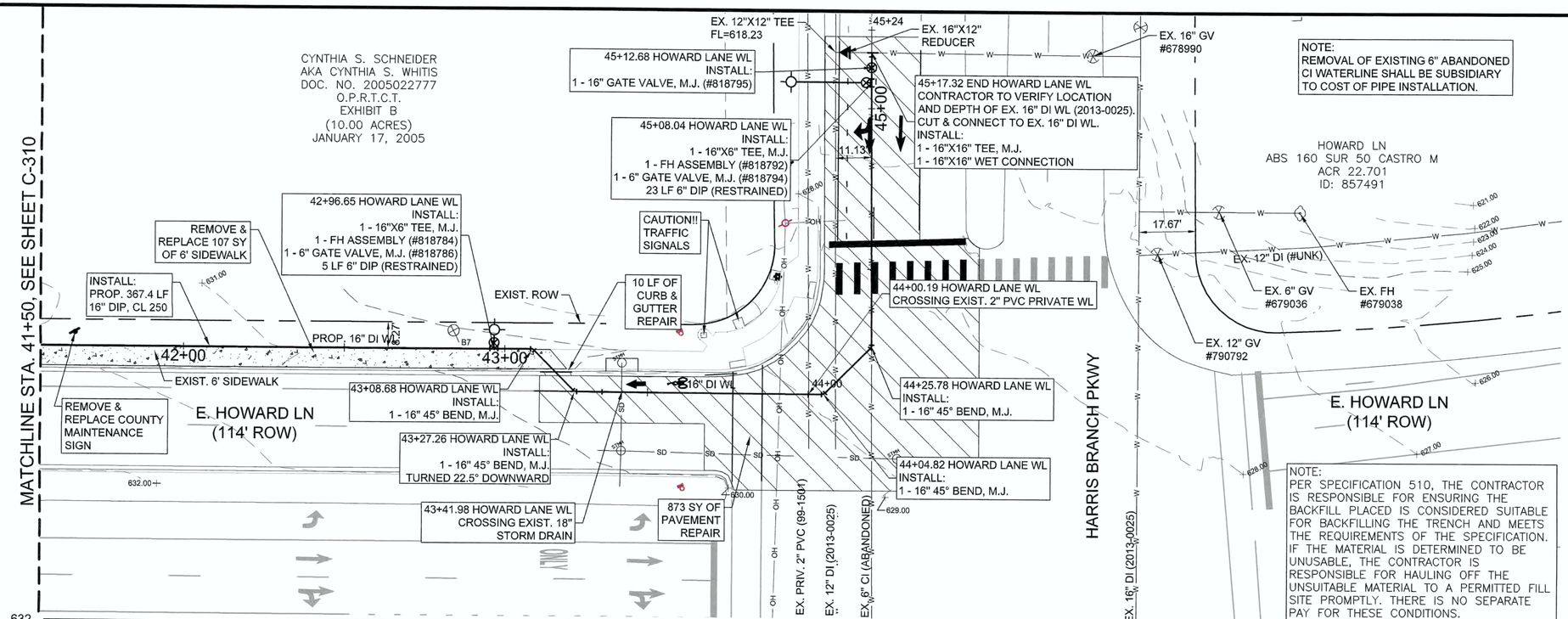

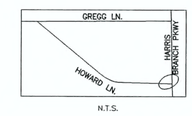

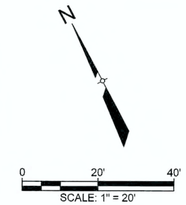

AWU GRID #Q31-2
AWU INT #27182

LEGEND

- PROP. WATER LINE
- PROP. ROW
- EXIST. ROW
- EASEMENT
- EXIST. E.O.P
- PROP. E.O.P
- UT — EXIST. U.G. TELECOM
- W — EXIST. WATER LINE
- WW — EXIST. WW LINE
- SD — PROP. STORM DRAIN
- G — EXIST. GAS LINE
- OE — EXIST. O.H. ELECTRIC
- UE — EXIST. U.G. ELECTRIC
- X — WIRE FENCE
- PROP. GV
- PROP. FIRE HYDRANT
- EXIST. GV
- EXIST. FIRE HYDRANT
- PAVEMENT REPAIR

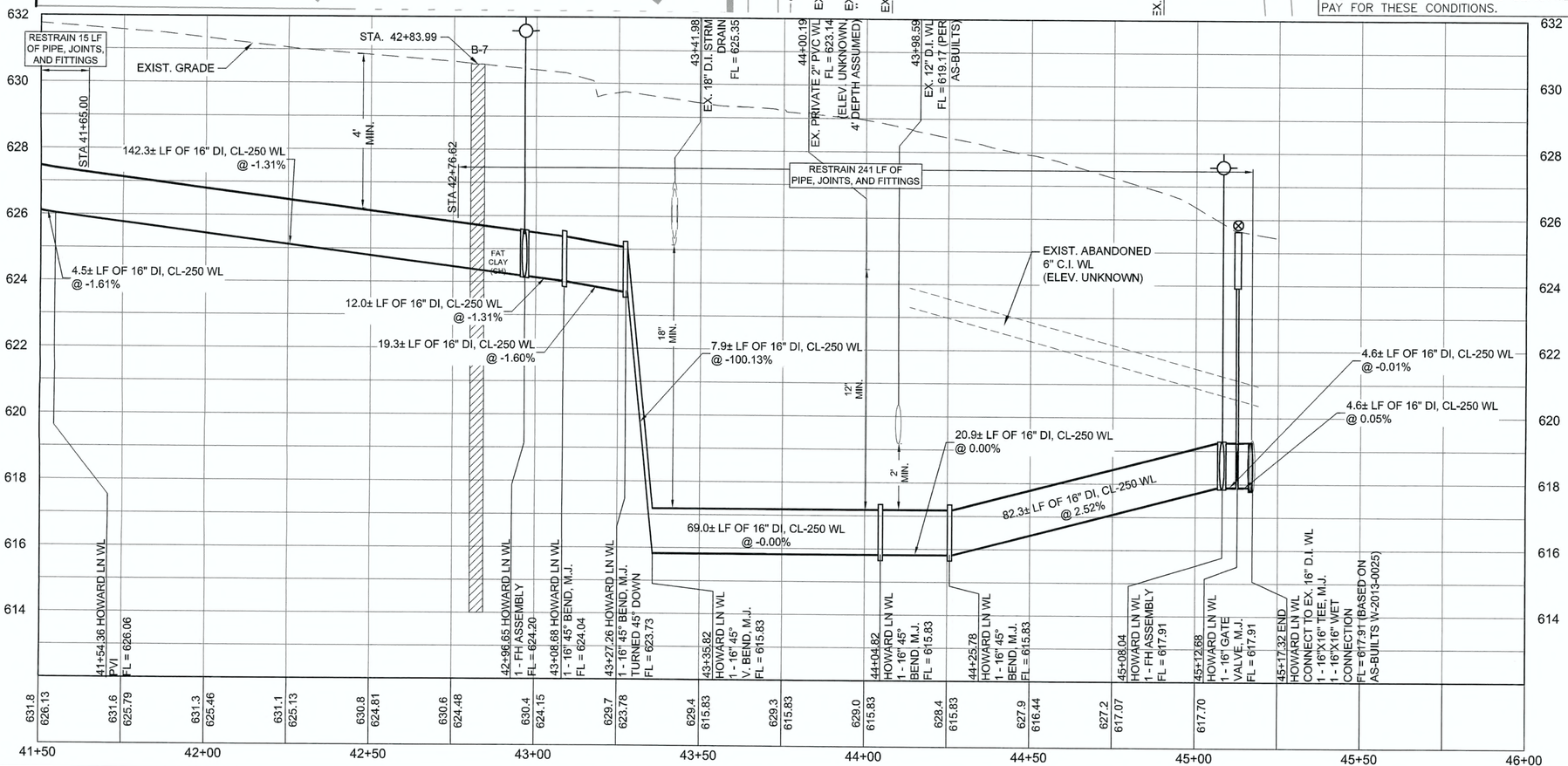

GENERAL NOTES:

1. THE LOCATIONS OF EXISTING UNDERGROUND UTILITIES ARE SHOWN IN AN APPROXIMATE WAY ONLY. THE CONTRACTOR SHALL DETERMINE THE EXACT LOCATION OF ALL EXISTING UTILITIES BEFORE COMMENCING WORK AND AGREES TO BE FULLY RESPONSIBLE FOR ANY AND ALL DAMAGES THAT MIGHT BE OCCASIONED BY THE FAILURE TO EXACTLY LOCATE AND PRESERVE ANY AND ALL UNDERGROUND UTILITIES. WHEN THE CONTRACTOR IS USING TRENCHLESS INSTALLATION METHODS, THE CONTRACTOR SHALL LOCATE ALL UTILITIES FOR THE ENTIRE LENGTH OF THE INSTALLATION PRIOR TO ANY ACTIVITIES.
2. ANY DISCREPANCIES FROM WHAT IS SHOWN SHALL BE BROUGHT TO THE ATTENTION OF THE ENGINEER PRIOR TO BEGINNING WORK.
3. ALL WATER LINES 12" AND SMALLER SHALL BE DUCTILE IRON CLASS 350, AND LINES GREATER THAN 12" SHALL BE DUCTILE IRON CLASS 250 AS DEFINED BY AWWA C151.
4. RESTRAIN PIPE JOINTS AND FITTINGS PER SPL WW-27A.

ALL BRANCH CONNECTION SHALL HAVE THE VALVE BOLTED TO THE MAIN BY METHODS OF FLANGE OR SWIVEL TEES. FOSTER ADAPTORS MAY BE USED IN LIEU OF FLANGE OR SWIVEL TEES WHEN CALLED OUT ON PLANS BY DESIGN ENGINEERS.

REVIEWED
MAR 0 5 2019
Austin Water Utility

EXISTING GRADE — 648.8
FLOW LINE OF PIPE — 643.79

PROFILE SCALE
1"=40' HORIZ.
1"=4' VERT.

REV. NO.	REVISION DESCRIPTION	APPROVED BY:	DATE

CobbFendley
TBPE NO. 274 / TBPLS NO. 10046701
505 EAST HUNTLAND DRIVE, SUITE 100
AUSTIN, TEXAS 78752
512.834.9798 | FAX 512.834.7727
WWW.COBBFENDLEY.COM

HOWARD LN WL
STA. 41+50 TO END
HOWARD LANE WATER MAIN EXTENSION
AUSTIN, TX

CITY OF AUSTIN
FOUNDED 1839

PROJ. NO. 1712-045-01
DESIGN: K. VAN HOOSIER
DRAWN: K. VAN HOOSIER
CHECK: L. PRINCE
APPR: L. PARISHER
DATE: OCTOBER 5, 2018

STATE OF TEXAS
JAMES, LANCE PARISHER
106221
LICENSED
PROFESSIONAL ENGINEER
10/5/2018

THESE DESIGN DOCUMENTS ARE NOT TO BE USED FOR CONSTRUCTION PRIOR TO REGULATORY SIGNATURE AND PERMIT.

SHEET
C-311
37 of 47

Dwg. Info: \\austinserver\common\CFA\2017\1204501_Howard_Lane_Water_Main\DESIGN\C-101-HowardLnPP.dwg – Tab: 41+50 TO END – Plotted: 2/21/2019 2:39 PM By: HEATHER BYRNE

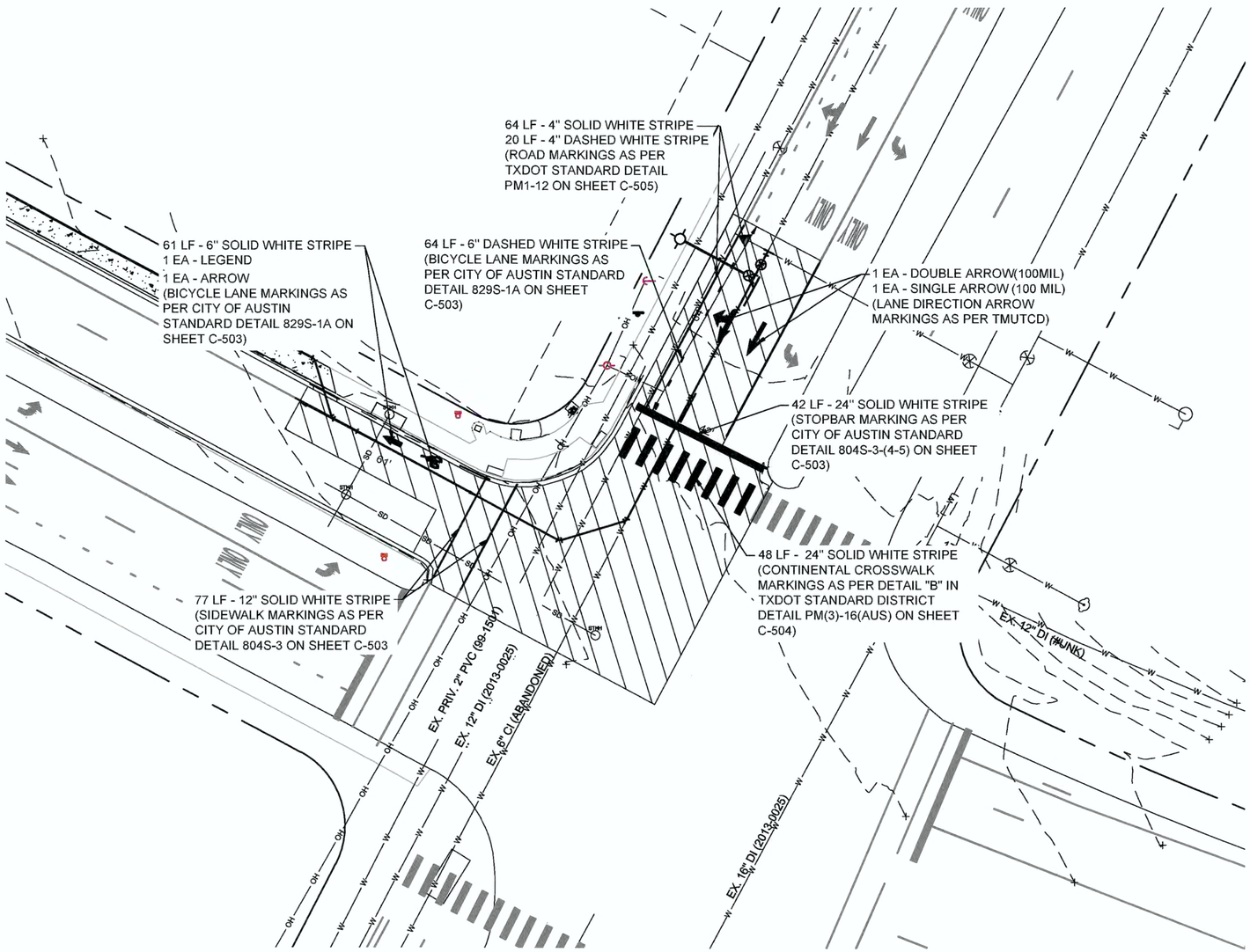

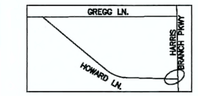

N.T.S.

N

0 20' 40'
SCALE: 1" = 20'

AWU GRID #Q31-2
AWU INT #27182

LEGEND

	PROP. WATER LINE
	PROP. ROW
	EXIST. ROW
	EASEMENT
	EXIST. E.O.P
	PROP. E.O.P
UT UT	EXIST. U.G. TELECOM
W W	EXIST. WATER LINE
WW WW	EXIST. WW LINE
SD SD	PROP. STORM DRAIN
G G	EXIST. GAS LINE
OE OE	EXIST. O.H. ELECTRIC
UE UE	EXIST. U.G. ELECTRIC
X X	WIRE FENCE
PROP. GV	PROP. FIRE HYDRANT
EXIST. GV	EXIST. FIRE HYDRANT
	PAVEMENT REPAIR

GENERAL NOTES:

1. THE LOCATIONS OF EXISTING UNDERGROUND UTILITIES ARE SHOWN IN AN APPROXIMATE WAY ONLY. THE CONTRACTOR SHALL DETERMINE THE EXACT LOCATION OF ALL EXISTING UTILITIES BEFORE COMMENCING WORK AND AGREES TO BE FULLY RESPONSIBLE FOR ANY AND ALL DAMAGES THAT MIGHT BE OCCASIONED BY THE FAILURE TO EXACTLY LOCATE AND PRESERVE ANY AND ALL UNDERGROUND UTILITIES. WHEN THE CONTRACTOR IS USING TRENCHLESS INSTALLATION METHODS, THE CONTRACTOR SHALL LOCATE ALL UTILITIES FOR THE ENTIRE LENGTH OF THE INSTALLATION PRIOR TO ANY ACTIVITIES.
2. ANY DISCREPANCIES FROM WHAT IS SHOWN SHALL BE BROUGHT TO THE ATTENTION OF THE ENGINEER PRIOR TO BEGINNING WORK.
3. ALL WATER LINES 12" AND SMALLER SHALL BE DUCTILE IRON CLASS 350, AND LINES GREATER THAN 12" SHALL BE DUCTILE IRON CLASS 250 AS DEFINED BY AWWA C151.
4. RESTRAIN PIPE JOINTS AND FITTINGS PER SPL WW-27A.

EXISTING GRADE
FLOW LINE OF PIPE

648.8
643.79

PROFILE SCALE
1"=40' HORIZ.
1"=4' VERT.

REV. NO.	REVISION DESCRIPTION	APPROVED BY:	DATE

CobbFendley
TBPE NO. 274 / TBPLS NO. 10046701
505 EAST HUNTLAND DRIVE, SUITE 100
AUSTIN, TEXAS 78752
512.834.9788 | FAX 512.834.7727
WWW.COBBFENDLEY.COM

RE-STRIPING

HOWARD LANE WATER MAIN EXTENSION
AUSTIN, TX

CITY OF AUSTIN FOUNDED 1839

PROJ. NO. 1712-045-01
DESIGN: K. VAN HOOSIER
DRAWN: K. VAN HOOSIER
CHECK: L. PRINCE
APPR: L. PARISHER
DATE: OCTOBER 5, 2018

STATE OF TEXAS
JAMES LANCE PARISHER
106221
LICENSED
PROFESSIONAL ENGINEER
10/5/2018

THESE DESIGN DOCUMENTS ARE NOT TO BE USED FOR CONSTRUCTION PRIOR TO REGULATORY SIGNATURE AND PERMIT

SHEET
C-312
38 of 47

Dwg Info: G:\CFA\2017\1204501_Howard_Lane_Water_Main\DESIGN\C-101-HowardLnPP.dwg – Tab: RE-STRIPING – Plotted: 10/5/2018 3:48 PM By: KRISTEN VAN HOOSIER

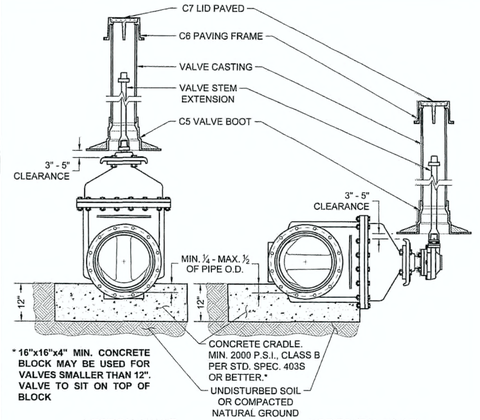

VERTICAL VALVE

HORIZONTAL VALVE

ONLY TO BE USED WHEN CALLED OUT ON THE DRAWINGS.

NOTES:

1. WELD SOCKET 2½" x 2" DEEP TO 1" SCH. 40 CARBON STEEL ROUND STEM EXTENSION, FITTED ON OPERATING NUT, [SCH. 80 FOR LENGTHS OVER 10'.]
2. VALVE CASTING SHALL BE 6" DI PIPE WITH BELL OR COLLAR CENTERED OVER VALVE BOOT.
3. NUT AT TOP OF VALVE EXTENSION ROD SHALL BE SQUARE 2" LONG WELDED TO TOP OF ROD.
4. VALVE STEM EXTENSIONS ARE REQUIRED ON ALL VALVES THAT EXCEED 3' DEEP FROM FINISHED GRADE. VALVE EXTENSIONS SHALL BE PLACED SUCH THAT THE EXTENSION NUT IS BETWEEN 12" AND 18" FROM FINISHED GRADE.

RECLAIMED WATER: ALL RECLAIMED PVC PIPE SHALL BE MANUFACTURED PURPLE PIPE. HDPE PIPE SHALL BE MANUFACTURED WITH PURPLE STRIPES. ALL OTHER PIPE AND APPURTENANCES SHALL BE MANUFACTURED PURPLE IF AVAILABLE. ALL PIPE AND FITTINGS THAT ARE NOT AVAILABLE FROM THE MANUFACTURER IN PURPLE SHALL BE PAINTED PURPLE PER SPL WW-3C. ALL BURIED DI AND CI PIPE AND FITTINGS SHALL ALSO BE WRAPPED IN PURPLE POLYETHYLENE PER SPL WW-27D. ALL COVERS SHALL HAVE "RECLAIMED WATER" CAST INTO THEM.

CITY OF AUSTIN AUSTIN WATER	TYPICAL GATE VALVE 4" - 16"	
Kathi L. Flowers 05/18/2016 ADOPTED	THE ARCHITECT/ENGINEER ASSUMES RESPONSIBILITY FOR APPROPRIATE USE OF THIS STANDARD.	STANDARD NO. 511-AW-01 1 OF 4

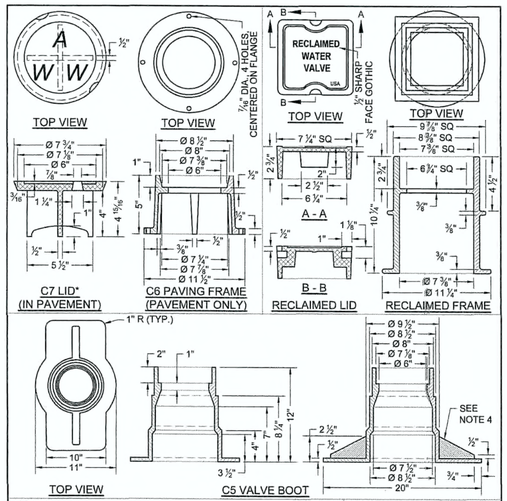

NOTES:

1. MATERIAL SHALL BE GRAY CAST IRON, ASTM A48, GRADE 30B.
2. THE MANUFACTURER'S IDENTIFICATION AND CASTING NUMBER, AND THE COUNTRY WHERE CAST, SHALL BE DISTINCTLY CAST ONTO EACH LID, FRAME, COLLAR AND BASE.
3. DRAFT AND SHRINKAGE ALLOWANCE SHALL BE IN ACCORDANCE WITH NORMAL FOUNDRY PRACTICE.
4. CASTING FINISH BY MANUFACTURER SHALL INCLUDE REMOVAL OF FINS AND FLASHING, AND PAINT WITH BLACK ASPHALT COATING.

WEIGHTS:

C7 LID: 13 LBS
RECLAIMED LID: 15 LBS
C6 FRAME: 23 LBS
RECLAIMED FRAME: 33 LBS
C5 BASE: 78 LBS

* LETTERING SHALL BE 1 ½"
2 PICK BAR SLOTS REQUIRED

CITY OF AUSTIN AUSTIN WATER	TYPICAL GATE VALVE 4" - 16"	
Kathi L. Flowers 05/18/2016 ADOPTED	THE ARCHITECT/ENGINEER ASSUMES RESPONSIBILITY FOR APPROPRIATE USE OF THIS STANDARD.	STANDARD NO. 511-AW-01 2 OF 4

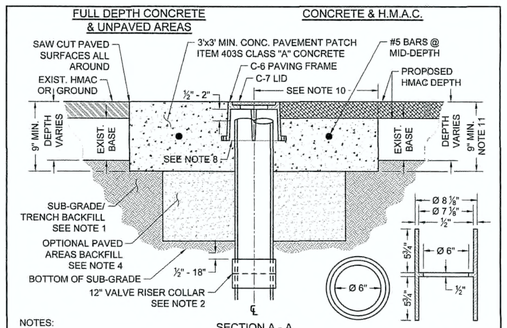

NOTES:

1. SUB-GRADE/TRENCH BACKFILL SHALL BE COMPACTED AS PER ITEM 201S, SUB-GRADE PREPARATION.
2. TO ADJUST VALVE CASTINGS TO FINAL GRADE, REMOVE RISER PIPE BELOW SUB-GRADE AND INSTALL APPROPRIATE LENGTH OF NEW RISER PIPE TO ACHIEVE FINAL GRADE. CONNECT THE TWO PIECES OF RISER PIPE WITH A 6" COLLAR MIN. 12" LENGTH APPROXIMATELY CENTERED ON THE JOINT WITH THE TOP OF SLEEVE LOCATED ½" - 18" BELOW SUB-GRADE. THE INSIDE "LIP" OF COLLAR TO BE PAINTED WITH FLUORESCENT WHITE PAINT OR COVERED WITH FLUORESCENT WHITE TAPE. ALTERNATE: FOR OPTIONAL SINGLE PIECE RISER INSTALLATION SEE SHEET 4 OF 4.
3. CLEAN VALVE BOX OF ALL DEBRIS DOWN TO THE NUT OF THE VALVE; NUT SHALL OPERATE WITH NO OBSTRUCTION.
4. WHERE CASTINGS TO BE REMOVED REQUIRE EXCAVATION GREATER THAN 20" DEEP, CONTRACTOR MAY ELECT TO FILL EXCAVATION WITH CONTROLLED LOW STRENGTH MATERIAL (SPEC. ITEM 402S) TO THE UNDERSIDE OF THE CONCRETE. PAVEMENT PATCH IN LIEU OF COMPACTED BACKFILL.
5. REINFORCING STEEL SHALL MEET SPEC. ITEM 406S.7.
6. NO MORE THAN 2 SECTIONS OF PIPE SHALL BE USED FROM VALVE TO FINAL GRADE.
7. BELL AND SPIGOT IS ACCEPTABLE FOR DEPTH OVER 18'.

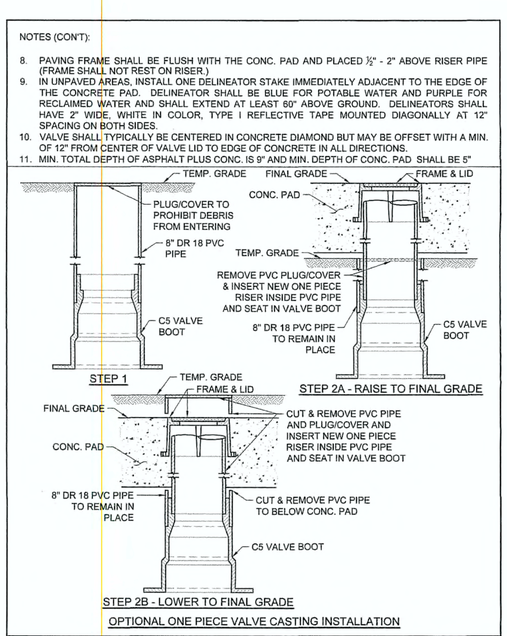

OPTIONAL ONE PIECE VALVE CASTING INSTALLATION

CITY OF AUSTIN AUSTIN WATER	TYPICAL GATE VALVE 4" - 16"	
Kathi L. Flowers 05/18/2016 ADOPTED	THE ARCHITECT/ENGINEER ASSUMES RESPONSIBILITY FOR APPROPRIATE USE OF THIS STANDARD.	STANDARD NO. 511-AW-01 3 OF 4

NOTES (CON'T):

8. PAVING FRAME SHALL BE FLUSH WITH THE CONC. PAD AND PLACED ½" - 2" ABOVE RISER PIPE (FRAME SHALL NOT REST ON RISER.)
9. IN UNPAVED AREAS, INSTALL ONE DELINEATOR STAKE IMMEDIATELY ADJACENT TO THE EDGE OF THE CONCRETE PAD. DELINEATOR SHALL BE BLUE FOR POTABLE WATER AND PURPLE FOR RECLAIMED WATER AND SHALL EXTEND AT LEAST 60" ABOVE GROUND. DELINEATORS SHALL HAVE 2" WIDE, WHITE IN COLOR, TYPE I REFLECTIVE TAPE MOUNTED DIAGONALLY AT 12" SPACING ON BOTH SIDES.
10. VALVE SHALL TYPICALLY BE CENTERED IN CONCRETE DIAMOND BUT MAY BE OFFSET WITH A MIN. OF 12" FROM CENTER OF VALVE LID TO EDGE OF CONCRETE IN ALL DIRECTIONS.
11. MIN. TOTAL DEPTH OF ASPHALT PLUS CONC. IS 9" AND MIN. DEPTH OF CONC. PAD SHALL BE 5"

CITY OF AUSTIN AUSTIN WATER	TYPICAL GATE VALVE 4" - 16"	
Kathi L. Flowers 05/18/2016 ADOPTED	THE ARCHITECT/ENGINEER ASSUMES RESPONSIBILITY FOR APPROPRIATE USE OF THIS STANDARD.	STANDARD NO. 511-AW-01 4 OF 4

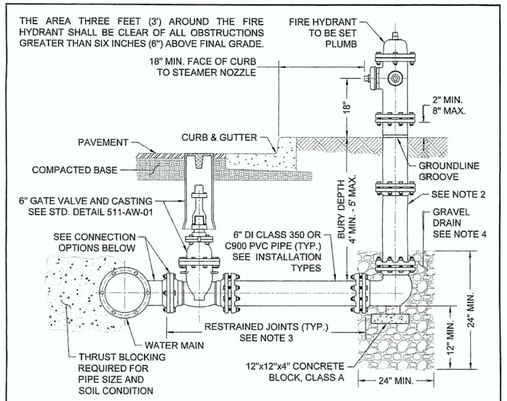

CONNECTION TO MAIN

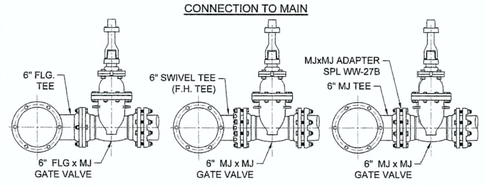

OPTION 1 OPTION 2 OPTION 3

CITY OF AUSTIN AUSTIN WATER	FIRE HYDRANT	
Kathi L. Flowers 05/18/2016 ADOPTED	THE ARCHITECT/ENGINEER ASSUMES RESPONSIBILITY FOR APPROPRIATE USE OF THIS STANDARD.	STANDARD NO. 511-AW-02 1 OF 3

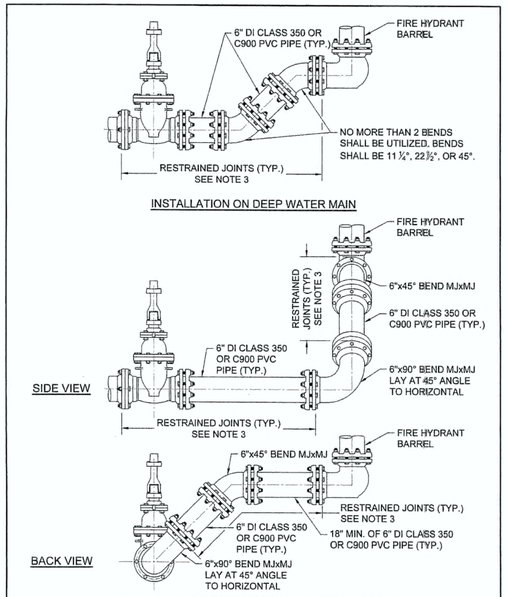

CITY OF AUSTIN AUSTIN WATER	FIRE HYDRANT	
Kathi L. Flowers 05/18/2016 ADOPTED	THE ARCHITECT/ENGINEER ASSUMES RESPONSIBILITY FOR APPROPRIATE USE OF THIS STANDARD.	STANDARD NO. 511-AW-02 2 OF 3

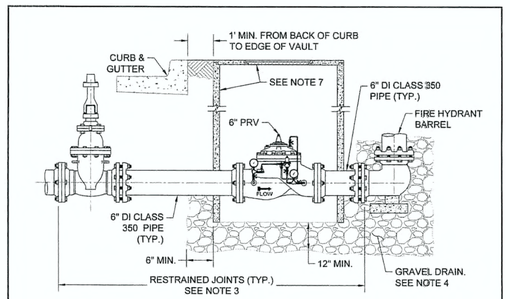

INSTALLATION ON WATER MAIN WITH PRESSURE REDUCING VALVE (PRV)

NOTES: APPLICABLE TO ALL INSTALLATION TYPES.

1. NO PART OF A HYDRANT OR ITS NOZZLE CAPS SHALL BE WITHIN 6" OF ANY SIDEWALK OR PEDESTRIAN RAMP. ANY FIRE HYDRANT PLACED NEAR A STREET CORNER SHALL BE LOCATED OUTSIDE THE CURVE RADIUS AND A MINIMUM OF 4' FROM RAMPS.
2. ONE BARREL EXTENSION NOT EXCEEDING 2' LENGTH MAY BE INSTALLED DIRECTLY BELOW THE FIRE HYDRANT IN ORDER TO MEET THE REQUIRED BURY DEPTH OF 4' - 5'. BREAK AWAY BOLTS (SHOE TYPES) SHALL BE PROPERLY SPACED AND PLACED.
3. FIRE LINE SHALL HAVE ALL JOINTS RESTRAINED FROM MAIN TO FIRE HYDRANT. JOINTS SHOWN MAY VARY. SEE SPL WW-27, WW-27A, AND WW-27B FOR RESTRAINT OPTIONS.
4. BELOW EACH HYDRANT, A DRAINAGE PIT 24" IN DIAMETER AND 12" DEEP SHALL BE EXCAVATED AND FILLED WITH COMPACTED COARSE GRAVEL OR BROKEN STONE MIXED WITH COARSE SAND UNDER AND AROUND THE BOWL OF THE HYDRANT, AND TO A LEVEL 12" ABOVE THE HYDRANT DRAIN OPENING (SEE STD. SPEC. 510). THE HYDRANT DRAINAGE PIT SHALL NOT BE CONNECTED TO A SANITARY SEWER. THE DRAIN GRAVEL SHALL BE COVERED WITH FILTER FABRIC PER STD. SPEC. 620S. FOR PRV, GRAVEL SHALL EXTEND UNDER THE PRV VAULT 12" MIN. DEPTH UNDER THE VAULT AND 6" MIN. BEYOND VAULT.
5. FOR FIRE HYDRANT LEADS AT A MAIN OUTLET LARGER THAN 6" DIAMETER, OUTLET SHALL BE FLANGED AND A FLG x FLG REDUCER SHALL BE INSTALLED DIRECTLY ON THE OUTLET.
6. WRAP 8 MIL. POLY-FILM WRAP ON ALL BURIED PIPE AND FITTINGS.
7. FOR HYDRANTS WITH PRV: CLASS III RCP VAULT 60" MIN. I.D. WITH REINFORGED PRECAST CONCRETE LID (AASHTO H-20 LOADING) WITH COA FRAME AND 32" COVER WITH LETTERING MODIFIED FOR WATER.

CITY OF AUSTIN AUSTIN WATER	FIRE HYDRANT	
Kathi L. Flowers 05/18/2016 ADOPTED	THE ARCHITECT/ENGINEER ASSUMES RESPONSIBILITY FOR APPROPRIATE USE OF THIS STANDARD.	STANDARD NO. 511-AW-02 3 OF 3

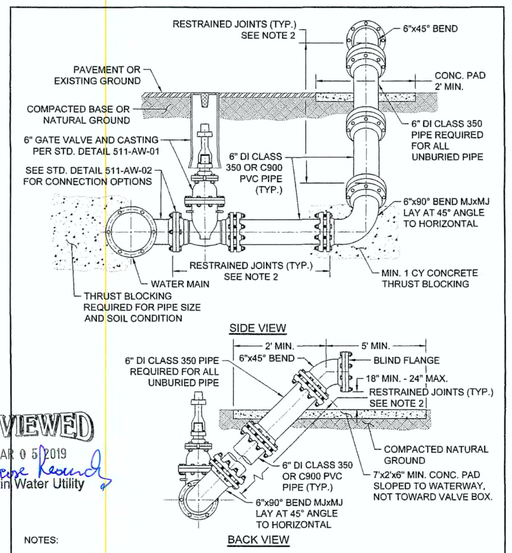

REVIEWED
MAR 0 5 2019
Austin Water Utility

NOTES:

1. WRAP 8 MIL. POLY-FILM WRAP ON ALL BURIED PIPE AND FITTINGS.
2. PROVIDE RESTRAINED JOINTS FOR ALL JOINTS PER SPL WW-27A. FLGxFLG JOINTS ARE ACCEPTABLE FROM 90° BEND TO BLIND FLANGE.
3. EXTERIOR SURFACES OF EXPOSED PIPE SHALL BE PAINTED PER SPL WW-3C. POTABLE WATER PIPE SHALL BE PAINTED SAFETY BLUE.

CITY OF AUSTIN AUSTIN WATER	DRAIN VALVE	
Kathi L. Flowers 05/18/2016 ADOPTED	THE ARCHITECT/ENGINEER ASSUMES RESPONSIBILITY FOR APPROPRIATE USE OF THIS STANDARD.	STANDARD NO. 511-AW-03 1 OF 1

REV. NO.	REVISION DESCRIPTION	APPROVED BY:	DATE

CobbFendley
TBPE NO. 274 / TBPLS NO. 10046701
505 EAST HUNTLAND DRIVE, SUITE 100
AUSTIN, TEXAS 78752
512.836.1555 FAX: 512.836.7727
WWW.COBBFENDLEY.COM

STANDARD DETAILS - SHEET 1

HOWARD LANE WATER MAIN EXTENSION
AUSTIN, TX

CITY OF AUSTIN FOUNDED 1839

PROJ. NO. 1712-045-01
DESIGN: K. VAN HOOSIER
DRAWN: K. VAN HOOSIER
CHECK: L. PRINCE
APPR: L. PARISHER
DATE: OCTOBER 5, 2018

STATE OF TEXAS
JAMES LANCE PARISHER
106221
LICENSED
PROFESSIONAL ENGINEER
10/5/2018

THESE DESIGN DOCUMENTS ARE NOT TO BE USED FOR CONSTRUCTION PRIOR TO REGULATORY SIGNATURE AND PERMIT.

SHEET
C-500
39 of 47

Dwg Info: G:\CFA\2017\1204501_Howard_Lane_Water_Main\DESIGN\C-501-DETL-COA.dwg – Tab: DETL-01 – Plotted: 10/5/2018 3:48 PM By: KRISTEN VAN HOOSIER

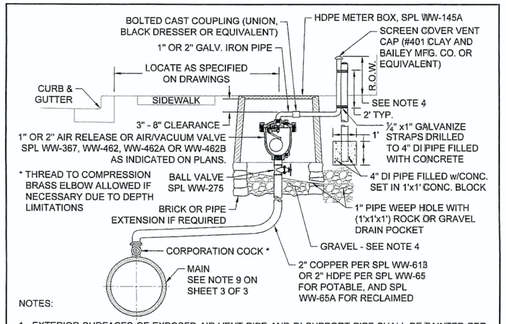

NOTES:

1. EXTERIOR SURFACES OF EXPOSED AIR VENT PIPE AND DI SUPPORT PIPE SHALL BE PAINTED PER SPL WW-3C. POTABLE WATER PIPE SHALL BE PAINTED SAFETY BLUE.
2. AIR VENT PIPE INSTALLATION SHALL BE AS NEAR AS PRACTICAL TO RIGHT-OF-WAY LINE WITH MINIMUM CLEARANCE OF 18" FROM ANY OBSTACLE.
3. HDPE METER BOX PENETRATION SHALL BE CORE BIT DRILLED. VOID SHALL BE FILLED WITH LINKSEAL LS 300 OR APPROVED EQUAL.
4. COMPACTED COARSE GRAVEL OR BROKEN STONE MIXED WITH SAND SLOPED TO DRAIN.
5. IN UNDEVELOPED AREAS, THE AIR VENT PIPE SHALL BE 4' MIN. IN HEIGHT SUPPORTED BY A 4" DIA. DI PIPE WHICH HAS BEEN FILLED WITH CONCRETE (SUPPORT PIPE SHALL BE 6' LONG, BURIED IN CLASS A CONCRETE OR CLSM 3' BELOW FINAL GRADE AND EXTENDING 3' ABOVE FINAL GRADE). INSTALL ONE DELINEATOR STAKE WITHIN 3' OF THE VAULT ON THE VEHICULAR ACCESS SIDE OF VAULT OR AS DIRECTED BY AUSTIN WATER. DELINEATOR SHALL BE BLUE FOR POTABLE WATER AND SHALL EXTEND AT LEAST 60" ABOVE GROUND. DELINEATORS SHALL HAVE 2" WIDE, WHITE IN COLOR, TYPE I REFLECTIVE TAPE MOUNTED DIAGONALLY AT 12" SPACING ON BOTH SIDES. IN DEVELOPED AREAS, THE AIR VENT PIPE SHALL BE 8" - 12" IN HEIGHT AND LOCATED NOT TO CONFLICT WITH SIDEWALK, DRIVEWAY, OR OTHER PEDESTRIAN TRAFFIC.
6. THE AIR VALVE AND ASSOCIATED PIPING SHALL BE INSTALLED ABOVE THE HIGHEST ELEVATION OF THE WATER MAIN. AIR VALVE PIPING, FROM THE WATER MAIN TO THE AIR VALVE, SHALL MAINTAIN A CONSTANT RISE, WITH NO DIPS, TO THE TOP OF THE GROUND.

1" - 2" AIR RELEASE OR AIR/VACUUM VALVE INSTALLATION - TYPE I

RECLAIMED WATER: ALL RECLAIMED PVC PIPE SHALL BE MANUFACTURED PURPLE PIPE. HDPE PIPE SHALL BE MANUFACTURED WITH PURPLE STRIPES. ALL OTHER PIPE AND APPURTENANCES SHALL BE MANUFACTURED PURPLE IF AVAILABLE. ALL PIPE AND FITTINGS THAT ARE NOT AVAILABLE FROM THE MANUFACTURER IN PURPLE SHALL BE PAINTED PURPLE PER SPL WW-3C. ALL BURIED DI AND CI PIPE AND FITTINGS SHALL ALSO BE WRAPPED IN PURPLE POLYETHYLENE PER SPL WW-27D. ALL COVERS SHALL HAVE "RECLAIMED WATER" CAST INTO THEM.

CITY OF AUSTIN AUSTIN WATER	AIR RELEASE AND AIR/VACUUM VALVE	
Kathi L. Flowers 05/18/2016 ADOPTED	THE ARCHITECT/ENGINEER ASSUMES RESPONSIBILITY FOR APPROPRIATE USE OF THIS STANDARD.	STANDARD NO. 511-AW-04 1 OF 3

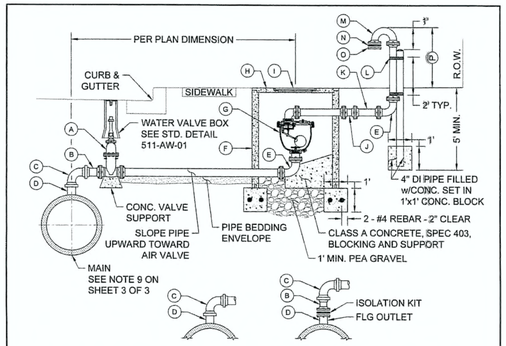

DI MAIN STEEL/CSC MAIN

A. GATE VALVE (FLG x FLG). GATE VALVE SHALL NOT BE INSTALLED DIRECTLY ABOVE WATER MAIN.
B. PIPE FLG x FACTORY RESTRAINED JOINT SPIGOT END.
C. 90° BEND w/FACTORY RESTRAINED JOINT BELL ENDS, SPL WW-27F.
D. FOR AIR VENT: WELDED-ON OUTLET w/FACTORY RESTRAINED JOINT SPIGOT END.
FOR STEEL/CSC MAIN: WELDED-ON FLANGED OUTLET w/ISOLATION KIT AND FLG x FACTORY RESTRAINED SPIGOT END.
E. 90° BEND (FLG x FLG).
F. CLASS III RCP VAULT 60" MIN. I.D.
G. AIR RELEASE VALVE w/GOOSENECK PER AIR RELEASE VALVES FOR WATER SPL WW-367 OR AIR RELEASE/VACUUM RELIEF VALVES FOR POTABLE WATER SPL WW-462A OR AIR RELEASE/VACUUM RELIEF VALVES FOR RECLAIMED WATER SPL WW-462B OR AIR RELEASE/AIR VACUUM VALVE FOR WASTEWATER SPL WW-462B.
H. REINFORCED PRECAST CONCRETE LID (AASHTO H-20 LOADING).
I. COA FRAME AND 32" COVER WITH LETTERING MODIFIED FOR WATER.
J. BOLTED CAST COUPLING (SMITH-BLAIR 441 OMNI CAST COUPLING OR APPROVED EQUAL).
K. AIR VENT PIPE, 3" PIPE - GALVANIZED IRON, 4" AND LARGER PIPE - DI ONLY.
L. ¼" x1" GALVANIZE STRAPS DRILLED TO 4" DI PIPE FILLED w/CONCRETE (SEE NOTE 7).
M. RETURN BEND (FLG x FLG).
N. No. 16 MESH BRASS CLOTH
O. COMPANION FLANGE (SEE NOTE 5).
P. 4' MIN. - UNDEVELOPED AREAS.

3" OR LARGER AIR/VACUUM VALVE INSTALLATION - TYPE II

CITY OF AUSTIN AUSTIN WATER	AIR RELEASE AND AIR/VACUUM VALVE	
Kathi L. Flowers 05/18/2016 ADOPTED	THE ARCHITECT/ENGINEER ASSUMES RESPONSIBILITY FOR APPROPRIATE USE OF THIS STANDARD.	STANDARD NO. 511-AW-04 2 OF 3

NOTES:

1. ON 10" AND LARGER TWO PIECE COMBINATION AIR VALVES, THE OUTLET PIPING OF THE SMALL VALVE SHALL BE VENTED WITHIN THE VAULT INTO THE LARGER VENT PIPE
2. AIR VENT PIPE 6" AND LARGER SHALL BE DI (CLASS 350 MIN.) PIPE FLANGE FITTINGS AND EXTERIOR SURFACES OF ALL EXPOSED PIPE SHALL BE PAINTED PER SPL WW-3C. POTABLE WATER PIPE SHALL BE PAINTED SAFETY BLUE. SURFACE PREPARATION SHALL BE PER PAINT MANUFACTURER'S REQUIREMENTS.
3. ENTIRE AIR VENT ASSEMBLY SHALL BE LOCATED WITHIN EASEMENT OR R.O.W.
4. CONCRETE PIPE PENETRATIONS SHALL BE CORE BIT DRILLED. VOID SHALL BE SEALED w/LINKSEAL LS 300 OR APPROVED EQUAL.
5. CROSS SECTIONAL AREA OF OPENING TO BE EQUAL TO OR GREATER THAN CROSS SECTIONAL AREA OF AIR VENT PIPE.
6. AIR/VACUUM VALVE SHALL BE INSTALLED IN A MANNER WHICH WILL ALLOW REMOVAL OF ASSEMBLY WITHOUT REMOVAL OF PRECAST CONCRETE LID.
7. IN UNDEVELOPED AREAS, THE AIR VENT PIPE SHALL BE 4' MIN. IN HEIGHT SUPPORTED BY A 4" DIA. DI PIPE WHICH HAS BEEN FILLED WITH CONCRETE (SUPPORT PIPE SHALL BE 6' LONG, BURIED IN CLASS A CONCRETE OR CLSM 3' BELOW FINAL GRADE AND EXTENDING 3' ABOVE FINAL GRADE). INSTALL ONE DELINEATOR STAKE WITHIN 3' OF THE VAULT ON THE VEHICULAR ACCESS SIDE OF VAULT OR AS DIRECTED BY AUSTIN WATER. DELINEATOR SHALL BE BLUE FOR POTABLE WATER AND SHALL EXTEND AT LEAST 60" ABOVE GROUND. DELINEATORS SHALL HAVE 2" WIDE, WHITE IN COLOR, TYPE I REFLECTIVE TAPE MOUNTED DIAGONALLY AT 12" SPACING ON BOTH SIDES. IN DEVELOPED AREAS, THE AIR VENT PIPE SHALL BE LOCATED NOT TO CONFLICT WITH SIDEWALK, DRIVEWAY, OR OTHER PEDESTRIAN TRAFFIC.
8. GATE VALVE, PIPE, AND FITTINGS FROM MAIN TO ARV SHALL BE OF EQUAL DIAMETER AS THE AIR VALVE EXCEPT 3" ARV SHALL HAVE 4" FITTINGS AND A 4"x3" REDUCER AT THE ARV, AND ALL PIPE AND FITTINGS ON THE OUTLET SIDE OF THE ARV SHALL BE EQUAL TO THE SIZE OF THE OUTLET OF THE ARV. VAULTS SHALL BE 5' DIAMETER FOR 3" VALVE; 6' DIAMETER FOR 4", 6", AND 8" VALVES; AND 7' DIAMETER FOR 10" AND 12" VALVES.
9. FOR 24" AND LARGER MAINS, AN 18" OUTLET WITH BLIND FLANGE SHALL BE INSTALLED AT CONNECTION OF ARV.

3" OR LARGER AIR/VACUUM VALVE INSTALLATION - TYPE II

RECLAIMED WATER: ALL RECLAIMED PVC PIPE SHALL BE MANUFACTURED PURPLE PIPE. HDPE PIPE SHALL BE MANUFACTURED WITH PURPLE STRIPES. ALL OTHER PIPE AND APPURTENANCES SHALL BE MANUFACTURED PURPLE IF AVAILABLE. ALL PIPE AND FITTINGS THAT ARE NOT AVAILABLE FROM THE MANUFACTURER IN PURPLE SHALL BE PAINTED PURPLE PER SPL WW-3C. ALL BURIED DI AND CI PIPE AND FITTINGS SHALL ALSO BE WRAPPED IN PURPLE POLYETHYLENE PER SPL WW-27D. ALL COVERS SHALL HAVE "RECLAIMED WATER" CAST INTO THEM.

CITY OF AUSTIN AUSTIN WATER	AIR RELEASE AND AIR/VACUUM VALVE	
Kathi L. Flowers 05/18/2016 ADOPTED	THE ARCHITECT/ENGINEER ASSUMES RESPONSIBILITY FOR APPROPRIATE USE OF THIS STANDARD.	STANDARD NO. 511-AW-04 3 OF 3

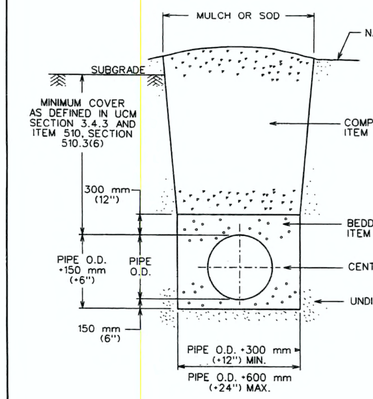

REFERENCES:

1. UTILITY CRITERIA MANUAL SECTION 3.4.3, "FINAL DESIGN"
2. STANDARD SPECIFICATION MANUAL ITEM 510,
   SECTION 510.2(6), "SELECT BACKFILL OR BORROW";
   SECTION 510.3(6), "TRENCH DEPTH AND DEPTH OF COVER";
   SECTION 510.3(14), "PIPE BEDDING ENVELOPE"

CITY OF AUSTIN DEPARTMENT OF PUBLIC WORKS	TYPICAL TRENCH DETAIL WITH UNFINISHED SURFACE	
Bill Gardner 3/13/06 ADOPTED	THE ARCHITECT/ENGINEER ASSUMES RESPONSIBILITY FOR APPROPRIATE USE OF THIS STANDARD.	STANDARD NO. 510S-5

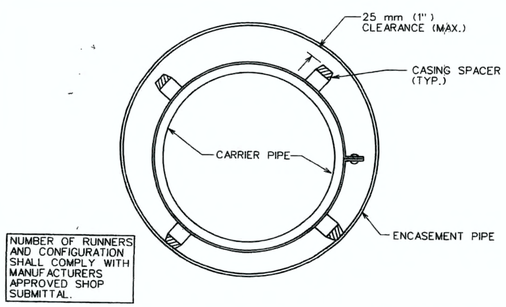

NUMBER OF RUNNERS AND CONFIGURATION SHALL COMPLY WITH MANUFACTURERS APPROVED SHOP SUBMITTAL.

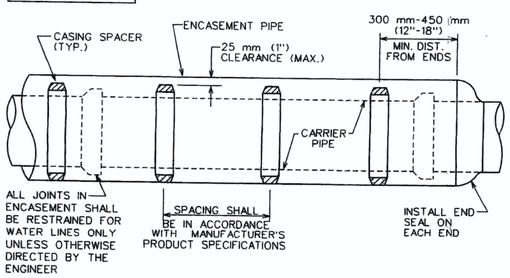

APPLICABLE REFERENCES

STANDARD SPECIFICATION: ITEM 510S.3 (19) W/WW STANDARD PRODUCTS LIST: SPLWW-575 FOR CASING SPACER AND SPLWW-575A FOR END SEAL.

CITY OF AUSTIN AUSTIN WATER UTILITY	ENCASEMENT DETAIL W/ CASING SPACERS	
Kathi L. Flowers 2/22/06 ADOPTED	THE ARCHITECT/ENGINEER ASSUMES RESPONSIBILITY FOR APPROPRIATE USE OF THIS STANDARD.	STANDARD NO. 501S-1

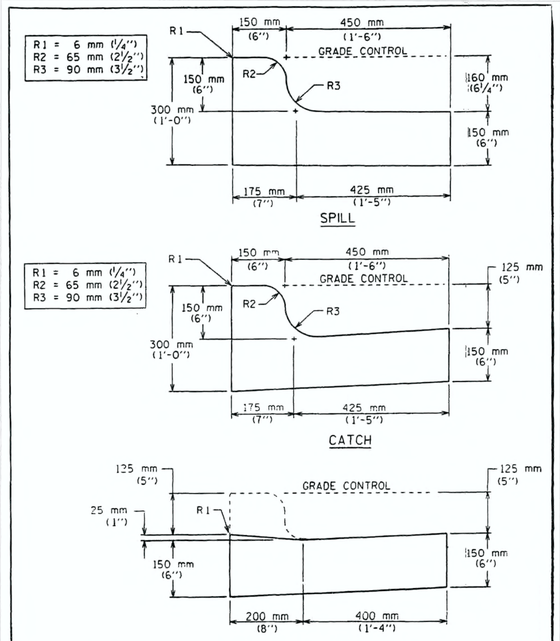

CITY OF AUSTIN DEPARTMENT OF PUBLIC WORKS AND TRANSPORTATION	CURB AND GUTTER SECTION	
Luis Rivera 9/29/99 ADOPTED	THE ARCHITECT/ENGINEER ASSUMES RESPONSIBILITY FOR APPROPRIATE USE OF THIS STANDARD.	STANDARD NO. 430S-1

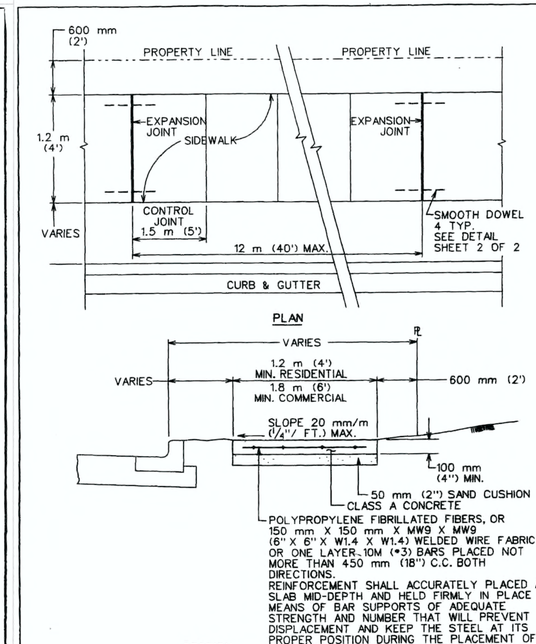

CITY OF AUSTIN DEPARTMENT OF PUBLIC WORKS	SIDEWALK	
Bill Gardner 3/26/08 ADOPTED	THE ARCHITECT/ENGINEER ASSUMES RESPONSIBILITY FOR APPROPRIATE USE OF THIS STANDARD.	STANDARD NO. 432S-1 1 OF 3

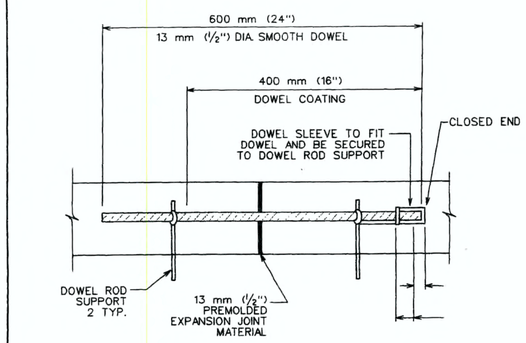

DOWEL DETAIL

REVIEWED
MAR 0 5 2019
Austin Water Utility

CITY OF AUSTIN DEPARTMENT OF PUBLIC WORKS	SIDEWALK	
Bill Gardner 3/26/08 ADOPTED	THE ARCHITECT/ENGINEER ASSUMES RESPONSIBILITY FOR APPROPRIATE USE OF THIS STANDARD.	STANDARD NO. 432S-1 2 OF 3

REV. NO.	REVISION DESCRIPTION	APPROVED BY:	DATE

CobbFendley
TBPE NO. 274 / TBPLS NO. 10046701
505 EAST HUNTLAND DRIVE, SUITE 100
AUSTIN, TEXAS 78752-3755
512.834.9788 | FAX 512.834.7727
WWW.COBBFENDLEY.COM

STANDARD DETAILS - SHEET 2

HOWARD LANE WATER MAIN EXTENSION
AUSTIN, TX

PROJ. NO. 1712-045-01
DESIGN: K. VAN HOOSIER
DRAWN: K. VAN HOOSIER
CHECK: L. PRINCE
APPR: L. PARISHER
DATE: OCTOBER 5, 2018

STATE OF TEXAS
JAMES LANCE PARISHER
106221
LICENSED
PROFESSIONAL ENGINEER
10/5/2018

THESE DESIGN DOCUMENTS ARE NOT TO BE USED FOR CONSTRUCTION PRIOR TO REGULATORY SIGNATURE AND PERMIT.

SHEET
C-501
40 of 47

Dwg Info: G:\CFA\2017\1204501_Howard_Lane_Water_Main\DESIGN\C-501-DETL-COA.dwg - Tab: DETL-02 - Plotted: 10/5/2018 3:49 PM By: KRISTEN VAN HOOSIER

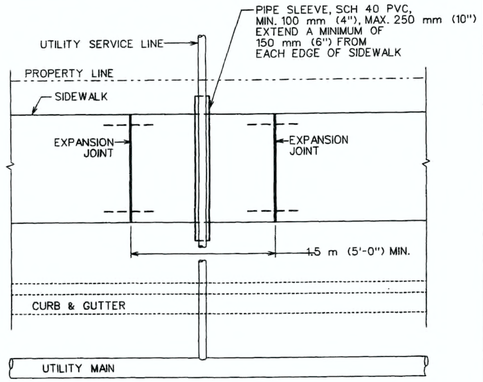

SIDEWALK OVER UTILITY SERVICE LINE PLAN

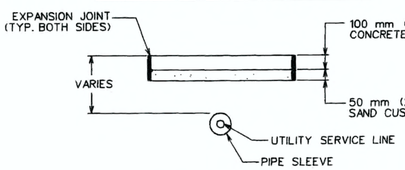

SECTION OF SIDEWALK OVER UTILITY SERVICE LINES

NOTES:
1. THIS STANDARD APPLIES TO THE INSTALLATION OF NEW UTILITIES OR UTILITIES BEING REPLACED BY A NEW LINE.
2. NO JOINTS IN UTILITY SERVICE PIPE TO BE LOCATED INSIDE PVC PIPE SLEEVE.

CITY OF AUSTIN DEPARTMENT OF PUBLIC WORKS	SIDEWALK	
Bill Gardner 3/26/08 ADOPTED	THE ARCHITECT/ENGINEER ASSUMES RESPONSIBILITY FOR APPROPRIATE USE OF THIS STANDARD.	STANDARD NO. 432S-1 3 OF 3

TRENCH REPAIR IN ASPHALTIC SURFACE OVER FLEXIBLE BASE
(UCM SECTION 5.8.0)

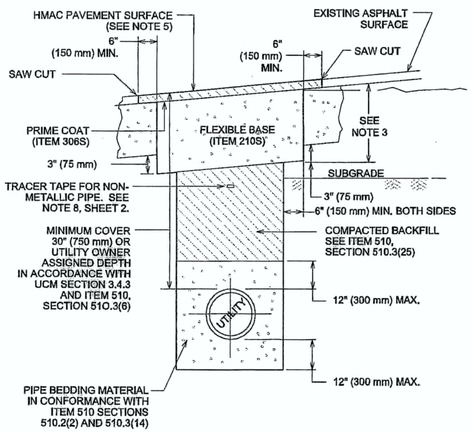

CITY OF AUSTIN DEPARTMENT OF PUBLIC WORKS	FLEXIBLE BASE WITH ASPHALT SURFACE TRENCH REPAIR-EXISTING PAVEMENT	
Kris Sanchez-Gray 1/4/11 ADOPTED	THE ARCHITECT/ENGINEER ASSUMES RESPONSIBILITY FOR APPROPRIATE USE OF THIS STANDARD.	STANDARD NO. 1100S-2 1 OF 2

NOTES:
1. THE EXISTING PAVING SURFACE SHALL BE SAW CUT IN A STRAIGHT LINE, A MINIMUM OF 12" (300 mm) WIDER THAN UNDISTURBED SIDES OF THE TRENCH AND SYMMETRICAL ABOUT THE CENTER LINE OF THE EXCAVATION.
2. IF EXCAVATION AREA IS OPEN FOR TEMPORARY PUBLIC USE, THE SURFACE SHALL BE MAINTAINED LEVEL WITH ADJACENT RIDING SURFACE WITH COLD MIX AC OR TEMPORARY HMAC. TEMPORARY MIX SHALL BE PLACED OVER FLEXIBLE BASE.
3. ROAD BASE SHALL BE REPLACED IN KIND WITH BASE THICKNESS EQUAL TO EXISTING BASE THICKNESS PLUS 3" (75 mm), BUT IN NO CASE LESS THAN 12" (300 mm).
4. DAMAGED PAVEMENT OUTSIDE THE TRENCH CUT SHALL BE REMOVED AND REPLACED WITH A BASE THICKNESS OF 10" (250 mm) OR A THICKNESS MATCHING EXISTING, WHICHEVER IS GREATER.
5. REPLACEMENT AC SURFACE LAYER SHALL BE OF THE TYPE AND THICKNESS BASED ON FUNCTIONAL CLASSIFICATION.
   a) MIN. 2" (50 mm) HMAC TYPE "D" FOR TRENCH REPAIR IN LOCAL/RESIDENTIAL STREETS.
   b) MIN. 3" (75 mm) HMAC TYPE "C" FOR TRENCH REPAIR IN COLLECTOR/ARTERIAL STREETS.
   SEE ITEM 340S, SECTION 340S.4.
6. CLASS "J" PC CONCRETE (ITEM 403S) OR CONTROLLED LOW STRENGTH MATERIAL (CLSM) MAY BE SUBSTITUTED IN THESE REPAIRS FOR THE FLEXIBLE BASE AND COMPACTED BACKFILL. PC CONCRETE GREATER THAN A 2 SACK MIX WILL NOT BE ALLOWED.
7. TACK COAT ALL EXPOSED EDGES AND SURFACES (SPEC ITEM 307S).
8. AS PER CITY OF AUSTIN STANDARD SPECIFICATION 510, SECTION 510.2(8)(K)5, FOR ALL NON-METALLIC PIPE, DIRECTLY ABOVE THE CENTERLINE OF THE PIPE AND A MINIMUM OF 12" (300 mm) BELOW THE SUBGRADE, OR A MINIMUM OF 18" (450 mm) BELOW FINISHED GRADE ON AREAS OUTSIDE THE LIMITS OF PAVEMENT, SHALL BE PLACED INDUCTIVE TRACER TAPE IN ACCORDANCE WITH THE MANUFACTURER'S REQUIREMENTS. THE TAPE SHALL BE ENCASED IN A PROTECTIVE, INERT, PLASTIC JACKET AND COLOR CODED IN ACCORDANCE WITH APWA UNIFORM COLOR CODE.

CITY OF AUSTIN DEPARTMENT OF PUBLIC WORKS	FLEXIBLE BASE WITH ASPHALT SURFACE TRENCH REPAIR-EXISTING PAVEMENT	
Kris Sanchez-Gray 1/4/11 ADOPTED	THE ARCHITECT/ENGINEER ASSUMES RESPONSIBILITY FOR APPROPRIATE USE OF THIS STANDARD.	STANDARD NO. 1100S-2 2 OF 2

REPAIR OF NEW STREETS and ARTERIAL STREETS in GOOD CONDITION
(UCM SECTION 5.3.3 and 5.3.4)

TYPICAL RESTORATION FOR EXCAVATION IN INTERSECTIONS

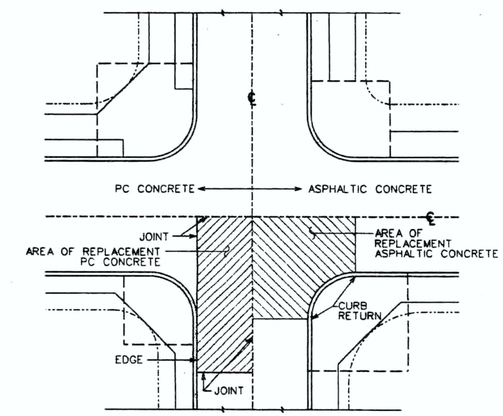

TYPICAL PLAN

TRENCH REPAIRS WITHIN PORTLAND CEMENT CONCRETE PAVEMENTS NOTE:
IF ANY PART OF THE TRENCH REPAIR FALLS WITHIN AN INTERSECTION, THEN THE ENTIRE CONCRETE SLAB FROM JOINT TO JOINT AND JOINT TO EDGE SHALL BE REPLACED, UNLESS OTHERWISE DIRECTED IN WRITING BY THE DIRECTOR.

TRENCH REPAIRS WITHIN ASPHALTIC CONCRETE PAVEMENTS NOTES:
1. IF ANY PART OF THE TRENCH REPAIR FALLS WITHIN AN INTERSECTION, DEFINED FROM CURB RETURN TO CURB RETURN, THE ENTIRE QUADRANT OF THE EXISTING SURFACE SHALL BE REPLACED, UNLESS OTHERWISE DIRECTED IN WRITING BY THE ENGINEER OR DESIGNATED REPRESENTATIVE.
2. A QUADRANT IS DEFINED AS THE CROSS-HATCHED AREA IN THE ABOVE DETAIL.

CITY OF AUSTIN DEPARTMENT OF PUBLIC WORKS	STREET REPAIR REQUIREMENTS	
Bill Gardner 9/14/05 ADOPTED	THE ARCHITECT/ENGINEER ASSUMES RESPONSIBILITY FOR APPROPRIATE USE OF THIS STANDARD.	STANDARD NO. 1100S-7 1 OF 3

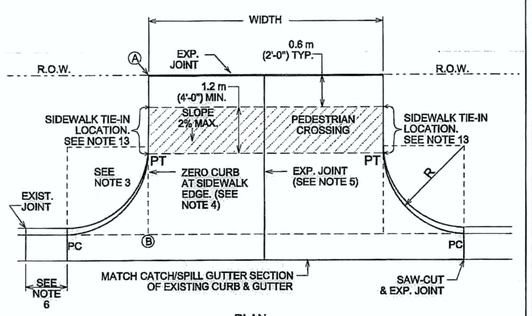

PLAN

NOTE: ALL DRIVEWAYS SHALL BE SLOPED TOWARDS THE STREET FROM THE R.O.W. LINE. ELEVATION OF POINT (A) ABOVE POINT (B) IS, TYPICALLY A MINIMUM OF 150 mm (6") PLUS 20 mm/m ($\frac{1}{4}$" RISE/FOOT) OVER DISTANCE "X" IN METERS (FEET).

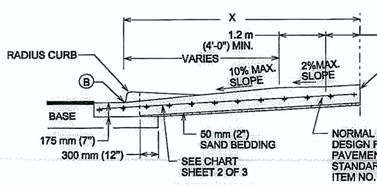

CROSS SECTION

CITY OF AUSTIN DEPARTMENT OF PUBLIC WORKS	TYPE II DRIVEWAY	
2/24/10 ADOPTED	THE ARCHITECT/ENGINEER ASSUMES RESPONSIBILITY FOR APPROPRIATE USE OF THIS STANDARD.	STANDARD NO. 433S-2 1 OF 2

USE	THICKNESS	REINFORCEMENT
DRIVEWAYS FOR PASSENGER VEHICLE PARKING LOTS	150 mm (6") MIN.	125 mm (5") MIN. CONCRETE WITH ONE LAYER OF13M (#4) BARS PLACED ON CHAIRS AT MIDDEPTH OF SLAB AT NO MORE THAN 450 mm (18") O.C. BOTH DIRECTIONS
ALL OTHERS	175 mm (7") MIN.	125 mm (5") MIN. CONCRETE WITH ONE LAYER OF13M (#4) BARS PLACED ON CHAIRS AT MIDDEPTH OF SLAB AT NO MORE THAN 450 mm (18") O.C. BOTH DIRECTIONS

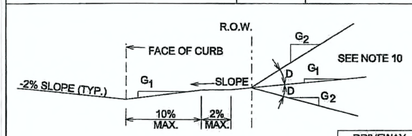

ALLOWABLE GRADES

DRIVEWAY VOLUME (ADT)	D=GRADE CHANGE STD.	MAX
>1500	0%	3%
500-1500	3%	6%
<500	6%	15%

NOTES:
1. ALL TYPE II DRIVEWAYS SHALL HAVE RADIUS ENDS.
2. DRIVEWAY WIDTHS AND RADII DIMENSIONS, ONE/TWO WAY TRAVEL REQUIREMENTS, AND GEOMETRIC LAY-OUT ARE HIGHLY VARIABLE, SUBJECT TO SITE SPECIFIC CONDITIONS AND REQUIREMENTS. SEE TRANSPORTATION CRITERIA MANUAL. SECTION 5 "DRIVEWAYS".
3. THE DRIVEWAY EDGE SHALL BE SMOOTHLY TRANSITITIONED INTO THE SIDEWALK TIE-IN LOCATION BEGINNING AT THE RADIUS PC LINE.
4. "ZERO" CURB AT PT OR SIDEWALK EDGE, WHICHEVER IS ENCOUNTERED FIRST.
5. PLACE AN EXPANSION JOINT DOWN THE CENTER OF DRIVEWAY ALL DRIVEWAYS.
6. IF DIMENSION IS LESS THAN 1.5 METERS (5 FEET), REMOVE CURB AND GUTTER TO EXISTING JOINT AND POUR MONOLITHICALLY WITH DRIVEWAY.
7. IF THE BASE IS OVER-EXCAVATED WHERE THE CURB AND GUTTER WERE REMOVED, BACKFILL WITH CONCRETE MONOLITHICALLY WITH THE DRIVEWAY.
8. TYPE II DRIVEWAYS ARE TO BE LOCATED NO CLOSER TO THE CORNER OF INTERSECTING RIGHT OF WAY THAN 60% OF PARCEL FRONTAGE AT 30 METERS (100 FEET): WHICHEVER IS LESS.
9. DRIVEWAY SHALL NOT BE CONSTRUCTED WITHIN THE CURB RETURN OF A STREET INTERSECTION.
10. WHILE THE PROPERTY OWNER REMAINS RESPONSIBLE FOR GRADE BREAKS WITHIN PRIVATE PROPERTY, THE FIRE DEPARTMENT SHALL BE CONSULTED WHERE THE DRIVEWAY IS ESSENTIAL TO EMERGENCY VEHICLE ACCESS AND "G2 IS GREATER THAN 15%.
11. USE 12 MM (1/2") ASPHALT BOARD OR OTHER APPROVED MATERIAL FOR CURB AND GUTTER EXPANSION JOINTS. SIDEWALK, AT THE R.O.W. LINE AND AT MIDWIDTH, SEE NOTE 5.
12. SEE TRANSPORTATION CRITERIA MANUAL, SECTION 5 FOR OTHER DRIVEWAY REQUIREMENTS.
13. THE SIDEWALK, REGARDLESS OF ITS LOCATION WITH RESPECT TO THE CURB OR PROPERTY LINE, SHALL BE CONNECTED TO THE DRIVEWAY AT THESE LOCATIONS.
14. WATER METER BOXES AND WASTEWATER CLEAN OUTS ARE PROHIBITED FROM BEING LOCATED IN DRIVEWAY AREAS.

CITY OF AUSTIN DEPARTMENT OF PUBLIC WORKS	TYPE II DRIVEWAY	
2/24/10 ADOPTED	THE ARCHITECT/ENGINEER ASSUMES RESPONSIBILITY FOR APPROPRIATE USE OF THIS STANDARD.	STANDARD NO. 433S-2 2 OF 2

REPAIR OF NEW STREETS and ARTERIAL STREETS IN GOOD CONDITION AND EXCAVATIONS MORE THAN 300' (91 m) IN LENGTH
(UCM SECTION 5.9.8)

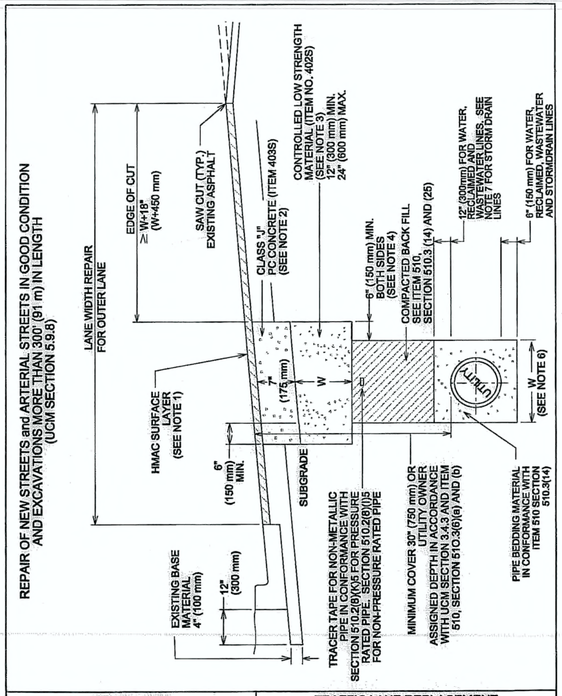

CITY OF AUSTIN DEPARTMENT OF PUBLIC WORKS	TRAFFIC LANE REPLACEMENT FOR OUTER LANE EXCAVATIONS	
2/24/10 ADOPTED	THE ARCHITECT/ENGINEER ASSUMES RESPONSIBILITY FOR APPROPRIATE USE OF THIS STANDARD.	STANDARD NO. 1100S-8A 1 OF 2

NOTES:
1. REPLACEMENT AC SURFACE LAYER SHALL BE OF THE TYPE AND THICKNESS BASED ON FUNCTIONAL CLASSIFICATION.
   a) MIN. 2" (50 mm) HMAC TYPE "D" FOR TRENCH REPAIR IN LOCAL/RESIDENTIAL STREETS.
   b) MIN. 3" (75 mm) HMAC TYPE "C" FOR TRENCH REPAIR IN COLLECTOR/ARTERIAL STREETS. SEE ITEM 340S, SECTION 340S.4.
2. PC CONCRETE GREATER THAN A 2 SACK MIX WILL NOT BE ALLOWED.
3. CLASS "J" (2 SACK MIX) MAY BE SUBSTITUTED FOR CONTROLLED LOW STRENGTH MATERIAL, IF APPROVED BY THE ENGINEER OR DESIGNATED REPRESENTATIVE. PC CONCRETE GREATER THAN A 2 SACK MIX WILL NOT BE ALLOWED.
4. FOR TRENCH WIDTHS 6" (150 mm) OR LESS, WIDENING OF THE BASE BEYOND THE TRENCH FACE MAY BE ELIMINATED IF THE EXISTING PAVEMENT STRUCTURE (INCLUDING THE BASE) REMAINS INTACT AND STABLE AFTER COMPLETION OF EXCAVATION.
5. TACK COAT (ITEM 307S) ALL EXPOSED EDGES AND SURFACES.
6. FOR WATER, RECLAIMED AND WASTEWATER LINE TRENCHES REFER TO 510.3(5) W=TRENCH WIDTH.
7. FOR STORM DRAINS, THE PIPE BEDDING ENVELOPE SHALL EXTEND THE FULL TRENCH WIDTH TO A DEPTH OF 6" (150 mm) BELOW THE PIPE, AND SHALL RISE AT LEAST TO THE SPRING LINE OF THE PIPE. THE DESIGN OF STORM DRAIN PIPES SUBJECTED TO VEHICULAR TRAFFIC OR OTHER LOADING SHALL BE SUPPORTED BY STRUCTURAL ENGINEERING CALCULATIONS OR REFERENCED TO ENGINEERING STANDARDS. IN ADDITION TO THE PIPE SELECTION, THE DESIGN INCLUDES THE PIPE BEDDING ENVELOPE, DEPTH OF COVER AND COMPACTION REQUIREMENTS.

CITY OF AUSTIN DEPARTMENT OF PUBLIC WORKS	TRAFFIC LANE REPLACEMENT FOR OUTER LANE EXCAVATIONS	
2/24/10 ADOPTED	THE ARCHITECT/ENGINEER ASSUMES RESPONSIBILITY FOR APPROPRIATE USE OF THIS STANDARD.	STANDARD NO. 1100S-8A 2 OF 2

REV. NO.	REVISION DESCRIPTION	APPROVED BY:	DATE

CobbFendley
TBPE NO. 274 / TBPLS NO. 10046701
505 EAST HUNTLAND DRIVE, SUITE 100
AUSTIN, TEXAS 78752
512.836.1555 / FAX 512.836.7727
WWW.COBBFENDLEY.COM

STANDARD DETAILS - SHEET 3

HOWARD LANE WATER MAIN EXTENSION
AUSTIN, TX

PROJ. NO. 1712-045-01
DESIGN: K. VAN HOOSIER
DRAWN: K. VAN HOOSIER
CHECK: L. PRINCE
APPR: L. PARISHER
DATE: OCTOBER 5, 2018

STATE OF TEXAS
JAMES LANCE PARISHER
105221
LICENSED PROFESSIONAL ENGINEER
10/5/2018

THESE DESIGN DOCUMENTS ARE NOT TO BE USED FOR CONSTRUCTION PRIOR TO REGULATORY SIGNATURE AND PERMIT.

SHEET
C-502
41 of 47

Dwg Info: G:\CFA\2017\1204501_Howard_Lane_Water_Main\DESIGN\C-501-DETL-COA.dwg – Tab: DETL-03 – Plotted: 10/5/2018 3:49 PM By: KRISTEN VAN HOOSIER

TEMPORARY TRENCH REPAIR IN ASPHALTIC SURFACE
ITEM 510 SECTION 510.3 (25)(h)

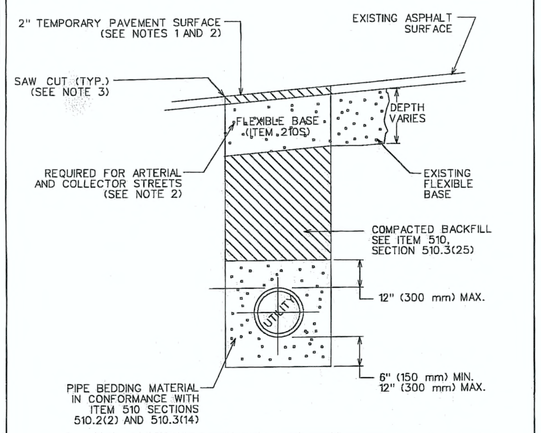

1. TEMPORARY PAVEMENT REPAIRS SHALL BE ALLOWED NO LONGER THAN 90 DAYS AFTER PASSING THE WATER PRESSURE AND/OR WASTEWATER MANDREL TESTS. IF TEMPORARY PAVEMENT REPAIRS ARE TO REMAIN IN PLACE FOR A PERIOD EXCEEDING 90 DAYS, ON ANY SINGLE TRENCH LINE OR INDIVIDUAL STREET, SUCH TEMPORARY PAVEMENT SHALL BE HMAC, PLACED AND COMPACTED SUFFICENTLY TO WITHSTAND THE ANTICIPATED TRAFFIC LOADS OVER THE DURATION OF THE TEMPORARY REPAIR.
2. IF EXCAVATION AREA IS OPEN FOR TEMPORARY PUBLIC USE, THE SURFACE SHALL BE MAINTAINED LEVEL WITH ADJACENT RIDING SURFACE USING COLD MIX AC IN ACCORDANCE WITH TxDOT "DMS-9203, RAPID CURING ASPHALT CONCRETE PATCHING MATERIAL" OR TEMPORARY HMAC PER COA ITEM "340S HOT MIX ASPHALTIC CONCRETE PAVEMENT". A MINIMUM OF TWO INCHES (2") OF TEMPORARY COLD MIX OR HMAC SHALL BE PLACED OVER COMPACTED BACKFILL. FLEXIBLE BASE SHALL ALSO BE REQUIRED, FOR ALL COLLECTOR OR ARTERIAL STREETS.
3. THE EXISTING CONCRETE OR ASPHALT PAVING SURFACE SHALL BE SAW CUT. SAW CUTS SHALL BE IN A STRAIGHT LINE, ALONG THE SIDES OF THE TRENCH (OR MANHOLE EXCAVATION) AND SYMMETRICAL ABOUT THE CENTER LINE OF THE EXCAVATION. ANY DAMAGED EDGES SHALL BE RE-SAW CUT IF REQUIRED BY THE OWNER.
4. HMAC OR COLD MIX SHALL BE FREE OF CONTAMINATION, AS DETERMINED BY A VISUAL INSPECTION BY THE OWNER'S REPRESENTATIVE, REFERENCE ITEM 340S SECTION 340S.10 A.
5. TEMPORARY PAVING MATERIAL MUST BE COMPACTED WITH A SMOOTH DRUM VIBRATORY ROLLER.
6. THE FINISHED SURFACE SHALL BE MAINTAINED DUST FREE AND PROVIDE A SMOOTH AND SAFE RIDING SURFACE FOR ALL VEHICLES ALONG THE ROUTE, INCLUDING, BUT NOT LIMITED TO SMALL CARS, MOTORCYCLES, MOPEDS AND BICYCLES. THE TEMPORARY SURFACE SHALL BE MAINTAINED BY THE CONTRACTOR THE ENTIRE TIME THE TEMPORARY SURFACE IS IN PLACE. DAILY MAINTENANCE SHALL BE PERFORMED BASED ON FIELD CONDITIONS AND AT THE DIRECTION OF THE OWNER'S REPRESENTATIVE, UNTIL THE FINAL PAVEMENT SURFACE IS PLACED.
7. THE TEMPORARY PAVEMENT SURFACE SHALL HAVE A MAXIMUM ALLOWABLE DEVIATION OF 1/4" ABOVE OR BELOW THE EXISTING PAVEMENT SURFACE DIRECTLY ADJACENT TO THE PATCH.
8. ANY PORTIONS OF THE TEMPORARY PAVEMENT SURFACE THAT HAVE SETTLED, BECOME DAMAGED, OR DETERIORATED MUST BE REPAIRED BY REMOVING THE EXISTING TEMPORARY SURFACE MATERIAL TO A MINIMUM DEPTH OF 2" BELOW THE SURFACE ELEVATION PRIOR TO REPLACING AND RECOMPACTING NEW COLD MIX/HOT MIX IN THE EXCAVATION AREA.
9. IF IT IS DETERMINED DURING CORRECTIVE ACTION THAT SOFT, SATURATED AND/OR UNSTABLE SUBSURFACE SOILS ARE CONTRIBUTING TO THE FAILURE OF THE TEMPORARY PAVEMENT SECTION, THE UNSUITABLE MATERIALS MUST BE REMOVED AND REPLACED WITH BACKFILL SOILS FREE OF ORGANICS, STONES OR ROCKS OVER 8 INCHES, AND HAVING A PLASTICITY INDEX OF 20 OR LESS, AND SHALL HAVE A MC WITHIN 2X OF OPTIMUM, PRIOR TO REPLACING THE TEMPORARY PAVEMENT SURFACE.
10. CLASS "J" PC CONCRETE (ITEM 403S) OR CONTROLLED LOW STRENGTH MATERIAL (CLSM) MAY BE SUBSTITUTED IN THESE REPAIRS FOR THE FLEXIBLE BASE AND COMPACTED BACKFILL. PC CONCRETE GREATER THAN A 2 SACK MIX WILL NOT BE ALLOWED.
11. ALL EXISTING ROADWAY STRIPING AND PAVEMENT MARKINGS REMOVED OR DAMAGED BY THE CONTRACTOR'S WORK SHALL BE RESTORED PRIOR TO OPENING THE STREET TO TRAFFIC.

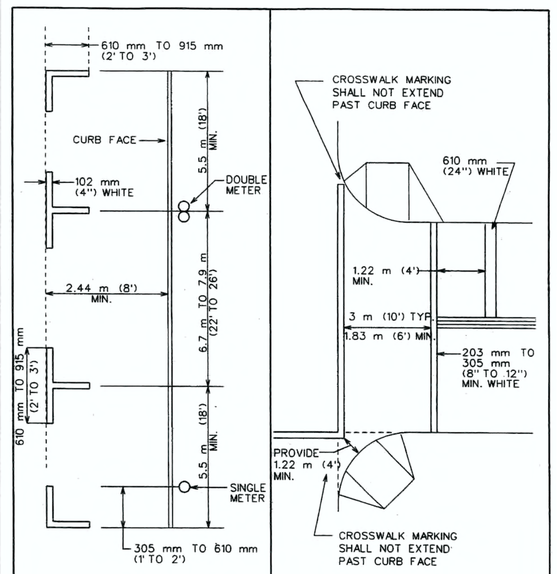

PARKING STALLS

CROSSWALK AND STOPBARS

SEE SHEET 5 OF 5 FOR GENERAL NOTES.

1. ALL PAVEMENT MARKINGS USED SHALL CONFORM TO THE CURRENT EDITION OF THE TEXAS MANUAL ON UNIFORM TRAFFIC CONTROL DEVICES (TMUTCD) AND THE CITY OF AUSTIN TRANSPORTATION CRITERIA MANUAL.
2. THE CONTRACTOR SHALL BE RESPONSIBLE FOR MAINTAINING ALL TEMPORARY AND EXISTING PAVEMENT MARKINGS ON ALL ROADWAYS WITHIN THE CONSTRUCTION LIMITS AND ON ANY ROADWAY OUTSIDE THE CONSTRUCTION LIMITS THAT REQUIRES THE REROUTING OF TRAFFIC FOR HIS WORK.
3. ALL ROADWAYS TO BE OPENED TO TRAFFIC SHALL HAVE TEMPORARY OR STANDARD PAVEMENT MARKINGS INSTALLED AS SHOWN IN THE DRAWINGS, AT THE END OF EACH DAY'S OPERATION.
4. MARKINGS SHALL PROVIDE A VISIBLE REFERENCE FOR A MINIMUM DISTANCE OF 91.5 m (300') DURING NORMAL DAYLIGHT HOURS AND 49 m (160') WHEN ILLUMINATED BY AUTOMOBILE LOW-BEAM HEADLIGHTS AT NIGHT, UNLESS SIGHT DISTANCE IS RESTRICTED BY ROADWAY GEOMETRICS.
5. ALL TEMPORARY REMOVABLE PAVEMENT MARKINGS SHALL BE SUPPLEMENTED WITH RAISED PAVEMENT MARKERS.
6. TEMPORARY REMOVABLE PAVEMENT MARKING TAPE IS THE PREFERRED PAVEMENT MARKING; HOWEVER, THE CONTRACTOR MAY, WITH APPROVAL OF THE ENGINEER OR DESIGNATED REPRESENTATIVE, USE RAISED PAVEMENT MARKINGS, PAINT AND BEADS OR THERMOPLASTIC IF THE ROADWAY IS TO BE COMPLETELY RESURFACED.
7. PAVEMENT MARKINGS THAT ARE NO LONGER APPLICABLE AND WHICH MAY CREATE CONFUSION OR DIRECT A MOTORIST TOWARD OR INTO THE CLOSED PORTION OF THE ROADWAY, SHALL BE REMOVED OR OBLITERATED BEFORE THE ROADWAY IS OPENED TO TRAFFIC. THE ABOVE DOES NOT APPLY TO SHORT-DURATION, SHORT TERM STATIONARY OR INTERMEDIATE TERM STATIONARY WORK.
8. REMOVAL OR OBLITERATION OF PAVEMENT MARKINGS INCLUDES CENTERLINES, CHANNELIZING LINES, LANE LINES, EDGE LINES, WORDS, ARROWS, SYMBOLS AND RAISED PAVEMENT MARKINGS.
9. PAVEMENT MARKINGS SHALL BE REMOVED OR OBLITERATED TO THE FULLEST EXTENT POSSIBLE, SO AS NOT TO LEAVE A DISCERNIBLE MARK. GRINDING OF PAVEMENT MARKINGS WILL ONLY BE ALLOWED ON PAVEMENT THAT IS TO BE COMPLETELY REPLACED.
10. TEMPORARY FLEXIBLE-REFLECTIVE TABS MAY BE USED FOR TEMPORARY PAVEMENT MARKINGS ON NEW PAVEMENT, PROVIDED THEY ARE PLACED ON 1.5 m (5') CENTERS.
11. THE CONTRACTOR SHALL PLACE TEMPORARY FLEXIBLE-REFLECTIVE TABS IMMEDIATELY AFTER THE FINAL HMAC OVERLAY AS EACH LANE IS COMPLETED AND READY FOR TRAFFIC. NO DIRECT PAYMENT WILL BE MADE FOR THIS OPERATION, BUT WILL BE CONSIDERED SUBSIDIARY TO THE OTHER BID ITEMS. FINAL STRIPING SHOULD BE COMPLETED WITHIN FOURTEEN (14) DAYS OF THE FINAL PAVING.

CITY OF AUSTIN DEPARTMENT OF PUBLIC WORKS	TEMPORARY TRENCH REPAIR- ASPHALT SURFACE	STANDARD NO.
Bill Gardner 12/9/08 ADOPTED	THE ARCHITECT/ENGINEER ASSUMES RESPONSIBILITY FOR APPROPRIATE USE OF THIS STANDARD.	1100S-4 1 OF 2

CITY OF AUSTIN DEPARTMENT OF PUBLIC WORKS	TEMPORARY TRENCH REPAIR- ASPHALT SURFACE	STANDARD NO.
Bill Gardner 12/9/08 ADOPTED	THE ARCHITECT/ENGINEER ASSUMES RESPONSIBILITY FOR APPROPRIATE USE OF THIS STANDARD.	1100S-4 2 OF 2

CITY OF AUSTIN DEPARTMENT OF PUBLIC WORKS	PARKING STALLS, CROSSWALK AND STOP BARS	STANDARD NO.
Bill Gardner 3/13/02 ADOPTED	THE ARCHITECT/ENGINEER ASSUMES RESPONSIBILITY FOR APPROPRIATE USE OF THIS STANDARD.	804S-3 4 OF 5

CITY OF AUSTIN DEPARTMENT OF PUBLIC WORKS	GENERAL NOTES	STANDARD NO.
Bill Gardner 3/13/02 ADOPTED	THE ARCHITECT/ENGINEER ASSUMES RESPONSIBILITY FOR APPROPRIATE USE OF THIS STANDARD.	804S-3 5 OF 5

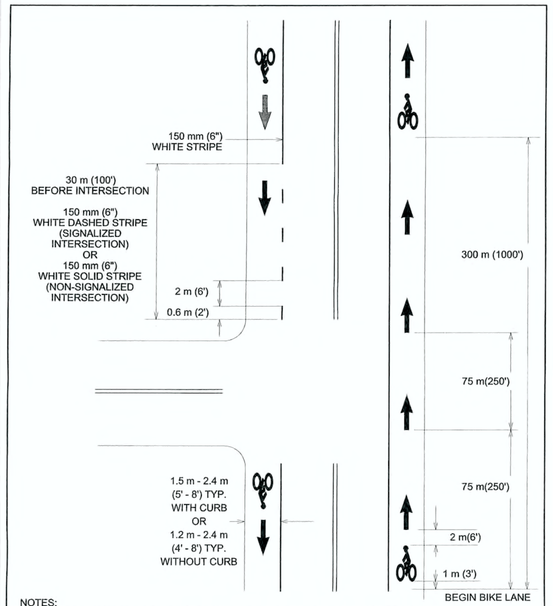

NOTES:
1. PLACE BIKE SYMBOL AND DIRECTIONAL ARROW AT START OF EVERY BIKE LANE.
2. PLACE BIKE SYMBOL AND DIRECTIONAL ARROW EVERY 300 m (1000') AND AFTER EACH INTERSECTION
3. PLACE DIRECTIONAL ARROW AT 75 m (250') INTERVALS BETWEEN BIKE SYMBOL/ARROW GROUPS.
4. LANE WIDTHS ARE MEASURED FROM CENTER OF BIKE LANE STRIPE TO THE FACE OF CURB OR EDGE OF PAVEMENT AT THE SHOULDER FOR A ROAD WITHOUT A CURB

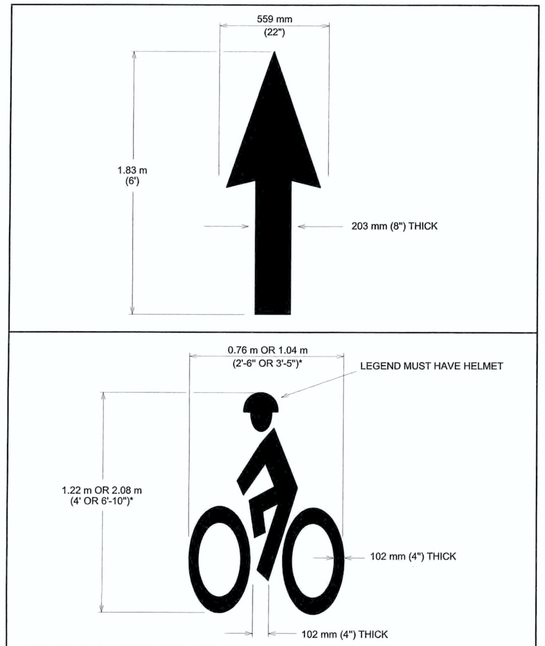

* DIMENSION IS DEPENDENT ON LANE WIDTH

CITY OF AUSTIN DEPARTMENT OF PUBLIC WORKS	BICYCLE LANE MARKINGS	STANDARD NO.
9/26/12 ADOPTED	THE ARCHITECT/ENGINEER ASSUMES RESPONSIBILITY FOR APPROPRIATE USE OF THIS STANDARD.	829S-1A 1 OF 2

CITY OF AUSTIN DEPARTMENT OF PUBLIC WORKS	BICYCLE LANE MARKINGS	STANDARD NO.
9/26/12 ADOPTED	THE ARCHITECT/ENGINEER ASSUMES RESPONSIBILITY FOR APPROPRIATE USE OF THIS STANDARD.	829S-1A 2 OF 2

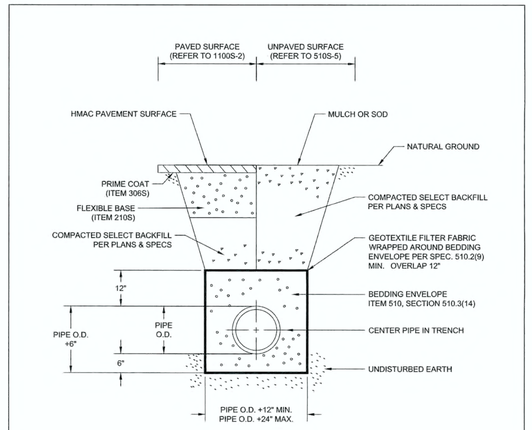

REFERENCES:
1. UTILITY CRITERIA MANUAL SECTION 3.4.3, "FINAL DESIGN"
2. STANDARD SPECIFICATION MANUAL ITEM 510, SECTION 510.2(6), "SELECT BACKFILL OR BORROW"; SECTION 510.3(6), "TRENCH DEPTH AND DEPTH OF COVER"; SECTION 510.3(14), "PIPE BEDDING ENVELOPE"
3. SECTION 510.2(9), "GEOTEXTILE FILTER FABRIC FOR PIPE BEDDING MATERIAL" SPECIAL PROVISION SP-510-HW.

REVIEWED
MAR 0 5 2019
Austin Water Utility

GEOTEXTILE FILTER FABRIC DETAIL

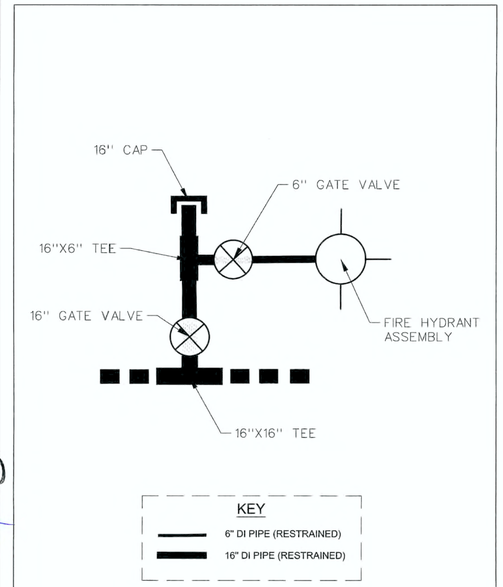

BRANCH CONNECTION DETAIL

N.T.S.

REV. NO.	REVISION DESCRIPTION	APPROVED BY:	DATE

CobbFendley
TBPE NO. 274 / TBPLS NO. 10046701
505 EAST HUNTLAND DRIVE, SUITE 100
AUSTIN, TEXAS 78752
512.834.9788 | FAX 512.834.7727
WWW.COBBFENDLEY.COM

STANDARD DETAILS - SHEET 4

HOWARD LANE WATER MAIN EXTENSION
AUSTIN, TX

CITY OF AUSTIN
FOUNDED 1839

PROJ. NO. 1712-045-01
DESIGN: K. VAN HOOSIER
DRAWN: K. VAN HOOSIER
CHECK: L. PRINCE
APPR: L. PARISHER
DATE: OCTOBER 5, 2018

STATE OF TEXAS
JAMES LANCE PARISHER
108221
LICENSED PROFESSIONAL ENGINEER
10/5/2018

THESE DESIGN DOCUMENTS ARE NOT TO BE ISSUED FOR CONSTRUCTION PRIOR TO REGULATORY SIGNATURE AND PERMIT.

SHEET
C-503
42 of 47

Dwg Info: G:\CFA\2017\1204501_Howard_Lane_Water_Main\DESIGN\C-501-DETL-COA.dwg -- Tab: DETL-04 -- Plotted: 10/5/2018 3:49 PM By: KRISTEN VAN HOOSIER

DISCLAIMER: The use of this standard is governed by the "Texas Engineering Practice Act". No warranty of any kind is made by TxDOT for any purpose whatsoever. TxDOT assumes no responsibility for the conversion of this standard to other formats or for incorrect results or damages resulting from its use.

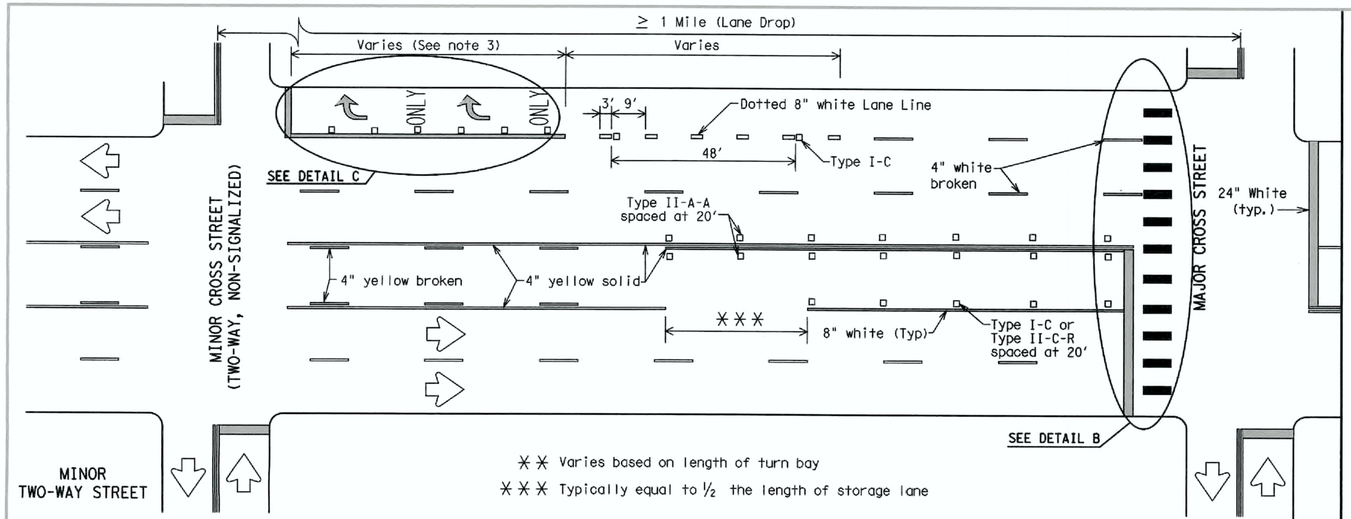

TYPICAL TWLTL AT TWO-WAY CROSS STREET AND RIGHT TURN LANE DROP

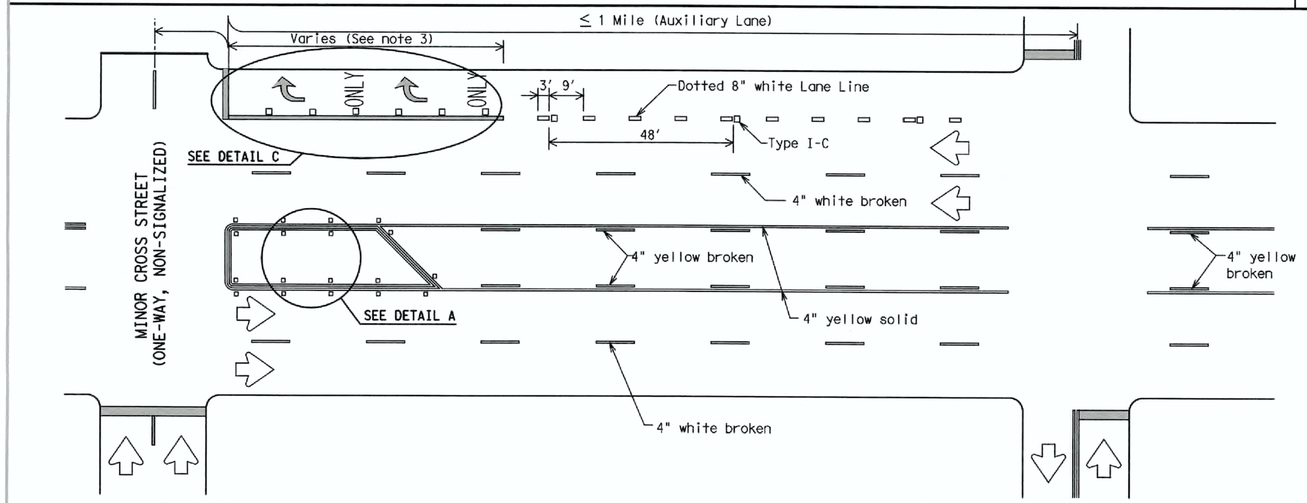

TYPICAL TWLTL AT ONE-WAY STREET AND RIGHT TURN AUXILIARY LANE

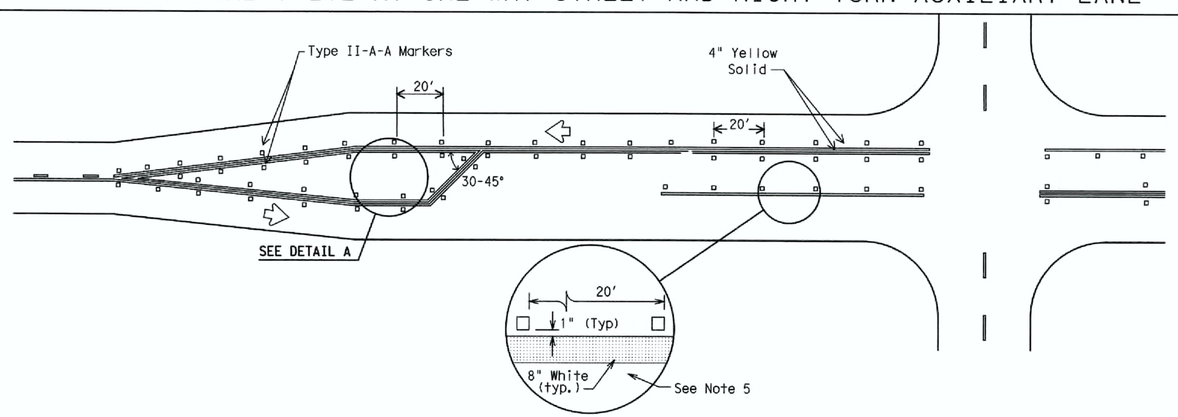

TYPICAL TWO-LANE HIGHWAY INTERSECTION WITH LEFT TURN BAYS

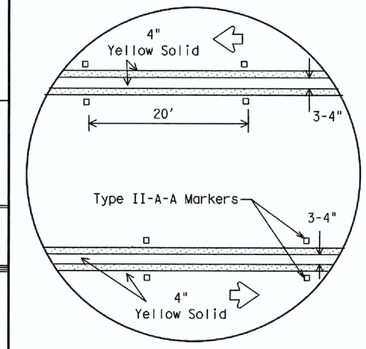

DETAIL A

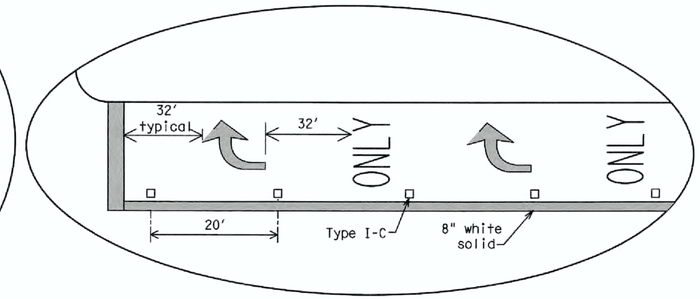

DETAIL C

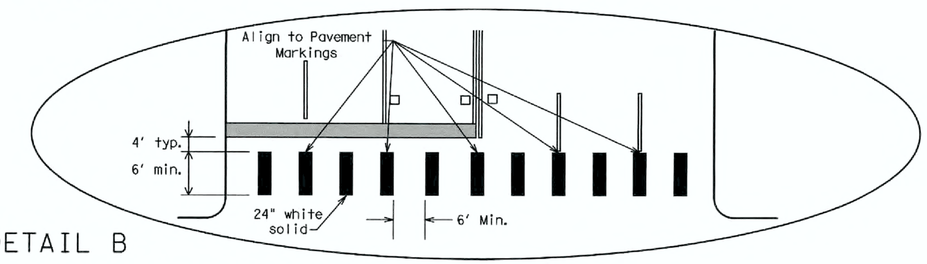

DETAIL B

1. Final placement of Stop Bar and Continental Crosswalk shall be approved by the Engineer in the field.
2. Space Continental Markings wide enough to avoid vehicle wheel paths.
3. Width of spacing between markings shall be consistent throughout the length of the crosswalk, except where marking is adjacent to curb.

MATERIAL SPECIFICATIONS	
PAVEMENT MARKERS (REFLECTORIZED)	DMS-4200
EPOXY AND ADHESIVES	DMS-6100
BITUMINOUS ADHESIVE FOR PAVEMENT MARKERS	DMS-6130
TRAFFIC PAINT	DMS-8200
HOT APPLIED THERMOPLASTIC	DMS-8220
PERMANENT PREFABRICATED PAVEMENT MARKINGS	DMS-8240

All pavement marking materials shall meet the required Departmental Material Specifications as specified by the plans.

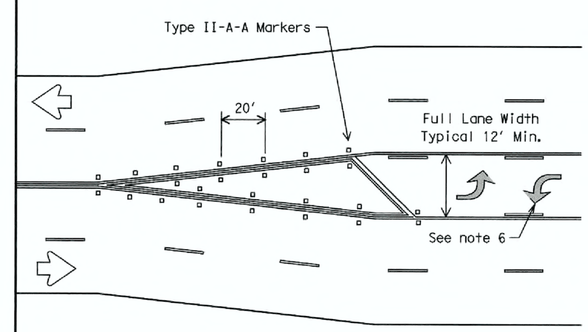

TYPICAL TRANSITION FOR TWLTL AND DIVIDED HIGHWAY

GENERAL NOTES

1. Refer elsewhere in plans for additional RPM placement and details.
2. Lane use word and arrow markings shall be used where through lanes approaching an intersection become mandatory turn lanes. Lane use word and arrow markings should be used in auxiliary lanes of substantial length. Lane use arrow markings or word and arrow markings may be used in other lanes and turn bays for emphasis. Details for words and arrows as shown in the Standard Highway Sign Designs for Texas.
3. When lane used word and arrow markings are used, two sets of arrows should be used if the length of the bay is greater than 180 feet. When a single lane use arrow or word and arrow marking is used for a short turn lane, it should be located at or near the upstream end of the full-width turn lane.
4. Other crosswalk paterns as shown in the "Texas Manual on Uniform Traffic Control Devices" may be used.
5. Raised pavement marker Type I-C with undivided highways, flush medians and two way left turn lanes. Raised pavement marker Type II-C-R with divided highways and raised medians.
6. A two-way left-turn (TWLT) lane-use arrow pavement marking should be used at or just downstream from the beginning of a two-way left-turn lane within a corridor. Repeating the marking after each intersection or dedicated turn bay is not required unless stated elsewhere in the plans.

Texas Department of Transportation | Austin District Standard

Austin District Traffic

PAVEMENT MARKINGS FOR TWO-WAY LEFT TURN LANES DIVIDED HIGHWAYS AND RURAL LEFT TURN BAYS

C-504 PM(3)-16 (AUS)

©YEAR® REVISIONS	CONT	SECT	JOB	HIGHWAY
	DIST		COUNTY	SHEET NO.
	AUS		TRAVIS	43 of 47

DATE: 7/17/2018 9:41:11 AM
FILE: ...\XREF\Details\PM(3)-16(AUS).dgn

DISCLAIMER: The use of this standard is governed by the "Texas Engineering Practice Act". No warranty of any kind is made by TxDOT for any purpose whatsoever. TxDOT assumes no responsibility for the conversion of this standard to other formats or for incorrect results or damages resulting from its use.

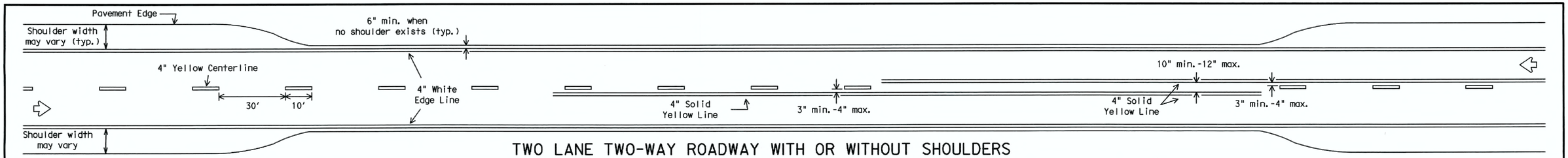

TWO LANE TWO-WAY ROADWAY WITH OR WITHOUT SHOULDERS

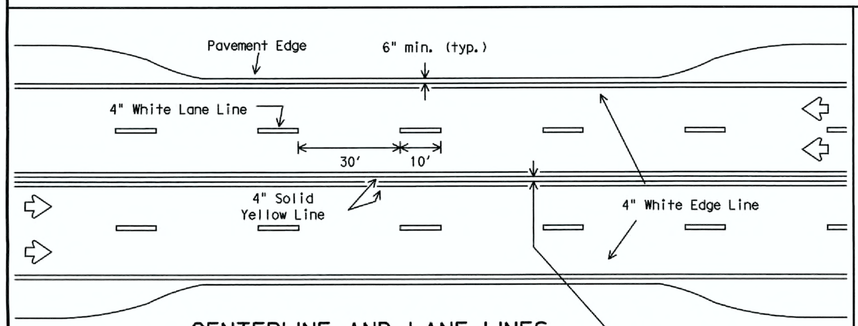

CENTERLINE AND LANE LINES FOUR LANE TWO-WAY ROADWAY WITH OR WITHOUT SHOULDERS

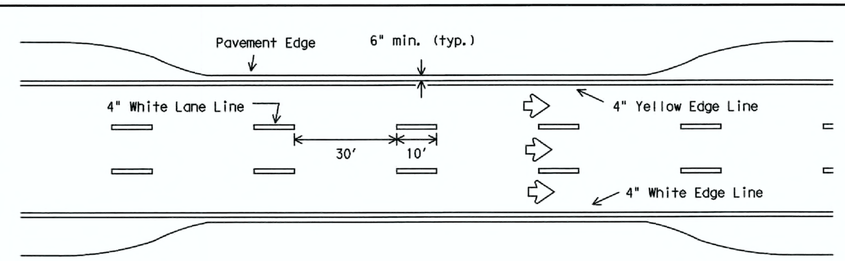

EDGE LINE AND LANE LINES ONE-WAY ROADWAY WITH OR WITHOUT SHOULDERS

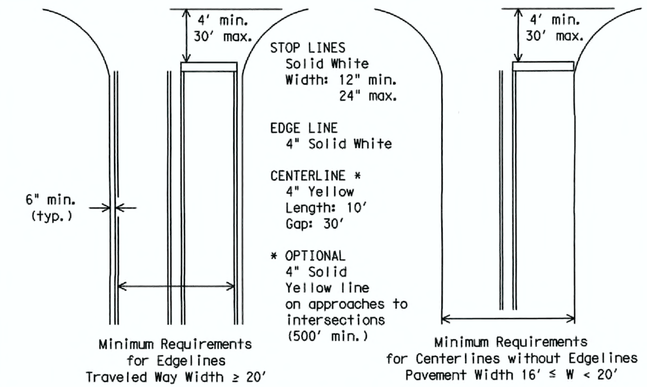

GUIDE FOR PLACEMENT OF STOP LINES, EDGE LINE & CENTERLINE

Based on Traveled Way and Pavement Widths for Undivided Highways

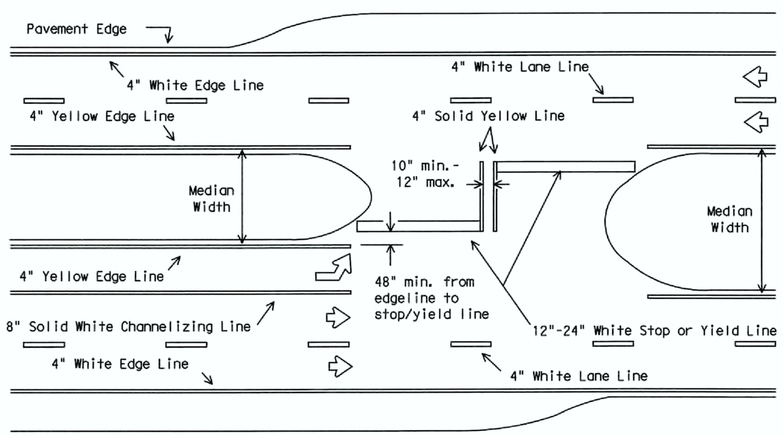

All medians shall be field measured to determine the location of necessary striping. Stop/Yield bars and centerlines shall be placed when the median width is greater than 30 ft. The median width is defined as the area between two roadways of a divided highway measured from edge of traveled way to edge of traveled way. The median excludes turn lanes. The median width might be different between intersections, interchanges and of opposite approaches of the same intersection. The narrow median width will be the controlling width to determine if markings are required.

FOUR LANE DIVIDED ROADWAY INTERSECTIONS

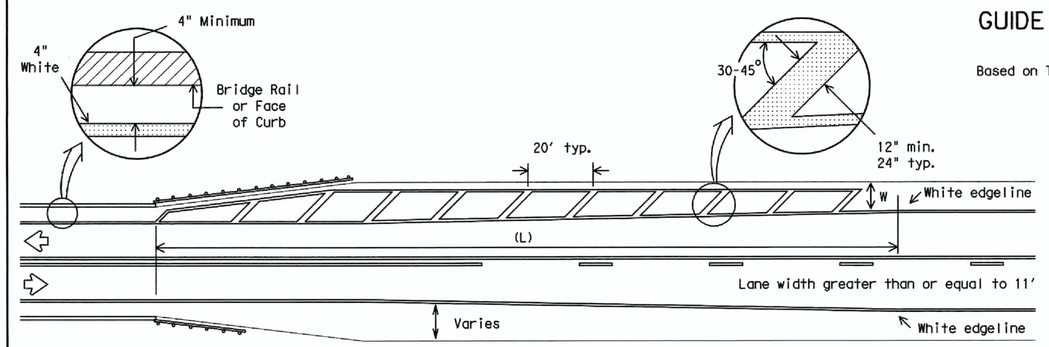

NOTES:

1. No-passing zone on bridge approach is optional but if used, it shall be a minimum 500 feet long.
2. For crosshatching length (L) see Table 1.
3. The width of the offset (W) and the required crosshatching width is the full shoulder width in advance of the bridge.
4. The crosshatching is not required if delineators or barrier reflectors are used along the structure.
5. For guard fence details, refer elsewhere in the plans.

ROADWAYS WITH REDUCED SHOULDER WIDTHS ACROSS BRIDGE OR CULVERT

TABLE 1 - TYPICAL LENGTH (L)

Posted Speed *	Formula
≤ 40	$L = \frac{WS^2}{60}$
≥ 45	L=WS

* 85th Percentile Speed may be used on roads where traffic speeds normally exceed the posted speed limit. Crosshatching length should be rounded up to nearest 5 foot increment.

L=Length of Crosshatching (FT.) W=Width of Offset (FT.)
S=Posted Speed (MPH)

EXAMPLES:

An 8 foot shoulder in advance of a bridge reduces to 4 feet on a 70 MPH roadway. The length of the crosshatching should be:

$L = 8 \times 70 = 560$ ft.

A 4 foot shoulder in advance of a bridge reduces to 2 feet on a 40 MPH roadway. The length of the crosshatching should be:

$L = 4(40)^2 / 60 = 106.67$ ft. rounded to 110 ft.

GENERAL NOTES

1. Edgeline striping shall be as shown in the plans or as directed by the Engineer. The edgeline should typically be placed a minimum of 6 inches from the edge of pavement. This distance may vary due to pavement raveling or other conditions. Edgelines are not required in curb and gutter sections of roadways.
2. The traveled way includes only that portion of the roadway used for vehicular travel and not the parking lanes, sidewalks, berms and shoulders. The traveled ways shall be measured from the inside of edgeline to inside of edgeline of a two lane roadway.

MATERIAL SPECIFICATIONS	
PAVEMENT MARKERS (REFLECTORIZED)	DMS-4200
EPOXY AND ADHESIVES	DMS-6100
BITUMINOUS ADHESIVE FOR PAVEMENT MARKERS	DMS-6130
TRAFFIC PAINT	DMS-8200
HOT APPLIED THERMOPLASTIC	DMS-8220
PERMANENT PREFABRICATED PAVEMENT MARKINGS	DMS-8240

All pavement marking materials shall meet the required Departmental Material Specifications as specified by the plans.

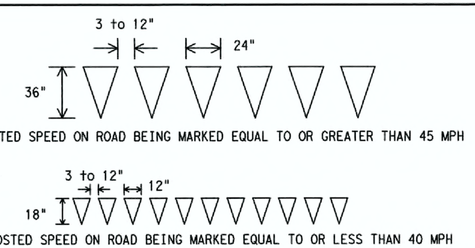

YIELD LINES

Texas Department of Transportation
Traffic Operations Division

TYPICAL STANDARD PAVEMENT MARKINGS

C-505 PM(1)-12

© TxDOT November 1978

DN: TXDOT	CK: TXDOT	DW: TXDOT	CK: TXDOT

REVISIONS	CONT	SECT	JOB	HIGHWAY
8-95 2-12				
5-00				
8-00	DIST		COUNTY	SHEET NO.
3-03				44 of 47

22A

DATE:
FILE:

DISCLAIMER:
The use of this standard is governed by the "Texas Engineering Practice Act". No warranty of any kind is made by TxDOT for any purpose whatsoever. TxDOT assumes no responsibility for the conversion of this standard to other formats or for incorrect results or damages resulting from its use.

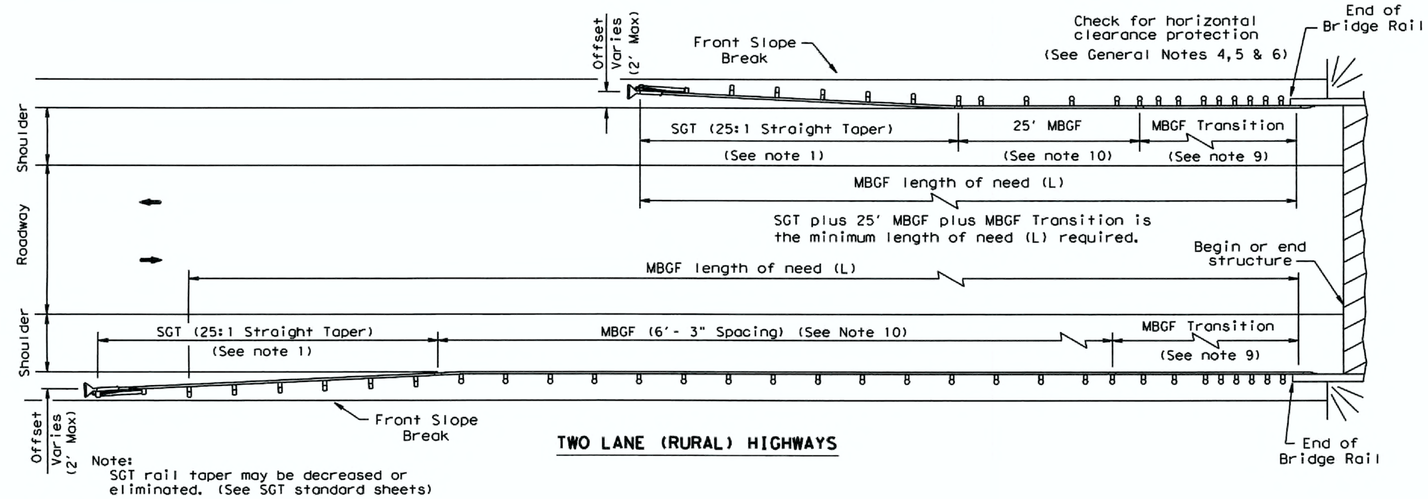

Note:
SGT rail taper may be decreased or eliminated. (See SGT standard sheets)

TWO LANE (RURAL) HIGHWAYS

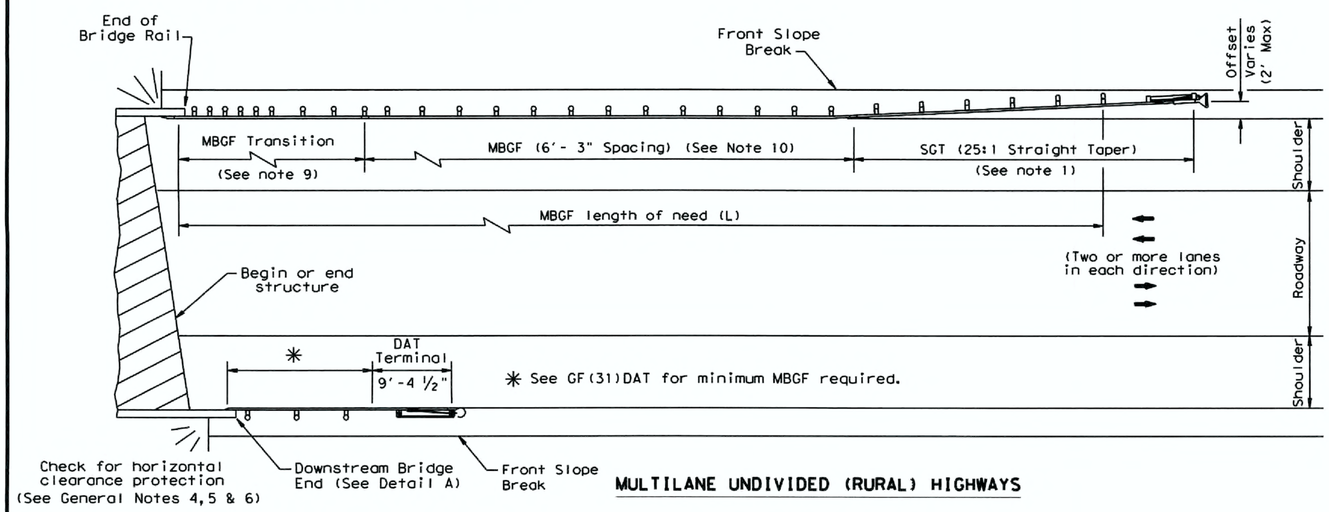

MULTILANE UNDIVIDED (RURAL) HIGHWAYS

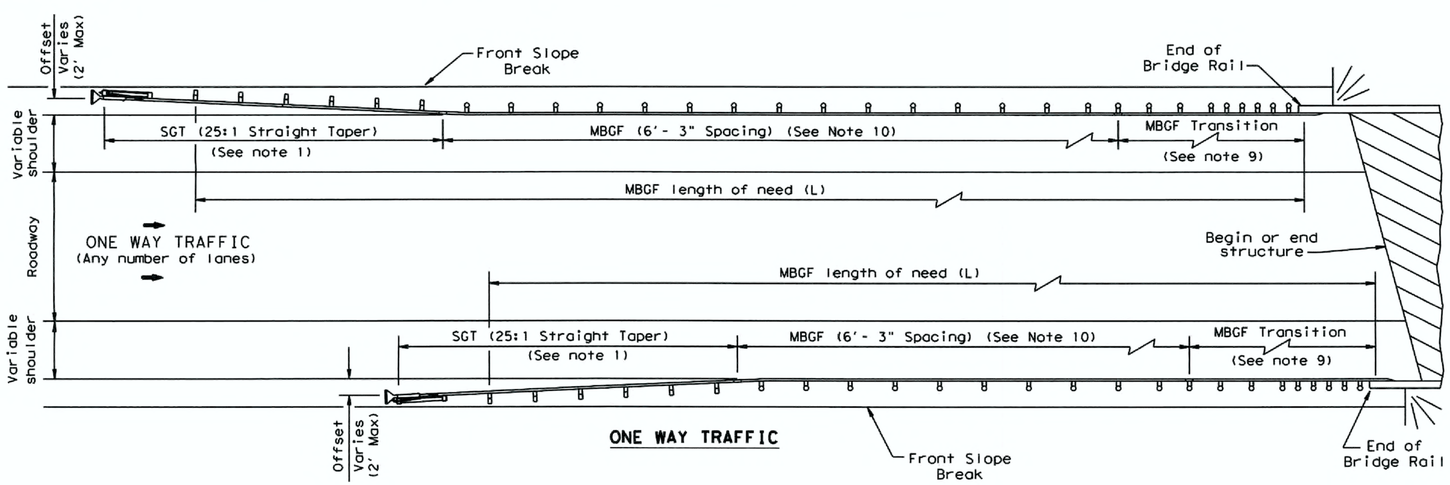

ONE WAY TRAFFIC

GENERAL NOTES

1. For more detail: See GF(31), SGT( )31, GF(31)TR, and GF(31)TL2 standard sheets.
2. Quantities of metal beam guard fence (MBGF) at individual bridge ends are as shown in the plans.
3. Use average daily traffic (ADT) for the current year to determine MBGF length of need in accordance with the Roadway Design Manual unless otherwise specified. Where significant traffic volume growth is anticipated on low volume (0-750 ADT) highways, use length determinations for the higher volume category.
4. MBGF may not be required to shield departure end of bridge unless other obstacles within the horizontal clearance limits or opposing traffic indicate a MBGF consideration.
5. Downstream anchor terminals (DAT) are only for downstream end anchorage use, outside the horizontal clearance area of opposing traffic.
6. Direct connection of MBGF to concrete rails are only for downstream rail connections outside the horizontal clearance area of opposing traffic. (This requires a minimum of three standard line posts plus the DAT terminal, See Detail A)
7. The crown shall be widened to accommodate MBGF. Typically the "front slope" break should be 2'- 0" from the back of the MBGF post. This applies to new construction on new alignment or where existing roadway cross section is to be widened to increase roadway width. This does not apply to rehabilitation work where existing roadway crown width is to be retained (See Typical Cross Section at MBGF).
8. For restrictive bridge widths: The MBGF should be properly transitioned from the existing bridge rail to the adjoining MBGF (See MBGF Transition Standards). Metal beam guard fence at these bridge location(s) shall be flared at the rate of 25:1 or flatter, and be of the length necessary to locate the terminal end at the 2 ft."maximum" offset from the shoulder edge in the approach direction.
9. Transition length and post spacing will vary depending on the transition type. Transition type will be shown elsewhere in the plans.
10. A minimum 25' length of MBGF will be required.

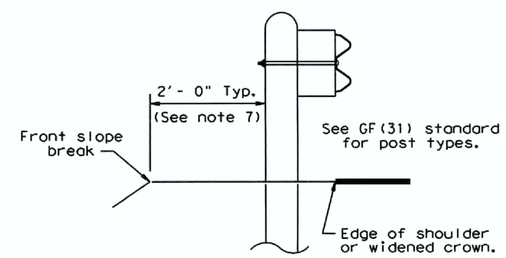

TYPICAL CROSS SECTION AT MBGF

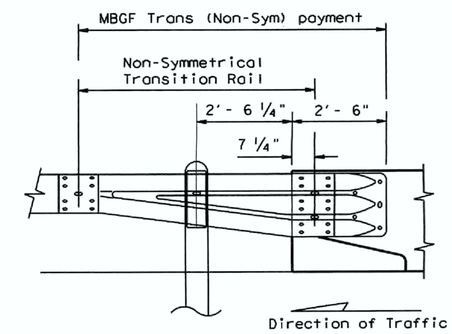

Note:
All rail elements shall be lapped in the direction of adjacent traffic.

DETAIL A

Showing Downstream Rail Attachment

Texas Department of Transportation — Design Division Standard

BRIDGE END DETAILS

(METAL BEAM GUARD FENCE APPLICATIONS TO RIGID RAILS)

C-506 **BED-14**

FILE: bed14.dgn	DN: TxDOT	CK: AM	DW: BD/VP	CK: CGL
© TxDOT: December 2011	CONT	SECT	JOB	HIGHWAY
REVISIONS REVISED APRIL 2014 SEE (MEMO 0414)	DIST	COUNTY		SHEET NO. 45 of 47

DATE:
FILE:

DISCLAIMER:
The use of this standard is governed by the "Texas Engineering Practice Act". No warranty of any kind is made by TxDOT for any purpose whatsoever. TxDOT assumes no responsibility for the conversion of this standard to other formats or for incorrect results or damages resulting from its use.

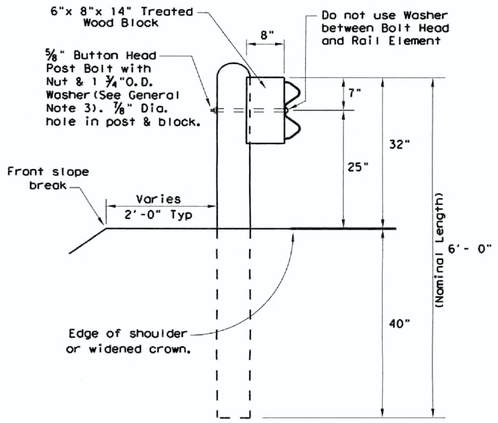

TYPICAL POST

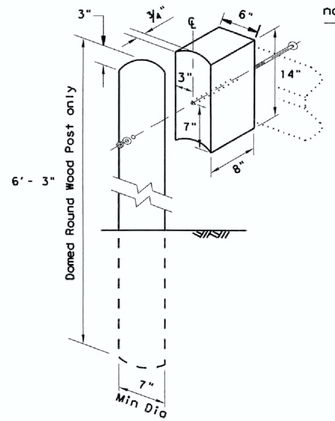

WOOD BLOCK TO ROUND WOOD POST

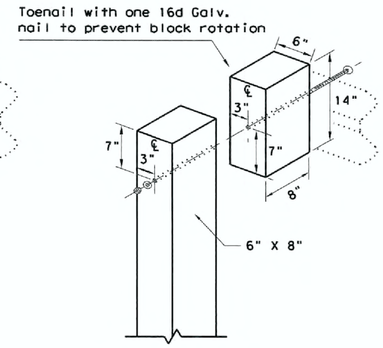

WOOD BLOCK TO RECTANGULAR WOOD POST

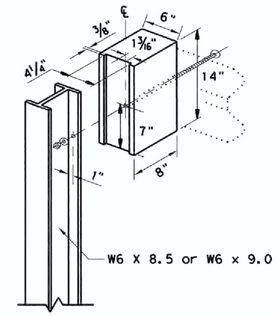

WOOD BLOCK TO STEEL POST

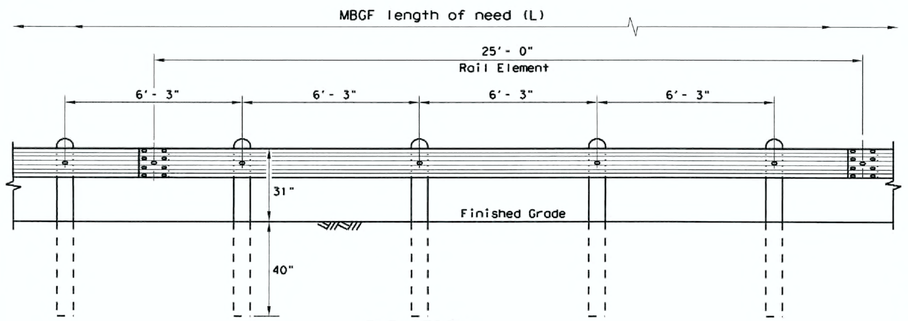

ELEVATION
MID-SPAN RAIL SPLICE

Showing a 25'- 0" section of W-Beam rail, 12'- 6" rail sections may also be supplied (See General Note 2)

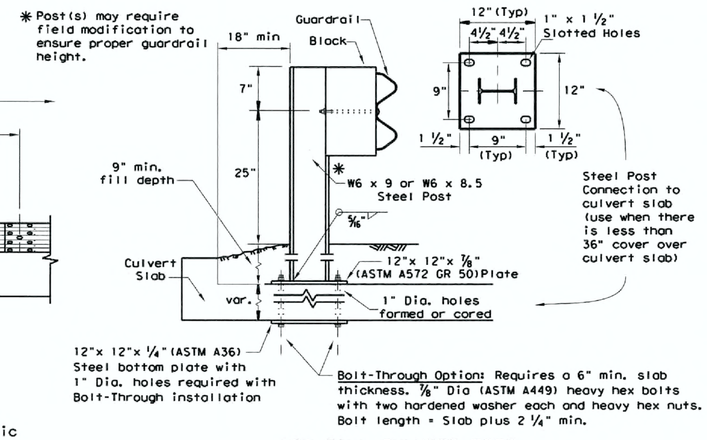

LOW FILL CULVERT POST

Culverts of 25 ft. or less, see GF(31)LS standard for "Long Span" option.

Epoxy Note:
Epoxy Anchor Option: This option may only be used if the culvert slab is 8" min. thick. Threaded anchor rods must be 7/8" Dia. ASTM A449 or A193 Grade B7 with heavy hex nut, and one hardened washer each. Embed anchor rods 6" with Hilti HIT RE 500 epoxy adhesive. Other Type III Class C epoxy adhesives meeting the requirements of DMS-6100, "Epoxies and Adhesives", may be used if it can be demonstrated that they meet or exceed the strength of Hilti HIT RE 500 with the same embedment depth and threaded rod dia. Follow the manufacturer's requirements for installing epoxied threaded rods. Extend rods 1/4" min. beyond nut.

GENERAL NOTES

1. The type of post (round wood post, rectangular wood post, or steel post) will be as shown in the plans. The exact position of MBGF shall be shown in the plans or as directed by the Engineer. Steel posts to be galvanized in accordance with Item 445, "Galvanizing."
2. Rail element shall meet the requirements of Item 540, "Metal Beam Guard Fence" except as modified in the plans. The Contractor may furnish rail elements of 25'- 0", or 12'- 6" (nom.) lengths. Rail elements may have slotted holes at 3'-1 1/2" C-C or 6'-3" C-C. A special length of rail may be manufactured to accommodate the downstream anchor terminal (DAT) and the transition sections of guardrail.
3. Button head "post" bolts (ASTM A307) shall be of sufficient length to extend through the full thickness of the nut (ASTM A563) and Type A (1 3/4" O.D.)washer and not more than 1" beyond it. Button head "splice" bolts (ASTM A307) are 5/8" x 1 1/4" (or 2" long at triple rail splices) with a 5/8" double recessed nut (ASTM A563). Thrie beam "connection" 7/8" dia. (ASTM A325) hex bolts shall be of sufficient length to extend through the full thickness of the rail, washers, and nuts.
4. Fittings (bolts, nuts, and washers) shall be galvanized in accordance with Item 445, "Galvanizing." Fittings shall be subsidiary to the bid item.
5. Crown shall be widened to accommodate the Metal Beam Guard Fence.
6. The lateral approach to the guard fence, shall have a maximum slope of 1V:10H.
7. If shown elsewhere in the plans or as directed by the Engineer, the guard fence may be flared at a rate of 25:1 or flatter.
8. Unless otherwise shown in the plans, guard fence placed in the vicinity of curbs shall be positioned so that the face of curb is located directly below or behind the face of the rail. Rail placed over curbs shall be installed so that the post bolt is located approximately 25 inches above the gutter pan or edge of shoulder.
9. If solid rock is encountered within 0 to 18" of the finished grade, drill a 22" dia. hole, or drill two 12" dia. front to back overlapping holes, 24" into the rock. If solid rock is encountered below 18", drill a 12" dia. hole, 12" into the rock or to the standard embedment depth, whichever maybe less. Any excess post length, after meeting these depths, may be field cut to ensure proper guardrail mounting height. Backfill with a cohesionless material.
10. Posts shall not be set in concrete, of any depth.
11. Special fabrication will be required at installations having a curvature of less than 150 ft. radius.
12. Unless otherwise shown in the plans, a composite material post and/or block that meets the requirements of DMS-7210, "Composite Material Posts and Blocks for Metal Beam Guard Fence" may be substituted for posts and/or blocks of similar dimensions. The Construction Division, TxDOT maintains a Material Producer List (MPL) for producers of materials conforming to DMS-7210. Only producers on the MPL may furnish composite material posts and/or blocks.
13. For posts located partially or wholly between precast box culvert units, the use of a cast-in-place concrete closure between boxes is required. See Detail "A" on Bridge Standard SCP-MD.

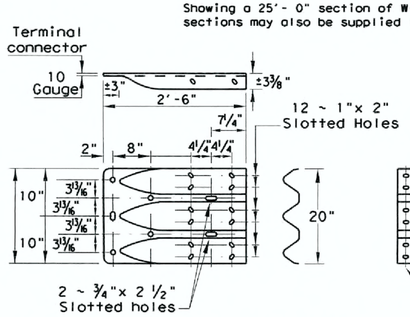

THRIE-BEAM TERMINAL CONNECTION
(SEE GENERAL NOTES 6 & 7 FOR REQUIRED HARDWARE)

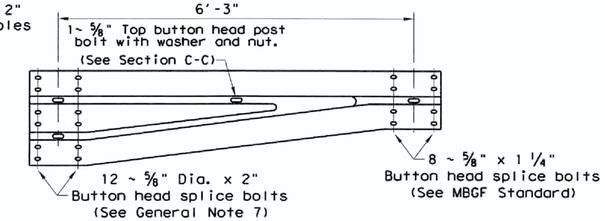

NON-SYMMETRICAL TRANSITION TO W-BEAM (10 Gauge)

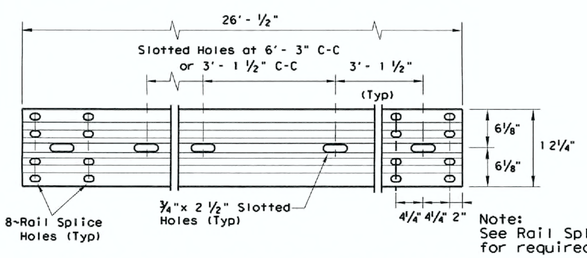

Note:
See Rail Splice Detail for required hardware.

ELEVATION 25'- 0"(NOM.) W-BEAM SECTION
12'- 6" RAIL SECTIONS MAY ALSO BE SUPPLIED (SEE GENERAL NOTE 2)

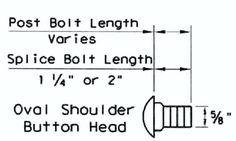

BUTTON HEAD BOLT
Post and Splice Bolts (See General Note 3)

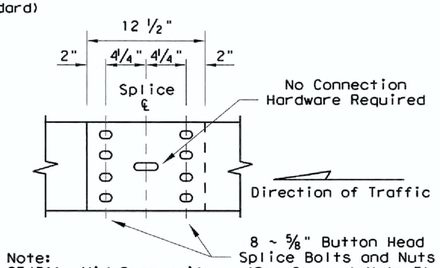

Note:
GF(31), Mid-Span rail splices are required with 6'-3" post spacings.

MID-SPAN
RAIL SPLICE DETAIL

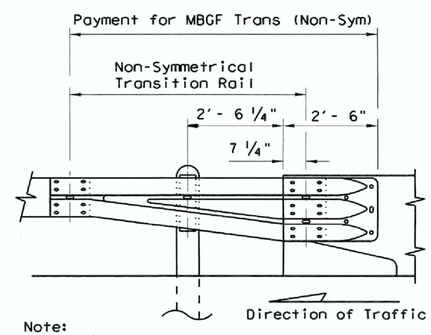

Note:
All rail elements shall be lapped in the direction of adjacent traffic.

DOWNSTREAM RAIL ATTACHMENT

Texas Department of Transportation — Design Division Standard

METAL BEAM GUARD FENCE

GF(31)-14

C-507

FILE: gf3114.dgn	DN: TxDOT	CK: AM	DW: VP	CK: CGL
©TxDOT: December 2011	CONT	SECT	JOB	HIGHWAY
REVISIONS	DIST		COUNTY	SHEET NO.
				46 of 47

DATE:
FILE:

RESTRAINED JOINT CALCULATIONS

Pipe Size	Fitting	Angle (degrees)	Test Pressure (psi)	Required Joint Restraint (ft)	Notes
16"	Horizontal Bend	45	200	22'	
16"	Horizontal Bend	22.5	200	11'	
16"	Horizontal Bend	11.25	200	6'	
16"	Vertical Offset with Symmetrical Return	45	200	93' , 22'	1, 2
16"	Vertical Offset with Symmetrical Return	11.25	200	22' , 6'	1, 2
16"x16"	Tee	0	200	160'	3
16"x12"	Reducer	0	200	68'	6
16"x12"	Tee	0	200	91'	3
16"x6"	Tee	0	200	5'	3
12"x12"	Tee	0	200	123'	3
16"	Dead End	0	200	160'	4, 5

Notes:

1 The joint restraint calculation requires the first length on the upper bends.

2 The joint restraint calculation requires the second length on the lower bends.

3 This assumes that greater than or equal to 10' is restrained on the length along run.

4 This is measured from the end of the line.

5 If two fittings are close enough that adjacent calculated restrained lengths overlap, then restrain all pipe between the two fittings and assume half of the restrained pipe length beween the two fittings acts to resist the thrust force of each fitting.

6 The joint restraint calculation requires the larger sized pipe to be restrained.

Note:

All restrained joints must be greater than or equal to the distances given above. If the required restrained joint length occurs to the middle of a pipe segment, then the contractor shall restrain the next joint beyond the required restraint at no additional cost.

REV NO	REVISION DESCRIPTION	APPROVED BY	DATE

CobbFendley
TBPE NO. 274 / TBPLS NO. 10046701
505 EAST HUNTLAND DRIVE, SUITE 100
AUSTIN, TEXAS 78752
512.834.9798 | FAX 512.834.7727
WWW.COBBFENDLEY.COM

RESTRAINED JOINT CALCULATIONS

HOWARD LANE WATER MAIN EXTENSION
AUSTIN, TX

CITY OF AUSTIN FOUNDED 1839

PROJ. NO. 1712-045-01
DESIGN: K. VAN HOOSIER
DRAWN: K. VAN HOOSIER
CHECK: L. PRINCE
APPR: L. PARISHER
DATE: OCTOBER 5, 2018

STATE OF TEXAS
JAMES LANCE PARISHER
106221
LICENSED
PROFESSIONAL ENGINEER
10/5/2018

THESE DESIGN DOCUMENTS ARE NOT TO BE USED FOR CONSTRUCTION PRIOR TO REGULATORY SIGNATURE AND PERMIT

SHEET
C-508
47 of 47

Dwg Info: G:\CFA\2017\1204501_Howard_Lane_Water_Main\DESIGN\C-501-DETL-COA.dwg – Tab: RJ CALCS – Plotted: 10/5/2018 3:49 PM By: KRISTEN VAN HOOSIER