CITY OF AUSTIN, TEXAS
AUSTIN WATER

HORNSBY BEND BMP CENTRIFUGES

BID SET

MAY 2021

IFB NO. 6100 190000066
C.I.P. ID NO. 3164.077

MAYOR
STEVE ADLER

CITY COUNCIL

NATASHA HARPER-MADISON, DISTRICT 1
VANESSA FUENTES, DISTRICT 2
SABINO RENTERIA, DISTRICT 3
GREGORIO CASAR, DISTRICT 4
ANN KITCHEN, DISTRICT 5
MACKENZIE KELLY, DISTRICT 6
LESLIE POOL, DISTRICT 7
PAIGE ELLIS, DISTRICT 8
KATHIE TOVO, DISTRICT 9
ALISON ALTER, DISTRICT 10

CITY MANAGER
SPENCER CRONK

NOTES:

1. CONTRACTOR SHALL NOTIFY THE CITY OF AUSTIN PUBLIC WORKS DEPARTMENT 24 HOURS PRIOR TO STARTING CONSTRUCTION OR CLEARING OPERATIONS.
2. CONTRACTOR SHALL CALL "ONE CALL" AT 1-800-344-8377 FOR UTILITY LOCATIONS AT LEAST 48 HOURS PRIOR TO ANY WORK IN CITY EASEMENTS OR STREET RIGHTS-OF-WAY.
3. THIS PROJECT IS LOCATED WITHIN THE COLORADO RIVER WATERSHED. THE COLORADO RIVER WATERSHED IS CLASSIFIED AS SUBURBAN (OUTSIDE OF CITY LIMITS). THE PROJECT SHALL BE DEVELOPED, CONSTRUCTED AND MAINTAINED IN ACCORDANCE WITH CHAPTER 25 OF THE CODE OF THE CITY OF AUSTIN.
4. NO PORTION OF THIS SITE IS LOCATED WITHIN PARKLAND OR LAND USED FOR PARK PURPOSES.
5. NO PORTION OF THIS SITE IS INCLUDED WITHIN THE 100-YEAR FLOODPLAIN PER FEDERAL EMERGENCY MANAGEMENT AGENCY FLOOD INSURANCE MAPS.
6. THIS PROJECT IS NOT WITHIN THE EDWARDS AQUIFER RECHARGE ZONE AS DEFINED BY THE CITY OF AUSTIN. THIS PROJECT IS NOT WITHIN THE EDWARDS AQUIFER RECHARGE ZONE AS REGULATED BY THE TEXAS COMMISSION ON ENVIRONMENTAL QUALITY (TCEQ).
7. THERE ARE NO CRITICAL ENVIRONMENTAL FEATURES WITHIN 150 FEET OF ANY PORTION OF THIS PROJECT. A FIELD INVESTIGATION HAS NOT BEEN PERFORMED AS A PART OF THE PROJECT AND IS NOT REQUIRED.
8. THE STANDARD SHEETS INCLUDED IN THIS PLAN SET WERE PROVIDED BY THE GENERAL PERMIT PROGRAM OFFICE FOR USE ON GENERAL PERMIT PROJECTS ONLY. MODIFICATIONS TO THE SHEETS ARE CLEARLY INDICATED ON THE SHEET ITSELF AND IN THE SHEET INDEX.
9. NOT APPLICABLE.
10. PROJECT SCHEDULE MUST BE APPROVED BY THE GENERAL PERMIT PROGRAM (GPP) COORDINATOR. INSTALLATION AND REMOVAL OF TEMPORARY AND PERMANENT EROSION/SEDIMENTATION CONTROLS MUST BE REFLECTED IN THE SCHEDULE, BY STATION NUMBER. GPP REPRESENTATIVE MUST BE NOTIFIED A MINIMUM OF 48 HOURS IN ADVANCE OF TRANSITION BETWEEN PHASES.
11. NOT APPLICABLE.
12. NOT APPLICABLE.

GENERAL PERMIT PROGRAM CORRECTIONS RECORD
FOR USE BY GENERAL PERMIT OFFICE ONLY

NO.	DESCRIPTION	BY	CORRECT (C) ADD (A) VOID (V) SHEET Nos.	TOTAL No. SHEETS IN CORRECTION PLAN SET	GENERAL PERMIT PROGRAM APPROVAL	APPROVAL DATE
1	CONCRETE DRIVEWAY & DETAILS	MM	C-2 (C), C-3 (C), C-7 (A)	7	[illegible]	1/7/2021

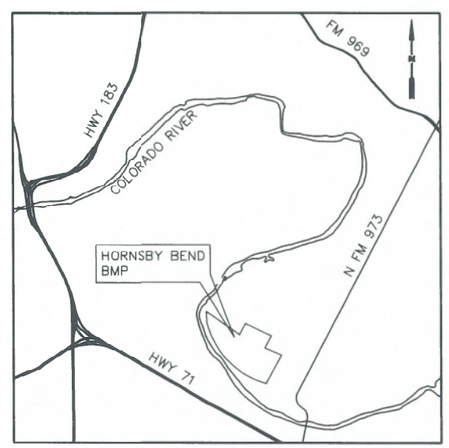

VICINITY MAP
SCALE: NTS

NOTE:
GENERAL PERMIT PROGRAM APPROVAL DOES NOT CONSTITUTE UTILITY ALIGNMENT/ASSIGNMENT APPROVAL.

RELEASE OF THIS APPLICATION DOES NOT CONSTITUTE A VERIFICATION OF ALL DATA, INFORMATION AND CALCULATIONS SUPPLIED BY THE APPLICANT. THE ENGINEER OF RECORD IS SOLELY RESPONSIBLE FOR COMPLETENESS, ACCURACY AND ADEQUACY OF HIS/HER SUBMITTAL, WHETHER OR NOT THE APPLICATION IS REVIEWED FOR CODE COMPLIANCE BY CITY ENGINEERS.

STATE OF TEXAS
LINDSAY C. WEBB
110398
LICENSED
PROFESSIONAL ENGINEER

SUBMITTED FOR APPROVAL BY:

Lindsay Webb — 05/26/21
LINDSAY C. WEBB, P.E., ENGINEER OF RECORD — DATE

APPROVALS:

Jules Parrish — Digitally signed by Jules Parrish DN: C=US, E=jules.parrish@austintexas.gov, O=City of Austin, OU=Public Works, CN=Jules Parrish Date: 2021.05.19 15:10:05-05'00'
JULES PARRISH, PUBLIC WORKS DEPARTMENT, PROJECT MANAGEMENT DIVISION — DATE

John Mitchell — 5-18-21.
JOHN MITCHELL, P.E., AUSTIN WATER, FACILITY ENGINEERING DIVISION — DATE

GENERAL PERMIT

GP-2017-0212.AW
GENERAL PERMIT NUMBER

8/27/17
GENERAL PERMIT ORIGINAL SUBMITTAL DATE

PROJECT INFORMATION:

STREET ADDRESS:
HORNSBY BEND
BIOSOLIDS MANAGEMENT PLANT
2210 FM 973
AUSTIN, TX 78725

OWNER:
AUSTIN WATER
CITY OF AUSTIN
P.O. BOX 1088
AUSTIN, TX 78767

PUBLIC WORKS CONTACT:
JULES PARRISH
CITY OF AUSTIN | PUBLIC WORKS DEPARTMENT
6800 BURLESON ROAD, BUILDING 312, SUITE 200
AUSTIN, TX 78744

AUSTIN WATER CONTACT:
JOHN MITCHELL, PE
HORNSBY BEND
BIOSOLIDS MANAGEMENT PLANT
2210 FM 973
AUSTIN, TX 78725

PREPARED BY:

CP&Y, INC.
CHASE BANK BUILDING
TOWER OF THE HILLS
13809 RESEARCH BLVD., SUITE 300
AUSTIN, TX 78750
(512) 349-0700
TBPE REGISTRATION NO. F-1741

IN ASSOCIATION WITH:
AZCARATE & ASSOCIATES CONSULTING ENGINEERS, LLC
TBPE REGISTRATION NO. F-10804
CAS CONSULTING & SERVICES, INC.
TBPE REGISTRATION NO. F-003572

CP&Y, INC.
TBPE FIRM REGISTRATION NO. F-1741

NO.	REVISION	BY	DATE

VERIFY SCALE 0 1" BAR IS ONE INCH ON ORIGINAL DRAWING. IF NOT ONE INCH ON THIS SHEET, ADJUST SCALE

CITY OF AUSTIN – AUSTIN WATER
HORNSBY BEND BMP CENTRIFUGES
COVER SHEET

Date: MAY 2021
Designed: P.VILLARREAL
Drawn: S.MEDINA
Reviewed: L.WEBB
CP&Y Proj. AUST1600646.01

SHEET
G-1

REFERENCES: AUST1600646.01 Border Base.dwg, _Std ENVIRO SEALS
May 14, 2021 – 2:19pm C:\pwworking\city\cpy-sp\profiles\d0795251\AUST1600646.01_1_G-1_CPY.dwg

SHEET	SEQ. NO.	SHEET TITLE
GENERAL		
G-1	1	COVER SHEET
G-2	2	SHEET INDEX
G-3	3	GENERAL NOTES
G-4	4	GENERAL ABBREVIATIONS, DRAFTING SYMBOLS & DRAWING LEGEND
CIVIL		
C-1	5	ACCESS ROUTE
C-2	6	SITE PLAN
C-3	7	EROSION CONTROL AND LIMITS OF CONSTRUCTION
C-4	8	EROSION / SEDIMENTATION CONTROL
C-5	9	TREE PROTECTION AND ENVIRONMENTAL NOTES
C-6	10	CIVIL DETAILS
C-7	11	CIVIL DETAILS II
ARCHITECTURAL		
A-1	12	ARCHITECTURAL DRAFTING SYMBOLS & DRAWING LEGEND
A-2	13	ARCHITECTURAL EXISTING & DEMOLITION PLAN
A-3	14	ARCHITECTURAL PROPOSED FLOOR PLAN
A-4	15	ARCHITECTURAL ELEVATIONS & DETAILS
A-5	16	ARCHITECTURAL SECTIONS & DETAILS
STRUCTURAL		
S-1	17	STRUCTURAL NOTES, ABBREVIATIONS, SYMBOLS, & LEGEND (1 OF 2)
S-2	18	STRUCTURAL NOTES, ABBREVIATIONS SYMBOLS, & LEGEND (2 OF 2)
S-3	19	STRUCTURAL DEMOLITION PLAN I
S-4	20	STRUCTURAL DEMOLITION PLAN II
S-5	21	STRUCTURAL DEMOLITION – SECTIONS
S-6	22	STRUCTURAL PLAN
S-7	23	CENTRIFUGE FOUNDATION PLANS
S-8	24	STRUCTURAL DETAILS I
S-9	25	STRUCTURAL DETAILS II
S-10	26	STRUCTURAL STANDARD DETAILS I
MECHANICAL		
M-1	27	MECHANICAL NOTES, SCHEDULES, SYMBOLS, & LEGENDS
M-2	28	MECHANICAL DEMOLITION PLAN I
M-3	29	MECHANICAL DEMOLITION PLAN II
M-4	30	THICKENER COMPLEX INTERIOR DRAINAGE PLAN
M-5	31	MECHANICAL PLAN
M-6	32	MECHANICAL SECTION
M-7	33	NPW PLAN AND SECTION
M-8	–	NOT USED
M-9	34	MECHANICAL DETAILS I
M-10	35	MECHANICAL DETAILS II
M-11	36	MECHANICAL DETAILS III
M-12	37	CENTRIFUGE SOLIDS CHUTE SHOP DRAWINGS
M-13	38	CENTRIFUGE CENTRATE CHUTE SHOP DRAWING
M-14	39	CENTRIFUGE SOLIDS AND CENTRATE CHUTE SUPPORTS SHOP DRAWINGS
HVAC		
H-1	40	HVAC LEGENDS & SYMBOLS
H-2	41	HVAC OVERALL FLOOR PLAN MODIFICATIONS
H-3	42	HVAC ENLARGED PLAN MODIFICATIONS
H-4	43	HVAC DETAILS I
H-5	44	HVAC DETAILS II
ELECTRICAL		
E-1	45	ELECTRICAL NOTES, ABBREVIATIONS, SYMBOLS & LEGENDS
E-2	46	ELECTRICAL SITE PLAN MODIFICATIONS
E-3	47	THICKENER COMPLEX ELECTRICAL DEMOLITION PLAN
E-4	48	EAST ELECTRICAL ROOM & CONTROL ROOM DEMOLITION PLAN
E-5	49	ELECTRICAL CABLE AND CONDUIT SCHEDULES (SHEET 1 OF 2)
E-6	50	ELECTRICAL CABLE AND CONDUIT SCHEDULES (SHEET 2 OF 2)
E-7	51	ELECTRICAL ONE-LINE DIAGRAM MCC-T1 DEMOLITION
E-8	52	ELECTRICAL ONE-LINE DIAGRAM MCC-T2 DEMOLITION
E-9	53	EXISTING MCC-T5 ONE-LINE DIAGRAM
E-10	54	MODIFIED MCC-T1 ONE-LINE DIAGRAM
E-11	55	MODIFIED MCC-T2 ONE-LINE DIAGRAM
E-12	56	PROPOSED MCC-T6 ONE-LINE DIAGRAM
E-13	57	MODIFIED MCC-T5 ONE-LINE DIAGRAM
E-14	58	MCC FRONT ELEVATIONS MCC-T1 DEMOLITION AND MODIFICATIONS
E-15	59	MCC FRONT ELEVATIONS MCC-T2 DEMOLITION AND MODIFICATIONS
E-16	60	MCC FRONT ELEVATION PROPOSED MCC-T6
E-17	61	MCC FRONT ELEVATION PROPOSED MCC-T5
E-18	62	THICKENER COMPLEX POWER FLOOR PLAN MODIFICATIONS
E-19	63	EAST ELECTRICAL ROOM POWER PLAN MODIFICATIONS
E-20	64	CENTRIFUGE THICKENING SYSTEM POWER PLAN
E-21	65	WEST ELECTRICAL ROOM POWER PLAN
E-22	66	THICKENER COMPLEX CONTROL FLOOR PLAN MODIFICATIONS
E-23	67	EAST ELECTRICAL ROOM CONTROL PLAN MODIFICATIONS
E-24	68	CENTRIFUGE THICKENING SYSTEM CONTROL PLAN
E-25	69	WEST ELECTRICAL ROOM CONTROL PLAN
E-26	70	ELELCTRICAL CONTROLS BLOCK DIAGRAMS (SHEET 1 OF 2)
E-27	71	ELECTRICAL CONTROLS BLOCK DIAGRAMS (SHEET 2 OF 2)
E-28	72	ELECTRICAL CONTROL LOGIC (SHEET 1 OF 2)
E-29	73	ELECTRICAL CONTROL LOGIC (SHEET 2 OF 2)
E-30	74	INTERCONNECTION DIAGRAM (SHEET 1 OF 10)
E-31	75	INTERCONNECTION DIAGRAM (SHEET 2 OF 10)
E-32	76	INTERCONNECTION DIAGRAM (SHEET 3 OF 10)
E-33	77	INTERCONNECTION DIAGRAM (SHEET 4 OF 10)
E-34	78	INTERCONNECTION DIAGRAM (SHEET 5 OF 10)
E-35	79	INTERCONNECTION DIAGRAM (SHEET 6 OF 10)
E-36	80	INTERCONNECTION DIAGRAM (SHEET 7 OF 10)
E-37	81	INTERCONNECTION DIAGRAM (SHEET 8 OF 10)
E-38	82	INTERCONNECTION DIAGRAM (SHEET 9 OF 10)
E-39	83	INTERCONNECTION DIAGRAM (SHEET 10 OF 10)
E-40	84	PANEL SCHEDULE – FIXTURE SCHEDULE (SHEET 1 OF 2)
E-41	85	PANEL SCHEDULE – FIXTURE SCHEDULE (SHEET 2 OF 2)
E-42	86	ELECTRICAL DETAILS (SHEET 1 OF 2)
E-43	87	ELECTRICAL DETAILS (SHEET 2 OF 2)
INSTRUMENTATION		
I-1	88	INSTRUMENTATION ABBREVIATIONS AND LEGEND
I-2	89	SCADA ONE-LINE DIAGRAM – PROPOSED
I-3	90	CENTRIFUGE NO. 1 PROCESS MECHANICAL AND INSTRUMENTATION DIAGRAM
I-4	91	CENTRIFUGE NO. 2 PROCESS MECHANICAL AND INSTRUMENTATION DIAGRAM
I-5	92	CENTRIFUGE PROCESS AND INSTRUMENTATION LOOP DIAGRAM
I-6	93	CENTRIFUGE CONTROL PANEL NETWORK DIAGRAM, NETWORK RACK AND PQM LOOP DIAGRAM
I-7	94	LPU-1 DEMOLITION PLAN
I-8	95	LPU-1 PLAN
I-9	96	INSTRUMENTATION DETAILS I
I-10	97	INSTRUMENTATION DETAILS II
REFERENCE DRAWINGS		
R-1	98	THICKENER COMPLEX PIPING SCHEMATIC
R-2	99	EXISTING INSTRUMENTATION LOOP DIAGRAM I
R-3	100	EXISTING INSTRUMENTATION LOOP DIAGRAM II
R-4	101	EXISTING INSTRUMENTATION LOOP DIAGRAM III
R-5	102	EXISTING INSTRUMENTATION LOOP DIAGRAM IV

REFERENCES: AUST1600646.01 Border Base.dwg _Std ENVIRO SEALS
May 24, 2021 – 11:30am C:\pwworking\cpy\pw_cpy\pvillarreal\d0795251\AUST1600646.01_1_G-2_CPY.dwg

CP&Y, INC.
TBPE FIRM REGISTRATION NO. F-1741

CITY OF AUSTIN EST. 1839 FOUNDED

STATE OF TEXAS
LINDSAY C. WEBB
110398
LICENSED PROFESSIONAL ENGINEER
05/24/21

NO.	REVISION	BY	DATE

VERIFY SCALE 0 1" BAR IS ONE INCH ON ORIGINAL DRAWING. IF NOT ONE INCH ON THIS SHEET, ADJUST SCALE

CITY OF AUSTIN – AUSTIN WATER
HORNSBY BEND BMP CENTRIFUGES

SHEET INDEX

Date: MAY 2021
Designed: P.VILLARREAL
Drawn: S.MEDINA
Reviewed: L.WEBB
CP&Y Proj: AUST1600646.01

SHEET
G-2

STANDARD SITE PLAN NOTES

ORDINANCE REQUIREMENTS

1. ALL IMPROVEMENTS SHALL BE MADE IN ACCORDANCE WITH THE RELEASED SITE PLAN. ANY ADDITIONAL IMPROVEMENTS WILL REQUIRE A SITE PLAN AMENDMENT AND APPROVAL FROM THE WATERSHED PROTECTION AND DEVELOPMENT REVIEW DEPARTMENT; MINOR CORRECTIONS MAY BE APPROVED BY THE BUILDING PLAN REVIEW SECTION AT THE TIME OF BUILDING PERMIT.
2. APPROVAL OF THIS SITE PLAN DOES NOT INCLUDE BUILDING CODE APPROVAL; FIRE CODE APPROVAL; OR BUILDING, DEMOLITION, OR RELOCATION PERMITS APPROVAL. A CITY DEMOLITION OR RELOCATION PERMIT CAN ONLY BE ISSUED ONCE THE HISTORIC REVIEW PROCESS IS COMPLETED.
3. ALL SIGNS MUST COMPLY WITH THE REQUIREMENTS OF THE LAND DEVELOPMENT CODE.
4. A DEVELOPMENT PERMIT MUST BE ISSUED PRIOR TO AN APPLICATION FOR BUILDING PERMIT FOR NON–CONSOLIDATED OR PLANNING COMMISSION APPROVED SITE PLANS.

GENERAL CONSTRUCTION NOTES

1. ALL RESPONSIBILITY FOR THE ADEQUACY OF THESE PLANS REMAINS WITH THE ENGINEER WHO PREPARED THEM. IN REVIEWING THESE PLANS, THE CITY OF AUSTIN MUST RELY ON THE ADEQUACY OF THE WORK OF THE DESIGN ENGINEER.
2. CONTRACTOR SHALL CALL THE ONE CALL CENTER (1–800–344–8377) FOR UTILITY LOCATIONS PRIOR TO ANY WORK IN CITY EASEMENTS OR STREET RIGHT–OF–WAY.
3. CONTRACTOR SHALL NOTIFY THE PUBLIC WORKS DEPARTMENT AT (512) 974–7161 AT LEAST 24 HOURS PRIOR TO THE INSTALLATION OF ANY DRAINAGE FACILITY WITHIN A DRAINAGE EASEMENT OR STREET RIGHT–OF–WAY. THE METHOD OF PLACEMENT AND COMPACTION OF BACKFILL IN THE CITY'S RIGHT–OF–WAY MUST BE APPROVED PRIOR TO THE START OF BACKFILL OPERATIONS.
4. FOR SLOPES OR TRENCHES GREATER THAN FIVE FEET IN DEPTH, A NOTE MUST BE ADDED STATING: "ALL CONSTRUCTION OPERATIONS SHALL BE ACCOMPLISHED IN ACCORDANCE WITH APPLICABLE REGULATIONS OF THE U.S. OCCUPATIONAL SAFETY AND HEALTH ADMINISTRATION." (OSHA STANDARDS MAY BE PURCHASED FROM THE GOVERNMENT PRINTING OFFICE; INFORMATION AND RELATED REFERENCE MATERIALS MAY BE PURCHASED FROM OSHA, 611 EAST 6TH STREET, AUSTIN, TEXAS 78701.)
5. ALL SITE WORK MUST ALSO COMPLY WITH ENVIRONMENTAL REQUIREMENTS.
6. UPON COMPLETION OF THE PROPOSED SITE IMPROVEMENTS AND PRIOR TO THE FOLLOWING, THE ENGINEER SHALL CERTIFY IN WRITING THAT THE PROPOSED DRAINAGE FACILITIES WERE CONSTRUCTED IN CONFORMANCE WITH THE APPROVED PLANS:
   - RELEASE OF THE CERTIFICATE OF OCCUPANCY BY THE WATERSHED PROTECTION AND DEVELOPMENT REVIEW DEPARTMENT (INSIDE THE CITY LIMITS); OR
   - INSTALLATION OF AN ELECTRIC OR WATER METER (IN THE FIVE–MILE ETJ).

DEVELOPER INFORMATION

OWNER: CITY OF AUSTIN, AUSTIN WATER PHONE # (512) 974–7216

OWNER'S REPRESENTATIVE RESPONSIBLE FOR PLAN ALTERATIONS:

LINDSAY WEBB (CP&Y, INC.) TOWER OF THE HILLS, CHASE BANK BUILDING 13809 RESEARCH BLVD, SUITE 300 AUSTIN, TX 78750

PHONE# (512) 349–0700

PERSON OR FIRM RESPONSIBLE FOR EROSION/SEDIMENTATION CONTROL MAINTENANCE:

GENERAL CONTRACTOR OR SUBCONTRACTOR

PERSON OR FIRM RESPONSIBLE FOR TREE/NATURAL AREA PROTECTION MAINTENANCE:

NOT APPLICABLE

AUSTIN WATER UTILITY GENERAL CONSTRUCTION NOTES

1. THE CITY STANDARD CONSTRUCTION SPECIFICATIONS CURRENT AT THE TIME OF BIDDING SHALL COVER MATERIAL AND METHODS USED TO DO THIS WORK.
2. CONTRACTOR MUST OBTAIN A STREET CUT PERMIT FROM WATERSHED PROTECTION AND DEVELOPMENT REVIEW DEPARTMENT, RIGHT–OF–WAY MANAGEMENT DIVISION BEFORE BEGINNING CONSTRUCTION WITHIN THE RIGHT–OF–WAY OF A PUBLIC STREET OR ALLEY.
3. AT LEAST 48 HOURS BEFORE BEGINNING ANY WATER AND WASTEWATER CONSTRUCTION IN PUBLIC R.O.W. OR PUBLIC EASEMENT, THE CONTRACTOR SHALL NOTIFY WATERSHED PROTECTION AND DEVELOPMENT REVIEW INSPECTION OR WATER AND WASTEWATER UTILITY TAPS INSPECTION AT THE NUMBER INDICATED ON THE PLANS BY THE AWU PLAN REVIEWER.
4. THE CONTRACTOR SHALL CONTACT THE AUSTIN AREA "ONE CALL" SYSTEM AT 1–800–344–8377 FOR EXISTING UTILITY LOCATIONS PRIOR TO ANY EXCAVATION IN ADVANCE OF CONSTRUCTION. THE CONTRACTOR SHALL VERIFY THE LOCATIONS OF ALL UTILITIES TO BE EXTENDED, TIED TO, OR ALTERED, OR SUBJECT TO DAMAGE/INCONVENIENCE BY THE CONSTRUCTION OPERATIONS. THE CITY OF AUSTIN WATER AND WASTEWATER MAINTENANCE RESPONSIBILITY ENDS AT R.O.W./EASEMENT LINES.
5. NO OTHER UTILITY SERVICE/APPURTENANCES SHALL BE PLACED NEAR THE PROPERTY LINE, OR OTHER ASSIGNED LOCATION DESIGNATED FOR WATER AND WASTEWATER UTILITY SERVICE THAT WOULD INTERFERE WITH THE WATER AND WASTEWATER SERVICES.
6. THE CITY SPECIFICATION ITEM 509S WILL BE REQUIRED AS A MINIMUM TRENCH SAFETY MEASURE.
7. ALL MATERIALS TESTS, INCLUDING SOIL DENSITY TESTS AND DETAILED SOIL ANALYSES, WILL BE CONDUCTED BY AN INDEPENDENT LABORATORY AND FUNDED BY THE OWNER IN ACCORDANCE WITH CITY STANDARD SPECIFICATION ITEM 1804S.04.
8. PRESSURE TAPS SHALL BE IN ACCORDANCE WITH CITY STANDARD SPECIFICATION ITEM 510.3(24). THE CONTRACTOR SHALL PERFORM EXCAVATION ETC., AND SHALL FURNISH, INSTALL AND AIR TEST THE SLEEVE AND VALVE. WHEN CONTRACTOR MAKES THE TAP A CITY INSPECTOR MUST BE PRESENT AND 2 WORKING DAYS (MIN.) NOTICE MUST BE GIVEN TO THE CITY PRIOR TO MAKING THE TAP. "SIZE ON SIZE" TAPS WILL NOT BE PERMITTED, UNLESS, IT HAS BEEN DEMONSTRATED THAT A MORE ACCEPTABLE CONNECTION WOULD INVOLVE CONSIDERABLE HARDSHIP TO THE UTILITY SYSTEM. ALL TAPS SHALL BE MADE BY USE OF AN APPROVED FULL CIRCLE–GASKETED CAST IRON OR DUCTILE IRON TAPPING SLEEVE. CONCRETE BLOCKING SHALL BE PLACED UNDER ALL TAP SLEEVES PRIOR TO MAKING THE PRESSURE TAP AND THE USE OF PRECAST BLOCKS MAY BE USED TO HOLD THE TAP IN ITS CORRECT POSITION PRIOR TO BLOCKING. THE BLOCKING BEHIND AND UNDER THE TAP SHALL HAVE A MINIMUM OF 24 HOURS CURING TIME BEFORE THE VALVE CAN BE RE–OPENED FOR SERVICE FROM THAT TAP.
9. THRUST RESTRAINT SHALL BE IN ACCORDANCE WITH CITY STANDARD SPECIFICATION ITEM 510.3 (22).
10. ALL BRANCH CONNECTIONS SHALL HAVE THE VALVE BOLTED TO THE MAIN BY METHODS OF FLANGE OR SWIVEL TEES. FOSTER ADAPTORS MAY BE USED IN LIEU OF FLANGE OR SWIVEL TEES WHEN CALLED OUT ON THE PLANS BY THE DESIGN ENGINEER.
11. A) FIRE HYDRANTS SHALL BE SET IN ACCORDANCE WITH CITY STANDARD SPECIFICATION ITEM 511S.4.

    B) FIRE HYDRANTS SHALL BE PAINTED FLYNT ALUMINUM OR EQUAL.
12. WATER LINE TESTING AND STERILIZATION SHALL BE PERFORMED IN ACCORDANCE WITH CITY STANDARD SPECIFICATION ITEMS 510.3 (27)–(29). FORCE MAIN PRESSURE TESTING SHALL BE CONDUCTED AND FALL UNDER THE SPECIFICATIONS AS WATER LINES (PRESSURE PIPE) OR AT THE PRESSURES SHOWN ON THE APPROVED PLANS.
13. ALL MATERIAL USED ON THIS PROJECT MUST BE LISTED ON THE STANDARD PRODUCTS LISTING. ANY MATERIAL NOT LISTED HAS TO GO THROUGH THE REVIEW OF THE STANDARDS COMMITTEE FOR REVIEW AND APPROVAL PRIOR TO START OF PROJECT. TESTING AND EVALUATION OF PRODUCTS ARE REQUIRED BEFORE APPROVAL WILL BE GIVEN ANY CONSIDERATION.
14. WHEN WATER SERVICES ARE DAMAGED AND THE SERVICE MATERIAL IS POLYETHYLENE (PE), THE LINE SHALL BE REPAIRED ONLY BY HEAT FUSION WELD OR REPLACED THE FULL LENGTH WITH TYPE K COPPER MATERIAL. ANY TIME POLYBUTYLENE (PB) IS DAMAGED OR TAMPERED WITH IN ANY WAY, THE SERVICE LINE SHALL BE REPLACED FULL LENGTH WITH TYPE K COPPER MATERIAL. NOTE: FULL LENGTH IS FROM CORPORATION STOP TO METER.
15. WHEN AN EXISTING WATERLINE SHUT OUT IS NECESSARY AND POSSIBLE, THE CONTRACTOR SHALL NOTIFY THE CONSTRUCTION INSPECTOR WHO WILL THEN NOTIFY THE AUSTIN WATER DISPATCH AND THE AFFECTED CUSTOMERS A MINIMUM OF SEVENTY–TWO (72) HOURS IN ADVANCE. REMOVE EXISTING STRUCTURES PER PLAN.
16. THE CONTRACTOR SHALL NOTIFY THE CONSTRUCTION INSPECTOR SO THAT HE CAN NOTIFY THE AUSTIN WATER AT 512–972–0000 AT A MINIMUM OF 72 HOURS PRIOR TO RELOCATING ANY DOMESTIC OR FIRE DEMAND WATER METERS. THE CONTRACTOR SHALL CAREFULLY REMOVE ALL METERS AND METERS BOXES THAT ARE INDICATED TO BE RELOCATED OR SALVAGED. THE CONTRACTOR SHALL INSTALL THE REMOVED METER OR CITY PROVIDED METER AT THE NEW LOCATION INDICATED ON THE CONSTRUCTION PLANS.
17. ALL MANHOLES IN UNPAVED AREAS PROVIDING DIRECT ACCESS TO A WASTEWATER LINE SHALL BE WATERTIGHT AND BEAR THE WORDING AND INSIGNIA FOR THE CITY OF AUSTIN.
18. THE CONTRACTOR SHALL VERIFY ALL VERTICAL AND HORIZONTAL LOCATIONS OF EXISTING UTILITIES PRIOR TO FABRICATING THE PIPE AND STARTING ONSITE UTILITY WORK.
19. ALL RESPONSIBILITY FOR THE ADEQUACY OF THESE PLANS REMAINS WITH THE ENGINEER WHO PREPARED THEM. APPROVAL OF THESE PLANS BY THE CITY OF AUSTIN DOES NOT REMOVE THESE RESPONSIBILITIES.
20. REVIEW BY THE AUSTIN WATER APPLIES ONLY TO FACILITIES WITHIN PUBLIC STREETS OR PUBLIC UTILITY EASEMENTS. ALL OTHER WATER AND WASTEWATER FACILITIES INSIDE PRIVATE PROPERTY ARE UNDER THE JURISDICTION OF BUILDING INSPECTION.
21. ALL WATER AND WASTEWATER MAINS SHALL BE INSTALLED IN ACCORDANCE WITH THE SEPARATION DISTANCES INDICATED IN CHAPTER 290 – DRINKING WATER STANDARDS, AND CHAPTER 217 – DESIGN CRITERIA FOR SEWERAGE SYSTEMS, OF TCEQ RULES.
22. CONTRACTOR'S PERSONNEL THAT PERFORM BUTT FUSION AND ELECTROFUSION ON OR TO HDPE PIPE AND FITTINGS MUST HAVE CURRENT QUALIFICATION TRAINING CERTIFICATE ISSUED BY MCELROY OR COMPARABLE TRAINING PROGRAM.
23. SHOP DRAWINGS SHALL BE SUBMITTED FOR AWU APPROVAL FOR LARGE DIAMETER PRE–CAST MANHOLES, JUNCTION BOXES, WET WELLS, AND SIMILAR STRUCTURES. THE SHOP DRAWINGS SHALL INCLUDE FLOWLINE ELEVATIONS OF ALL INCOMING AND OUTGOING PIPES, ELEVATION OF TRANSITION FROM LARGE DIAMETER SECTIONS TO 48" ID SECTION, TOP OF MANHOLE ELEVATION, SURROUNDING GROUND ELEVATION, AS WELL AS SPECIAL CONSTRUCTION CONSIDERATIONS THAT ARE SPECIFIED IN THE CONTRACT DRAWINGS.
24. VALVE STEM EXTENSIONS SHALL CONSIST OF A SINGLE PIECE OF IRON ROD OF THE REQUIRED LENGTH WITH A SOCKET ON ONE END AND NUT ON THE OTHER.
25. ASBESTOS CONCRETE PIPE (AC PIPE) HAS BEEN INSTALLED IN THE PAST AS PART OF AUSTIN WATER'S WATER DISTRIBUTION AND WASTEWATER COLLECTION SYSTEMS. AUSTIN WATER'S INFRASTRUCTURE INCLUDES AC PIPE THAT IS CURRENTLY IN SERVICE AS WELL AS AC PIPE THAT HAS BEEN ABANDONED AND IS NO LONGER IN SERVICE. RECORD INFORMATION MAY NOT BE COMPLETE IN YOUR PROJECT AREA. CONTRACTORS AND SUBCONTRACTORS MUST BE ALERT TO THE PRESENCE OF AC PIPE AND BE KNOWLEDGEABLE OF HOW TO IDENTIFY IT. DISTURBANCE, REMOVAL OR CUTTING OF ASBESTOS CONTAINING PIPE IS TO BE CONDUCTED IN ACCORDANCE WITH THE REQUIREMENTS OF TEXAS ADMINISTRATIVE CODE 25, SECTION 15, ARTICLE 4477–3A AND 29 CFR 1926.1101. REFERENCE STANDARD SPECIFICATION SECTION 01901. CONTACT THE CITY OF AUSTIN ASBESTOS MANAGER AT 512–974–7154 THIRTY (30) DAYS PRIOR TO THE PLANNED DISTURBANCE OF THE AC PIPE. ONLY LICENSED PERSONNEL ARE PERMITTED TO DISTURB, REMOVE, TRANSPORT AND DISPOSE OF AC PIPE.

TRENCH SAFETY NOTES:

1. IN ACCORDANCE WITH THE LAWS OF THE STATE OF TEXAS AND THE U.S. OCCUPATIONAL SAFETY AND HEALTH ADMINISTRATION REGULATIONS, ALL TRENCHES OVER 5 FEET IN DEPTH IN EITHER HARD AND COMPACT OR SOFT AND UNSTABLE SOIL SHALL BE SLOPED, SHORED, SHEETED, BRACED OR OTHERWISE SUPPORTED. FURTHERMORE, ALL TRENCHES LESS THAN 5 FEET IN DEPTH SHALL ALSO BE EFFECTIVELY PROTECTED WHEN HAZARDOUS GROUND MOVEMENT MAY BE EXPECTED. TRENCH SAFETY SYSTEMS TO BE UTILIZED FOR THIS PROJECT SHALL BE DESIGNED/PROVIDED BY THE CONTRACTOR.
2. IN ACCORDANCE WITH THE U.S. OCCUPATIONAL SAFETY AND HEALTH ADMINISTRATION REGULATIONS, WHEN PERSONS ARE IN TRENCHES 4 FEET DEEP OR MORE, ADEQUATE MEANS OF EXIT, SUCH AS A LADDER OR STEPS, SHALL BE PROVIDED AND LOCATED SO AS TO REQUIRE NO MORE THAN 25 FEET OF LATERAL TRAVEL.
3. IF TRENCH SAFETY SYSTEM DETAILS WERE NOT PROVIDED IN THE PLANS BECAUSE TRENCHES WERE ANTICIPATED TO BE LESS THAN 5 FEET IN DEPTH AND DURING CONSTRUCTION IT IS FOUND THAT TRENCHES ARE IN FACT 5 FEET OR MORE IN DEPTH OR TRENCHES LESS THAN 5 FEET IN DEPTH ARE IN AN AREA WHERE HAZARDOUS GROUND MOVEMENT IS EXPECTED, ALL CONSTRUCTION SHALL CEASE, THE TRENCHED AREA SHALL BE BARRICADED AND THE ENGINEER NOTIFIED IMMEDIATELY. CONSTRUCTION SHALL NOT RESUME UNTIL APPROPRIATE TRENCH SAFETY SYSTEM DETAILS, AS DESIGNED BY A PROFESSIONAL ENGINEER UNDER THE CONTRACTOR, ARE RETAINED AND COPIES SUBMITTED TO THE CITY OF AUSTIN.

CP&Y, INC.
TBPE FIRM REGISTRATION NO. F–1741

CITY OF AUSTIN – AUSTIN WATER
HORNSBY BEND BMP CENTRIFUGES

GENERAL NOTES

NO.	REVISION	BY	DATE

VERIFY SCALE 0 1" BAR IS ONE INCH ON ORIGINAL DRAWING. IF NOT ONE INCH ON THIS SHEET, ADJUST SCALE

Date: MAY 2021
Designed: P.VILLARREAL
Drawn: S.MEDINA
Reviewed: L.WEBB
CP&Y Proj. AUST1600646.01

SHEET
G–3

REFERENCES: AUST1600646.01 Border Base.dwg _Std ENVIRO SEALS
May 14, 2021 – 2:14pm C:\pwworking\cpy\gw_cpy\pvillarreal\d0795251\AUST1600646.01_1_G-3_CPY.dwg

ITEM	DESCRIPTION
@	AT
AB	ANCHOR BOLT
ACI	AMERICAN CONCRETE INSTITUTE
ADJ	ADJUSTABLE
AGGR	AGGREGATE
AISC	AMERICAN INSTITUTE OF STEEL CONSTRUCTION
ALUM	ALUMINUM
ALT	ALTERNATE
ANDZ	ANODIZE
ANSI	AMERICAN NATIONAL STANDARDS INSTITUTE
API	AMERICAN PETROLEUM INSTITUTE
ARCH	ARCHITECTURAL
ASCE	AMERICAN SOCIETY OF CIVIL ENGINEERS
ASHRAE	AMERICAN SOCIETY OF HEATING, REFRIGERATING & AIR CONDITIONING ENGINEERS
ASME	AMERICAN SOCIETY OF MECHANICAL ENGINEERS
ASTM	AMERICAN SOCIETY OF TESTING & MATERIALS
AWS	AMERICAN WELDING SOCIETY
AWWA	AMERICAN WATER WORKS ASSOCIATION
AUTO	AUTOMATIC
AUX	AUXILIARY
AVG	AVERAGE
BC	BACK OF CURB
BF	BLIND FLANGE
BFP	BACKFLOW PREVENTER
BFV	BUTTERFLY VALVE
BLDG	BUILDING
BM	BENCHMARK
BOT	BOTTOM
BRC	BRIDGE CRANE
BV	BALL VALVE
BWCP	BAR WRAPPED CONCRETE CYLINDER PIPE
C	CHANNEL (BEAM), CENTRATE
CAB	CABINET
CC	CONCENTRIC
CE	CENTRIFUGE
CEIL	CEILING
CFM	CUBIC FEET PER MINUTE
CFS	CUBIC FEET PER SECOND
CHEM	CHEMICAL
CJ	CONSTRUCTION JOINT
CLO	CLOSET
CLR	CLEAR
℄	CENTERLINE
CMU	CONCRETE MASONRY UNIT
CO	CLEANOUT
COL	COLUMN
CONC	CONCRETE
CONT	CONTINUOUS
COORD	COORDINATE
CPLG	COUPLING
CRS	COLD ROLLED STEEL
CTR	CENTER
CF, CU FT	CUBIC FOOT
CU IN	CUBIC INCH
CV	CHECK VALVE
CY, CU YD	CUBIC YARD
°C	DEGREE CENTIGRADE
D	PENNY (NAIL SIZE), DRAIN
DBL	DOUBLE
DET	DETAIL
DI	DUCTILE IRON
ø, DIA	DIAMETER
DIST	DISTRIBUTION
DSP	DISTRIBUTION PUMP
DWG	DRAWING
E	EAST
EA	EACH
EC	ECCENTRIC
EF	EACH FACE
EFF	EFFLUENT
EL, ELEV	ELEVATION
ELB	ELBOW
ELEC	ELECTRICAL
EMB	EMBEDMENT
ENGR	ENGINEER
E/S	EROSION/SEDIMENTATION
EQPT	EQUIPMENT
EW	EACH WAY
EWEF	EACH WAY EACH FACE
EX, EXIST	EXISTING
EXH	EXHAUST
EXP	EXPANSION
EXP AB	EXPANSION ANCHOR BOLT
EXP JT	EXPANSION JOINT
F	FILTRATE
FC	FLEXIBLE COUPLING
FCA	FLANGED COUPLING ADAPTER
FD	FLOOR DRAIN
FDA	FLOOR DRAIN W/INTERNAL TRAP
FDN	FOUNDATION
FEB	FLOW EQUALIZATION BASIN

ITEM	DESCRIPTION
FF	FINISHED FLOOR
FG	FINISHED GRADE
FH	FIRE HYDRANT
FIG	FIGURE
FIN	FINISH
FIT	FLOW INDICATING TRANSMITTER
FL	FLOWLINE, FLOOR
FLG	FLANGE
FLH	FLAT HEAD
FLTR	FILTER
FRP	FIBERGLASS REINFORCED PLASTIC
FT	FOOT, FEET
FTG	FOOTING
FV	FLAP VALVE
FWD	FORWARD
°F	DEGREES. FAHRENHEIT
GA	GAUGE
GAL	GALLON
GALV	GALVANIZED
GBT	GRAVITY BELT THICKENER
GC	GROOVED COUPLING
GCF	GROOVED COUPLING FITTING
GL	GLASS
GPD	GALLONS PER DAY
GPH	GALLONS PER HOUR
GPM	GALLONS PER MINUTE
GS	GALVANIZED STEEL
GV	GATE VALVE
HB	HOSE BIBB
HCL	HYDROCHLORIC ACID
HDW	HARDWARE
HG, HGL	HYDRAULIC GRADE
HGT	HEIGHT
HH	HAND HOLE
HMC	HARNESSED MECHANICAL COUPLING
HORIZ	HORIZONTAL
HP	HORSEPOWER
HSP	HIGH SERVICE PUMP
HT	HOIST/TROLLEY
HWL	HIGH WATER LEVEL
ID	INSIDE DIAMETER
IEEE	INSTITUTE OF ELECTRICAL & ELECTRONIC ENGINEERS
IES	ILLUMINATING ENGINEERING SOCIETY
IF	INSIDE FACE
IN	INCH, INCHES
INFL	INFLUENT
INSTM	INSTRUMENT
INV	INVERT
ISA	INSTRUMENT SOCIETY OF AMERICA
JT	JOINT
KIP	THOUSAND POUNDS
KW	KILOWATT
L OR Δ	ANGLE
LAB	LABORATORY
LAV	LAVATORY
LB	POUND
LB/CU FT	POUNDS PER CUBIC FOOT
LF	LINEAR FEET
LOC	LIMITS OF CONSTRUCTION
LR	LONG RADIUS
LT	LEFT
LWL	LOW WATER LEVEL
M	MIDDLE ORDINATE
MAS	MASONRY
MAX	MAXIMUM
MCC	MOTOR CONTROL CENTER
MECH	MECHANICAL
MFR	MANUFACTURER
MFM	MAGNETIC FLOW METER
MGD	MILLION GALLONS PER DAY
MH	MANHOLE
MIN	MINIMUM
MISC	MISCELLANEOUS
MJ	MECHANICAL JOINT
ML	MIXED LIQUIDS
MWS	MAXIMUM WATER SURFACE
N	NORTH
NEC	NATIONAL ELECTRIC CODE
NEMA	NATIONAL ELECTRICAL MANUFACTURER'S ASSOCIATION
NIC	NOT IN CONTRACT
NO	NUMBER
NP	WASHWATER BOOSTER PUMP
NPT	NATIONAL PIPE THREADS
NPW	NON-POTABLE WATER
NSF	NATIONAL SANITARY FOUNDATION
NTS	NOT TO SCALE
NWL	NORMAL WATER LEVEL

ITEM	DESCRIPTION
OC	ON CENTER
OD	OUTSIDE DIAMETER, OVERHEAD DOOR
OF	OUTSIDE FACE
OH	OVERHEAD POWER LINE
OSD	OPEN SITE DRAIN
OSHA	OCCUPATIONAL SAFETY AND HEALTH ADMINISTRATION
OPNG	OPENING
OZ	OUNCE
P	PIPE
PAT	POLYMER AGING TANK
PC	POINT OF CURVATURE
PE	PLAIN END
PI	POINT OF INTERSECTION
PL	PLATE (STEEL)
PLC(S)	PLACE(S)
PLYWD	PLYWOOD
PMP	POLYMER METERING PUMP
PMU	POLYMER MIXING UNIT
PO	POLYMER
POS	POLYMER SOLUTION
PREFAB	PREFABRICATED
PRESS	PRESSURE
PRI	PRIMARY
PRP	POLYMER RECIRCULATION PUMP
PR/PSV	PRESSURE RELIEF/PRESSURE SUSTAINING VALVE
PROP	PROPOSED, PROPERTY
PSF	POUNDS PER SQUARE FOOT
PSI	POUNDS PER SQUARE INCH
PSIG	POUNDS PER SQUARE INCH GAUGE
PST	POLYMER STORAGE TANK (BULK)
PVC	POLYVINYL CHLORIDE
PW	POTABLE WATER
Q	FLOW
RAD	RADIUS
RD	ROOF DRAIN
RDCR	REDUCER
RECIRC	RECIRCULATION
RECT	RECTANGULAR
REF	REFER, REFERENCE
REFR	REFRIGERATOR
REINF	REINFORCE, REINFORCED, REINFORCING
REP	REPRESENTATIVE
REQ'D	REQUIRED
RH	ROD HOLE
RL	RAIN LEADER
RM	ROOM
ROW	RIGHT-OF-WAY
RST	REINFORCING STEEL
RT	RIGHT
RTN	RETURN
RV	ROOF VENT
S	STEEL
SCFM	STANDARD CUBIC FEET PER MINUTE
SCHED	SCHEDULE
SD	STORM DRAIN
SEC	SECONDARY
SECT	SECTION
SEW	SEWAGE
SHT	SHEET
SIM	SIMILAR
SL	SLUDGE
SLG	SLIDE GATE
SLP	SLUDGE FEED/DISCHARGE PUMP
SOLN	SOLUTION
SP	SUMP PUMP
SPEC	SPECIFICATIONS
SPKR	SPRINKLER
SPPT	SUPPORT
SQ	SQUARE
SQ FT	SQUARE FOOT
SQ IN	SQUARE INCH
SS	STAINLESS STEEL
STA	STATION
STD	STANDARD
STL	STRUCTURAL STEEL
STM	STORM
STRUC	STRUCTURE
SUB	SUBSTANTIAL
SYMN	SYMMETRICAL
TAN	TANGENT
TB	TEST BORING
TBG	TUBING
TC	TOP OF CURB
TDCV	TILT DISK CHECK VALVE
TDH	TOTAL DYNAMIC HEAD
TECH	TECHNICAL
TEL	TELEPHONE
TEMP	TEMPERATURE
THD	THREAD
TP	TURNING POINT
TS	TOP OF SLAB
TSL	THICKENED SLUDGE
TT	THRUST TIE
TW	TOP OF WALL

ITEM	DESCRIPTION
TYP	TYPICAL
UBC	UNIFORM BUILDING CODE
UFC	UNIFORM FIRE CODE
UMC	UNIFORM MECHANICAL CODE
UNO	UNLESS OTHERWISE NOTED
UPC	UNIFORM PLUMBING CODE
V	VENT, VOLT
VAC	VACUUM
VC	VERTICAL
VERT	VERTICAL CURVE
VFD	VARIABLE FREQUENCY DRIVE
VTR	VENT THRU ROOF
W/	WITH
WC	WATER CLOSET
WF	WIDE FLANGE (BEAM)
WH	WATER HEATER
WL	WATER LEVEL
WS	WATER SURFACE, WATERSTOP
WSH	WASHWATER PUMP
WST	WASHWATER STRAINER
WTR	WATER
WW	WASTEWATER
WWMH	WASTEWATER MANHOLE
Y, YD	YARD, YARDS

NOTES:
1. FOR SPECIFIC STRUCTURAL, HVAC, ELECTRICAL AND INSTRUMENTATION ABBREVIATIONS, SEE STRUCTURAL, HVAC, ELECTRICAL AND INSTRUMENTATION DRAWINGS.
2. CONTACT THE ENGINEER FOR ABBREVIATIONS NOT LISTED.
3. THIS SHEET INCLUDES STANDARD ABBREVIATIONS; THEREFORE, SOME ABBREVIATIONS MAY APPEAR ON THIS SHEET AND NOT ON THE PLANS.

LINEWORK DESCRIPTIONS

EXISTING	PROPOSED	
		REINFORCED CONCRETE SECTION
		BUILDING PLAN VIEW
		CONCRETE ROAD, DRIVEWAY, OR SIDEWALK
		GRATING – PLAN VIEW
		ALUMINUM OR STEEL DECK PLATE
		SELECT BACKFILL
		GRANULAR FILL OR GRAVEL ROAD
		DEMOLITION
		ASPHALT PAVEMENT
		STEEL IN SECTION
		MASONRY (BRICK OR BLOCK)
—X–X–X— OR PIPE LEGEND	—X–X–X— OR PIPE LEGEND	PIPE, SMALL SIZE. SEE PIPING LEGEND (SEE SHEET M–1)
PIPE LEGEND	PIPE LEGEND	PIPE, LARGE SIZE. SHOWN AS TWO LINES WITH CENTERLINE
BURIED E	BURIED E	UNDERGROUND ELECTRICAL – UGE
BURIED C	BURIED C	UNDERGROUND COMMUNICATION DUCTBANK
—OH—	—OH—	OVERHEAD POWER LINE
		SHALE OR LIMESTONE
		EARTH OR GRADE
		YARD HYDRANT STATION
		FIRE HYDRANT
MH	MH	MANHOLE
TB–1	TB–1	TEST BORING LOCATION AND NUMBER
		BENCHMARK LOCATION
		COORDINATE LOCATION
—X—	—X—	FENCE
—PL—	—PL—	PROPERTY LINE
		RAILROAD

DRAFTING SYMBOLS

SECTION NUMBER
1 / M4 — SECTION
INDICATES SECTION IS CUT ON SHEET "M–4"

A — DETAIL NAME
DETAIL LETTER
A / M4 — DETAIL TYP
DETAIL APPEARS ON SHEET "M–4"

1 / – — INDICATES SECTION APPEARS ON SAME SHEET

DIRECTION OF VIEW
1 / M4 — PHOTO APPEARS ON SHEET "M–4"

DRAWING IDENTIFICATION SYSTEM

M – 1
SEQUENTIAL SHEET NUMBER
DISCIPLINE CODE

DISCIPLINE CODES

CODE	DESCRIPTION
G	GENERAL
C	CIVIL
A	ARCHITECTURAL
S	STRUCTURAL
M	MECHANICAL
H	HVAC
E	ELECTRICAL
I	INSTRUMENTATION

CP&Y, INC.
TBPE FIRM REGISTRATION NO. F-1741

CITY OF AUSTIN — EST. 1839 — FOUNDED

STATE OF TEXAS — LINDSAY C. WEBB — 110398 — LICENSED PROFESSIONAL ENGINEER — 05/06/21

NO.	REVISION	BY	DATE

VERIFY SCALE 0 1"
BAR IS ONE INCH ON ORIGINAL DRAWING. IF NOT ONE INCH ON THIS SHEET, ADJUST SCALE

CITY OF AUSTIN – AUSTIN WATER
HORNSBY BEND BMP CENTRIFUGES

GENERAL ABBREVIATIONS, DRAFTING SYMBOLS & DRAWING LEGEND

Date: MAY 2021
Designed: P.VILLARREAL
Drawn: S.MEDINA
Reviewed: L.WEBB
CP&Y Proj. AUST1600646.01

SHEET
G–4

REFERENCES: _CPY_Standard_Border_Base.dwg _Std ENVIRO SEALS
May 14, 2021 – 2:16pm C:\pwworking\cpy\pw_cpy\pvillarreal\d0795251\AUST1600646.01_1_G-4_CPY.dwg

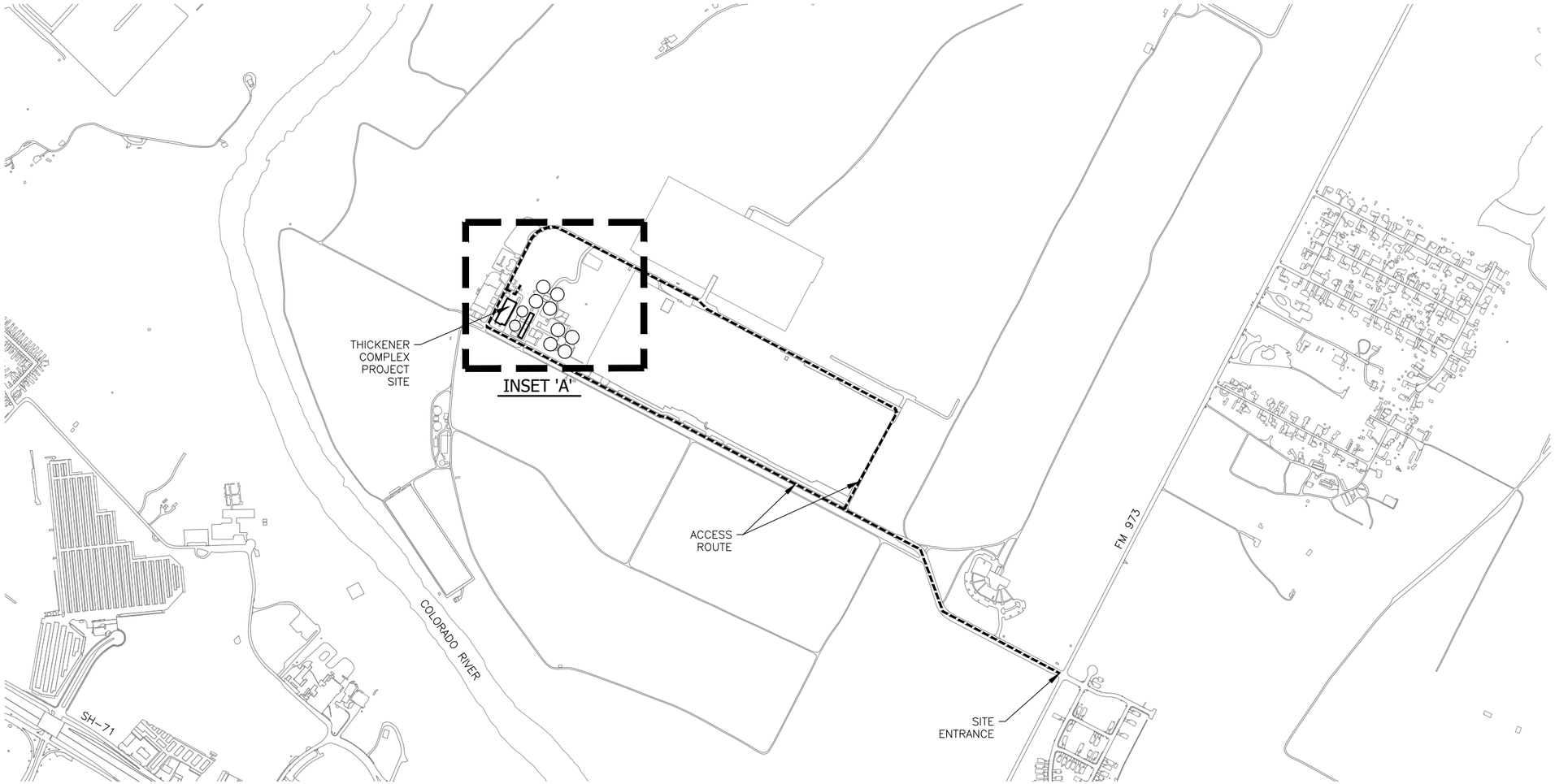

ACCESS ROUTE

0 500 1000
SCALE IN FEET

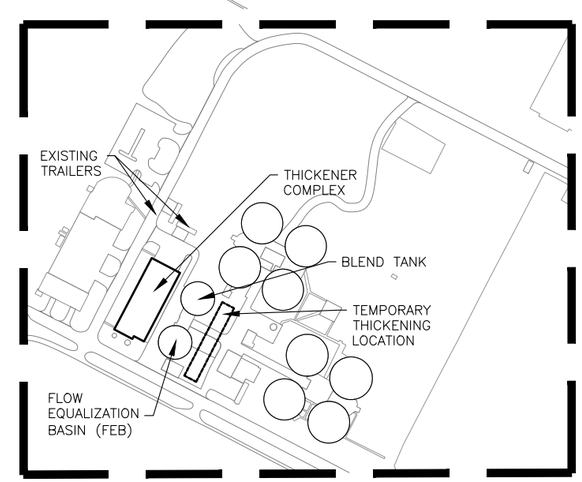

INSET 'A'

0 200 400
SCALE IN FEET

TRUE NORTH

PLANT NORTH

CAS CONSULTING AND SERVICES, INC.
7908 CAMERON ROAD
AUSTIN, TEXAS 78754
REG. No. F-003572

CP&Y, INC.
TBPE FIRM REGISTRATION NO. #F-1741

CITY OF AUSTIN ESTD. FOUNDED

05/26/2021

NO.	REVISION	BY	DATE

VERIFY SCALE 0 1"
BAR IS ONE INCH ON ORIGINAL DRAWING. IF NOT ONE INCH ON THIS SHEET, ADJUST SCALE

CITY OF AUSTIN – AUSTIN WATER
HORNSBY BEND BMP CENTRIFUGES

ACCESS ROUTE

Date: APRIL 2021
Designed: M.MERIWETHER
Drawn: J.WILLIG
Reviewed: M.MERIWETHER
CP&Y Proj: AUST1600646.01

SHEET
C–1

REFERENCES: Hornsby Access Route.dwg 140055_pln.dwg 140060_pln.dwg 145055_pln.dwg AUST1600646.01 Border Base
May 06, 2021 – 9:02am \\cas-dataserver\water\ACTIVE PROJECTS\COA W & WW Facility Engineering RL 2010-2013\CP&Y Hornsby Bend Th Comp\3.0 CAD\AUST14010 CAS C-1.dwg

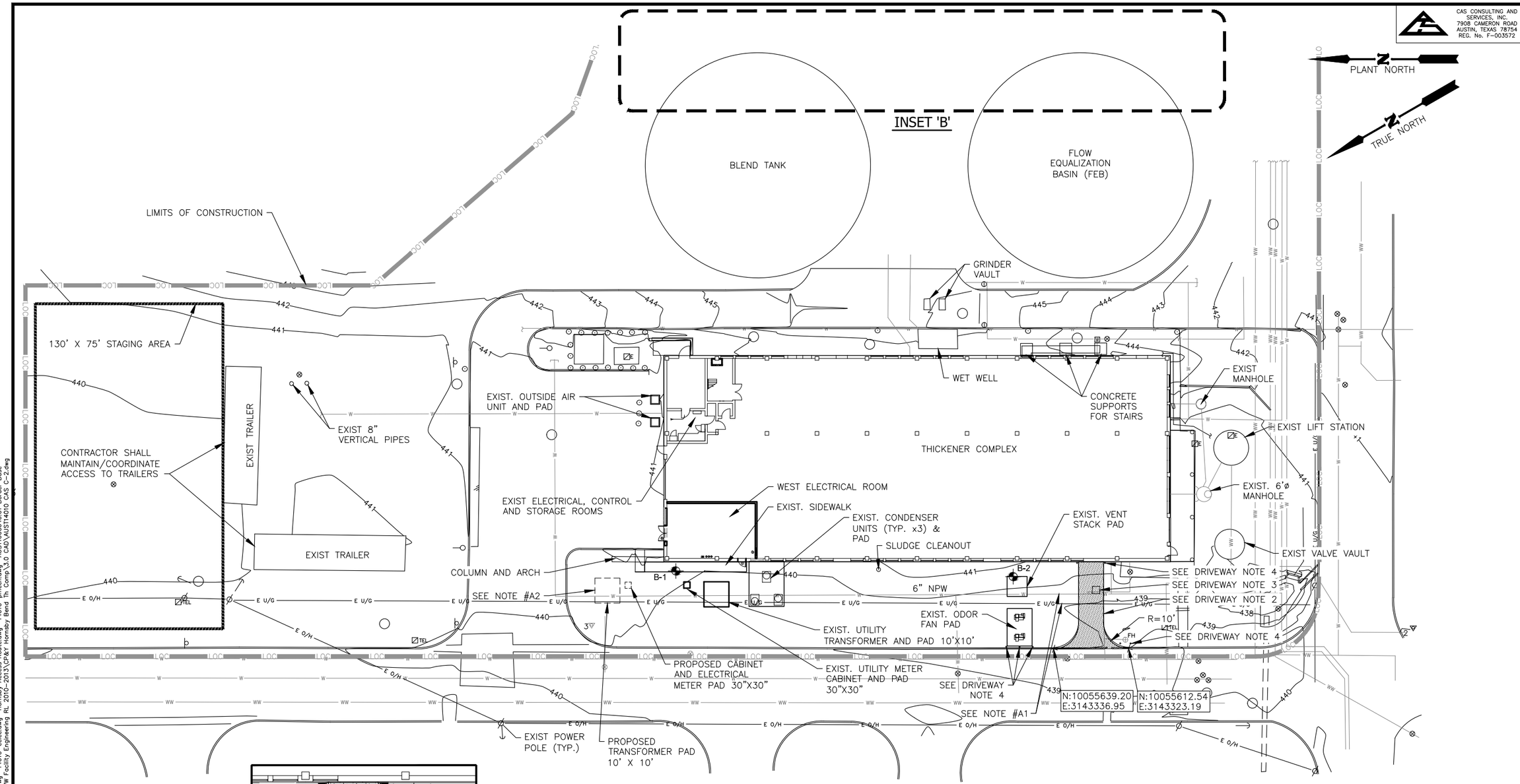

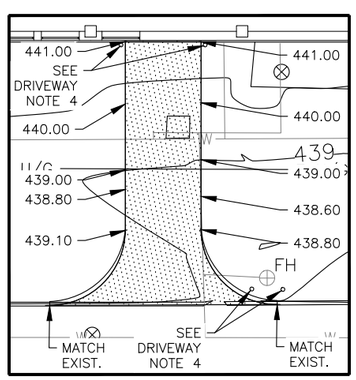

DRIVEWAY DETAIL

0 10 20
SCALE IN FEET

SITE PLAN

0 20 40
SCALE IN FEET

DRIVEWAY NOTES:

1. CONSTRUCT 10' WIDE 7" THICK CONCRETE DRIVEWAY PER STD DETAIL 433S-2 ON SHEET C-7.
2. DEPRESS DRIVEWAY TO MATCH EXISTING GRADE AND MAINTAIN EXISTING DRAINAGE PATTERN.
3. ABANDON VAULT: CAP EXISTING NPW AND PW LINES, CLOSE VALVES, REMOVE LID, BACKFILL VAULT, AND CAP WITH 6" CLASS A CONCRETE TO GRADE.
4. 6" STEEL BOLLARDS PER DETAIL D ON SHEET C-7. SEVEN (7) TOTAL
5. SEE DRIVEWAY DETAIL FOR DRIVEWAY SPOT ELEVATIONS.

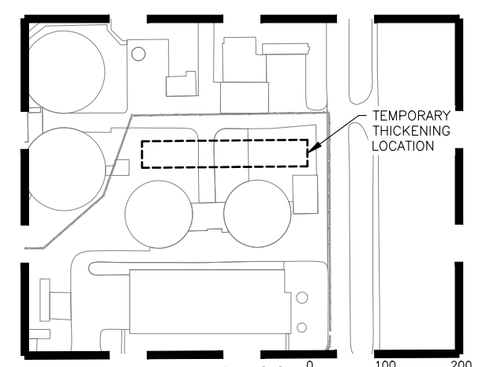

INSET 'B'

0 100 200
SCALE IN FEET

LEGEND

B-X SOILS BORING

PROPOSED CONCRETE DRIVEWAY

NOTES:

A1. CONTRACTOR SHALL POTHOLE EXISTING ELECTRIC LINE AND NPW LINE PRIOR TO CONSTRUCTING DRIVEWAY. LINES MAY NOT BE ACTIVE AND OWNER WILL DECIDE IF THEY ARE TO BE ABANDONED OR RELOCATED.

A2. COORDINATE WITH ELECTRIC UTILITY FOR PROPOSED CABINET & ELECTRICAL METER AND TRANSFORMER PAD DETAILS.

CAS CONSULTING AND SERVICES, INC.
7908 CAMERON ROAD
AUSTIN, TEXAS 78754
REG. No. F-003572

CP&Y, INC.
TBPE FIRM REGISTRATION NO. #F-1741

NO.	REVISION	BY	DATE

VERIFY SCALE 0 1" BAR IS ONE INCH ON ORIGINAL DRAWING. IF NOT ONE INCH ON THIS SHEET, ADJUST SCALE

CITY OF AUSTIN – AUSTIN WATER
HORNSBY BEND BMP CENTRIFUGES

SITE PLAN

Date:	APRIL 2021
Designed:	M.MERIWETHER
Drawn:	J.WILLIG
Reviewed:	M.MERIWETHER
CP&Y Proj:	AUST1600646.01

SHEET
C-2

REFERENCES: 14010-earch.dwg 14010-parch.dwg 14010-phvac.dwg 14010-pelec.dwg 14010-eelec.dwg Hornsby Access Route.dwg 14010-pmech.dwg AUST1600646.01 Border Base
May 06, 2021 – 9:03am \\cas-dataserver\water\1ACTIVE PROJECTS\COA W & WW Facility Engineering RL 2010-2013\CP&Y Hornsby Bend Th Comp\3.0 CAD\AUST14010 CAS C-2.dwg

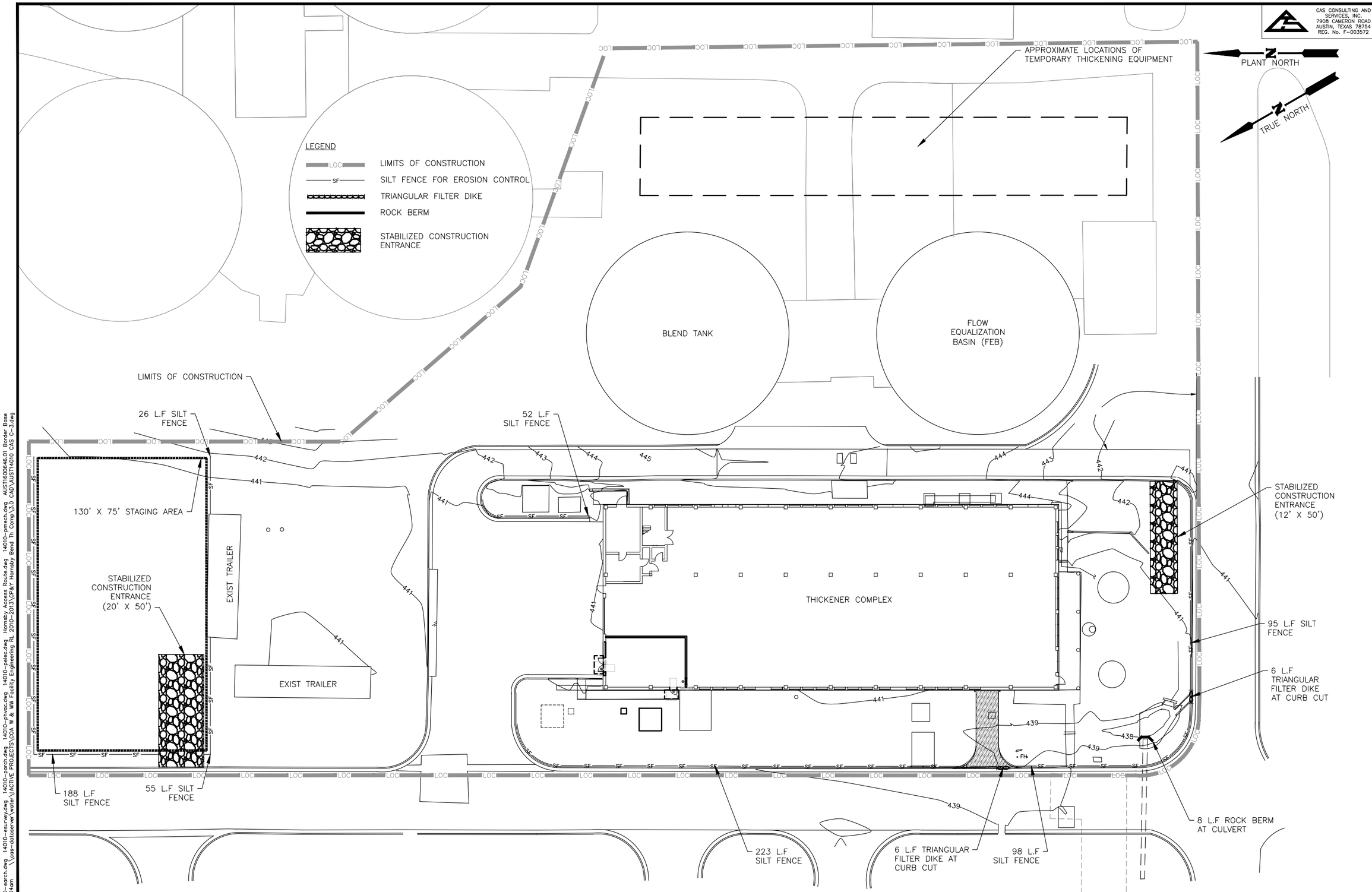

EROSION CONTROL AND LIMITS OF CONSTRUCTION

0 20 40
SCALE IN FEET

CAS CONSULTING AND SERVICES, INC.
7908 CAMERON ROAD
AUSTIN, TEXAS 78754
REG. No. F-003572

CP&Y, INC.
TBPE FIRM REGISTRATION NO. F-1741

CITY OF AUSTIN 1839 FOUNDED

05/26/2021

NO.	REVISION	BY	DATE

VERIFY SCALE BAR IS ONE INCH ON ORIGINAL DRAWING. IF NOT ONE INCH ON THIS SHEET, ADJUST SCALE
0 1"

CITY OF AUSTIN – AUSTIN WATER
HORNSBY BEND BMP CENTRIFUGES

EROSION CONTROL AND LIMITS OF CONSTRUCTION

Date: APRIL 2021
Designed: M.MERIWETHER
Drawn: J.WILLIG
Reviewed: M.MERIWETHER
CP&Y Proj. AUST16006646.01

SHEET
C-3

REFERENCES: 14010-earch.dwg 14010-esurvey.dwg 14010-parch.dwg 14010-phvac.dwg 14010-pelec.dwg Hornsby Access Route.dwg 14010-pmech.dwg AUST16006646.01 Border Base
May 06, 2021 – 9:04am \\cas-dataserver\water\ACTIVE PROJECTS\COA W & WW Facility Engineering RL 2010-2013\CP&Y Hornsby Bend Th Comp\3.0 CAD\AUST14010 CAS C-3.dwg

CITY OF AUSTIN – STANDARD NOTES
EROSION AND SEDIMENTATION CONTROL
(MODIFIED FOR USE ON GENERAL PERMIT PROJECTS)

1. THE CONTRACTOR SHALL INSTALL EROSION/SEDIMENTATION CONTROLS AND TREE/NATURAL AREA PROTECTIVE FENCING PRIOR TO ANY SITE PREPARATION WORK (CLEARING, GRUBBING, OR EXCAVATION).

2. THE PLACEMENT OF EROSION/SEDIMENTATION CONTROLS SHALL BE IN ACCORDANCE WITH THE ENVIRONMENTAL CRITERIA MANUAL AND THE APPROVED EROSION AND SEDIMENTATION CONTROL PLAN.

3. THE PLACEMENT OF TREE/NATURAL AREA PROTECTIVE FENCING SHALL BE IN ACCORDANCE WITH THE CITY OF AUSTIN STANDARD NOTES FOR TREE AND NATURAL AREA PROTECTION AND THE APPROVED GRADING/TREE AND NATURAL AREA PLAN.

4. A PRE–CONSTRUCTION CONFERENCE SHALL BE HELD ON–SITE WITH THE CONTRACTOR, DESIGN ENGINEER, PERMIT APPLICANT, AND GENERAL PERMIT PROGRAM REPRESENTATIVE AFTER INSTALLATION OF THE EROSION/SEDIMENTATION CONTROLS AND THE TREE/NATURAL AREA PROTECTION MEASURES AND PRIOR TO BEGINNING ANY SITE PREPARATION WORK. THE CONTRACTOR SHALL NOTIFY THE GENERAL PERMIT PROGRAM OFFICE AT 512/974–6330, AT LEAST 3 DAYS PRIOR TO THE MEETING DATE.

5. ANY SIGNIFICANT VARIATION IN MATERIALS OR LOCATIONS OF CONTROLS OR FENCES FROM THOSE SHOWN ON THE APPROVED PLANS MUST BE APPROVED BY THE REVIEWING ENGINEER AND THE GENERAL PERMIT PROGRAM REPRESENTATIVE.

6. THE CONTRACTOR IS REQUIRED TO INSPECT THE CONTROLS AND FENCES AT DAILY INTERVALS AND AFTER SIGNIFICANT RAINFALL EVENTS TO INSURE THAT THEY ARE FUNCTIONING PROPERLY. THE PERSON(S) RESPONSIBLE FOR MAINTENANCE OF CONTROLS AND FENCES SHALL IMMEDIATELY MAKE ANY NECESSARY REPAIRS TO DAMAGED AREAS. SILT ACCUMULATION AT CONTROLS MUST BE REMOVED WHEN THE DEPTH REACHES SIX (6) INCHES. SILT ACCUMULATION AT INLET DEVICES SHOULD BE REMOVED WHEN THE DEPTH REACHES TWO (2) INCHES.

7. PRIOR TO FINAL ACCEPTANCE BY THE CITY, HAUL ROADS AND WATERWAY CROSSINGS CONSTRUCTED FOR TEMPORARY CONTRACTOR ACCESS MUST BE REMOVED, ACCUMULATED SEDIMENT REMOVED FROM THE WATERWAY AND THE AREA RESTORED TO THE ORIGINAL GRADE AND REVEGETATED. ALL LAND CLEARING DEBRIS SHALL BE DISPOSED OF IN APPROVED SPOIL DISPOSAL SITES.

8. ALL WORK MUST STOP IF A VOID IN THE ROCK SUBSTRATE IS DISCOVERED WHICH IS ONE SQUARE FOOT OR LARGER IN TOTAL AREA, BLOWS AIR FROM WITHIN THE SUBSTRATE, AND/OR CONSISTENTLY RECEIVES WATER DURING ANY RAIN EVENT. AT THIS TIME, IT IS THE RESPONSIBILITY OF THE PROJECT MANAGER TO IMMEDIATELY CONTACT THE GENERAL PERMIT PROGRAM REPRESENTATIVE FOR FURTHER INVESTIGATION.

9. FIELD REVISIONS TO THE EROSION/SEDIMENTATION CONTROL PLAN MAY BE REQUIRED BY THE GENERAL PERMIT PROGRAM REPRESENTATIVE DURING THE COURSE OF CONSTRUCTION TO CORRECT CONTROL INADEQUACIES. ANY REVISIONS TO THE PERMITTED PLAN MUST BE APPROVED BY THE GENERAL PERMIT PROGRAM OFFICE OF THE PLANNING AND DEVELOPMENT REVIEW DEPARTMENT.

PERMANENT EROSION/SEDIMENTATION CONTROL: ALL DISTURBED AREAS SHALL BE RESTORED IN ACCORDANCE WITH THE CONTRACT DOCUMENTS. WHERE THE CRITERIA MANUAL AND CONTRACT DOCUMENTS DIFFER THE MOST ENVIRONMENTALLY BENEFICIAL MATERIALS/METHOD SHALL BE REQUIRED UNLESS OTHERWISE APPROVED BY THE GENERAL PERMIT PROGRAM REPRESENTATIVE.

10. DEVELOPER INFORMATION:

OWNER:

COMPANY:	CITY OF AUSTIN , AUSTIN WATER
CONTACT:	JULES PARRISH
ADDRESS:	505 BARTON SPRINGS ROAD, SUITE 900
	AUSTIN, TEXAS 78704
PHONE:	(512) 974–9385
FAX:	(512) 974–7222

OWNER'S REPRESENTATIVE RESPONSIBLE FOR PLAN ALTERATIONS:

COMPANY:	CAS CONSULTING & SERVICES, INC.
CONTACT:	MICHAEL C. MERIWETHER, P.E.
ADDRESS:	7908 CAMERON ROAD
	AUSTIN, TEXAS 78754
PHONE:	(512) 836–2388
FAX:	(512) 836–4515

PARTY RESPONSIBLE FOR EROSION/SEDIMENTATION CONTROL MAINTENANCE:

COMPANY: CONTRACTOR

PARTY RESPONSIBLE FOR TREE/NATURAL AREA PROTECTION MAINTENANCE:

COMPANY: CONTRACTOR

11. THE CONTRACTOR SHALL NOT DISPOSE OF SURPLUS EXCAVATED MATERIAL FROM THE SITE WITHOUT NOTIFYING THE GENERAL PERMIT PROGRAM REPRESENTATIVE, AT 974–6330, AT LEAST 48 HOURS PRIOR TO THE SPOILS REMOVAL. THIS NOTIFICATION SHALL INCLUDE THE DISPOSAL LOCATION AND A COPY OF THE PERMIT ISSUED TO RECEIVE THE MATERIAL.

12. INLET PROTECTION SHALL BE INSTALLED IMMEDIATELY PRIOR TO STREET WORK, AND WILL BE REMOVED AS SOON AS THE GENERAL PERMIT PROGRAM REPRESENTATIVE AGREES THAT THERE IS NO POTENTIAL FOR SEDIMENTATION.

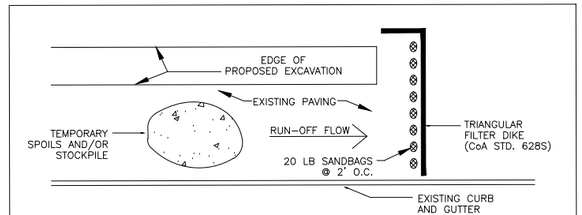

NOTES:

1. THE TEMPORARY SPOILS/STOCKPILE STORAGE AREA AND STAGING AREA MAY BE LOCATED DIRECTLY ADJACENT TO THE EXCAVATION AND ON THE PAVEMENT.
2. ANY SPOIL NOT INTENDED TO BE REUSED WILL BE HAULED TO AN APPROVED OR PERMITTED DISPOSAL SITE DAILY.
3. INSTALL TRIANGULAR SEDIMENT FILTER DIKE (DETAIL 682S) ACROSS FULL WIDTH OF TRAFFIC CLOSURE AND DOWNSTREAM OF CONSTRUCTION AREA, PERPENDICULAR TO CURB AND PLACED TO EFFECTIVELY CATCH AND CONTAIN SEDIMENT LADEN RUNOFF FROM THE EXCAVATED AREA. FILTER DIKE TO FOLLOW ACTIVE CONSTRUCTION. REMOVING AND RE–SETTING FILTER DIKE IS CONSIDERED SUBSIDIARY TO BARRICADES AND TRAFFIC HANDLING.

ADDITIONAL EROSION/SEDIMENTATION CONTROL FOR WORK IN PAVED AREAS

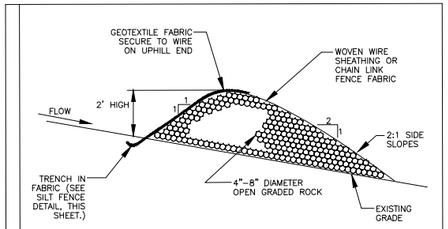

NOTES:

1. USE ONLY OPEN GRADED ROCK, 4–8 INCH DIAMETER, FOR STREAM FLOW CONDITION. USE OPEN GRADED ROCK, 3–5 INCH DIAMETER, FOR OTHER CONDITIONS.
2. ROCK BERM SHALL BE SECURED WITH A WOVEN WIRE SHEATHING HAVING MAXIMUM 1 INCH OPENING AND MINIMUM WIRE DIAMETER OF 20 GAUGE.
3. ROCK BERM SHALL BE INSPECTED WEEKLY OR AFTER EACH RAIN, AND THE STONE AND/OR FABRIC CORE–WOVEN WIRE SHEATHING SHALL BE REPLACED WHEN THE STRUCTURE CEASES TO FUNCTION AS INTENDED, DUE TO SILT ACCUMULATION AMONG THE ROCKS, WASHOUT, CONSTRUCTION TRAFFIC DAMAGE, ETC.
4. WHEN SILT REACHES A DEPTH EQUAL TO ONE–THIRD THE HEIGHT OF THE BERM OR ONE FOOT, WHICHEVER IS LESS, THE SILT SHALL BE REMOVED AND DISPOSED OF IN AN APPROVED SITE AND IN A MANNER AS TO NOT CREATE A SILTATION PROBLEM.
5. DAILY INSPECTION SHALL BE MADE ON SEVERE SERVICE ROCK BERMS; SILT SHALL BE REMOVED WHEN ACCUMULATION REACHES 6 INCHES.
6. WHEN SITE IS COMPLETELY STABILIZED, THE BERM AND ACCUMULATED SILT SHALL BE REMOVED AND DISPOSED OF IN AN APPROVED MANNER.

REV. DATE: DESCRIPTION:

FABRIC COVERED (SEVERE SERVICE) ROCK BERM

APPROVED	ADOPTED: SCALE: N.T.S. INITIAL:	STANDARD NO. N/A

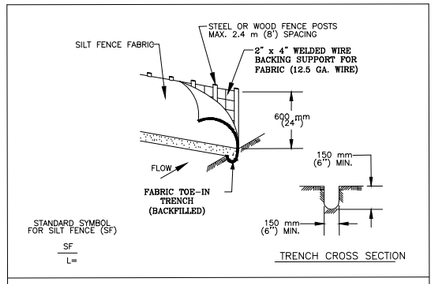

1. STEEL OR WOOD POSTS WHICH SUPPORT THE SILT FENCE SHALL BE INSTALLED ON A SLIGHT ANGLE TOWARD THE ANTICIPATED RUNOFF SOURCE. POST MUST BE EMBEDDED A MINIMUM OF 300 mm (12 INCHES). IF WOOD POSTS CANNOT ACHIEVE 300 mm (12 inches) DEPTH, USE STEEL POSTS.

2. THE TOE OF THE SILT FENCE SHALL BE TRENCHED IN WITH A SPADE OR MECHANICAL TRENCHER, SO THAT THE DOWNSLOPE FACE OF THE TRENCH IS FLAT AND PERPENDICULAR TO THE LINE OF FLOW.

3. THE TRENCH MUST BE A MINIMUM OF 150 mm (6 inches) DEEP AND 150 mm (6 inches) WIDE TO ALLOW FOR THE SILT FENCE FABRIC TO BE LAID IN THE GROUND AND BACKFILLED WITH COMPACTED MATERIAL.

4. SILT FENCE FABRIC SHOULD BE SECURELY FASTENED TO EACH STEEL OR WOOD SUPPORT POST OR TO WOVEN WIRE , WHICH IS IN TURN ATTACHED TO THE STEEL OR WOOD FENCE POST.

5. INSPECTION SHALL BE MADE WEEKLY OR AFTER EACH RAINFALL EVENT AND REPAIR OR REPLACEMENT SHALL BE MADE PROMPTY AS NEEDED.

6. SILT FENCE SHALL BE REMOVED WHEN THE SITE IS COMPLETELY STABILIZED SO AS NOT TO BLOCK OR IMPEDE STORM FLOW OR DRAINAGE.

7. ACCUMULATED SILT SHALL BE REMOVED WHEN IT REACHES A DEPTH OF 150 mm (6 inches). THE SILT SHALL BE DISPOSED OF ON AN APPROVED SITE AND IN SUCH A MANNER THAT WILL NOT CONTRIBUTE TO ADDITIONAL SILTATION.

CITY OF AUSTIN WATERSHED PROTECTION DEPARTMENT	SILT FENCE	
RECORD COPY SIGNED BY MORGAN BYARS 09/01/2011 ADOPTED	THE ARCHITECT/ENGINEER ASSUMES RESPONSIBILITY FOR APPROPRIATE USE OF THIS STANDARD.	STANDARD NO. 642S–1

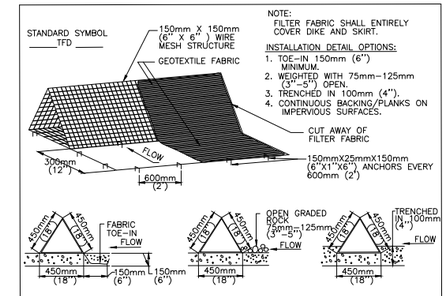

NOTE:
FILTER FABRIC SHALL ENTIRELY COVER DIKE AND SKIRT.

INSTALLATION DETAIL OPTIONS:
1. TOE–IN 150mm (6")
2. WEIGHTED WITH 75mm–125mm (3"–5") OPEN.
3. TRENCHED IN 100mm (4").
4. CONTINUOUS BACKING/PLANKS ON IMPERVIOUS SURFACES.

GENERAL NOTES
1. DIKES SHALL BE PLACED IN A ROW WITH ENDS TIGHTLY ABUTTING THE ADJACENT DIKE.
2. THE FABRIC COVER AND SKIRT SHALL BE A CONTINUOUS WRAPPING OF GEOTEXTILE. THE SKIRT SHALL BE A CONTINUOUS EXTENSION OF THE FABRIC ON THE UPSTREAM FACE.
3. THE SKIRT SHALL BE WEIGHTED WITH A CONTINUOUS LAYER OF 75–125mm (3–5") OPEN GRADED ROCK OR TOED–IN 150mm (6") WITH MECHANICALLY COMPACTED MATERIAL. OTHERWISE, THE ENTIRE STRUCTURE SHALL BE TRENCHED IN 100mm (4").
4. DIKES AND SKIRT SHALL BE SECURELY ANCHORED IN PLACE USING 150mm (6") WIRE STAPLES ON 600mm (2') CENTERS ON BOTH EDGES AND SKIRT, OR STAKE USING 10M (3/8 ") DIAMETER RE–BAR WITH TEE ENDS.
5. FILTER MATERIAL SHALL BE LAPPED OVER ENDS 150mm (6") TO COVER DIKE TO DIKE JOINTS. JOINTS SHALL BE FASTENED WITH GALVANIZED SHOAT RINGS.
6. THE DIKE STRUCTURE SHALL BE MW40–150mmX150mm (6 GA. 6"X6") WIRE MESH, 450mm (18") ON A SIDE.
7. INSPECTION SHALL BE MADE WEEKLY OR AFTER EACH RAINFALL EVENT AND REPAIR OR REPLACEMENT SHALL BE MADE PROMPTLY AS NEEDED BY THE CONTRACTOR.
8. ACCUMULATED SILT SHALL BE REMOVED WHEN IT REACHES A DEPTH OF 150mm (6") AND DISPOSED OF IN A MANNER WHICH WILL NOT CAUSE ADDITIONAL SILTATION.
9. AFTER THE DEVELOPMENT SITE IS COMPLETLY STABILIZED, THE DIKES AND ANY REMAINING SILT SHALL BE REMOVED. SILT SHALL BE DISPOSED OF AS INDICATED IN GENERAL NOTE 8 ABOVE.

CITY OF AUSTIN WATERSHED PROTECTION DEPARTMENT	TRIANGULAR SEDIMENT FILTER DIKE	
RECORD COPY SIGNED BY J. PATRICK MURPHY 3/27/00 ADOPTED	THE ARCHITECT/ENGINEER ASSUMES RESPONSIBILITY FOR APPROPRIATE USE OF THIS STANDARD.	STANDARD NO. 628S

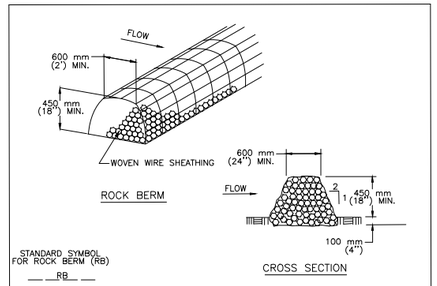

NOTES:

1. USE ONLY OPEN GRADED ROCK 75 to 125 mm (3 to 5") DIAMETER FOR ALL CONDITIONS.
2. THE ROCK BERM SHALL BE SECURED WITH A WOVEN WIRE SHEATHING HAVING MAXIMUM 25 mm (1") OPENING AND MINIMUM WIRE DIAMETER OF 12.9 mm (20 GAUGE).
3. THE ROCK BERM SHALL BE INSPECTED DAILY OR AFTER EACH RAIN, AND THE STONE AND/OR FABRIC CORE–WOVEN SHEATHING SHALL BE REPLACED WHEN THE STRUCTURE CEASES TO FUNCTION AS INTENDED, DUE TO SEDIMENT ACCUMULATION AMONG THE ROCKS, WASHOUT, CONSTRUCTION TRAFFIC DAMAGE, ETC.
4. IF SEDIMENT REACHES A DEPTH EQUAL TO ONE–THIRD THE HEIGHT OF THE BERM OR 150 mm (6"), WHICHEVER IS LESS, THE SEDIMENT SHALL BE REMOVED AND DISPOSED OF ON AN APPROVED SITE AND IN A MANNER THAT WILL NOT CREATE A SEDIMENTION PROBLEM.
5. WHEN THE SITE IS COMPLETELY STABILIZED,THE BERM AND ACCUMULATED SEDIMENT SHALL BE REMOVED AND DISPOSED OF IN AN APPROVED MANNER.

CITY OF AUSTIN WATERSHED PROTECTION DEPARTMENT	ROCK BERM	
RECORD COPY SIGNED BY MORGAN BYARS 8/24/2010 ADOPTED	THE ARCHITECT/ENGINEER ASSUMES RESPONSIBILITY FOR APPROPRIATE USE OF THIS STANDARD.	STANDARD NO. 639S–1

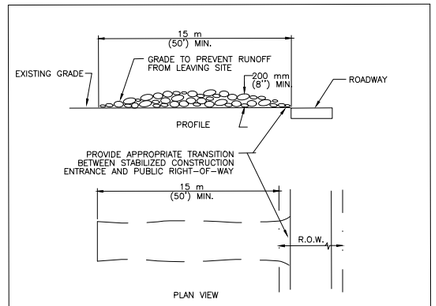

NOTES:
1. STONE SIZE: 75–125 mm (3–5") OPEN GRADED ROCK.
2. LENGTH: AS EFFECTIVE BUT NOT LESS THAN 15 m (50').
3. THICKNESS: NOT LESS THAN 200 mm (8").
4. WIDTH: NOT LESS THAN FULL WIDTH OF ALL POINTS OF INGRESS/EGRESS.
5. WASHING: WHEN NECESSARY, VEHICLE WHEELS SHALL BE CLEANED TO REMOVE SEDIMENT PRIOR TO ENTRANCE ONTO PUBLIC ROADWAY. WHEN WASHING IS REQUIRED, IT SHALL BE DONE ON AN AREA STABILIZED WITH CRUSHED STONE AND DRAINS INTO AN APPROVED TRAP OR SEDIMENT BASIN. ALL SEDIMENT SHALL BE PREVENTED FROM ENTERING ANY STORM DRAIN, DITCH OR WATERCOURSE USING APPROVED METHODS.
6. MAINTENANCE: THE ENTRANCE SHALL BE MAINTAINED IN A CONDITION THAT WILL PREVENT TRACKING OR FLOWING OF SEDIMENT ONTO PUBLIC ROADWAY. THIS MAY REQUIRE PERIODIC TOP DRESSING WITH ADDITIONAL STONE AS CONDITIONS DEMAND, AS WELL AS REPAIR AND CLEAN OUT OF ANY MEASURE DEVICES USED TO TRAP SEDIMENT. ALL SEDIMENTS THAT IS SPILLED, DROPPED, WASHED OR TRACKED ONTO PUBLIC ROADWAY MUST BE REMOVED IMMEDIATELY.
7. DRAINAGE: ENTRANCE MUST BE PROPERLY GRADED OR INCORPORATE A DRAINAGE SWALE TO PREVENT RUNOFF FROM LEAVING THE CONSTRUCTION SITE.

CITY OF AUSTIN WATERSHED PROTECTION DEPARTMENT	STABILIZED CONSTRUCTION ENTRANCE	
RECORD COPY SIGNED BY J. PATRICK MURPHY 5/23/00 ADOPTED	THE ARCHITECT/ENGINEER ASSUMES RESPONSIBILITY FOR APPROPRIATE USE OF THIS STANDARD.	STANDARD NO. 641S–1

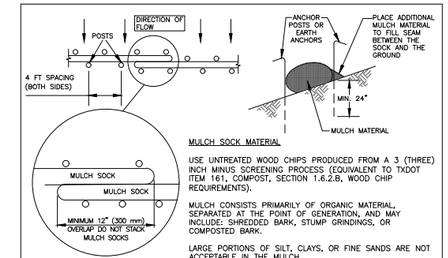

MULCH SOCK MATERIAL

USE UNTREATED WOOD CHIPS PRODUCED FROM A 3 (THREE) INCH MINUS SCREENING PROCESS (EQUIVALENT TO TXDOT ITEM 161, COMPOST, SECTION 1.6.2.B, WOOD CHIP REQUIREMENTS).

MULCH CONSISTS PRIMARILY OF ORGANIC MATERIAL, SEPARATED AT THE POINT OF GENERATION, AND MAY INCLUDE: SHREDDED BARK, STUMP GRINDINGS, OR COMPOSTED BARK.

LARGE PORTIONS OF SILT, CLAYS, OR FINE SANDS ARE NOT ACCEPTABLE IN THE MULCH.

NOTES:

1. STEEL OR WOOD POSTS WHICH SUPPORT THE MULCH SOCK SHALL BE INSTALLED ON A SLIGHT ANGLE TOWARD THE ANTICIPATED RUNOFF SOURCE. POST MUST BE EMBEDDED A MINIMUM OF 600mm (24 inches). IF WOOD POSTS CANNOT ACHIEVE 600mm (24 inches) DEPTH, USE STEEL POSTS. EARTH ANCHORS ARE ALSO ACCEPTABLE.
2. THE TOE OF THE MULCH SOCK SHALL BE PLACED SO THAT THE MULCH SOCK IS FLAT AND PERPENDICULAR TO THE LINE OF FLOW. IN ORDER TO PREVENT WATER FROM FLOWING BETWEEN THE JOINTS OF ADJACENT ENDS OF MULCH SOCKS, LAP THE ENDS OF ADJACENT MULCH SOCKS A MINIMUM OF 300mm (12 inches).
3. MULCH MATERIAL MUST BE FREE OF REFUSE, PHYSICAL CONTAMINANTS, AND MATERIAL TOXIC TO PLANT GROWTH; IT IS NOT ACCEPTABLE FOR THE MULCH MATERIAL TO CONTAIN GROUND CONSTRUCTION DEBRIS, BIOSOLIDS, OR MANURE.
4. SOCK MATERIAL WILL BE 100% BIODEGRADABLE, PHOTODEGRADABLE, OR RECYCLABLE SUCH AS BURLAP, TWINE, UV PHOTOBIODEGRADABLE PLASTIC, POLYESTER, OR ANY OTHER ACCEPTABLE MATERIAL.
5. MULCH SOCKS SHOULD BE USED AT THE BASE OF SLOPES NO STEEPER THAN 2:1 AND SHOULD NOT EXCEED THE MAXIMUM SPACING CRITERIA PROVIDED IN CITY OF AUSTIN ENVIRONMENTAL CRITERIA MANUAL TABLE 1.4.5.F.1 FOR A GIVEN SLOPE CATEGORY.
6. ACCUMULATED SILT SHALL BE REMOVED WHEN IT REACHES A DEPTH OF 150mm (6 inches). THE SILT SHALL BE DISPOSED OF ON AN APPROVED SITE AND IN SUCH A MANNER THAT WILL NOT CONTRIBUTE TO ADDITIONAL SILTATION.

CITY OF AUSTIN WATERSHED PROTECTION DEPARTMENT	MULCH SOCK	
RECORD COPY SIGNED BY MORGAN BYARS 08/24/2010 ADOPTED	THE ARCHITECT/ENGINEER ASSUMES RESPONSIBILITY FOR APPROPRIATE USE OF THIS STANDARD.	STANDARD NO. 648S–1

CAS CONSULTING AND SERVICES, INC.
7908 CAMERON ROAD
AUSTIN, TEXAS 78754
REG. No. F–003572

STATE OF TEXAS
MICHAEL C. MERIWETHER
58563
LICENSED PROFESSIONAL ENGINEER
06/07/2021

CITY OF AUSTIN
GOOD GOVERNMENT
1839

GENERAL PERMIT OFFICE
EROSION/SEDIMENTATION CONTROL
CITY OF AUSTIN STANDARD NOTES AND DETAILS

GENERAL PERMIT PROGRAM

REVISIONS

NO.	BY	DATE	REMARKS
	MCM	10/5/18	ISSUED AS BID

SHEET INFORMATION
DATE MARCH 2018
SHEET C-4 OF 106
CAD REF. NO.

GENERAL PERMIT PROGRAM (GPP) STANDARD ENVIRONMENTAL NOTES:

ADDITIONAL AREAS:

ANY ADDITIONAL AREAS REQUIRED FOR CONSTRUCTION OF THIS PROJECT SHALL BE THE SOLE RESPONSIBILITY OF THE CONTRACTOR. CONTRACTOR MUST SECURE CITY OF AUSTIN APPROVAL OF PROPOSED ADDITIONAL AREAS PRIOR TO USE. APPROVAL OF "CORRECTION REQUEST" MUST BE SECURED FROM THE GENERAL PERMIT PROGRAM OFFICE OF THE PLANNING AND DEVELOPMENT REVIEW DEPARTMENT.

ALL ASSOCIATED PERMITS AND FEES SHALL BE THE SOLE RESPONSIBILITY OF THE CONTRACTOR.

IN ORDER TO SECURE APPROVAL FOR USE OF ADDITIONAL AREAS, CONTRACTOR MUST PROVIDE COMPLETE "CORRECTION REQUEST" SUBMITTAL TO GENERAL PERMIT PROGRAM OFFICE AND ALLOW A ONE WEEK COMMENT PERIOD FOR EACH REVIEW. CONTRACTOR SHOULD REQUEST INFORMATION ON THE ELEMENTS REQUIRED TO BE INCLUDED IN THE SUBMITTAL FROM THE OWNER'S REPRESENTATIVE OR THE GENERAL PERMIT PROGRAM OFFICE.

CONTRACTOR MUST INSTALL AND MAINTAIN EROSION/SEDIMENTATION CONTROLS AND TREE PROTECTION FOR ALL SUCH AREAS IN ACCORDANCE WITH THE CITY OF AUSTIN ENVIRONMENTAL CRITERIA MANUAL AND AS INCLUDED IN THE APPROVED SUBMITTAL OR DIRECTED IN THE FIELD BY THE GENERAL PERMIT PROGRAM REPRESENTATIVE.

A SIGNED COPY OF THE PLANS PERMITTED THROUGH THE GENERAL PERMIT PROGRAM MUST BE KEPT ON SITE AND ACCESSIBLE AT ALL TIMES DURING PROJECT CONSTRUCTION.

DEWATERING:

CONTRACTOR IS RESPONSIBLE FOR DEWATERING OF WORK AREA. CONTRACTOR MUST SECURE CITY OF AUSTIN APPROVAL OF PROPOSED DEWATERING PROCEDURES PRIOR TO INSTALLATION OR USE. APPROVAL MUST BE SECURED FROM THE GENERAL PERMIT PROGRAM (GPP) OFFICE OF THE PLANNING AND DEVELOPMENT REVIEW DEPARTMENT. CONTRACTOR MUST PROVIDE COMPLETE SUBMITTAL TO GPP OFFICE AND ALLOW AN ONE WEEK (MIN.) COMMENT PERIOD FOR EACH REVIEW. CONTACT THE GPP OFFICE FOR SUBMITTAL REQUIREMENTS.

FUEL STORAGE:

FUEL STORAGE IS PROHIBITED ON THIS PROJECT. ADDITIONALLY, THE CONTRACTOR IS REQUIRED TO NOTIFY THE GENERAL PERMIT PROGRAM OFFICE IMMEDIATELY FOLLOWING ANY SPILL OF FUEL OR OTHER TOXIC MATERIAL. CONTRACTOR IS REQUIRED TO FOLLOW-UP WITH WRITTEN DOCUMENTATION, INCLUDING A COMPLETE DESCRIPTION OF THE INCIDENT, MATERIAL SPILLED, AND ACTIONS TAKEN TO CONTAIN AND CLEAN-UP MATERIAL.

FUGITIVE DUST CONTROL:

ALL PROJECTS APPROVED THROUGH THE GENERAL PERMIT PROGRAM (GPP) MUST COMPLY WITH THE CODE OF THE CITY OF AUSTIN AND THE ENVIRONMENTAL CRITERIA MANUAL REQUIREMENTS TO CONTROL AIRBORNE DUST. COMPLIANCE IS REQUIRED FOR ENTIRE PROJECT SITE AS WELL AS ASSOCIATED OPERATIONS. CONTACT THE GPP OFFICE FOR RECOMMENDED CONTROL METHODS.

SPOILS STORAGE:

NO SPOILS STORAGE IS ALLOWED WITHIN A CRITICAL WATER QUALITY ZONE, A 100-YEAR FLOODPLAIN, OR ON A SLOPE WITH A GRADIENT OF MORE THAN 15 PERCENT.

E/S CONTROLS FOR BORE / RECEIVING PIT LOCATIONS:

TEMPORARY E/S CONTROLS MUST SURROUND THE ENTIRETY OF BORING OPERATIONS, INCLUDING PIT, EQUIPMENT, ETC. FOR LOCATIONS WITHIN IMPERVIOUS AREAS, TEMPORARY CONTROL WILL BE TRIANGULAR FILTER DIKE (COA STANDARD DETAIL #628S). DIKE FLAP WILL BE CONTINUOUSLY WEIGHTED DOWN THROUGH THE USE OF 1" BY 4" WOOD STRIPS NAILED TO THE PAVEMENT, EXCEPT FOR THE ACCESS POINT. PLACEMENT OF TEMPORARY E/S CONTROLS ACROSS ACCESS POINT WILL BE REQUIRED WHENEVER THE SITE IS NOT ACTIVELY USED. FOR LOCATIONS WITHIN PERVIOUS AREAS, TEMPORARY CONTROL WILL BE SILT FENCE (COA STANDARD DETAIL #642S-1) OR MULCH SOCKS (MULCH SOCKS DETAIL ON SHEET C-004) AS INDICATED ON APPROVED PLANS.

SOIL RETENTION BLANKET:

UNLESS OTHERWISE INDICATED IN THE PROJECT DOCUMENTS, INSTALLATION OF SOIL RETENTION BLANKET WILL BE REQUIRED FOR ALL IMPACTED SLOPES GREATER THAN 3:1 AND ALL IMPACTED AREAS WITHIN DRAINAGE CONVEYANCES. (CITY OF AUSTIN STANDARD SPECIFICATION ITEM 605S) SOIL RETENTION BLANKET SUBMITTAL MUST BE APPROVED BY PROJECT ENGINEER AND GENERAL PERMIT PROGRAM (GPP) REPRESENTATIVE PRIOR TO USE AND MUST INCLUDE PRODUCT AND INSTALLATION DETAILS PROVIDED BY MANUFACTURER. FINISH GRADING MUST BE INSPECTED AND APPROVED BY GPP INSPECTOR PRIOR TO BLANKET INSTALLATION. INSTALLATION MUST BE IN ACCORDANCE WITH MANUFACTURER'S RECOMMENDATIONS AND MUST BE INSPECTED AND APPROVED BY GPP REPRESENTATIVE PRIOR TO ACCEPTANCE.

SOD INSTALLATION:

REVEGETATION WITHIN MANAGED TURF AREAS MUST BE ACCOMPLISHED THROUGH THE INSTALLATION OF SOLID BLOCK GRASS SOD. SOD TYPE MUST MATCH ADJACENT GRASS TYPE. QUESTIONS REGARDING SOD TYPE WILL BE RESOLVED BY THE GENERAL PROGRAM PERMIT REPRESENTATIVE. REFER TO CITY OF AUSTIN STANDARD SPECIFICATION ITEM NO. 602S: SODDING FOR EROSION CONTROL, UNLESS OTHERWISE NOTED ON THE APPROVED PLANS.

TxDOT RIGHTS-OF-WAY:

TOPSOIL (TxDOT ITEM NO. 160), SOIL RETENTION BLANKET (TxDOT ITEM NO. 169), AND REVEGETATION (TxDOT ITEM NO. 164) INSTALLED WITHIN TEXAS DEPARTMENT OF TRANSPORTATION (TxDOT) RIGHT-OF-WAY SHALL COMPLY WITH "REQUIREMENTS FOR INSTALLATION OF UTILITIES WITHIN THE STATE RIGHT-OF-WAY, AUSTIN DISTRICT".

PROJECT SEQUENCE:
(REFER TO FULL PLAN SET FOR PROJECT-SPECIFIC ADDITIONS, IF APPLICABLE.)

PRIOR TO CONSTRUCTION:

1. SECURE APPLICABLE COA PERMITS, INCLUDING APPROVAL UNDER GENERAL PERMIT AND UTILITY STREET CUT PERMIT.
2. NOTIFY GENERAL PERMIT PROGRAM REPRESENTATIVE PRIOR TO PLACEMENT OF E/S CONTROLS AND TREE PROTECTION FENCING. ALL PROPOSED PHASING OF CONTROLS MUST BE SUBMITTED TO AND APPROVED BY THE GENERAL PERMIT PROGRAM REPRESENTATIVE PRIOR TO THE FIELD PRE-CONSTRUCTION CONFERENCE.
3. NOTIFY COA TEMPORARY TRAFFIC CONTROL REPRESENTATIVE PRIOR TO PLACEMENT OF TEMPORARY TRAFFIC CONTROLS. ALL PROPOSED PHASING OF CONTROLS MUST BE INDICATED ON APPROVED TEMPORARY TRAFFIC CONTROL PLAN AND SEALED BY PROFESSIONAL ENGINEER.
4. PLACE TEMPORARY E/S CONTROLS AND TREE PROTECTION FENCING PRIOR TO BEGINNING ANY EXCAVATION. INSTALL C.I.P. SIGN, IF APPLICABLE.
5. HOLD ENVIRONMENTAL PRE-CONSTRUCTION CONFERENCE ON SITE WITH THE CONTRACTOR, OWNER'S REPRESENTATIVE, AND GENERAL PERMIT PROGRAM REPRESENTATIVE AFTER INSTALLATION OF E/S CONTROLS AND TREE PROTECTION FENCING AND PRIOR TO ANY TRENCHING OPERATIONS.
6. PLACE TEMPORARY TRAFFIC CONTROL DEVICES.

PROJECT CONSTRUCTION:

1. BEGIN CONSTRUCTION. NOTIFY GENERAL PERMIT PROGRAM REPRESENTATIVE A MINIMUM OF 48 HOURS IN ADVANCE OF TRANSITION BETWEEN PHASES.
2. CONTACT GENERAL PERMIT OFFICE TO SCHEDULE FIELD INSPECTION PRIOR TO BEGINNING INSTALLATION OF PERMANENT E/S CONTROLS.
3. COMPLETE RESTORATION OF ALL AREAS DISTURBED BY CONSTRUCTION ACTIVITIES FOR THIS PROJECT. (PERMANENT E/S CONTROLS)
4. REMOVE TEMPORARY TRAFFIC CONTROL DEVICES RELATED TO WORK AREAS OUTSIDE OF THE STREET.
5. HOLD ENVIRONMENTAL POST-CONSTRUCTION CONFERENCE ON SITE WITH THE CONTRACTOR, OWNER'S REPRESENTATIVE, AND GENERAL PERMIT PROGRAM REPRESENTATIVE. ALL PERMANENT E/S CONTROLS MUST BE ACCEPTED BY THE GENERAL PERMIT PROGRAM REPRESENTATIVE. PERMANENT CONTROLS SHALL CONSIST OF REVEGETATION PER DETAILS 602, 604S, AND 609S AS INDICATED ON APPROVED PLANS.
6. FOLLOWING FINAL ACCEPTANCE OF PERMANENT E/S CONTROLS BY THE GENERAL PERMIT PROGRAM REPRESENTATIVE, REMOVE TEMPORARY E/S CONTROLS. CLEAN EXISTING STORM DRAINAGE SYSTEMS AS NECESSARY DUE TO CONSTRUCTION OPERATIONS.
7. DRESS-UP AND RESTORE ANY AREAS DISTURBED BY REMOVAL OF TEMPORARY E/S CONTROLS DESCRIBED ABOVE.

REQUIRED SUBMITTALS:

SUBMITTALS REQUIRED TO BE APPROVED BY GENERAL PERMIT PROGRAM REPRESENTATIVE INCLUDE: SUBMITTALS TRIGGERED BY CITY OF AUSTIN SERIES 600 SPECIFICATIONS AND RELATED SPECIAL PROVISIONS/SPECIFICATIONS, CONSTRUCTION SCHEDULE, TREE PROTECTION, P-6 AND OTHER ROOT ZONE PROTECTION/MITIGATION MEASURES, DEWATERING PLAN, WATERING SCHEDULE FOR REVEGETATION AREAS, AND ANY VEGETATIVE REPLACEMENT PROPOSALS, IF NOT ALREADY PART OF THE PERMITTED PLAN SET.

CITY OF AUSTIN – STANDARD NOTES TREE AND NATURAL AREA PROTECTION (MODIFIED FOR USE ON GENERAL PERMIT PROJECTS)

1. ALL TREES AND NATURAL AREAS SHOWN ON PLAN TO BE PRESERVED SHALL BE PROTECTED DURING CONSTRUCTION WITH TEMPORARY MEASURES.
2. PROTECTIVE MEASURES SHALL BE INSTALLED ACCORDING TO CITY OF AUSTIN STANDARDS FOR TREE PROTECTION.
3. PROTECTIVE MEASURES SHALL BE INSTALLED PRIOR TO THE START OF ANY SITE PREPARATION WORK (CLEARING, GRUBBING OR GRADING), AND SHALL BE MAINTAINED THROUGHOUT ALL PHASES OF THE PROJECT.
4. EROSION AND SEDIMENTATION CONTROL MEASURES SHALL BE INSTALLED OR MAINTAINED IN A MANNER WHICH DOES NOT RESULT IN SOIL BUILD-UP, COMPACTION OR CUTTING OF CRITICAL ROOT ZONE WITHIN TREE DRIP LINES.
5. TREE PROTECTION SHALL COMPLETELY SURROUND THE TREES OR GROUP OF TREES AND WILL BE LOCATED AT THE OUTERMOST LIMIT OF BRANCHES (DRIP LINE). FOR NATURAL AREAS, PROTECTIVE MEASURES SHALL FOLLOW THE LIMIT OF CONSTRUCTION LINE, IN ORDER TO PREVENT THE FOLLOWING:
   - A. SOIL COMPACTION IN THE ROOT ZONE AREA RESULTING FROM VEHICULAR TRAFFIC OR STORAGE OF EQUIPMENT OR MATERIALS;
   - B. ROOT ZONE DISTURBANCES DUE TO GRADE CHANGES (GREATER THAN 6 INCHES CUT OR FILL) OR TRENCHING NOT REVIEWED AND AUTHORIZED BY THE GENERAL PERMIT PROGRAM OFFICE OF THE PLANNING AND DEVELOPMENT REVIEW DEPARTMENT;
   - C. WOUNDS TO EXPOSED ROOTS, TRUNK OR LIMBS BY MECHANICAL EQUIPMENT;
   - D. OTHER ACTIVITIES DETRIMENTAL TO TREES SUCH AS CHEMICAL STORAGE, CEMENT TRUCK CLEANING, AND FIRES.
6. EXCEPTIONS TO INSTALLING PROTECTIVE FENCES AT CRITICAL ROOT ZONES MAY BE PERMITTED IN THE FOLLOWING CASES:
   - A. WHERE THERE IS TO BE AN APPROVED GRADE CHANGE, IMPERMEABLE PAVING SURFACE, TREE WELL, OR OTHER SUCH SITE DEVELOPMENT, ERECT THE FENCE APPROXIMATELY 2 FEET BEYOND THE AREA DISTURBED;
   - B. WHERE PERMEABLE PAVING IS TO BE INSTALLED, ERECT THE FENCE AT THE OUTER LIMITS OF THE PERMEABLE PAVING AREA
   - C. WHERE TREES ARE CLOSE TO PROPOSED BUILDINGS, ERECT THE FENCE NO CLOSER THAN 6 FEET TO THE BUILDING
   - D. WHERE THERE ARE SEVERE SPACE CONSTRAINTS DUE TO TRACT SIZE, OR OTHER SPECIAL REQUIREMENTS, CONTACT THE GENERAL PERMIT PROGRAM OFFICE AT 974-6330 TO DISCUSS ALTERNATIVES.

SPECIAL NOTE: FOR THE PROTECTION OF NATURAL AREAS, NO EXCEPTIONS TO INSTALLING FENCES AT THE LIMIT OF CONSTRUCTION LINE WILL BE PERMITTED.

WHERE ANY OF THE ABOVE EXCEPTIONS RESULT IN A FENCE 5 FEET OR CLOSER TO A TREE TRUNK, PROTECT THE TRUNK WITH STRAPPED-ON PLANKING TO A HEIGHT OF 8 FEET (OR TO THE LIMITS OF LOWER BRANCHING) IN ADDITION TO THE REDUCED FENCING.

7. WHERE ANY OF THE ABOVE EXCEPTIONS RESULT IN AREAS OF UNPROTECTED ROOT ZONES, THOSE AREAS SHOULD BE COVERED WITH 12 INCHES OF ORGANIC MULCH TO MINIMIZE SOIL COMPACTION DURING CONSTRUCTION. FILTER FABRIC UNDERLAYMENT MAY BE REQUIRED AT DIRECTION OF GENERAL PERMIT PROGRAM REPRESENTATIVE BASED ON SITE CONDITIONS AND CONSTRUCTION ACTIVITIES. MAXIMUM FOUR (4) INCHES DEPTH MAY BE LEFT IN PLACE AFTER CONSTRUCTION WITH APPROVAL FROM THE GENERAL PERMIT PROGRAM REPRESENTATIVE.
8. ALL GRADING WITHIN PROTECTED ROOT ZONE AREAS SHALL BE DONE BY HAND OR WITH SMALL EQUIPMENT TO MINIMIZE ROOT DAMAGE. PRIOR TO GRADING, RELOCATE PROTECTIVE FENCES TO 2 FEET BEHIND THE GRADE CHANGE AREA.
9. ANY ROOTS EXPOSED BY CONSTRUCTION ACTIVITY SHALL BE PRUNED FLUSH WITH THE SOIL. BACKFILL ROOT AREAS WITH GOOD QUALITY TOP SOIL AS SOON AS POSSIBLE. IF EXPOSED ROOT AREAS ARE NOT BACKFILLED WITHIN 2 DAYS, COVER THEM WITH ORGANIC MATERIAL IN A MANNER WHICH REDUCES SOIL TEMPERATURE AND MINIMIZES WATER LOSS DUE TO EVAPORATION.
10. PRIOR TO EXCAVATION OR GRADE CUTTING WITHIN TREE DRIPLINES, MAKE A CLEAN CUT BETWEEN THE DISTURBED AND UNDISTURBED ROOT ZONES WITH A ROCK SAW OR SIMILAR EQUIPMENT TO MINIMIZE DAMAGE TO REMAINING ROOTS.
11. TREES MOST HEAVILY IMPACTED BY CONSTRUCTION ACTIVITIES SHOULD BE WATERED DEEPLY ONCE A WEEK DURING PERIODS OF HOT, DRY WEATHER. TREE CROWNS SHOULD BE SPRAYED WITH WATER PERIODICALLY TO REDUCE DUST ACCUMULATION ON THE LEAVES.
12. ANY TRENCHING REQUIRED FOR THE INSTALLATION OF LANDSCAPE IRRIGATION SHALL BE PLACED AS FAR FROM EXISTING TREE TRUNKS AS POSSIBLE.
13. NO LANDSCAPE TOPSOIL DRESSING GREATER THAN 4 INCHES SHALL BE PERMITTED WITHIN THE DRIPLINE OF TREES. NO SOIL IS PERMITTED ON THE ROOT FLARE OF ANY TREE.
14. PRUNING TO PROVIDE CLEARANCE FOR STRUCTURES, VEHICULAR TRAFFIC AND EQUIPMENT SHALL TAKE PLACE BEFORE CONSTRUCTION BEGINS. SEE NOTE THREE (3) OF SUPPLEMENTAL TREE PROTECTION NOTES FOR ADDITIONAL REQUIREMENTS.
15. ALL FINISHED PRUNING MUST BE DONE ACCORDING TO RECOGNIZED, APPROVED STANDARDS OF THE INDUSTRY (REFERENCE THE NATIONAL ARBORIST ASSOCIATION PRUNING STANDARDS FOR SHADE TREES AVAILABLE ON REQUEST FROM THE GENERAL PERMIT PROGRAM OFFICE).
16. DEVIATIONS FROM THE ABOVE NOTES MAY BE CONSIDERED ORDINANCE VIOLATIONS IF THERE IS SUBSTANTIAL NONCOMPLIANCE OR IF A TREE SUSTAINS DAMAGE AS A RESULT.
17. TREES APPROVED FOR REMOVAL SHALL BE REMOVED IN A MANNER WHICH DOES NOT IMPACT TREES TO BE PRESERVED.

SUPPLEMENTAL TREE PROTECTION NOTES

1. ALL TREE PROTECTION MUST COMPLY WITH CITY OF AUSTIN REQUIREMENTS AS OUTLINED IN THE ENVIRONMENTAL CRITERIA MANUAL AND AS INDICATED BY STANDARD COA NOTES AND DETAILS INCLUDED WITHIN THIS DOCUMENT SET. CONTRACTOR SHALL INSTALL PROTECTION PRIOR TO PRE-CONSTRUCTION CONFERENCE, MAKE ADJUSTMENTS TO PROTECTION AS DIRECTED BY THE GPP REPRESENTATIVE, AND MAINTAIN PROTECTION UNTIL PROJECT IS COMPLETE.
2. TYPE AND LOCATION OF ALL TREE PROTECTION MUST BE APPROVED IN THE FIELD BY THE GENERAL PERMIT PROGRAM (GPP) INSPECTOR PRIOR TO CONSTRUCTION.
3. WALK-THROUGH: CONTRACTOR SHALL CONDUCT WALK-THROUGH MEETING WITH GENERAL PERMIT PROGRAM REPRESENTATIVE PRIOR TO PERFORMING ANY PRUNING ACTIVITIES ON TREES IN PROJECT AREA. PURPOSE OF WALK-THROUGH WILL BE TWOFOLD. ONE PURPOSE WILL BE TO DETERMINE THE MINIMUM AMOUNT OF PRUNING NECESSARY TO ALLOW CONSTRUCTION WORK TO BE COMPLETED. SECOND PURPOSE WILL BE TO DETERMINE AREAS OF PROJECT IN WHICH EXHAUST DIVERTERS WILL BE REQUIRED ON CONSTRUCTION EQUIPMENT TO PREVENT SCORCHING OF EXISTING TREES.
4. ALL PRUNING MUST BE PERFORMED IN ACCORDANCE WITH ANSI A300 (PART 1) – 2001 AMERICAN NATIONAL STANDARD FOR TREE CARE OPERATIONS (PRUNING), OR LATEST APPROVED VERSION. THIS DOCUMENT MAY BE OBTAINED ONLINE FOR A FEE AT WWW.ANSI.ORG.
5. PRUNING SHALL BE DONE WITH CLEAN, SHARP TOOLS. TO PREVENT BARK TEARS, THE WEIGHT OF THE BRANCH SHALL BE REMOVED BEFORE MAKING FINAL PRUNING CUT.
6. ALL PRUNING SHALL PRESERVE THE NATURAL CHARACTER OF THE TREE.
7. ONLY COLLAR CUTS ARE ACCEPTABLE. NO FLUSH CUTS OR STUB CUTS WILL BE ALLOWED.
8. ALL BRANCHES THAT ARE BROKEN OR DAMAGED DURING CONSTRUCTION SHALL BE REMOVED.
9. PRUNING CUTS OR DAMAGED AREAS ON AN OAK TREE SHALL BE PAINTED WITHIN FIVE MINUTES WITH A STANDARD TREE WOUND DRESSING. TREE WOUND DRESSING SHALL BE EITHER TREEKOTE AEROSOL OR TANGLEFOOT PRUNING SEALER (OR APPROVED EQUAL). THIS ALSO APPLIES TO WOUNDS CREATED BY CONSTRUCTION VEHICLES OR EQUIPMENT. ALL PRUNING MUST BE IN ACCORDANCE WITH COA OAK WILT PREVENTION POLICY.
10. ANY TREE ROOTS THAT ARE EXPOSED, CUT, OR TORN DURING CONSTRUCTION ACTIVITY SHALL BE PRUNED FLUSH WITH THE SURROUNDING SOIL. (REFER ALSO TO NUMBER 9 OF THE TREE AND NATURAL AREA PROTECTION NOTES INCLUDED IN THIS PLAN SET.)
11. ALL TRENCHING WITHIN THE CRITICAL ROOT ZONE OF A TREE TO BE PRESERVED WILL BE SAW CUT OR EXCAVATED BY HAND, AS APPROVED BY THE GENERAL PERMIT PROGRAM ARBORIST.

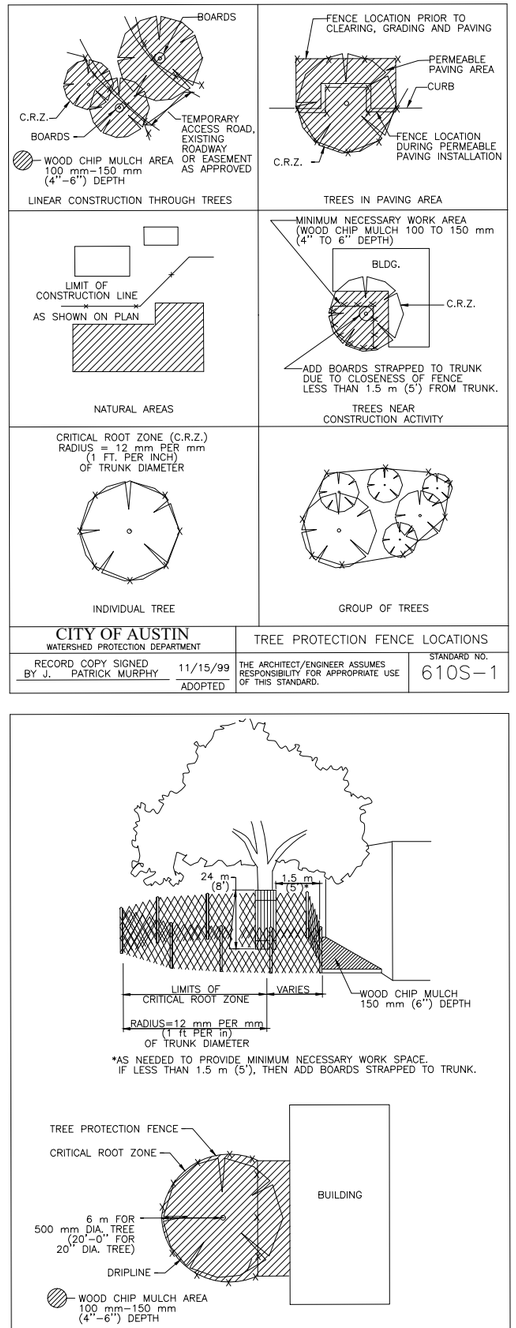

CITY OF AUSTIN WATERSHED PROTECTION DEPARTMENT		TREE PROTECTION FENCE LOCATIONS	
RECORD COPY SIGNED BY J. PATRICK MURPHY	11/15/99 ADOPTED	THE ARCHITECT/ENGINEER ASSUMES RESPONSIBILITY FOR APPROPRIATE USE OF THIS STANDARD.	STANDARD NO. 610S-1

CITY OF AUSTIN WATERSHED PROTECTION DEPARTMENT		TREE PROTECTION FENCE MODIFIED TYPE A – CHAIN LINK	
RECORD COPY SIGNED BY J. PATRICK MURPHY	11/15/99 ADOPTED	THE ARCHITECT/ENGINEER ASSUMES RESPONSIBILITY FOR APPROPRIATE USE OF THIS STANDARD.	STANDARD NO. 610S-4

12. REFER TO ENVIRONMENTAL CRITERIA MANUAL APPENDIX P-6 FOR FURTHER REMEDIAL TREE CARE REQUIREMENTS. P-6 REMEDIAL TREE CARE WILL BE COORDINATED WITH AND APPROVED BY THE GENERAL PERMIT PROGRAM ARBORIST FOR PROJECTS PERMITTED THROUGH THE GENERAL PERMIT PROGRAM.

CAS CONSULTING AND SERVICES, INC.
7908 CAMERON ROAD
AUSTIN, TEXAS 78754
REG. No. F-003572

STATE OF TEXAS 58563 LICENSED PROFESSIONAL ENGINEER
06/07/2021

GENERAL PERMIT OFFICE
TREE PROTECTION
AND ENVIRONMENTAL NOTES
CITY OF AUSTIN STANDARD NOTES AND DETAILS

REVISIONS

NO.	BY	DATE	REMARKS
	MCM	10/5/18	ISSUED AS BID

SHEET INFORMATION
DATE DECEMBER 2017
SHEET C-5 OF 106
CAD REF. NO. TP-ENVIRO.DWG

GENERAL PERMIT PROGRAM

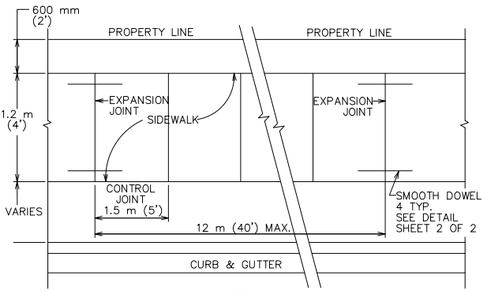

PLAN

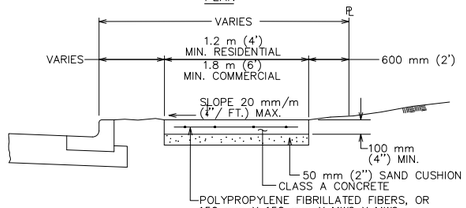

POLYPROPYLENE FIBRILLATED FIBERS, OR 150 mm X 150 mm X MW9 X MW9 (6" X 6" X W1.4 X W1.4) WELDED WIRE FABRIC OR ONE LAYER 10M (#3) BARS PLACED NOT MORE THAN 450 mm (18") C.C. BOTH DIRECTIONS.
REINFORCEMENT SHALL ACCURATELY PLACED AT SLAB MID-DEPTH AND HELD FIRMLY IN PLACE BY MEANS OF BAR SUPPORTS OF ADEQUATE STRENGTH AND NUMBER THAT WILL PREVENT DISPLACEMENT AND KEEP THE STEEL AT ITS PROPER POSITION DURING THE PLACEMENT OF THE P.C. CONCRETE. IN NO INSTANCE SHALL THE STEEL BE PLACED DIRECTLY ON THE SUBGRADE OR SAND CUSHION LAYER.

SECTION

CITY OF AUSTIN DEPARTMENT OF PUBLIC WORKS		SIDEWALK	
RECORD COPY SIGNED BY BILL GARDNER	03/26/08 ADOPTED	THE ARCHITECT/ENGINEER ASSUMES RESPONSIBILITY FOR APPROPRIATE USE OF THIS STANDARD.	STANDARD NO. 432S-1 1 OF 3

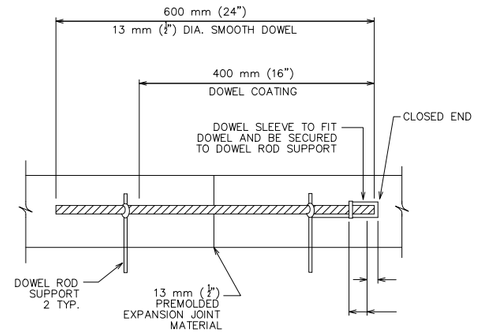

DOWEL DETAIL

CITY OF AUSTIN DEPARTMENT OF PUBLIC WORKS		SIDEWALK	
RECORD COPY SIGNED BY BILL GARDNER	03/26/08 ADOPTED	THE ARCHITECT/ENGINEER ASSUMES RESPONSIBILITY FOR APPROPRIATE USE OF THIS STANDARD.	STANDARD NO. 432S-1 2 OF 3

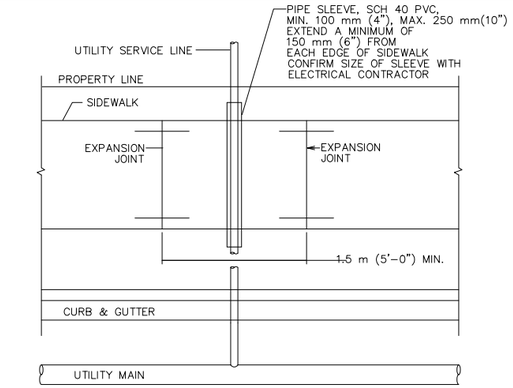

SIDEWALK OVER UTILITY SERVICE LINE PLAN

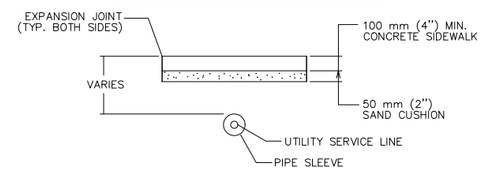

SECTION OF SIDEWALK OVER
UTILITY SERVICE LINES

NOTES:
1. THIS STANDARD APPLIES TO THE INSTALLATION OF NEW UTILITIES OR UTILITIES BEING REPLACED BY A NEW LINE.
2. NO JOINTS IN UTILITY SERVICE PIPE TO BE LOCATED INSIDE PVC PIPE SLEEVE.

CITY OF AUSTIN DEPARTMENT OF PUBLIC WORKS		SIDEWALK	
RECORD COPY SIGNED BY BILL GARDNER	03/26/08 ADOPTED	THE ARCHITECT/ENGINEER ASSUMES RESPONSIBILITY FOR APPROPRIATE USE OF THIS STANDARD.	STANDARD NO. 432S-1 3 OF 3

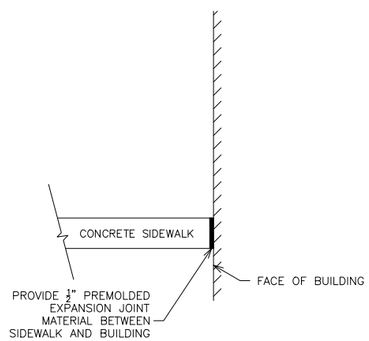

SIDEWALK/BUILDING INTERFACE

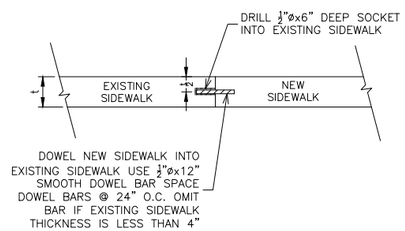

EXISTING TO NEW SIDEWALK CONNECTION

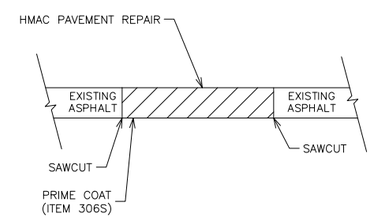

NOTES:
1. HMAC TYPE AND THICKNESS SHALL MATCH EXISTING (2" MIN)
2. TACK COAT ALL EXPOSED EDGES (ITEM 307S)

ASPHALT REPAIR

CAS CONSULTING AND SERVICES, INC.
7908 CAMERON ROAD
AUSTIN, TEXAS 78754
REG. No. F-003572

CP&Y, INC.
TBPE FIRM REGISTRATION NO. F-1741

CITY OF AUSTIN

05/26/2021

NO.	REVISION	BY	DATE

VERIFY SCALE 0 1"
BAR IS ONE INCH ON ORIGINAL DRAWING. IF NOT ONE INCH ON THIS SHEET, ADJUST SCALE

CITY OF AUSTIN – AUSTIN WATER
HORNSBY BEND BMP CENTRIFUGES

CIVIL DETAILS

Date: APRIL 2021
Designed: M.MERIWETHER
Drawn: J.WILLIG
Reviewed: M.MERIWETHER
CP&Y Proj. AUST1600646.01

SHEET
C-6

REFERENCES: AUST1600646.01 Border Base
May 06, 2021 – 9:04am \\cas-dataserver\water\ACTIVE PROJECTS\COA W & WW Facility Engineering RL 2010-2013\CP&Y Hornsby Bend Th Comp\3.0 CAD\AUSTI4010 CAS C-6.dwg

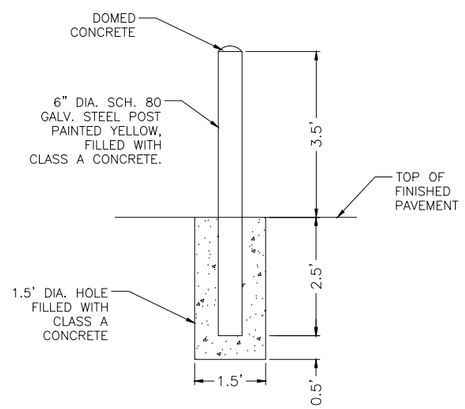

DETAIL D BOLLARD

NOT TO SCALE

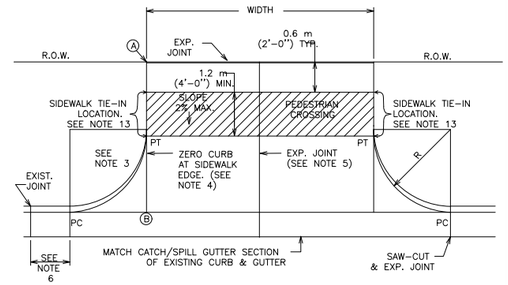

PLAN

NOTE: ALL DRIVEWAYS SHALL BE SLOPED TOWARDS THE STREET FROM THE R.O.W. LINE. ELEVATION OF POINT A ABOVE POINT B IS, TYPICALLY A MINIMUM OF 150 mm (6") PLUS 20 mm/rise/FOOT) OVER DISTANCE "X" IN METERS (FEET).

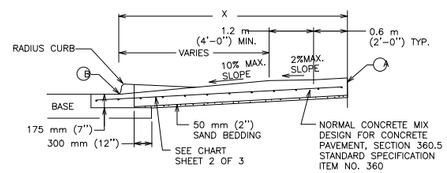

CROSS SECTION

CITY OF AUSTIN DEPARTMENT OF PUBLIC WORKS		TYPE II DRIVEWAY	
RECORD COPY SIGNED BY CUONG TRAN	02/24/10 ADOPTED	THE ARCHITECT/ENGINEER ASSUMES RESPONSIBILITY FOR APPROPRIATE USE OF THIS STANDARD.	STANDARD NO. 433S-2 1 OF 2

USE	THICKNESS	REINFORCEMENT
DRIVEWAYS FOR PASSENGER VEHICLE PARKING LOTS	150 mm (6") MIN.	125 mm (5") MIN. CONCRETE WITH ONE LAYER OF13M (#4) BARS PLACED ON CHAIRS AT MIDDEPTH OF SLAB AT NO MORE THAN 450 mm (18") O.C. BOTH DIRECTIONS
ALL OTHERS	175 mm (7") MIN.	125 mm (5") MIN. CONCRETE WITH ONE LAYER OF13M (#4) BARS PLACED ON CHAIRS AT MIDDEPTH OF SLAB AT NO MORE THAN 450 mm (18") O.C. BOTH DIRECTIONS

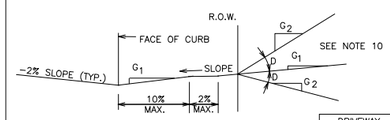

ALLOWABLE GRADES

DRIVEWAY VOLUME (ADT)	D=GRADE CHANGE	
	STD.	MAX
>1500	0%	3%
500-1500	3%	6%
< 500	6%	15%

NOTES:

1. ALL TYPE II DRIVEWAYS SHALL HAVE RADIUS ENDS.
2. DRIVEWAY WIDTHS AND RADII DIMENSIONS, ONE/TWO WAY TRAVEL REQUIREMENTS, AND GEOMETRIC LAY-OUT ARE HIGHLY VARIABLE, SUBJECT TO SITE SPECIFIC CONDITIONS AND REQUIREMENTS. SEE TRANSPORTATION CRITERIA MANUAL, SECTION 5 "DRIVEWAYS".
3. THE DRIVEWAY EDGE SHALL BE SMOOTHLY TRANSITITIONED INTO THE SIDEWALK TIE-IN LOCATION BEGINNING AT THE RADIUS PC LINE.
4. "ZERO" CURB AT PT OR SIDEWALK EDGE, WHICHEVER IS ENCOUNTERED FIRST.
5. PLACE AN EXPANSION JOINT DOWN THE CENTER OF DRIVEWAY ALL DRIVEWAYS.
6. IF DIMENSION IS LESS THAN 1.5 METERS (5 FEET), REMOVE CURB AND GUTTER TO EXISTING JOINT AND POUR MONOLITHICALLY WITH DRIVEWAY.
7. IF THE BASE IS OVER-EXCAVATED WHERE THE CURB AND GUTTER WERE REMOVED, BACKFILL WITH CONCRETE MONOLITHICALLY WITH THE DRIVEWAY.
8. TYPE II DRIVEWAYS ARE TO BE LOCATED NO CLOSER TO THE CORNER OF INTERSECTING RIGHT OF WAY THAN 60% OF PARCEL FRONTAGE AT 30 METERS (100 FEET): WHICHEVER IS LESS.
9. DRIVEWAY SHALL NOT BE CONSTRUCTED WITHIN THE CURB RETURN OF A STREET INTERSECTION.
10. WHILE THE PROPERTY OWNER REMAINS RESPONSIBLE FOR GRADE BREAKS WITHIN PRIVATE PROPERTY, THE FIRE DEPARTMENT SHALL BE CONSULTED WHERE THE DRIVEWAY IS ESSENTIAL TO EMERGENCY VEHICLE ACCESS AND "G2 IS GREATER THAN 15%.
11. USE 12 MM (1/2") ASPHALT BOARD OR OTHER APPROVED MATERIAL FOR CURB AND GUTTER EXPANSION JOINTS. SIDEWALK, AT THE R.O.W. LINE AND AT MIDWIDTH, SEE NOTE 5.
12. SEE TRANSPORTATION CRITERIA MANUAL, SECTION 5 FOR OTHER DRIVEWAY REQUIREMENTS.
13. THE SIDEWALK, REGARDLESS OF ITS LOCATION WITH RESPECT TO THE CURB OR PROPERTY LINE, SHALL BE CONNECTED TO THE DRIVEWAY AT THESE LOCATIONS.
14. WATER METER BOXES AND WASTEWATER CLEAN OUTS ARE PROHIBITED FROM BEING LOCATED IN DRIVEWAY AREAS.

CITY OF AUSTIN DEPARTMENT OF PUBLIC WORKS		TYPE II DRIVEWAY	
RECORD COPY SIGNED BY CUONG TRAN	02/24/10 ADOPTED	THE ARCHITECT/ENGINEER ASSUMES RESPONSIBILITY FOR APPROPRIATE USE OF THIS STANDARD.	STANDARD NO. 433S-2 2 OF 2

CAS CONSULTING AND SERVICES, INC.
7908 CAMERON ROAD
AUSTIN, TEXAS 78754
REG. No. F-003572

CP&Y, INC.
TBPE FIRM REGISTRATION NO. F-1741

CITY OF AUSTIN

05/26/2021

NO.	REVISION	BY	DATE

VERIFY SCALE 0 1"
BAR IS ONE INCH ON ORIGINAL DRAWING. IF NOT ONE INCH ON THIS SHEET, ADJUST SCALE

CITY OF AUSTIN - AUSTIN WATER
HORNSBY BEND BMP CENTRIFUGES

CIVIL DETAILS II

Date: APRIL 2021
Designed: M.MERIWETHER
Drawn: J.WILLIG
Reviewed: M.MERIWETHER
CP&Y Proj: AUST160046.01

SHEET
C-7

REFERENCES: AUST160046.01 Border Base
May 06, 2021 - 9:04am \\cas-dataserver\water\!ACTIVE PROJECTS\COA W & WW Facility Engineering RL 2010-2013\CP&Y Hornsby Bend Th Comp\3.0 CAD\AUSTI4010 CAS C-7A.dwg

ABBREVIATIONS

ABV.	ABOVE
A.C.T.	ACOUSTICAL CEILING TILE
ACM	ALUMINUM COMPOSITE MATERIAL
ADJ.	ADJUSTABLE
A.F.F.	ABOVE FINISH FLOOR
ALUM.	ALUMINUM
ANOD.	ANODIZED
ARCH.	ARCHITECT(URAL)
BLDG.	BUILDING
B.U.R.	BUILT UP ROOF
C.J.	CONTROL JOINT
CLG.	CEILING
CONC.	CONCRETE
CONT.	CONTINUOUS
C.T.	CERAMIC TILE
DIA.	DIAMETER
DK	DARK
D.S.	DOWN SPOUT
DWG.	DRAWING
DW	DISHWASHER
(E)	EXISTING
EXIST.	EXISTING
EA.	EACH
E.J.	EXPANSION JOINT
ELEC.	ELECTRICAL
EL.	ELEVATION
EQ.	EQUAL
EQUIP.	EQUIPMENT
E.W.C.	ELECTRIC WATER COOLER
FIN.	FINISH(ES)(ED)
F.E.	FIRE EXTINGUISHER
F.E.C.	FIRE EXTINGUISHER CABINET
F.D.C.	FIRE DEPARTMENT CONNECTION
F.D.	FLOOR DRAIN
FL.	FLOW
F.O.C.	FACE OF CONCRETE
F.O.F.	FACE OF FINISH
F.O.S.	FACE OF STUD
FRP	FIBERGLASS REINFORCED PLASTIC
GALV.	GALVANIZED
GA.	GAUGE or GAGE
G.C.	GENERAL CONTRACTOR
GYP. BD.	GYPSUM BOARD
H.C.	HOLLOW CORE
H.M.	HOLLOW METAL
HORIZ.	HORIZONTAL
HT.	HEIGHT
I.D.	INSIDE DIAMETER
ISO.	ISOMETRIC
JT.	JOINT
K.S.	KNEE SPACE
LAV.	LAVATORY
MAX.	MAXIMUM
MBM	METAL BUILDING MANUFACTURER
MECH.	MECHANICAL
MET.	METAL
MFR.	MANUFACTURER
M.R.	MOISTURE RESISTANT
MTL.	MATERIAL
(N)	NEW
NAT.	NATURAL
N.I.C.	NOT IN CONTRACT
NOM.	NOMINAL
N.T.S.	NOT TO SCALE
O.C.	ON CENTER
O.D.	OUTSIDE DIAMETER
O.F.	OVERFLOW DRAIN
O.F.C.I.	OWNER FURNISHED CONT'R INSTALLED
OPG.	OPENING
OPP.	OPPOSITE
PR.	PAIR
PRKG.	PARKING
PLAS. LAM	PLASTIC LAMINATE
R.	RISER
RE:	REFER (TO)
REF.	REFRIGERATOR
REINF.	REINFORCE(D)
REQD.	REQUIRED
R.D.	ROOF DRAIN
RND.	ROUND
R.O.	ROUGH OPENING
S.C.	SOLID CORE
S.F.	SQUARE FEET
SIM.	SIMILAR
SPEC.	SPECIFICATIONS
S.S.	STAINLESS STEEL
STD.	STANDARD
STL.	STEEL
STRUCT.	STRUCTURAL
T.	TREAD
T.O.S.	TOP OF STEEL
T.O.C.	TOP OF CONCRETE/CURB
T.O.M.	TOP OF MASONRY
T.O.P.	TOP OF PARAPET
T.O.R.	TOP OF ROOF
T.O.W.	TOP OF WALL
TYP.	TYPICAL
U.N.O.	UNLESS NOTED OTHERWISE
V.C.T.	VINYL COMPOSITION TILE
VERT.	VERTICAL
V.I.F.	VERIFY IN FIELD
V.W.C.	VINYL WALL COVERING
W/	WITH
W.C.	WATER CLOSET
W.H.	WATER HEATER
W.R.	WATER RESISTANT
W.W.F.	WELDED WIRE FABRIC

SYMBOLS LEGEND

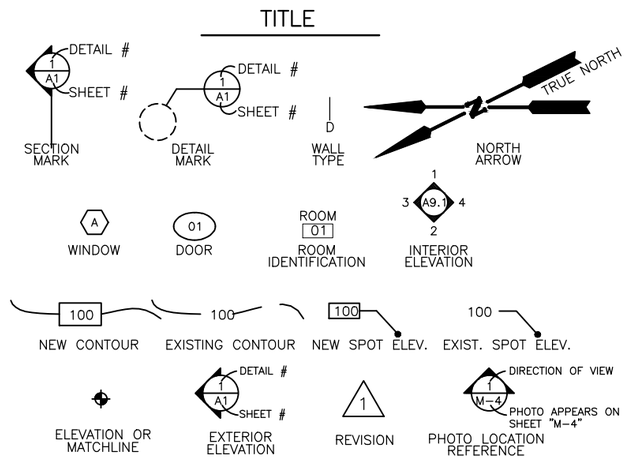

MATERIAL LEGEND

DIRECTION OF VIEW

- RIGID INSULATION
- GYPSUM BOARD (SECTION)
- CONCRETE IN SECTION
- CONCRETE IN PLAN
- PLYWOOD
- WOOD FRAMING/BLOCKING (CONTINUOUS)
- WOOD FRAMING/BLOCKING (NOT CONTINUOUS)
- BRICK — PHOTO APPEARS ON SHEET "M-4"
- MASONRY
- STEEL
- ALUMINUM
- BATT INSULATION
- WOOD (FINISHED)

WALL LEGEND

- EXISTING WALL TO REMAIN
- EXISTING OVERHEAD OBJECT
- EXISTING TO REMOVE
- PROPOSED OVERHEAD OBJECT
- PROPOSED WALL

PROJECT DATA: THICKENER COMPLEX

GOVERNING CODES

2015 INTERNATIONAL ENERGY CONSERVATION CODE
2012 INTERNATIONAL BUILDING CODE
2012 UNIFORM MECHANICAL CODE
2012 UNIFORM PLUMBING CODE
2014 NATIONAL ELECTRIC CODE
2010 INTERNATIONAL FIRE CODE
2010 ADA STANDARDS FOR ACCESSIBLE DESIGN
TEXAS ACCESSIBILITY STANDARD 2012

BUILDING CODE DATA – IBC CHAPTER 3

OCCUPANCY GROUP: UTILITY AND MISCELLANEOUS

U BUILDINGS AND STRUCTURE OF AN ACCESSORY CHARACTER AND MISCELLANEOUS STRUCTURES NOT CLASSIFIED IN ANY SPECIFIC OCCUPANCY (THE THICKENER COMPLEX BUILDING IS AN ENCLOSED UNIT FOR PLANT EQUIPMENT AND IS NOT INTENDED FOR HUMAN OCCUPANCY).

GENERAL BUILDING LIMITATIONS – IBC CHAPTER 5

EXISTING THICKENER COMPLEX BUILDING HEIGHT AND BUILDING AREA (TABLE 503)

TYPE IIB (CONSTRUCTION TYPE PER CURRENT CODE MOST CONSISTENT WITH EXISTING CONDITIONS).

AREA(SF)	16,615
HEIGHT	1 STORY

CONSTRUCTION TYPE – IBC CHAPTER 6

FIRE RESISTIVE REQUIREMENTS FOR BUILDING ELEMENTS (TYPE IIB – TABLE 601)

BEARING WALLS	
INTERIOR	NO REQUIREMENTS
EXTERIOR	NO REQUIREMENTS
NONBEARING WALLS	
EXTERIOR	SEE "EXTERIOR WALL" CODE BELOW
STRUCTURAL FRAME	NO REQUIREMENTS
PARTITIONS PERMANENT	NO REQUIREMENTS
SHAFT ENCLOSURES	NO REQUIREMENTS
FLOOR AND FLOOR/CLG	NO REQUIREMENTS
ROOF AND ROOF/CLG	NO REQUIREMENTS
EXTERIOR DOOR/WIN	NO REQUIREMENTS
STAIRWAY CONST	NO REQUIREMENTS

EXTERIOR WALL/OPENING PROTECTION (TABLE 602 AND 705.8)

EXTERIOR WALLS	1 HOUR GREATER THAN 5, LESS THAN 10 FEET NO RATING 10 FEET OR GREATER
OPENINGS	NOT PERMITTED LESS THAN 5 FEET UNLIMITED UNPROTECTED OPENINGS GREATER THAN 5 FEET

INTERIOR FINISHES – IBC CHAPTER 8

FLAME SPREAD RATINGS OF MATERIALS AND FINISHES (TABLE 803.9)

CLASS A: FLAME SPREAD 0–25, SMOKE DEVELOPED 0–450
CLASS B: FLAME SPREAD 26–75, SMOKE DEVELOPED 0–450
CLASS C: FLAME SPREAD 76–200, SMOKE DEVELOPED 0–450

VERTICAL EXITS AND PASSAGEWAYS	NO RESTRICTIONS
EXIT ACCESS CORRIDORS	NO RESTRICTIONS
ROOMS AND ENCLOSED SPACES	NO RESTRICTIONS

*OCCUPANCY FOR EGRESS CALCULATIONS ONLY. THE ACTUAL NUMBER OF PERSONS BY WHOM THE BUILDING IS OCCUPIABLE PER 2015 UBC, WHOM PLUMBING FIXTURES ARE PROVIDED IS 0.

ACCESSIBILITY NOTES

PER TEXAS ACCESSIBILITY STANDARDS 203.5: "SPACES FREQUENTED ONLY BY SERVICE PERSONNEL FOR MAINTENANCE, REPAIR, OR OCCASIONAL MONITORING OF EQUIPMENT SHALL NOT BE REQUIRED TO COMPLY WITH THESE REQUIREMENTS OR TO BE ON AN ACCESSIBLE ROUTE. MACHINERY SPACES INCLUDE, BUT ARE NOT LIMITED TO, ELEVATOR PITS OR ELEVATOR PENTHOUSES; MECHANICAL, ELECTRICAL OR COMMUNICATIONS EQUIPMENT ROOMS; PIPING OR EQUIPMENT CATWALKS; WATER OR SEWAGE TREATMENT PUMP ROOMS AND STATIONS; ELECTRIC SUBSTATIONS AND TRANSFORMER VAULTS; AND HIGHWAY AND TUNNEL UTILITY FACILITIES." THE ELECTRICAL ROOM IS ACCORDINGLY EXPLICITLY EXEMPTED FROM COMPLIANCE WITH THE TEXAS ACCESSIBILITY STANDARDS.

GENERAL NOTES

1. EXISTING BUILDING DRAWINGS IN THIS SET WERE BASED IN PART ON RECORD INFORMATION THAT MAY NOT HAVE BEEN COMPLETELY ACCURATE, ESPECIALLY IN TERMS OF HIDDEN CONDITIONS. DURING DEMOLITION, IT IS THE RESPONSIBILITY OF THE CONTRACTOR TO BRING ANY DISCREPANCIES OR VARIATIONS TO THE ATTENTION OF THE PROJECT MANAGER AND/OR PROJECT ARCHITECT. NECESSARY MINOR CHANGES TO THE PROPOSED BUILDING MODIFICATIONS ARE ACCEPTABLE WITH THE WRITTEN NOTIFICATION AND APPROVAL OF THE PROJECT MANAGER AND/OR PROJECT ARCHITECT.
2. PATCH AND REPAIR ALL VOIDS OR CAVITIES FROM ITEMS REMOVED OR DEMOLISHED DURING CONSTRUCTION TO AN EQUIVALENT OR GREATER CONDITION OF THE EXISTING SURROUNDING AS REQUIRED.
3. ALL DIMENSIONS TO FINISHED WALL SURFACE, EXCEPT WHERE OTHERWISE NOTED.

CP&Y, INC.
TBPE FIRM REGISTRATION NO. #F-1741

CITY OF AUSTIN BEST 1 PARTNERED

REGISTERED ARCHITECT DANIELL W. VICKERS 16062 STATE OF TEXAS
05-26-21

NO.	REVISION	BY	DATE

VERIFY SCALE 0 1" BAR IS ONE INCH ON ORIGINAL DRAWING. IF NOT ONE INCH ON THIS SHEET, ADJUST SCALE

CITY OF AUSTIN – AUSTIN WATER
HORNSBY BEND BMP CENTRIFUGES

ARCHITECTURAL
DRAFTING SYMBOLS &
DRAWING LEGEND

Date:	MAY 2021
Designed:	D. VICKERS
Drawn:	R. ALLEN
Reviewed:	D.VICKERS
CP&Y Proj.	AUST1600646.01

SHEET
A–1

REFERENCES: AUST1600646.01 Border Base.dwg _Std ENVIRO SEALS.dwg arch seals
Jun 02, 2021 – 9:30am C:\pwworking\cpy\pw_cpy\vallen\d0795251\AUST1600646.01_3_A-1_CPY.dwg

GENERAL NOTES

1. CONTRACTOR TO PROTECT INTERIOR OF THE BUILDING FROM EXPOSURE TO WEATHER ELEMENTS AT ROOF DRAIN OPENING AND OPENING OF NEW DOOR DURING CONSTRUCTION.

HAZARDOUS MATERIALS NOTES

1. PER THE COA'S ASBESTOS SURVEY REPORTS, THERE IS "NO ASBESTOS DETECTED" (NAD) IN THE AREAS OF THE BUILDING WHERE THE PROTECTED WORK WILL BE UPGRADED. NO ASBESTOS WAS DETECTED IN THE WINDOWS CAULK, CMU WALLS, PUMPS, ACCESSIBLE PUMPS GASKETS AND ALL ASSOCIATED PIPING AND INSULATION. NO FILL MATERIAL WAS DISCOVERED IN THE AREAS WHERE THE CMU WILL BE REPAIRED/REPLACED OR REMOVED.

2. PER THE COA'S LEAD BASE PAINT SURVEY REPORTS, THE LEAD BASE PAINT SAMPLES COLLECTED AND ANALYZED FROM THE PUMPING EQUIPMENT AND ASSOCIATED PIPES, THERMAL PIPE INSULATION; AND PAINTED METAL GAS LINES THAT RUNS ALONG THE INTERIOR WALLS NEAR THE CEILING ARE ALL BELOW THE US EPA HUD GUIDELINES FOR LEAD BASE PAINT. PROPER WORK PRACTICES AND PPE IS REQUIRED WHERE ANY CUTTING AND OR SAWING TAKES PLACE.

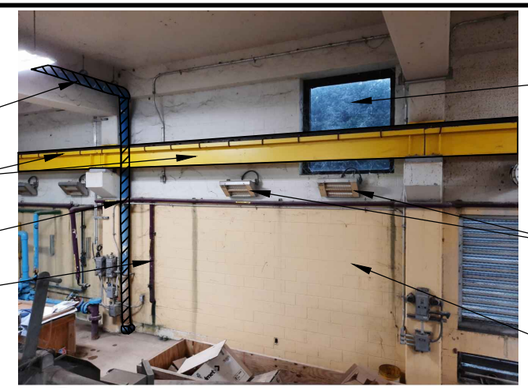

A PHOTO - EXISTING DRAIN AND LEADER

TRUE NORTH

NOTES BY SYMBOL (X)

1. DEMOLISH WINDOW
2. DEMOLISH WALL BETWEEN GRID LINES 9 AND 10
3. REMOVE ROOF DRAIN LEADER. CONTRACTOR TO PLUG OPENING IN ROOF DURING CONSTRUCTION OR ADD A TEMPORARY DRAIN LEADER UNTIL PERMANENT DRAIN LEADER CAN BE INSTALLED.
4. TAKE PRECAUTIONS TO PROTECT EXISTING BRIDGE CRANE.

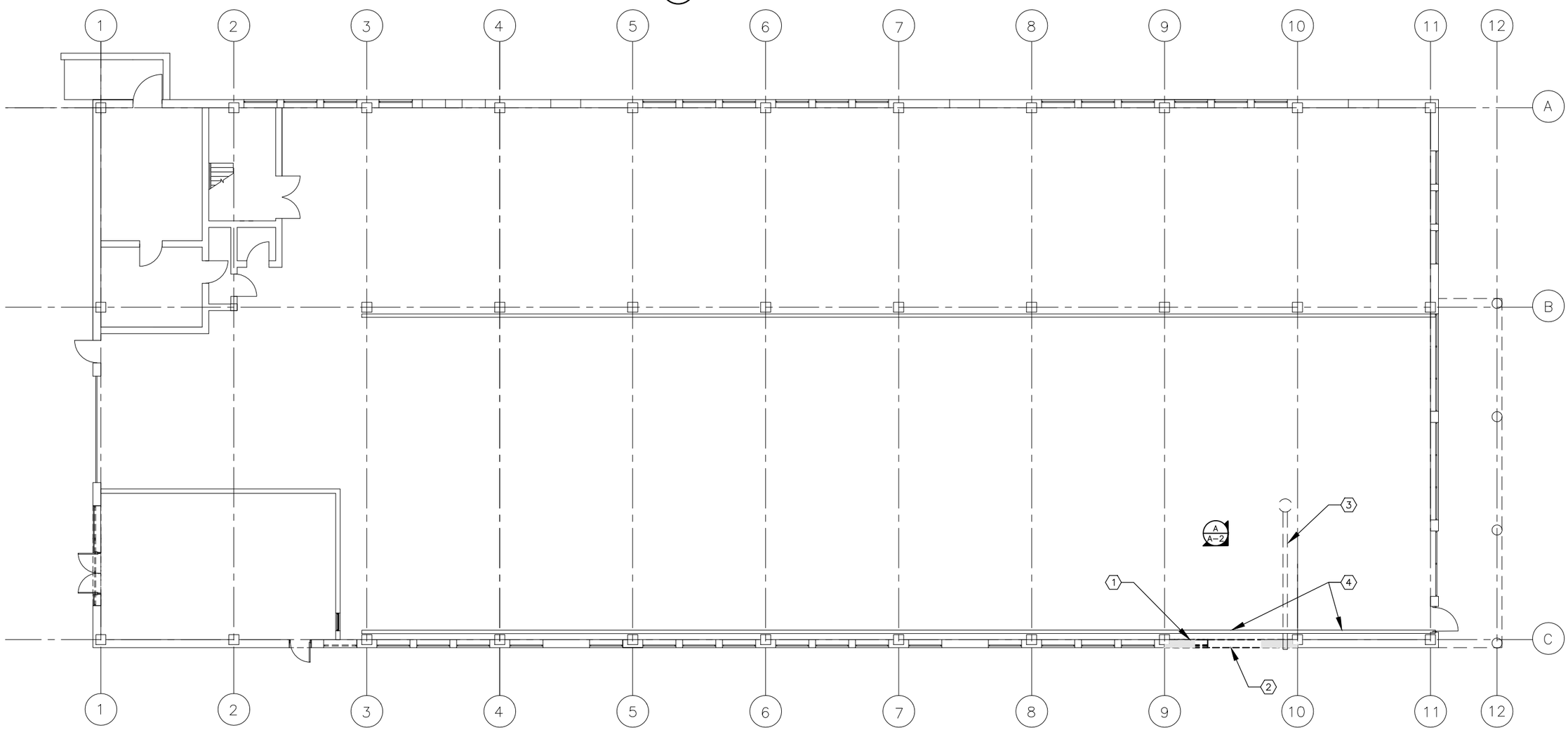

1 EXISTING AND DEMO PLAN

8 4 0 8
SCALE IN FEET

CP&Y, INC.
TBPE FIRM REGISTRATION NO. F-1741

CITY OF AUSTIN BEST MANAGED

REGISTERED ARCHITECT DARRELL W. VICKERS 16062 STATE OF TEXAS
05-26-21

NO.	REVISION	BY	DATE

VERIFY SCALE BAR IS ONE INCH ON ORIGINAL DRAWING. IF NOT ONE INCH ON THIS SHEET, ADJUST SCALE
0 1"

CITY OF AUSTIN – AUSTIN WATER
HORNSBY BEND BMP CENTRIFUGES
ARCHITECTURAL
EXISTING & DEMOLITION PLAN

Date: MAY 2021
Designed: D.VICKERS
Drawn: R.ALLEN
Reviewed: D.VICKERS
CP&Y Proj. AUST1600646.01

SHEET
A–2

REFERENCES: AUST1600646.01 Border Base.dwg _Std ENVIRO SEALS.dwg AUST1600646.01_E_ABase.dwg arch seals
Jun 02, 2021 – 9:30am C:\pwworking\cpy\gw_cpyVallen\d0795251\AUST1600646.01_3_A-2_CPY.dwg

GENERAL NOTES

1. CONTRACTOR IS RESPONSIBLE FOR COORDINATING WITH ALL TRADES AND CONDUCTING A SITE VISIT TO VERIFY EXISTING CONDITIONS. ANY REQUIRED WORK DUE TO FAILURE TO COORDINATE WITH ALL TRADES OR CONDUCT A SITE VISIT WILL BE THE RESPONSIBILITY OF THE CONTRACTOR AT NO ADDITIONAL COST TO THE OWNER.

2. ALL DIMENSIONS ARE TO TRUE FACE OF MASONRY UNLESS NOTED OTHERWISE.

3. THE CONTRACT DOCUMENTS CONSIST OF THE DRAWINGS AND SPECIFICATIONS. THE PLAN SET AND SPECIFICATION MANUAL SHALL NOT BE BROKEN INTO SECTIONS AND GIVEN TO SUB CONTRACTORS FOR THE INSTANCE OF BIDDING AND CONSTRUCTION.

4. FINISH FLOOR 100.00 = 441.00, RE: STRUCTURAL.

5. PAINT ALL EXTERIOR STUCCO TO MATCH WALLS ON EXISTING BUILDINGS– SHERWIN WILLIAMS 7719 FRESCO CREAM AND BEHR BOTANICAL GREEN FOR TRIM.

6. PAINT ALL NEW CMU WALLS & EXPOSED STEEL TO MATCH EXISTING WALL COLOR, TYP.

NOTES BY SYMBOL (X)

1. NEW WALL
2. PROPOSED ROLL DOOR. SEE DETAIL 4 ON A–5.
3. PROVIDE DOWNSPOUT & LEADER FROM ROOF DRAIN, TYP.
4. ROOF DRAIN TO REMAIN.
5. PROPOSED DRIVEWAY. RE: CIVIL FOR EXTENTS.

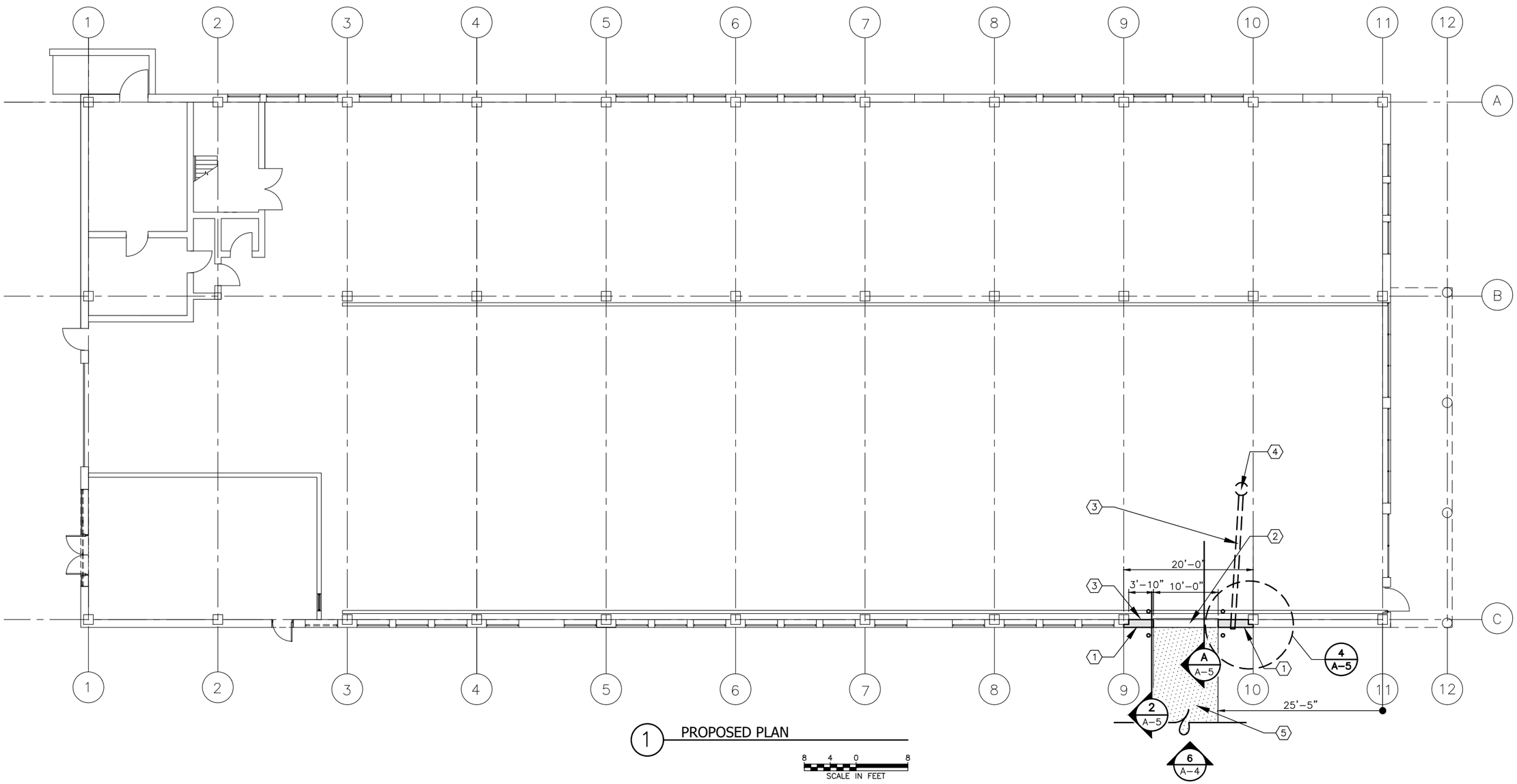

1 PROPOSED PLAN

8 4 0 8
SCALE IN FEET

CP&Y, INC.
TBPE FIRM REGISTRATION NO. F–1741

CITY OF AUSTIN – BEST PRACTICE PROMOTED

REGISTERED ARCHITECT RANDELL N. VICKERS 16062 STATE OF TEXAS
05–26–21

NO.	REVISION	BY	DATE

VERIFY SCALE 0 1"
BAR IS ONE INCH ON ORIGINAL DRAWING. IF NOT ONE INCH ON THIS SHEET, ADJUST SCALE

CITY OF AUSTIN – AUSTIN WATER
HORNSBY BEND BMP CENTRIFUGES
ARCHITECTURAL
PROPOSED
FLOOR PLAN

Date: MAY 2021
Designed: D.VICKERS
Drawn: R.ALLEN
Reviewed: D.VICKERS
CP&Y Proj. AUST1600646.01

SHEET
A–3

REFERENCES: AUST1600646.01 Border Base.dwg _Std ENVIRO SEALS.dwg AUST1600646.01_E_ABase.dwg arch seals
May 21, 2021 – 2:54pm C:\pwworking\cpy\pw_cpy\vallen\d0795251\AUST1600646.01_3_A–3_CPY.dwg

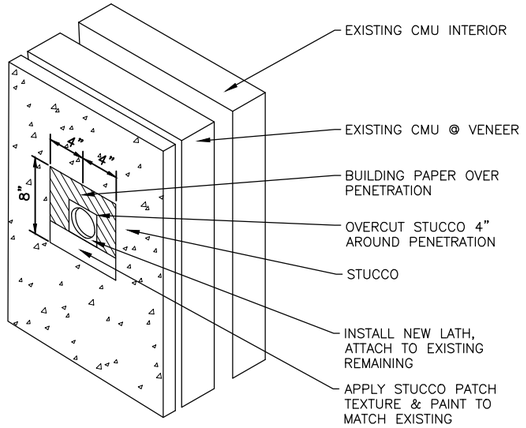

1 STUCCO PATCH OVER 2" DIA
NTS

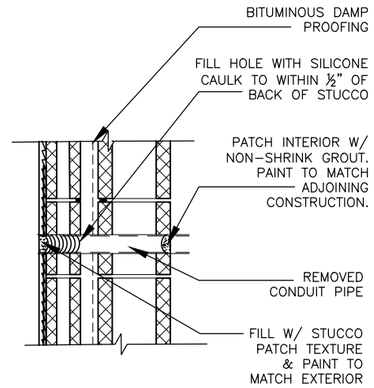

2 STUCCO PATCH UP TO 2" DIA
NTS

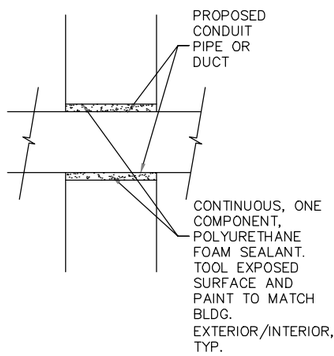

3 PIPE PENETRATION SECTION
NTS

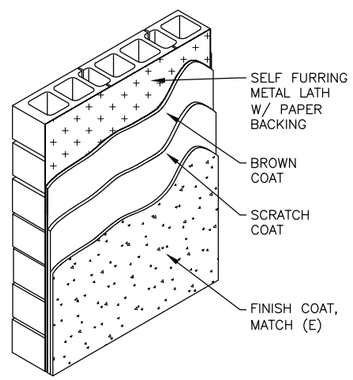

4 STUCCO DETAIL
NTS

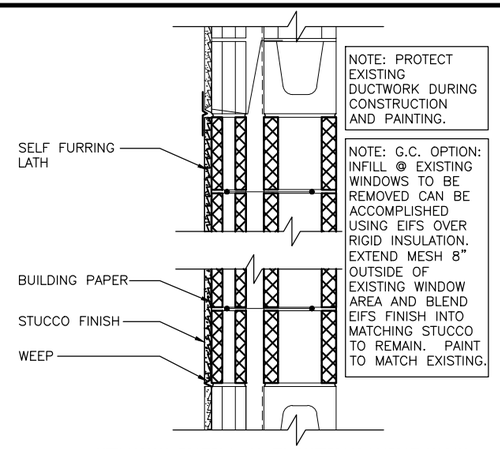

8 STUCCO INFILL @ EXISTING WINDOWS TO BE REMOVED
NTS

NOTE: ALL NECESSARY MOUNTING HARDWARE: NUTS, BOLTS, WASHERS, ETC., TO BE 316 STAINLESS STEEL.

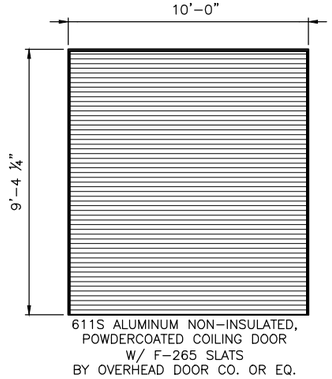

5 DOOR TYPE
NTS

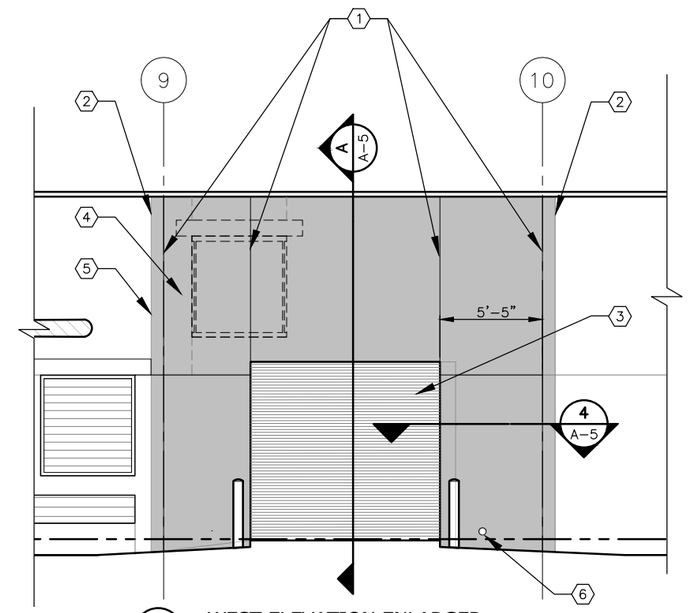

6 WEST ELEVATION ENLARGED
4 2 0 4
SCALE IN FEET

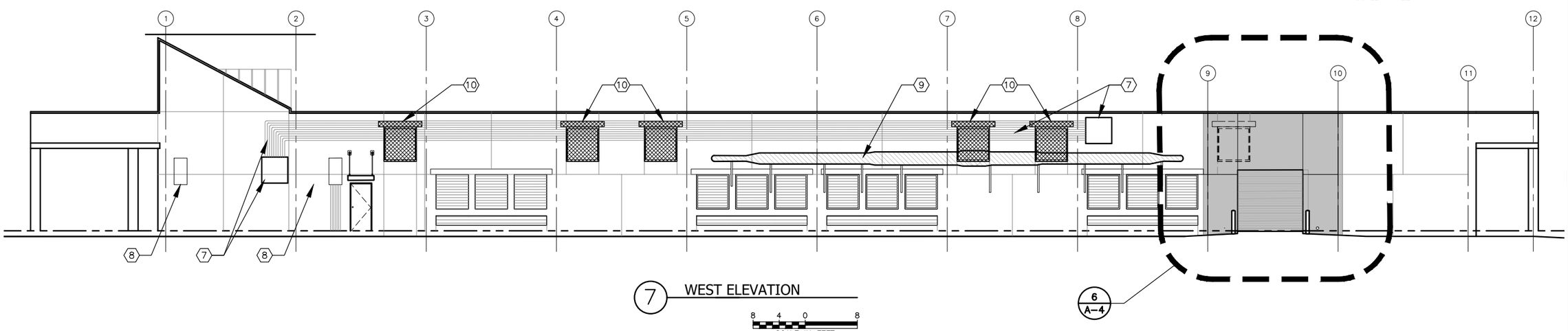

7 WEST ELEVATION
8 4 0 8
SCALE IN FEET

NOTES BY SYMBOL (X)

1. CONTROL JOINTS
2. EXTENTS OF NEW PLASTER
3. OVERHEAD DOOR
4. STUCCO FINISH TO MATCH EXISTING
5. REMOVE 8" BEYOND CONTROL JOINT, TYP.
6. DOWNSPOUT LEADER
7. COORDINATE FINAL LOCATION OF JUNCTION BOXES AND CONDUIT W/ ELECTRICAL. RE: 16110 FOR REQUIREMENTS TO SUPPORT RACEWAYS AND CONDUITS.
8. EXISTING JUNCTION BOXES: FIELD VERIFY EXACT LOCATION.
9. ODOR CONTROL PIPING STACK NOT SHOWN FOR CLARITY.
10. INFILL EXISTING WINDOWS. RE: DETAIL 8/A-4 FOR INFORMATION.

CP&Y, INC.
TBPE FIRM REGISTRATION NO. F-1741

CITY OF AUSTIN BEST FRIENDED

REGISTERED ARCHITECT DARRELL W. VICKERS 16062 STATE OF TEXAS
05-26-21

NO.	REVISION	BY	DATE

VERIFY SCALE BAR IS ONE INCH ON ORIGINAL DRAWING. IF NOT ONE INCH ON THIS SHEET, ADJUST SCALE
0 1"

CITY OF AUSTIN – AUSTIN WATER
HORNSBY BEND BMP CENTRIFUGES
ARCHITECTURAL ELEVATIONS & DETAILS

Date: MAY 2021
Designed: D.VICKERS
Drawn: R.ALLEN
Reviewed: D.VICKERS
CP&Y Proj: AUST1600646.01

SHEET
A-4

REFERENCES: AUST1600646.01 Border Base.dwg _Std ENVIRO SEALS.dwg AUST1600646.01_E_ABase.dwg arch seals
May 21, 2021 – 2:53pm C:\pwworking\cpy\pw_cpy\rallen\d0795251\AUST1600646.01_3_A-4_CPY.dwg

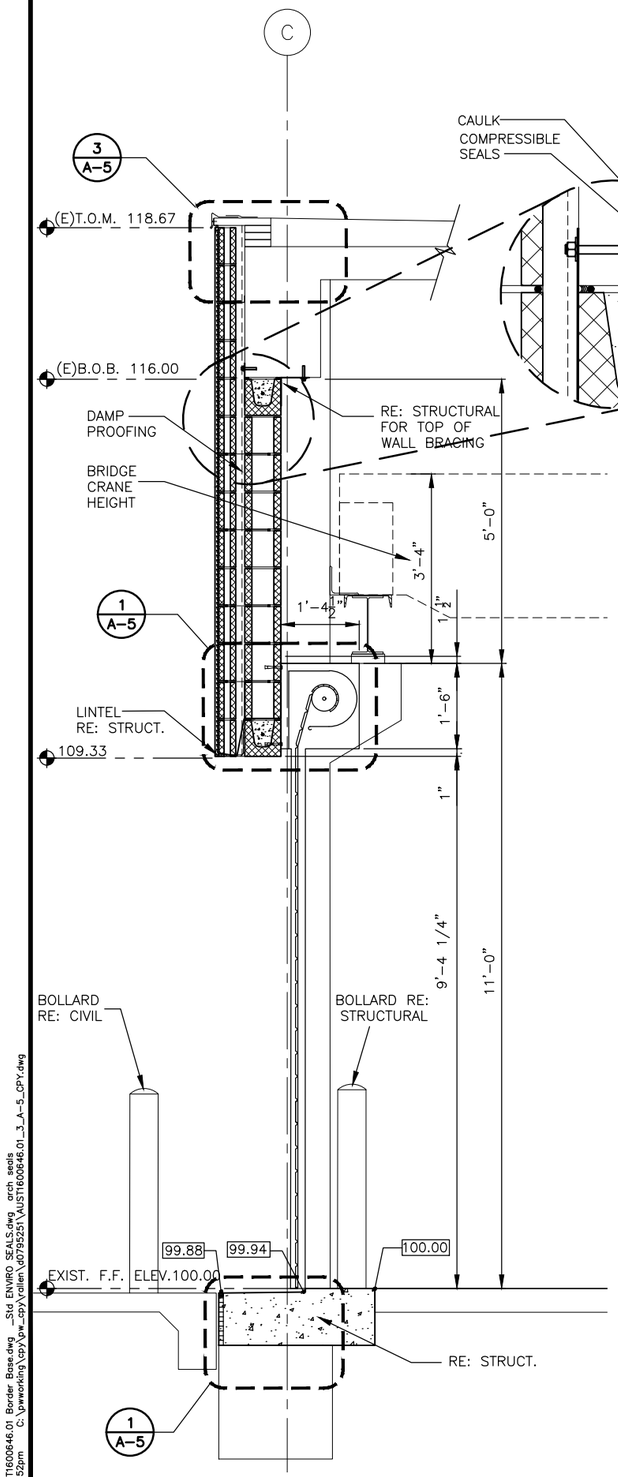

A PROPOSED SECTION

1 0 2
SCALE IN FEET

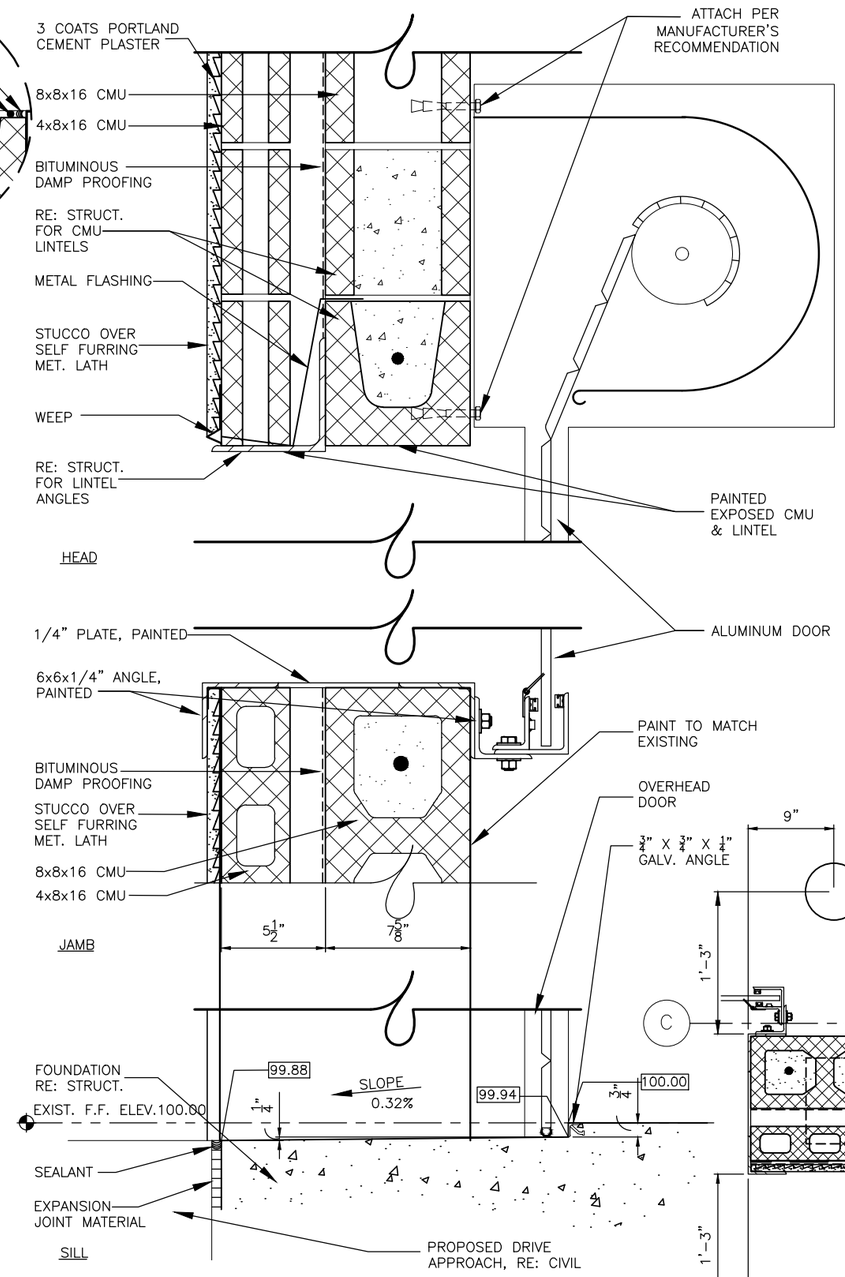

1 DOOR DETAIL

0 4" 8" 12"

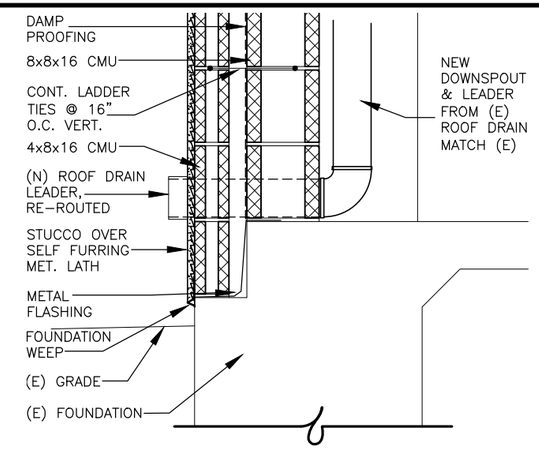

2 LEDGE DETAIL

1/2 0 1
SCALE IN FEET

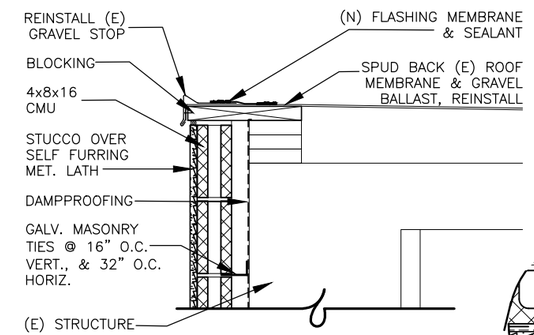

3 ROOF DETAIL

1/2 0 1
SCALE IN FEET

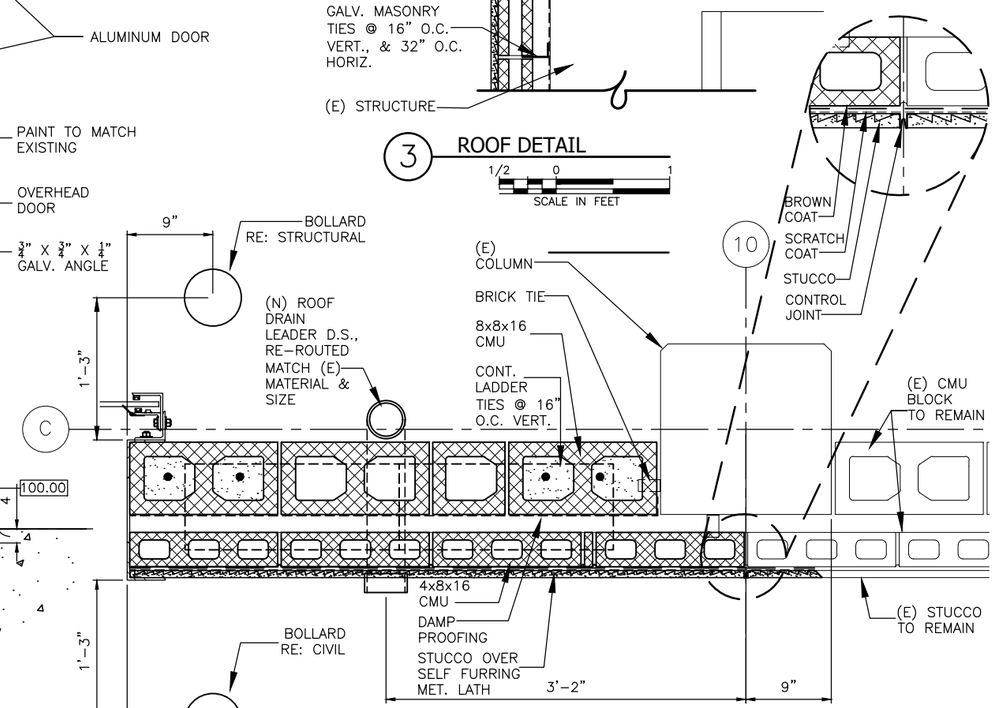

4 PLAN SECTION

1/2 0 1
SCALE IN FEET

REFERENCES: AUST1600646.01 Border Base.dwg _Std ENVIRO SEALS.dwg arch seals
May 21, 2021 – 2:52pm C:\pwworking\cpy\pw_cpy\rallen\d0795251\AUST1600646.01_3_A-5_CPY.dwg

CP&Y, INC.
TBPE FIRM REGISTRATION NO. F-1741

CITY OF AUSTIN BEST PLANNED

REGISTERED ARCHITECT RANDELL W. VICKERS 16062 STATE OF TEXAS

05-26-21

NO.	REVISION	BY	DATE

VERIFY SCALE 0 1" BAR IS ONE INCH ON ORIGINAL DRAWING. IF NOT ONE INCH ON THIS SHEET, ADJUST SCALE

CITY OF AUSTIN – AUSTIN WATER
HORNSBY BEND BMP CENTRIFUGES
ARCHITECTURAL SECTIONS & DETAILS

Date: MAY 2021
Designed: D.VICKERS
Drawn: R.ALLEN
Reviewed: D.VICKERS
CP&Y Proj. AUST1600646.01

SHEET
A-5

GENERAL NOTES FOR STRUCTURES

REINFORCED CONCRETE

1. REINFORCED CONCRETE REQUIREMENTS SHALL BE PER THE DRAWINGS AND SPECIFICATIONS.

2. MINIMUM DEVELOPMENT LENGTH FOR REINFORCING BARS IN TENSION AND COMPRESSION, FOR STANDARD HOOKS IN TENSION, AND MINIMUM LAP SPLICE LENGTH FOR REINFORCING BARS IN TENSION AND COMPRESSION SHALL BE AS GIVEN IN THE FOLLOWING TABLE FOR GR 60 REINFORCEMENT IN 4000 PSI CONCRETE.

BAR SIZE	DEVELOPMENT LENGTH (IN)				LAP SPLICE LENGTH (IN)		
	TOP BARS IN TENSION LD	OTHER BARS IN TENSION LD	BARS IN COMPRESSION LDC	STD HOOK IN TENSION LDH	TOP BARS IN TENSION LST	OTHER BARS IN TENSION LST	BARS IN COMPRESSION LSC
#3	18	14	8	7	24	18	12
#4	25	19	9	9	32	25	15
#5	31	24	12	12	40	31	19
#6	37	28	14	14	48	37	23
#7	54	42	17	17	70	54	26
#8	62	47	19	19	80	62	30
#9	70	54	21	21	90	70	34
#10	78	60	24	24	102	78	38
#11	87	67	27	27	113	87	42

a. TOP BARS ARE HORIZONTAL BARS SO PLACED THAT MORE THAN 12" OF CONCRETE IS CAST IN THE MEMBER BELOW THE BAR. HORIZONTAL BARS IN WALLS ARE TO BE PROVIDED WITH LAPS AS REQUIRED FOR TOP BARS.

b. EXCEPT AS OTHERWISE INDICATED ON THE PLANS, USE DEVELOPMENT LENGTH AND LAP SPLICE LENGTH FOR REINFORCING BARS IN TENSION.

c. MINIMUM DEVELOPMENT AND LAP SPLICE LENGTHS FOR BARS IN TENSION AS SHOWN IN THE ABOVE TABLE ARE BASED ON 2 BAR DIAMETER CLEAR SPACING (MIN) AND 1 BAR DIAMETER CLEAR CONCRETE (MIN).

d. MINIMUM DEVELOPMENT LENGTH FOR #11 OR SMALLER STANDARD HOOKS IN TENSION MAY BE MULTIPLIED BY 0.7 IF SIDE COVER IS LARGER THAN 2-1/2 IN AND FOR 90-DEGREE HOOK WITH COVER ON BAR EXTENSION BEYOND HOOK LARGER THAN 2 IN.

e. MINIMUM DEVELOPMENT LENGTH FOR BARS IN COMPRESSION MAY BE MULTIPLIED BY 0.75 IF CONFINEMENT CONDITIONS DEFINED IN ACI 318-14 TABLE 25.4.9.3 ARE MET.

3. UNLESS OTHERWISE SHOWN, THE MINIMUM CONCRETE CLEAR COVER FOR REINFORCING STEEL SHALL BE AS FOLLOWS:

CONCRETE EXPOSURE	COVER (IN)
CAST AGAINST AND PERMANENTLY IN CONTACT WITH GROUND	3
EXPOSED TO EARTH, LIQUID, WEATHER OR IN CONTACT WITH GROUND	2
NOT EXPOSED TO WEATHER OR IN CONTACT WITH GROUND	1-1/2

4. REINFORCING BAR SPACING INDICATED IN DRAWINGS SHALL BE MEASURED FROM BARS CENTER TO CENTER.

5. DESIGN DRAWINGS DO NOT SHOW ADDITIONAL REINF. BARS AT WALL CORNERS AND OPENINGS. CONTRACTOR SHALL REFER TO STRUCTURAL STANDARD SHEETS TO ADD ALL REQUIRED REINF. BARS IN THE SHOP DRAWINGS.

6. CONTRACTOR TO REPAIR, PATCH, ETC. ANY CONCRETE SURFACE AFTER DEMOLISHING WALL, WALKWAY, ETC. INCLUDING ALL HOLES DUE TO REMOVAL OF PIPES, UTILITIES, ETC PER SPECIFICATION AND STANDARD DETAIL.

7. CONTRACTOR TO REPAIR CRACKS, EXPANSION JOINTS, ETC PER SPECIFICATIONS AND STANDARD DETAILS.

STRUCTURAL STEEL

I. STRUCTURAL STEEL AND MISC METAL REQUIREMENTS SHALL BE PER THE DRAWINGS AND SPECIFICATIONS.

II. STRUCTURAL STEEL DETAILING, FABRICATION AND ERECTION SHALL CONFORM TO THE AISC MANUAL OF STEEL CONSTRUCTION.

MASONRY

I. MASONRY VENEER SHALL BE IN ACCORDANCE WITH THE ARCHITECTURAL DRAWINGS AND SPECIFICATIONS.

II. CONCRETE BLOCKS SHALL BE HOLLOW LOAD-BEARING CONCRETE MASONRY UNITS CONFORMING TO ASTM C90. USE BOND BEAMS AT HORIZONTAL REINFORCING. USE KNOCK-OUT LINTEL UNITS WHERE HORIZONTAL AND VERTICAL REINFORCEMENT CROSS.

III. MASONRY WALL ASSEMBLY SHALL BE CONSTRUCTED SUCH THAT PRISM STRENGTH OF F'M=1500 PSI IS DEVELOPED. MORTAR SHALL CONFORM TO ASTM C270, TYPE S.

IV. HORIZONTAL JOINT REINFORCING SHALL BE TRUSS TYPE 9 GA. WELDED WIRE @ 16 IN VERTICALLY. LAP HORIZONTAL JOINT REINFORCING 6" AT SPLICES.

V. GROUT WITH 3/8 INCH AGGREGATE WITH A 28 DAY COMPRESSIVE STRENGTH OF 3000 PSI SHALL BE USED FOR VERTICAL & HORIZONTAL REINFORCED SECTIONS. ALL CELLS SCHEDULED OR INDICATED AS BEING REINFORCED AND AS SHOWN ON MASONRY DETAILS SHALL BE FULLY GROUTED. 1/2 INCH MAXIMUM AGGREGATE SHALL BE USED FOR LINTELS AND BOND BEAMS.

VI. ALL REINFORCING SHALL BE ASTM A615 GRADE 60. PROVIDE MINIMUM 1/2 INCH CLEARANCE BETWEEN MAIN REINFORCING AND MASONRY UNITS. VERTICAL AND HORIZONTAL REINFORCING SHALL BE AS INDICATED ON THE DRAWINGS. REINFORCING BARS SHALL BE STRAIGHT EXCEPT FOR BENDS AROUND CORNERS AND WHERE DETAILED OTHERWISE ON THE DRAWINGS.

VII. MINIMUM DEVELOPMENT LENGTH AND LAP SPLICE LENGTH FOR REINFORCING BARS SHALL BE AS GIVEN IN THE FOLLOWING TABLE.

BAR SIZE	DEVELOPMENT LENGTH & LAP SPLICE (IN)			
	BARS CENTERED IN WALL (SINGLE REINFORCING)		BARS PLACED WITH COVER = 3" (DOUBLE REINFORCING)	
	8" CMU	12" CMU	8" CMU	12" CMU
#3	18	18	18	18
#4	24	24	24	24
#5	30	30	30	30
#6	37	36	49	49
#7	–	42	–	63

VIII. USE 'LOW LIFT' CONSTRUCTION, WITH A MAXIMUM GROUT POUR HEIGHT OF 4 FEET.

IX. CELLS SHALL BE IN VERTICAL ALIGNMENT. DOWELS IN FOUNDATIONS SHALL BE SET TO ALIGN WITH CORES CONTAINING REINFORCING STEEL. PROVIDE DOWELS EQUAL TO WALL REINFORCEMENT IN SIZE, QUANTITY AND SPACING AND HOOK INTO CONCRETE FOOTINGS WITH STANDARD HOOKS.

X. REFER TO BUILDING ELEVATION DRAWINGS FOR SURFACE AND HEIGHT OF MASONRY UNITS, LAYING PATTERN AND JOINT TYPE.

COORDINATION

I. PIPING AND MECHANICAL PENETRATIONS IN THE STRUCTURAL FRAMING COMPONENT MEMBERS ARE INDICATED ON THE STRUCTURAL DRAWINGS AT CRITICAL LOCATIONS. HOWEVER, ALL SLEEVES, INSERTS AND OPENINGS, INCLUDING FRAMES AND/OR SLEEVES SHALL BE PROVIDED FOR PASSAGE, PROVISION AND/OR INCORPORATION OF THE WORK OF THE CONTRACT, INCLUDING BUT NOT LIMITED TO ARCHITECTURAL, MECHANICAL, HVAC PIPING, ELECTRICAL AND PLUMBING WORK. THIS WORK SHALL INCLUDE THE COORDINATION OF SIZES, ALIGNMENT, DIMENSIONS, POSITION, LOCATIONS, ELEVATIONS AND GRADES AS REQUIRED TO SERVE THE INTENDED PURPOSE. OPENINGS NOT INDICATED ON THE STRUCTURAL DRAWINGS, BUT REQUIRED AS NOTED ABOVE, SHALL BE SUBMITTED TO THE ENGINEER FOR REVIEW. NOT ALL PENETRATIONS ARE SHOWN IN STRUCTURAL DRAWINGS. CONTRACTOR TO COORDINATE W/ALL OTHER DISCIPLINE DRAWINGS PRIOR TO FABRICATION OR PLACING CONCRETE.

II. FLOOR ELEVATIONS, SLOPES, DRAINS AND LOCATION OF DEPRESSED AND ELEVATED FLOOR AREAS SHALL BE COORDINATED WITH ALL DISCIPLINE DRAWINGS PRIOR TO CONSTRUCTION. NOTIFY THE ENGINEER IN THE EVENT OF A DISCREPANCY BETWEEN DISCIPLINES.

III. COMPATIBILITY OF THE STRUCTURE AND PROVISIONS FOR BUILDING EQUIPMENT SUPPORTED ON OR FROM STRUCTURAL COMPONENTS SHALL BE VERIFIED AS TO SIZE, DIMENSIONS, CLEARANCES, ACCESSIBILITY, WEIGHTS AND REACTION WITH THE EQUIPMENT FOR WHICH THE STRUCTURE HAS BEEN DESIGNED PRIOR TO SUBMISSION OF SHOP DRAWINGS AND DATA FOR EACH PIECE OF EQUIPMENT AND FOR STRUCTURAL COMPONENTS. DIFFERENCES SHALL BE NOTED ON THE SUBMITTALS.

IV. SHOP DRAWINGS SHALL BE PREPARED FOR ALL STRUCTURAL ITEMS AND SUBMITTED FOR REVIEW BY THE ENGINEER. CONTRACT DRAWINGS SHALL NOT BE REPRODUCED AND USED AS SHOP DRAWINGS. ALL ITEMS DEVIATING FROM THE CONTRACT DRAWINGS OR FROM PREVIOUSLY SUBMITTED SHOP DRAWINGS SHALL BE CLOUDED.

V. THE DETAILS DESIGNATED AS "TYPICAL DETAILS" OR "STANDARD DETAILS" APPLY GENERALLY TO THE DRAWINGS IN ALL AREAS WHERE CONDITIONS ARE SIMILAR TO THOSE DESCRIBED IN THE DETAILS.

VI. ALL RELEVANT DIMENSIONS AND CONDITIONS OF EXISTING CONSTRUCTION SHALL BE FIELD VERIFIED AT THE PROJECT SITE PRIOR TO FABRICATION OR CONSTRUCTION. DISCREPANCIES BETWEEN EXISTING CONSTRUCTION AND THE DRAWINGS SHALL BE REFERRED TO THE ENGINEER FOR RESOLUTION THROUGH A REQUEST FOR INFORMATION (RFI). DIFFERENCES SHALL ALSO BE CLOUDED ON THE SHOP DRAWINGS.

VII. THE DESIGN AND PROVISION OF ALL TEMPORARY SUPPORTS SUCH AS GUYS, BRACES, FALSEWORK, SUPPORTS AND ANCHORS FOR SAFETY LINES, RIBBING, OR ANY OTHER TEMPORARY ELEMENTS REQUIRED FOR THE EXECUTION OF THE CONTRACT ARE NOT INCLUDED IN THESE DRAWINGS AND SHALL BE THE RESPONSIBILITY OF THE CONTRACTOR. TEMPORARY SUPPORTS SHALL NOT RESULT IN THE OVERSTRESS OR DAMAGE OF THE ELEMENTS TO BE BRACED NOR ANY ELEMENTS USED AS BRACE SUPPORTS.

CODES

I. INTERNATIONAL BUILDING CODE IBC (2015).

II. MINIMUM DESIGN LOADS FOR BUILDING AND OTHER STRUCTURES (ASCE/SEI 7-10).

III. BUILDING CODE REQUIREMENTS FOR STRUCTURAL CONCRETE (ACI 318-14).

IV. CODE REQUIREMENTS OF ENVIRONMENTAL ENGINEERING CONCRETE STRUCTURES (ACI 350-06).

V. AISC MANUAL OF STEEL CONSTRUCTION (14TH EDITION).

VI. BUILDING CODE REQUIREMENTS FOR MASONRY STRUCTURES (TMS 402-13)

DESIGN LOADS

I. ACCESS FLOOR, WALKWAY LIVE LOAD: 125 PSF (UON)

II. RISK CATEGORY: III

III. GROUND SNOW LOAD: 5 PSF

VI. DESIGN WIND SPEED: 120 MPH (3 SEC GUST)
EXPOSURE CATEGORY: C

V. SEISMIC DESIGN CATEGORY: A
SEISMIC SITE CLASS: D
SEISMIC DESIGN PARAMETER Ss: 6.4%g
SEISMIC DESIGN PARAMETER S1: 3.3%g

CP&Y, INC.
TBPE FIRM REGISTRATION NO. F-1741

CITY OF AUSTIN EST. 1839 FOUNDED

STATE OF TEXAS
CHRIS POTTER
133757
LICENSED
PROFESSIONAL ENGINEER
05/19/21

NO.	REVISION	BY	DATE

VERIFY SCALE 0 1"
BAR IS ONE INCH ON ORIGINAL DRAWING. IF NOT ONE INCH ON THIS SHEET, ADJUST SCALE

CITY OF AUSTIN – AUSTIN WATER
HORNSBY BEND BMP CENTRIFUGES

STRUCTURAL NOTES, ABBREVIATIONS, SYMBOLS, & LEGEND (1 OF 2)

Date: MAY 2021
Designed: C.POTTER
Drawn: P.VILLARREAL
Reviewed: J.WOUTERS
CP&Y Proj: AUST1600646.01

SHEET
S-1

REFERENCES: _CPY_Standard_Border_Base.dwg _Std ENVIRO SEALS
May 20, 2021 – 8:52am C:\pwworking\cpy\pw_cpy\cpotter\d0795251\AUST1600646.01_4_S-1_CPY.dwg

STRUCTURAL ABBREVIATIONS

AFF	ABOVE FINISH FLOOR
ADDN'L	ADDITIONAL
AB	ANCHOR BOLT
APPROX	APPROXIMATE
ARCH	ARCHITECT
ARCH	ARCHITECTURAL
A/C	AIR CONDITIONER
AHU	AIR HANDLING UNIT
BSMT	BASEMENT
BM	BEAM
BRG	BEARING
BFF	BELOW FINISH FLOOR
BTWN	BETWEEN
BLK	BLOCK
BLKG	BLOCKING
BOT	BOTTOM
BLDG	BUILDING
BL	BUILDING LINE
CIP	CAST–IN–PLACE
CLG	CEILING
CL OR ℄	CENTER LINE
CLR	CLEAR
COL	COLUMN
C OR COMP	COMPRESSION
CONC	CONCRETE
CMU	CONCRETE MASONRY UNIT
CONN(S)	CONNECTION (S)
CONT	CONTINUOUS
CJ	CONSTRUCTION JOINT
DET	DETAIL
DL	DEAD LOAD
DEMO	DEMOLITION
DIAG	DIAGONAL
DIA OR ø	DIAMETER
DIM(S)	DIMENSION(S)
DWG(S)	DRAWING(S)
DBL	DOUBLE
DWL(S)	DOWEL(S)
EA	EACH
EF	EACH FACE
ES	EACH SIDE
EW	EACH WAY
ELEC	ELECTRICAL
EL	ELEVATION
EMBED	EMBEDMENT
EQ	EQUAL
EJ	EXPANSION JOINT
EXIST OR EX	EXISTING
F TO F	FACE TO FACE
FS	FAR SIDE
FF	FINISHED FLOOR
FLG	FLANGE
FL OR ℄	FLOOR OR FLOW LEVEL
FD	FLOOR DRAIN
FTG	FOOTING
FDN	FOUNDATION
GA	GAGE OR GAUGE
GALV	GALVANIZED
GC	GENERAL CONTRACTOR
GR BM	GRADE BEAM
HS	HEADED STUDS
HT	HEIGHT
HP	HIGH POINT
HSS	HOLLOW STRUCTURAL SECTION
HORIZ	HORIZONTAL
INFO	INFORMATION
ID	INSIDE DIAMETER
IF	INSIDE FACE
INT	INTERIOR
INTERM	INTERMEDIATE
JT	JOINT
JST(S)	JOIST(S)
K	KIPS (1000 LBS)
KLF	KIP PER LINEAR FOOT
KSF	KIP PER SQUARE FOOT
LL	LIVE LOAD
LG	LONG
LONG	LONGITUDINAL
LLH	LONG LEG HORIZONTAL
LLV	LONG LEG VERTICAL
LP	LOW POINT
MFR	MANUFACTURER
MAX	MAXIMUM
MECH	MECHANICAL
MEZZ	MEZZANINE
MIN	MINIMUM
MISC	MISCELLANEOUS
MC	MOMENT CONNECTION
NS	NEAR SIDE
NOM	NOMINAL
NIC	NOT IN CONTRACT
NTS	NOT TO SCALE
NO OR #	NUMBER
OC	ON CENTER
OPNG(S)	OPENING(S)
OPP	OPPOSITE
OH	OPPOSITE HAND
OF	OUTSIDE FACE
OD	OUTSIDE DIAMETER
PERP	PERPENDICULAR
PC	PIECE
PL OR ℙ	PLATE
P–T	POST–TENSION(ED)(ING)
PSF	POUNDS PER SQUARE FOOT
PSI	POUNDS PER SQUARE INCH
P/C	PRECAST CONCRETE
R	RADIUS
RCP	REINFORCED CONCRETE PIPE
REINF	REINFORCE(ING) (ED) (MENT)
REQ'D	REQUIRED
RD	ROOF DRAIN
SCHED	SCHEDULE(D)
SECT	SECTION
SHT(S)	SHEET(S)
SIM	SIMILAR
SP	SPACE
SPEC(S)	SPECIFICATION(S)
SF	SQUARE FOOT (FEET)
SS	STAINLESS STEEL
STD	STANDARD
STL	STEEL
STIFF	STIFFENER
STR	STRAIGHT
STIR	STIRRUPS
STRUCT'L	STRUCTURAL
SYM	SYMMETRICAL
THK	THICK
T&G	TONGUE AND GROOVE
T&B	TOP AND BOTTOM
TOB	TOP OF BEAM
TOF	TOP OF FOOTING
TOJ	TOP OF JOIST
TOP	TOP OF PIER
TOPC	TOP OF PIER CAP
TOS	TOP OF STEEL
TOSC	TOP OF STRUCTURAL CONCRETE
TOW	TOP OF WALL
TYP	TYPICAL
UON	UNLESS OTHERWISE NOTED
VERT	VERTICAL
WWF	WELDED WIRE FABRIC
W/	WITH
W/O	WITHOUT
WP	WORK POINT

SPECIAL INSPECTIONS - IBC 2015

VERIFICATION OF SOILS

SPECIAL INSPECTION REQUIRED	INSPECTION TASK (STANDARD & CODE REFERENCE)	CONTINUOUS INSPECTION	PERIODIC INSPECTION	SPECIAL INSPECTIONS FIRM	NOTES & SCOPE
X	VERIFY MATERIALS BELOW FOOTINGS ARE ADEQUATE TO ACHIEVE THE DESIGN BEARING CAPACITY		X	TESTING LAB	
X	VERIFY EXCAVATIONS ARE EXTENDED TO PROPER DEPTHS AND HAVE REACHED PROPER MATERIAL		X	TESTING LAB	
X	PERFORM CLASSIFICATION AND TESTING OF CONTROLLED FILL MATERIALS		X	TESTING LAB	
X	VERIFY USE OF PROPER MATERIALS, DENSITIES AND LIFT THICKNESSES DURING PLACEMENT AND COMPACTION OF CONTROLLED FILL	X		TESTING LAB	
X	PRIOR TO PLACEMENT OF CONTROLLED FILL, OBSERVE SUBGRADE AND VERIFY THAT SITE HAS BEEN PREPARED PROPERLY		X	TESTING LAB	

EXCAVATION AND FILLING

SPECIAL INSPECTION REQUIRED	INSPECTION TASK (STANDARD & CODE REFERENCE)	CONTINUOUS INSPECTION	PERIODIC INSPECTION	SPECIAL INSPECTIONS FIRM	NOTES & SCOPE
X	EXCAVATION AND FILLING, IBC SECTION 1704.7 AND 3304		X	TESTING LAB	

PILING AND DRILLED PIERS

SPECIAL INSPECTION REQUIRED	INSPECTION TASK (STANDARD & CODE REFERENCE)	CONTINUOUS INSPECTION	PERIODIC INSPECTION	SPECIAL (INSPECTIONS FIRM)	NOTES & SCOPE
	PILING AND DRILLED PIERS, IBC SECTION 1704.8-9, 1802.2 AND 1807.11		X	TESTING LAB	
	OBSERVE DRILLING OPERATIONS AND MAINTAIN COMPLETE ACCURATE RECORDS FOR EACH PIER	X		TESTING LAB	
	VERIFY PLACEMENT LOCATIONS AND PLUMBNESS, CONFIRM PIER DIAMETERS, BELL DIAMETERS (IF APPLICABLE), LENGTHS, EMBEDMENT INTO BEDROCK, (IF APPLICABLE) AND ADEQUATE END BEARING STRATA CAPACITY		X	TESTING LAB	
	FOR CONCRETE PIERS, PERFORM ADDITIONAL INSPECTIONS IN ACCORDANCE WITH IBC SECTION 1704.4		X	TESTING LAB	
	FOR MASONRY PIERS, PERFORM ADDITIONAL INSPECTIONS IN ACCORDANCE WITH IBC SECTION 1704.5				

REINFORCED CONCRETE

SPECIAL INSPECTION REQUIRED	INSPECTION TASK (STANDARD & CODE REFERENCE)	CONTINUOUS INSPECTION	PERIODIC INSPECTION	SPECIAL INSPECTIONS FIRM	NOTES & SCOPE
X	INSPECTION OF REINFORCING STEEL, INCLUDING PRETESTING TENDONS, AND PLACEMENTS, ACI 318: 3.5, 7.1-7.7, IBC SECTION 1913.4		X	TESTING LAB	
	INSPECTION OF REINFORCING STEEL WELDING IN ACCORDANCE WITH IBC TABLE 1704.3, ITEM 5B, AWS:D1.4, ACI318:3.5.2.			TESTING LAB	
X	INSPECT BOLTS TO BE INSTALLED IN CONCRETE PRIOR TO ND DURING PLACEMENT OF CONCRETE WHERE ALLOWABLE LOADS HAVE BEEN INCREASED. IBC SECTION 1911.5		X		
X	VERIFYING USE OF REQUIRED DESIGN MIX ACI 318: CH4, 5.2-5.4, 1904.2.2, IBC SECTION 1913.2, 1913.3		X	TESTING LAB	
X	AT THE TIME FRESH CONCRETE IS SAMPLED FABRICATE SPECIMENS FOR STRENGTH TESTS, PERFORM SLUMP AND AIR CONTENT TEST, AND DETERMINE THE TEMPERATURE OF THE CONCRETE. ASTMC 172, ASTMC 21, ACI318:5.6,5.8. IBC SECTION 1913.10	X		TESTING LAB	
X	INSPECTION FOR MAINTENANCE OF SPECIFIED CURING TEMPERATURE AND TECHNIQUES. ACI 318:5.11-5.13, IBC SECTION 1913.9		X	TESTING LAB	
X	ERECTION OF PRECAST CONCRETE MEMBERS. ACI 318: CH. 16		X	TESTING LAB	
X	INSPECTION OF FORMWORK FOR SHAPE, LOCATION AND DIMENSIONS OF THE CONCRETE MEMBER BEING FORMED ACI 318: 6.1.1		X	TESTING LAB	

INSPECTION OF STRUCTURAL STEEL FABRICATORS

SPECIAL INSPECTION REQUIRED	INSPECTION TASK (STANDARD & CODE REFERENCE)	CONTINUOUS INSPECTION	PERIODIC INSPECTION	SPECIAL INSPECTIONS FIRM	NOTES & SCOPE
	WELDING INSPECTIONS SHALL BE IN COMPLIANCE WITH AWSD1.1. THE BASE FOR WELDING FOR QUALIFICATIONS SHALL BE AWSD1.1. (IBC)	X		TESTING LAB	FIELD WELDING

STRUCTURAL MASONRY

SPECIAL INSPECTION REQUIRED	INSPECTION TASK (STANDARD & CODE REFERENCE)	CONTINUOUS INSPECTION	PERIODIC INSPECTION	SPECIAL INSPECTIONS FIRM	NOTES & SCOPE
X	AS MASONRY CONSTRUCTION BEGINS, THE FOLLOWING SHALL BE VERIFIED TO ENSURE COMPLAINCE: (A) PROPORTIONS OF SITE PREPARED MORTAR. (B) CONSTRUCTION OF MORTAR JOINTS. (C) LOCATION OF REINFORCEMENTS AND CONNECTORS. ART 2.6A, ART 3.38, ART3.4		X	TESTING LAB	

STRUCTURAL MASONRY (CONTINUED)

X	THE INSPECTION PROGRAM SHALL VERIFY: (A) SIZE AND LOCATION OF STRUCTURAL ELEMENTS. (B) TYPE, SIZE AND LOCATION OF ANCHORS, INCLUDING OTHER DETAILS OF ANCHORAGE OF MASONRY TO STRUCTURAL MEMBERS, FRAMES OR OTHER CONSTRUCTION. (C) SPECIFIED SIZE, GRADE AND TYPE OF REINFORCEMENT (D) WELDING OF REINFORCING BARS. (E) PROTECTION OF MASONRY DURING WEATHER (TEMPERATURE BELOW 40 DEGREES F) OR HOT WEATHER (TEMPERATURE ABOVE 90 DEGREES F) SEC 2108.9.2.11, ITEM 2. SEC 2104.3, 2104, ACI 318: SEC 1.15.4.2.1.2, SEC 1.12, SEC 2.1.8.6, 2.1.8.6.2, ACI 3.3G, ART 2.4, 3.4, ART 1.8	X	X	TESTING LAB	CONTINUOUS FOR WELDING OF REINFORCING
X	PRIOR TO GROUTING THE FOLLOWING SHALL BE VERIFIED TO ENSURE COMPLIANCE: (A) GROUT SPACE IS CLEAN. (B) PLACEMENT OF REINFORCEMENT AND CONNECTORS. (C) PROPORTIONS OF SITE-PREPARED GROUT. (D) CONSTRUCTION OF MORTAR JOINTS. SEC 1.12 ART 3.2D, ART 3.4, ART 2.6B, ART 3.3B		X	TESTING LAB	
X	GROUT PLACEMENT SHALL BE VERIFIED TO ENSURE COMPLAINCE WITH CODE AND CONSTRUCTION PROVISIONS ART 3.5	X		TESTING LAB	
X	PREPARATION OF ANY REQUIRED GROUP SPECIMENS, MORTAR SPECIMENS AND /OR PRISMS SHALL BE OBSERVED SEC 2105.3, 2105.4, 2105.5 ART 1-4		X	TESTING LAB	
X	COMPLAINCE WITH REQUIRED INSPECTION PROVISIONS OF THE CONSTRUCTION DOCUMENTS AND THE APPROVED SUBMITTALS SHALL BE VERIFIED. ART 1.5		X	TESTING LAB	

SPECIAL INSPECTIONS

CP&Y, INC.
TBPE FIRM REGISTRATION NO. F-1741

CITY OF AUSTIN ESTD 1839 FOUNDED

STATE OF TEXAS
CHRIS POTTER
133757
LICENSED
PROFESSIONAL ENGINEER
05/20/21

NO.	REVISION	BY	DATE

VERIFY SCALE 0 1"
BAR IS ONE INCH ON ORIGINAL DRAWING. IF NOT ONE INCH ON THIS SHEET, ADJUST SCALE

CITY OF AUSTIN – AUSTIN WATER
HORNSBY BEND BMP CENTRIFUGES

STRUCTURAL NOTES, ABBREVIATIONS SYMBOLS, & LEGEND (2 OF 2)

Date: MAY 2021
Designed: C.POTTER
Drawn: P.VILLARREAL
Reviewed: J.WOUTERS
CP&Y Proj: AUST1600646.01

SHEET
S–2

REFERENCES: _CPY_Standard_Border_Base.dwg _Std ENVIRO SEALS
May 20, 2021 – 9:36am C:\pwworking\cpy\pw_cpy\cpotter\d0795251\AUST1600646.01_4_S-2_CPY.dwg

HAZARDOUS MATERIALS NOTES:

1. PER THE COA'S ASBESTOS SURVEY REPORTS, THERE IS "NO ASBESTOS DETECTED" (NAD) IN THE AREAS OF THE BUILDING WHERE THE PROJECTED WORK WILL BE UPGRADED. NO ASBESTOS WAS DETECTED IN THE WINDOWS CAULK, CMU WALLS, PUMPS, ACCESSIBLE PUMPS GASKETS AND ALL ASSOCIATED PIPING AND INSULATION. NO FILL MATERIAL WAS DISCOVERED IN THE AREAS WHERE THE CMU WILL BE REPAIRED/REPLACED OR REMOVED.

2. PER THE COA'S LEAD BASE PAINT SURVEY REPORTS, THE LEAD BASE PAINT SAMPLES COLLECTED AND ANALYZED FROM THE PUMPING EQUIPMENT AND ASSOCIATED PIPES, THERMAL PIPE INSULATION; AND PAINTED METAL GAS LINES THAT RUNS ALONG THE INTERIOR WALLS NEAR THE CEILING ARE ALL BELOW THE US EPA HUD GUIDELINES FOR LEAD BASE PAINT. PROPER WORK PRACTICES AND PPE IS REQUIRED WHERE ANY CUTTING AND OR SAWING TAKES PLACE.

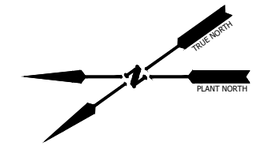

NOTES BY SYMBOL (X)

1. DEMO EXISTING TRENCH, GRATE AND GBT FOUNDATIONS.
2. DEMO EXISTING SLAB AND SUBGRADE. COORDINATE WITH PROPOSED DRAWINGS. REFER TO MECH'L FOR DEMOLITION OF EXISTING PIPING/EQUIPMENT.
3. DEMO EXISTING MASONRY, SEE ARCHITECTURAL DRAWINGS FOR EXTENTS AND DETAILS.
4. DEMO EXISTING WINDOW, SEE ARCHITECTURAL DRAWINGS AND S-4 FOR MORE INFORMATION.
5. DEMO SOUTH WALL OF EXISTING CENTRIFUGE TRENCH. SEE PHOTO 1 SHEET S-4.
6. DEMO ALUM GRATING.

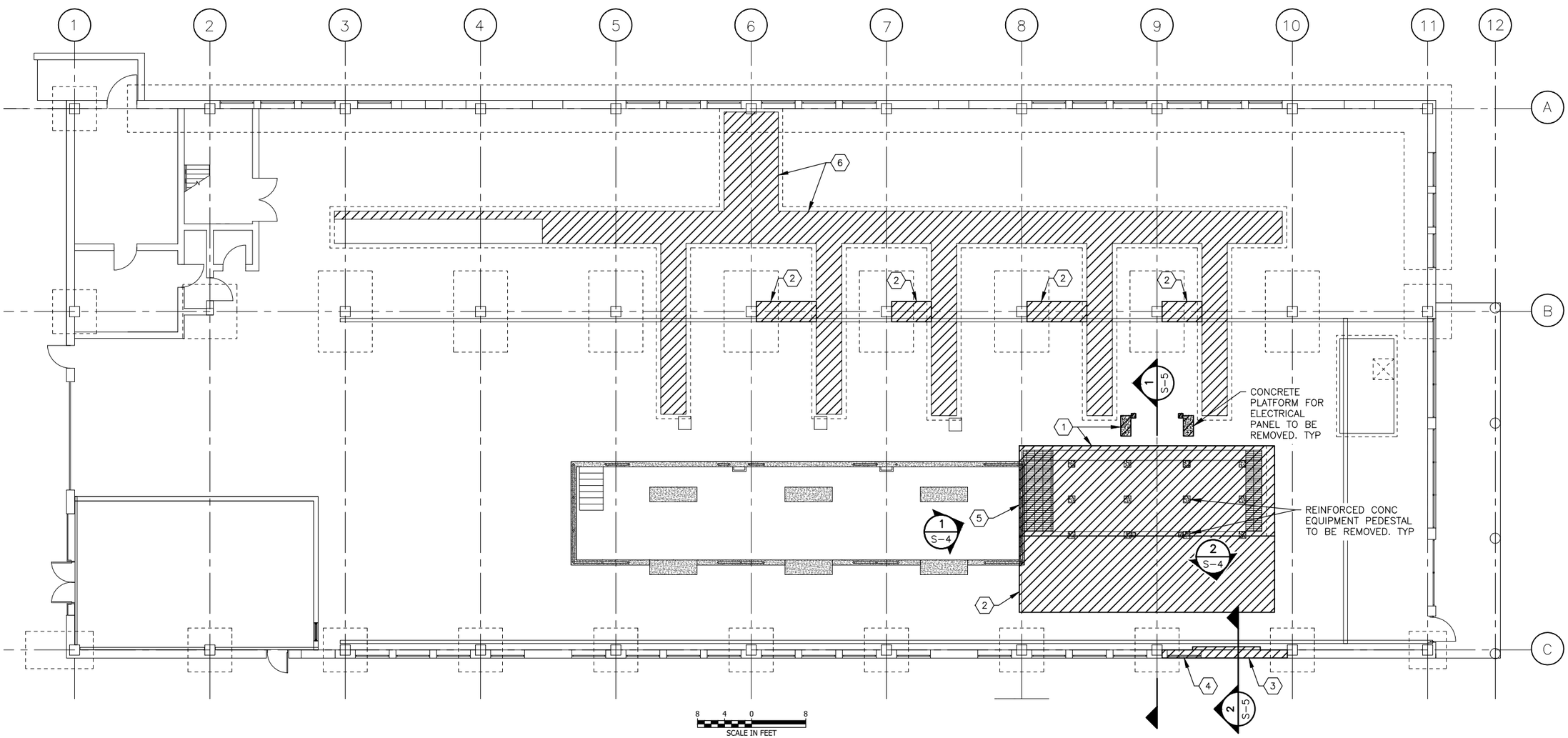

GENERAL NOTES:

1. CONTRACTOR SHALL COORDINATE ALL ITEMS TO BE SALVAGED AND RETURNED TO OWNER PRIOR TO DEMOLITION. EXISTING GBT ACCESS STAIRS AND HANDRAILS TO BE SALVAGED AND RETURNED TO OWNER.
2. CONTRACTOR SHALL FIELD VERIFY ALL DIMENSIONS AND EXISTING CONDITIONS PRIOR TO CONSTRUCTION OR ORDERING MATERIALS.
3. SEE ARCHITECTURAL, HVAC, MECHANICAL AND ELECTRICAL SHEETS FOR INFORMATION NOT SHOWN.
4. ALL CONCRETE DEMOLITION SHALL BE PER SPECIAL SPECIFICATION 03740.

LEGEND

ITEMS TO BE DEMOLISHED

CP&Y, INC.
TBPE FIRM REGISTRATION NO. F-1741

CITY OF AUSTIN ESTD 1839 FOUNDED

STATE OF TEXAS
CHRIS POTTER
13757
LICENSED
PROFESSIONAL ENGINEER
06/18/21

NO.	REVISION	BY	DATE

VERIFY SCALE 0 1" BAR IS ONE INCH ON ORIGINAL DRAWING. IF NOT ONE INCH ON THIS SHEET, ADJUST SCALE

CITY OF AUSTIN – AUSTIN WATER
HORNSBY BEND BMP CENTRIFUGES

STRUCTURAL DEMOLITION PLAN I

Date:	MAY 2021
Designed:	C.POTTER
Drawn:	P.VILLARREAL
Reviewed:	J.WOUTERS
CP&Y Proj:	AUST1600646.01

SHEET
S-3

REFERENCES: _CPY_Standard_Border_Base.dwg _Std ENVIRO SEALS.dwg AUST1600646.01_E_SBase.dwg AUST1600646.01_E_ABase.dwg AUST1600646.01_Border_Base.dwg AUST1600646.01_P_SBase.dwg AUST1600646.01_E_MBase
Jun 02, 2021 – 7:57am C:\pwworking\cpy\pw_cpy\cpotter\d0795251\AUST1600646.01_4_S-3_& S-4_CPY.dwg

HAZARDOUS MATERIALS NOTES:

1. PER THE COA'S ASBESTOS SURVEY REPORTS, THERE IS "NO ASBESTOS DETECTED" (NAD) IN THE AREAS OF THE BUILDING WHERE THE PROJECTED WORK WILL BE UPGRADED. NO ASBESTOS WAS DETECTED IN THE WINDOWS CAULK, CMU WALLS, PUMPS, ACCESSIBLE PUMPS GASKETS AND ALL ASSOCIATED PIPING AND INSULATION. NO FILL MATERIAL WAS DISCOVERED IN THE AREAS WHERE THE CMU WILL BE REPAIRED/REPLACED OR REMOVED.

2. PER THE COA'S LEAD BASE PAINT SURVEY REPORTS, THE LEAD BASE PAINT SAMPLES COLLECTED AND ANALYZED FROM THE PUMPING EQUIPMENT AND ASSOCIATED PIPES, THERMAL PIPE INSULATION; AND PAINTED METAL GAS LINES THAT RUNS ALONG THE INTERIOR WALLS NEAR THE CEILING ARE ALL BELOW THE US EPA HUD GUIDELINES FOR LEAD BASE PAINT. PROPER WORK PRACTICES AND PPE IS REQUIRED WHERE ANY CUTTING AND OR SAWING TAKES PLACE.

NOTES BY SYMBOL (X)

1. REMOVE "REMOVABLE GUARDRAILS" AT SOUTH END WALL OF EXISTING CENTRIFUGE TENCH. STORE GUARDRAILS FOR USE ON EXTENDED CENTRIFUGE TRENCH. ONCE GUARDRAIL HAS BEEN REMOVED, THEN DEMOLISH SOUTH WALL OF EXISTING CENTRIFUGE TRENCH.

2. DEMOLISH EXISTING CMU AND WINDOW BETWEEN COLUMN LINES 9 AND 10. REFER TO OTHER DISCIPLINES FOR DEMOLITION OF MECHANICAL AND ELECTRICAL EQUIPMENT SHOWN. CONTRACTOR SHALL PROTECT BRIDGE CRANE RAIL DURING DEMOLITION.

NOTE:

1. THE CONTRACTOR SHALL BE RESPONSIBLE FOR TEMPORARY CONTAINMENT OF THE EXISTING CENTRIFUGE TRENCH TO REMAIN FROM THE TIME OF SOUTH END WALL DEMOLITION TO THE COMPLETION OF THE NEW CENTRIFUGE TRENCH. THE CONTRACTOR SHALL SUBMIT TEMPORARY CONTAINMENT PLANS TO THE OWNER AND ENGINEER FOR REVIEW PRIOR TO CONSTRUCTION OR ORDERING MATERIALS.

1 SOUTH END WALL OF EXISTING CENTRIFUGE TRENCH

2 CMU BETWEEN COLUMN LINES 9 AND 10

CP&Y, INC.
TBPE FIRM REGISTRATION NO. F-1741

CITY OF AUSTIN EST. 1839 FOUNDED

STATE OF TEXAS
CHRIS POTTER
13757
LICENSED
PROFESSIONAL ENGINEER
05/19/21

NO.	REVISION	BY	DATE

VERIFY SCALE 0 1"
BAR IS ONE INCH ON ORIGINAL DRAWING. IF NOT ONE INCH ON THIS SHEET, ADJUST SCALE

CITY OF AUSTIN – AUSTIN WATER
HORNSBY BEND BMP CENTRIFUGES

STRUCTURAL DEMOLITION PLAN II

Date: MAY 2021
Designed: C.POTTER
Drawn: S.MEDINA
Reviewed: J.WOUTERS
CP&Y Proj. AUST1600646.01

SHEET
S–4

REFERENCES: _CPY_Standard_Border_Base.dwg _Std ENVIRO SEALS.dwg AUST1600646.01_E_SBase.dwg AUST1600646.01_E_ABase.dwg AUST1600646.01_Border_Base.dwg AUST1600646.01_P_SBase.dwg AUST1600646.01_E_MBase
Jun 02, 2021 – 8:01am C:\pwworking\cpy\pw_cpy\cpotter\d0795251\AUST1600646.01_4_S-3_& S-4_CPY.dwg

HAZARDOUS MATERIALS NOTES:

1. PER THE COA'S ASBESTOS SURVEY REPORTS, THERE IS "NO ASBESTOS DETECTED" (NAD) IN THE AREAS OF THE BUILDING WHERE THE PROJECTED WORK WILL BE UPGRADED. NO ASBESTOS WAS DETECTED IN THE WINDOWS CAULK, CMU WALLS, PUMPS, ACCESSIBLE PUMPS GASKETS AND ALL ASSOCIATED PIPING AND INSULATION. NO FILL MATERIAL WAS DISCOVERED IN THE AREAS WHERE THE CMU WILL BE REPAIRED/REPLACED OR REMOVED.

2. PER THE COA'S LEAD BASE PAINT SURVEY REPORTS, THE LEAD BASE PAINT SAMPLES COLLECTED AND ANALYZED FROM THE PUMPING EQUIPMENT AND ASSOCIATED PIPES, THERMAL PIPE INSULATION; AND PAINTED METAL GAS LINES THAT RUNS ALONG THE INTERIOR WALLS NEAR THE CEILING ARE ALL BELOW THE US EPA HUD GUIDELINES FOR LEAD BASE PAINT. PROPER WORK PRACTICES AND PPE IS REQUIRED WHERE ANY CUTTING AND OR SAWING TAKES PLACE.

NOTES BY SYMBOL (X)

1. DEMO CONCRETE PLATFORM FOR ELECTRICAL PANEL (TYP.) (PANEL NOT SHOWN FOR CLARITY.)
2. DEMO EXISTING REINFORCED CONCRETE GBT PEDESTALS (TYP.)
3. DEMO EXISTING SLAB AND SUMP TO EXTENTS SHOWN. COORDINATE WITH PROPOSED DRAWINGS.

NOTES:

1. CONTRACTOR TO FIELD VERIFY ALL DIMENSIONS AND EXISTING CONDITIONS PRIOR TO CONSTRUCTION OR ORDERING MATERIALS.
2. SEE MECHANICAL AND ELECTRICAL SHEETS FOR INFORMATION AND DEMOLITION NOT SHOWN.
3. ALL DEMOLITION SHALL BE PER SPECIAL SPECIFICATION 03740

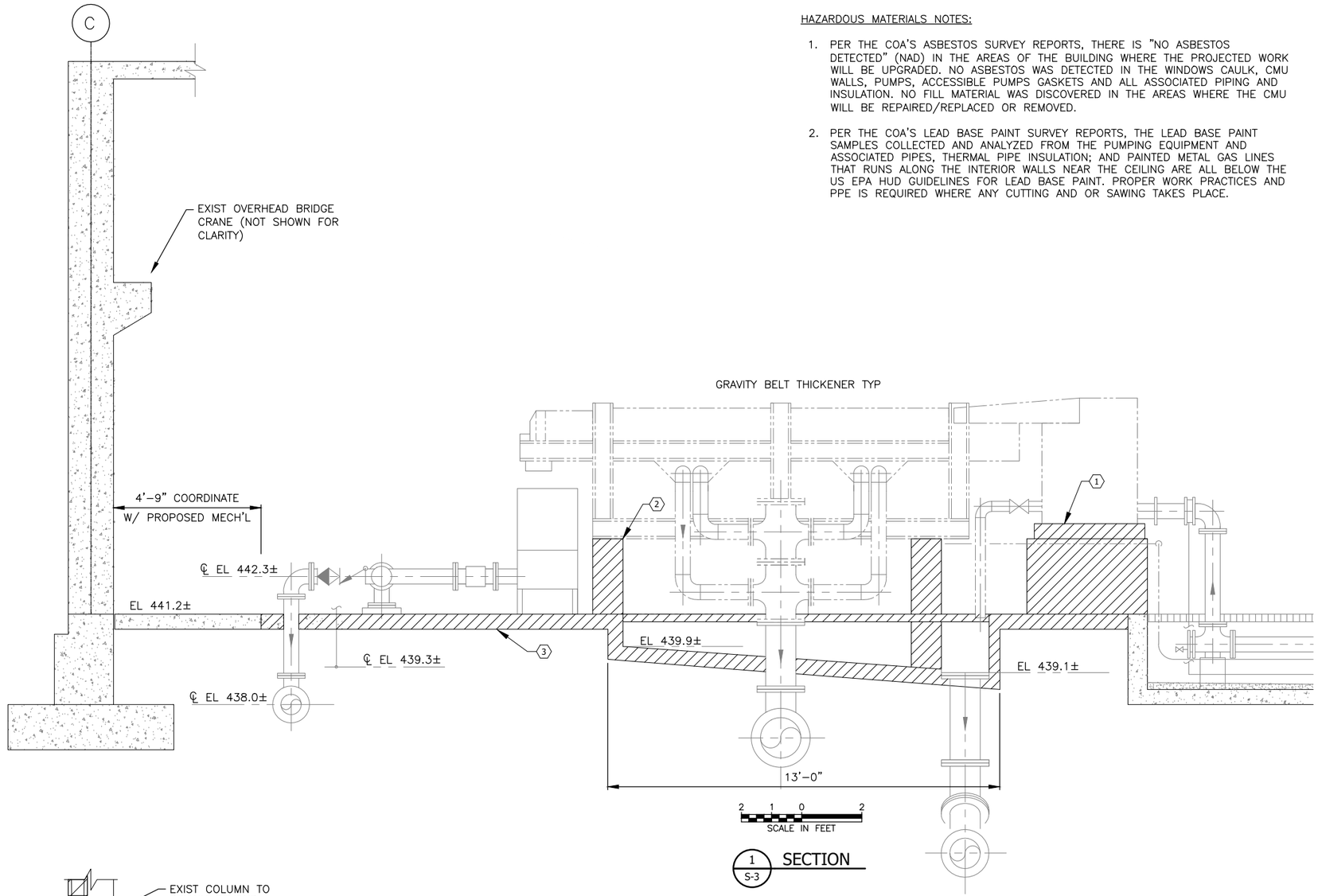

1 / S-3 SECTION

LEGEND

ITEMS TO BE DEMOLISHED

TO REMAIN

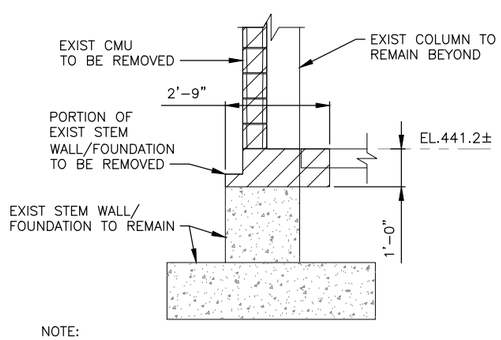

NOTE:

1. THE EXTENTS OF EXISTING STEM WALL/ FOUNDATION TO BE DEMOLISHED SHALL MATCH THE CLEAR OPENING OF THE OVERHEAD DOOR LIMITS. REFER TO ARCHITECTURAL SHEETS FOR OVERHEAD DOOR INFORMATION.

2 / S-3 SECTION

CP&Y, INC.
TBPE FIRM REGISTRATION NO. F-1741

STATE OF TEXAS
CHRIS POTTER
13757
LICENSED
PROFESSIONAL ENGINEER
06/18/21

NO.	REVISION	BY	DATE

VERIFY SCALE 0 1" BAR IS ONE INCH ON ORIGINAL DRAWING. IF NOT ONE INCH ON THIS SHEET, ADJUST SCALE

CITY OF AUSTIN – AUSTIN WATER
HORNSBY BEND BMP CENTRIFUGES

STRUCTURAL DEMOLITION – SECTIONS

Date: MAY 2021
Designed: C.POTTER
Drawn: P.VILLARREAL
Reviewed: J.WOUTERS
CP&Y Proj. AUST1600646.01

SHEET
S-5

REFERENCES: _CPY_Standard_Border_Base.dwg _Std ENVIRO SEALS.dwg AUST1600646.01_P_SBase
Jun 02, 2021 – 8:02am C:\pwworking\cpy\gw_cpy\cpotter\d0795251\AUST1600646.01_4_S-5_CPY.dwg

NOTES BY SYMBOL (X)

1. PROP TRENCH AND CENTRIFUGE FOUNDATIONS.
2. PROP 316 SS LADDER, REFER TO SPEC(S). SEE NOTE 3.
3. 6" CONCRETE CURB W/ 316 SS REMOVABLE GUARDRAIL. PROVIDE SAFETY GATE AT LADDER OPENINGS.
4. FRP PLATFORM. REFER TO MECH'L PLANS AND SPEC(S). PROVIDE 316 SS REMOVABLE GUARDRAIL ALL SIDES.
5. TRENCH DRAIN. REFER TO MECH'L PLANS AND SPEC(S).
6. TRENCH SLOPE, TYP. MATCH SLOPE OF EXISTING CENTRIFUGE TRENCH.
7. PROP 6" SLAB. COORDINATE LOCATIONS AND EXTENTS WITH MECH'L PLANS.
8. INSTALL (6) FRONTLINE COM345K-SS OR APPROVED EQUAL FALL PROTECTION TIE-OFF POINTS. SEE NOTE 4.

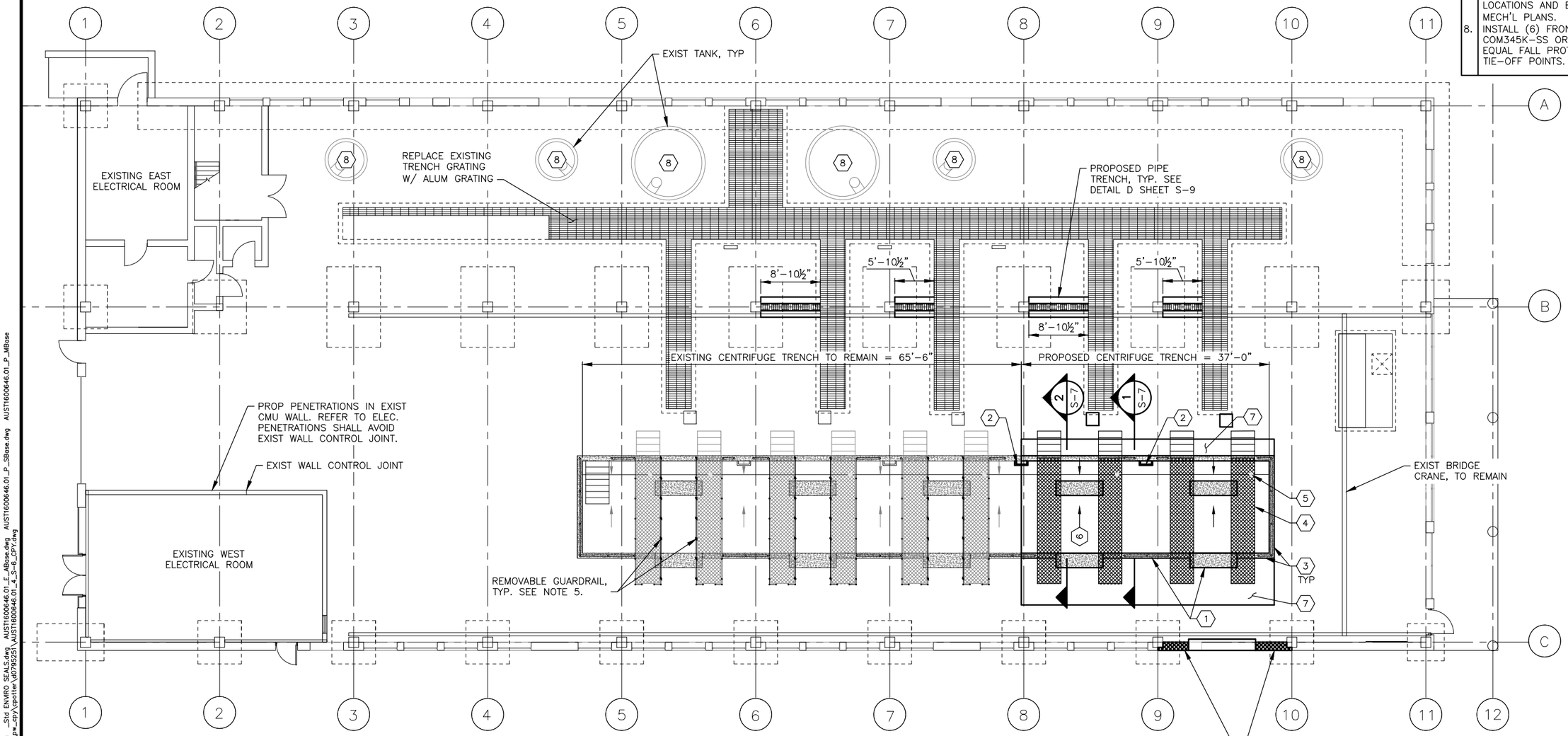

GENERAL NOTES:

1. CONTRACTOR TO FIELD VERIFY ALL DIMENSIONS AND EXISTING CONDITIONS PRIOR TO CONSTRUCTION OR ORDERING MATERIALS.
2. SEE ARCHITECTURAL, HVAC, MECHANICAL AND ELECTRICAL SHEETS FOR INFORMATION NOT SHOWN.
3. COORDINATE LADDER PLACEMENT WITH OVERHEAD ODOR CONTROL DUCT WORK.
4. STAINLESS STEEL FALL PROTECTION TIE-OFF POINTS SHALL BE INSTALLED PER MFR INSTALLATION INSTRUCTIONS, INCLUDING MINIMUM EDGE DISTANCE REQUIREMENTS. COORDINATE EXACT LOCATIONS W/ OWNER.
5. CONTRACTOR SHALL INSTALL 316SS REMOVABLE GUARDRAIL SECTIONS TO EQUIPMENT SIDE OF EXISTING CENTRIFUGE ACCESS PLATFORMS. REROUTE EXISTING CONDUIT/MECH'L LINES AS NEEDED TO INSTALL NEW SECTIONS OF GUARDRAIL AT NO ADDITIONAL COST TO THE OWNER.

CP&Y, INC.
TBPE FIRM REGISTRATION NO. F-1741

STATE OF TEXAS
CHRIS POTTER
133757
LICENSED
PROFESSIONAL ENGINEER
05/19/21

NO.	REVISION	BY	DATE

VERIFY SCALE 0 1"
BAR IS ONE INCH ON ORIGINAL DRAWING. IF NOT ONE INCH ON THIS SHEET, ADJUST SCALE

CITY OF AUSTIN – AUSTIN WATER
HORNSBY BEND BMP CENTRIFUGES

STRUCTURAL PLAN

Date: MAY 2021
Designed: C.POTTER
Drawn: P.VILLARREAL
Reviewed: J.WOUTERS
CP&Y Proj: AUST1600646.01

SHEET
S-6

REFERENCES: _CPY_Standard_Border_Base.dwg _Std ENVIRO SEALS.dwg AUST1600646.01_E_ABase.dwg AUST1600646.01_P_SBase.dwg AUST1600646.01_P_MBase
May 21, 2021 – 9:52am C:\pwworking\cpy\pw_cpy\cpotter\d0795251\AUST1600646.01_4_S-6_CPY.dwg

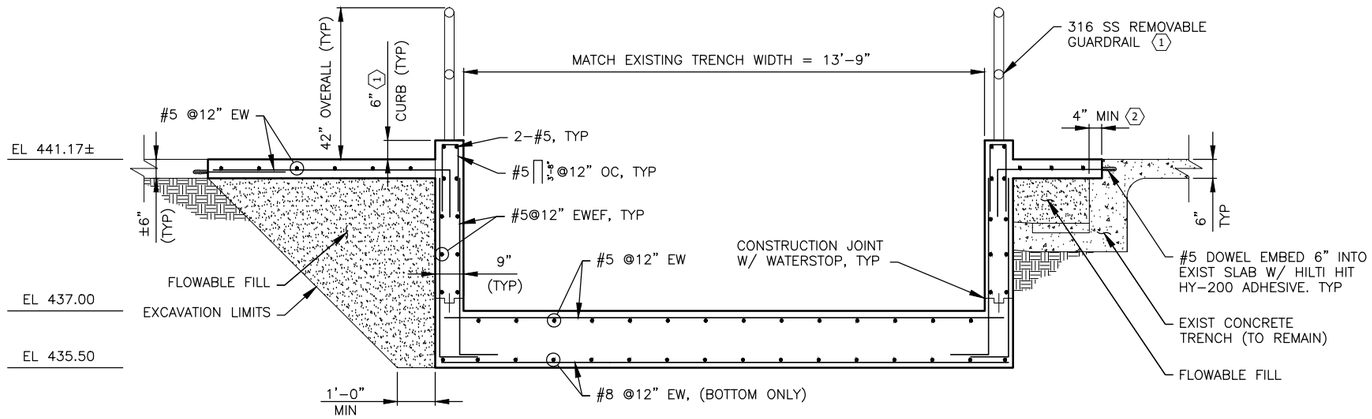

1 S-6 TYPICAL TRENCH SECTION

SCALE IN FEET

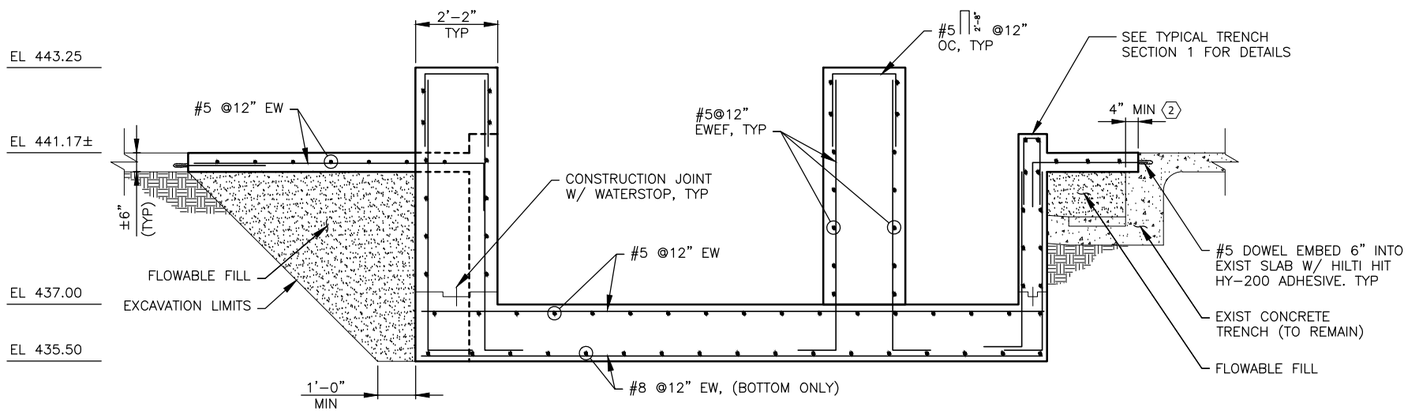

2 S-6 TRENCH SECTION AT ANDRITZ FOUNDATION

SCALE IN FEET

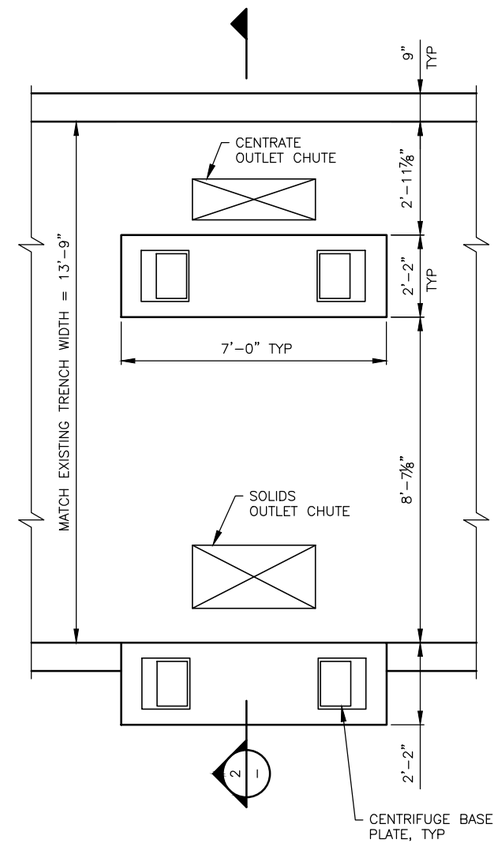

ANDRITZ FOUNDATION PLAN

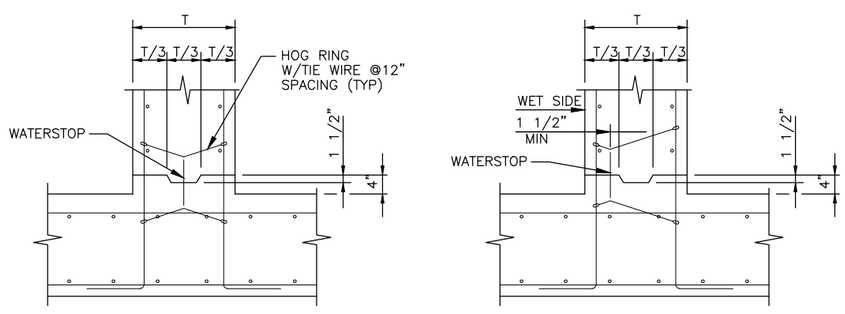

A WALL CONSTRUCTION JOINT AT SLAB DETAIL
NTS

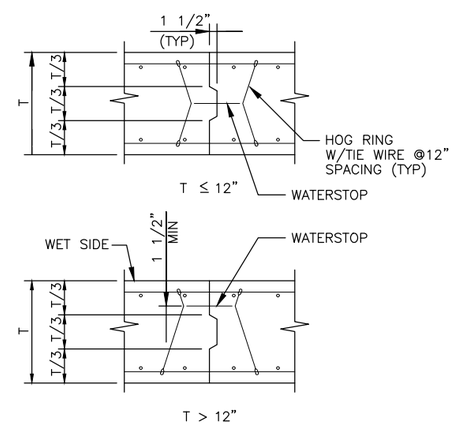

B SLAB CONSTRUCTION JOINT DETAIL
NTS

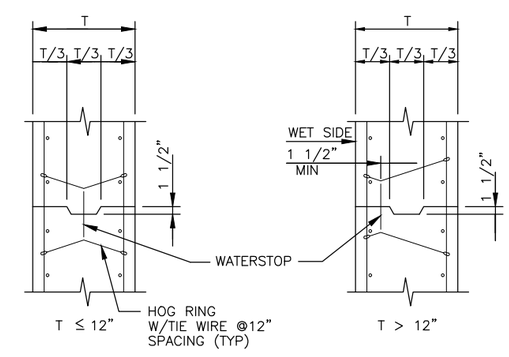

C WALL CONSTRUCTION JOINT DETAIL
NTS

NOTES BY SYMBOL (X)

1. OMIT CURB AND HANDRAIL AT PROP LADDER LOCATIONS. SEE PLAN VIEW. CONTRACTOR TO PROVIDE FIELD LOCATED 12" GAPS IN CURB TO ALLOW DRAINAGE OF THICKENER BUILDING SLAB.
2. SAWCUT TO REMOVE EMBEDDED ANGLE. ADJUST AS NEEDED.

NOTES:

1. CONTRACTOR TO FIELD VERIFY ALL DIMENSIONS AND EXISTING CONDITIONS PRIOR TO CONSTRUCTION OR ORDERING MATERIALS.
2. SEE MECHANICAL, ARCHITECTURAL, HVAC, AND ELECTRICAL SHEETS FOR INFORMATION NOT SHOWN.
3. ADJUST EXCAVATION LIMITS AS NEEDED TO ACCOMMODATE PROCESS/DRAIN PIPE MODIFICATIONS. REFER TO MECHANICAL.

CP&Y, INC.
TBPE FIRM REGISTRATION NO. F-1741

CITY OF AUSTIN EST. 1839 FOUNDED

STATE OF TEXAS
CHRIS POTTER
133757
LICENSED PROFESSIONAL ENGINEER

NO.	REVISION	BY	DATE

VERIFY SCALE 0 1" BAR IS ONE INCH ON ORIGINAL DRAWING. IF NOT ONE INCH ON THIS SHEET, ADJUST SCALE

CITY OF AUSTIN – AUSTIN WATER
HORNSBY BEND BMP CENTRIFUGES

CENTRIFUGE FOUNDATION PLANS

Date: MAY 2021
Designed: C.POTTER
Drawn: P.VILLARREAL
Reviewed: J.WOUTERS
CP&Y Proj. AUST1600646.01

SHEET
S-7

REFERENCES: _CPY_Standard_Border_Base.dwg _Std ENVIRO SEALS.dwg AUST1600646.01_P_SBase
May 20, 2021 – 9:57am C:\pwworking\cpy\pw_cpy\cpotter\d0795251\AUST1600646.01_4_S-7_CPY.dwg

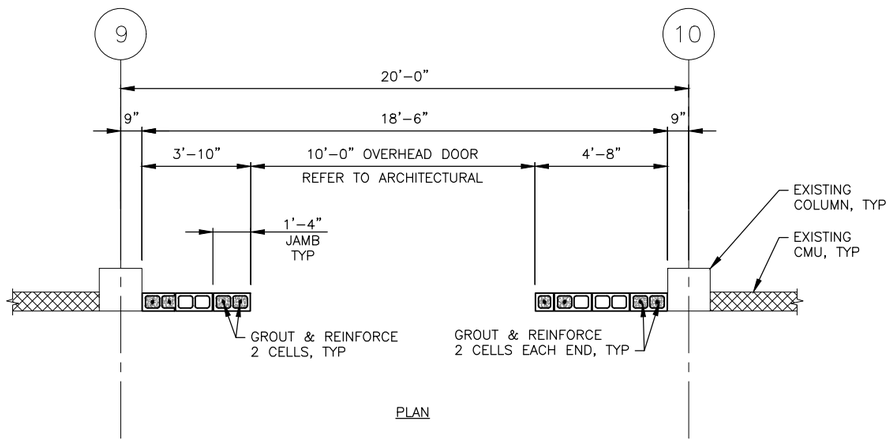

PLAN

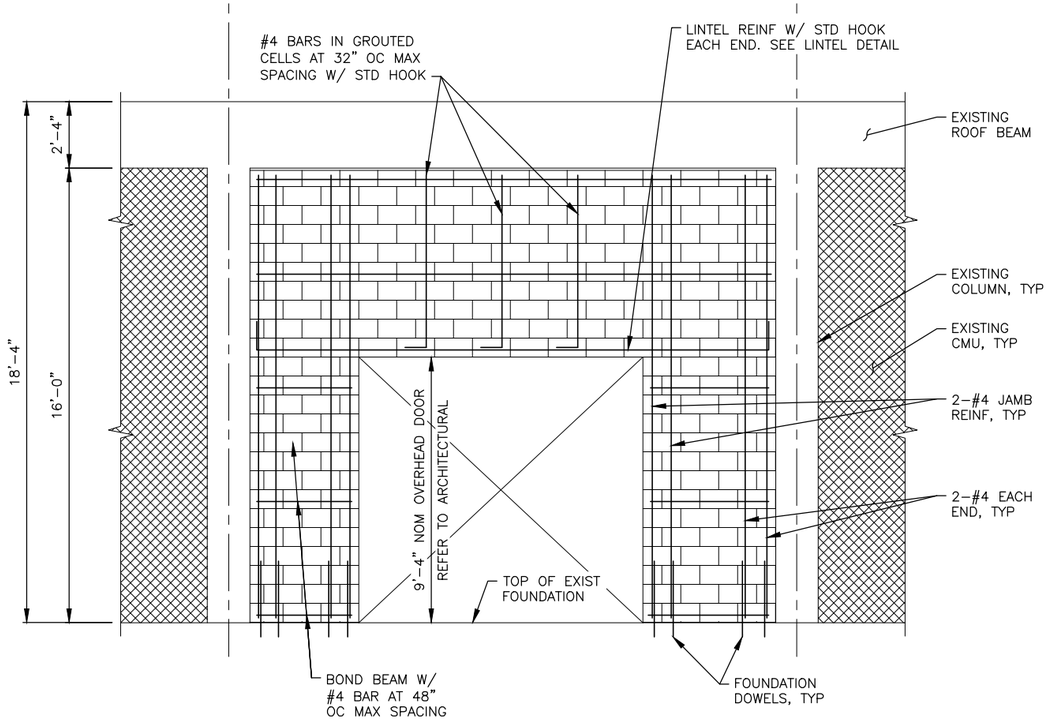

ELEVATION

A PROP CMU INFILL WALL
NTS

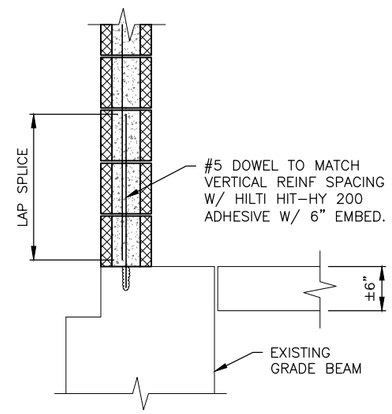

B PROP CMU ANCHORAGE
NTS

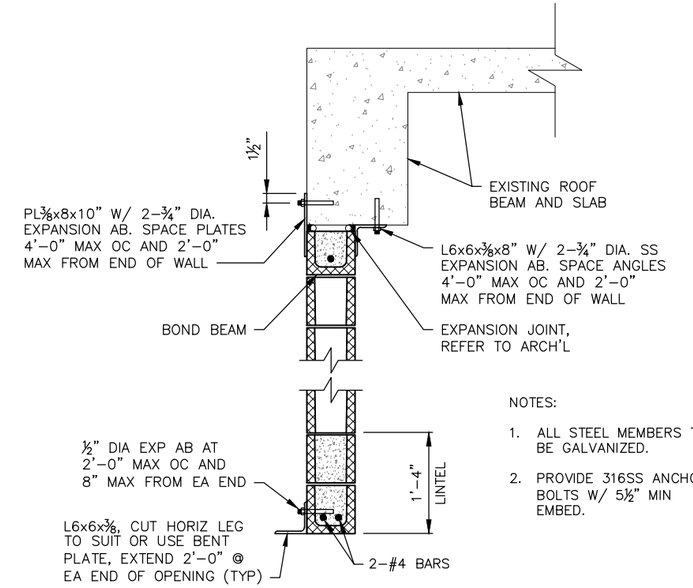

NOTES:

1. ALL STEEL MEMBERS TO BE GALVANIZED.
2. PROVIDE 316SS ANCHOR BOLTS W/ 5½" MIN EMBED.

C PROP LINTEL DETAIL
NTS

STEEL LINTEL SCHEDULE		
MASONRY OPENING, S	ANGLE SIZE	VENEER SUPPORT SIZE
16"< S ≤ 4'–0"	L 3 1/2 X 3 1/2 X 1/4	L 4 X 3 1/2 X 1/4 (LLH)
4'–0"< S ≤ 6'–0"	L 4 X 4 X 1/4	L 6 X 4 X 5/16 (LLH)
6'–0"< S ≤ 7'–0"	L 6 X 4 X 5/16 (LLV)	L 6 X 6 X 5/16
7'–0"< S ≤ 8'–0"	L 7 X 4 X 3/8 (LLV)	L 6 X 6 X 5/16

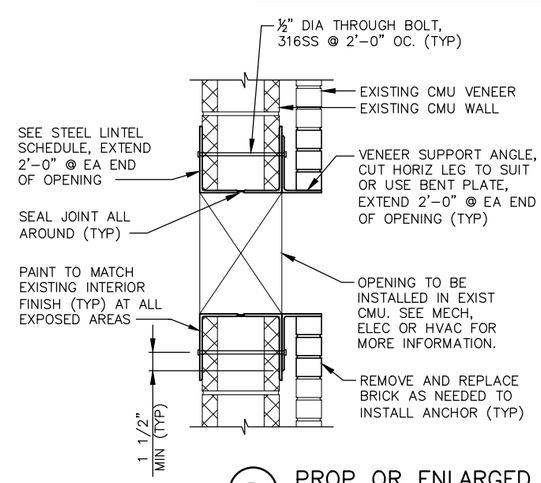

NOTES:

1. ALL STEEL MEMBERS TO BE GALVANIZED.
2. NO STEEL LINTEL NECESSARY FOR RECTANGULAR OPENINGS WITH DIMENSIONS OF 16" OR LESS AND CIRCULAR OPENINGS WITH OUTSIDE DIAMETERS OF 16" OR LESS.
3. REFER TO ARCH'L, STRU'L, ELEC, MECH AND/OR HVAC SHEETS FOR OPENING, LOUVER OR FAN SIZES AND LOCATIONS.
4. CONTRACTOR IS SOLELY RESPONSIBLE FOR CONSTRUCTION SAFETY. ENGINEER IS NOT RESPONSIBLE FOR MEANS & METHODS OF CONSTRUCTION TO INSTALL OPENING, LOUVER OR FAN AT EXISTING CMU & BRICK.
5. CONTRACTOR TO INSTALL GALVANIZED STEEL LINTEL ABOVE OPENING PRIOR TO DEMOLITION OF THE EXISTING CMU BLOCK AND BRICK. EXTEND LINTEL 2'–0" MIN BEYOND OPENING AT EACH SIDE. REINFORCE SIDE AND BOTTOM OF OPENING WITH GALVANIZED STEEL ANGLE TO MATCH LINTEL ANGLE. ANGLE SHALL BE SECURELY ANCHORED TO CMU AND SHALL COMPLETELY COVER THE INTERIOR AND FACE OF RAW OPENING. WELD TOGETHER WHERE STEEL INTERSECTS AT CORNER AND AT LINTELS. GROUT AS REQUIRED TO SEAL AGAINST EXISTING CMU WALL.

D PROP OR ENLARGED OPENING @ EXIST CMU WALL
NTS

CP&Y, INC.
TBPE FIRM REGISTRATION NO. F–1741

CITY OF AUSTIN ESTD 1839 FOUNDED

STATE OF TEXAS
CHRIS POTTER
13757
LICENSED PROFESSIONAL ENGINEER
05/20/21

NO.	REVISION	BY	DATE

VERIFY SCALE 0 1" BAR IS ONE INCH ON ORIGINAL DRAWING. IF NOT ONE INCH ON THIS SHEET, ADJUST SCALE

CITY OF AUSTIN – AUSTIN WATER
HORNSBY BEND BMP CENTRIFUGES

STRUCTURAL DETAILS I

Date: MAY 2021
Designed: C.POTTER
Drawn: P.VILLARREAL
Reviewed: J.WOUTERS
CP&Y Proj. AUST1600646.01

SHEET
S–8

REFERENCES: _CPY_Standard_Border_Base.dwg _Std ENVIRO SEALS.dwg AUST1600646.01_P_SBase
May 20, 2021 – 9:59am C:\pwworking\cpy\pw_cpy\cpotter\d0795251\AUST1600646.01_4_S–8.dwg

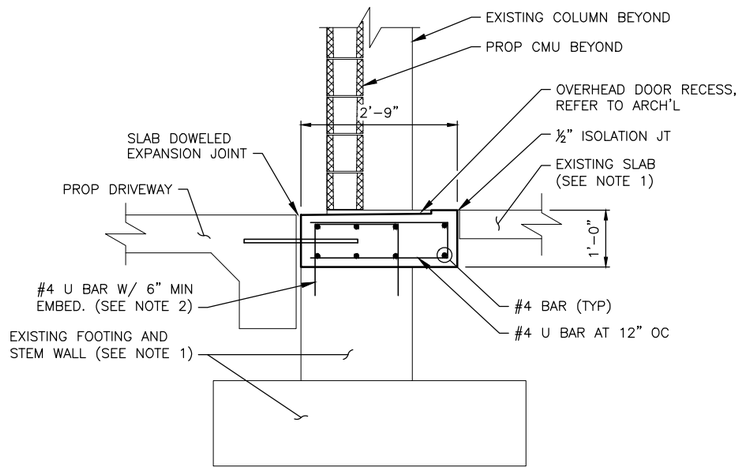

NOTES:

1. CONTRACTOR TO VERIFY EXISTING CONCRETE CONDITION AND THICKNESS PRIOR TO CONSTRUCTION OR ORDERING MATERIALS. CLEAN AND ROUGHEN TOP SURFACE IN CONTACT WITH NEW CONCRETE PRIOR TO INSTALLATION.
2. DOWEL INTO EXISTING STEM WALL/FOOTING USING HILTI HIT-RE 500 V3 EPOXY ADHESIVE OR APPROVED EQUAL. INSTALL EPOXY ADHESIVE PER MANUFACTURER SPECIFICATIONS AND INSTALLATION INSTRUCTIONS.

A OVERHEAD DOOR SILL DETAIL

NTS

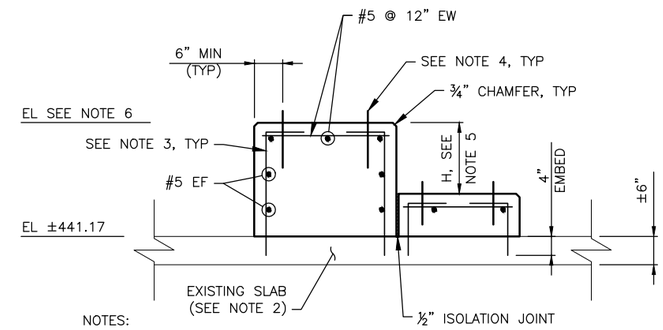

NOTES:

1. COORDINATE PLAN DIMENSIONS W/ PUMP MANUFACTURER AND PLAN LOCATIONS WITH MECHANICAL SHEETS.
2. CONTRACTOR TO VERIFY SLAB EXISTING CONDITION AND THICKNESS PRIOR TO CONSTRUCTION OR ORDERING MATERIALS. CLEAN AND ROUGHEN TOP SURFACE IN CONTACT WITH PUMP BASE PRIOR TO INSTALLATION.
3. #5 DOWELS W/ STD HOOK AT 12" AROUND PERIMETER. DOWEL INTO EXISTING SLAB USING HILTI HIT-RE 500 V3 EPOXY ADHESIVE OR APPROVED EQUAL. INSTALL EPOXY ADHESIVE PER MANUFACTURER SPECIFICATIONS AND INSTALLATION INSTRUCTIONS.
4. ALL ANCHOR BOLTS TO BE 316 SS. BASEPLATE AND ANCHOR BOLT SIZE, NUMBER, SPACING ETC. AS REQUIRED BY PUMP MANUFACTURER.
5. COORDINATE STEP HEIGHT, H, WITH PUMP AND MACERATOR FLANGE HEIGHTS.
6. COORDINATE TOP OF CONCRETE ELEVATION WITH MECHANICAL DETAILS AND PUMP AND MACERATOR MANUFACTURERS.

B ROTARY LOBE PUMP/ MACERATOR BASE DETAIL

NTS

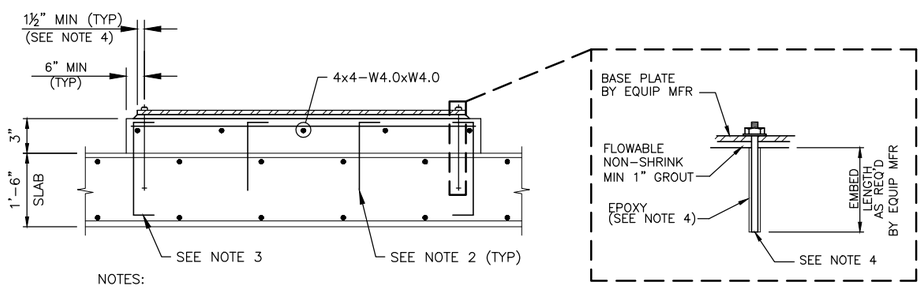

NOTES:

1. REFER TO MECHANICAL SHEETS AND COORDINATE W/ PUMP MFR FOR PAD DIMENSIONS AND LOCATIONS.
2. #3 DOWELS W/ STD HOOK AT 2'-0" MAXIMUM SPACING WITH A MINIMUM OF 2 DOWELS IN EACH DIRECTION.
3. #3 DOWELS W/ STD HOOK T&B AT 12" AROUND THE PERIMETER.
4. ALL ANCHOR BOLTS TO BE 316 SS. INSTALL ANCHOR BOLTS USING HILTI HIT-RE 500 V3 OR HVU CAPSULE TO THE DEPTH REQUIRED BY THE MANUFACTURER. BASE PLATE, ANCHOR BOLT SIZE, NUMBER & LOCATION AS REQUIRED BY EQUIPMENT MANUFACTURER. PROVIDE MINIMUM EDGE DISTANCE IN BASE PLATE PER AISC.
5. PROVIDE 1.5" CLEAR COVER TO ALL STEEL AT EXPOSED SURFACES.
6. USE 4,000 PSI CONCRETE WITH 3/8-INCH MAXIMUM AGGREGATE.

C THICKENED SLUDGE DISCHARGE EQUIPMENT PAD DETAIL

NTS

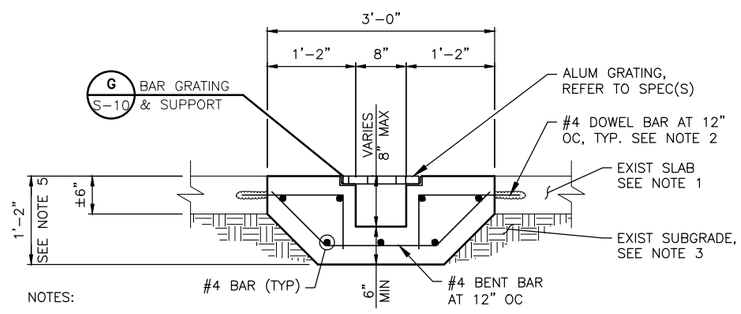

NOTES:

1. CONTRACTOR TO VERIFY EXISTING CONCRETE CONDITION AND THICKNESS PRIOR TO CONSTRUCTION OR ORDERING MATERIALS. CLEAN AND ROUGHEN SURFACE IN CONTACT WITH NEW CONCRETE PRIOR TO INSTALLATION.
2. DOWEL INTO SLAB USING HILTI HIT-RE 500 V3 EPOXY ADHESIVE OR APPROVED EQUAL. INSTALL EPOXY ADHESIVE PER MANUFACTURER SPECIFICATIONS AND INSTALLATION INSTRUCTIONS.
3. EXISTING SOIL SUBGRADE SHALL BE SCARIFIED, MOISTURE CONDITIONED, AND RE-COMPACTED TO 95% STANDARD PROCTOR DENSITY PRIOR TO CONCRETE PLACEMENT. EXISTING FLOW-FILL SUBGRADE SHALL BE CLEANED AND FREE OF LOOSE MATERIAL PRIOR TO CONCRETE PLACEMENT.
4. SLOPE PIPE TRENCH ⅛" PER FOOT TOWARD EXISTING MECHANICAL TRENCHES.
5. OVERALL DEPTH OF TRENCH SECTION MAY NEED TO BE ADJUSTED DUE TO ACTUAL DEPTH OF EXISTING BUILDING COLUMN FOUNDATIONS. CONTRACTOR SHALL NOTIFY THE ENGINEER OF ANY CONFLICT DUE TO OBSERVED FIELD CONDITIONS.

D PIPE TRENCH DETAIL

NTS

CP&Y, INC.
TBPE FIRM REGISTRATION NO. F-1741

NO.	REVISION	BY	DATE

VERIFY SCALE 0 1"
BAR IS ONE INCH ON ORIGINAL DRAWING. IF NOT ONE INCH ON THIS SHEET, ADJUST SCALE

CITY OF AUSTIN – AUSTIN WATER
HORNSBY BEND BMP CENTRIFUGES

STRUCTURAL DETAILS II

Date: MAY 2021
Designed: C.POTTER
Drawn: P.VILLARREAL
Reviewed: J.WOUTERS
CP&Y Proj. AUST1600646.01

SHEET
S-9

REFERENCES: _CPY_Standard_Border_Base.dwg _Std ENVIRO SEALS.dwg AUST1600646.01_P_SBase
May 20, 2021 – 10:02am C:\pwworking\cpy\pw_cpy\cpotter\d0795251\AUST1600646.01_4_S-9.dwg

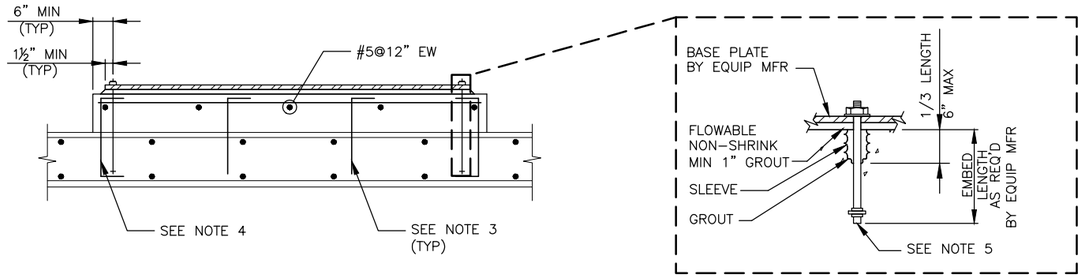

NOTES:

1. REFER TO MECHANICAL OR ELECTRICAL SHEETS FOR PAD DIMENSIONS AND LOCATIONS.
2. PAD THICKNESS 6" MINIMUM OR GREATER IF REQUIRED BY EQUIPMENT MANUFACTURER.
3. #4 DOWELS W/ STD HOOK AT 2'-0" MAXIMUM SPACING WITH A MINIMUM OF 2 DOWELS IN EACH DIRECTION.
4. #5 DOWELS W/ 12" MIN LEGS @ 12" AROUND THE PERIMETER.
5. ALL ANCHOR BOLTS TO BE 316 SS. BASE PLATE, ANCHOR BOLT SIZE, NUMBER & LOCATION AS REQUIRED BY EQUIPMENT MANUFACTURER.

A EQUIPMENT PAD AT NEW SLAB
NTS

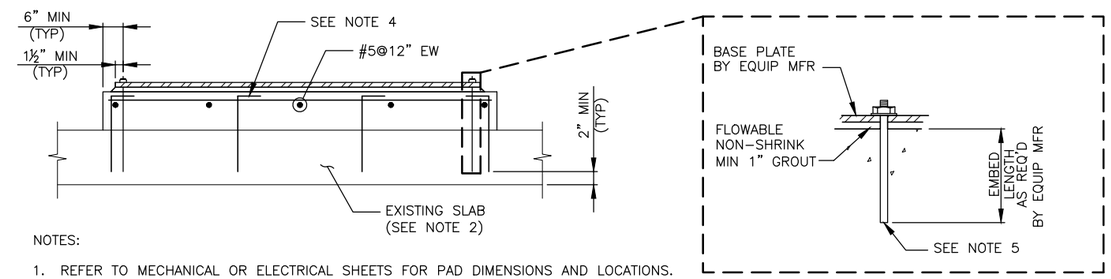

NOTES:

1. REFER TO MECHANICAL OR ELECTRICAL SHEETS FOR PAD DIMENSIONS AND LOCATIONS.
2. CONTRACTOR TO VERIFY SLAB EXISTING CONDITION AND THICKNESS PRIOR TO CONSTRUCTION OR ORDERING MATERIALS. CLEAN AND ROUGHEN TOP SURFACE IN CONTACT WITH EQUIPMENT PAD AND APPLY BONDING AGENT PRIOR TO INSTALLATION.
3. PAD THICKNESS 6" MINIMUM OR GREATER IF REQUIRED BY EQUIPMENT MANUFACTURER.
4. #4 DOWELS W/ STD HOOK AT 2'-0" MAXIMUM SPACING WITH A MINIMUM OF 2 DOWELS IN EACH DIRECTION. DOWEL INTO EXISTING SLAB USING HILTI HIT-HY 200 OR HVU CAPSULE. REDUCE STANDARD EMBEDMENT DEPTH TO MAINTIAN 2" MINIMUM END COVER AS REQUIRED.
5. ALL ANCHOR BOLTS TO BE 316 SS. BASE PLATE AND ANCHOR BOLT SIZE, NUMBER, SPACING ETC. AS REQUIRED BY EQUIPMENT MANUFACTURER. POST-INSTALL ANCHOR BOLTS INTO EXISTING SLAB AS REQUIRED.

B EQUIPMENT PAD AT EXISTING SLAB
NTS

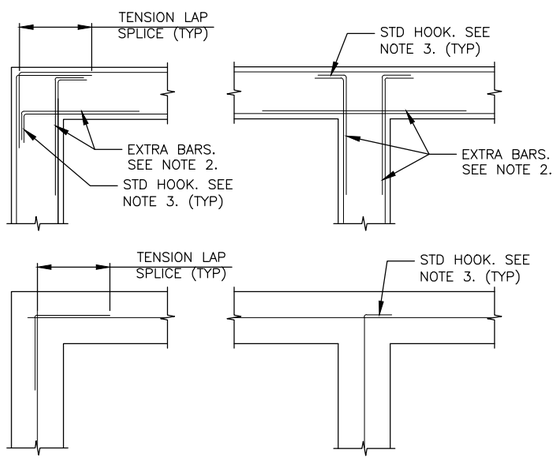

NOTES:

1. VERTICAL REINFORCEMENT NOT SHOWN FOR CLARITY.
2. USE DEVELOPMENT LENGTH AND LAP SPLICE LENGTH FOR TOP BARS UON.
3. STANDARD HOOKS SHALL BE FULLY DEVELOPED FOR TOP BARS IN TENSION. IF NOT POSSIBLE, EXTEND THE BAR LEG TO DEVELOPMENT LENGTH REQUIRED FOR TOP BARS.
4. EXTRA BARS, SAME SIZE AND SPACING AS HORIZONTAL REINFORCEMENT, SHALL BE PROVIDED ON INSIDE FACE OF WATER CONTAINING STRUCTURES. EXTRA BARS SHALL ALTERNATE WITH HORIZONTAL REINFORCEMENT. STAGGER EXTRA BARS IN EACH WALL.

C WALL CORNER REINFORCING DETAIL
NTS

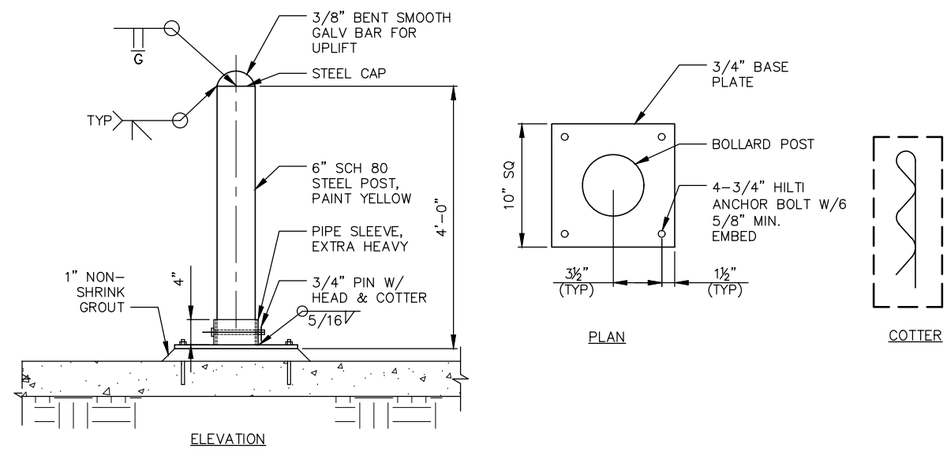

D FLOOR MOUNT REMOVABLE BOLLARD
NTS

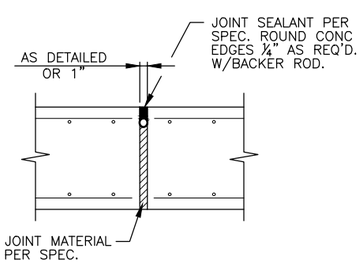

NOTE:
REFER TO PLAN FOR SLAB JOINT LOCATIONS.

E SLAB ISOLATION JOINT DETAIL
NTS

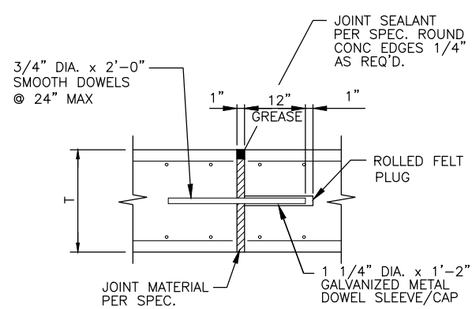

NOTE:
REFER TO PLAN FOR SLAB JOINT LOCATIONS.

F SLAB DOWELED EXPANSION JOINT DETAIL
NTS

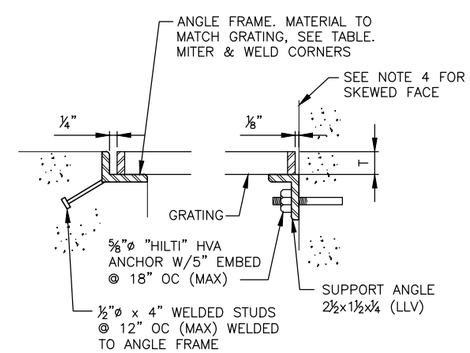

GRATING FRAME TABLE	
GRATING DEPTH, T	FRAME ANGLE
1"	2½x1½x¼"
1¼"	2½x1½x¼"
1½"	2½x2x¼"
1¾"	2½x2x¼"
2"	2½x2½x½"

NOTES:

1. ALL GRATING ENDS AND OPENINGS SHALL BE BANDED.
2. ALL GRATING SHALL BE SECURED IN PLACE WITH REMOVABLE FASTENERS OR WELDINGS.
3. FOR REMOVABLE GRATING SECTION, WEIGHT SHALL NOT EXCEED 80 LBS.
4. FOR SKEWED FACE, USE BENT PLATE IN LIEU OF ANGLE (SAME SIZE & THICKNESS).
5. ALL BOLTS, RIVETS, ANCHOR BOLTS & FASTENERS SHALL BE 316 SS UNO.
6. FOR ALUMINUM CONSTRUCTION, REFER TO SPECIFICATIONS FOR TREATMENT OF EMBEDED/CONTACT SURFACES.

G BAR GRATING & SUPPORT
NTS

CP&Y, INC.
TBPE FIRM REGISTRATION NO. F-1741

STATE OF TEXAS
CHRIS POTTER
13757
LICENSED PROFESSIONAL ENGINEER
05/19/21

NO.	REVISION	BY	DATE

VERIFY SCALE 0 1"
BAR IS ONE INCH ON ORIGINAL DRAWING. IF NOT ONE INCH ON THIS SHEET, ADJUST SCALE

CITY OF AUSTIN – AUSTIN WATER
HORNSBY BEND BMP CENTRIFUGES

STRUCTURAL STANDARD DETAILS I

Date: MAY 2021
Designed: C.POTTER
Drawn: P.VILLARREAL
Reviewed: J.WOUTERS
CP&Y Proj. AUST1600646.01

SHEET
S-10

REFERENCES: _CPY_Standard_Border_Base.dwg _Std ENVIRO SEALS
May 20, 2021 - 10:04am C:\pwworking\cpy\pw_cpy\cpotter\d0795251\AUST1600646.01_4_S-10_CPY.dwg

VALVE SYMBOLS

- AIR RELIEF & VACUUM VALVE (AV)
- AIR RELEASE VALVE (AR)
- ANGLE VALVE
- BACKFLOW PREVENTER
- BALL CHECK VALVE
- BALL VALVE
- GATE VALVE
- KNIFE GATE VALVE
- MUD VALVE
- MULTI PORT VALVE
- NEEDLE VALVE
- PINCH VALVE
- BUTTERFLY VALVE
- COMBINATION AIR VALVE (CA)
- CONE VALVE
- DIAPHRAGM VALVE
- DOUBLE DISC CHECK VALVE
- FLAP GATE
- PLUG VALVE
- PUMP CONTROL VALVE
- SOLENOID VALVE (S)
- MOTOR ACTUATOR VALVE (M)
- SWING CHECK VALVE
- GLOBE VALVE
- PRESSURE RELIEF VALVE

PIPING SYMBOLS

- COUPLING FOR GROOVED END JOINTS
- DIRECTION OF FLOW
- FLANGED JOINT
- MECHANICAL COUPLING
- MECHANICAL JOINT
- RESTRAINED MECHANICAL COUPLING
- QUICK CONNECT COUPLING
- UNION
- WELDED JOINT

MISCELLANEOUS SYMBOLS

- FLOOR DRAIN
- OPEN EQUIPMENT DRAIN
- CONCENTRIC REDUCER OR REDUCING BUSHING
- ECCENTRIC REDUCER OR REDUCING BUSHING
- Y-STRAINER
- CENTRIFUGE
- ROTARY LOBE PUMP
- MACERATOR
- BLIND FLANGE
- CENTRIFUGAL PUMP
- MIXER
- SUBMERSIBLE PUMP
- PROGRESSIVE CAVITY PUMP
- MAG METER
- SOLIDS METER

FLUID ABBREVATION	FUNCTION THIS LIST MAY INCLUDE SOME LINES NOT USED IN THIS PROJECT	PIPING MATERIALS (SEE SCHEDULE BELOW)			
		EXPOSED PIPING GROUP NO.		BURIED PIPING GROUP NO.	
		4" DIA AND SMALLER	6" DIA AND LARGER	4" DIA AND SMALLER	6" DIA AND LARGER
D	DRAIN	15,16,43	11,15,16,26,43	16	16,26
PW	POTABLE WATER	11,15,16,24,33,43	11,15,16,43	11,16,24	11,16
WW	WASTEWATER	–	11	–	11,16
NPW	NON-POTABLE WATER (UTILITY WATER)	11,15,16,43	11,15,16,43	11,15,16,43	11
POS	POLYMER SOLUTION	16	16	16	16
SL	SLUDGE	11	11	11	11
TSL	THICKENED SLUDGE	11	11	11	11
F	FILTRATE	11	11	11	11
C	CENTRATE	11	11,26	11	11

PIPE LEGEND

8" TSL (11)

- 11 — MATERIAL GROUP NUMBER
- TSL — FLUID ABBREVIATION
- 8" — PIPE DIAMETER (INCHES)

PIPING MATERIAL SCHEDULE (REFER ALSO TO SPECIFICATIONS 510, SP510, 511S, SP511S)

GROUP NO.	PIPE	FITTINGS	VALVES, 6" AND SMALLER
5	WELDED STEEL, AWWA C200/ASTM A134, UNLINED	WELDED STEEL, FABRICATED, AWWA C-200, UNLINED	AS INDICATED IN CONTRACT DOCUMENTS
11	DUCTILE IRON, ANSI A21.51/A21.10, (AWWA C-110/C-153), ENDS PUSH ON, FLANGED, OR MECHANICAL JOINT.	DUCTILE IRON AWWA C-110/C-153, PUSH ON, FLANGED, OR MECHANICAL JOINT.	GATE: AWWA C509, O-RING SEALS, MECHANICAL JOINT ENDS. ECCENTRIC PLUG: DEZURIK PEC, CAST IRON OR MILLIKEN 603E. BALL: PRATT OR APCO-WILLAMETTE. AS INDICATED ON DRAWINGS.
15	STAINLESS STEEL, TYPE 316, ASTM A312.	STAINLESS STEEL, TYPE 316 ANSI 816.9 BUTT-MOLDED SCHEDULE 10S OR 150 PSI FLANGE.	STAINLESS STEEL, AS INDICATED ON THE DRAWINGS.
16	POLYVINYL CHLORIDE, PRESSURE, SDR-14, AWWA C-900, CAST IRON PIPE SIZE DIAMETERS.	DUCTILE IRON AWWA C-110/C-153	AS INDICATED IN CONTRACT DOCUMENTS
17	POLYVINYL CHLORIDE, HEAVY WALL, GASKETED, SDR-26.	POLYVINYL CHLORIDE, HEAVY WALL, SDR-26.	AS INDICATED IN CONTRACT DOCUMENTS
24	COPPER, ASTM B88, HARD TEMPERED.	WROUGHT COPPER OR CAST BRONZE, ANSI B16.22, SOLDER JOINT, ISO PSI, OR COMPRESSION FITTINGS.	AS SPECIFIED AND AS INDICATED ON DRAWINGS.
33	STAINLESS STEEL TUBING, TYPE 316L, Rb 80, ASTM A632.	316 SS COMPRESSION FITTINGS.	–
43	STAINLESS STEEL, TYPE 304, ASTM A312.	STAINLESS STEEL, TYPE 304 ANSI B16.9 BUTT-WELDED SCHEDULE 10S OR 150 PSI FLANGED.	AS SPECIFIED AND AS INDICATED ON DRAWINGS.

PROPOSED EQUIPMENT SCHEDULE

EQUIPMENT TAG NO.	POSITION_ID*	NAME	DWG NO.	SERVICE	TYPE	DESIGN FLOW RATE	HORSEPOWER	OPERATOR
HB-TC-MRT-100	THK-CE1-MRT-01	MACERATOR 1	M-5	RAW BLENDED SLUDGE	GRIND & SHEAR	1000 GPM	10 HP	DIRECT DRIVE
HB-TC-MRT-200	THK-CE2-MRT-01	MACERATOR 2	M-5	RAW BLENDED SLUDGE	GRIND & SHEAR	1000 GPM	10 HP	DIRECT DRIVE
HB-TC-SLP-100	THK-CE1-SLP-01	THICKENER FEED PUMP 1	M-5	RAW BLENDED SLUDGE	ROTARY LOBE	450 GPM	40 HP	VFD
HB-TC-SLP-200	THK-CE2-SLP-01	THICKENER FEED PUMP 2	M-5	RAW BLENDED SLUDGE	ROTARY LOBE	450 GPM	40 HP	VFD
HB-TC-CE-100	THK-CENTRIFUGE-01	CENTRIFUGE 1	M-5	RAW BLENDED SLUDGE	THICKENING CENTRIFUGE	450 GPM	150/20 HP	VFD
HB-TC-CE-200	THK-CENTRIFUGE-02	CENTRIFUGE 2	M-5	RAW BLENDED SLUDGE	THICKENING CENTRIFUGE	450 GPM	150/20 HP	VFD
HB-TC-SLP-101	THK-CE1-SLP-02	THICKENER DISCHARGE PUMP 1	M-5	THICKENED SLUDGE	PROGRESSIVE CAVITY	180 GPM	50 HP	VFD
HB-TC-SLP-201	THK-CE2-SLP-02	THICKENER DISCHARGE PUMP 2	M-5	THICKENED SLUDGE	PROGRESSIVE CAVITY	180 GPM	50 HP	VFD
HB-TC-NP-002	THK-NPW-PMP-02	NPW PUMP 2	M-5	NON-POTABLE WATER	VERTICAL TURBINE	520 GPM	40 HP	CONSTANT SPEED
HB-TC-NP-003	THK-NPW-PMP-03	NPW PUMP 3	M-5	NON-POTABLE WATER	VERTICAL TURBINE	520 GPM	40 HP	CONSTANT SPEED

* POSITION_ID DESIGNATIONS ARE PER THE LATEST VERSION OF THE INFRASTRUCTURE MANAGEMENT DIVISION (IMD) INCOR EAM 11.4 DESIGN GUIDE, APPENDIX B4 AT THE TIME OF BID.

CP&Y, INC.
TBPE FIRM REGISTRATION NO. F-1741

CITY OF AUSTIN EST. 1839 FOUNDED

STATE OF TEXAS — KATELYN R. BACKHAUS — LICENSE NO. 135285 — LICENSED PROFESSIONAL ENGINEER

2/26/2021

NO.	REVISION	BY	DATE

VERIFY SCALE 0 1"
BAR IS ONE INCH ON ORIGINAL DRAWING. IF NOT ONE INCH ON THIS SHEET, ADJUST SCALE

CITY OF AUSTIN – AUSTIN WATER
HORNSBY BEND BMP CENTRIFUGES

MECHANICAL NOTES, SCHEDULES, SYMBOLS, & LEGENDS

Date: MAY 2021
Designed: P.VILLARREAL
Drawn: S.MEDINA
Reviewed: K.BACKHAUS
CP&Y Proj. AUST1600646.01

SHEET
M-1

REFERENCES: AUST1600646.01 Border Base.dwg _Std ENVIRO SEALS
May 24, 2021 – 12:19pm C:\pwworking\cpy\pw_cpy\pvillarreal\d0795251\AUST1600646.01_5_M-1_CPY.dwg

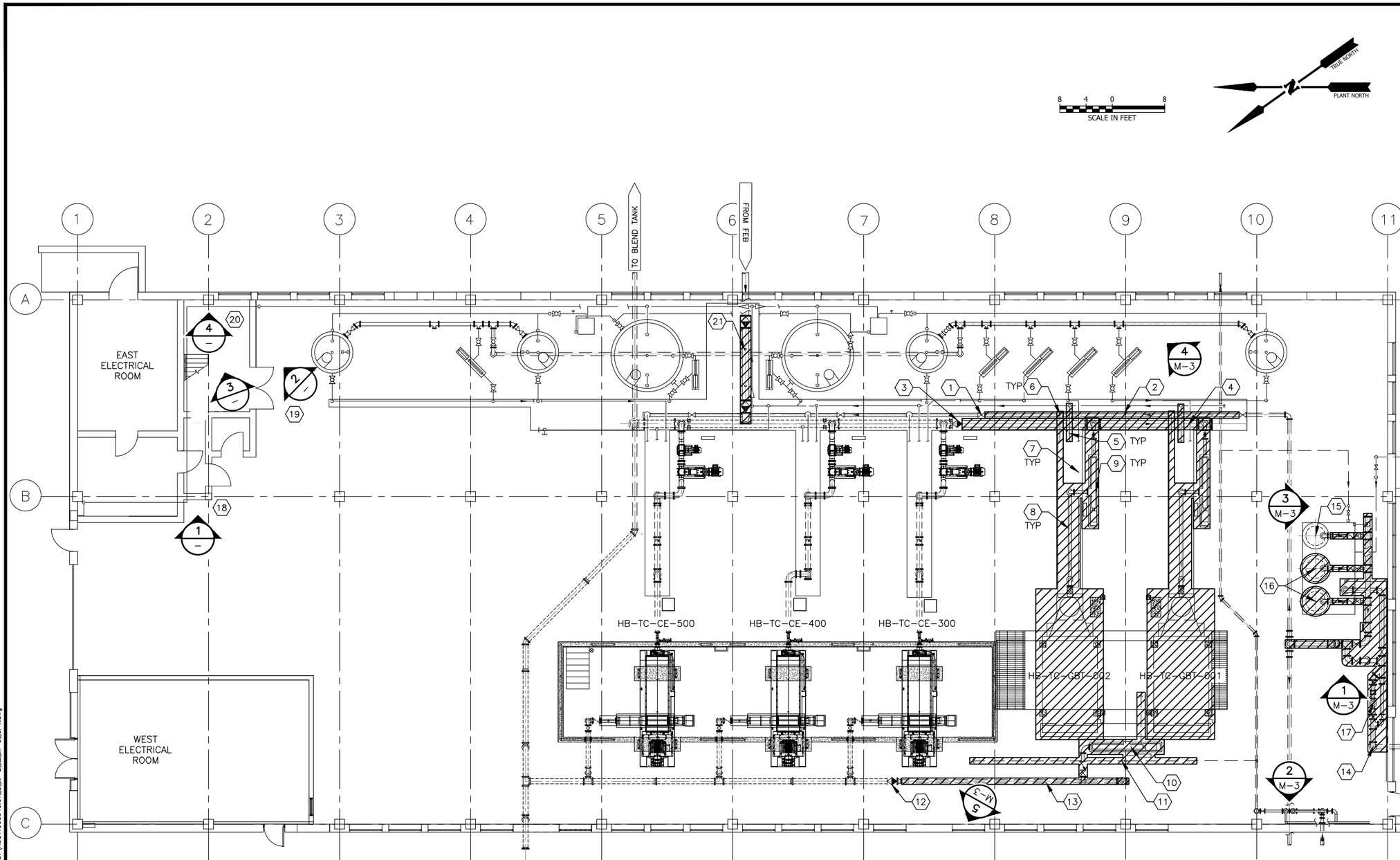

NOTES BY SYMBOL (X)

1. CLOSE 6" NON-POTABLE WATER GATE VALVE PRIOR TO DEMOLITION OF 6" NP (11) HEADER. SEE NOTE 2.
2. 6" NP (11) HEADER TO BE DEMOLISHED.
3. CLOSE 12" PLUG VALVE PRIOR TO DEMOLITION OF 12" SL (11) HEADER.
4. 12" SL (11) HEADER TO BE DEMOLISHED.
5. 1/2" PW (24) TO BE DEMOLISHED TO HEADER, TYP OF 2.
6. 2" NPW (16) TO BE DEMOLISHED TO HEADER, TYP OF 2.
7. 2" POS (16) AND ALL VALVES AND APPURTENANCES TO BE DEMOLISHED TO HEADER, TYP OF 2.
8. 6" SL (11) AND ALL VALVES AND APPURTENANCES TO BE DEMOLISHED TO HEADER, TYP OF 2.
9. HB-TC-SLP-001 TO BE DEMOLISHED. HB-TC-SLP-002 TO BE SALVAGED AND RETURNED TO OWNER.
10. HB-TC-SLP-009 TO BE DEMOLISHED. SEE NOTE 3.
11. 1" PW (24) (UNDERGROUND) AND FIELD-ROUTED SEAL WATER DRAIN TO BE DEMOLISHED.
12. CLOSE 8" PLUG VALVE PRIOR TO DEMOLITION OF BELOW-GRADE 6" SL (11).
13. 6" SL (11) AND ALL VALVES AND APPURTENANCES TO BE DEMOLISHED TO 6"x8" REDUCER. 6" SL (11) BELOW GRADE PIPE IS CONCRETE ENCASED ACCORDING TO RECORD DRAWINGS.
14. ABOVE-GRADE NPW PIPE (VARIOUS SIZES) TO BE DEMOLISHED. SEE NOTE 5.
15. HB-TC-NP-001 TO REMAIN.
16. HB-TC-NP-002 AND HB-TC-NP-003 TO BE DEMOLISHED AND REPLACED IN KIND PER SECTION 11216 – VERTICAL TURBINE PUMPS – WET PIT.
17. DEMOLISH EXISTING 8" VALVE. REPLACE EXISTING CONTROL VALVE IN KIND WITH 120V SOLENOIDS.
18. DEMOLISH EXISTING HOSE BIB.
19. SEAL NPW PIPE PENETRATIONS PER DETAIL 2/A-4.
20. SEAL NPW PIPE PENETRATION PER DETAIL 1/A-4.
21. DEMOLISH 12" S (11) AND (2) 12" VALVES UP TO 12" TEE IN PIPE TRENCH. REFER TO SECTION 01015 – CONSTRUCTION COORDINATION AND SEQUENCING FOR DURATION AND TIMING RESTRAINTS.

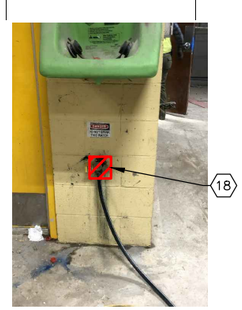

1 EXISTING PW HOSE BIB

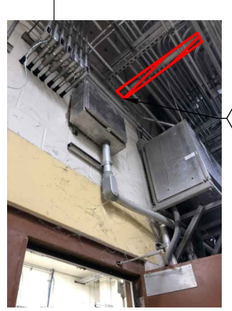

2 NPW PIPE PENETRATION

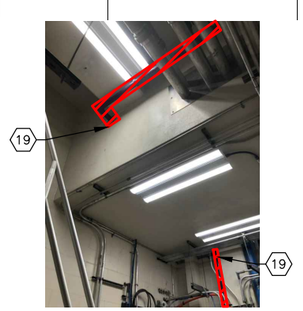

3 NPW PIPE PENETRATION

4 NPW PIPE PENETRATION

NOTES:

1. ALL DEMOLITION WORK IS TO BE COORDINATED WITH PLANT OPERATION STAFF PER APPROVED SEQUENCE OF CONSTRUCTION (SEE SECTION 01015 – SEQUENCE OF CONSTRUCTION). COORDINATE WITH OWNER PRIOR TO DEMOLITION TO CONFIRM ALL ITEMS TO BE SALVAGED AND RETURNED TO OWNER. STRUCTURAL DEMOLITION WORK SHALL BE PER SECTION 03740 – CONCRETE REPAIR AND MODIFICATIONS AND IS SHOWN ON S-3, S-4, AND S-5.
2. COORDINATE 6" NPW (11) HEADER SHUTDOWN WITH PLANT STAFF. IF NPW IS NECESSARY DURING SHUTDOWN, CONTRACTOR SHALL PROVIDE AT NO ADDITIONAL COST TO THE OWNER.
3. PER THE COA'S LEAD BASE PAINT SURVEY REPORTS, THE LEAD BASE PAINT SAMPLES COLLECTED AND ANALYZED FROM THE PUMPING EQUIPMENT AND ASSOCIATED PIPES, THERMAL PIPE INSULATION; AND PAINTED METAL GAS LINES THAT RUNS ALONG THE INTERIOR WALLS NEAR THE CEILING ARE ALL BELOW THE US EPA HUD GUIDELINES FOR LEAD BASE PAINT. PROPER WORK PRACTICES AND PPE IS REQUIRED WHERE ANY CUTTING AND OR SAWING TAKES PLACE.
4. PER THE COA'S ASBESTOS SURVEY REPORTS, THERE IS "NO ASBESTOS DETECTED" (NAD) IN THE AREAS OF THE BUILDING WHERE THE PROJECTED WORK WILL BE UPGRADED. NO ASBESTOS WAS DETECTED IN THE WINDOWS CAULK, CMU WALLS, PUMPS, ACCESSIBLE PUMPS GASKETS AND ALL ASSOCIATED PIPING AND INSULATION. NO FILL MATERIAL WAS DISCOVERED IN THE AREAS WHERE THE CMU WILL BE REPAIRED/REPLACED OR REMOVED.
5. ALL EXISTING NPW PIPE AND SUPPORTS LOCATED ABOVE-GRADE TO BE DEMOLISHED. SEE M-3 FOR APPROXIMATE LENGTH OF PIPE ALONG WALL NEAR CEILING. ALL EXISTING NPW PIPE (APPROXIMATELY 100 LF) LOCATED IN THE EAST ELECTRICAL ROOM TO BE DEMOLISHED.
6. ALL EXISTING 1" PW(11) ABOVE-GRADE PIPE AND SUPPORTS TO BE DEMOLISHED AND REPLACED.

CP&Y, INC.
TBPE FIRM REGISTRATION NO. F-1741

NO.	REVISION	BY	DATE

VERIFY SCALE 0 1" BAR IS ONE INCH ON ORIGINAL DRAWING. IF NOT ONE INCH ON THIS SHEET, ADJUST SCALE

CITY OF AUSTIN – AUSTIN WATER
HORNSBY BEND BMP CENTRIFUGES

MECHANICAL DEMOLITION PLAN I

Date:	MAY 2021
Designed:	P.VILLARREAL
Drawn:	S.MEDINA
Reviewed:	K.BACKHAUS
CP&Y Proj.	AUST1600646.01

SHEET
M-2

REFERENCES: AUST1600646.01_Border_Base.dwg _Std ENVIRO SEALS.dwg AUST1600646.01_E_ABase.dwg AUST1600646.01_E_SBase.dwg AUST1600646.01_E_MBase
Jun 02, 2021 – 8:16am C:\pwworking\cpy\pw_cpy\pvillarreal\d0795251\AUST1600646.01_S_M-2_&_M-3_CPY.dwg

1 SOUTH WALL LOW NPW PIPING

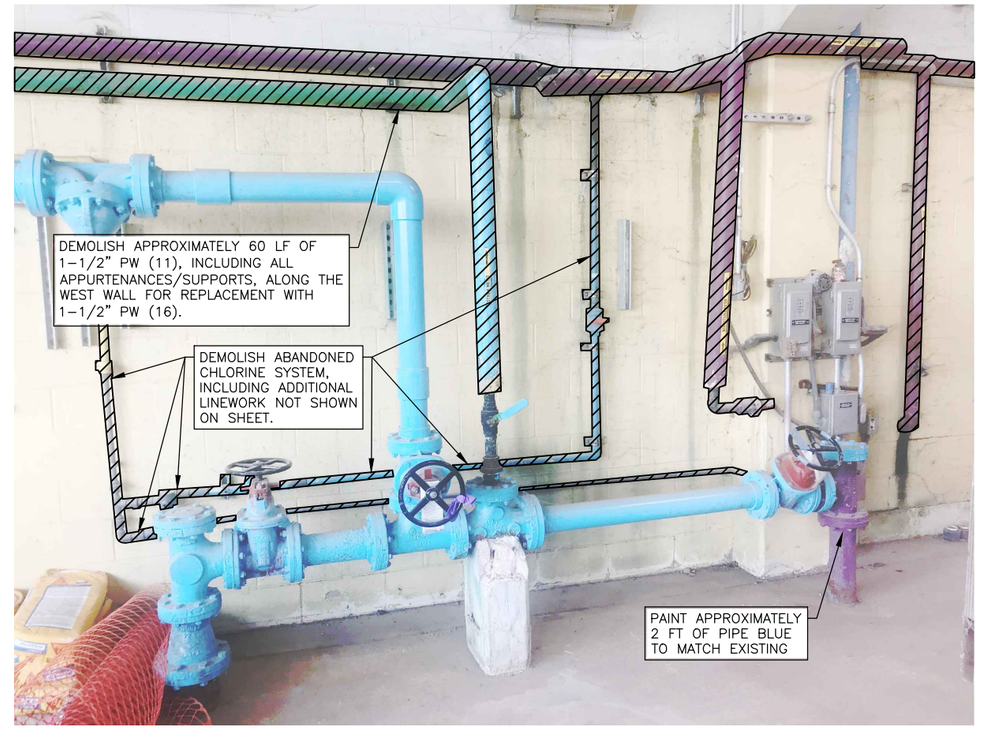

2 SOUTHWEST WALL NPW AND PW PIPING

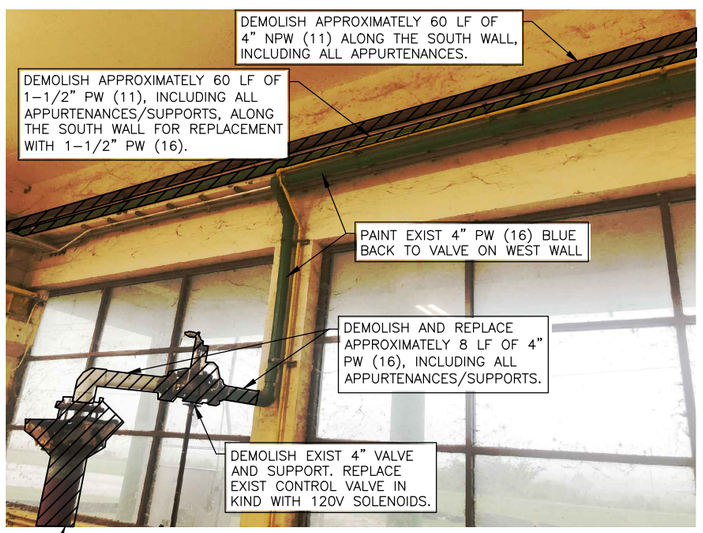

3 SOUTH WALL HIGH NPW PIPING

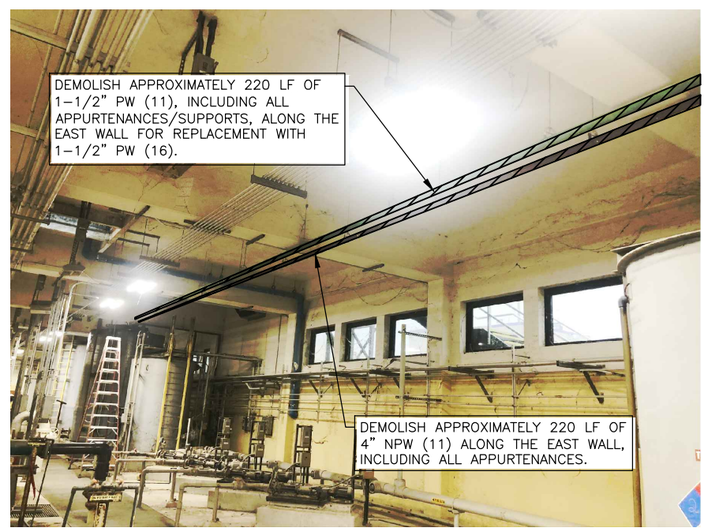

4 EAST WALL HIGH NPW PIPING

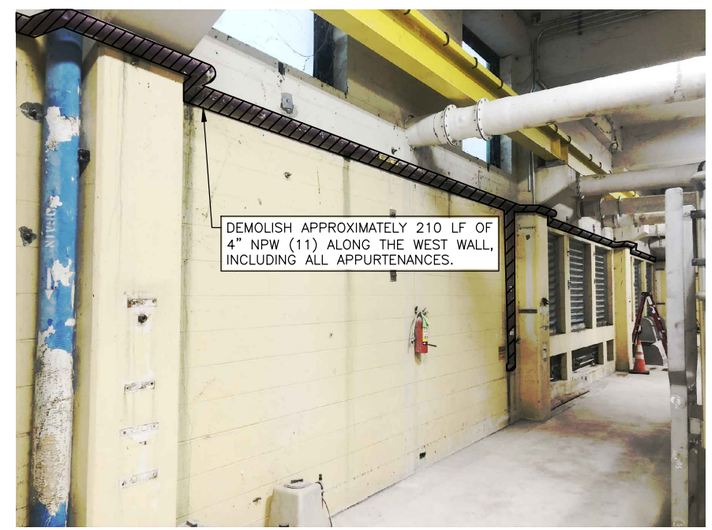

5 WEST WALL HIGH NPW PIPING

NOTES:

1. PER THE COA'S LEAD BASE PAINT SURVEY REPORTS, THE LEAD BASE PAINT SAMPLES COLLECTED AND ANALYZED FROM THE PUMPING EQUIPMENT AND ASSOCIATED PIPES, THERMAL PIPE INSULATION; AND PAINTED METAL GAS LINES THAT RUNS ALONG THE INTERIOR WALLS NEAR THE CEILING ARE ALL BELOW THE US EPA HUD GUIDELINES FOR LEAD BASE PAINT. PROPER WORK PRACTICES AND PPE IS REQUIRED WHERE ANY CUTTING AND OR SAWING TAKES PLACE.
2. PER THE COA'S ASBESTOS SURVEY REPORTS, THERE IS "NO ASBESTOS DETECTED" (NAD) IN THE AREAS OF THE BUILDING WHERE THE PROJECTED WORK WILL BE UPGRADED. NO ASBESTOS WAS DETECTED IN THE WINDOWS CAULK, CMU WALLS, PUMPS, ACCESSIBLE PUMPS GASKETS AND ALL ASSOCIATED PIPING AND INSULATION. NO FILL MATERIAL WAS DISCOVERED IN THE AREAS WHERE THE CMU WILL BE REPAIRED/REPLACED OR REMOVED.

CP&Y, INC.
TBPE FIRM REGISTRATION NO. F-1741

CITY OF AUSTIN

STATE OF TEXAS
KATELYN R. BACKHAUS
135285
LICENSED
PROFESSIONAL ENGINEER
5/26/2021

NO.	REVISION	BY	DATE

VERIFY SCALE 0 1"
BAR IS ONE INCH ON ORIGINAL DRAWING. IF NOT ONE INCH ON THIS SHEET, ADJUST SCALE

CITY OF AUSTIN – AUSTIN WATER
HORNSBY BEND BMP CENTRIFUGES

MECHANICAL DEMOLITION PLAN II

Date: MAY 2021
Designed: P.VILLARREAL
Drawn: S.MEDINA
Reviewed: K.BACKHAUS
CP&Y Proj. AUST1600646.01

SHEET
M-3

REFERENCES: AUST1600646.01_Border_Base.dwg _Std ENVIRO SEALS.dwg AUST1600646.01_E_ABase.dwg AUST1600646.01_E_SBase.dwg AUST1600646.01_E_MBase
Jun 02, 2021 – 8:15am C:\pwworking\cpy\pw_cpy\pvillarreal\d0795251\AUST1600646.01_S_M-2_&_M-3_CPY.dwg

NOTES:
1. CONTRACTOR SHALL VERIFY LOCATIONS OF EXISTING UTILITIES PRIOR TO COMMENCING WORK.
2. ALL EXISTING DUCTILE IRON PIPING BELOW FLOOR IS CONCRETE ENCASED.
3. EXCAVATIONS ADJACENT TO BUILDING STRUCTURES AND FOUNDATIONS WILL REQUIRE SPECIAL SHORING PER SP509S.
4. EXISTING 16" F (11) AND 12" D (11) NOT SHOWN IN PROFILE FOR CLARITY.
5. REFER TO STRUCTURAL DRAWINGS FOR GBT TRENCH DEMOLITION AND CENTRIFUGE DISCHARGE ACCESS TRENCH INSTALLATION DETAILS.
6. COORDINATE WITH PLANT STAFF TEMPORARY CENTRIFUGE SHUTDOWN FOR CENTRATE CONNECTION TO DRAIN.
7. CENTRIFUGE PLATFORMS AND ODOR EXHAUST DUCTWORK NOT SHOWN FOR CLARITY.
8. IT IS THE RESPONSIBILITY OF THE CONTRACTOR TO VERIFY THE DIMENSIONS LOCATING THE DRAIN CONNECTIONS TO THE CENTRIFUGES.
9. CONTRACTOR SHALL PROVIDE CENTRATE AND DRAIN BYPASS FOR EXISTING CENTRIFUGES AND DRAINS DURING THE TIE-IN TO 12" D (17). SUBMIT BYPASS PLANS TO OWNER/ENGINEER FOR REVIEW.
10. EXIST 12" D (11) LINE SHALL HAVE DRAIN CONNECTIONS PLUGGED WITH A PERMANENT GROUT PLUG.

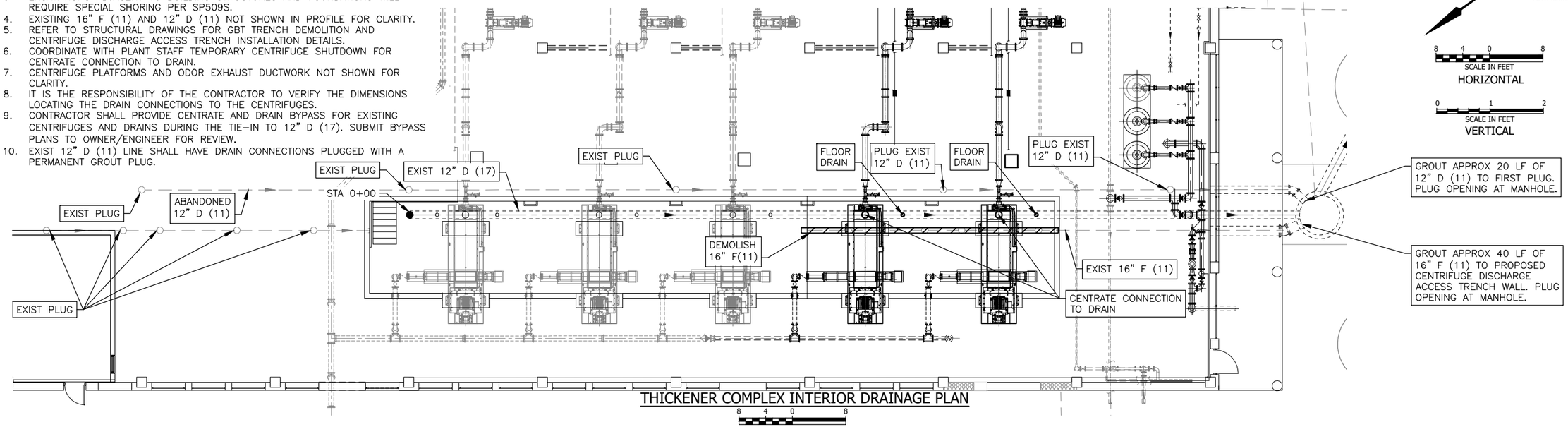

THICKENER COMPLEX INTERIOR DRAINAGE PLAN

SCALE IN FEET 8 4 0 8

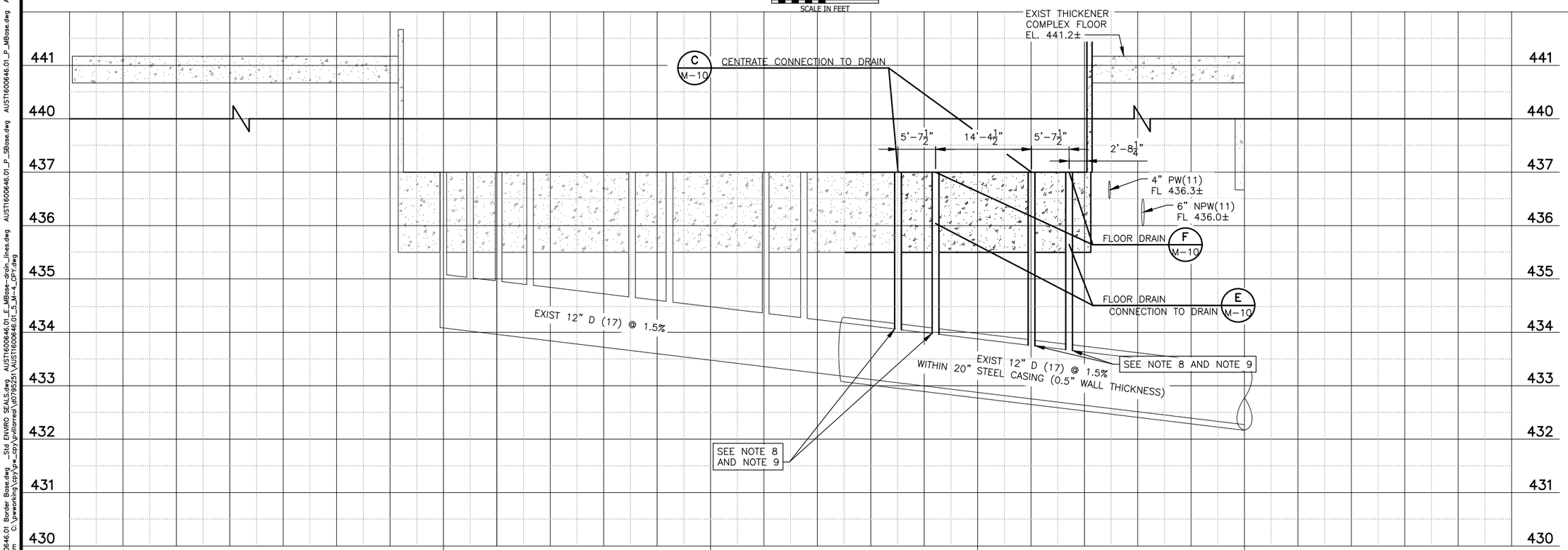

THICKENER COMPLEX INTERIOR DRAINAGE PROFILE

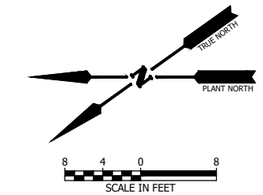

CP&Y, INC.
TBPE FIRM REGISTRATION NO. F-1741

CITY OF AUSTIN EST. 1839 FOUNDED

STATE OF TEXAS
KATELYN R. BACKHAUS
135285
LICENSED PROFESSIONAL ENGINEER
5/26/2021

NO.	REVISION	BY	DATE

VERIFY SCALE 0 1"
BAR IS ONE INCH ON ORIGINAL DRAWING. IF NOT ONE INCH ON THIS SHEET, ADJUST SCALE

CITY OF AUSTIN – AUSTIN WATER
HORNSBY BEND BMP CENTRIFUGES

THICKENER COMPLEX INTERIOR DRAINAGE PLAN

Date: MAY 2021
Designed: P.VILLARREAL
Drawn: S.MEDINA
Reviewed: K.BACKHAUS
CP&Y Proj: AUST1600646.01

SHEET
M-4

REFERENCES: AUST1600646.01 Border Base.dwg _Std ENVIRO SEALS.dwg AUST1600646.01_E_MBase-drain_lines.dwg AUST1600646.01_P_SBase.dwg AUST1600646.01_P_JBase.dwg AUST1600646.01_E_ABase
May 24, 2021 – 12:20pm C:\pwworking\cpy\pw_cpy\pvillarreal\d0795251\AUST1600646.01_5_M-4_CPY.dwg

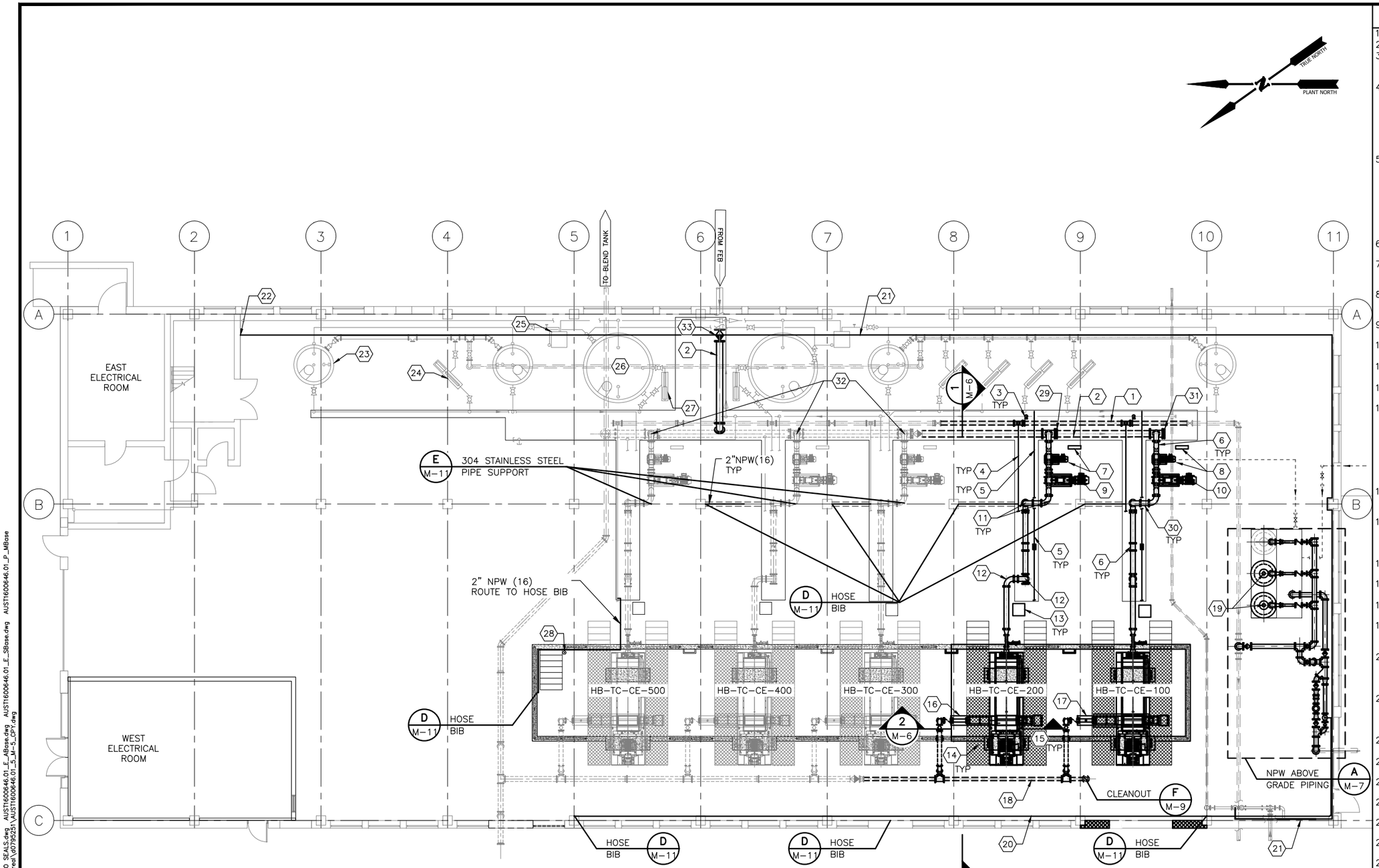

NOTES:

1. FRP 3.5-FT WIDE CENTRIFUGE PLATFORMS, STAIRS, LADDERS, GATES, AND ALL APPURTENANCES SHALL EXACTLY MATCH THE CONFIGURATION OF THE EXISTING FRP PLATFORMS. SEE S-6, SECTION 11361 – CENTRIFUGE THICKENING EQUIPMENT, AND SECTION 06500 – FIBERGLASS REINFORCED PLASTICS AND FABRICATIONS FOR PLATFORM REQUIREMENTS.
2. SOME PIPING, FITTINGS, VALVES AND APPURTENANCES NOT SHOWN FOR CLARITY. SEE M-4 FOR DRAINS AND DRAIN LINE CONFIGURATION.
3. SMALL DIAMETER LINE ROUTING NOT SHOWN FOR CLARITY. FIELD ROUTE AND MATCH TIE IN LOCATIONS TO THE EXISTING THICKENING TRAINS. IF SMALL DIAMETER LINES ARE NOT TO BE REUSED, CONTRACTOR SHALL CAP LINES AT THEIR HEADER IN THE EXISTING THICKENER COMPLEX PIPE TRENCH.
4. BELOW GRADE PIPE JOINTS SHALL BE FACTORY RESTRAINED. BELOW GRADE FITTINGS SHALL BE MECHANICAL JOINT WITH RESTRAINTS UNLESS OTHERWISE NOTED.
5. CONTRACTOR TO REFER TO SECTION 01015 – SEQUENCE OF CONSTRUCTION AND SECTION 01016 – TEMPORARY THICKENING AND BYPASS PUMPING FOR SEQUENCING REQUIREMENTS.
6. ALL DUCTILE IRON PIPE BELOW FLOOR SLAB SHALL BE CONCRETE ENCASED AND COATED WITH A LINING MATERIAL PER WASTEWATER REQUIREMENTS FOR DUCTILE IRON PIPE FOUND IN CITY STANDARD SPECIFICATION 510 AND SPL WW-534.
7. ODOR EXHAUST FRP DUCT NOT SHOWN FOR CLARITY. COORDINATE WITH ODOR EXHAUST SHEETS.
8. REFER TO M-11 FOR NPW PIPE SUPPORTS DETAILS.
9. APPROXIMATE HIGH WALL NPW AND PW PIPE HORIZONTAL ROUTING SHOWN IN PLAN VIEW. PIPE SHALL BE ROUTED DOWN COLUMNS/WALLS TO SERVE NECESSARY APPURTENANCES INDICATED. CONTRACTOR SHALL SUBMIT PROPOSED ROUTING PRIOR TO ORDERING PIPE.
10. REROUTE EXISTING OIL LUBRICATION LINES IN THIS AREA AS REQUIRED AT CENTRIFUGES 300, 400, AND 500 TO AVOID CONFLICT WITH NEW GUARDRAIL, AT NO ADDITIONAL COST TO THE OWNER. REFER TO AND COORDINATE WITH STRUCTURAL FOR GUARDRAIL LOCATIONS.

NOTES BY SYMBOL (X)

1. PROP 6" NP (11) HEADER.
2. PROP 12" SL (11).
3. PROP 1/2" PW (16) STUB WITH BALL VALVE AND CAP IN EXISTING TRENCH.
4. PROP 2" NPW (16) TO BE ROUTED TO COLUMN HOSE BIB, OIL-LUBRICATION UNIT, CENTRIFUGE MANIFOLD, AND ALL NECESSARY LOCATIONS. ROUTE SIMILARLY TO EXISTING CENTRIFUGE TRAINS, TYP OF 2.
5. PROP 2" POS (16) TO BE ROUTED TO NECESSARY LOCATIONS, TYP OF 2. INSTALL POLYMER METER (PER SECTION 17520 – INSTRUMENTATION) IN IDENTICAL LOCATION OF EXISTING POLYMER METERS ON CENTRIFUGES 3, 4 & 5.
6. PROP 8" SL (11), AND 8" FLOW METER TYP OF 2.
7. PROP MACERATOR NO. 2, HB-TC-MRT-200 AND CONTROL PANEL.
8. PROP MACERATOR NO. 1, HB-TC-MRT-100 AND CONTROL PANEL.
9. PROP FEED PUMP NO. 2, HB-TC-SLP-200
10. PROP FEED PUMP NO. 1, HB-TC-SLP-100
11. PROP 8" FLANGED LONG RADIUS 90 DEG BEND, TYP OF 4.
12. PROP 8" FLANGED LONG RADIUS 90 DEG BEND.
13. PROP OIL LUBRICATION SYSTEM, TYP OF 2. CONNECT NPW TO UNIT WITH MCMASTER-CARR MEDIUM-PRESSURE STAINLESS STEEL Y-STRAINER (PART NUMBER 4745K353) TO MATCH THE CONFIGURATION OF THE EXISTING UNITS.
14. PROP FRP CENTRIFUGE ACCESS WALKWAY, TYP OF 4. SEE NOTE 1.
15. EASY POND PANEL MOUNTED BETWEEN ODOR CONTROL DUCT SUPPORTS, 4' ABOVE PLATFORM.
16. PROP DISCHARGE PUMP NO. 2, HB-TC-SLP-201.
17. PROP DISCHARGE PUMP NO. 1, HB-TC-SLP-101.
18. PROP 6" SL (11) HEADER. SEE NOTE 7.
19. PROP NPW PUMPS HB-TC-NP-002 AND HB-TC-NP-003.
20. 2" NPW (16) WITH SUPPORTS AS REQUIRED IN SECTION 15140 – SUPPORTS AND HANGERS.
21. 1-1/2" PW (16) OVERHEAD WITH SUPPORTS AS REQUIRED IN SECTION 15140 – SUPPORTS AND HANGERS.
22. CONNECT NEW 1-1/2" PW (16) TO EXISTING 1-1/2" PW.
23. EXIST POLYMER AGING TANK, TYP OF 4.
24. EXIST POLYMER METERING PUMP, TYP OF 5.
25. EXIST POLYMER MIXING UNIT, TYP OF 2.
26. EXIST POLYMER STORAGE TANK, TYP OF 2.
27. EXIST POLYMER RECIRCULATION PUMP, TYP OF 2.
28. EXIST CENTRIFUGE DISCHARGE ACCESS TRENCH HIGH LEVEL SWITCH.
29. PROP SMITH-BLAIR FLANGE-LOCK RESTRAINED FCA MODEL 911 ADAPTOR, 12-INCH.
30. SAMPLE PORT ON SPOOL PIECE TO MATCH EXISTING SPOOL PIECES, TYP OF 2.
31. 12-INCH DI BLIND FLANGE.
32. INSTALL ELECTRIC ACTUATOR ON EXISTING 8" PLUG VALVE PER SECTION 15204 – ELECTRIC VALVE OPERATORS. REFER TO SECTION 11361 – CENTRIFUGE THICKENING EQUIPMENT FOR CONTROL REQUIREMENTS.
33. PROP 12" PLUG VALVE.

CP&Y, INC.
TBPE FIRM REGISTRATION NO. F-1741

CITY OF AUSTIN

STATE OF TEXAS
KATELYN R. BACKHAUS
135285
LICENSED PROFESSIONAL ENGINEER
5/26/2021

NO.	REVISION	BY	DATE

VERIFY SCALE 0 1"
BAR IS ONE INCH ON ORIGINAL DRAWING. IF NOT ONE INCH ON THIS SHEET, ADJUST SCALE

CITY OF AUSTIN – AUSTIN WATER
HORNSBY BEND BMP CENTRIFUGES

MECHANICAL PLAN

Date: MAY 2021
Designed: P.VILLARREAL
Drawn: S.MEDINA
Reviewed: K.BACKHAUS
CP&Y Proj. AUST1600646.01

SHEET
M-5

REFERENCES: AUST1600646.01_Border_Base.dwg _Std ENVIRO SEALS.dwg AUST1600646.01_E_ABase.dwg AUST1600646.01_E_SBase.dwg AUST1600646.01_P_MBase
May 24, 2021 – 12:21pm C:\pwworking\cpy\pw_cpy\pvillarreal\d0795251\AUST1600646.01_5_M-5_CPY.dwg

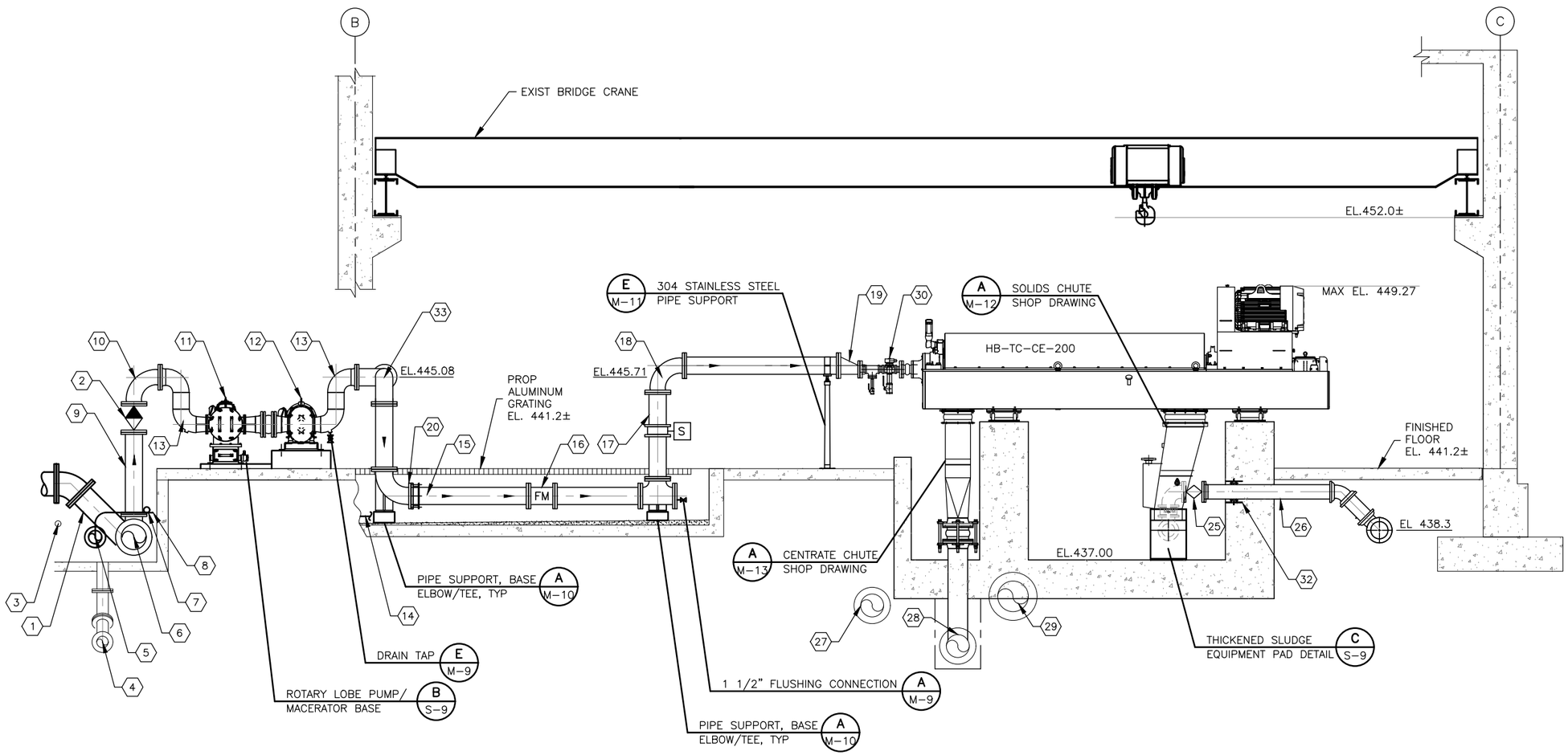

1 M-5 SECTION

2 1 0 4
SCALE IN FEET

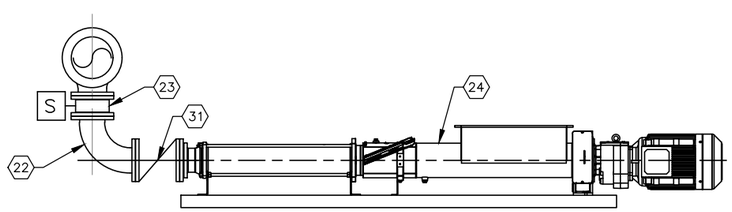

2 M-5 SECTION

2 1 0 2
SCALE IN FEET

NOTES BY SYMBOL (X)

1. EXIST 12" SL (11), BEYOND
2. PROP 8" PLUG VALVE WITH ELECTRIC VALVE OPERATOR PER SECTION 15204 – ELECTRIC VALVE OPERATORS
3. EXIST 2" POS (16)
4. EXIST 6" D (11)
5. PROP 6" NPW (11)
6. PROP 12" SL (11)
7. PROP 3" PW (16)
8. PROP 2" NPW (16)
9. PROP 8" SL (11)
10. PROP 8" 90° FLANGED DI LONG RADIUS ELBOW
11. PROP MACERATOR HB-TC-MRT-200
12. PROP THICKENER FEED PUMP HB-TC-SLP-200
13. FABRICATED GOOSENECK FLANGE
14. PROP 2" NPW (16)
15. PROP 8" SL (11)
16. PROP ELECTROMAGNETIC FLOW METER
17. PROP MICROWAVE DENSITY METER
18. PROP 8" 90° FLANED DI LONG RADIUS ELBOW
19. PROP 8"x4" FLANGED ECCENTRIC REDUCER
20. PROP SMITH-BLAIR FLANGE-LOCK RESTRAINED FCA MODEL 911 ADAPTOR, 8-INCH.
21. NOT USED
22. PROP 6" FLANGED NORMAL RADIUS 90° BEND WITH 1-1/2" NPW THREADED TAP IN "Y" POSITION
23. PROP 6" MICROWAVE DENSITY METER
24. PROP DISCHARGE PUMP HB-TC-SLP-201
25. PROP 6" FLANGED PLUG VALVE
26. PROP 6" SL (11)
27. EXIST 12" D (11) TO BE ABANDONED
28. PROP 12" D (17)
29. EXIST 16" F (11) TO BE DEMOLISHED
30. ANDRITZ 4" MANIFOLD
31. PROP 6" FLANGED CHECK VALVE
32. WALL RING AND LINK SEAL FOR 6" SL (11)
33. 304 STAINLESS STEEL PIPE SUPPORT ON HORIZONTAL BEND PER DETAIL E/M-11.

NOTES:

1. FOR STRUCTURAL WORK RELATED TO THE CENTRIFUGE DISCHARGE ACCESS TRENCH, SEE STRUCTURAL SHEETS.
2. SOME PIPING, FITTINGS, VALVES AND APPURTENANCES NOT SHOWN FOR CLARITY.
3. SMALL DIAMETER LINES NOT SHOWN FOR CLARITY. FIELD ROUTE PER SPECIFICATIONS AND COORDINATE WITH MANUFACTURERS FOR TIE-IN LOCATIONS.
4. BELOW GRADE PIPE JOINTS SHALL BE FACTORY RESTRAINED. BELOW GRADE FITTINGS SHALL BE MECHANICAL JOINT WITH RESTRAINTS UNLESS OTHERWISE NOTED.
5. FRP PLATFORMS NOT SHOWN FOR CLARITY.
6. ALL DUCTILE IRON PIPE BELOW FLOOR SLAB SHALL BE CONCRETE ENCASED AND COATED WITH A LINING MATERIAL PER WASTEWATER REQUIREMENTS FOR DUCTILE IRON PIPE FOUND IN CITY STANDARD SPECIFICATION 510 AND SPL WW-534.
7. ODOR EXHAUST FRP DUCT NOT SHOWN FOR CLARITY. COORDINATE WITH ODOR EXHAUST SHEETS.

CP&Y, INC.
TBPE FIRM REGISTRATION NO. F-1741

CITY OF AUSTIN ESTD. FOUNDED

STATE OF TEXAS KATELYN R. BACKHAUS 135285 LICENSED PROFESSIONAL ENGINEER 5/26/2021

NO.	REVISION	BY	DATE

VERIFY SCALE 0 1"
BAR IS ONE INCH ON ORIGINAL DRAWING. IF NOT ONE INCH ON THIS SHEET, ADJUST SCALE

CITY OF AUSTIN – AUSTIN WATER
HORNSBY BEND BMP CENTRIFUGES

MECHANICAL SECTION

Date:	MAY 2021
Designed:	P.VILLARREAL
Drawn:	S.MEDINA
Reviewed:	K.BACKHAUS
CP&Y Proj:	AUST1600646.01

SHEET
M-6

REFERENCES: AUST1600646.01 Border Base.dwg _Std ENVIRO SEALS.dwg AUST1600646.01_P_MBase.dwg AUST1600646.01_Border_Base
May 24, 2021 – 12:21pm C:\pwworking\cpy\pw_cpy\pvillarreal\d0795251\AUST1600646.01_5_M-6_to_M-8_CPY.dwg

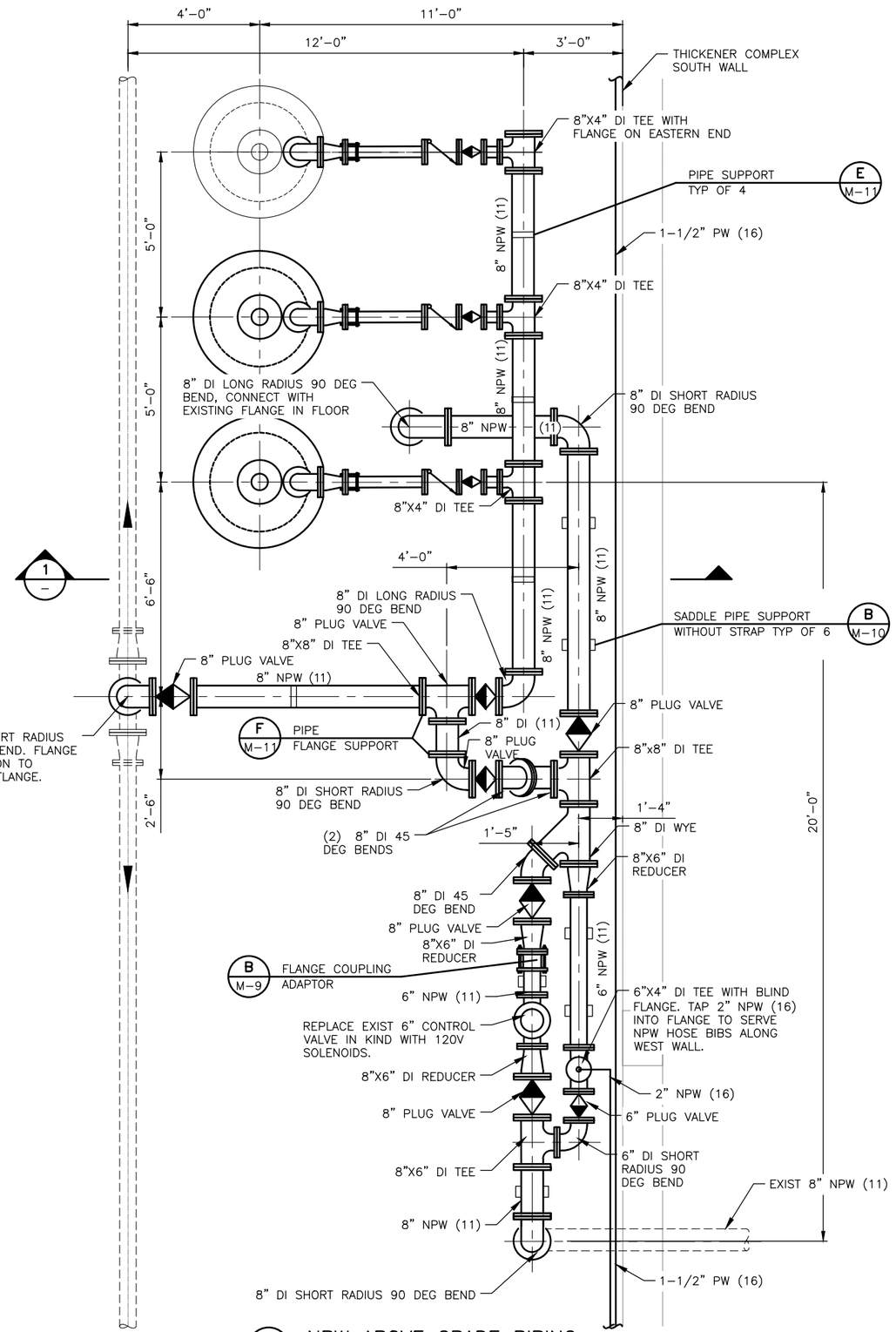

A M-5 NPW ABOVE GRADE PIPING
NTS

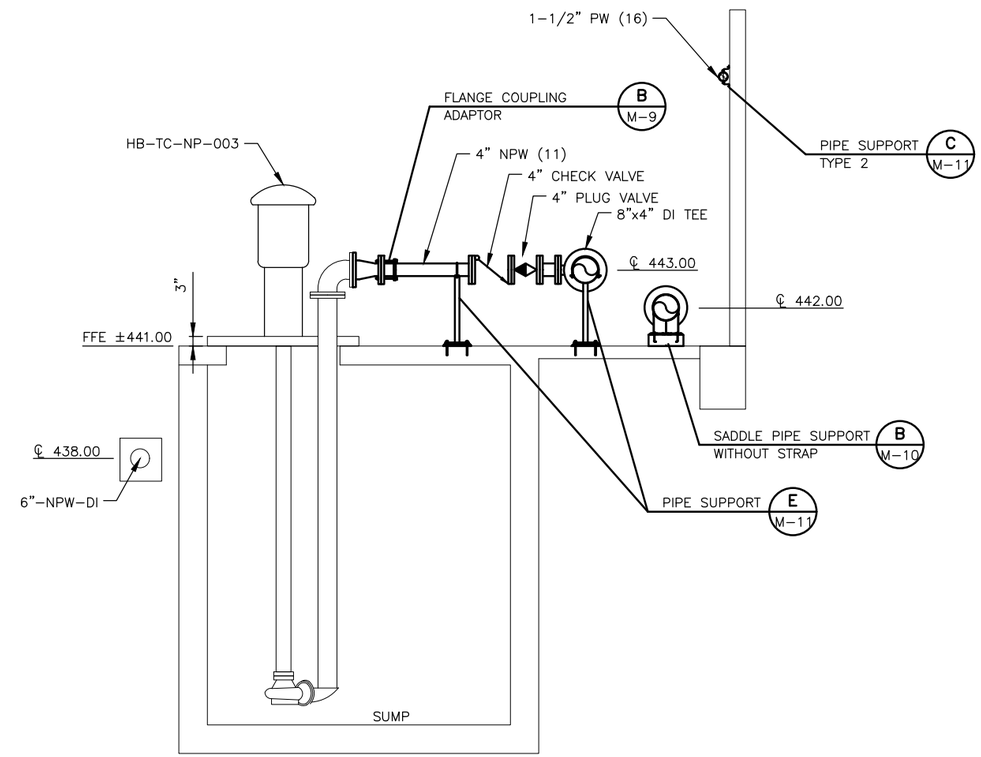

1 SECTION
NTS

NOTES:

1. ALL ABOVE-GRADE DI PIPE SHALL HAVE FLANGED FITTINGS.

CP&Y, INC.
TBPE FIRM REGISTRATION NO. F-1741

CITY OF AUSTIN ESTD. FOUNDED

STATE OF TEXAS
KATELYN R. BACKHAUS
135285
LICENSED PROFESSIONAL ENGINEER
Katelyn R. Backhaus 5/26/2021

NO.	REVISION	BY	DATE

VERIFY SCALE 0 1"
BAR IS ONE INCH ON ORIGINAL DRAWING. IF NOT ONE INCH ON THIS SHEET, ADJUST SCALE

CITY OF AUSTIN – AUSTIN WATER
HORNSBY BEND BMP CENTRIFUGES

NPW PLAN AND SECTION

Date: MAY 2021
Designed: P.VILLARREAL
Drawn: S.MEDINA
Reviewed: K.BACKHAUS
CP&Y Proj. AUST1600646.01

SHEET
M-7

REFERENCES: AUST1600646.01 Border Base.dwg __Std ENVIRO SEALS.dwg AUST1600646.01_P_MBase.dwg AUST1600646.01_Border_Base
May 24, 2021 – 12:21pm C:\pwworking\cpy\pw_cpy\pvillarreal\d0795251\AUST1600646.01_5_M-6_to_M-8_CPY.dwg

TABLE I – HARNESS RODS										
	PRESSURE=50 psi		PRESSURE=100 psi		PRESSURE=150 psi		PRESSURE=200 psi		PRESSURE=250 psi	
PIPE SIZE (inch)	NO. RODS	SIZE RODS	NO. RODS	SIZE RODS	NO. RODS	SIZE RODS	NO. RODS	SIZE RODS	NO. RODS	SIZE RODS
3	4	5/8	4	5/8	4	5/8	4	5/8	4	5/8
4	4	5/8	4	5/8	4	5/8	4	5/8	4	5/8
6	4	5/8	4	5/8	4	5/8	4	5/8	4	5/8
8	4	5/8	4	5/8	4	5/8	4	5/8	4	5/8
10	4	5/8	4	5/8	4	5/8	4	5/8	4	5/8
12	4	5/8	4	5/8	4	3/4	4	3/4	4	3/4
14	4	5/8	4	5/8	4	3/4	4	3/4	4	7/8
16	4	5/8	4	5/8	4	7/8	4	7/8	4	1
18	4	5/8	4	3/4	4	7/8	4	1	4	1
20	4	5/8	4	3/4	4	7/8	4	1	4	1
24	4	5/8	6	3/4	6	7/8	4	1 1/4	4	1 3/8
30	6	3/4	6	1	6	1 1/8	6	1 1/4	6	1 3/8
36	6	7/8	6	1 1/8	6	1 1/4	6	1 1/2	6	1 5/8
42	6	1	6	1 1/4	6	1 1/2	8	1 1/2	8	1 5/8
48	6	1	6	1 3/8	6	1 5/8	8	1 3/4	8	1 3/4
54	6	1 1/8	6	1 1/2	8	1 5/8	8	2	8	2 1/4
60	6	1 1/4	6	1 5/8	8	1 3/4	8	2	8	2 1/4
66	6	1 3/8	6	1 3/4	8	1 3/4	10	2	12	2 1/4
72	6	1 1/2	6	2	10	1 3/4	12	2	14	2 1/4

TABLE II – HARNESS LUGS								
	PRESSURE=100 psi		PRESSURE=150 psi		PRESSURE=200 psi		PRESSURE=250 psi	
PIPE SIZE (inch)	NO. LUGS	LUG THICK. T	NO. LUGS	LUG THICK. T	NO. LUGS	LUG THICK. T	NO. LUGS	LUG THICK. T
3	4	3/8	4	3/8	4	1/2	4	1/2
4	4	1/2	4	1/2	4	3/4	4	3/4
6	4	3/4	4	3/4	4	1	4	1
8	4	3/4	4	1	4	1	4	1
10	4	1	4	1 1/4	4	1	4	1 1/4
12	4	1	4	1 1/4	4	1 1/4	4	1 1/4
14	4	1	4	1 1/4	4	1 1/4	4	1 1/2
16	4	1	4	1 1/4	4	1 1/2	4	1 1/2
18	4	1 1/4	4	1 1/4	4	1 1/2	4	1 3/4
20	4	1 1/4	4	1 1/2	4	1 1/2	4	1 3/4
24	6	1 1/4	6	1 1/2	4	2	4	2 1/4
30	6	1 1/2	6	1 3/4	6	2	6	2 1/4
36	6	1/1/2	6	2	6	2	6	2 1/4

NOTES:

1. DIMENSIONS SHOWN ARE IN INCHES.
2. TEST PRESSURE OF PIPELINES IS 150 PSI.
3. HARNESS RODS SHALL BE INSTALLED BASED ON PIPE SIZE AND TEST PRESSURE OF THE PIPELINE. SPACE HARNESS LUGS EQUALLY AROUND PIPE.
4. STUD BOLTS 5/8" THROUGH 7/8" DIA SHALL HAVE UNC THREADS. STUD BOLTS 1" DIA & LARGER SHALL HAVE EIGHT UNC THREADS PER INCH.
5. STUD MATERIAL SHALL CONFORM TO ASTM A193, GRADE B7.
6. NUTS SHALL CONFORM TO ASTM A194, GRADE 2H.
7. LUG MATERIAL SHALL CONFORM TO ASTM A283, GRADE C OR ASTM A36.
8. DURING INSTALLATION OF THRUST HARNESS, HAND TIGHTEN THE NUT & LOCKNUT GRADUALLY & EQUALLY AT OPPOSITE SIDES UNTIL SNUG TO PREVENT MISALIGNMENT AND ENSURE ALL STUDS CARRY EQUAL LOADS. THEN WRENCH TIGHTEN THE LOCKNUT 1/6 OF COMPLETE TURN. THE THREADS OF THE STUDS SHALL PROTRUDE A MINIMUM OF 1/2" FROM NUT.
9. SPACE REQUIRED NUMBER OF RODS EVENLY ABOUT CENTERLINE OF PIPE. ROD LOCATION MAY BE ROTATED TO ACCOMODATE SPECIFIC REQUIREMENTS.

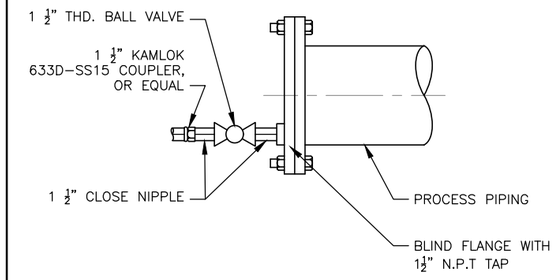

A 1–1/2" FLUSHING CONNECTION
NTS

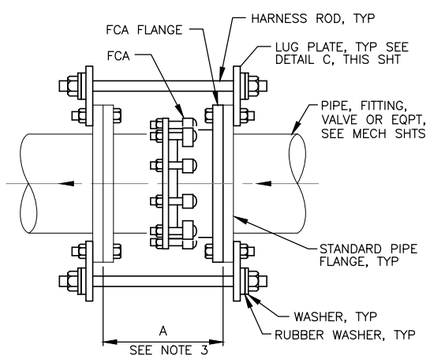

NOTES:

1. FOR NUMBER AND SIZE OF HARNESS RODS, SEE TABLE I, THIS SHEET.
2. FOR LUG PLATE NUMBER, THICKNESS AND SIZE, SEE TABLE II, THIS SHEET.
3. LAY LENGTH "A" EQUALS OVERALL LENGTH OF COUPLING + 2", MINIMUM, FOR EASE OF DISASSEMBLY. REFER TO MANUFACTURER'S INFORMATION FOR COUPLING LENGTH.

B FLANGED COUPLING ADAPTOR W/THRUST HARNESS
NTS

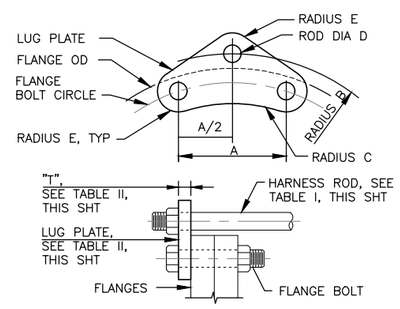

NOTES:

1. ALL DIMENSIONS ARE IN INCHES.
2. DIMENSION "A" AS REQUIRED BY FLANGE SPECIFIED.
3. RADIUS "B" = $\frac{(\text{FLANGE OD})}{2}$ + DIA D + 1/4"
4. RADIUS "C" = $\frac{(\text{FLG BOLT CIRCLE})}{2}$ – RADIUS E
5. DIAMETER "D" = ROD DIAMETER + 1/8"
6. RADIUS "E" = BOLT DIAMETER X 1.25
7. INSTALL HARNESS ROD ASSEMBLIES SUCH THAT ALL RODS ARE EQUALLY SPACED AROUND FLANGE. ON PIPING 20 INCHES AND LARGER, RODS MAY BE GROUPED IN PAIRS BUT GROUPS MUST BE EQUALLY SPACED AROUND FLANGE. THE TOTAL NUMBER OF THE RODS SHALL BE INCREASED ABOVE THAT TABULATED AS NECESSARY TO MEET SPACING REQUIREMENTS.
8. LUG PLATE MAY BE USED TO HARNESS MECHANICAL COUPLING, FLANGED COUPLING ADAPTOR OR EXPANSION JOINT, AS APPLICABLE.

C HARNESSED LUG PLATE
NTS

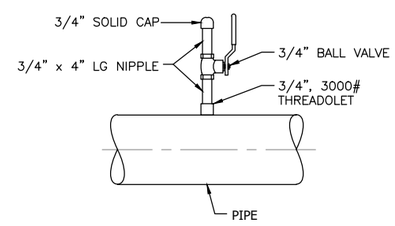

D 3/4" SAMPLE TAP
NTS

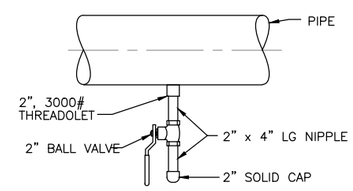

NOTE:
ALL PIPE AND FITTINGS ASSOCIATED WITH DRAIN TAP ARE THREADED, SCH 80, GALVANIZED STEEL.

E 2" DRAIN TAP
NTS

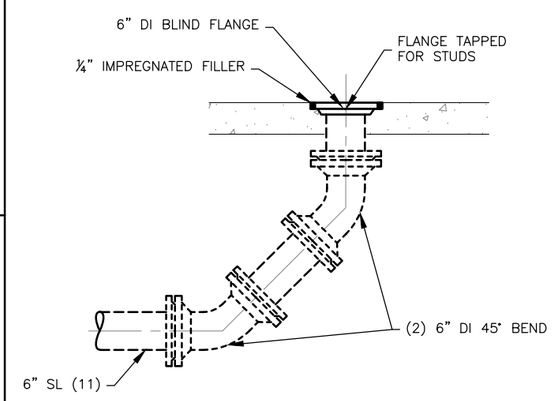

F CLEANOUT
NTS

CP&Y, INC.
TBPE FIRM REGISTRATION NO. F-1741

CITY OF AUSTIN – AUSTIN WATER
HORNSBY BEND BMP CENTRIFUGES

MECHANICAL DETAILS I

NO.	REVISION	BY	DATE

VERIFY SCALE 0 1"
BAR IS ONE INCH ON ORIGINAL DRAWING. IF NOT ONE INCH ON THIS SHEET, ADJUST SCALE

Date: MAY 2021
Designed: P.VILLARRERAL
Drawn: S.MEDINA
Reviewed: K.BACKHAUS
CP&Y Proj: AUST1600646.01

SHEET
M–9

REFERENCES: STD MECH DETAILS.dwg AUST1600646.01 Border Base.dwg _Std ENVIRO SEALS
May 24, 2021 – 12:22pm C:\pwworking\cpy\pw_cpy\pvillarreral\d0795251\AUST1600646.01_5_M-9_&_M-14_CPY.dwg

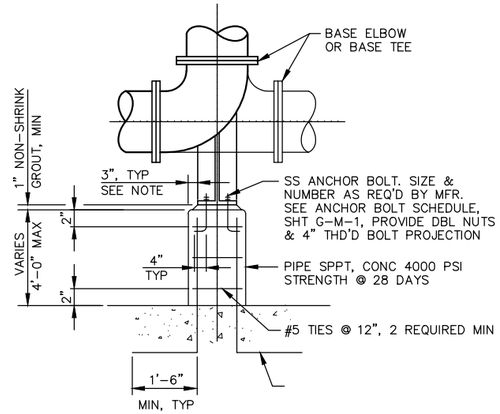

NOTE:
WIDTH & THICKNESS OF PEDESTAL VARIES WITH THE DIMENSIONS OF THE BASE ELBOW, 12" SQ MIN. VERTICAL REBAR WILL INCREASE ACCORDINGLY.

DOWEL SCHEDULE		
MAX. PED. SIZE	QUANITY	SIZE
12" x 12"	4	#5
24" x 24"	8	#6
36" x 36"	16	#7
48" x 48"	20	#8

A PIPE SUPPORT, BASE ELBOW/TEE
NTS

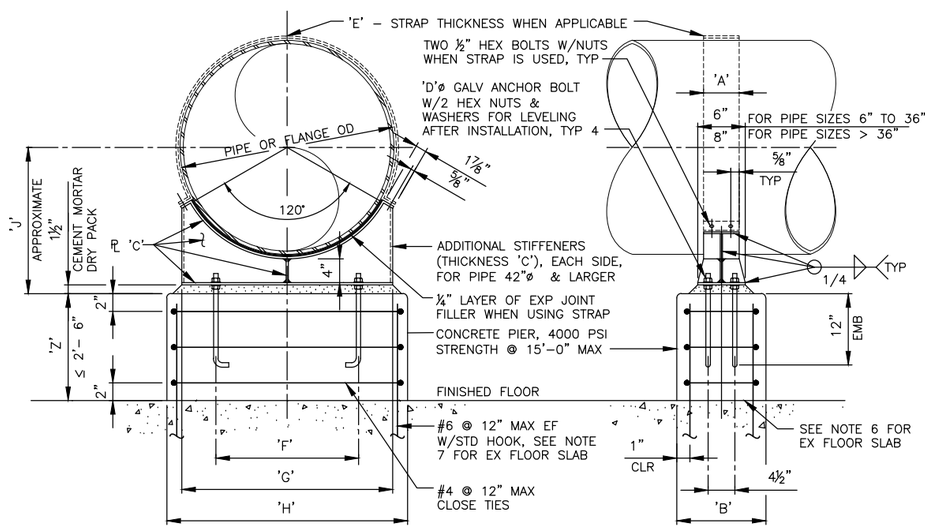

DIMENSIONS IN INCHES													
NOM PIPE SIZE	A	B	C	D	E	SUPPORTING							
						PIPE				FLANGE			
						F	G	H	J	F	G	H	J
6	4	12	3/8	5/8	1/4	4½	9	14	10	7	13	18	13
8	4	12	3/8	5/8	1/4	5	11	16	11	9	15	20	14
10	4	12	3/8	5/8	1/4	6	12	17	12	12	18	23	15
12	4	12	3/8	5/8	1/4	7	14	19	13	13	20	25	16
14	4	12	3/8	5/8	1/4	10	16	21	14	15	22	27	17
16	4	12	3/8	5/8	1/4	12	18	23	15	16	24	29	18
18	4	12	3/8	5/8	1/4	12	20	35	16	17	25	30	19
20	5	12	3/8	5/8	3/8	13	21	26	17	20	28	33	21
22	5	12	3/8	5/8	3/8	15	23	28	18	20	29	34	22
24	5	12	3/8	5/8	3/8	17	25	30	19	21	31	36	23
26	5	12	3/8	3/4	3/8	18	26	31	20	23	33	38	24
30	5	12	3/8	3/4	3/8	22	30	35	22	26	37	42	26
34	5	15	3/8	3/4	3/8	24	33	38	24	28	41	46	29
36	6	15	3/8	3/4	3/8	25	35	40	25	32	44	49	30
42	6	18	1/2	1	3/8	28	40	45	28	36	50	55	33
48	6	18	1/2	1	3/8	31	45	48	31	39	55	60	37
54	6	18	1/2	1	3/8	36	50	55	34	45	61	66	40
60	6	18	1/2	1	3/8	42	56	61	37	51	67	72	44
66	6	18	1/2	1⅛	3/8	43	61	66	40	59	77	82	47
72	6	18	1/2	1⅛	3/8	47	66	71	43	67	79	84	50

NOTES:
1. WHEN SUPPORTING PIPE & FLANGE ALTERNATELY ON SAME LINE, CONCRETE PIERS FOR PIPE SUPPORTS SHALL HAVE SAME DIMENSION 'H' AS FOR FLANGE SUPPORT.
2. GALVANIZE AFTER FABRICATION.
3. WHERE USED UNDER BENDS OR OTHERWISE SKEWED, DIMENSIONS & SADDLE FABRICATION SHALL BE AS ACCEPTABLE TO ENGINEER.
4. IF 'Z' IS 6" OR LESS, OMIT REINFORCING & SIZE ANCHOR BOLTS TO PROJECT 6" MINIMUM INTO FLOOR.
5. PROVIDE ¾" CHAMFER, ALL EDGES OF CONCRETE PIER.
6. CONTRACTOR TO ROUGHEN EXIST FLOOR SLAB AND APPLY BONDING AGENT PRIOR TO CONCRETE PLACEMENT.
7. DRILL #6 DOWELS AT 12" O.C. EF. W/6⅝" MIN EMB. USE "HILTI" HVA ADHESIVE ANCHOR.
8. CONTRACTOR SHALL VERIFY THE EXISTING FLOOR SLAB THICKNESS IS ADEQUATE TO ACCOMMODATE MINIMUM DOWEL EMBEDMENT LENGTH PRIOR TO DRILLING.

B SADDLE PIPE SUPPORT WITH OR WITHOUT STRAP
NTS

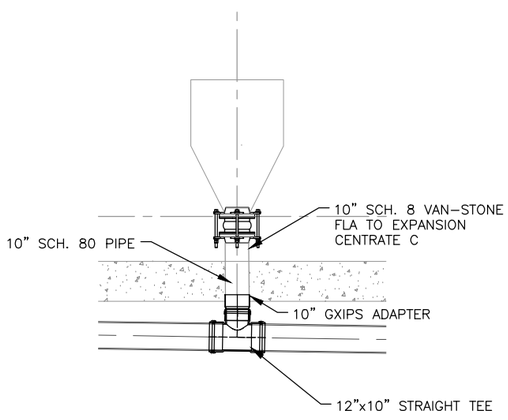

C CENTRATE CONNECTION TO DRAIN
NTS

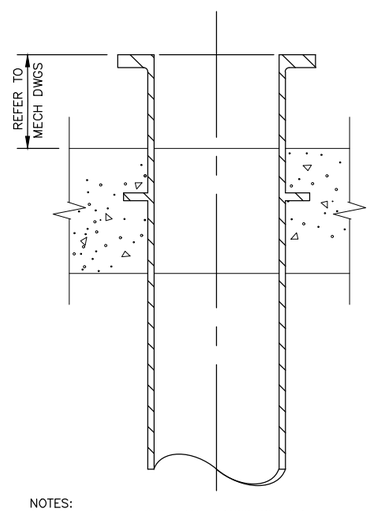

NOTES:
1. REFER TO STRUCTURAL DRAWINGS FOR SLAB THICKNESSES.
2. FLOOR PIPES SHALL BE IN PLACE PRIOR TO PLACING CONCRETE. COAT FLOOR PIPE WITH SPECIFIED COATING SYSTEM PRIOR TO CONCRETE PLACEMENT.

D TYPICAL FLOOR PENETRATION
NTS

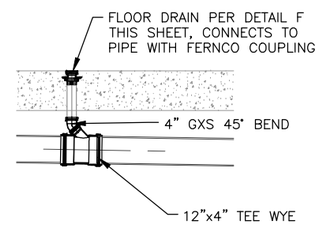

E FLOOR DRAIN CONNECTION TO DRAIN
NTS

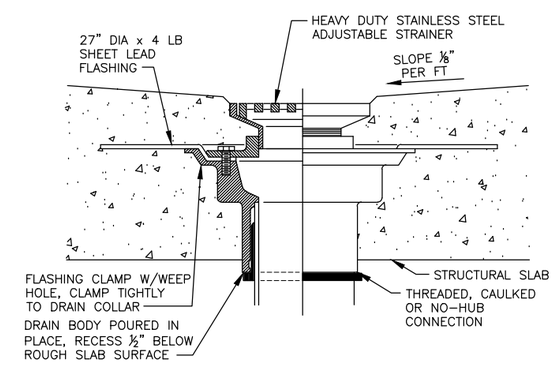

NOTES:
1. PROVIDE FLOOR DRAINS, 4" JOSAM SERIES 30000-E-SS, WITHOUT P-TRAPS UNLESS OTHERWISE NOTED.

F FLOOR DRAIN
NTS

CP&Y, INC.
TBPE FIRM REGISTRATION NO. F-1741

CITY OF AUSTIN
EST. 1839
FOUNDED

STATE OF TEXAS
KATELYN R. BACKHAUS
135285
LICENSED
PROFESSIONAL ENGINEER
Katelyn R. Backhaus 5/26/2021

NO.	REVISION	BY	DATE

VERIFY SCALE 0 1"
BAR IS ONE INCH ON ORIGINAL DRAWING. IF NOT ONE INCH ON THIS SHEET, ADJUST SCALE

CITY OF AUSTIN – AUSTIN WATER
HORNSBY BEND BMP CENTRIFUGES

MECHANICAL DETAILS II

Date:	MAY 2021
Designed:	P.VILLARREAL
Drawn:	S.MEDINA
Reviewed:	K.BACKHAUS
CP&Y Proj.	AUST1600646.01

SHEET
M-10

REFERENCES: STD MECH DETAILS.dwg AUST1600646.01 Border Base.dwg Std ENVIRO SEALS
May 24, 2021 – 12:22pm C:\pwworking\cpy\pw_cpy\pvillarreal\d0795251\AUST1600646.01_5_M-9_&_M-14_CPY.dwg

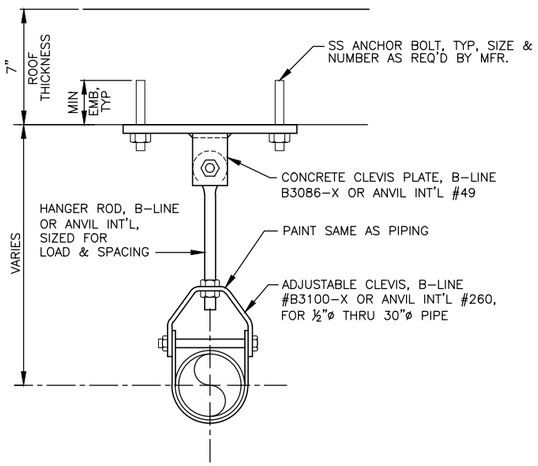

NOTES:
1. USE BEAM CLAMPS FOR STEEL BEAM APPLICATIONS.
2. SUPPORT SPACING PER MANUFACTURER'S RECOMMENDATIONS.

A PIPE HANGER
NTS

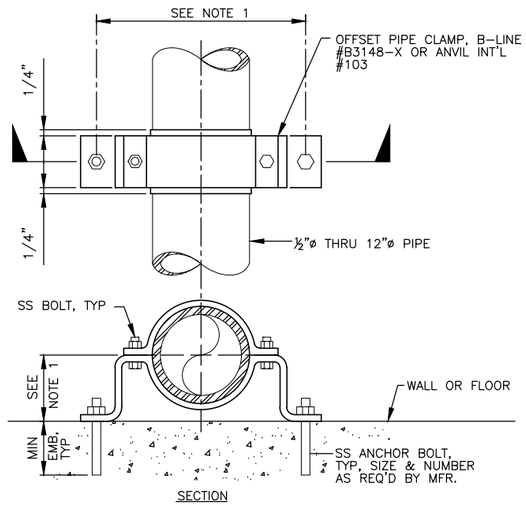

NOTES:

1. REFER TO MANUFACTURER'S DATA FOR DIMENSION.
2. SUPPORT SPACING:
   - 7'-0" MAX FOR 8"ø & SMALLER PIPE
   - 5'-0" MAX FOR 10"-12"ø PIPE

B PIPE SUPPORT TYPE 1
NTS

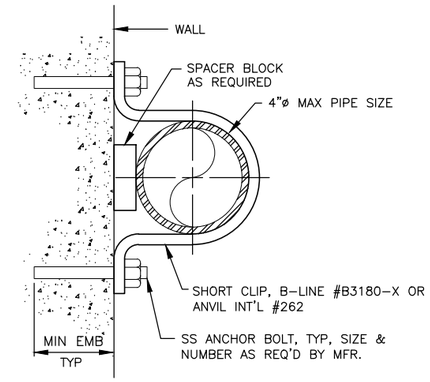

NOTES:

1. FOR VERTICAL PIPES ONLY.
2. ALL BOLTS AND NUTS SHALL BE TYPE 316 SS.
3. SUPPORT SPACING SHALL BE 10'-0" MAX.
4. WHEN SUPPORT IS USED WITH PVC PIPE, WRAP PIPE WITH 1/4" NEOPRENE SHEET AND PROVIDE LOOSE FITTING STEELSHEILD AROUND PIPE AT CLIP.
5. ON STEEL BEAMS AND COLUMNS, SECURE SUPPORTS WITH SS NUTS AND BOLTS AS REQUIRED.

C PIPE SUPPORT TYPE 2
NTS

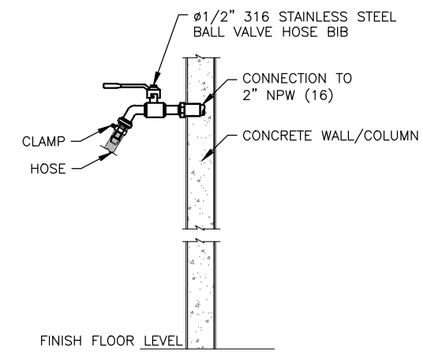

NOTES:

1. HOSE BIBS SHALL BE LOCATED APPROXIMATELY 18" ABOVE GRADE. CONTRACTOR SHALL COORDINATE EXACT LOCATIONS WITH COA/AW.
2. SUPPORT 2" NPW (16) TO HOSE BIB LOCATION USING PIPE SUPPORTS AS NECESSARY.

D HOSE BIB
NTS

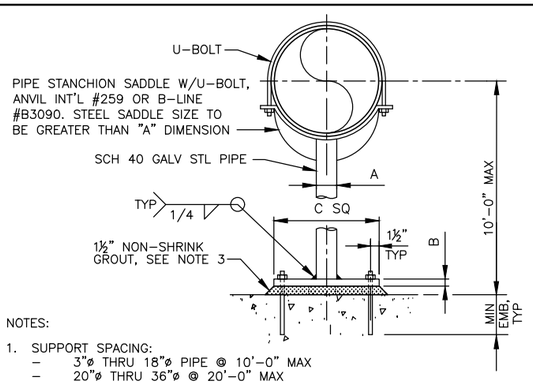

NOTES:

1. SUPPORT SPACING:
   - 3"ø THRU 18"ø PIPE @ 10'-0" MAX
   - 20"ø THRU 36"ø @ 20'-0" MAX
2. PROVIDE HALF ROUND RIGID INSULATION AND INSULATION PROTECTION SHIELD, SIMILAR TO ANVIL INT'L #167, WHERE PIPING IS INSULATED.
3. WHERE PIPING IS ADJACENT TO MECHANICAL EQUIPMENT, REPLACE GROUT WITH NEOPRENE WAFFLE ISOLATION PAD, MASON TYPE "W" OR KORPAD 40.
4. SEE ANCHOR BOLT SCHEDULE, SHT XXX, FOR MINIMUM EMBEDMENT.
5. SUPPORT IS DESIGNED FOR USE IN INDOOR LOCATIONS WITH NO WIND LOAD FACTOR.

DIMENSION TABLE (INCHES)																
PIPE SIZE	3	4	5	6	8	10	12	14	16	18	20	22	24	26	30	36
A	3	3	3	3	3	6	6	6	6	6	8	8	8	8	8	8
B	1/2	1/2	1/2	1/2	1/2	1/2	1/2	1/2	1/2	1/2	3/4	3/4	3/4	3/4	3/4	3/4
C	9	9	9	9	9	12	12	12	12	12	16	16	16	16	16	16
BOLT DIA.	1/2	1/2	1/2	1/2	1/2	1/2	1/2	1/2	1/2	1/2	3/4	3/4	3/4	3/4	3/4	3/4

E PIPE SUPPORT
NTS

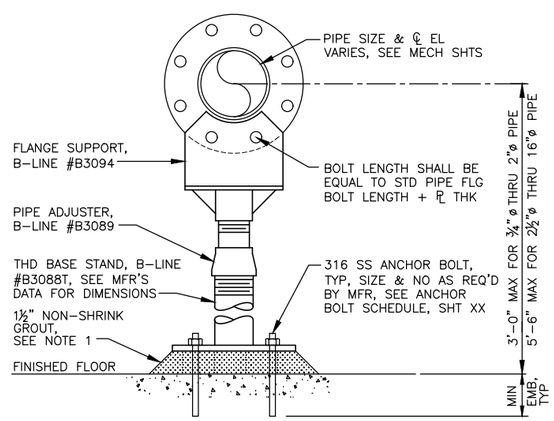

NOTES:

1. WHERE PIPING IS ADJACENT TO MECHANICAL EQUIPMENT, REPLACE GROUT WITH NEOPRENE WAFFLE ISOLATION PAD, SIMILAR TO MASON TYPE "W" OR KORPAD 40.
2. SUPPORT SPACING:
   - 2½"ø THRU 16"ø PIPE @ 10'-0" MAX
   - ¾"ø THRU 2"ø PIPE @ 5'-0" MAX
3. ALL SUPPORTS SHALL BE 316 SS.

F PIPE FLANGE SUPPORT
NTS

CP&Y, INC.
TBPE FIRM REGISTRATION NO. F-1741

STATE OF TEXAS — KATELYN R. BACKHAUS — 135285 — LICENSED PROFESSIONAL ENGINEER — 5/26/2021

NO.	REVISION	BY	DATE

VERIFY SCALE 0 1" BAR IS ONE INCH ON ORIGINAL DRAWING. IF NOT ONE INCH ON THIS SHEET, ADJUST SCALE

CITY OF AUSTIN – AUSTIN WATER
HORNSBY BEND BMP CENTRIFUGES

MECHANICAL DETAILS III

Date: MAY 2021
Designed: P.VILLARREAL
Drawn: S.MEDINA
Reviewed: K.BACKHAUS
CP&Y Proj. AUST1600646.01

SHEET
M-11

REFERENCES: STD MECH DETAILS.dwg AUST1600646.01 Border Base.dwg _Std ENVIRO SEALS
May 24, 2021 – 12:22pm C:\pwworking\cpy\pw_cpy\pvillarreal\d0795251\AUST1600646.01_5_M-9_&_M-14_OPY.dwg

NOTES:

1. ALL METAL SURFACES ARE TO BE FREE OF ALL BURRS, SHARP EDGES, SCALE AND ANY OTHER SURFACE CONTAMINANTS.
2. 316 SS. CHUTE WALL 12GA. CHUTE FLANGES TO BE 1/4.
3. ALL JOINTS TO BE SEAL WELDED.
4. CHUTE MUST BE SUPPORTED. SUPPORT SHOULD BE DESIGNED FOR 450 LB LOAD.
5. DESIGN & SUPPLY OF SUPPORTS BY OTHER THAN ANDRITZ

No	DRAWING No	QTY	DESCRIPTION	MATERIAL
01	–	1	TOP FLANGE PLATE, 1/4" – 316SS	*
02	–	1	BOTTOM FLANGE PLATE, 1/4" – 316SS	*
03	–	2	LARGE SIDE WALL 12GA – 316SS	*
04	–	2	SMALL SIDE WALL 12GA – 316SS	*
05	–	1	PIPE COUPLING, HALF, 1–1/4" FNPT – 316SS	*
06	–	1	PIPE STUB 6" SCH 10 PIPE – 316SS	*
07	–	1	PIPE FLANGE 6" CLASS 150 RFSO – 316SS	*
08	–	1	1" HALF COUPLING FNPT	*

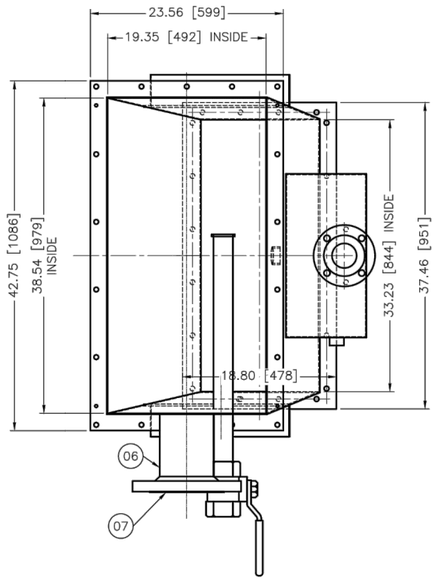

TOP VIEW

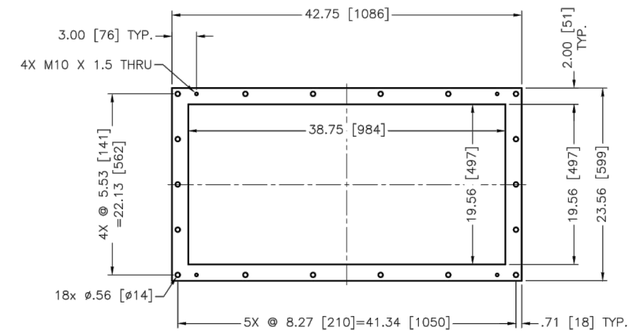

TOP FLANGE DETAIL
HARDWARE SUPPLIED BY ANDRITZ

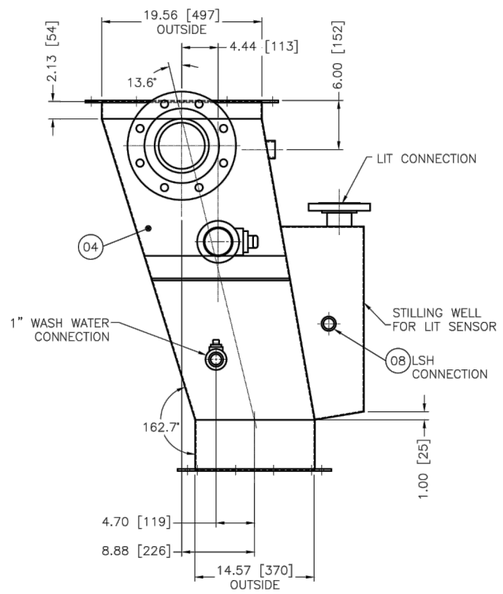

END VIEW

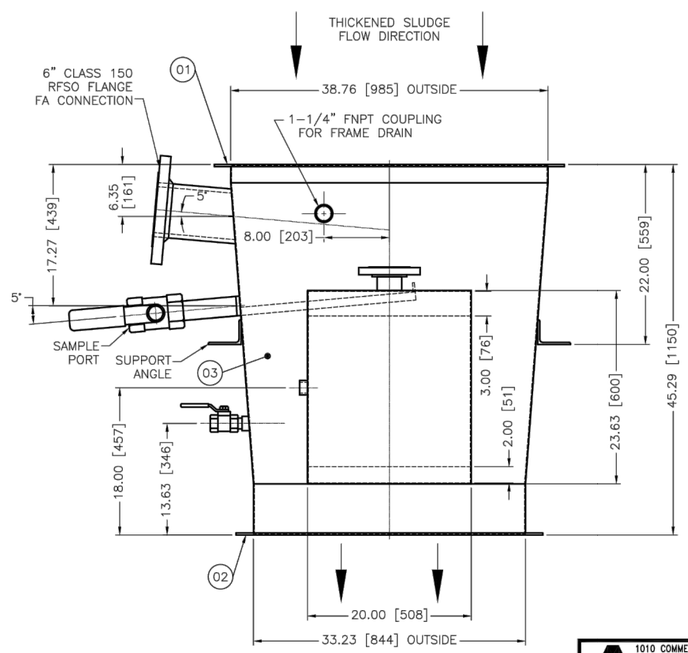

FEED END VIEW

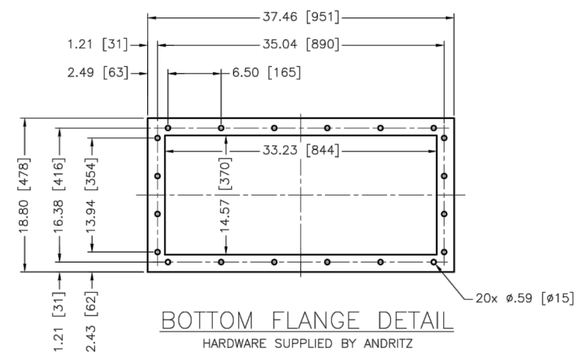

BOTTOM FLANGE DETAIL
HARDWARE SUPPLIED BY ANDRITZ

APPROXIMATE EMPTY WEIGHT 300 LBS

REV	EIR	REVISION	BY	APVD	DATE
7		ADD 4" TO CHUTE HEIGHT	WCH	JJA	11/07/19
6		CERTIFIED DRAWING	RMS	JJA	07/31/19
5		UPDATE O.A. HEIGHT	WCH	JJA	07/18/19
4		MODIFIED BOTTOM FLANGE	RMS	JJA	6/25/19
3		SHORTERNED CHUTE 6" FOR PUMP PAD	JJA	XCR	5/2/19
2		UPDATED LIT & VENT CONNECTIONS, SUPPORT DESIGN LOAD	JJA	AM	3/12/19
1		STILLING WELL, FLOW ARROWS, SAMPLE PORT, SUPPORTS	JJA	TB	2/14/19

ASAP No.– 20761

ANDRITZ SEPARATION, INC.
1010 COMMERCIAL BLVD. SOUTH
ARLINGTON, TEXAS 76017
Phone: (817)465-5611
Telefax: (817)472-8589

CERTIFIED CORRECT FOR INSTALLATION
BY: JJA DATE: 8/8/19
PROJECT No. 833578
THESE DWGS. REFLECT CUSTOMER'S CHANGES AND APPROVAL ON PREVIOUS DWG. TRANSMITTALS

ESTIMATED WEIGHT IN LBS: –	DRAWN BY: WCH	DATE 12/11/18
UNLESS OTHERWISE SPECIFIED: DIMENSIONS ARE IN INCHES	CHECKED BY: JJA	DATE 12/11/18
FABRICATION TOLERANCES .XXX±.040 ANG±1° HOLE±.020	APPROVED BY: JJA	DATE 12/11/18
MACHINING TOLERANCES .XXX±.005 ANG±.5° HOLE±.020	THIRD ANGLE PROJECTION	
MILL FINISH ALL OVER		

ANDRITZ
ANDRITZ SEPARATION, INC.
1010 COMMERCIAL BLVD. SOUTH
ARLINGTON, TEXAS 76001
PHONE: (817) 465-5611

TITLE D7LL CENTRIFUGE
HORNSBY BEND
SOLIDS CHUTE

SIZE	DRAWING NUMBER	REV
D	M833578–5	7
SCALE 1/8	FILE M833578–5	SHEET 1 OF 1

THIS DRAWING IS COPY RIGHTED
THIS DRAWING IS A TRADE SECRET AND ONLY ENTRUSTED TO THE RECEIVER FOR HIS PERSONAL USE. WITHOUT THE SIGNED WRITTEN CONSENT OF ANDRITZ SEPARATION, INC., IT MUST NOT BE COPIED NOR MADE AVAILABLE TO THIRD PARTIES, INCLUDING COMPETITORS, NOR MADE ACCESSIBLE TO SUCH PARTIES. ANY ILLEGAL USE BY THE RECEIVER OR THIRD PARTIES FOR WHICH HE IS RESPONSIBLE CAN CONSTITUTE A CAUSE FOR LEGAL ACTION. THIS DRAWING MUST BE RETURNED ON REQUEST OF THE COMPANY.

A SOLIDS CHUTE SHOP DRAWING

NOTES:

1. SHOP DRAWING PROVIDED FOR THE CONVENIENCE OF THE CONTRACTOR.
2. REFER TO M–14 FOR CHUTE SUPPORTS.
3. HB–TC–CE–100 SOLIDS CHUTE SAMPLE PORT, DRAIN, AND ODOR EXHAUST CONNECTION SHALL FACE THE NORTH END OF THE BUILDING. HB–TC–CE–200 SOLIDS CHUTE SAMPLE PORT, DRAIN AND ODOR EXHAUST CONNECTION SHALL FACE THE SOUTH END OF THE BUILDING.
4. LIT SHALL TRIGGER THE CENTRIFUGE TO GO INTO PAUSE MODE AND TURN ON THE DISCHARGE PUMP TO FLUSH THE CHUTE. MATCH LIT LOCATION AND CONFIGURATION TO EXISTING CENTRIFUGES.

CP&Y, INC.
TBPE FIRM REGISTRATION NO. F–1741

NO.	REVISION	BY	DATE

VERIFY SCALE 0 1"
BAR IS ONE INCH ON ORIGINAL DRAWING. IF NOT ONE INCH ON THIS SHEET, ADJUST SCALE

CITY OF AUSTIN – AUSTIN WATER
HORNSBY BEND BMP CENTRIFUGES

CENTRIFUGE SOLIDS CHUTE
SHOP DRAWINGS

Date:	MAY 2021	
Designed:	P.VILLARRERAL	
Drawn:	S.MEDINA	
Reviewed:	K.BACKHAUS	
CP&Y Proj:	AUST1600646.01	

SHEET
M–12

REFERENCES: STD MECH DETAILS.dwg AUST1600646.01 Border Base.dwg _Std ENVIRO SEALS
May 24, 2021 – 12:22pm C:\pwworking\cpy\pw_cpy\pvillarreal\d0795251\AUST1600646.01_5_M-9_&_M-14_CPY.dwg

No	DRAWING No	QTY	DESCRIPTION	MATERIAL
01	–	1	TOP FLANGE PLATE, 1/4" – 316SS	*
02	–	2	LARGE SIDE WALL 12GA – 316SS	*
03	–	2	SMALL SIDE WALL 12GA – 316SS	*
04	–	1	SQUARE TO ROUND TRANSITION 12GA – 316SS	*
05	–	1	PIPE STUB 10" SCH 10 PIPE – 316SS	*
06	–	1	PIPE FLANGE 10" CLASS 150 RFSO – 316SS	*
07	–	2	PIPE COUPLING, HALF, 1–1/4" FNPT – 316SS	*

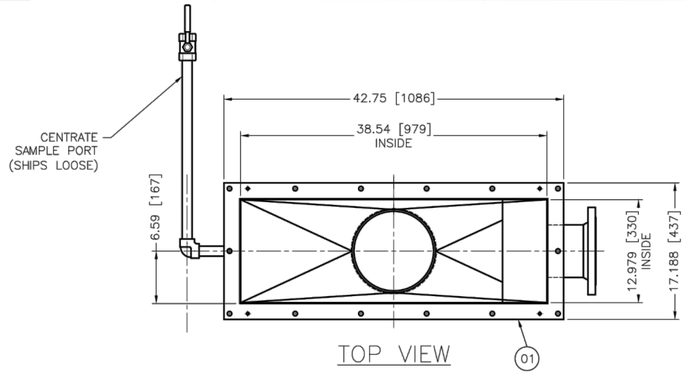

TOP VIEW

NOTES:

1. ALL METAL SURFACES ARE TO BE FREE OF ALL BURRS, SHARP EDGES, SCALE AND ANY OTHER SURFACE CONTAMINANTS.
2. 316 SS. CHUTE WALL 12GA. CHUTE FLANGES TO BE 1/4.
3. ALL JOINTS TO BE SEAL WELDED.
4. CHUTE MUST BE SUPPORTED. SUPPORT SHOULD BE DESIGNED FOR 470 LB LOAD.
5. DESIGN & SUPPLY OF SUPPORTS BY OTHER THAN ANDRITZ

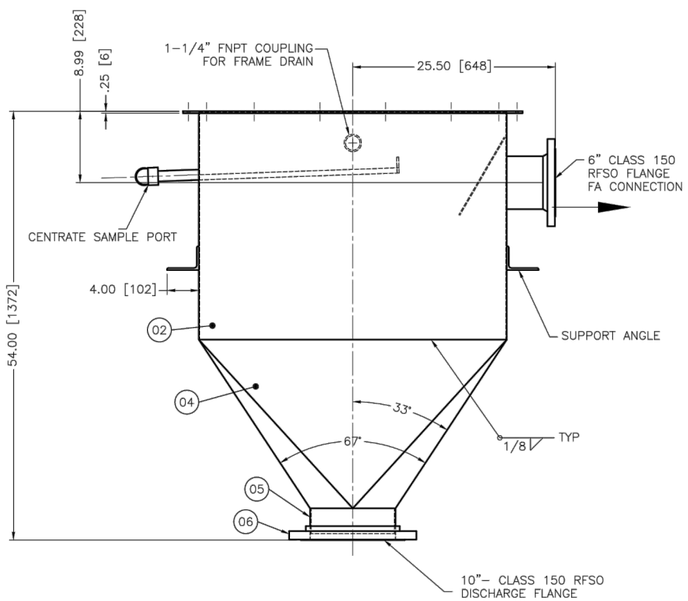

FEED END VIEW

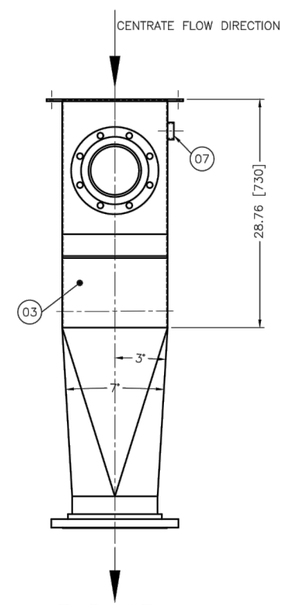

END VIEW

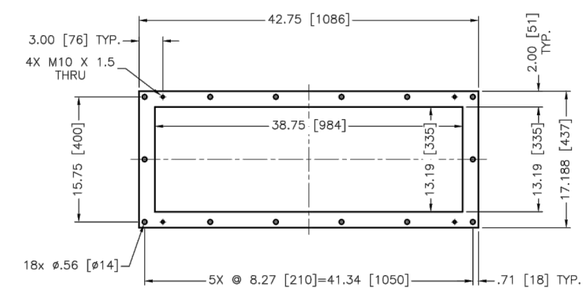

TOP FLANGE DETAIL

HARDWARE SUPPLIED BY ANDRITZ

APPROXIMATE EMPTY WEIGHT 310 LBS

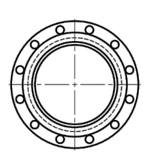

BOTTOM FLANGE DETAIL

HARDWARE & GASKET SUPPLIED BY OTHERS

REV	EIR	REVISION	BY	APVD	DATE
4		SHORTENED HEIGHT OF CHUTE 6" PER CUSTOMER REQUEST	WCH	JJA	11/07/19
3		CERTIFIED DRAWING	RMS	JJA	07/31/19
2		ADDED SUPPORT DESIGN LOAD (NOTE 4)	JJA	AM	3/12/19
1		ADDED FLOW ARROWS, SAMPLE PORT, SUPPORT ANGLES	JJA	JB	2/13/19

ASAP No.– 20761

ANDRITZ SEPARATION, INC.
1010 COMMERCIAL BLVD. SOUTH
ARLINGTON, TEXAS 76017
Phone: (817)465–5611
Telefax: (817)472–8589

CERTIFIED CORRECT FOR INSTALLATION
BY: JJA DATE: 8/8/19
PROJECT No. 833578
THESE DWGS. REFLECT CUSTOMER'S CHANGES AND APPROVAL ON PREVIOUS DWG. TRANSMITTALS

ESTIMATED WEIGHT IN LBS: –
UNLESS OTHERWISE SPECIFIED: DIMENSIONS ARE IN INCHES
FABRICATION TOLERANCES .XXX±.040 ANG±1° HOLE±.020
MACHINING TOLERANCES .XXX±.005 ANG±.5° HOLE±.020
MILL FINISH ALL OVER

		DATE
DRAWN BY:	WCH	12/11/18
CHECKED BY:	JJA	12/11/18
APPROVED BY:	JJA	12/11/18
THIRD ANGLE PROJECTION		

ANDRITZ

ANDRITZ SEPARATION, INC.
1010 COMMERCIAL BLVD. SOUTH
ARLINGTON, TEXAS 76001
PHONE: (817) 465–5611

TITLE
D7LL CENTRIFUGE
HORSBY BEND
CENTRATE CHUTE

SIZE	DRAWING NUMBER	REV
D	M833578–4	4
SCALE 1/8	FILE M833578–4	SHEET 1 OF 1

THIS DRAWING IS COPY RIGHTED
THIS DRAWING IS A TRADE SECRET AND ONLY ENTRUSTED TO THE RECEIVER FOR HIS PERSONAL USE. WITHOUT THE SIGNED WRITTEN CONSENT OF ANDRITZ SEPARATION, INC., IT MUST NOT BE COPIED, REPRODUCED, PUBLISHED, MADE ACCESSIBLE TO THIRD PARTIES OR OTHERWISE USED. COMPETITION WIDE ACCESS IS NO ABLE TO THIRD PARTIES. ANY ILLEGAL USE BY THE RECEIVER OR THIRD PARTIES FOR WHICH HE IS RESPONSIBLE CAN CONSTITUTE A CAUSE FOR LEGAL ACTION. THIS DRAWING MUST BE RETURNED ON REQUEST OF THE COMPANY.

NOTES:

1. SHOP DRAWING PROVIDED FOR THE CONVENIENCE OF THE CONTRACTOR.
2. REFER TO M–14 FOR CHUTE SUPPORTS.
3. HB–TC–CE–100 SOLIDS CHUTE ODOR EXHAUST CONNECTION SHALL FACE THE NORTH END OF THE BUILDING. HB–TC–CE–200 SOLIDS CHUTE ODOR EXHAUST CONNECTION SHALL FACE THE SOUTH END OF THE BUILDING.

(A) CENTRATE CHUTE SHOP DRAWING

CP&Y, INC.
TBPE FIRM REGISTRATION NO. F–1741

NO.	REVISION	BY	DATE

VERIFY SCALE 0 1"
BAR IS ONE INCH ON ORIGINAL DRAWING. IF NOT ONE INCH ON THIS SHEET, ADJUST SCALE

CITY OF AUSTIN – AUSTIN WATER
HORNSBY BEND BMP CENTRIFUGES

CENTRIFUGE CENTRATE CHUTE
SHOP DRAWING

Date:	MAY 2021
Designed:	P.VILLARREAL
Drawn:	S.MEDINA
Reviewed:	K.BACKHAUS
CP&Y Proj.	AUST1600646.01

SHEET
M–13

REFERENCES: STD MECH DETAILS.dwg AUST1600646.01 Border Base.dwg Std ENVIRO SEALS
May 24, 2021 – 12:22pm C:\pwworking\cpy\pw_cpy\pvillarreal\d0795251\AUST1600646.01_5_M-9_&_M-14_CPY.dwg

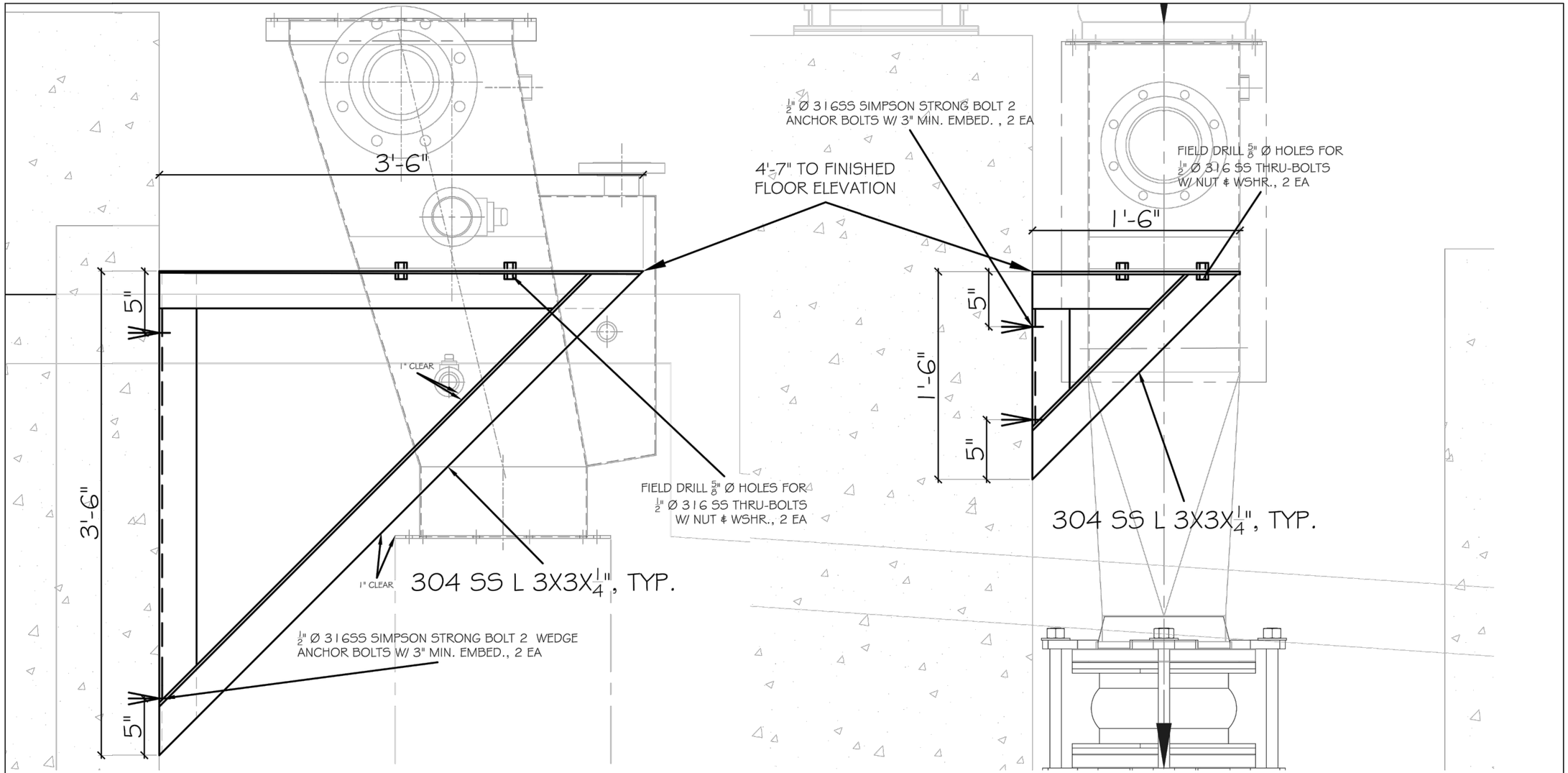

A SLUDGE CHUTE SUPPORTS (ONE EACH SIDE - 6 TOTAL)

SCALE: NTS

B CENTRATE CHUTE SUPPORTS (ONE EACH SIDE - 6 TOTAL)

SCALE: NTS

ALL JOINTS FULLY WELDED WITH 1/4" FILLET WELDS

FABRICATE 3 EA AS SHOWN AND 3 EA MIRROR IMAGE FOR OPPOSITE SIDE OF MACHINE.

CHUTE SUPPORTS ARE DESIGNED FOR 500 LB. LOADING PER CENTRIFUGE MANUFACTURER RECOMMENDATIONS.

STATE OF TEXAS
ANDREW W. ROBERTS
110235
LICENSED
PROFESSIONAL ENGINEER
7-29-2020

REV	DATE	REVISION DESCRIPTION
1	07/29/2020	ADDED ANCHOR DIMS. & NOTES, ADDED SEAL
0	7/15/2020	ORIGINAL

MATOUS

A.W. ROBERTS ENGINEERING & CONSTRUCTION, PLLC F-20660

CITY OF AUSTIN – AUSTIN WATER

HORNSBY BEND BMP THICKENER COMPLEX REHAB.
CENTRIFUGE CHUTE SUPPORTS

CS–1

SHEET 1 OF 1

A SOLIDS & CENTRATE CHUTE SUPPORTS SHOP DRAWING

NOTES:

1. SHOP DRAWING PROVIDED FOR THE CONVENIENCE OF THE CONTRACTOR.

CP&Y, INC.
TBPE FIRM REGISTRATION NO. F-1741

CITY OF AUSTIN ESTD. 1839 FOUNDED

NO.	REVISION	BY	DATE

VERIFY SCALE 0 1" BAR IS ONE INCH ON ORIGINAL DRAWING. IF NOT ONE INCH ON THIS SHEET, ADJUST SCALE

CITY OF AUSTIN – AUSTIN WATER
HORNSBY BEND BMP CENTRIFUGES

CENTRIFUGE SOLIDS AND CENTRATE CHUTE SUPPORTS SHOP DRAWINGS

Date: MAY 2021
Designed: P.VILLARREAL
Drawn: S.MEDINA
Reviewed: K.BACKHAUS
CP&Y Proj. AUST1600646.01

SHEET
M–14

REFERENCES: STD MECH DETAILS.dwg AUST1600646.01 Border Base.dwg _Std ENVIRO SEALS
May 24, 2021 – 12:22pm C:\pwworking\cpy\pw_cpy\pvillarreal\d0795251\AUST1600646.01_5_M-9_&_M-14_CPY.dwg

DUCTWORK SYMBOLS

- SUPPLY DIFFUSER/GRILLE
- RETURN GRILLE
- EXHAUST GRILLE
- 12" DIA. — ROUND DUCT. SIZE IN INCHES. SIZE INDICATED IS DUCT DIAMETER.
- 24x12 — RECTANGULAR DUCT. SIZE IN INCHES. FIRST NUMBER IS SIDE SHOWN.
- 20x12 — SUPPLY OR OUTSIDE AIR DUCT UP
- 20x12 — SUPPLY OR OUTSIDE AIR DUCT DOWN
- 20x12 — RETURN DUCT UP
- 20x12 — RETURN DUCT DOWN
- 20x12 — EXHAUST DUCT UP
- 20x12 — EXHAUST DUCT DOWN
- ROUND DUCT UP
- ROUND DUCT DOWN
- RECTANGULAR ELBOW WITH TURNING VANES
- 20x12 16x8 — TRANSITION – RECTANGULAR TO RECTANGULAR
- 20x12 10" — TRANSITION – RECTANGULAR TO ROUND
- UP — ELEVATION CHANGE (UP) RISE, (DN) DROP
- FLEXIBLE CONNECTION
- FLEXIBLE DUCT – SINGLE LINE
- DIFFUSER TAKEOFF WITH FLARED SPIN-IN TAP, MANUAL DAMPER AND FLEX DUCT
- RECTANGULAR DUCT BRANCH TAKEOFF WITH 45 DEG TAP
- ROUND DUCT BRANCH TAKEOFF WITH CONICAL TAP FROM RECT. OR ROUND MAIN
- M — MOTORIZED ROUND DUCT DAMPER
- M — MOTORIZED RECTANGULAR DAMPER

HVAC SYMBOLS

- H — HUMIDITY SENSOR (SEE PLANS FOR LOCATION)
- P — PRESSURE INDICATING GAGE AND COCK
- TEMPERATURE INDICATOR
- TT — TEMPERATURE TRANSMITTER
- T — THERMOSTAT (ROOM OR DUCT MOUNTED) LOCATE AT 60" AFF, UNO
- CO — CARBON MONOXIDE DETECTOR
- CO2 — CARBON DIOXIDE DETECTOR
- NO2 — NITROGEN DIOXIDE DETECTOR
- FS — FLOW SWITCH/SENSOR
- SD — SMOKE DETECTOR (DUCT MOUNTED)
- TS — TEMPERATURE SENSOR
- TL — LOW LIMIT TEMPERATURE SENSOR
- TH — HIGH LIMIT TEMPERATURE SENSOR
- PB — PUSH BUTTON
- M — MOTORIZED ACTUATOR
- REMOTE TEST STATION FOR DUCT SMOKE DETECTORS
- FLOW INDICATOR
- FM — FLOW METER
- CONNECTION POINT NEW TO EXISTING
- FORCED AIR TO SPACE
- INDIRECT AIR FROM SPACE
- 1/2" UC 100 CFM UNDERCUT DOOR
- 20X12 LD OR DG 200 CFM LOUVER DOOR OR DOOR GRILLE

PLUMBING SYMBOLS

- SANITARY SEWER PIPING
- VENT PIPING
- DOMESTIC COLD WATER PIPING
- 110° — HOT WATER PIPING (TEMP. AS NOTED)

PIPE VALVE SYMBOLS

- GATE VALVE
- GLOBE VALVE
- BALL VALVE
- FLOW BALANCING AND SHUTOFF VALVE
- BUTTERFLY VALVE
- CHECK VALVE, GENERAL SYMBOL
- S — SOLENOID VALVE
- ANGLE VALVE
- M — 2-WAY CONTROL VALVE
- M — 3-WAY CONTROL VALVE
- PRESSURE REDUCING VALVE
- PRESSURE RELIEF VALVE
- STRAINER-WITH BLOW DOWN VALVE
- NEEDLE VALVE
- VALVE-CIRCUIT SETTER
- PETE'S PLUG
- QUICK DISCONNECT – FEMALE END
- QUICK DISCONNECT-MALE END
- HOSE BIBB
- AUTOMATIC AIR RELEASE VENT
- MANUAL AIR RELEASE VENT
- BALL VALVE WITH HOSE CONNECTION
- RAIN LEADER DISCHARGE SPOUT
- CAP
- TEE-TOP CONNECTION
- ELBOW UP
- ELBOW DOWN
- P-TRAP
- TEE UP
- TEE DOWN
- UNION-SCREWED
- UNION-FLANGED
- STRAINER
- FLEX CONNECTOR

PIPE SYMBOLS – CONTINUED

- CONCENTRIC REDUCER
- ECCENTRIC REDUCER
- ALIGNMENT GUIDE
- ANCHOR
- DIRECTION OF PITCH
- HOSE
- FCO — FLOOR CLEANOUT
- DCO — DOUBLE CLEANOUT
- WCO — WALL CLEANOUT
- SHOCK ABSORBER W/ ISOLATION VALVE
- FLOW ALARM SWITCH
- EMERGENCY EYEWASH UNIT
- EMERGENCY SHOWER/EYEWASH UNIT

ABBREVIATIONS

A	@	AT
	AD	AIR DROP
	AFF	ABOVE FINISHED FLOOR
	ALT	ALTITUDE
	AP	ACCESS PANEL
	ASD	ADJUSTABLE SPEED DRIVE
	AUTO	AUTOMATIC
	AUX	AUXILIARY
	AVG	AVERAGE
B	BHP	BRAKE HORSEPOWER
	BLDG	BUILDING
	BOD	BOTTOM OF DUCT
	BOP	BOTTOM OF PIPE
	BTM	BOTTOM
	BTU	BRITISH THERMAL UNIT
C	℄	CENTER LINE
	CCW	COUNTER CLOCKWISE
	CENT	CENTRIFUGAL
	CFM	CUBIC FEET PER MINUTE
	CLASS/DIV	NEC AREA CLASSIFICATION
	CLG	CEILING
	CLR	CLEAR
	COL	COLUMN
	CONT	CONTINUE, CONTINUOUS
	CTR	CENTER
	CU FT	CUBIC FEET
	CW	CLOCKWISE
D	DACS	DATA ACQUISITION AND CONTROL SYSTEM
	DB	DRY BULB
	DCVBP	DOUBLE CHECK VALVE BACKFLOW PREVENTER
	DEG	DEGREE
	DIA, ø	DIAMETER
	DN	DOWN
	DWG	DRAWING
E	EA	EACH
	EL	ELEVATION
	EMERG	EMERGENCY
	ENT	ENTERING
	EQUIP	EQUIPMENT
	EWT	ENTERING WATER TEMPERATURE
F	F	FAHRENHEIT
	FLR	FLOOR
	FLG	FLANGE
	FE	FIRE EXTINGUISHER
	FL	FLOW LINE
	FPC	FIRE PROTECTION CONTRACTOR
	FPS	FEET PER SECOND
	FT	FEET
	FWE	FURNISHED WITH EQUIPMENT
G	GPM	GALLONS PER MINUTE
H	H-O-A	HAND-OFF-AUTO
	HP	HORSEPOWER
	HVAC	HEATING, VENTILATION AND AIR CONDITIONING
	HZ	HERTZ
I	ID	INSIDE DIAMETER
	IE	INVERT ELEVATION
	INV	INVERT
	IOS	INSTALLED BY OTHER SECTION
	IPS	IRON PIPE SIZE

ABBREVIATIONS – CONTINUED

K	KS	KITCHEN SINK
	KW	KILOWATT
L	LAB	LABORATORY
	LVG	LEAVING
	LWT	LEAVING WATER TEMPERATURE
M	M	MOTOR
	MATL	MATERIAL
	MAX	MAXIMUM
	MBH	THOUSAND BTU PER HOUR
	MCC	MOTOR CONTROL CENTER
	MECH	MECHANICAL
	MFR	MANUFACTURER
	MIN	MINIMUM
	MISC	MISCELLANEOUS
	MTD	MOUNTED
N	NA	NOT APPLICABLE
	NC	NORMALLY CLOSED
	NO	NORMALLY OPEN OR NUMBER
	NOM	NOMINAL
	NTS	NOT TO SCALE
O	OD	OUTSIDE DIAMETER
P	PD	PRESSURE DROP
	PG	PRESSURE GAUGE
	PLC	PROGRAMMABLE LOGIC CONTROLLER
	PNL	PANEL
	PSI	POUNDS PER SQUARE INCH
	PSIA	PSI ABSOLUTE
	PSIG	PSI GAUGE
	P&T	PRESSURE AND TEMPERATURE
R	RM	ROOM
	RPM	REVOLUTIONS PER MINUTE
S	SCADA	SUPERVISORY CONTROL AND DATA ACQUISITION
	SF	SQUARE FOOT (FEET)
	SHT	SHEET
	SPEC	SPECIFICATIONS
	SQ	SQUARE
	SSTL	STAINLESS STEEL
T	T&P	TEMPERATURE & PRESSURE RELIEF
	TEMP	TEMPERATURE
	THK	THICK(NESS)
	TOC	TOP OF CONCRETE
	TOP	TOP OF PIPE
	TOS	TOP OF STEEL
	TYP	TYPICAL
U	UL	UNDERWRITERS LABORATORY
	UNO	UNLESS NOTED OTHERWISE
W	W/	WITH
	W/O	WITHOUT
	WxH	WIDTH BY HEIGHT
	W&T	WASTE AND TRAP
	W&V	WASTE AND VENT

HVAC ABBREVIATIONS

EA	EXHAUST AIR
FRP	FIBERGLASS REINFORCED PLASTIC
LV	LOUVER
OCE	ODOR CONTROL EXHAUST

AACE Engineering Associates, Inc. TBPE Reg. No. 1084

CP&Y, INC. TBPE FIRM REGISTRATION NO. F-1741

CITY OF AUSTIN FOUNDED 1839

STATE OF TEXAS — RICARDO J. AZCARATE — 81863 — 02-11-2022

NO.	REVISION	BY	DATE

VERIFY SCALE 0 1" BAR IS ONE INCH ON ORIGINAL DRAWING. IF NOT ONE INCH ON THIS SHEET, ADJUST SCALE

CITY OF AUSTIN – AUSTIN WATER
HORNSBY BEND BMP CENTRIFUGES

HVAC LEGENDS & SYMBOLS

Date: APRIL 2021
Designed: J.IVEY
Drawn: M.ANDERSON
Reviewed: R.AZCARATE
CP&Y Proj: AUST1600646.01

SHEET
H-1

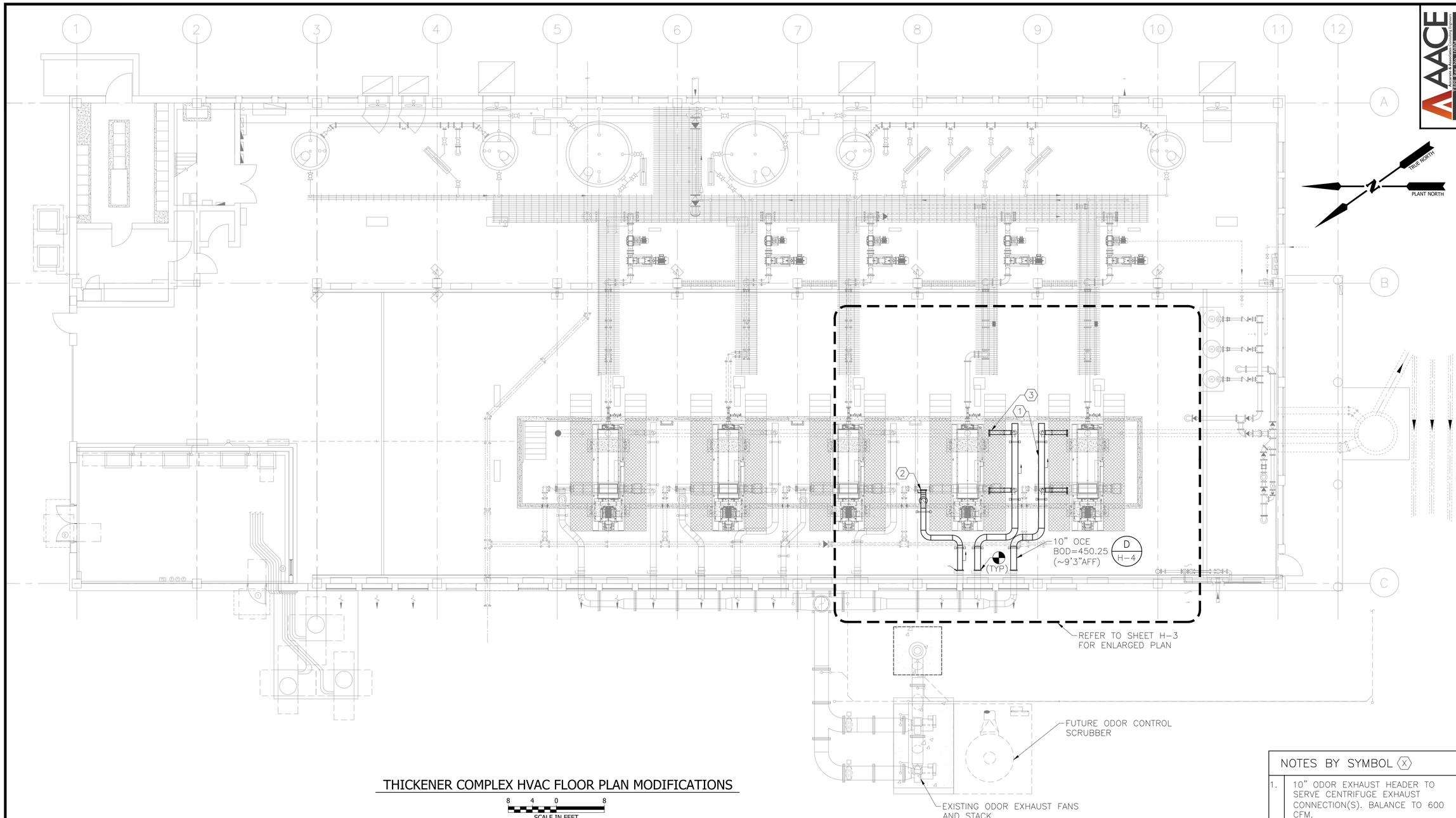

THICKENER COMPLEX HVAC FLOOR PLAN MODIFICATIONS

8 4 0 8
SCALE IN FEET

GENERAL NOTES:

1. ODOR CONTROL EXHAUST (OCE) DUCTWORK, INCLUDING ASSOCIATED FITTINGS, DAMPERS, AND GRILLES/REGISTERS SHOWN ON THIS SHEET SHALL BE FRP CONSTRUCTION. INSULATION IS NOT REQUIRED FOR OCE DUCTWORK.
2. ALL SUPPORTS, HARDWARE, AND FASTENERS SHALL BE 316 SSTL OR APPROVED EQUAL.
3. COORDINATE DUCT SUPPORTS AROUND CENTRIFUGES WITH THE EQUIPMENT MANUFACTURER AND MECHANICAL DRAWINGS TO PROVIDE ADEQUATE ACCESS AND CLEARANCE.

NOTES BY SYMBOL (X)

1. 10" ODOR EXHAUST HEADER TO SERVE CENTRIFUGE EXHAUST CONNECTION(S). BALANCE TO 600 CFM.
2. 10" ODOR EXHAUST DROP TO TRENCH (12" ABOVE BTM OF TRENCH). BALANCE TO 400 CFM.
3. 6" ODOR EXHAUST TAP WITH BALANCING DAMPER (INITIALLY FULL OPEN).

AACE
Austin Area Consulting Engineers
TBPE Reg. No. F-1084

CP&Y
CP&Y, INC.
TBPE FIRM REGISTRATION NO. F-1741

CITY OF AUSTIN
FOUNDED 1839

STATE OF TEXAS
RICARDO J. AZCARATE
81363
PROFESSIONAL ENGINEER
2021-04-14

NO.	REVISION	BY	DATE

VERIFY SCALE
0 1"
BAR IS ONE INCH ON ORIGINAL DRAWING. IF NOT ONE INCH ON THIS SHEET, ADJUST SCALE

CITY OF AUSTIN – AUSTIN WATER
HORNSBY BEND BMP CENTRIFUGES

HVAC OVERALL FLOOR PLAN MODIFICATIONS

Date: APRIL 2021
Designed: J.IVEY
Drawn: M.ANDERSON
Reviewed: R.AZCARATE
CP&Y Proj: AUST1600646.01

SHEET
H-2

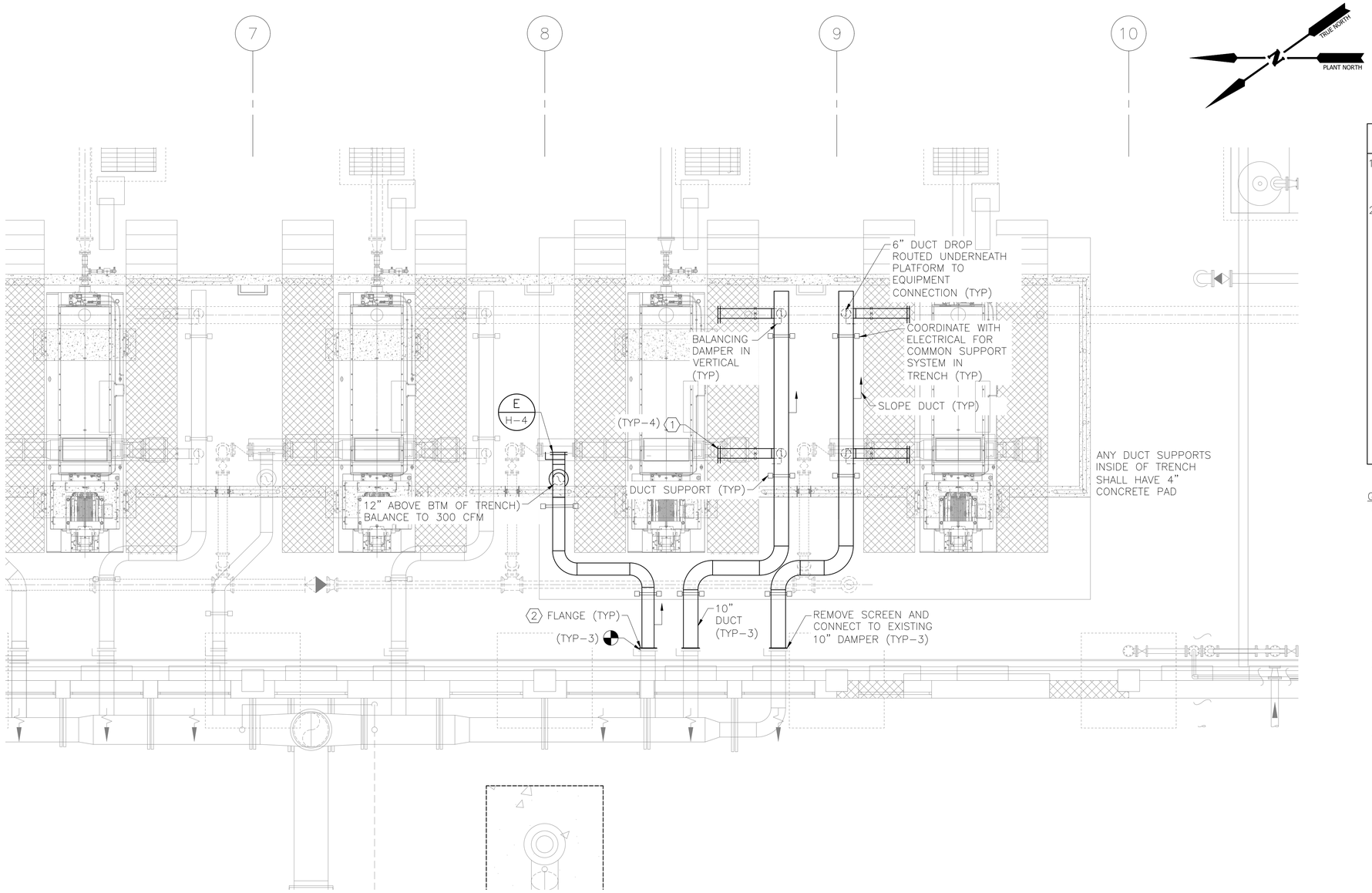

1
H3

HVAC ENLARGED PLAN/MODIFICATIONS

4 2 0 4
SCALE IN FEET

NOTES BY SYMBOL (X)

1. CONNECT 6-IN FRP ODOR EXHAUST TO FLANGED DUCT CONNECTION AT BASE OF CENTRIFUGE SIMILAR TO OTHER EXISTING CENTRIFUGES.
2. PROVIDE FLANGED DUCT CONNECTIONS WHERE INDICATED TO ALLOW PLANT PERSONNEL TO DISMANTLE DUCT FOR FUTURE CENTRIFUGE REMOVAL/REPLACEMENT.

GENERAL NOTES:

1. ODOR CONTROL EXHAUST (OCE) DUCTWORK, INCLUDING ASSOCIATED FITTINGS, DAMPERS, AND GRILLES/REGISTERS SHOWN ON THIS SHEET SHALL BE FRP CONSTRUCTION. INSULATION IS NOT REQUIRED FOR OCE DUCTWORK.
2. ALL SUPPORTS, HARDWARE, AND FASTENERS SHALL BE 316 SSTL OR APPROVED EQUAL.
3. COORDINATE DUCT SUPPORTS AROUND CENTRIFUGES WITH THE EQUIPMENT MANUFACTURER AND MECHANICAL DRAWINGS TO PROVIDE ADEQUATE ACCESS AND CLEARANCE.
4. SLOPE NEW ODOR EXHAUST DUCT 1/8" PER FT. MINIMUM DOWNWARD IN DIRECTION INDICATED SO CONDENSATE FORMED INSIDE DUCT CAN DRAIN TOWARD CENTRIFUGE/PIT AREA.

AACE Architects & Associates, P.C. TBPE Reg. No. 10934

CP&Y, INC.
TBPE FIRM REGISTRATION NO. F-1741

CITY OF AUSTIN ESTD. 1839 FOUNDED

STATE OF TEXAS
RICARDO J. AZCARATE
81363
PROFESSIONAL ENGINEER
22-04-14-1002

NO.	REVISION	BY	DATE

VERIFY SCALE 0 1"
BAR IS ONE INCH ON ORIGINAL DRAWING. IF NOT ONE INCH ON THIS SHEET, ADJUST SCALE

CITY OF AUSTIN – AUSTIN WATER
HORNSBY BEND BMP CENTRIFUGES

HVAC
ENLARGED PLAN
MODIFICATIONS

Date: APRIL 2021
Designed: J.IVEY
Drawn: M.ANDERSON
Reviewed: R.AZCARATE
CP&Y Proj. AUST1600646.01

SHEET
H-3

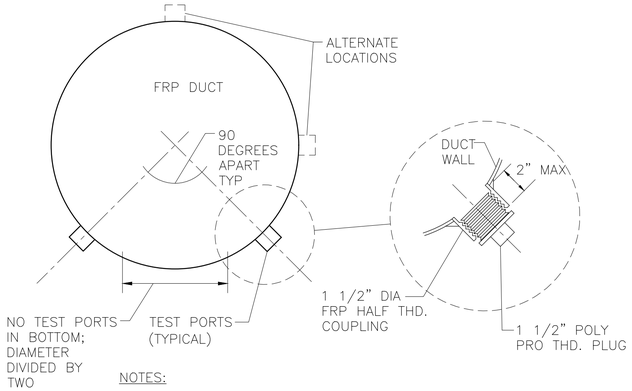

NOTES:

1. FOR DUCTS OVER 48" DIA. PROVIDE 4 PORTS, 90 DEGREES APART.
2. LOCATE AND POSITION TEST PORTS IN ACCESSIBLE LOCATIONS FOR A PERSON WITH A PITOT TUBE. IN SOME CASES THE TEST PORTS MAY NEED TO BE ON THE TOP OR THE SIDE.
3. LOCATION OF TEST PORTS SHALL BE IN ACCORDANCE WITH RECOMMENDATIONS OF AABC & NEBB.

A TEST PORTS FOR FRP DUCT

NTS

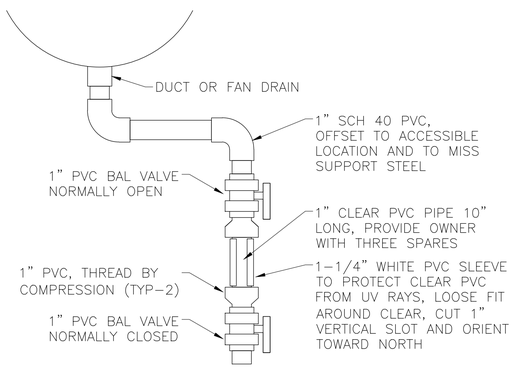

NOTES:

1. PROVIDE AT EACH FAN DRAIN AND AT INLET DUCT TO EACH FAN BEFORE TRANSITION.

B CONDENSATE DRAIN FOR DUCT OR FAN

NTS

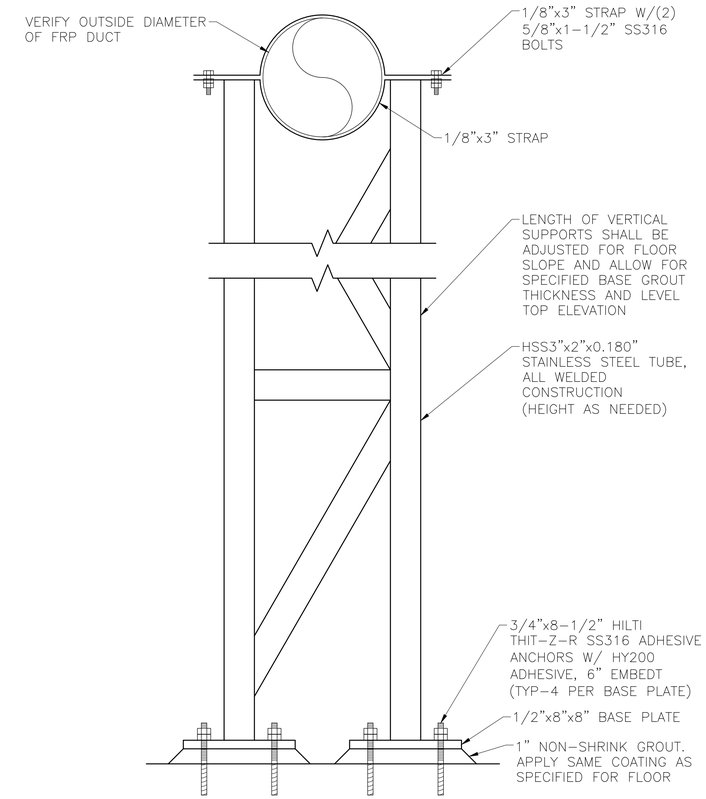

NOTE:

1. SUPPORTS, FASTENERS, AND HARDWARE SHALL BE 316 SSTL.
2. THIS DETAIL REPRESENTS THE BASIC CONSTRUCTION OF THE EXISTING SUPPORTS FABRICATED BY SEGUIN FABRICATORS LTD.. CONTRACTOR SHALL MATCH EXISTING SUPPORT SYSTEMS, FIELD VERIFY, MEASURE, AND SUBMIT COMPLETE FABRICATION SHOP DRAWINGS.
3. VERIFY SLOPE OF CONCRETE FLOOR AND ADJUST EACH SIDE OF THE SUPPORT ACCORDINGLY FOR A LEVEL TOP, DO NOT ADJUST WITH DIFFERENT GROUT THICKNESS.

C SUPPORT FOR HORIZONTAL FRP DUCT TO TRENCH

NTS

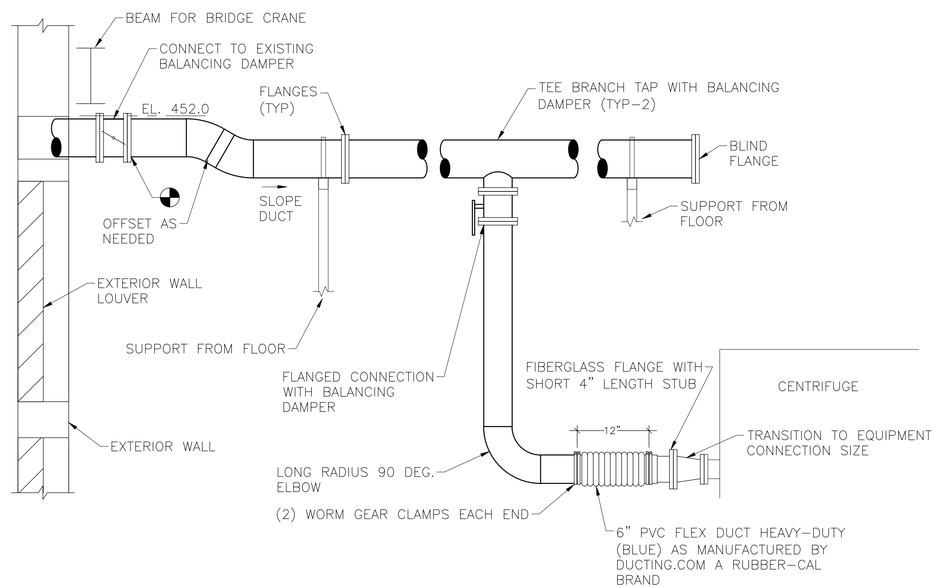

NOTE:

1. SUPPORTS, FASTENERS, AND HARDWARE SHALL BE 316 SSTL.
2. DUCT AND FITTINGS SHALL BE FLANGED FOR MAINTENANCE REMOVAL.
3. NUMBER, SIZE, AND LOCATION OF DUCT CONNECTIONS WILL VARY BETWEEN CENTRIFUGE MANUFACTURES. DUCT LAYOUT WILL BE AFFECTED. CONTRACTOR SHALL MAKE APPROPRIATE ADJUSTMENTS AND SUBMIT FOR ENGINEER'S REVIEW AT NO ADDITIONAL COST TO THE OWNER.

D CENTRIFUGE EXHAUST BRANCH

NTS

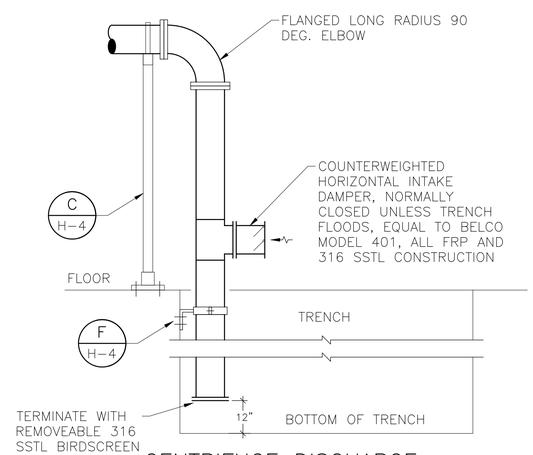

E CENTRIFUGE DISCHARGE ACCESS TRENCH EXHAUST BRANCH

NTS

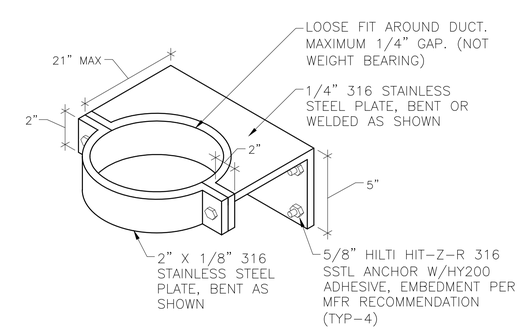

F SUPPORT FOR VERTICAL FRP DUCT IN TRENCH

NTS

AACE Member Association, Inc. TBPE Reg. No. 10934

CP&Y, INC.
TBPE FIRM REGISTRATION NO. F-1741

CITY OF AUSTIN ESTD. 1839 FOUNDED

STATE OF TEXAS
RICARDO J. AZCARATE
81363
PROFESSIONAL ENGINEER
02-04-2021

NO.	REVISION	BY	DATE

VERIFY SCALE 0 1" BAR IS ONE INCH ON ORIGINAL DRAWING. IF NOT ONE INCH ON THIS SHEET, ADJUST SCALE

CITY OF AUSTIN – AUSTIN WATER
HORNSBY BEND BMP CENTRIFUGES

HVAC DETAILS I

Date: APRIL 2021
Designed: J.IVEY
Drawn: M.ANDERSON
Reviewed: R.AZCARATE
CP&Y Proj. AUST1600646.01

SHEET
H-4

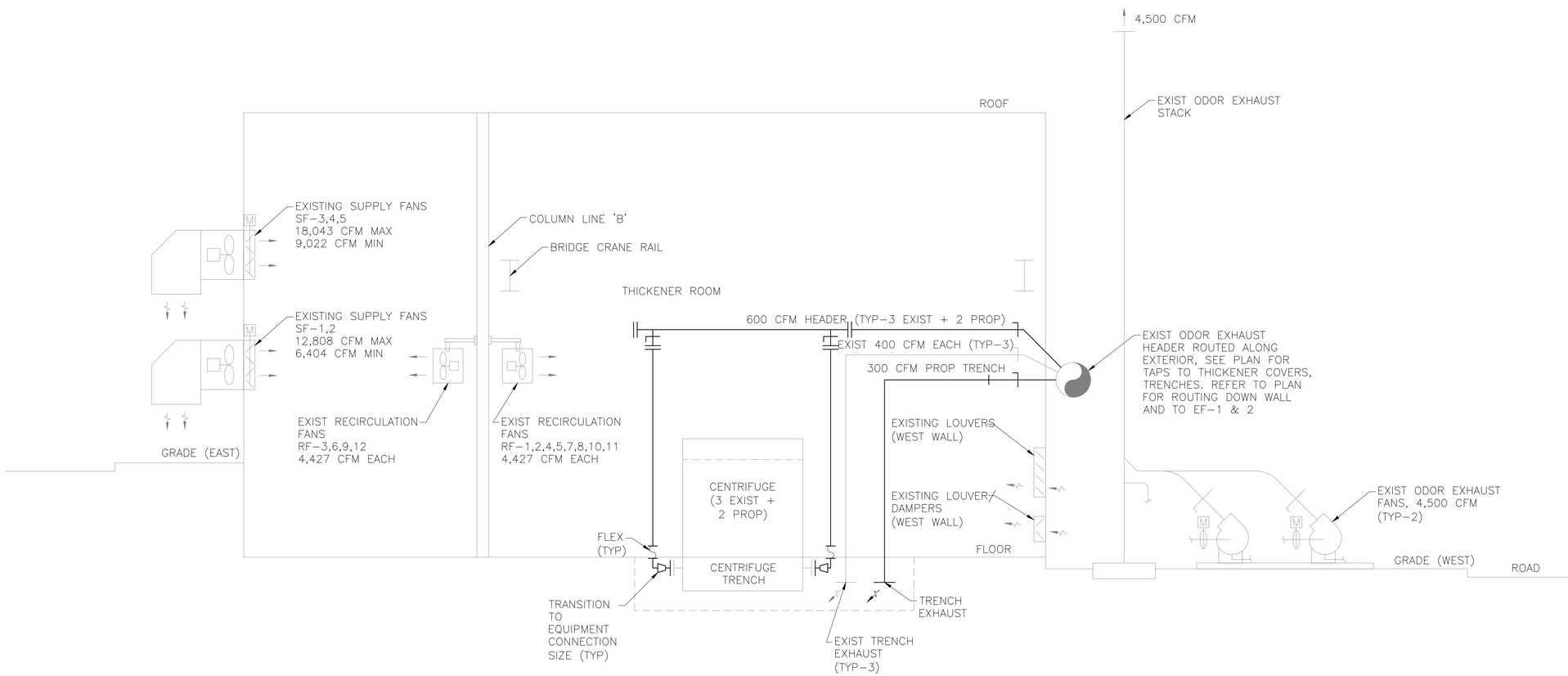

THICKENER COMPLEX HVAC SCHEMATIC

NTS

CP&Y, INC.
TBPE FIRM REGISTRATION NO. F-1741

NO.	REVISION	BY	DATE

VERIFY SCALE BAR IS ONE INCH ON ORIGINAL DRAWING. IF NOT ONE INCH ON THIS SHEET, ADJUST SCALE

CITY OF AUSTIN – AUSTIN WATER
HORNSBY BEND BMP CENTRIFUGES

HVAC DETAILS II

Date: APRIL 2021
Designed: J.LIVEY
Drawn: M.ANDERSON
Reviewed: R.AZCARATE
CP&Y Proj. AUST1600646.01

SHEET
H-5

ELECTRICAL SYMBOLS

SYMBOL	DESCRIPTION
	BRANCH CIRCUIT PANEL BOARD
	CONTROL PANEL
	TELEPHONE TERMINAL BOARD
TB	TERMINAL BOARD
	CONDUIT WITH WIRE HOT NEUTRAL SWITCH LEG GROUND
	CONCEALED CONDUIT OR UG CONDUIT
	EXPOSED CONDUIT
	GROUND MAT
	CONDUIT – UP
	CONDUIT – DOWN
	CONDUIT – STUBBED AND CAPPED
—S—	SOUND SYSTEM WIRING RUN
—OE—	OVERHEAD ELECTRIC LINES
—T—	CONDUIT FOR TELEPHONE, 3/4" UNLESS OTHERWISE INDICATED
	ABANDON CONDUIT & REMOVE CONDUCTORS
LP–1,3	HOME RUN, LP INDICATES PANEL LP, 1,3 INDICATES CIRCUITS 1 & 3.
DP–1/3 DP–1/3/5	HOME RUN (208/1PH, 480V/1PH OR 3PH), DP INDICATES PANEL DP–1/3 INDICATES (2) POLE BKR, CKTS 1 & 3 DP–1/3/5 INDICATES (3) POLE BKR, CKTS 1, 3, & 5
XXX	CABLE IDENTIFICATION TAG
XXX	INST./CONTROL CABLE IDENTIFICATION TAG
XX XX	NAMEPLATE OR LEGEND PLATE, SEE SCH.
XXXXXXX	INSTRUMENT TAG NUMBER
	NOTE ON SHEET, NO. AS INDICATED
	LUMINAIRE, TYPE AS NOTED
B	LUMINAIRE, TYPE AS NOTED
A	LUMINAIRE FLUORESCENT, TYPE AS NOTED
A	LUMINAIRE AND POLE, TYPE AS NOTED
D	WALL MOUNTED LUMINAIRE, TYPE AS NOTED
	FLOODLIGHTS AIM IN DIRECTION SHOWN
E	EXIT SIGN
D	EXIT/EMERGENCY COMBO
C	EMERGENCY LIGHTING UNIT
$3	LIGHT SWITCH, '3' INDICATES 3–WAY SWITCH
$M	MOTORIZED SWITCH
MSP	MANUFACTURER SUPPLIED PACKAGE INCLUDES LOCAL COMBINATION STARTER, MOTOR AND CONTROL PANEL. NUMBER INDICATES HORSE POWER
10 M	MOTOR, SQUIRREL CAGE INDUCTION HORSEPOWER INDICATED ON ONE LINE, NUMBER INDICATES HORSEPOWER
	CONVENIENCE RECEPTACLE–DUPLEX UNLESS SPECIFIED OTHERWISE
	C = CLOCK HANGER CR = CORROSION RESISTANT EWC = WATER COOLER TL = TWIST LOCK WP = WEATHERPROOF GFCI = GROUND FAULT CIRCUIT INTERRUPTER
	RECEPTACLE – 240V/1PH OR 208V/1PH
	MULTI–OUTLET ASSEMBLY
	RECEPTACLE – 480V/3PH OR 208V/3PH
	NON FUSED DISCONNECT
	FUSED DISCONNECT
	LOCAL COMBINATION (IN FIELD) MAGNETIC STARTER WITH THERMAL OVERLOAD

SYMBOL	DESCRIPTION
J	JUNCTION BOX
T	THERMOSTAT
	TELEPHONE/DATA OUTLET
	INSTRUMENT
	GROUND TEST WELL, REFER TO STANDARD DETAIL
	COPPERCLAD GROUND ROD
	GROUNDING PAD
	CIRCUIT BREAKER – THERMAL MAGNETIC 3 POLE UNLESS INDICATED OTHERWISE CONTINUOUS AMP TRIP SETTING INDICATED
100A	SWITCH – CURRENT RATING INDICATED. 3 POLE UNLESS INDICATED OTHERWISE
800AF/600AT	DRAWOUT AIR CIRCUIT BREAKER LOW VOLTAGE, FRAME SIZE AND TRIP SETTING INDICATED
1200A 52	DRAWOUT AIR OR VACUUM CIRCUIT BREAKER, (VCB) MEDIUM VOLTAGE, FRAME SIZE INDICATED
	LIGHTNING AND SURGE ARRESTOR
	FUSE, (ONE LINE DIAGRAM OR SCHEMATIC)
10	CAPACITOR – KVAR INDICATED
	GROUND, (ONE LINE DIAGRAM OR SCHEMATIC)
480V 120V	CONTROL POWER TRANSFORMER – VOLTAGES INDICATED
2000KVA 4160/480V	POWER DISTRIBUTION TRANSFORMER VOLTAGES AND RATING INDICATED
	SHIELDED ISOLATED TRANSFORMER VOLTAGES AND RATING INDICATED
3	CURRENT TRANSFORMER – NUMBER INDICATES QUANTITY
1	WINDOW CURRENT TRANSFORMER ENCLOSING ALL CONDUCTORS
24" W	CABLE TRAY, LADDER TYPE, WIDTH AS INDICATED
ATS	AUTOMATIC TRANSFER SWITCH
	ELECTRICAL SERVICE METER
OR	CONTROL STATION
	PUSH–BUTTON SWITCH, MOMENTARY CONTACT, NORMALLY OPEN
	PUSH–BUTTON SWITCH, MOMENTARY CONTACT, NORMALLY CLOSED
	PUSHBUTTON SWITCH, MAINTAINED CONTACTS, WITH MECHANICAL INTERLOCK
OFF LOCAL REMOTE POLE 1 XOO POLE 2 OOX	SELECTOR SWITCH–MAINTAINED CONTACT. CHART DEFINES OPERATION:
	PANELBAORD

POLE	POSITION LOCAL	OFF	REMOTE
1	X	0	0
2	0	0	X

X = CLOSED CONTACT
0 = OPEN CONTACT

SYMBOL	DESCRIPTION
	FLOW SWITCH
	LIMIT SWITCH
	PRESSURE SWITCH
	TEMPERATURE SWITCH OR THERMOSTAT
	VACUUM SWITCH
L.O. STOP	LOCKOUT STOP PUSH–BUTTON
	NORMALLY OPEN DELAY ON MAKE
	NORMALLY CLOSE DELAY ON MAKE
	NORMALLY CLOSE DELAY ON BREAK
	NORMALLY OPEN DELAY ON BREAK
	FLOAT SWITCH
A	INDICATING LIGHT – PUSH TO TEST LETTER INDICATES COLOR.
	MEDIUM VOLTAGE VACUUM INTERRUPTER
	CONTACT – NORMALLY OPEN
	CONTACT – NORMALLY CLOSED
	THERMAL OVERLOAD RELAY
	BASIC RELAY SYMBOL * SOME RELAY FUNCTIONS: ALT = ALTERNATOR CR = CONTROL RELAY TR = TIMING RELAY M = MOTOR CONTACTOR
	TERMINALS FOR FIELD OR REMOTE WIRING CONNECTIONS. DEVICES LOCATED BETWEEN THESES SYMBOLS ARE LOCATED IN THE FIELD OR REMOTELY.
	MOTOR OR STARTER ENCLOSURE SPACE HEATER (ONE LINE DIAGRAM OR SCHEMATIC)
+ –	BATTERY
	SOLID STATE DEVICE SUCH AS RECTIFIER OR SCR DRIVE
	DEVICE LOCATED AT MOTOR OR IN FIELD
	DEVICE LOCATED AT VALVE
	DEVICE LOCATED IN MCC
	DEVICE LOCATED IN SWGR – 5KV
	DEVICE LOCATED IN CONTROL/ INSTRUMENT PANEL
	STROBE/HORN
F	MANUAL PULL STATION
	SILENCE SWITCH
	EMERGENCY STOP
M	MOTOR OPERATED

GENERAL NOTES:

1. ELECTRICAL DETAILS AND STANDARD DETAILS SHOWN APPLY TO ALL EQUIPMENT AND MATERIALS PROVIDED ON THIS PROJECT.
2. CONTRACTOR SHALL VISIT PROJECT SITE AND BECOME AWARE OF ALL EXISTING CONDITIONS BEFORE SUBMITTING BID.
3. ANALOG CONTROL CIRCUITS MAY BE COMBINED IN A SINGLE CONDUIT. DIGITAL CONTROL CIRCUITS MAY BE COMBINED IN A SINGLE CONDUIT.
4. CONTACT LOCAL UTILITY COMPANY PRIOR TO ANY DIGGING. CALL BEFORE YOU DIG.

LEGEND:

- MODIFIED OR DEMOLISHED
- PROPOSED
- EXISTING

SWITCHGEAR / MCC SYMBOLS

SYMBOL	DESCRIPTION	SYMBOL	DESCRIPTION
25	SYNCHRONOUS CHECK RELAY	87T	TRANSFORMER DIFFERENTIAL PROTECTIVE RELAY
27	UNDERVOLTAGE PROTECTIVE RELAY	AM	AMMETER
32	REVERSE POWER PROTECTIVE RELAY	AS	AMMETER SWITCH
47	PHASE–SEQUENCE VOLTAGE RELAY	CS	BREAKER CONTROL SWITCH
49	OVERLOAD TEMPERATURE RELAY	E	ELECTRICAL INTERLOCK
50/51	TIME OC RELAY WITH INSTANTANEOUS ATTACHMENT	ETM	ELAPSED TIME METER
50G	INSTANTANEOUS OC GROUND FAULT RELAY	K	KEY INTERLOCK
50N	INSTANTANEOUS NEUTRAL OC RELAY	PF	POWER FACTOR METER
51	TIME OVERCURRENT RELAY	RPM	RPM METER
51G	TIME GROUND OVERCURRENT RELAY	SST	SOLID STATE TRIP
55	POWER FACTOR RELAY	T	TACHOMETER (4–20ma)
59	OVERVOLTAGE RELAY	TDR	TIME DELAY RELAY
63	TRANSFORMER SUDDEN PRESSURE RELAY	VAR	VAR METER
67	DIRECTIONAL OVERCURRENT RELAY	VM	VOLTMETER
74T	TEMPERATURE ALARM RELAY	VS	VOLTMETER SWITCH
81	UNDERFREQUENCY RELAY	W	WATTMETER
83	AUTOMATIC TRANSFER RELAY	W/WH	WATT/WATT HOUR TRANSDUCER
86	LOCKOUT RELAY	WH	WATT–HOUR METER
87	DIFFERENTIAL PROTECTIVE RELAY	WHD/WH	WATT HOUR DEMAND/WATT HOUR METER

ELECTRICAL ABBREVIATIONS

A	AMPERAGE
AC	ALTERNATING CURRENT
ACU	AIR CONDITIONING UNIT
AFF	ABOVE FINISH FLOOR
AFG	ABOVE FINISH GRADE
AHU	AIR HANDLING UNIT
AIT	ANALYZER INDICATING TRANSMITTER ANALOG
AJB	JUNCTION BOX
AM	AMMETER
ANN	ANNUNCIATOR
ANSI	AMERICAN NATIONAL STANDARD INSTITUTE
APP. EQ.	APPROVED EQUAL
AS	AMP METER SWITCH
ATS	AUTOMATIC TRANSFER SWITCH
AUTO	AUTOMATIC
AUX	AUXILIARY
B	BELL
BFM	BLOWER FILTER MOTOR
BYZ	WINDOW CURRENT TRANSFORMER
C,COND	CONDUIT
C	CONTACTOR COIL
C	VALVE CLOSE CONTACTOR
C	CONDUCTORS (#/C IN CABLE)
CAP	CAPACITOR
CB	CIRCUIT BREAKER
CC	CONTROL CABLE
C/C	CENTER TO CENTER
CHH	COMMUNICATIONS HAND HOLE
CJB	CONTROL JUNCTION BOX
CKT	CIRCUIT
CLD	CHLORINE LEAK DETECTOR
CM	CONDUIT MARKER
CMH	COMMUNICATION MANHOLE
CO	CONDUIT ONLY
CPB	CONCRETE PULL BOX
CPT	CONTROL POWER TRANSFORMER
CR	CONTROL RELAY
CS	CONTROL SWITCH
CT	CURRENT TRANSFORMER
CTRL	CONTROL
CU	CONDENSING UNIT
DC	DIRECT CURRENT
DF	DRINKING FOUNTAIN
DFR	DIFFERENTIAL RELAY
DS	DISCONNECT SWITCH
DTL	DETAIL
EC	EMPTY CONDUIT EXHAUST
EF	FAN
EHH	ELECTRIC HAND HOLE
EHU	ELECTRIC HEATER UNIT
EMH	ELECTRIC MANHOLE
EP	EXPLOSION PROOF
ETM	ELAPSED TIME METER
EW	EACH WAY
EWC	ELECTRIC WATER COOLER
EWH	ELECTRIC WATER HEATER
EXF	EXHAUST FAN
F	FORWARD
FCV	FLOW CONTROL VALVE
FIT	FLOW INDICATING TRANSMITTER
FT	FLOW TRANSMITTER
FLA	FULL LOAD AMPERE
FLUO	FLUORESCENT
FMR	FEEDER MANAGEMENT RELAY
FO	FIBER OPTIC
FQI	FLOW INTEGRATED TOTALIZER
FU	FUSE
FVNR	FULL VOLTAGE NON–REVERSING
FVR	FULL VOLTAGE REVERSING
G,GND	GROUND
GALV	GALVANIZED
GEN	GENERATOR
GFCI	GROUND FAULT CIRCUIT INTERRUPTER
GFR	GROUND FAULT RELAY

H	HORN
HSP	HOUSEKEEPING PAD
HDG	HOT DIPPED GALVANIZED
HID	HIGH INTENSITY DISCHARGE
HH	HAND HOLE
HOA	HAND OFF AUTOMATIC
HPS	HIGH PRESSURE SODIUM
HS	HAND SWITCH
HV	HIGH VOLTAGE
IC	INTERRUPTING CAPACITY
IGV	INLET GUIDE VANE
INCAND	INCANDESCENT
INST	INSTANTANEOUS INBOARD
INB	
JB	JUNCTION BOX
K	KEY INTERLOCK
KS	KEY SWITCH
KVA	KILOVOLT–AMPERE
KW	KILOWATT
L, LP	LIGHTING PANEL
LA	LIGHTNING ARRESTOR
LC	LIGHTING CONTACTOR
LCP	LOCAL CONTROL PANEL
LE	LEVEL ELEMENT
LIT	LEVEL INDICATING TRANSMITTER
LLO	LOW LEVEL LOCKOUT
LO	LOCKOUT
LPU	LOCAL PROCESSING UNIT
LR	LATCH RELAY
LRC	LOCKED ROTOR CURRENT
LS, LMS	LIMIT SWITCH
LS	LEVEL SWITCH
LSC	LIMIT SWITCH VALVE CLOSE
LSH	LEVEL HIGH SWITCH
LSL	LEVEL LOW SWITCH
LSO	LIMIT SWITCH VALVE OPEN
LTG	LIGHTING
LV	LOW VOLTAGE
M	MAGNETIC CONTACTOR COIL
M	MOTOR (ELECTRIC)
MB	MOTOR BEARING
MCC	MOTOR CONTROL CENTER
MGB	MASTER GROUND BAR
MJB	MOTOR JUNCTION BOX
MSC	MANUFACTURES SUPPLIED CABLE
MV	MERCURY VAPOR
MH	METAL HALIDE
MLO	MAIN LUGS ONLY
MOV	MOTOR OPERATED VALVE
MRP	MOTOR RELAY PROTECTION
MSH	MOTOR SPACE HEATER
N	NEUTRAL GROUNDED CONDUCTOR
NA	NON–AUTOMATIC
NC	NORMALLY CLOSED
NF	NON–FUSED
NO	NORMALLY OPEN
OB	OUTBOARD
OC	OVERCURRENT
OHD	OVERHEAD DOOR
OL	OVERLOAD
OPDU	OVERALL POWER DISTRIBUTION UNIT
OV	OVERVOLTAGE
PB	PUSHBUTTON
PB	PULLBOX
PBR	PUMP–BEARING RELAY
PC	PHOTOCELL
PC	PERSONAL COMPUTER
PH	PHASE
PLC	PROGRAMMABLE LOGIC CONTROLLER
PMT	PAD MOUNTED TRANSFORMER
PMGR	PAD MOUNTED SWITCHGEAR POWER
PP	PANEL
PR	PRESETTING RELAY (TIMER) POUNDS
PROP	PROPOSED
PSI	PER SQUARE INCH POTENTIAL
PT	TRANSFORMER
PTT	PUSH TO TEST
PVC	POLYVINYL CHLORIDE
PWR	POWER
R	RELAY
REV	REVERSE
REQD	REQUIRED
RGS	RIGID GALVANIZED STEEL
RLY	RELAY
RS	RIGID STEEL
RVNR	REDUCED VOLTAGE NON–REVERSING REDUCE
RVR	VOLTAGE REVERSING
RVSS	REDUCE VOLTAGE SOLID STATE RESISTANCE
RTD	TEMP DETECTORS
RTU	REMOTE TERMINAL UNIT
S, SV	SOLENOID VALVE
SC	SHORT CIRCUIT
SCR	SECURITY CARD READER
SCCR	CURRENT RATING
SCADA	SUPERVISORY CONTROL AND DATA ACQUISITION
SCU	SPEED CONTROL UNIT
SF	SUPPLY FAN
SPD	SURGE PROTECTIVE DEVICE
SRV	SURGE RELIEF VALVE
SS	STAINLESS STEEL
SW	NETWORK SWITCH
SWG	SWITCHGEAR
SWT	SWITCH
T	THERMOSTAT
TB	TERMINAL BOX
TD	TIME DELAY
TDC	TIME DELAY CLOSING
TDE	TIME DELAY ENERGIZED
TDO	TIME DELAY OPENING
TJB	TERMINAL JUNCTION BOX
TMG	TELECOMMUNICATION MASTER GROUND
TP	TWISTED PAIR
TRN OR	TRANSFORMER
TX TSC	VALVE TORQUE SWITCH CLOSE DIRECTION
TSO	VALVE TORQUE SWITCH OPEN DIRECTION
TSP	TWISTED SHIELDED PAIR
TST	TWISTED SHIELDED TRIAD
TVSS	TRANSIENT VOLTAGE SURGE SUPPRESSOR
UG	UNDERGROUND
UGT	UNDERGROUND TELEPHONE
UH	UNIT HEATER
UPS	UNINTERRUPTIBLE POWER SUPPLY
UV	UNDERVOLTAGE
V	VOLT
VCB	VACUUM CIRCUIT BREAKER
VCR	VALVE CLOSE RELAY
VF	VARIABLE FREQUENCY
VFD	VARIABLE FREQUENCY DRIVE
VM	VOLTMETER
VP	VAPOR PROOF
VOR	VALVE OPEN RELAY
VS	VOLT METER SWITCH
W	WIRE
WHD	WATT HOUR DEMAND METER
WP	WEATHER PROOF
XFMR	TRANSFORMER

CP&Y, INC.
TBPE FIRM REGISTRATION NO. F–1741

CITY OF AUSTIN – AUSTIN WATER
HORNSBY BEND BMP CENTRIFUGES

ELECTRICAL NOTES, ABBREVIATIONS, SYMBOLS & LEGENDS

NO.	REVISION	BY	DATE

VERIFY SCALE 0 1"
BAR IS ONE INCH ON ORIGINAL DRAWING. IF NOT ONE INCH ON THIS SHEET, ADJUST SCALE

Date: MAY 2021
Designed: K.BARNES
Drawn: S.MEDINA
Reviewed: G.ROBINSON
CP&Y Proj. AUST1600646.01

SHEET
E–1

REFERENCES: _CPY_Standard_Border_Base.dwg _Std ENVIRO SEALS
May 20, 2021 – 2:50pm C:\pwworking\cpy\pw_cpy\gleuenberger\d0795251\AUST1600646.01_7_E–01_CPY.dwg

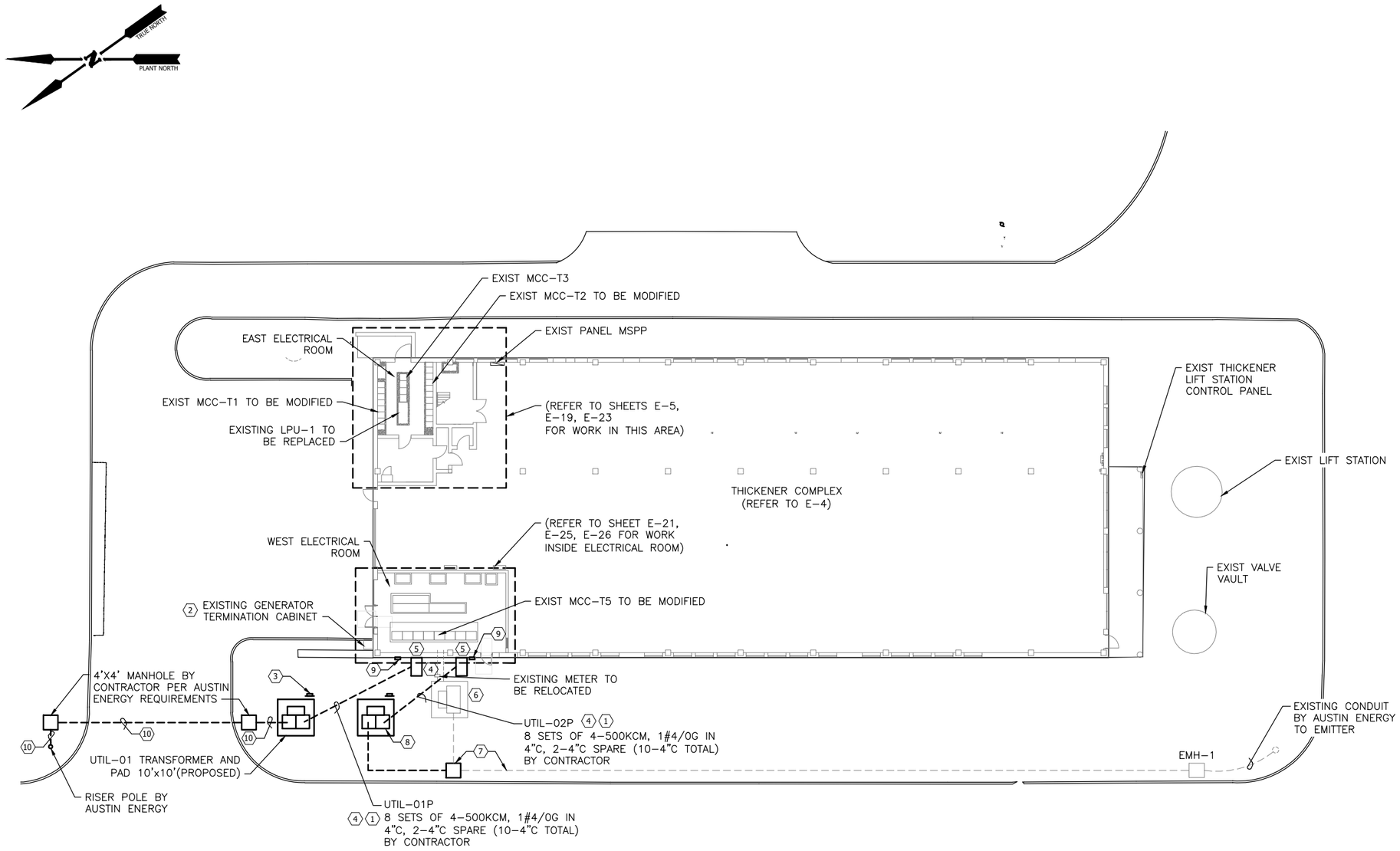

EXISTING SITE PLAN - MODIFICATIONS

16 8 0 16
SCALE IN FEET

GENERAL NOTES

1. THE CONTRACTOR SHALL COORDINATE ALL WORK WITH AUSTIN ENERGY.
2. SEE STRUCTURAL SHEETS FOR EQUIPMENT PAD DETAILS.
3. THIS IS AN ACTIVE FACILITY THAT MUST MAINTAIN OPERATION. PROTECT ELECTRICAL AND CONTROL EQUIPMENT DURING ALL CONSTRUCTION ACTIVITIES FROM DUST AND DEBRIS.
4. CONTRACTOR SHALL BE RESPONSIBLE FOR REMOVING, REPA IRING AND REINSTALLING ALL CIVIL INCLUDING FLATWORK REQUIRED TO INSTALL UTILITY POWER.
5. INSTALL PERMANENT IDENTIFICATION FOR ALL TRANSFORMERS, METERS, METER SOCKETS, AND DISCONNECTS IN ACCORDANCE WITH THE AUSTIN ENERGY DESIGN CRITERIA MANUAL SECTION 1.9.1.7.

NOTES BY SYMBOL (X)

1. INSTALL UNDERGROUND FROM TRANSFORMER INTO THE BOTTOM OF THE SWITCHBOARD. INSTALL CONDUIT WITH EXPANSION/DEFLECTION FITTING AND CONDUCTORS BETWEEN THE SWITCHBOARD AND EXISTING BUILDING MOUNTED JUNCTION BOX. PULL 8 SETS OF CONDUCTORS THROUGH THE EXISTING CONDUITS TO MCC–T5. EXPANSION FITTINGS SHALL BE CROUSE–HINDS CAT# XJG104SA TO MATCH EXISTING USED AT UTIL–02.
2. REMOVE AND REPLACE CONDUIT AND CONDUCTORS BETWEEN GENERATOR TERMINATION BOX AND MCC–T5. INSTALL GEN–01P [(2) SETS OF 4–500KCM, 1#1G IN 4"C] OF SUFFICIENT LENGTH TO TERMINATE AT MCC–T5 GENERATOR BREAKER. REFER TO MODIFIED MCC–T5 ELEVATION.
3. PROVIDE AND INSTALL METER AND ELECTRICAL RACK TO MATCH EXISTING. RUN 1–1/2" CONDUIT BETWEEN METER AND TRANSFORMER CT.
4. REMOVE AND REPLACE EXISTING SIDEWALKS AND FLATWORK AS REQUIRED TO INSTALL TRANSFORMER, UG PRIMARY, AND SERVICE ENTRANCE CONDUITS.
5. PROPOSED CUSTOM SQUARE D QED2 SWITCHBOARD WITH 2500A RF DRAW OUT CIRCUIT BREAKER. BREAKER TO MATCH EXISTING IN MCC–T5. NEMA 4X STAINLESS STEEL CONSTRUCTION. BOTTOM ENTRY, SIDE ACCESS PANELS, SINGLE SECTION, 38"Wx60"D (TYP. OF 2). SWITCHBOARDS SHALL SERVE AS THE BUILDING'S NEW SERVICE ENTRANCES. GROUND PER THE NEC AND AUSTIN ENERGY REQUIREMENTS.
6. EXISTING UTIL–02 TRANSFORMER, CONDUITS TO WALL MOUNTED JUNCTION BOX, AND TRANSFORMER PAD TO BE REMOVED AS PART PHASED CONSTRUCTION.
7. REMOVE EXISTING PRIMARY CONDUCTORS AND INSTALL MANHOLE IN EXISTING DUCT SYSTEM. EXIT MANHOLE WITH 2–4" CONCRETE ENCASED CONDUITS TO NEW TRANSFORMER. INSTALL NEW PRIMARY CABLES.
8. NEW TRANSFORMER UTIL–02 AND PAD. RELOCATE EXISTING METER.
9. EXISTING WALL–MOUNTED JUNCTION BOX. INSTALL 10–4"C BETWEEN JUNCTION BOX AND ADJACENT SWITCHBOARD .
10. CONTRACTOR TO INSTALL 2–4"C CONCRETE ENCASED FROM RISER POLE (LOCATION DETERMINED BY AUSTIN ENERGY) TO TRANSFORMER. PRIMARY CABLES BY AUSTIN ENERGY. SAWCUT DRIVEWAY TO OPEN TRENCH AND REPAIR AS REQUIRED.

CP&Y, INC.
TBPE FIRM REGISTRATION NO. F–1741

CITY OF AUSTIN ESTD 1839 PROMOTED

STATE OF TEXAS GERALD P. ROBINSON, JR. 112423 LICENSED PROFESSIONAL ENGINEER 06/27/2021

NO.	REVISION	BY	DATE

VERIFY SCALE 0 1" BAR IS ONE INCH ON ORIGINAL DRAWING. IF NOT ONE INCH ON THIS SHEET, ADJUST SCALE

CITY OF AUSTIN – AUSTIN WATER
HORNSBY BEND BMP CENTRIFUGES

ELECTRICAL SITE PLAN MODIFICATIONS

Date: MAY 2021
Designed: D. BARNES
Drawn: G.LEUENBERGER
Reviewed: G.ROBINSON, P.E.
CP&Y Proj: AUST1600646.01

SHEET
E–2

REFERENCES: AUST1600646.01 Border Base.dwg __Std ENVIRO SEALS.dwg AUST1600646.01_E_Elec–Room.dwg AUST1600646.01_E_SURVEY.dwg AUST1600646.01_E_ABase.dwg AUST1600646.01_E_Elec–Base
Aug 12, 2021 – 8:50am C:\pwworking\cpy\pw_cpy\gleuenberger\d0795251\AUST1600646.01_7_E–02_CPY.dwg

GENERAL NOTES

1. REFER TO STRUCTURAL AND MECHANICAL SHEETS FOR ADDITIONAL INFORMATION.
2. FOR ALL CONCEALED CONDUIT DEMOLITION GRIND FLUSH WITH SLAB AND FILL WITH GROUT AT THE EQUIPMENT AND AT THE MCC.
3. DEMOLISH ALL UNUSED CONDUCTORS. REMOVE CONDUIT FLUSH WITH CONCRETE, GRIND SMOOTH AND FILL WITH GROUT.
4. CONTRACTOR SHALL VERIFY ALL DEMOLITION WORK WITH ENGINEER PRIOR TO BEGINNING WORK.
5. THIS IS AN ACTIVE FACILITY THAT MUST MAINTAIN OPERATION. PROTECT ELECTRICAL AND CONTROL EQUIPMENT DURING ALL CONSTRUCTION ACTIVITIES FROM DUST AND DEBRIS.
6. PER THE COA'S ASBESTOS SURVEY REPORTS, THERE IS "NO ASBESTOS DETECTED" (NAD) IN THE AREAS OF THE BUILDING WHERE THE PROJECTED WORK WILL BE UPGRADED. NO ASBESTOS WAS DETECTED IN THE WINDOWS CAULK, CMU WALLS, PUMPS, ACCESSIBLE PUMPS GASKETS AND ALL ASSOCIATED PIPING AND INSULATION. NO FILL MATERIAL WAS DISCOVERED IN THE AREAS WHERE THE CMU WILL BE REPAIRED/REPLACED OR REMOVED.
7. PER THE COA'S LEAD BASE PAINT SURVEY REPORTS, THE LEAD BASE PAINT SAMPLES COLLECTED AND ANALYZED FROM THE PUMPING EQUIPMENT AND ASSOCIATED PIPES, THERMAL PIPE INSULATION; AND PAINTED METAL GAS LINES THAT RUNS ALONG THE INTERIOR WALLS NEAR THE CEILING ARE ALL BELOW THE US EPA HUD GUIDELINES FOR LEAD BASE PAINT. PROPER WORK PRACTICES AND PPE IS REQUIRED WHERE ANY CUTTING AND OR SAWING TAKES PLACE.

NOTES BY SYMBOL (X)

1. DEMOLISH HB-TC-GBT-001 AND HB-TC-GBT-002. REMOVE ALL CONDUITS AND CONDUCTORS FROM MCC TO EQUIPMENT. MARK BREAKERS SPARE.
2. REMOVE EXISTING PUMP, EXISTING WIRING TO REMAIN.
3. HB-TC-SLP-001 AND HB-TC-SLP-002 TO BE DEMOLISHED.
4. HB-TC-SLP-009 TO BE DEMOLISHED.
5. HB-TC-NP-001 TO REMAIN.
6. REMOVE, RELOCATE AND RECIRCUIT RECEPTACLES AND ASSOCIATED HEATERS. RELOCATE TO AVOID CONFLICT WITH NEW OVERHEAD DOOR.

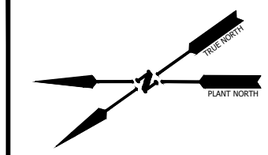

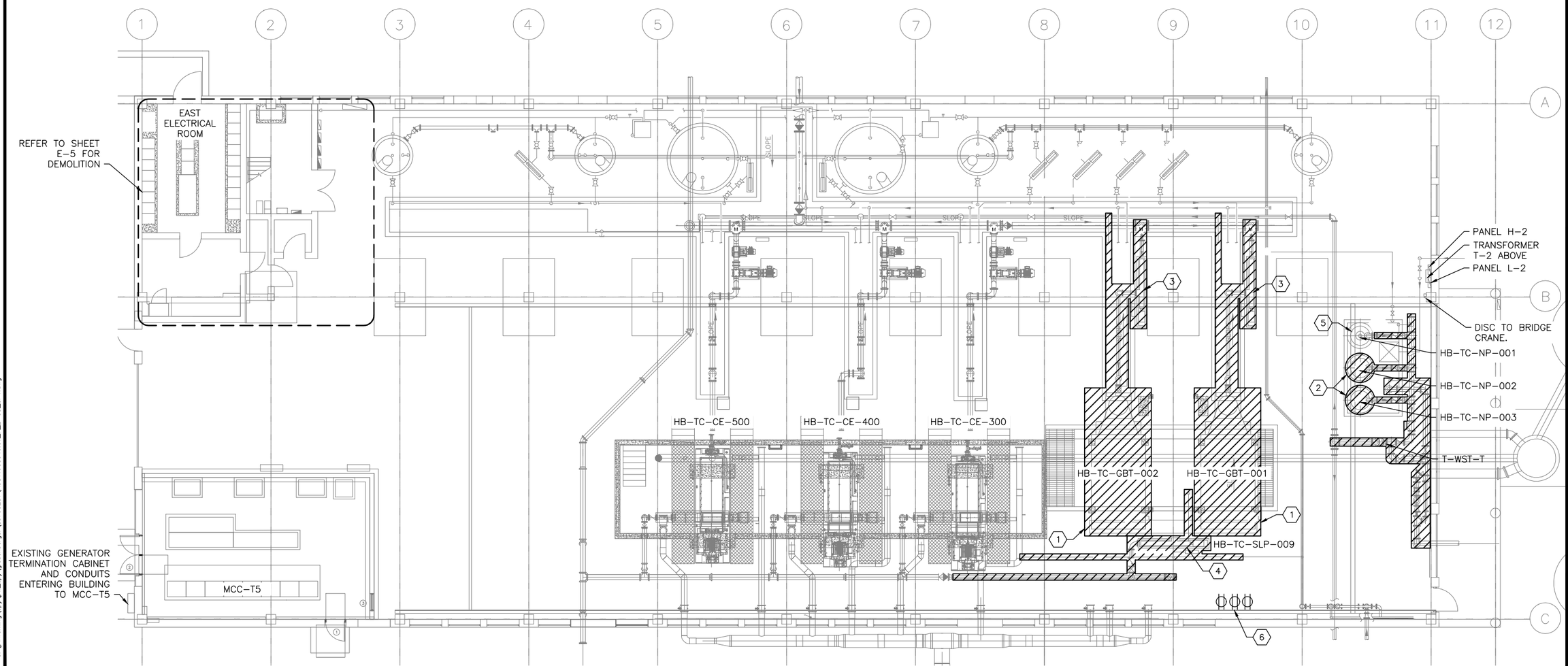

ELECTRICAL DEMOLITION PLAN

8 4 0 8
SCALE IN FEET

CP&Y, INC.
TBPE FIRM REGISTRATION NO. F-1741

CITY OF AUSTIN EST. 1839 EMPLOYED

STATE OF TEXAS
GERALD P. ROBINSON, JR.
112423
LICENSED PROFESSIONAL ENGINEER
08/27/2021

NO.	REVISION	BY	DATE

VERIFY SCALE 0 1"
BAR IS ONE INCH ON ORIGINAL DRAWING. IF NOT ONE INCH ON THIS SHEET, ADJUST SCALE

CITY OF AUSTIN – AUSTIN WATER
HORNSBY BEND BMP CENTRIFUGES

THICKENER COMPLEX ELECTRICAL DEMOLITION PLAN

Date: MAY 2021
Designed: D. BARNES
Drawn: G.LEUENBERGER
Reviewed: G.ROBINSON, P.E.
CP&Y Proj: AUST1600646.01

SHEET
E-3

REFERENCES: AUST1600646.01 Border Base.dwg _Std ENVIRO SEALS.dwg AUST1600646.01_E_Elec-Room.dwg AUST1600646.01_E_MBase.dwg AUST1600646.01_E_SBase.dwg
Jun 01, 2021 – 11:21am C:\pwworking\cpy\gw_cpy\gleuenberger\d0795251\AUST1600646.01_7_E-03_CPY.dwg AUST1600646.01_E_HBase.dwg AUST1600646.01_E_ABase.dwg AUST1600646.01_E_Elec-Base

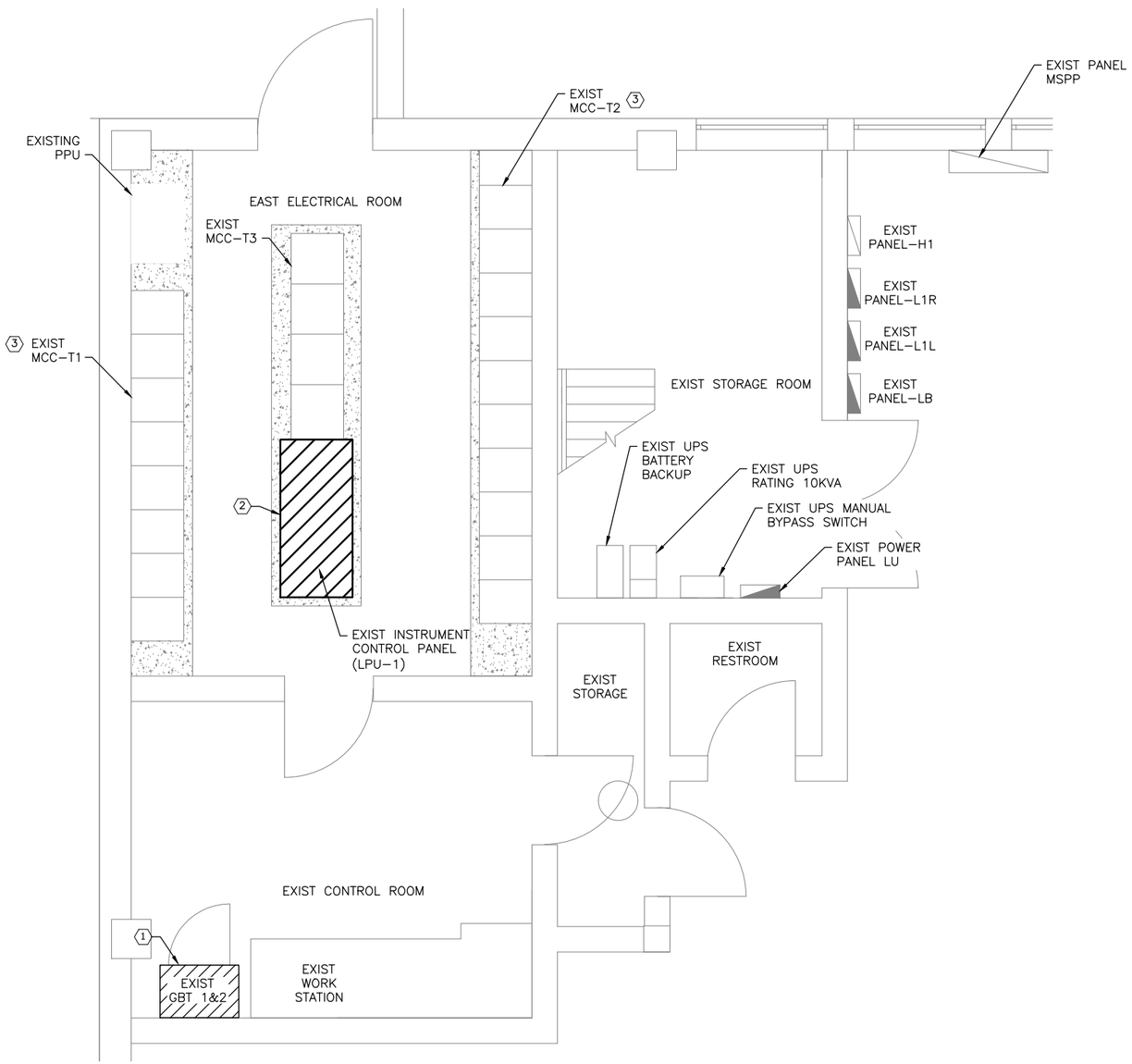

1ST FLOOR EAST ELECTRICAL ROOM & CONTROL ROOM DEMOLITION

2 1 0 4
SCALE IN FEET

NOTES BY SYMBOL (X)

1. REMOVE GRAVITY BELT THICKENER CONTROL PANEL.
2. REMOVE EXISTING CONTROL PANEL LPU–01. IDENTIFY, LABEL, PULL BACK AND PRESERVE FIELD CONDUCTORS TO BE TERMINATED IN NEW PANEL.
3. REMOVE MCC BUCKETS AS REQUIRED. REFER TO ONE LINES AND MCC ELEVATIONS.

GENERAL NOTES

1. CONTRACTOR SHALL VERIFY ALL DEMOLITION WORK WITH ENGINEER PRIOR TO BEGINNING WORK.
2. REFER TO STRUCTURAL AND MECHANICAL SHEETS FOR ADDITIONAL INFORMATION.
3. FOR ALL CONCEALED CONDUIT DEMOLITION GRIND FLUSH WITH SLAB AND FILL WITH GROUT AT THE EQUIPMENT AND AT THE MCC.
4. DEMOLISH ALL UNUSED CONDUCTORS. REMOVE CONDUIT FLUSH WITH CONCRETE, GRIND SMOOTH AND FILL WITH GROUT.
5. THIS IS AN ACTIVE FACILITY THAT MUST MAINTAIN OPERATION. PROTECT ELECTRICAL AND CONTROL EQUIPMENT DURING ALL CONSTRUCTION ACTIVITIES FROM DUST AND DEBRIS.
6. PER THE COA'S ASBESTOS SURVEY REPORTS, THERE IS "NO ASBESTOS DETECTED" (NAD) IN THE AREAS OF THE BUILDING WHERE THE PROJECTED WORK WILL BE UPGRADED. NO ASBESTOS WAS DETECTED IN THE WINDOWS CAULK, CMU WALLS, PUMPS, ACCESSIBLE PUMPS GASKETS AND ALL ASSOCIATED PIPING AND INSULATION. NO FILL MATERIAL WAS DISCOVERED IN THE AREAS WHERE THE CMU WILL BE REPAIRED/REPLACED OR REMOVED.
7. PER THE COA'S LEAD BASE PAINT SURVEY REPORTS, THE LEAD BASE PAINT SAMPLES COLLECTED AND ANALYZED FROM THE PUMPING EQUIPMENT AND ASSOCIATED PIPES, THERMAL PIPE INSULATION; AND PAINTED METAL GAS LINES THAT RUNS ALONG THE INTERIOR WALLS NEAR THE CEILING ARE ALL BELOW THE US EPA HUD GUIDELINES FOR LEAD BASE PAINT. PROPER WORK PRACTICES AND PPE IS REQUIRED WHERE ANY CUTTING AND OR SAWING TAKES PLACE.

CP&Y, INC.
TBPE FIRM REGISTRATION NO. #F–1741

CITY OF AUSTIN EST. 1839 EMPLOYED

STATE OF TEXAS
GERALD P. ROBINSON, JR.
112423
LICENSED
PROFESSIONAL ENGINEER
08/27/2021

NO.	REVISION	BY	DATE

VERIFY SCALE 0 1"
BAR IS ONE INCH ON ORIGINAL DRAWING. IF NOT ONE INCH ON THIS SHEET, ADJUST SCALE

CITY OF AUSTIN – AUSTIN WATER
HORNSBY BEND BMP CENTRIFUGES

EAST ELECTRICAL ROOM & CONTROL ROOM DEMOLITION PLAN

Date: MAY 2021
Designed: G. ROBINSON, P.E.
Drawn: G. LEUENBERGER
Reviewed: G. ROBINSON, P.E.
CP&Y Proj: AUST1600646.01

SHEET
E–4

REFERENCES: AUST1600646.01 Border Base.dwg _Std ENVIRO SEALS.dwg AUST1600646.01_E_ABase.dwg AUST1600646.01_E_Elec–Room.dwg AUST1600646.01_E_Elec–POWER
Jun 01, 2021 – 11:28am C:\pwworking\cpy\gw_cpy\gleuenberger\d0795251\AUST1600646.01_7_E–04_CPY.dwg AUST1600646.01_E_HBase 2.dwg AUST1600646.01_E_HVAC 2.dwg AUST1600646.01_E_ABase2.dwg

CONDUIT TAG	CONDUIT SIZE	CONDUCTOR SIZE	ROUTING		COMMENT
			FROM	to	
UTIL01-01P	4"	8 (4-500KCM, 1-#4/0G), 2-SPARE	TRANSFORMER UTIL01	MCCT5	
UTIL02-01P	4"	8 (4-500KCM, 1-#4/0G), 2-SPARE	TRANSFORMER UTIL02	MCCT5	
GEN-01P	4"	2 SETS OF 4-500KCM, 1#1G	GENERATOR TERMINATION BOX	MCCT5	
MCCT5-MCCT6-01P	4"	2 SETS OF 4-500KCM, 1-#3/0G	MCC-T5	MCC-T6	
MCCT5-MCCT6-02P	4"	2 SETS OF 4-500KCM, 1-#3/0G	MCC-T5	MCC-T6	
MCCT5-MCP-100-03P	4" (EXISTING)	2 SETS OF 3-350KCM, 1-#1G	MCC-T5	CENTRIFUGE 1 MOTOR STARTER PANEL HB-TC-MCP-100	NEW CONDUCTORS, EXISTING CONDUIT
MCCT5-MCP-200-03P	4" (EXISTING)	2 SETS OF 3-350KCM, 1-#1G	MCC-T5	CENTRIFUGE 2 MOTOR STARTER PANEL HB-TC-MCP-200	NEW CONDUCTORS, EXISTING CONDUIT
HB-TC-MCP-100-01P	3"	3-250MCM, 1#2G	CENTRIFUGE 1 MOTOR STARTER PANEL	CENTRIFUGE 1 SCROLL DRIVE	
HB-TC-MCP-100-02P	1-1/2"	3#8, 1#8G	CENTRIFUGE 1 MOTOR STARTER PANEL	CENTRIFUGE 1 BAACKL DRIVE	
MCCT6-SLP-101-01P	2"	3#1/0, 1#6G	MCC-T6	DISCHAGE PUMP 1	
HB-TC-MCP-200-01P	3"	3-250MCM, 1#2G	CENTRIFUGE 2 MOTOR STARTER PANEL	CENTRIFUGE 2 SCROLL DRIVE	
HB-TC-MCP-200-02P	1-1/2"	3#8, 1#8G	CENTRIFUGE 2 MOTOR STARTER PANEL	CENTRIFUGE 2 BAACKL DRIVE	
MCCT6-SLP-201-01P	2"	3#1/0, 1#6G	MCC-T6	DISCHAGE PUMP 2	
MCCT6-SLP-100-01P	1-1/2"	3#2, 1#8G	MCC-T6	THICKENED FEED PUMP 1	
MCCT6-MRT-100-01P	1-1/2"	3#8, 1#8G	MCC-T6	MACERATOR 1 CONTROL PANEL	
MCCT6-SLP-200-01P	1-1/2"	3#2, 1#8G	MCC-T6	THICKENED FEED PUMP 2	
MCCT6-MRT-200-01P	1-1/2"	3#8, 1#8G	MCC-T6	MACERATOR 2 CONTROL PANEL	
LPT5-PV-TC01-011-01P	1"	3#10, 1#10G	LP-T5	SOLIDS FEED PLUG VALVE ACTUATOR 1	
LPT5-PV-TC01-021-01P	1"	3#10, 1#10G	LP-T5	SOLIDS FEED PLUG VALVE ACTUATOR 2	
LPT5-PV-TC01-031-01P	1"	3#10, 1#10G	LP-T5	SOLIDS FEED PLUG VALVE ACTUATOR 3	
LPT5-PV-TC01-041-01P	1"	3#10, 1#10G	LP-T5	SOLIDS FEED PLUG VALVE ACTUATOR 4	
LPT5-PV-TC01-051-01P	1"	3#10, 1#10G	LP-T5	SOLIDS FEED PLUG VALVE ACTUATOR 5	
MCCT6-OL1-01P	1"	3#10, 1#10G	MCC-T6	OIL LUBE SYSTEM 1	
MCCT6-OL2-01P	1"	3#10, 1#10G	MCC-T6	OIL LUBE SYSTEM 2	
LPT5-100-01P	1"	3#10	LP-T5	FIT-TC01-03A1, AIT-TC01-100, AIT-TC01-101	
LPT5-100-02P	1"	3#10	LP-T5	LIT-TC01-101, CENTRIFUGE 1 LOP/OIU	
LPT5-200-01P	1"	3#10	LP-T5	FIT-TC01-03A2, AIT-TC01-200, AIT-TC01-101	
LPT5-200-02P	1"	3#10	LP-T5	LIT-TC01-201, CENTRIFUGE 2 LOP/OIU	
HB-TC-EPC-100-01P	1-1/2"	3#8, 1#8G	HB-TC-MCP-100	EASY POND 1 CONTROL PANEL	
HB-TC-EPC-200-01P	1-1/2"	3#8, 1#8G	HB-TC-MCP-200	EASY POND 2 CONTROL PANEL	
HB-LS-01C	1"	2#14 + G	LPTU-1	EXISTING LIFT STATION CONTROL PANEL	
HB-LS-02C	1"	5-2#16 TSP + G	LPTU-1	EXISTING LIFT STATION CONTROL PANEL	
LCP-100-MJB1-C120	2"	36#14 + G	CETRIFUGE 1 LOCAL CONTROL PANEL	MACERATOR 1 JUCTION BOX (120V)	
LCP-100-SJB1-CmA	2"	5-2#16 TSP + G	CETRIFUGE 1 LOCAL CONTROL PANEL	SOLIDS DENSITY METER JUNCTION BOX (ANALOG)	
LCP-100-OJB1-C120	2"	20#14 + G	CETRIFUGE 1 LOCAL CONTROL PANEL	OLL LUBE SYSTEM JUNCTION BOX (120V)	
LCP-100-EJB1-C120	2"	8#14 + G	CETRIFUGE 1 LOCAL CONTROL PANEL	EASY POND 1 JUNCTION BOX (120V)	
LCP-100-EJB1-C24	2"	8#14 + G	CETRIFUGE 1 LOCAL CONTROL PANEL	EASY POND 1 JUNCTION BOX (24V)	
LCP-100-DJB1-C120	2"	8#14 + G	CETRIFUGE 1 LOCAL CONTROL PANEL	DISCHARGE 1 JUNCTION BOX (120V)	
LCP-100-DJB1-CmA	2"	2-#16 TRIAD + G, 2#16 TSP + G,	CETRIFUGE 1 LOCAL CONTROL PANEL	DISCHARGE 1 JUNCTION BOX (ANALOG)	
LCP-100-CJB1-CmA	2"	4-#16 TRIAD SH + G, 2#16 TSP + G	CETRIFUGE 1 LOCAL CONTROL PANEL	CENTRIFUGE 1 JUNCTION BOX (ANALOG)	
LCP-100-CJB1-C120	2"	20#14 + G	CETRIFUGE 1 LOCAL CONTROL PANEL	CENTRIFUGE 1 JUNCTION BOX (120V)	
LCP-100-CJB1-C24	2"	12#14 + G	CETRIFUGE 1 LOCAL CONTROL PANEL	CENTRIFUGE 1 JUNCTION BOX (24V)	
LCP-100-C6JB1	2"	3 CAT6	CETRIFUGE 1 LOCAL CONTROL PANEL	CENTRIFUGE 1 JUNCTION BOX (CAT6)	
LCP-200-MJB1-C120	2"	36#14 + G	CETRIFUGE 2 LOCAL CONTROL PANEL	MACERATOR 2 JUCTION BOX (120V)	
LCP-200-SJB1-CmA	2"	5-2#16 TSP + G	CETRIFUGE 2 LOCAL CONTROL PANEL	SOLIDS DENSITY METER JUNCTION BOX (ANALOG)	
LCP-200-OJBA1-C120	2"	20#14 + G	CETRIFUGE 2 LOCAL CONTROL PANEL	OLL LUBE SYSTEM 2 JUNCTION BOX (120V)	
LCP-200-EJB1-C24	2"	8#14 + G	CETRIFUGE 2 LOCAL CONTROL PANEL	EASY POND 2 JUNCTION BOX (24V)	
LCP-200-EJB1-C120	2"	8#14 + G	CETRIFUGE 2 LOCAL CONTROL PANEL	EASY POND 2 JUNCTION BOX (120V)	
LCP-200-DJB1-C120	2"	8#14 + G	CETRIFUGE 2 LOCAL CONTROL PANEL	DISCHARGE 2 JUNCTION BOX (120V)	
LCP-200-DJB1-CmA	2"	2-#16 TRIAD + G, 2#16 TSP + G,	CETRIFUGE 2 LOCAL CONTROL PANEL	DISCHARGE 2 JUNCTION BOX (ANALOG)	
LCP-200-CJB1-CmA	2"	4-#16 TRIAD SH + G, 2#16 TSP + G	CETRIFUGE 2 LOCAL CONTROL PANEL	CENTRIFUGE 2 JUNCTION BOX (ANALOG)	
LCP-200-CJB1-C120	2"	20#14 + G	CETRIFUGE 2 LOCAL CONTROL PANEL	CENTRIFUGE 2 JUNCTION BOX (120V)	
LCP-200-CJB1-C24	2"	12#14 + G	CETRIFUGE 2 LOCAL CONTROL PANEL	CENTRIFUGE 2 JUNCTION BOX (24V)	
LCP-200-C6JB1	2"	3 CAT6	CETRIFUGE 2 LOCAL CONTROL PANEL	CENTRIFUGE 2 JUNCTION BOX (CAT6)	
PV-TC01-011-01C	1"	14#14 + G	MJB1-C120	SOLIDS FEED PLUG VALVE 1 ACTUATOR	
HB-TC-MRT-100-01C	1"	16#14 + G	MJB1-C120	MACERATOR 1 CONTROL PANEL	
HB-TC-SLP-100-01C	1"	6#14 + G	MJB1-C120	THICKENEER FEED PUMP	
FIT-TC01-03A1-01C	3/4"	2#16 TSP + G	SJB1-CmA	SLUDGE FLOWMETER 1	
AIT-TC01-100-01C	3/4"	2#16 TSP + G	SJB1-CmA	SLUDGE DENSITY METER 1	
FIT-TC01-04A1-01C	3/4"	2#16 TSP + G	SJB1-CmA	POLYMER FEED FLOWMETER 1	

CP&Y, INC.
TBPE FIRM REGISTRATION NO. F-1741

CITY OF AUSTIN ESTD. 1839 EMPLOYED

STATE OF TEXAS GERALD P. ROBINSON, JR. 112423 LICENSED PROFESSIONAL ENGINEER 08/27/2021

NO.	REVISION	BY	DATE

VERIFY SCALE 0 1" BAR IS ONE INCH ON ORIGINAL DRAWING. IF NOT ONE INCH ON THIS SHEET, ADJUST SCALE

CITY OF AUSTIN – AUSTIN WATER
HORNSBY BEND BMP CENTRIFUGES

ELECTRICAL CABLE AND CONDUIT SCHEDULES (SHEET 1 OF 2)

Date: MAY 2021
Designed: D. BARNES
Drawn: G.LEUENBERGER
Reviewed: G.ROBINSON, P.E.
CP&Y Proj. AUST1600646.01

SHEET
E–5

REFERENCES: AUST1600646.01 Border Base.dwg __Std ENVIRO SEALS
Aug 19, 2021 – 10:39am C:\pwworking\cpy\pw_cpy\pbaznik\d0795251\AUST1600646.01_7_E-05_CPY.dwg

CONDUIT TAG	CONDUIT SIZE	CONDUCTOR SIZE	ROUTING		COMMENT
			FROM	to	
FSL-TC01-011-01C	3/4"	2#14 + G	OJB1-C120	LUBE UNIT 1 FEED END FLOW	
FSL-TC01-012-01C	3/4"	2#14 + G	OJB1-C120	LUBE UNIT 1 EASY POND FLOW	
FSL-TC01-013-01C	3/4"	2#14 + G	OJB1-C120	LUBE UNIT 1 DRIVE END FLOW	
PMP-TC01-011-01C	1f"	12#14 + G	OJB1-C120	LUBE PUMP 1	
PSH-TC01-012-01C	3/4"	2#14 + G	OJB1-C120	LUBE UNIT 1 PRESSURE	
PSH-TC01-013-01C	3/4"	2#14 + G	OJB1-C120	LUBE UNIT 1 FILTER PRESSURE	
SV-TC01-011-01C	3/4"	2#14 + G	OJB1-C120	CENTRIFUGE 1 BEARING LUBE COOLING SOLENOID VALVE	
LSH-TC01-011-01C	3/4"	2#14 + G	DJB1-C120	DISCHARGE CHITE 1 LEVEL SWITCH	
PSH-TC01-011-01C	3/4"	2#14 + G	DJB1-C120	DISCHARGE 1 PRESSURE SWITHC	
LIT-TC01-011-01C	3/4"	2#16 TSP + G	DJB1-CmA	DISCHARGE SOLIDS CHUTE 1 LEVEL SWITCH	
TSH-TC01-011-01C	3/4"	2#16 TSP + G	DJB1-CmA	DISCHARGE PUMP 1 STATOR THERMISTER	
AIT-TC01-011-01C	3/4"	2#16 TSP + G	DJB1-CmA	DISCHARGE 1 DENSITY METER	
HB-TC-CE-100-01C	1"	#16 TRIAD SH +G	CJB1-CmA	FEED END VIBRATION MONITOR	
HB-TC-CE-100-02C	1"	#16 TRIAD SH +G	CJB1-CmA	DRIVE END VIBRATION MONITOR	
HB-TC-CE-100-03C	3/4"	2#16 TSP + G	CJB1-CmA	BOWL SPEED SENSOR	
HB-TC-CE-100-04C	3/4"	2#16 TSP + G	CJB1-CmA	FEED END BEARING TEMP	
HB-TC-CE-100-05C	3/4"	2#16 TSP + G	CJB1-CmA	DRIVE END BEARING TEMP	
HB-TC-CE-100-06C	3/4"	2#14 + G	CJB1-C24	CENTRIFUGE 1 COVER SWITCH 1	
HB-TC-CE-100-07C	3/4"	2#14 + G	CJB1-C24	CENTRIFUGE 1 COVER SWITCH 2	
HB-TC-CE-100-08C	3/4"	2#14 + G	CJB1-C24	CENTRIFUGE 1 ALARM HORN & LIGHT	
HB-TC-CE-100-09C	3/4"	2#14 + G	CJB1-C120	CENTRIFUGE 1 WASHWATER SOLENOID VALVE	
HB-TC-CE-100-10C	3/4"	2#14 + G	CJB1-C120	CENTRIFUGE 1 MAIN DRIVE SPACE HEATER	
HB-TC-CE-100-11C	3/4"	CENTRIFUGE 1 LOP/OIU E-STOP+B101	CJB1-C120	CENTRIFUGE 1 MAIN DRIVE T-STATS	
HB-TC-CE-100-12C	3/4"	2#14 + G	CJB1-C120	CENTRIFUGE 1 SCROLL DRIVE SPACE HEATER	
HB-TC-CE-100-13C	3/4"	2#14 + G	CJB1-C120	CENTRIFUGE 1 SCROLL DRIVE T-STATS	
HB-TC-CE-100-14C	3/4"	4#14 + G	CJB1-C120	CENTRIFUGE 1 LOP/OIU E-STOP	
PV-TC02-011-01C	1"	14#14 + G	MJB2-C120	SOLIDS FEED PLUG VALVE 2 ACTUATOR	
HB-TC-MR2-200-01C	1"	16#14 + G	MJB2-C120	MACERATOR 2 CONTROL PANEL	
HB-TC-SLP-200-01C	1"	6#14 + G	MJB2-C120	THICKENEER FEED PUMP	
FIT-TC02-03A1-01C	3/4"	2#16 TSP + G	SJB2-CmA	SLUDGE FLOWMETER 2	
AIT-TC02-200-01C	3/4"	2#16 TSP + G	SJB2-CmA	SLUDGE DENSITY METER 2	
FIT-TC02-04A1-01C	3/4"	2#16 TSP + G	SJB2-CmA	POLYMER FEED FLOWMETER 2	
FSL-TC02-021-01C	3/4"	2#14 + G	OJB2-C120	LUBE UNIT 2 FEED END FLOW	
FSL-TC02-022-01C	3/4"	2#14 + G	OJB2-C120	LUBE UNIT 2 EASY POND FLOW	
FSL-TC02-023-01C	3/4"	2#14 + G	OJB2-C120	LUBE UNIT 2 DRIVE END FLOW	
PMP-TC02-021-01C	1f"	12#14 + G	OJB2-C120	LUBE PUMP 2	
PSH-TC02-022-01C	3/4"	2#14 + G	OJB2-C120	LUBE UNIT 2 PRESSURE	
PSH-TC02-023-01C	3/4"	2#14 + G	OJB2-C120	LUBE UNIT 2 FILTER PRESSURE	
SV-TC02-021-01C	3/4"	2#14 + G	OJB2-C120	CENTRIFUGE 2 BEARING LUBE COOLING SOLENOID VALVE	
LSH-TC02-021-01C	3/4"	2#14 + G	DJB2-C120	DISCHARGE CHITE 2 LEVEL SWITCH	
PSH-TC02-021-01C	3/4"	2#14 + G	DJB2-C120	DISCHARGE 2 PRESSURE SWITHC	
LIT-TC02-021-01C	3/4"	2#16 TSP + G	DJB2-CmA	DISCHARGE SOLIDS CHUTE 2 LEVEL SWITCH	
TSH-TC02-021-01C	3/4"	2#16 TSP + G	DJB2-CmA	DISCHARGE PUMP 2 STATOR THERMISTER	
AIT-TC02-021-01C	3/4"	2#16 TSP + G	DJB2-CmA	DISCHARGE 2 DENSITY METER	
HB-TC-CE-200-01C	1"	#16 TRIAD SH +G	CJB2-CmA	FEED END VIBRATION MONITOR	
HB-TC-CE-200-02C	1"	#16 TRIAD SH +G	CJB2-CmA	DRIVE END VIBRATION MONITOR	
HB-TC-CE-200-03C	3/4"	2#16 TSP + G	CJB2-CmA	BOWL SPEED SENSOR	
HB-TC-CE-200-04C	3/4"	2#16 TSP + G	CJB2-CmA	FEED END BEARING TEMP	
HB-TC-CE-200-05C	3/4"	2#16 TSP + G	CJB2-CmA	DRIVE END BEARING TEMP	
HB-TC-CE-200-06C	3/4"	2#14 + G	CJB2-C24	CENTRIFUGE 2 COVER SWITCH	
HB-TC-CE-200-07C	3/4"	2#14 + G	CJB2-C24	CENTRIFUGE 2 COVER SWITCH	
HB-TC-CE-200-08C	3/4"	2#14 + G	CJB2-C24	CENTRIFUGE 2 ALARM HORN & LIGHT	
HB-TC-CE-200-09C	3/4"	2#14 + G	CJB2-C120	CENTRIFUGE 2 WASHWATER SOLENOID VALVE	
HB-TC-CE-200-10C	3/4"	2#14 + G	CJB2-C120	CENTRIFUGE 2 MAIN DRIVE SPACE HEATER	
HB-TC-CE-200-11C	3/4"	CENTRIFUGE 1 LOP/OIU E-STOP+B101	CJB2-C120	CENTRIFUGE 2 MAIN DRIVE T-STATS	
HB-TC-CE-200-12C	3/4"	2#14 + G	CJB2-C120	CENTRIFUGE 2 SCROLL DRIVE SPACE HEATER	
HB-TC-CE-200-13C	3/4"	2#14 + G	CJB2-C120	CENTRIFUGE 2 SCROLL DRIVE T-STATS	
HB-TC-CE-200-14C	3/4"	4#14 + G	CJB2-C120	CENTRIFUGE 2 LOP/OIU E-STOP	
LCP-300-PV-031-01C	1"	14#14 + G	LCP-300	SOLIDS FEED PLUG VALVE 3 ACTUATOR	
LCP-400-PV-031-01C	1"	14#14 + G	LCP-400	SOLIDS FEED PLUG VALVE 4 ACTUATOR	
LCP-500-PV-031-01C	1"	14#14 + G	LCP-500	SOLIDS FEED PLUG VALVE 5 ACTUATOR	

CP&Y, INC.
TBPE FIRM REGISTRATION NO. F-1741

CITY OF AUSTIN ESTD. 1839 EMPLOYED

STATE OF TEXAS GERALD P. ROBINSON, JR. 112423 LICENSED PROFESSIONAL ENGINEER 08/27/2021

NO.	REVISION	BY	DATE

VERIFY SCALE 0 1" BAR IS ONE INCH ON ORIGINAL DRAWING. IF NOT ONE INCH ON THIS SHEET, ADJUST SCALE

CITY OF AUSTIN – AUSTIN WATER
HORNSBY BEND BMP CENTRIFUGES

ELECTRICAL CABLE AND CONDUIT SCHEDULES (SHEET 2 OF 2)

Date: MAY 2021
Designed: D. BARNES
Drawn: G.LEUENBERGER
Reviewed: G.ROBINSON, P.E.
CP&Y Proj. AUST1600646.01

SHEET
E–6

REFERENCES: AUST1600646.01 Border Base.dwg _Std ENVIRO SEALS
Aug 19, 2021 – 10:39am C:\pwworking\cpy\pw_cpy\pbaznik\d0795251\AUST1600646.01_7_E-06_CPY.dwg

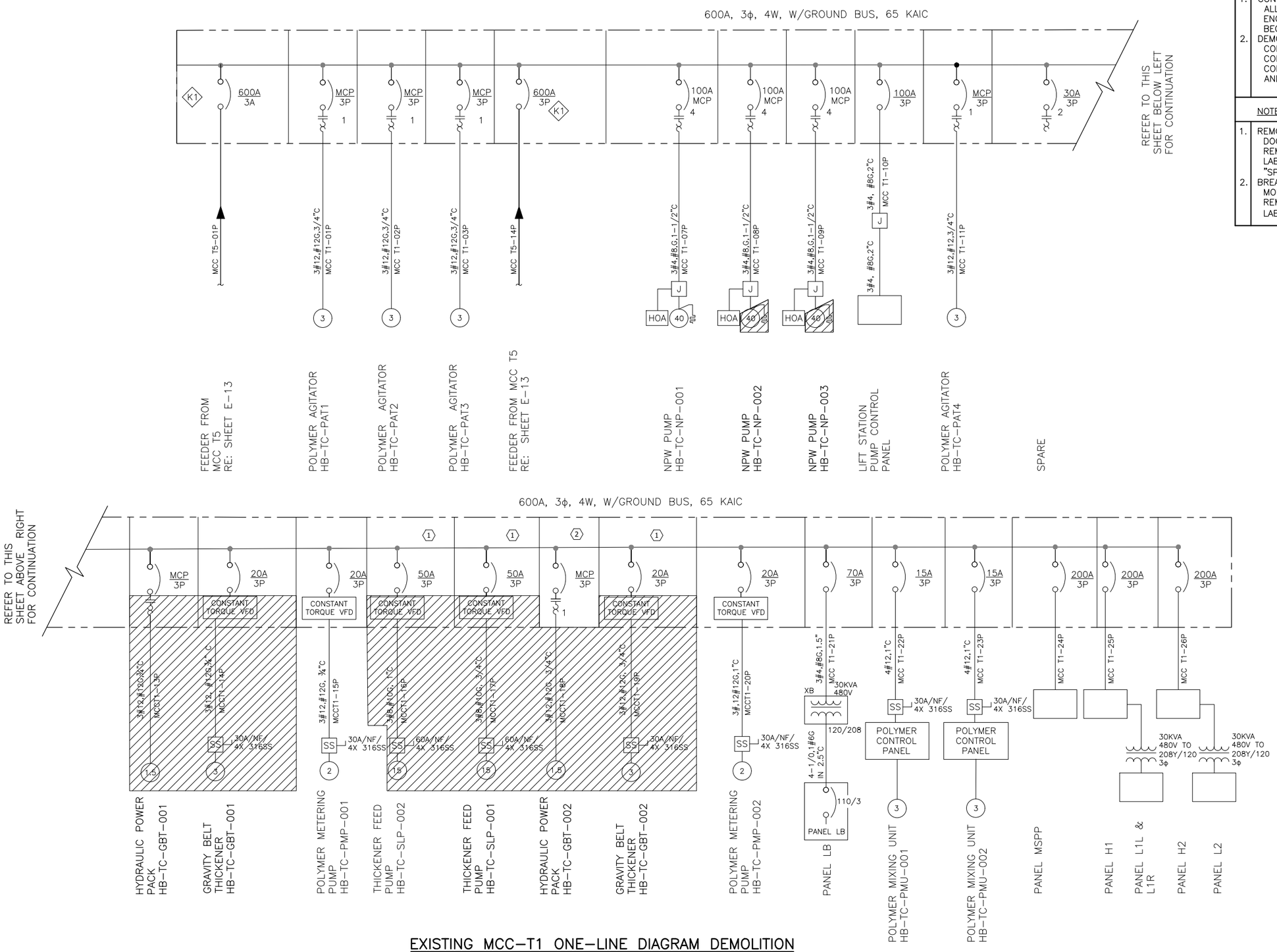

EXISTING MCC-T1 ONE-LINE DIAGRAM DEMOLITION

GENERAL NOTES

1. CONTRACTOR SHALL VERIFY ALL DEMOLITION WORK WITH ENGINEER PRIOR TO BEGINNING WORK.
2. DEMOLISH ALL UNUSED CONDUCTORS. REMOVE CONDUIT FLUSH WITH CONCRETE, GRIND SMOOTH AND FILL WITH GROUT.

NOTES BY SYMBOL (X)

1. REMOVE VFD. BREAKERS, AND DOOR MOUNTED DEVICES TO REMAIN. REMOVE EXISTING LABEL AND LABEL AS "SPARE".
2. BREAKER, STARTER AND DOOR MOUNTED DEVICES TO REMAIN. REMOVE LABEL AND LABEL AS "SPARE".

CP&Y, INC.
TBPE FIRM REGISTRATION NO. F-1741

CITY OF AUSTIN

STATE OF TEXAS
GERALD P. ROBINSON, JR.
112423
LICENSED PROFESSIONAL ENGINEER
09/27/2021

NO.	REVISION	BY	DATE

VERIFY SCALE 0 1" BAR IS ONE INCH ON ORIGINAL DRAWING. IF NOT ONE INCH ON THIS SHEET, ADJUST SCALE

CITY OF AUSTIN – AUSTIN WATER
HORNSBY BEND BMP CENTRIFUGES

ELECTRICAL ONE-LINE DIAGRAM
MCC-T1 DEMOLITION

Date: MAY 2021
Designed: G.ROBINSON, P.E.
Drawn: G.LEUENBERGER
Reviewed: G.ROBINSON, P.E.
CP&Y Proj: AUST1600646.01

SHEET
E-7

REFERENCES: AUST1600646.01 Border Base.dwg _Std ENVIRO SEALS
May 20, 2021 – 2:55pm C:\pwworking\cpy\pw_cpy\gleuenberger\d0795251\AUST1600646.01_7_E-07_CPY.dwg

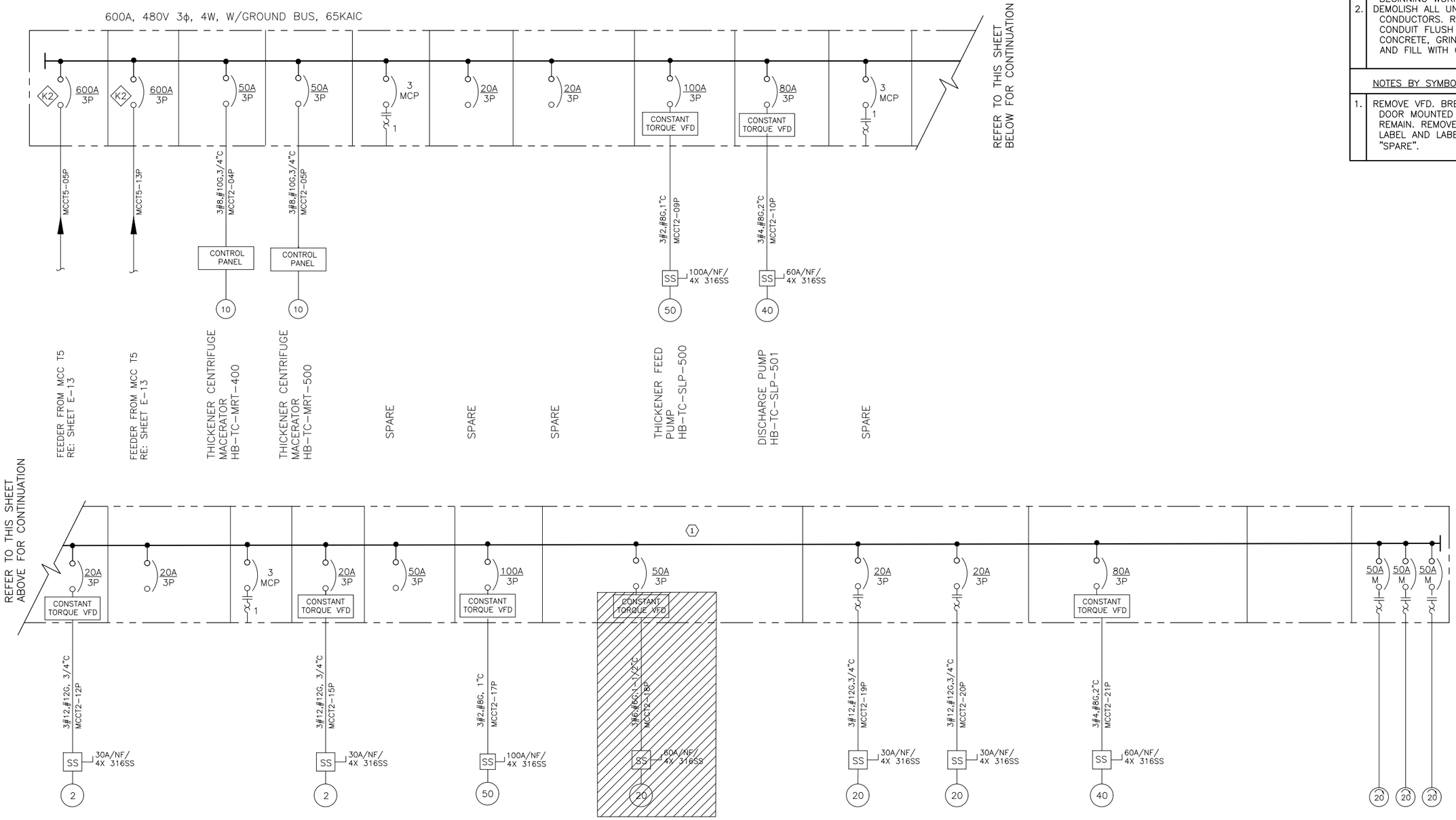

EXISTING MCC-T2 ONE-LINE DIAGRAM DEMOLITION

GENERAL NOTES

1. CONTRACTOR SHALL VERIFY ALL DEMOLITION WORK WITH ENGINEER PRIOR TO BEGINNING WORK.
2. DEMOLISH ALL UNUSED CONDUCTORS. REMOVE CONDUIT FLUSH WITH CONCRETE, GRIND SMOOTH AND FILL WITH GROUT.

NOTES BY SYMBOL (X)

1. REMOVE VFD. BREAKERS, AND DOOR MOUNTED DEVICES TO REMAIN. REMOVE EXISTING LABEL AND LABEL AS "SPARE".

CP&Y, INC.
TBPE FIRM REGISTRATION NO. F-1741

CITY OF AUSTIN

STATE OF TEXAS
GERALD P. ROBINSON, JR.
112423
LICENSED
PROFESSIONAL ENGINEER
09/27/2021

NO.	REVISION	BY	DATE

VERIFY SCALE 0 1" BAR IS ONE INCH ON ORIGINAL DRAWING. IF NOT ONE INCH ON THIS SHEET, ADJUST SCALE

CITY OF AUSTIN – AUSTIN WATER
HORNSBY BEND BMP CENTRIFUGES

ELECTRICAL ONE-LINE DIAGRAM
MCC-T2 DEMOLITION

Date: MAY 2021
Designed: G.ROBINSON, P.E.
Drawn: G.LEUENBERGER
Reviewed: G.ROBINSON, P.E.
CP&Y Proj: AUST1600646.01

SHEET
E-8

REFERENCES: _CPY_Standard_Border_Base.dwg _Std ENVIRO SEALS
May 20, 2021 – 2:56pm C:\pwworking\cpy\pw_cpy\gleuenberger\d0795251\AUST1600646.01_7_E-08_CPY.dwg

NOTES BY SYMBOL (X)	GENERAL NOTES
1. EXISTING CONDUIT AND CONDUCTORS TO BE REMOVED AND REPLACED WITH LONGER TO REACH NEW BREAKER IN DIFFERENT MOUNTING SPACE.	1. (K5) DENOTES A KIRK KEY INTERLOCK. 2. * DENOTES A KIRK KEY LOCK WITH KEY REMOVED. 3. FOUR (4) LOCKS WITH THREE (3) KEYS. 4. REMOVE EXISTING SQUARE D MJ CIRCUIT BREAKER. BREAKER REPLACEMENT SHOWN ON SHEETS E-13 AND E-17.

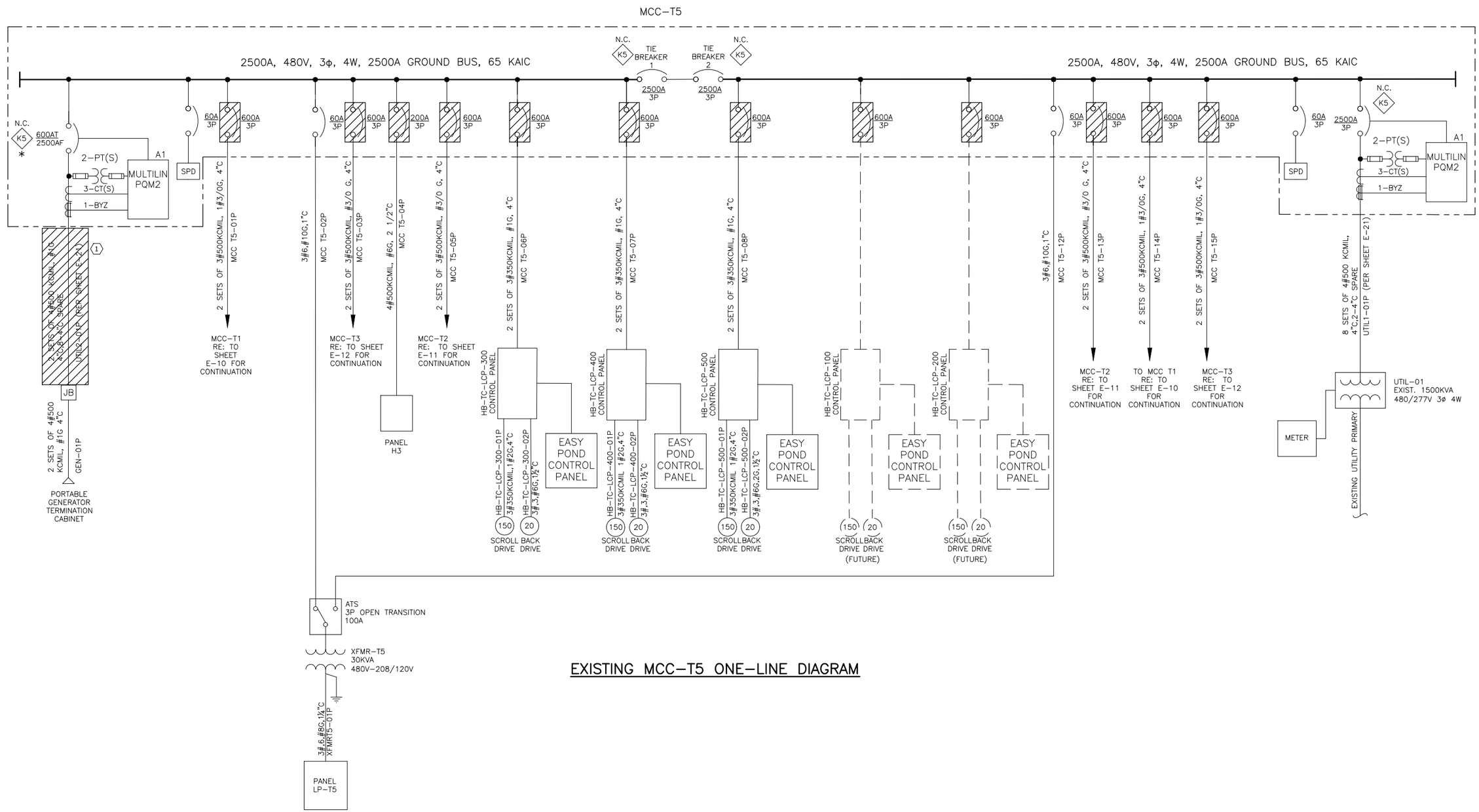

EXISTING MCC-T5 ONE-LINE DIAGRAM

CP&Y, INC.
TBPE FIRM REGISTRATION NO. F-1741

CITY OF AUSTIN ESTD. 1839 IMPROVED

STATE OF TEXAS GERALD P. ROBINSON, JR. 112423 LICENSED PROFESSIONAL ENGINEER 09/27/2021

NO.	VERIFY SCALE 0 1"	REVISION	BY	DATE

BAR IS ONE INCH ON ORIGINAL DRAWING. IF NOT ONE INCH ON THIS SHEET, ADJUST SCALE

CITY OF AUSTIN – AUSTIN WATER
HORNSBY BEND BMP CENTRIFUGES

EXISTING MCC-T5 ONE-LINE DIAGRAM

Date: MAY 2021
Designed: D. BARNES
Drawn: G.LEUENBERGER
Reviewed: G.ROBINSON, P.E.
CP&Y Proj. AUST1600646.01

SHEET
E-9

REFERENCES: _CPY_Standard_Border_Base.dwg _Std ENVIRO SEALS
May 20, 2021 – 9:42am C:\pwworking\cpy\pw_cpy\gleuenberger\d0795251\AUST1600646.01_7_E-09_CPY.dwg

NOTES BY SYMBOL (X)
1. NEW NPW PUMP, CABLES TERMINATED AT JB.

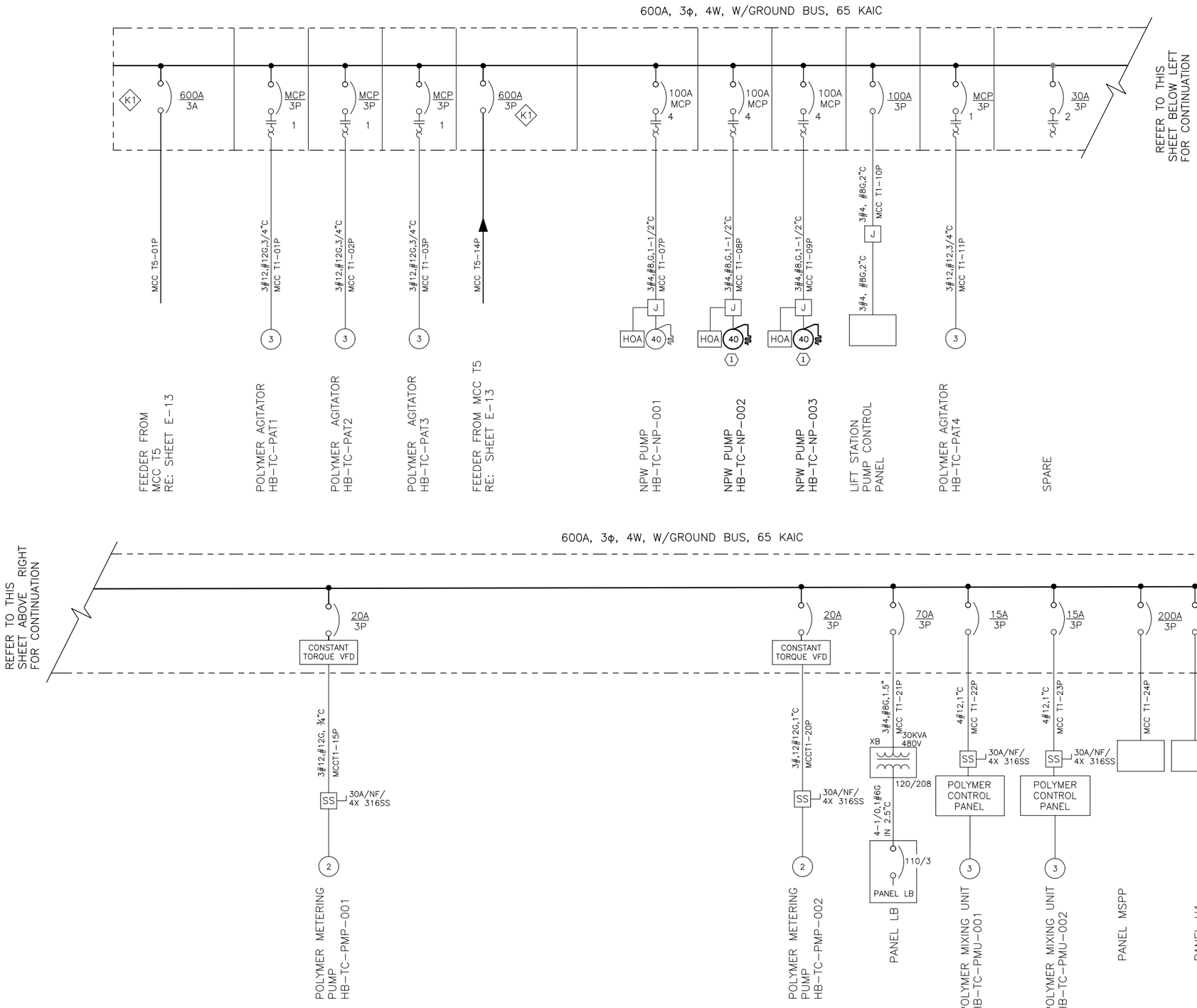

MODIFIED MCC-T1 ONE-LINE DIAGRAM

CP&Y, INC.
TBPE FIRM REGISTRATION NO. F-1741

CITY OF AUSTIN

STATE OF TEXAS
GERALD P. ROBINSON, JR.
112423
LICENSED
PROFESSIONAL ENGINEER
08/27/2021

NO.	REVISION	BY	DATE

VERIFY SCALE 0 1" BAR IS ONE INCH ON ORIGINAL DRAWING. IF NOT ONE INCH ON THIS SHEET, ADJUST SCALE

CITY OF AUSTIN – AUSTIN WATER
HORNSBY BEND BMP CENTRIFUGES

MODIFIED MCC-T1 ONE-LINE DIAGRAM

Date: MAY 2021
Designed: G.ROBINSON, P.E.
Drawn: G.LEUENBERGER
Reviewed: G.ROBINSON, P.E.
CP&Y Proj. AUST1600646.01

SHEET
E-10

REFERENCES: AUST1600646.01 Border Base.dwg –Std ENVIRO SEALS
May 20, 2021 – 3:15pm C:\pwworking\cpy\pw_cpy\gleuenberger\d0795251\AUST1600646.01_7_E-10_CPY.dwg

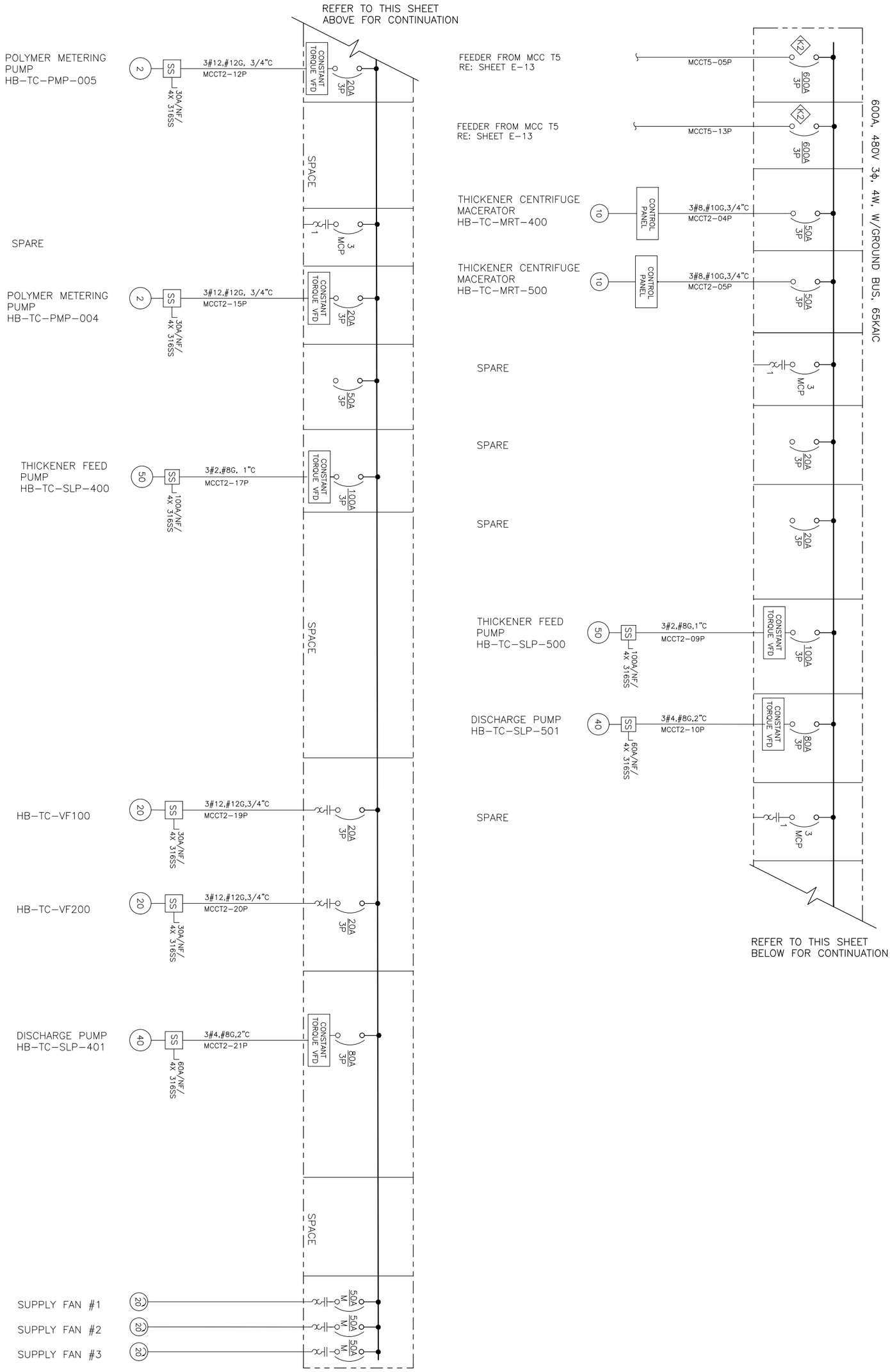

MODIFIED MCC-T2 ONE-LINE DIAGRAM

Date:	MAY 2021
Designed:	G.ROBINSON, P.E.
Drawn:	G.LEUENBERGER
Reviewed:	G.ROBINSON, P.E.
CP&Y Proj.	AUST1600646.01

SHEET E-11

CITY OF AUSTIN – AUSTIN WATER
HORNSBY BEND BMP CENTRIFUGES

MODIFIED MCC-T2 ONE-LINE DIAGRAM

NO.	REVISION	BY	DATE

VERIFY SCALE 0 1"
BAR IS ONE INCH ON ORIGINAL DRAWING. IF NOT ONE INCH ON THIS SHEET, ADJUST SCALE

STATE OF TEXAS
GERALD P. ROBINSON, JR.
112423
LICENSED PROFESSIONAL ENGINEER
08/27/2021

CITY OF AUSTIN FOUNDED 1839

CP&Y, INC.
TBPE FIRM REGISTRATION NO. #F-1741

NOTES BY SYMBOL (X)

1. PROVIDE LOAD REACTOR PER THE MANUFACTURERS RECOMMENDATION.

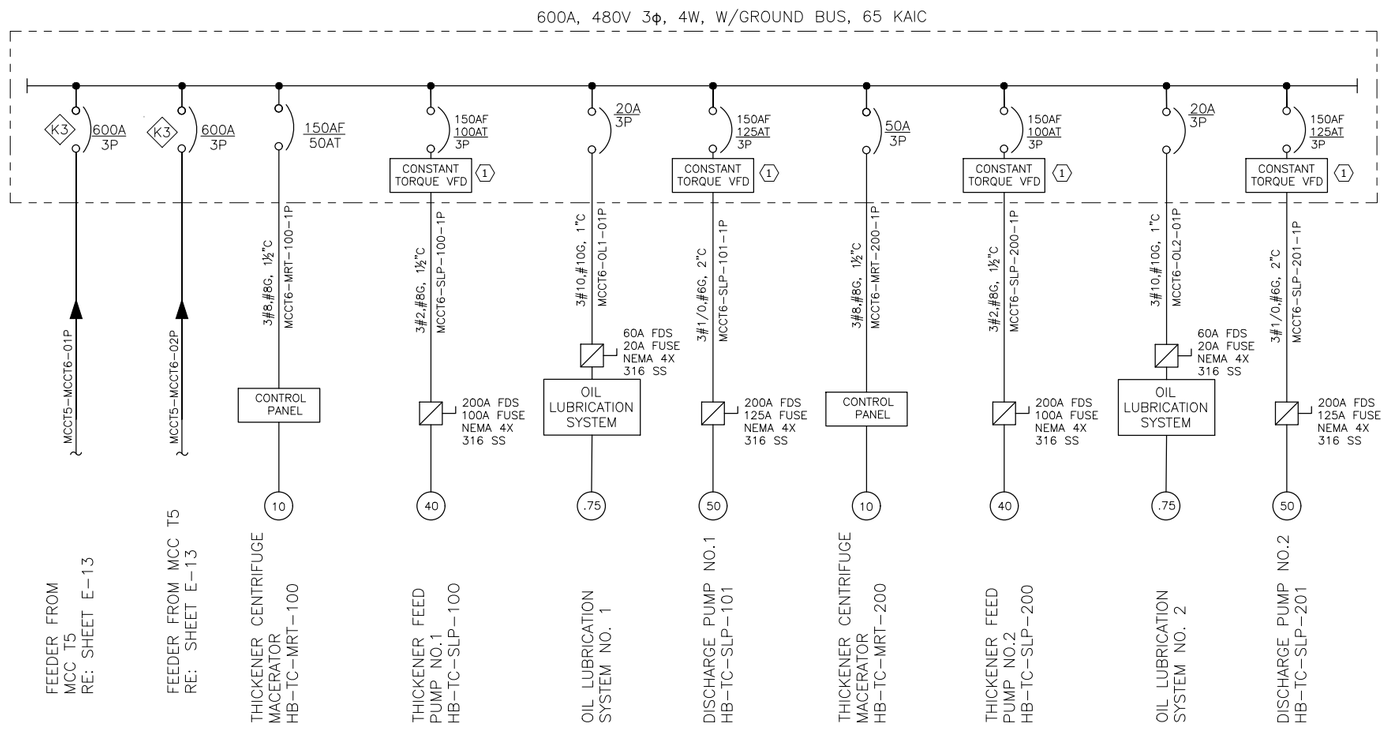

PROPOSED MCC-T6 ONE-LINE DIAGRAM

CP&Y, INC.
TBPE FIRM REGISTRATION NO. F-1741

CITY OF AUSTIN ESTD. 1839 INCORPORATED 1871

STATE OF TEXAS
GERALD P. ROBINSON, JR.
112423
LICENSED
PROFESSIONAL ENGINEER
08/27/2021

NO.	REVISION	BY	DATE

VERIFY SCALE 0 1"
BAR IS ONE INCH ON ORIGINAL DRAWING. IF NOT ONE INCH ON THIS SHEET, ADJUST SCALE

CITY OF AUSTIN – AUSTIN WATER
HORNSBY BEND BMP CENTRIFUGES

PROPOSED MCC-T6 ONE-LINE DIAGRAM

Date:	MAY 2021
Designed:	G.ROBINSON, P.E.
Drawn:	G.LEUENBERGER
Reviewed:	G.ROBINSON, P.E.
CP&Y Proj:	AUST1600646.01

SHEET
E-12

REFERENCES: AUST1600646.01 Border Base.dwg _Std ENVIRO SEALS
Aug 27, 2021 – 1:44pm C:\pwworking\cpy\pw_cpy\gleuenberger\d0795251\AUST1600646.01_7_E-12_CPY.dwg

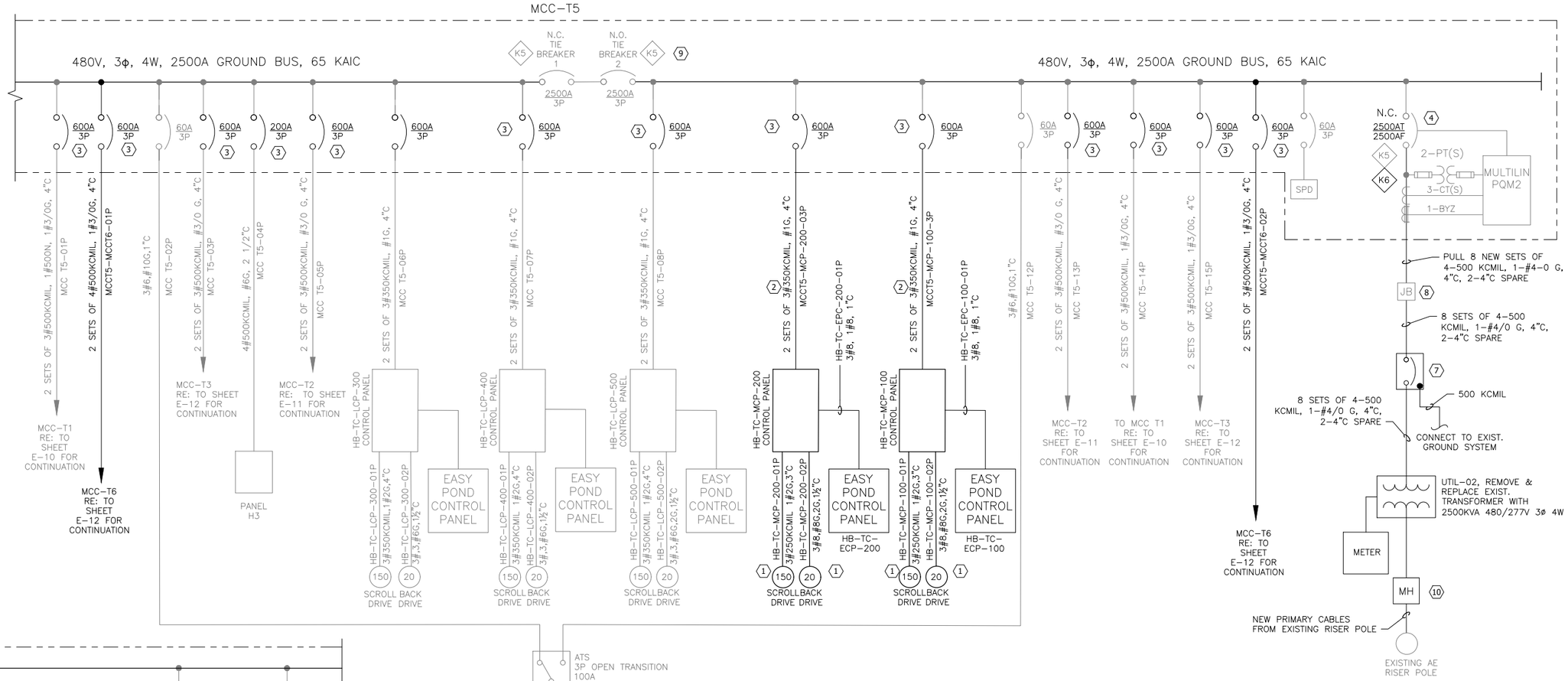

MODIFIED MCC–T5 ONE–LINE DIAGRAM

INTERLOCK EXPLANATION NOTES:

1. (4) K5 LOCKS AND (3) K5 KEYS.
2. (4) K6 LOCKS AND (2) K6 KEYS.
3. N.C. MEANS NORMALLY CLOSED – KEY IN.
4. N.O. MEANS NORMALLY OPEN – KEY OUT.
5. BOTH KEYS ARE REQUIRED FOR BREAKERS WITH TWO LOCKS.
6. NORMAL CONFIGURATION
   - MAIN #1 CLOSED: K5 & K6 KEYS "IN"
   - TIE #1 CLOSED: K5 KEY "IN"
   - TIE #2 OPEN: K5 KEY "OUT", UNAVAILABLE
   - MAIN #2 CLOSED: K5 & K6 KEYS "IN"
   - GENERATOR OPEN: BOTH K6 KEYS "OUT", UNAVAILABLE
7. EMERGENCY CONFIGURATION
   - MAIN #1 OPEN: K6 KEY "OUT, K5 KEY "IN OR OUT"
   - TIE #1 CLOSED: K5 KEY "IN"
   - TIE #2 OPEN OR CLOSED: K5 KEY "IN" TO CLOSE, K5 KEY "OUT" TO OPEN
   - MAIN #2 OPEN: K5 KEY "IN OR OUT", K6 KEY "OUT", UNAVAILABLE
   - GENERATOR CLOSED: BOTH K6 KEYS "IN"

NOTES BY SYMBOL (X)

1. THERMISTER AND SPACE HEATER CABLES TO BE ROUTED WITH POWER CONDUCTORS.
2. NEW CONDUIT AND CONDUCTORS
3. INSTALL SQUARED D TYPE LJ CIRCUIT BREAKER. AMPACITY AS SHOWN, 80% RATED, LSI, 65kAIC.
4. ADJUST EXISTING BREAKER TO 2500A. ADD KIRK KEY LOCK KEYED TO K6.
5. 8 EXISTING SETS OF 4#500 KCMIL. IN EXISTING CONDUITS. 2 SPARE 4"C TO REMAIN.
6. PROVIDE WITH (2) KIRK KEY LOCKS KEYED TO K6.
7. SQUARE D QED2 SWITCHBOARD WITH 2500A RK BREAKER. NEMA 4X SS ENCLOSURE. CONNECT TO EXISTING SYSTEM GROUND.
8. EXISTING BUILDING MOUNTED JUNCTION BOX.
9. DISCONNECT THE EXISTING SYSTEM NEUTRAL TO GROUND BONDING JUMPER(S).
10. REMOVE EXISTING PRIMARY CONDUCTORS AND INSTALL MANHOLE IN EXISTING DUCT SYSTEM. EXIT MANHOLE WITH 2–4" CONCRETE ENCASED CONDUITS TO NEW TRANSFORMER. INSTALL NEW PRIMARY CABLES.
11. CONTRACTOR INSTALLED CONCRETE ENCASED 2–4"C. PRIMARY CABLES INSTALLED BY AUSTIN ENERGY.

GENERAL NOTES

1. THE DESIGN INTENT IS TO CONVERT MCC–T5 INTO A MAIN–TIE–MAIN MCC. NORMAL OPERATION WILL BE WITH BOTH MAINS CLOSED AND THE TIE OPEN.

CP&Y, INC.
TBPE FIRM REGISTRATION NO. #F–1741

CITY OF AUSTIN – AUSTIN WATER
HORNSBY BEND BMP CENTRIFUGES

MODIFIED MCC–T5 ONE–LINE DIAGRAM

NO.	VERIFY SCALE 0 1"	REVISION	BY	DATE
	BAR IS ONE INCH ON ORIGINAL DRAWING. IF NOT ONE INCH ON THIS SHEET, ADJUST SCALE			

Date: MAY 2021
Designed: G.ROBINSON, P.E.
Drawn: G.LEUENBERGER
Reviewed: G.ROBINSON, P.E.
CP&Y Proj. AUST1600646.01

SHEET
E–13

REFERENCES: AUST1600646.01 Border Base.dwg _Std ENVIRO SEALS
Aug 19, 2021 – 10:14am C:\pwworking\cpy\pw_cpy\gleuenberger\d0795251\AUST1600646.01_7_E-13_CPY.dwg

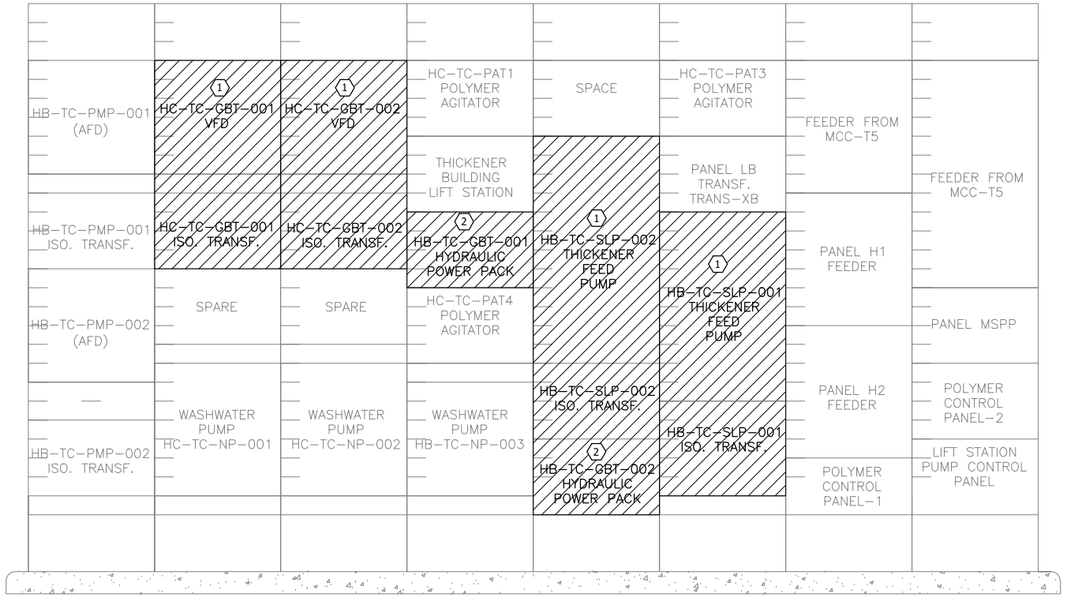

MCC-T1 FRONT VIEW ELEVATION DEMOLITION

NTS

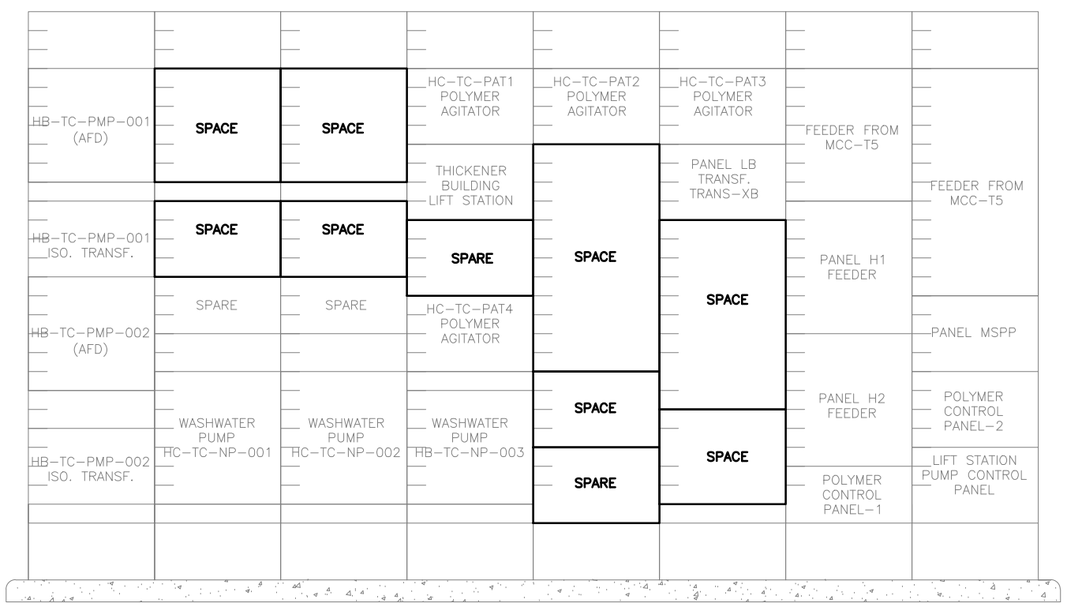

MCC-T1 FRONT VIEW ELEVATION MODIFICATION

NTS

GENERAL NOTES

1. MCC-T1 IS A SQUARE D MODEL F.O.10728789-004 FROM PLANT 46. REFER TO SHEET E-07 FOR ONE-LINE DEMOLITION.
2. DEMOLISH ALL UNUSED CONDUCTORS. REMOVE CONDUIT FLUSH WITH CONCRETE. GRIND SMOOTH AND FILL WITH GROUT.
3. SALVAGE EXISTING MCC-T1 SIDE PANEL DURING DEMO ACTIVITIES TO RE-USE ON MODIFIED MCC-T1.
4. THIS IS AN ACTIVE FACILITY THAT MUST MAINTAIN OPERATION. PROTECT ELECTRICAL AND CONTROL EQUIPMENT DURING ALL CONSTRUCTION ACTIVITIES FROM DUST AND DEBRIS.

NOTES BY SYMBOL (X)

1. REMOVE VFD. BREAKERS, AND DOOR MOUNTED DEVICES TO REMAIN. REMOVE EXISTING LABEL AND LABEL AS "SPACE".
2. BREAKER, STARTER AND DOOR MOUNTED DEVICES TO REMAIN. REMOVE LABEL AND LABEL AS "SPARE".

CP&Y, INC.
TBPE FIRM REGISTRATION NO. F-1741

STATE OF TEXAS
GERALD P. ROBINSON, JR.
112423
LICENSED
PROFESSIONAL ENGINEER
08/27/2021

NO.	REVISION	BY	DATE

VERIFY SCALE 0 1"
BAR IS ONE INCH ON ORIGINAL DRAWING. IF NOT ONE INCH ON THIS SHEET, ADJUST SCALE

CITY OF AUSTIN – AUSTIN WATER
HORNSBY BEND BMP CENTRIFUGES

MCC-T1 FRONT ELEVATIONS
DEMOLITION AND MODIFICATION

Date: MAY 2021
Designed: G.ROBINSON, P.E.
Drawn: G.LEUENBERGER
Reviewed: G.ROBINSON, P.E.
CP&Y Proj. AUST1600646.01

SHEET
E-14

REFERENCES: AUST1600646.01 Border Base.dwg _Std ENVIRO SEALS
May 20, 2021 – 3:20pm C:\pwworking\cpy\pw_cpy\gleuenberger\d0795251\AUST1600646.01_7_E-14_CPY.dwg

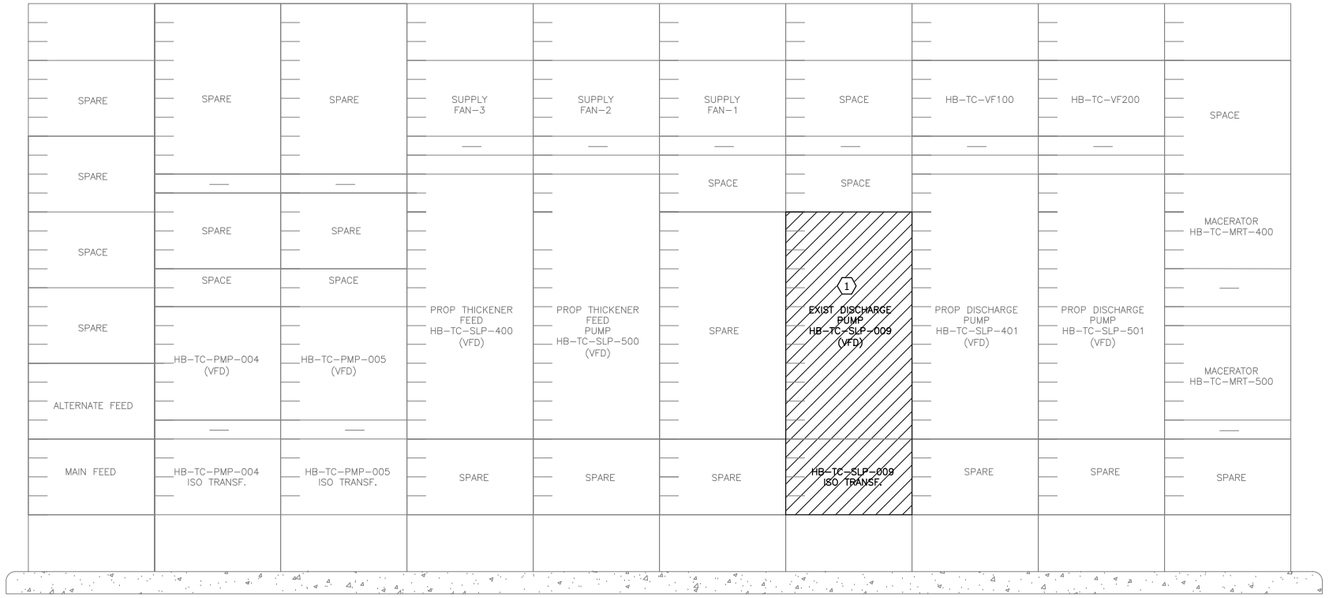

MCC–T2 FRONT VIEW ELEVATION DEMOLITION

NTS

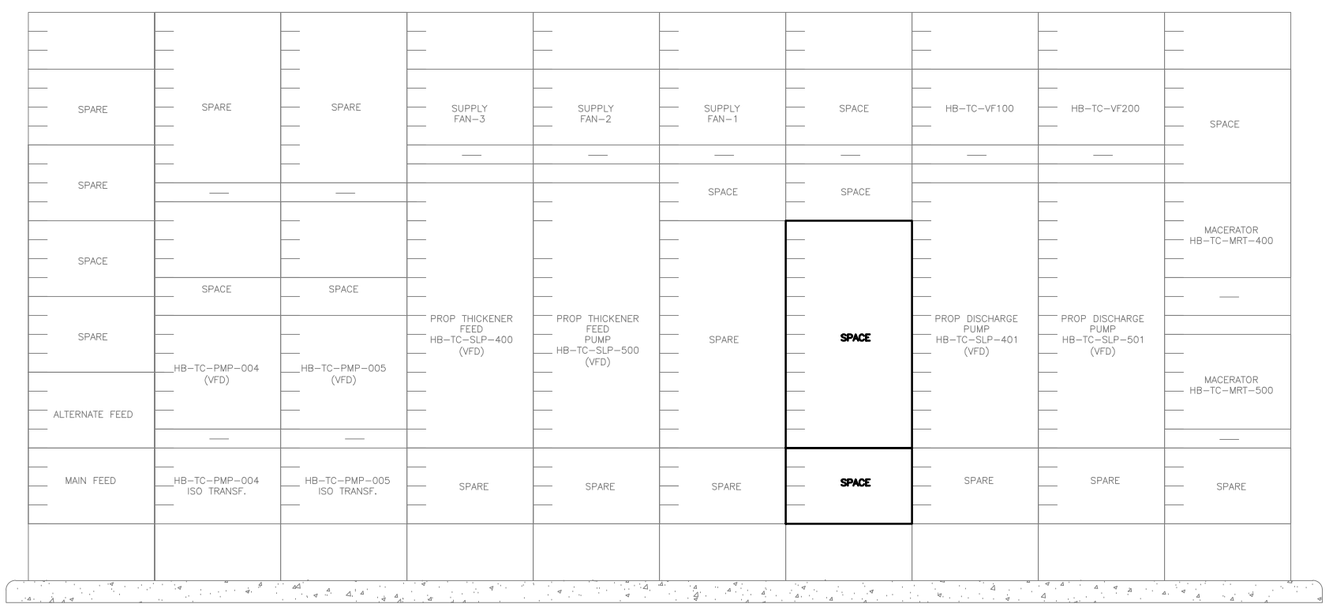

MCC–T2 FRONT VIEW ELEVATION MODIFICATION

NTS

GENERAL NOTES

1. MCC–T2 IS SQUARE D MODEL 5 F.O. 2072332C22 REFER TO SHEET E–8 & E11 FOR ONE LINE DIAGRAM.
2. DEMOLISH ALL UNUSED CONDUCTORS. REMOVE CONDUIT FLUSH WITH CONCRETE. GRIND SMOOTH AND FILL WITH GROUT.
3. THIS IS AN ACTIVE FACILITY THAT MUST MAINTAIN OPERATION. PROTECT ELECTRICAL AND CONTROL EQUIPMENT DURING ALL CONSTRUCTION ACTIVITIES FROM DUST AND DEBRIS.

NOTES BY SYMBOL (X)

1. REMOVE VFD. BREAKERS, AND DOOR MOUNTED DEVICES TO REMAIN. REMOVE EXISTING LABEL AND LABEL AS "SPACE".

CP&Y, INC.
TBPE FIRM REGISTRATION NO. F-1741

STATE OF TEXAS — GERALD P. ROBINSON, JR. — 112423 — LICENSED PROFESSIONAL ENGINEER — 05/27/2021

NO.	REVISION	BY	DATE

VERIFY SCALE 0 1"
BAR IS ONE INCH ON ORIGINAL DRAWING. IF NOT ONE INCH ON THIS SHEET, ADJUST SCALE

CITY OF AUSTIN – AUSTIN WATER
HORNSBY BEND BMP CENTRIFUGES
MCC FRONT ELEVATIONS
MCC–T2
DEMOLITION AND MODIFICATIONS

Date: MAY 2021
Designed: G.ROBINSON, P.E.
Drawn: G.LEUENBERGER
Reviewed: G.ROBINSON, P.E.
CP&Y Proj: AUST1600646.01

SHEET
E–15

REFERENCES: AUST1600646.01 Border Base.dwg _Std ENVIRO SEALS
May 20, 2021 – 3:22pm C:\pwworking\cpy\pw_cpy\gleuenberger\d0795251\AUST1600646.01_7_E-15_CPY.dwg

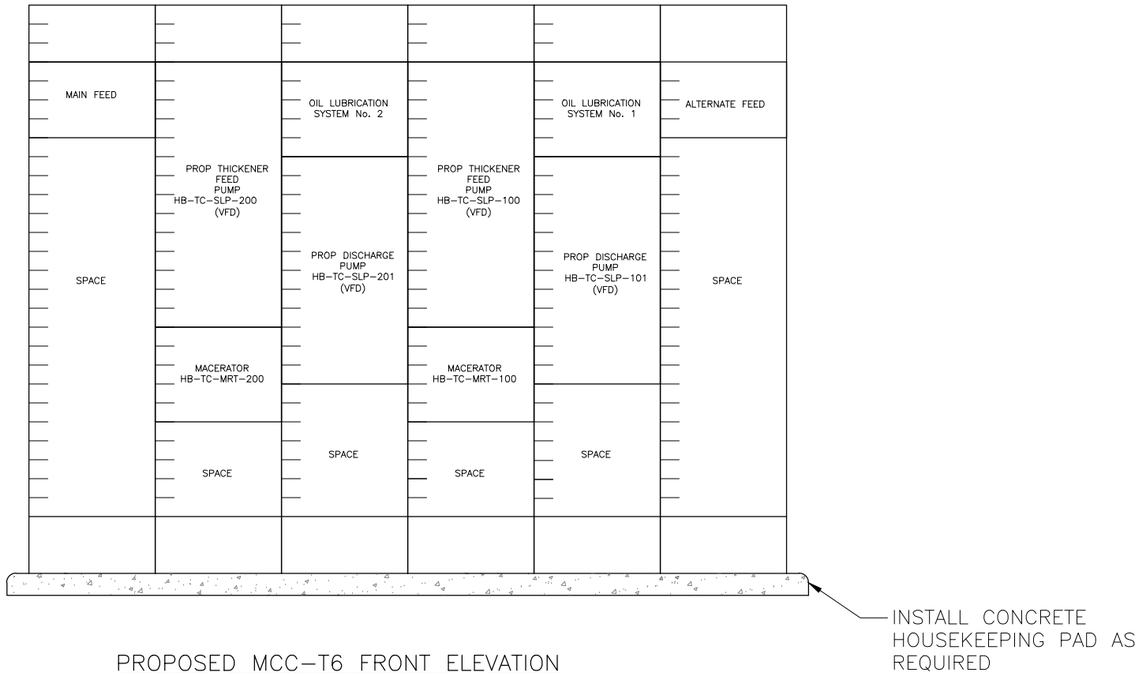

PROPOSED MCC-T6 FRONT ELEVATION

NTS

GENERAL NOTES

1. SEE STRUCTURAL SHEET FOR EQUIPMENT PAD DETAILS.
2. MCC IS TO BE TOP FED.
3. THIS IS AN ACTIVE FACILITY THAT MUST MAINTAIN OPERATION. PROTECT ELECTRICAL AND CONTROL EQUIPMENT DURING ALL CONSTRUCTION ACTIVITIES FROM DUST AND DEBRIS.

CP&Y, INC.
TBPE FIRM REGISTRATION NO. F-1741

CITY OF AUSTIN

STATE OF TEXAS
GERALD P. ROBINSON, JR.
112423
LICENSED
PROFESSIONAL ENGINEER
08/27/2021

NO.	REVISION	BY	DATE

VERIFY SCALE 0 1"
BAR IS ONE INCH ON ORIGINAL DRAWING. IF NOT ONE INCH ON THIS SHEET, ADJUST SCALE

CITY OF AUSTIN – AUSTIN WATER
HORNSBY BEND BMP CENTRIFUGES

PROPOSED MCC-T6 FRONT ELEVATION

Date: MAY 2021
Designed: K. BARNES
Drawn: G.LEUENBERGER
Reviewed: G.ROBINSON, P.E.
CP&Y Proj: AUST1600646.01

SHEET
E-16

REFERENCES: AUST1600646.01 Border Base.dwg _Std ENVIRO SEALS
Aug 25, 2021 – 3:40pm C:\pwworking\cpy\pw_cpy\gleuenberger\d0795251\AUST1600646.01_7_E-16_CPY.dwg

GENERAL NOTES	
1.	THIS IS AN ACTIVE FACILITY THAT MUST MAINTAIN OPERATION. PROTECT ELECTRICAL AND CONTROL EQUIPMENT DURING ALL CONSTRUCTION ACTIVITIES FROM DUST AND DEBRIS.

NOTES BY SYMBOL (X)	
1.	REFER TO E–13 FOR ONE–LINE DIAGRAM.
2.	INSTALL NEW TYPE LJ CIRCUIT BREAKER, 600A, 3–POLE, 80% RATED, ELECTRONIC TRIP (LSI), P65kAIC.
3.	REMOVE AND REPLACE EXISTING TYPE MJ CIRCUIT BREAKERS WITH TYPE LJ CIRCUIT BREAKER, 600A, 3–POLE, 80% RATED, ELECTRONIC TRIP (LSI), P65KAIC.
4.	ADJUST THE TRIP SETTING TO 2500A. INSTALL ADDITIONAL KIRK KEY INTERLOCK KEYED TO K6. BREAKER TO SERVE AS SECOND MAIN BREAKER. CHANGE EXISTING CT IF REQUIRED.
5.	INSTALL NEW TYPE LJ CIRCUIT BREAKER, 400A, 3–POLE, 80% RATED, ELECTRONIC TRIP (LSI), P65KAIC. BREAKER WILL SERVE AS GENERATOR BREAKER. PROVIDE WITH (2) KIRK KEY LOCKS KEYED TO K6.
6.	ADJUST THE TRIP SETTING TO 2500A. INSTALL ADDITIONAL KIRK KEY INTERLOCK KEYED TO K6.
7.	ADJUST THE TRIP SETTING TO 2500A.

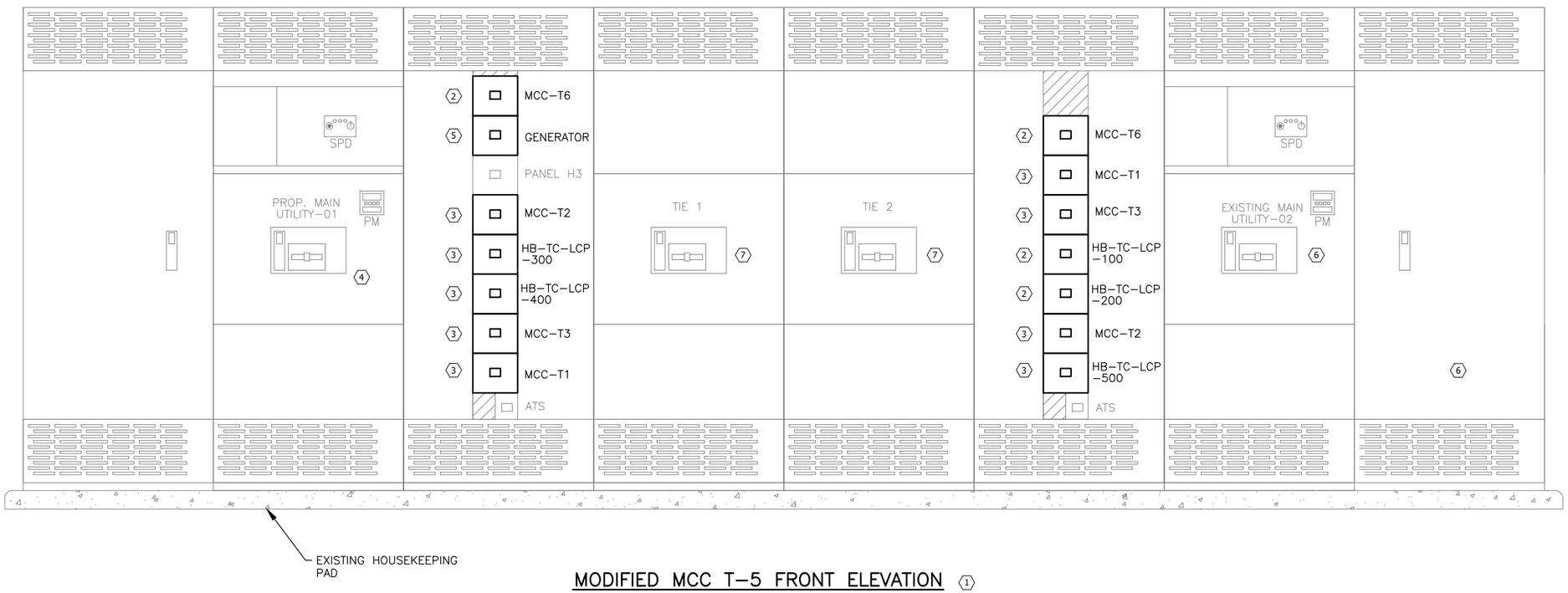

MODIFIED MCC T–5 FRONT ELEVATION (1)

CP&Y, INC.
TBPE FIRM REGISTRATION NO. F–1741

CITY OF AUSTIN EST. 1839 EMPOWERED

STATE OF TEXAS
GERALD P. ROBINSON, JR.
11242.3
LICENSED
PROFESSIONAL ENGINEER
08/27/2021

NO.	REVISION	BY	DATE

VERIFY SCALE 0 1"
BAR IS ONE INCH ON ORIGINAL DRAWING. IF NOT ONE INCH ON THIS SHEET, ADJUST SCALE

CITY OF AUSTIN – AUSTIN WATER
HORNSBY BEND BMP CENTRIFUGES

MODIFIED MCC–T5 FRONT ELEVATIONS

Date: MAY 2021
Designed: D. BARNES
Drawn: G.LEUENBERGER
Reviewed: G.ROBINSON, P.E.
CP&Y Proj. AUST1600646.01

SHEET
E–17

REFERENCES: AUST1600646.01 Border Base.dwg _Std ENVIRO SEALS
May 24, 2021 – 7:16am C:\pwworking\cpy\gw_cpy\gleuenberger\d0795251\AUST1600646.01_7_E–17_CPY.dwg

GENERAL NOTES

1. ELECTRICAL INSTALLATION INCLUDING CONDUIT ROUTING IS DIAGRAMMATIC ONLY. THE CONTRACTOR SHALL SUBMIT A CONDUIT ROUTING PLAN FOR REVIEW AND APPROVAL PRIOR TO STARTING WORK.
2. SINGLE LINE CONDUITS SHOWN FOR CLARITY. SINGLE LINE MAY REPRESENT MULTIPLE CONDUITS.
3. DO NOT COMBINE MULTIPLE POWER CIRCUITS INTO A SINGLE CONDUIT UNLESS NOTED OTHERWISE.
4. DO NOT COMBINE DIGITAL AND ANALOG SIGNALS. SIGNALS TO HAVE SEPARATE J-BOXES AND CONDUIT RUNS.
5. LIMIT CONDUIT BENDS TO A MAXIMUM OF 270 DEGREES BETWEEN PULL POINTS. NOTE THAT NOT ALL PULL POINTS, BOXES AND FITTINGS ARE SHOWN.
6. REFER TO STRUCTURAL, MECHANICAL HVAC, INSTRUMENTATION AND CONTROL DRAWINGS FOR ADDITIONAL INFORMATION.
7. ALL CONDUITS ENTERING CLIMATE CONTROLLED ELECTRICAL ROOMS SHALL HAVE CONDUIT SEALS ON NON-CLIMATE CONTROLLED SIDE. INSTALL UL-LISTED POURED SEALS TO ALL CONDUIT ENTERING/EXITING FIELD CONTROL PANELS.
8. ALL CONDUITS, UNLESS NOTED OTHERWISE, SHALL EXIT THE ELECTRICAL ROOM THROUGH THE EAST WALL. CORE DRILL THROUGH WALL AS REQUIRED. CORE DRILLING AND CUTTING THROUGH CONTROL JOINTS AND THE CONCRETE CEILING IS PROHIBITED. SEAL PENETRATIONS WITH A UL LISTED FIRE-STOPPING COMPOUND.
9. THIS IS AN ACTIVE FACILITY THAT MUST MAINTAIN OPERATION. PROTECT ELECTRICAL AND CONTROL EQUIPMENT DURING ALL CONSTRUCTION ACTIVITIES FROM DUST AND DEBRIS.

NOTES BY SYMBOL (X)

1. PROPOSED OIL LUBRICATION SYSTEM.
2. PROVIDE CONDUIT SEAL USING POLYWATER T250 FOR ALL CONDUITS PENETRATING WALL FROM EQUIPMENT AREA.
3. CONTRACTOR TO INSTALL WALL PACK ABOVE ROLL-UP DOOR. PROVIDE BACK BOX AS REQUIRED. CAULK AND SEAL THRU-WALL PENETRATION. CONNECT TO EXISTING EXTERIOR LIGHTING CIRCUIT.
4. NEW PUMP
5. 4'x4'x2' JUNCTION BOX MOUNTED ON THE BUILDING EXTERIOR. MOUNT HIGH ENOUGH TO MINIMIZE CONFLICTS WITH LOUVERS AND EQUIPMENT FROM OTHER DISCIPLINES. COORDINATE WITH ARCHITECTURAL.
6. DO NOT PENETRATE THE CEILING. ROUTE CONDUITS BY EXITING THE TOP OF THE ENCLOSURE, EXIT THE ROOM'S EAST WALL, TURN VERTICALLY AND RUN EAST UNDER THE ROOF DECK. TURN SOUTH THEN WEST AS SHOWN. MOUNT USING STAINLESS STEEL HARDWARE, HANGERS AND SUPPORTS. USE EXPANSION FITTINGS WHEN CROSSING EXPANSION JOINTS.
7. 10 CONDUITS INSTALLED IN A 10 ROWS BY 1 COLUMN. INSTALL HANGERS, SUPPORTS, AND EXPANSION FITTINGS AS REQUIRED.
8. PROPOSED MCC-T6.
9. EXISTING UTIL-011 JB. INSTALL (10) 4" CONDUITS FROM BOX TO UTIL-01 TRANSFORMER. INSTALL CONDUCTORS FROM TRANSFORMER THRU BOX AND EXISTING CONDUITS TO MCC-T5.
10. CUT GENERATOR CONDUITS AT UTIL-01 JB, REMOVE STUBS AND REPAIR/SEAL HOLES. CORE DRILL BUILDING NEXT TO UTILITY BOX AND INSTALL LB FITTINGS ON GENERATOR CONDUITS. INSTALL CONDUITS TO MCC-T5. INSTALL NEW WIRING FROM GENERATOR TERMINATION CABINET TO MCC-T5.
11. EXISTING UTIL-02 JUNCTION BOX.
12. CONDUITS PENETRATE WALL THEN TURN VERTICALLY. RUN EAST ALONG THE UNDERSIDE OF THE ROOF DECK THEN TURN SOUTH, THE WEST AS SHOWN TO JUNCTION BOXES/LOADS. MOUNT USING STAINLESS STEEL HARDWARE, HANGARS, AND SUPPORTS. USE EXPANSION AND DEFLECTION FITTINGS WHEN CROSSING EXPANSION JOINTS.

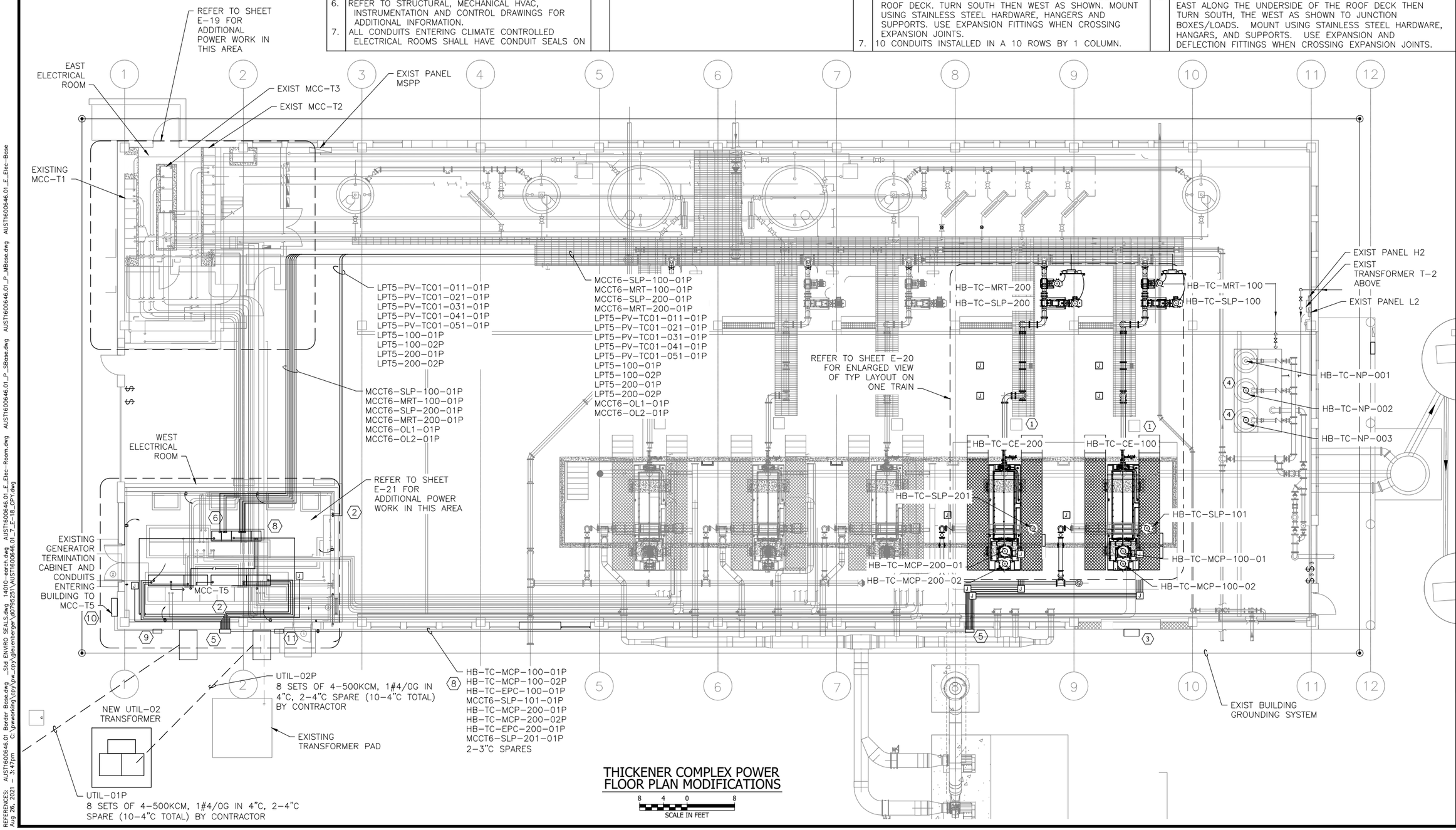

THICKENER COMPLEX POWER FLOOR PLAN MODIFICATIONS

REFERENCES: AUST1600646.01 Border Base.dwg _Std ENVIRO SEALS.dwg 14010-arch.dwg AUST1600646.01_E_Elec-Room.dwg AUST1600646.01_P_SBase.dwg AUST1600646.01_P_MBase.dwg AUST1600646.01_E_Elec-Base
Aug 26, 2021 - 3:47pm C:\pwworking\cpy\pw_cpy\gleuenberger\d0795251\AUST1600646.01_7_E-18_CPY.dwg

CP&Y, INC.
TBPE FIRM REGISTRATION NO. F-1741

CITY OF AUSTIN – AUSTIN WATER
HORNSBY BEND BMP CENTRIFUGES
THICKENER COMPLEX POWER FLOOR PLAN MODIFICATIONS

NO.	REVISION	BY	DATE

VERIFY SCALE BAR IS ONE INCH ON ORIGINAL DRAWING. IF NOT ONE INCH ON THIS SHEET, ADJUST SCALE

Date: MAY 2021
Designed: D. BARNES
Drawn: G.LEUENBERGER
Reviewed: G.ROBINSON, P.E.
CP&Y Proj. AUST1600646.01

SHEET
E-18

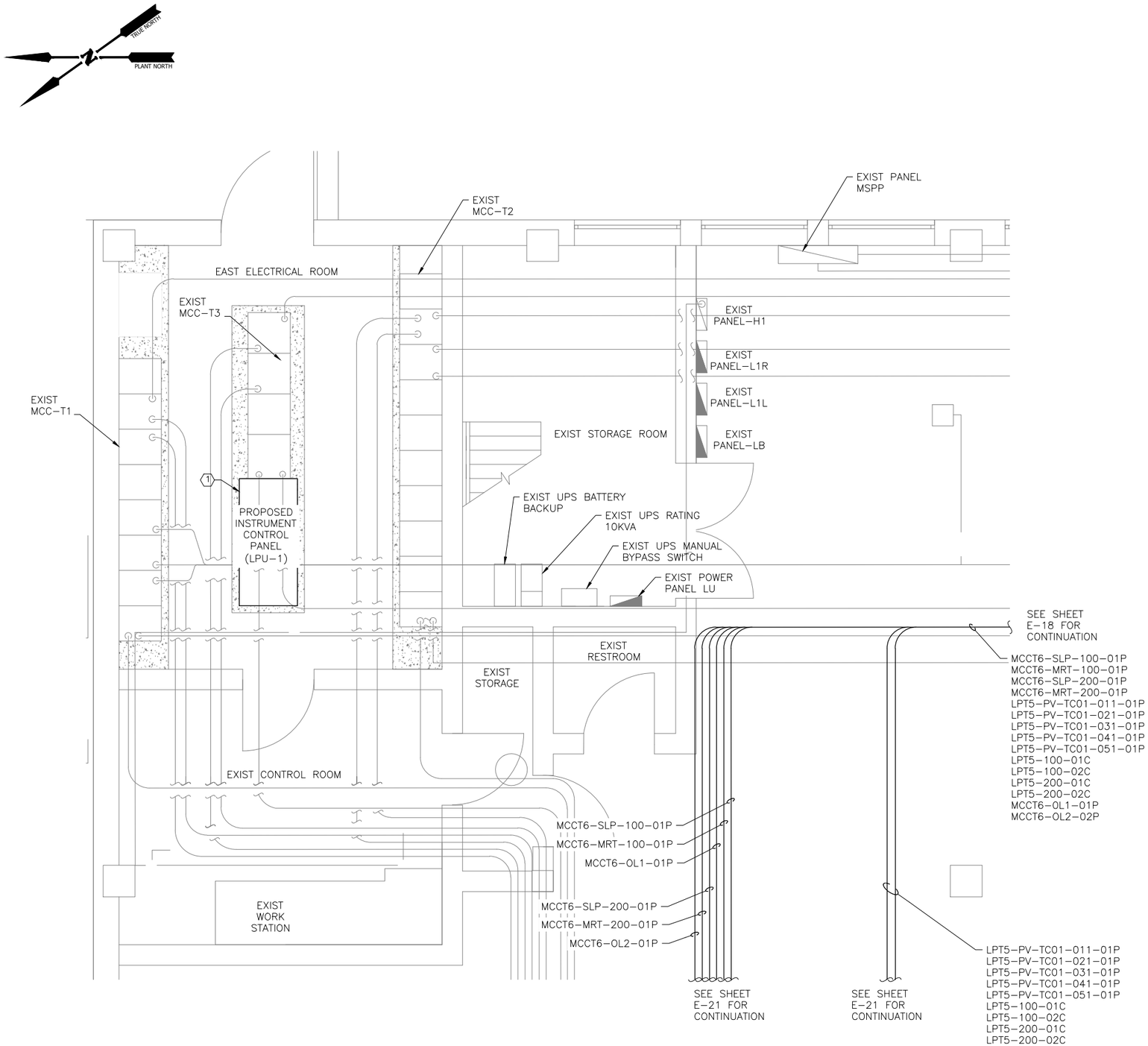

1ST FLOOR EXISTING ELECTRICAL ROOM POWER PLAN MODIFICATIONS

2 1 0 4
SCALE IN FEET

GENERAL NOTES

1. ELECTRICAL INSTALLATION INCLUDING CONDUIT ROUTING IS DIAGRAMMATIC ONLY. THE CONTRACTOR SHALL SUBMIT A CONDUIT ROUTING PLAN FOR REVIEW AND APPROVAL PRIOR TO STARTING WORK.
2. SINGLE LINE CONDUITS SHOWN FOR CLARITY. SINGLE LINE MAY REPRESENT MULTIPLE CONDUITS.
3. DO NOT COMBINE MULTIPLE POWER CIRCUITS INTO A SINGLE CONDUIT UNLESS NOTED OTHERWISE.
4. DO NOT COMBINE DIGITAL AND ANALOG SIGNALS. SIGNALS TO HAVE SEPARATE J–BOXES AND CONDUIT RUNS.
5. LIMIT CONDUIT BENDS TO A MAXIMUM OF 270 DEGREES BETWEEN PULL POINTS. NOTE THAT NOT ALL PULL PONTS, BOXES AND FITTINGS ARE SHOWN.
6. REFER TO STRUCTURAL, MECHANICAL HVAC, INSTRUMENTATION AND CONTROL DRAWINGS FOR ADDITIONAL INFORMATION.
7. ALL CONDUITS ENTERING CLIMATE CONTROLLED ELECTRICAL ROOMS SHALL HAVE CONDUIT SEALS ON NON–CLIMATE CONTROLLED SIDE. INSTALL UL–LISTED POURED SEALS TO ALL CONDUIT ENTERING/EXITING FIELD CONTROL PANELS.
8. THIS IS AN ACTIVE FACILITY THAT MUST MAINTAIN OPERATION. PROTECT ELECTRICAL AND CONTROL EQUIPMENT DURING ALL CONSTRUCTION ACTIVITIES FROM DUST AND DEBRIS.

NOTES BY SYMBOL (x)

1. PROPOSED INSTRUMENT PANEL LPU–1. REFEED EXISTING CONTROL CIRCUITS WITH NEW CONDUIT AND CONDUCTORS. ABANDON EXISTING IN–SLAB CONDUITS. REFEED LPU–1 FROM PANEL LP–T5 WITH 3#10, 1"C.

CP&Y, INC.
TBPE FIRM REGISTRATION NO. #F–1741

CITY OF AUSTIN – AUSTIN WATER
HORNSBY BEND BMP CENTRIFUGES

EAST ELECTRICAL ROOM POWER PLAN MODIFICATIONS

STATE OF TEXAS
GERALD P. ROBINSON, JR.
112423
LICENSED
PROFESSIONAL ENGINEER
08/27/2021

NO.	REVISION	BY	DATE

VERIFY SCALE 0 1"
BAR IS ONE INCH ON ORIGINAL DRAWING. IF NOT ONE INCH ON THIS SHEET, ADJUST SCALE

Date: MAY 2021
Designed: G. ROBINSON, P.E.
Drawn: G. LEUENBERGER
Reviewed: G. ROBINSON, P.E.
CP&Y Proj. AUST1600646.01

SHEET
E–19

REFERENCES: AUST1600646.01 Border Base.dwg _Std ENVIRO SEALS.dwg AUST1600646.01_E_ABase.dwg AUST1600646.01_E_ABase2.dwg AUST1600646.01_E_Elec–Room.dwg AUST1600646.01_E_Elec–Base
Aug 19, 2021 – 10:35am C:\pwworking\cpy\gw_cpy\gleuenberger\d0795251\AUST1600646.01_7_E–19_CPY.dwg AUST1600646.01_E_HBase 2.dwg AUST1600646.01_E_HVAC 2.dwg

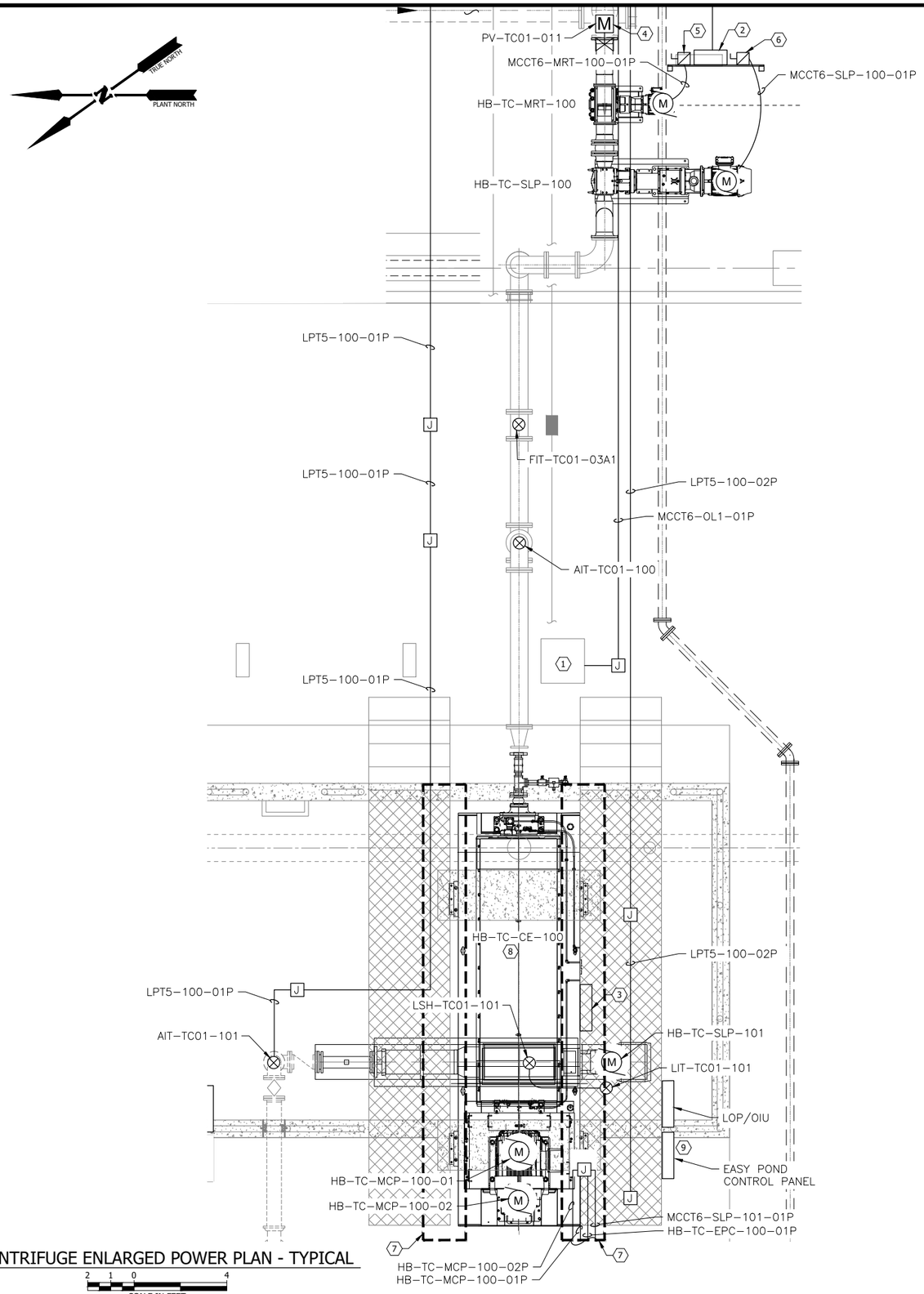

CENTRIFUGE ENLARGED POWER PLAN - TYPICAL

NOTES BY SYMBOL (X)

1. PROPOSED OIL LUBRICATION SYSTEM.
2. MACERATOR CONTROL PANEL.
3. EASY POND CONTROL PANEL.
4. ELECTRIC PLUG VALVE ACTUATOR. 208V, 3ø WITH (3)#10, (1)#10G TO LP-T5 AND (14)#14. TYPICAL OF 5, 1 PER PROCESS TRAIN.
5. PV-TC01-011 FUSED DISCONNECT. FUSED AT 30A. TYPICAL OF 5, 1 PER PROCESS TRAIN. ADD RACK FOR CENTRIFUGE 3, 4, & 5.
6. HB-TC-SLP-100 FUSED DISCONNECT. FUSED AT 60A.
7. REROUTE EXISTING CONDUIT AND CONDUCTORS IN THIS AREA AS REQUIRED AT CENTRIFUGES 300, 400, AND 500 TO AVOID CONFLICT WITH NEW GUARDRAIL. INCLUDE WORK AS PART OF THE BASE BID AT NO ADDITIONAL COST TO THE OWNER. WORK INCLUDES DISCONNECTING AND RECONNECTING CONDUITS AND CONDUCTORS AND MAY REQUIRE ADDITIONAL FITTINGS, AND NEW CONDUITS AND CONDUCTORS. REFER TO AND COORDINATE WITH STRUCTURAL FOR GUARDRAIL LOCATIONS.
8. PER MANUFACTURER RECOMMENDATION, INSTALL A GROUNDING LUG AT THE REAR OF THE CENTRIFUGE AND GROUND USING #4 AWG.
9. PROVIDE WITH INTEGRAL ALARM HORN AND LIGHT.

GENERAL NOTES

1. ELECTRICAL INSTALLATION INCLUDING CONDUIT ROUTING IS DIAGRAMMATIC ONLY. THE CONTRACTOR SHALL SUBMIT A CONDUIT ROUTING PLAN FOR REVIEW AND APPROVAL PRIOR TO STARTING WORK.
2. SINGLE LINE CONDUITS SHOWN FOR CLARITY. SINGLE LINE MAY REPRESENT MULTIPLE CONDUITS.
3. DO NOT COMBINE MULTIPLE POWER CIRCUITS INTO A SINGLE CONDUIT UNLESS NOTED OTHERWISE.
4. DO NOT COMBINE DIGITAL AND ANALOG SIGNALS. SIGNALS TO HAVE SEPARATE J-BOXES AND CONDUIT RUNS.
5. LIMIT CONDUIT BENDS TO A MAXIMUM OF 270 DEGREES BETWEEN PULL POINTS. NOTE THAT NOT ALL PULL PONTS, BOXES AND FITTINGS ARE SHOWN.
6. REFER TO STRUCTURAL, MECHANICAL HVAC, INSTRUMENTATION AND CONTROL DRAWINGS FOR ADDITIONAL INFORMATION.
7. ALL CONDUITS ENTERING CLIMATE CONTROLLED ELECTRICAL ROOMS SHALL HAVE CONDUIT SEALS ON NON-CLIMATE CONTROLLED SIDE. INSTALL UL-LISTED POURED SEALS TO ALL CONDUIT ENTERING/EXITING FIELD CONTROL PANELS.
8. THIS IS AN ACTIVE FACILITY THAT MUST MAINTAIN OPERATION. PROTECT ELECTRICAL AND CONTROL EQUIPMENT DURING ALL CONSTRUCTION ACTIVITIES FROM DUST AND DEBRIS.

CP&Y, INC.
TBPE FIRM REGISTRATION NO. F-1741

CITY OF AUSTIN EST. 1839 HANDED

STATE OF TEXAS GERALD P. ROBINSON, JR. 112423 LICENSED PROFESSIONAL ENGINEER 08/27/2021

NO.	REVISION	BY	DATE

VERIFY SCALE 0 1" BAR IS ONE INCH ON ORIGINAL DRAWING. IF NOT ONE INCH ON THIS SHEET, ADJUST SCALE

CITY OF AUSTIN – AUSTIN WATER
HORNSBY BEND BMP CENTRIFUGES

CENTRIFUGE THICKENING SYSTEM POWER PLAN

Date: MAY 2021
Designed: D. BARNES
Drawn: G.LEUENBERGER
Reviewed: G.ROBINSON, P.E.
CP&Y Proj. AUST1600646.01

SHEET
E-20

REFERENCES: AUST1600646.01 Border Base.dwg —Std ENVIRO SEALS.dwg AUST1600646.01_E_ABase.dwg AUST1600646.01_P_MBase.dwg AUST1600646.01_E_Elec-Base
Aug 27, 2021 – 1:43pm C:\pwworking\cpy\pw_cpy\gleuenberger\d0795251\AUST1600646.01_7_E-20_CPY.dwg AUST1600646.01_E_Elec-Room.dwg AUST1600646.01_P_SBase.dwg AUST1600646.01_E_HVAC 2.dwg AUST1600646.01_E_Elec-Base

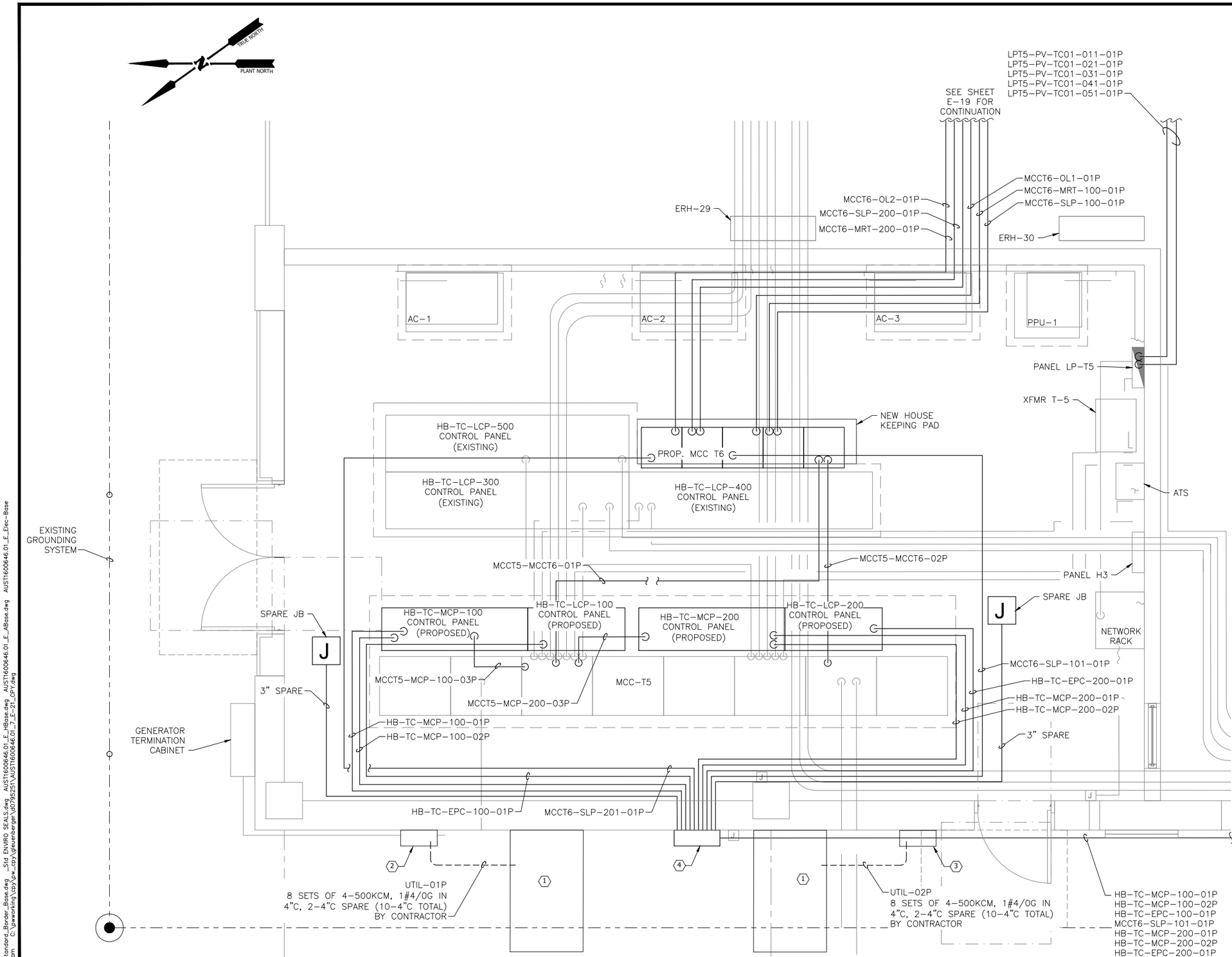

WEST ELECTRICAL ROOM POWER PLAN

NOTE BY SYMBOL (X)

1. PROPOSED CUSTOM SQUARE D QED2 SWITCHBOARD WITH 2500A RF DRAW OUT CIRCUIT BREAKER. BREAKER TO MATCH EXISTING IN MCC-T5. NEMA 4X STAINLESS STEEL CONSTRUCTION. BOTTOM ENTRY, SIDE ACCESS PANELS, SINGLE SECTION, 38"WX60"D (TYP. OF 2). SWITCHBOARDS SHALL SERVE AS THE BUILDING'S NEW SERVICE ENTRANCES. GROUND PER THE NEC AND AUSTIN ENERGY REQUIREMENTS.
2. 9. EXISTING WALL-MOUNTED JUNCTION BOX. INSTALL 10-4"C BETWEEN JUNCTION BOX AND ADJACENT SWITCHBOARD (1).
3. 4'X4'X2' JUNCTION BOX MOUNTED ON THE BUILDING EXTERIOR. MOUNT HIGH ENOUGH TO MINIMIZE CONFLICTS WITH LOUVERS AND EQUIPMENT FROM OTHER DISCIPLINES. COORDINATE WITH ARCHITECTURAL.

GENERAL NOTES

1. ELECTRICAL INSTALLATION INCLUDING CONDUIT ROUTING IS DIAGRAMMATIC ONLY. THE CONTRACTOR SHALL SUBMIT A CONDUIT ROUTING PLAN FOR REVIEW AND APPROVAL PRIOR TO STARTING WORK.
2. SINGLE LINE CONDUITS SHOWN FOR CLARITY. SINGLE LINE MAY REPRESENT MULTIPLE CONDUITS.
3. DO NOT COMBINE MULTIPLE POWER CIRCUITS INTO A SINGLE CONDUIT UNLESS NOTED OTHERWISE.
4. DO NOT COMBINE DIGITAL AND ANALOG SIGNALS. SIGNALS TO HAVE SEPARATE J-BOXES AND CONDUIT RUNS.
5. LIMIT CONDUIT BENDS TO A MAXIMUM OF 270 DEGREES BETWEEN PULL POINTS. NOTE THAT NOT ALL PULL PONTS, BOXES AND FITTINGS ARE SHOWN.
6. REFER TO STRUCTURAL, MECHANICAL HVAC, INSTRUMENTATION AND CONTROL DRAWINGS FOR ADDITIONAL INFORMATION.
7. ALL CONDUITS, UNLESS NOTED OTHERWISE, SHALL EXIT THE ELECTRICAL ROOM THROUGH THE EAST WALL. CORE DRILL THROUGH WALL AS REQUIRED. CORE DRILLING AND CUTTING THROUGH CONTROL JOINTS AND THE CONCRETE CEILING IS PROHIBITED. SEAL PENETRATIONS WITH A UL LISTED FIRE-STOPPING COMPOUND.
8. ALL CONDUITS ENTERING CLIMATE CONTROLLED ELECTRICAL ROOMS SHALL HAVE CONDUIT SEALS ON NON-CLIMATE CONTROLLED SIDE. INSTALL UL-LISTED POURED SEALS TO ALL CONDUIT ENTERING/EXITING FIELD CONTROL PANELS.
9. THIS IS AN ACTIVE FACILITY THAT MUST MAINTAIN OPERATION. PROTECT ELECTRICAL AND CONTROL EQUIPMENT DURING ALL CONSTRUCTION ACTIVITIES FROM DUST AND DEBRIS.

CP&Y, INC.
TBPE FIRM REGISTRATION NO. #F-1741

CITY OF AUSTIN
GERALD P. ROBINSON, JR.
112423
LICENSED
PROFESSIONAL ENGINEER
STATE OF TEXAS
08/27/2021

NO.	REVISION	BY	DATE

VERIFY SCALE 0 1" BAR IS ONE INCH ON ORIGINAL DRAWING. IF NOT ONE INCH ON THIS SHEET, ADJUST SCALE

CITY OF AUSTIN – AUSTIN WATER
HORNSBY BEND BMP CENTRIFUGES

WEST ELECTRICAL ROOM POWER PLAN

Date: MAY 2021
Designed: D. BARNES
Drawn: G.LEUENBERGER
Reviewed: G.ROBINSON, P.E.
CP&Y Proj. AUST1600646.01

SHEET
E-21

REFERENCES: _CPY_Standard_Border_Base.dwg _Std ENVIRO SEALS.dwg AUST1600646.01_E_HBase.dwg AUST1600646.01_E_ABase.dwg AUST1600646.01_E_Elec-Base
Aug 19, 2021 – 10:48am C:\pwworking\cpy\pw_cpy\gleuenberger\d0795251\AUST1600646.01_7_E-21_CPY.dwg

GENERAL NOTES

1. ELECTRICAL INSTALLATION INCLUDING CONDUIT ROUTING IS DIAGRAMMATIC ONLY. THE CONTRACTOR SHALL SUBMIT A CONDUIT ROUTING PLAN FOR REVIEW AND APPROVAL PRIOR TO STARTING WORK.
2. SINGLE LINE CONDUITS SHOWN FOR CLARITY. SINGLE LINE MAY REPRESENT MULTIPLE CONDUITS.
3. DO NOT COMBINE MULTIPLE POWER CIRCUITS INTO A SINGLE CONDUIT UNLESS NOTED OTHERWISE.
4. DO NOT INSTALL DIGITAL AND ANALOG CONDUCTORS IN THE SAME CONDUIT. SIGNALS TO HAVE SEPARATE J-BOXES AND CONDUIT RUNS.
5. LIMIT CONDUIT BENDS TO A MAXIMUM OF 270 DEGREES BETWEEN PULL POINTS. NOTE THAT NOT ALL PULL PONTS, BOXES AND FITTINGS ARE SHOWN.
6. REFER TO STRUCTURAL, MECHANICAL HVAC, INSTRUMENTATION AND CONTROL DRAWINGS FOR ADDITIONAL INFORMATION.
7. ALL CONDUITS ENTERING CLIMATE CONTROLLED ELECTRICAL ROOMS SHALL HAVE CONDUIT SEALS ON NON-CLIMATE CONTROLLED SIDE. INSTALL UL-LISTED POURED SEALS TO ALL CONDUIT ENTERING/EXITING FIELD CONTROL PANELS.
8. ALL CONDUITS, UNLESS NOTED OTHERWISE, SHALL EXIT THE ELECTRICAL ROOM THROUGH THE EAST WALL. CORE DRILL THROUGH WALL AS REQUIRED. CORE DRILLING AND CUTTING THROUGH CONTROL JOINTS AND THE CONCRETE CEILING IS PROHIBITED. SEAL PENETRATIONS WITH A UL LISTED FIRE-STOPPING COMPOUND.
9. THIS IS AN ACTIVE FACILITY THAT MUST MAINTAIN OPERATION. PROTECT ELECTRICAL AND CONTROL EQUIPMENT DURING ALL CONSTRUCTION ACTIVITIES FROM DUST AND DEBRIS.
10. REFER TO SHEETS E-26 AND E-27 FOR JUNCTION BOX, CONDUIT AND CONDUCTOR DETAILS.

NOTES BY SYMBOL (X)

1. MACERATOR CONTROL PANEL. PROVIDE 16#14 TO CENTRIFUGE LCP IN WEST ELECTRICAL ROOM.
2. PROVIDE CONDUIT SEAL USING POLYWATER T250 FOR ALL CONDUITS PENETRATING WALL FROM EQUIPMENT AREA.
3. PROPOSED OIL LUBRICATION SYSTEM.
4. PROPOSED EASY POND CONTROL PANEL, MOUNT BETWEEN ODOR CONTROL DUCT, SUPPORTS, 4' ABOVE PLATFORM.
5. MJB1-C120 JUNCTION BOX
6. MJB2-C120 JUNCTION BOX
7. SJB1-CmA JUNCTION BOX
8. SJB2-CmA JUNCTION BOX
9. OJB1-C120 JUNCTION BOX
10. OJB2-C120 JUNCTION BOX
11. EJB1-C120 AND EJB1-C24 JUNCTION BOXES
12. EJB2-C120 AND EJB2-C24 JUNCTION BOXES
13. DJB1-C120 AND DJB1-CmA JUNCTION BOXES
14. DJB2-C120 AND DJB2-CmA JUNCTION BOXES
15. CJB1-C120, CJB1-CmA AND CJB1-C24 JUNCTION BOXES
16. CJB2-C120, CJB2-CmA AND CJB2-C24 JUNCTION BOXES
17. C6JB1 JUNCTION BOX
18. C6JB2 JUNCTION BOX
19. INSTALL 2#14, 1"C IN HB-LS-01C AND (5)2#16 TSP IN 1"C (HB-LS-02C) FROM LPU-1 TO EXISTING LS CONTROL PANEL.
20. EXISTING LS CONTROL PANEL. INSTALL NEW CONDUCTORS TO MATCH EXISTING. PULL THRU EXISTING CONDUITS. LABEL CABLES AS HB-LS-01C AND HB-LS-02C.
21. PULL BACK EXISTING CONDUCTORS THROUGH THE FLEXIBLE CONDUIT. REPLACE FLEXIBLE CONDUITS WITH 1" RIGID ALC. RUN CONDUIT ON THE FLOOR PARALLEL AND PERPENDICULAR TO THE STRUCTURE. PULL EXISTING CONDUCTORS THROUGH NEW CONDUITS AND TERMINATE IN VALVE CONTROL STATION.
22. CONDUITS PENETRATE WALL THEN TURN VERTICALLY. RUN EAST ALONG THE UNDERSIDE OF THE ROOF DECK THEN TURN SOUTH, THE WEST AS SHOWN TO JUNCTION BOXES/LOADS. MOUNT USING STAINLESS STEEL HARDWARE, HANGARS, AND SUPPORTS. USE EXPANSION AND DEFLECTION FITTINGS WHEN CROSSING EXPANSION JOINTS.

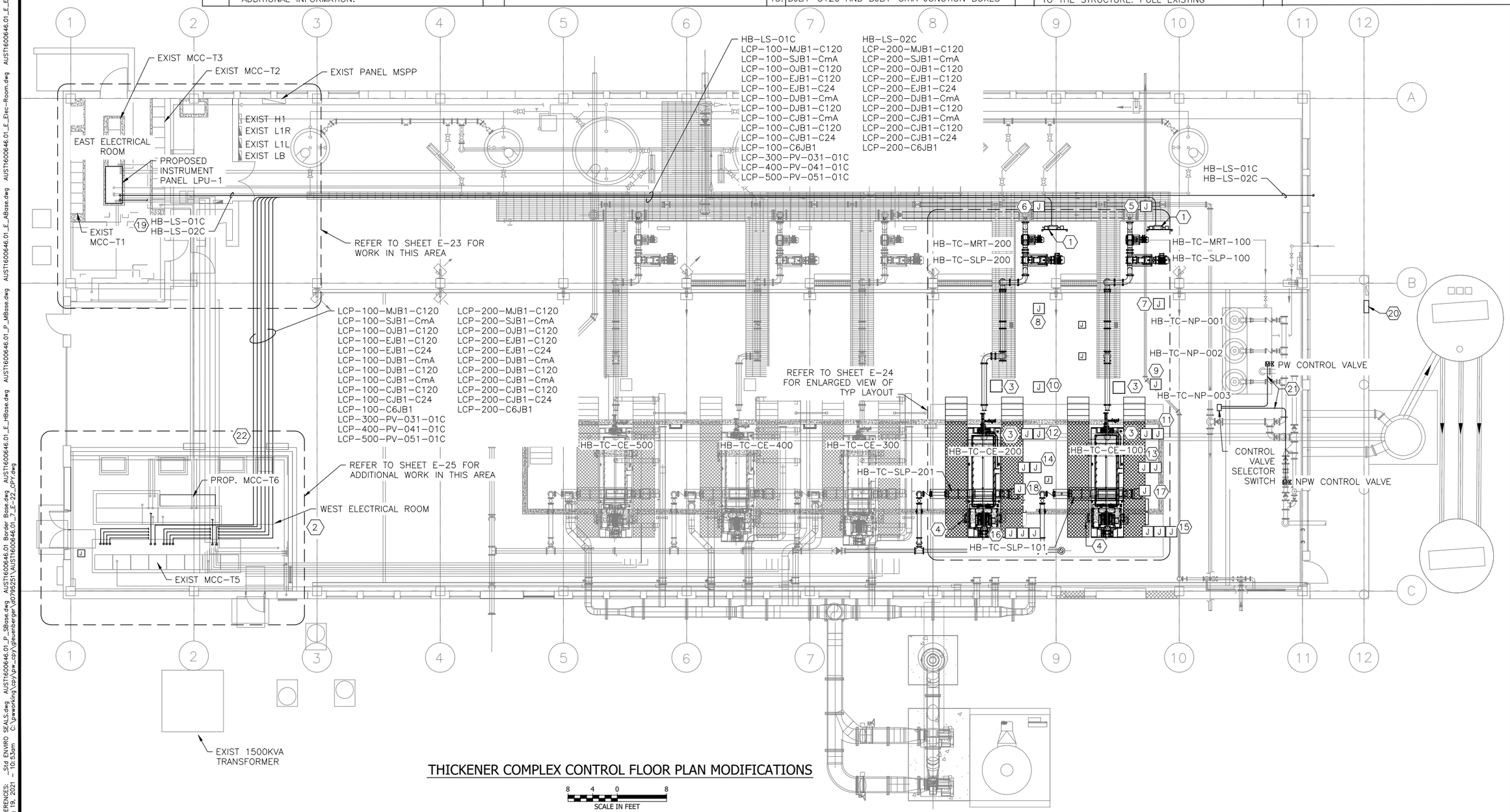

THICKENER COMPLEX CONTROL FLOOR PLAN MODIFICATIONS

8 4 0 8
SCALE IN FEET

CP&Y, INC.
TBPE FIRM REGISTRATION NO. #F-1741

CITY OF AUSTIN 1839 FOUNDED

STATE OF TEXAS
GERALD P. ROBINSON, JR.
112423
LICENSED
PROFESSIONAL ENGINEER
08/27/2021

NO.	REVISION	BY	DATE

VERIFY SCALE 0 1"
BAR IS ONE INCH ON ORIGINAL DRAWING. IF NOT ONE INCH ON THIS SHEET, ADJUST SCALE

CITY OF AUSTIN – AUSTIN WATER
HORNSBY BEND BMP CENTRIFUGES
THICKENER COMPLEX
CONTROL FLOOR PLAN
MODIFICATIONS

Date: MAY 2021
Designed: D. BARNES
Drawn: G.LEUENBERGER
Reviewed: G.ROBINSON, P.E.
CP&Y Proj: AUST1600646.01

SHEET
E-22

REFERENCES: _Std ENVIRO SEALS.dwg AUST1600646.01_P_SBase.dwg AUST1600646.01 Border Base.dwg AUST1600646.01_E_HBase.dwg AUST1600646.01_P_MBase.dwg AUST1600646.01_E_ABase.dwg AUST1600646.01_E_Elec-Room.dwg AUST1600646.01_E_Elec-Base
Aug 19, 2021 – 10:53am C:\pwworking\cpy\pw_cpy\gleuenberger\d0795251\AUST1600646.01_7_E-22_CPY.dwg

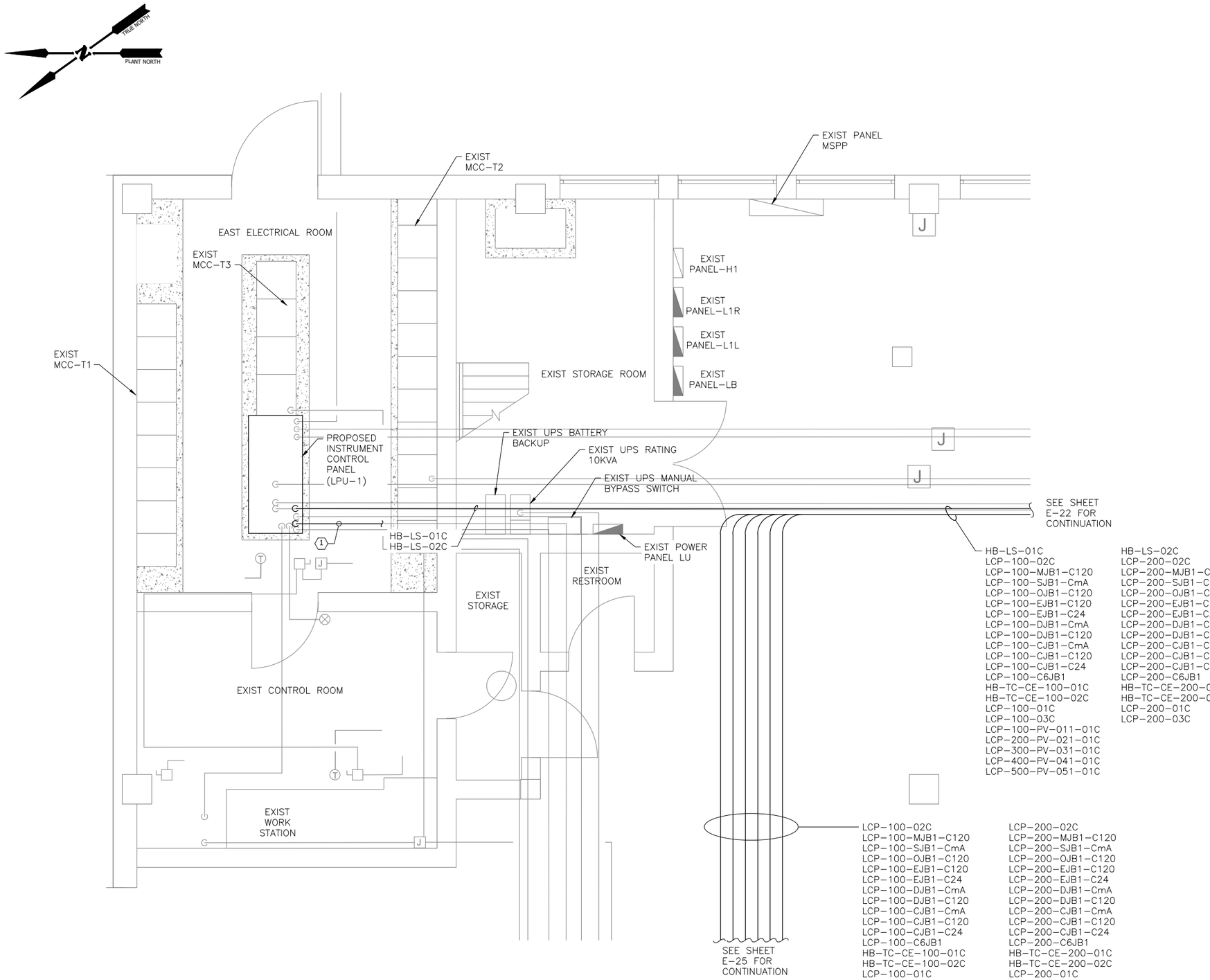

EAST ELECTRICAL ROOM CONTROL PLAN MODIFICATIONS

GENERAL NOTES

1. ELECTRICAL INSTALLATION INCLUDING CONDUIT ROUTING IS DIAGRAMMATIC ONLY. THE CONTRACTOR SHALL SUBMIT A CONDUIT ROUTING PLAN FOR REVIEW AND APPROVAL PRIOR TO STARTING WORK.
2. SINGLE LINE CONDUITS SHOWN FOR CLARITY. SINGLE LINE MAY REPRESENT MULTIPLE CONDUITS.
3. DO NOT COMBINE MULTIPLE POWER CIRCUITS INTO A SINGLE CONDUIT UNLESS NOTED OTHERWISE.
4. DO NOT COMBINE DIGITAL AND ANALOG SIGNALS. SIGNALS TO HAVE SEPARATE J–BOXES AND CONDUIT RUNS.
5. LIMIT CONDUIT BENDS TO A MAXIMUM OF 270 DEGREES BETWEEN PULL POINTS. NOTE THAT NOT ALL PULL POINTS, BOXES AND FITTINGS ARE SHOWN.
6. REFER TO STRUCTURAL, MECHANICAL HVAC, INSTRUMENTATION AND CONTROL DRAWINGS FOR ADDITIONAL INFORMATION.
7. ALL CONDUITS ENTERING CLIMATE CONTROLLED ELECTRICAL ROOMS SHALL HAVE CONDUIT SEALS ON NON–CLIMATE CONTROLLED SIDE. INSTALL UL–LISTED POURED SEALS TO ALL CONDUIT ENTERING/EXITING FIELD CONTROL PANELS.
8. THIS IS AN ACTIVE FACILITY THAT MUST MAINTAIN OPERATION. PROTECT ELECTRICAL AND CONTROL EQUIPMENT DURING ALL CONSTRUCTION ACTIVITIES FROM DUST AND DEBRIS.

NOTES BY SYMBOL (X)

1. CAT 6 CABLE IN 1"C TO NETWORK RACK IN WEST ELECTRICAL ROOM.

CP&Y, INC.
TBPE FIRM REGISTRATION NO. F–1741

CITY OF AUSTIN EST. 1839 FOUNDED

STATE OF TEXAS GERALD P. ROBINSON, JR. 112423 LICENSED PROFESSIONAL ENGINEER 08/27/2021

NO.	REVISION	BY	DATE

VERIFY SCALE 0 1" BAR IS ONE INCH ON ORIGINAL DRAWING. IF NOT ONE INCH ON THIS SHEET, ADJUST SCALE

CITY OF AUSTIN – AUSTIN WATER
HORNSBY BEND BMP CENTRIFUGES

EAST ELECTRICAL ROOM CONTROL PLAN MODIFICATIONS

Date: MAY 2021
Designed: G. ROBINSON, P.E.
Drawn: G. LEUENBERGER
Reviewed: G. ROBINSON, P.E.
CP&Y Proj. AUST1600646.01

SHEET
E–23

REFERENCES: AUST1600646.01 Border Base.dwg __Std ENVIRO SEALS.dwg AUST1600646.01_E_ABase.dwg AUST1600646.01_E_ABase2.dwg AUST1600646.01_E_HBase 2.dwg AUST1600646.01_E_HVAC 2.dwg AUST1600646.01_E_Elec–Room.dwg AUST1600646.01_E_Elec–Base
Aug 19, 2021 – 10:59am C:\pwworking\cpy\pw_cpy\gleuenberger\d0795251\AUST1600646.01_7_E–23_CPY.dwg

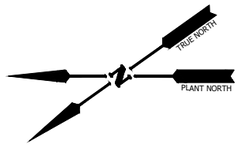

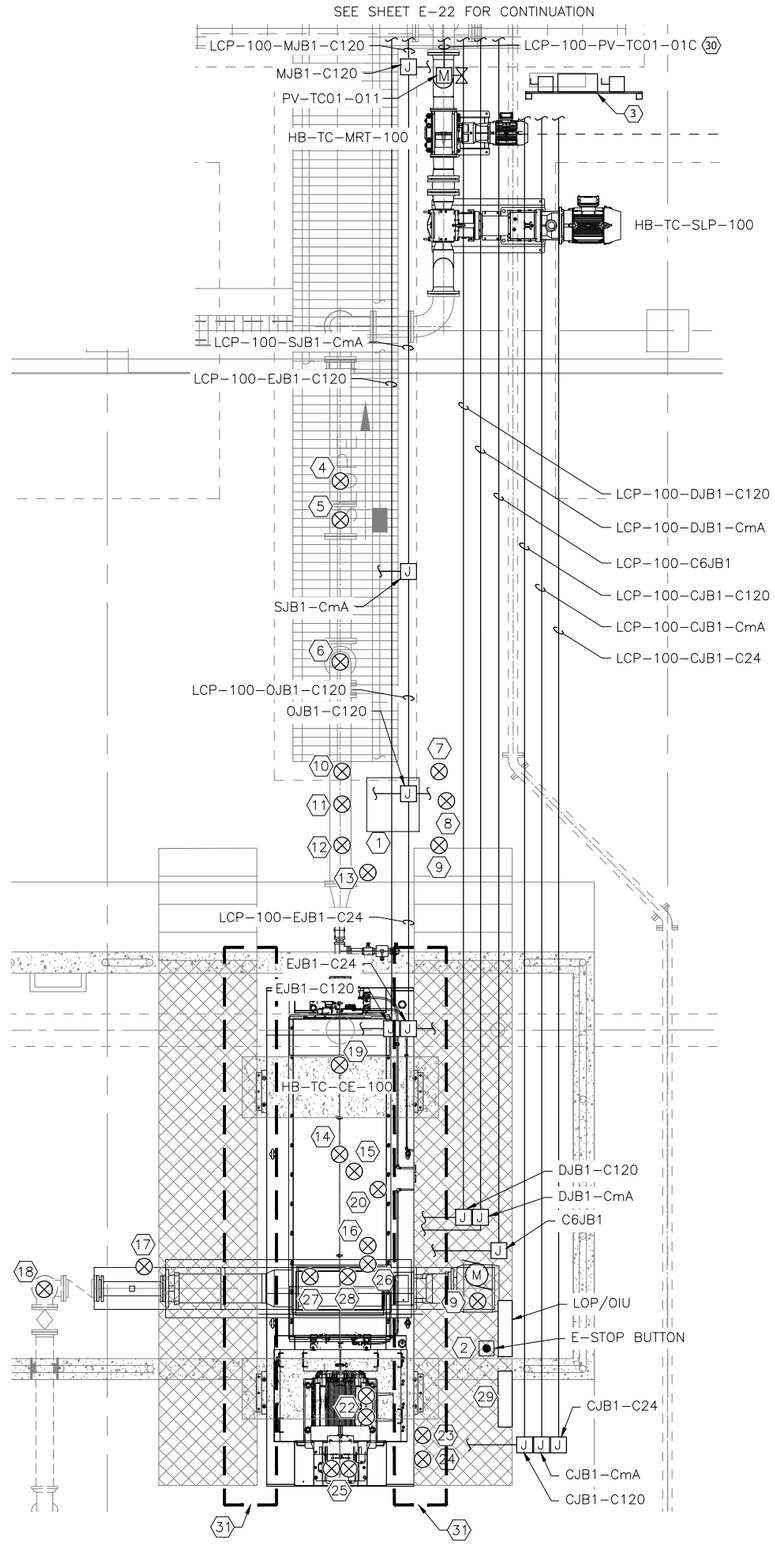

CENTRIFUGE ENLARGED CONTROL PLAN

2 1 0 4
SCALE IN FEET

GENERAL NOTES

1. ELECTRICAL INSTALLATION INCLUDING CONDUIT ROUTING IS DIAGRAMMATIC ONLY. THE CONTRACTOR SHALL SUBMIT A CONDUIT ROUTING PLAN FOR REVIEW AND APPROVAL PRIOR TO STARTING WORK.
2. SINGLE LINE CONDUITS SHOWN FOR CLARITY. SINGLE LINE MAY REPRESENT MULTIPLE CONDUITS.
3. DO NOT COMBINE MULTIPLE POWER CIRCUITS INTO A SINGLE CONDUIT UNLESS NOTED OTHERWISE.
4. DO NOT COMBINE DIGITAL AND ANALOG SIGNALS. SIGNALS TO HAVE SEPARATE J-BOXES AND CONDUIT RUNS.
5. LIMIT CONDUIT BENDS TO A MAXIMUM OF 270 DEGREES BETWEEN PULL POINTS. NOTE THAT NOT ALL PULL POINTS, BOXES AND FITTINGS ARE SHOWN.
6. REFER TO STRUCTURAL, MECHANICAL HVAC, INSTRUMENTATION AND CONTROL DRAWINGS FOR ADDITIONAL INFORMATION.
7. PROVIDE CLEAR COVERS FOR ALL E-STOPS.
8. THIS IS AN ACTIVE FACILITY THAT MUST MAINTAIN OPERATION. PROTECT ELECTRICAL AND CONTROL EQUIPMENT DURING ALL CONSTRUCTION ACTIVITIES FROM DUST AND DEBRIS.
9. ALL CONDUITS ENTERING CLIMATE CONTROLLED ELECTRICAL ROOMS SHALL HAVE CONDUIT SEALS ON NON-CLIMATE CONTROLLED SIDE. INSTALL UL-LISTED POURED SEALS TO ALL CONDUIT ENTERING/EXITING FIELD CONTROL PANELS.

NOTES BY SYMBOL (X)

1. PROPOSED OIL LUBRICATION SYSTEM.
2. LOCATION OF E-STOP BUTTON TO BE COORDINATED WITH OWNER AND CENTRIFUGE MANUFACTURER.
3. MACERATOR CONTROL PANEL.
4. SLUDGE FLOWMETER, FIT-TC01-03A1-01C
5. POLYMER FEED FLOWMETER, FIT-TC01-04A1-01C
6. MICROWAVE SOLIDS SENSOR, AIT-TC01-100-01C
7. LUBE UNIT FEED END FLOW, FSL-TC01-011
8. DRIVE END FLOW, FSL-TC01-012
9. LUBE UNIT EASY POND FLOW, FSL-TC01-013
10. LUBE UNIT PRESSURE, PSH-TC01-012
11. CENTRIFUGE BEARING LUBE COOLING SOLENOID VALVE, SV-TC01-013
12. LUBE UNIT FILTER PRESSURE, PSH-TC01-013
13. LIQUID SIDE PRESSURE SWITCH
14. FEED END VIBRATION MONITOR
15. CENTRIFUGE BEARING TEMP FEED END
16. CENTRIFUGE BEARING TEMP DRIVE END
17. THICKENER SLUDGE DISCHARGE PRESSURE, PSH-TC01-011
18. MICROWAVE SOLIDS SENSOR, AIT-TC01-101
19. CENTRIFUGE WASHWATER SOLENOID VALVE
20. DRIVE END VIBRATION MONITOR
21. SOLIDS DISCHARGE PUMP STATOR THERMISTER, TSH-TC01-011
22. SCROLL T-STAT AND HEATER
23. COVER SWITCH 1
24. COVER SWITCH 2
25. BOWL T-STATS AND HEATER
26. BOWL SPEED SENSOR
27. DISCHARGE SOLIDS CHUTE LEVEL TRANSMITTER, LIT-TC01-011
28. DISCHARGE SOLIDS CHUTE LEVEL SWITCH, LSH-TC01-011
29. EASYPOND CONTROL PANEL
30. PLUG VALVE ACTUATOR TYPICAL OF:
    PV-TC01-011
    PV-TC01-021
    PV-TC01-031
    PV-TC01-041
    PV-TC01-051
31. REROUTE EXISTING CONDUIT AND CONDUCTORS IN THIS AREA AS REQUIRED AT CENTRIFUGES 300, 400, AND 500 TO AVOID CONFLICT WITH NEW GUARDRAIL. INCLUDE WORK AS PART OF THE BASE BID AT NO ADDITIONAL COST TO THE OWNER. WORK INCLUDES DISCONNECTING AND RECONNECTING CONDUITS AND CONDUCTORS AND MAY REQUIRE ADDITIONAL FITTINGS, AND NEW CONDUITS AND CONDUCTORS. REFER TO AND COORDINATE WITH STRUCTURAL FOR GUARDRAIL LOCATIONS.

CP&Y, INC.
TBPE FIRM REGISTRATION NO. #F-1741

CITY OF AUSTIN 1839 HONORED

STATE OF TEXAS GERALD P. ROBINSON, JR. 112423 LICENSED PROFESSIONAL ENGINEER 08/27/2021

NO.	REVISION	BY	DATE

VERIFY SCALE 0 1"
BAR IS ONE INCH ON ORIGINAL DRAWING. IF NOT ONE INCH ON THIS SHEET, ADJUST SCALE

CITY OF AUSTIN – AUSTIN WATER
HORNSBY BEND BMP CENTRIFUGES

CENTRIFUGE THICKENING SYSTEM CONTROL PLAN

Date: MAY 2021
Designed: D. BARNES
Drawn: G.LEUENBERGER
Reviewed: G.ROBINSON, P.E.
CP&Y Proj: AUST1600646.01

SHEET
E-24

REFERENCES: AUST1600646.01 Border Base.dwg _Std ENVIRO SEALS.dwg AUST1600646.01_E_ABase.dwg AUST1600646.01_P_MBase.dwg AUST1600646.01_P_SBase
Aug 19, 2021 – 11:03am C:\pwworking\cpy\pw_cpy\gleuenberger\d0795251\AUST1600646.01_7_E-24_CPY.dwg

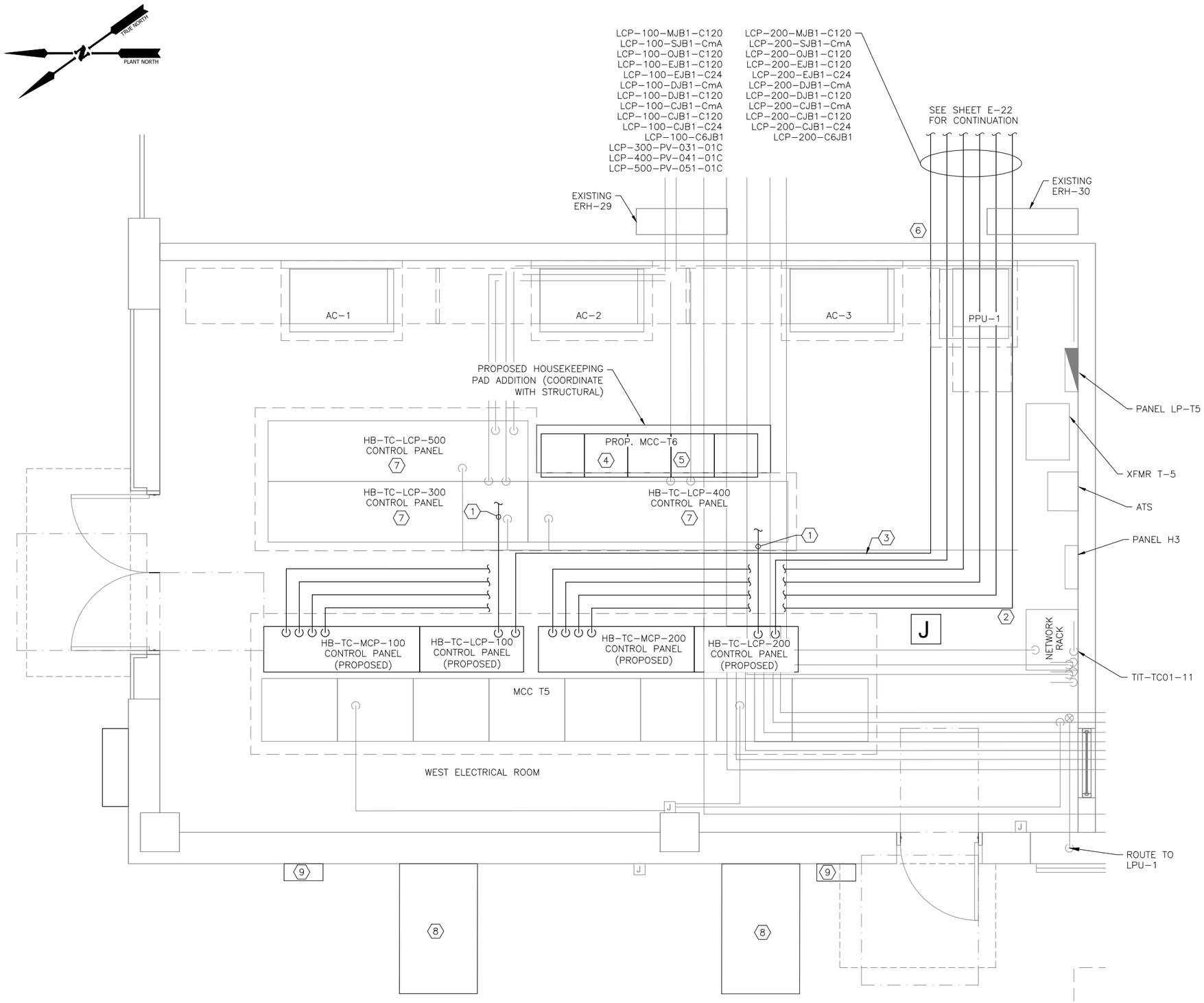

WEST ELECTRICAL ROOM CONTROL PLAN

2 1 0 2
SCALE IN FEET

NOTES BY SYMBOL (X)

1. INSTALL (1) CAT 6 CONDUCTOR IN 1"C FROM LCP TO NETWORK SWITCH.
2. ROUTE/INSTALL CONDUITS ONTO EXISTING CONDUIT SYSTEM. TAKE CARE NOT TO OBSTRUCT EXISTING CONDULETS, BOXES AND PULL POINTS. MODIFY/WIDEN CONDUIT RACK AS REQUIRED.
3. ALL CONDUITS, UNLESS NOTED OTHERWISE, SHALL EXIT THE ELECTRICAL ROOM THROUGH THE EAST WALL. CORE DRILL THROUGH THE WALL AS REQUIRED. CORE DRILLING AND/CUTTING THROUGH CONTROL JOINTS AND THE CONCRETE CEILING IS PROHIBITED. SEAL PENETRATIONS WITH A UL LISTED FIRE-STOPPING COMPOUND.
4. INSTALL THE FOLLOWING BETWEEN MCC-T6 BUCKETS AND HB-TC-LCP-100:
   - HB-TC-SLP-100-VFD: 12#14, 1"C, (4)2#16 TSP, 1"C
   - HB-TC-MRT-100: 12#14, 1"C
   - HB-TC-SLP-101 VFD: 12#14, 1"C, (4)2#16 TSP, 1"C
   - FUTURE POLYMER FEED PUMP #1 VFD: 12#14, 1"C, (4)2#16 TSP, 1"C.
5. INSTALL THE FOLLOWING BETWEEN MCC-T6 BUCKETS AND HB-TC-LCP-200:
   - HB-TC-SLP-200-VFD: 12#14, 1"C, (4)2#16 TSP, 1"C
   - HB-TC-MRT-200: 12#14, 1"C
   - HB-TC-SLP-201 VFD: 12#14, 1"C, (4)2#16 TSP, 1"C
   - FUTURE POLYMER FEED PUMP #2 VFD: 12#14, 1"C, (4)2#16 TSP, 1"C.
6. ALL CONDUITS, UNLESS NOTED OTHERWISE, SHALL EXIT THE ELECTRICAL ROOM THROUGH THE EAST WALL. CORE DRILL THROUGH WALL AS REQUIRED. CORE DRILLING AND CUTTING THROUGH CONTROL JOINTS AND THE CONCRETE CEILING IS PROHIBITED. SEAL PENETRATIONS WITH A UL LISTED FIRE-STOPPING COMPOUND.
7. INSTALL CONTROL CONDUCTORS FROM LCP TO PLUG VALVE. 14#14+G IN 1"C, LCP-X00-PV-0X1-01C, WHERE "X" DENOTES PROCESS TRAIN NUMBER 1 THROUGH 5.
8. PROPOSED CUSTOM SQUARE D QED2 SWITCHBOARD WITH 2500A RF DRAW OUT CIRCUIT BREAKER. BREAKER TO MATCH EXISTING IN MCC-T5. NEMA 4X STAINLESS STEEL CONSTRUCTION. BOTTOM ENTRY, SIDE ACCESS PANELS, SINGLE SECTION, 38"WX60"D (TYP. OF 2). SWITCHBOARDS SHALL SERVE AS THE BUILDING'S NEW SERVICE ENTRANCES. GROUND PER THE NEC AND AUSTIN ENERGY REQUIREMENTS.
9. EXISTING WALL-MOUNTED JUNCTION BOX. INSTALL 10-4"C BETWEEN JUNCTION BOX AND ADJACENT SWITCHBOARD (8).

GENERAL NOTES

1. REFER TO STRUCTURAL AND HVAC SHEETS FOR ADDITIONAL INFORMATION.
2. DO NOT COMBINE DIGITAL AND ANALOG SIGNALS. SIGNALS TO HAVE SEPARATE J-BOXES AND CONDUIT RUNS.
3. INTERCONNECTION CONDUITS AND CONDUCTORS WITHIN WEST ELECTRICAL ROOM ARE NOT SHOWN BUT ARE REQUIRED. REFER TO SHEET E-30 THRU E-38 FOR WIRING BETWEEN LCPs, MCPs AND MCC-T6. COORDINATE WITH PROCESS EQUIPMENT VENDOR. PROVIDE CONTROL WIRES AS REQUIRED.
4. THIS IS AN ACTIVE FACILITY THAT MUST MAINTAIN OPERATION. PROTECT ELECTRICAL AND CONTROL EQUIPMENT DURING ALL CONSTRUCTION ACTIVITIES FROM DUST AND DEBRIS.
5. ALL CONDUITS ENTERING CLIMATE CONTROLLED ELECTRICAL ROOMS SHALL HAVE CONDUIT SEALS ON NON-CLIMATE CONTROLLED SIDE. INSTALL UL-LISTED POURED SEALS TO ALL CONDUIT ENTERING/EXITING FIELD CONTROL PANELS.

CP&Y, INC.
TBPE FIRM REGISTRATION NO. #F-1741

NO.	REVISION	BY	DATE

VERIFY SCALE 0 1"
BAR IS ONE INCH ON ORIGINAL DRAWING. IF NOT ONE INCH ON THIS SHEET, ADJUST SCALE

CITY OF AUSTIN – AUSTIN WATER
HORNSBY BEND BMP CENTRIFUGES

WEST ELECTRICAL ROOM CONTROL PLAN

Date: MAY 2021
Designed: D. BARNES
Drawn: G.LEUENBERGER
Reviewed: G.ROBINSON, P.E.
CP&Y Proj: AUST1600646.01

SHEET
E-25

REFERENCES: AUST1600646.01 Border Base.dwg __Std ENVIRO SEALS.dwg AUST1600646.01_E_Elec-Room.dwg 14010-porch.dwg AUST1600646.01_E_HBase.dwg
Aug 19, 2021 – 11:09am C:\pwworking\cpy\pw_cpy\gleuenberger\d0795251\AUST1600646.01_7_E-25_CPY.dwg
AUST1600646.01_E_ABase.dwg AUST1600646.01_E_Elec-Base

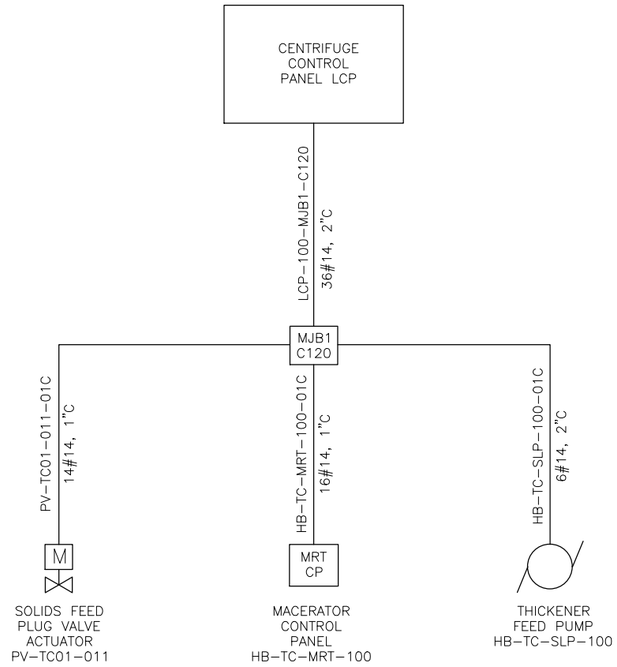

MACERATOR/FEED SOLID AREA 120 V CONTROL BLOCK DIAGRAM

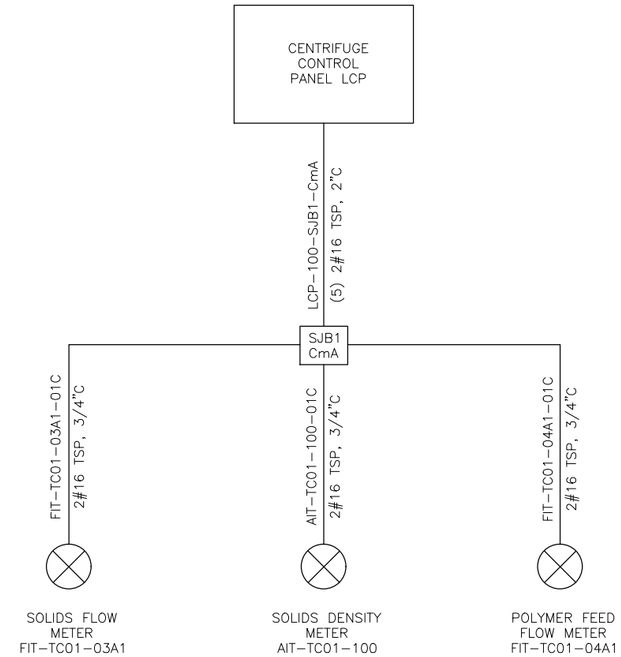

SOLIDS & POLYMER FEED
INSTRUMENTATION ANALOG CONTROLS BLOCK DIAGRAM

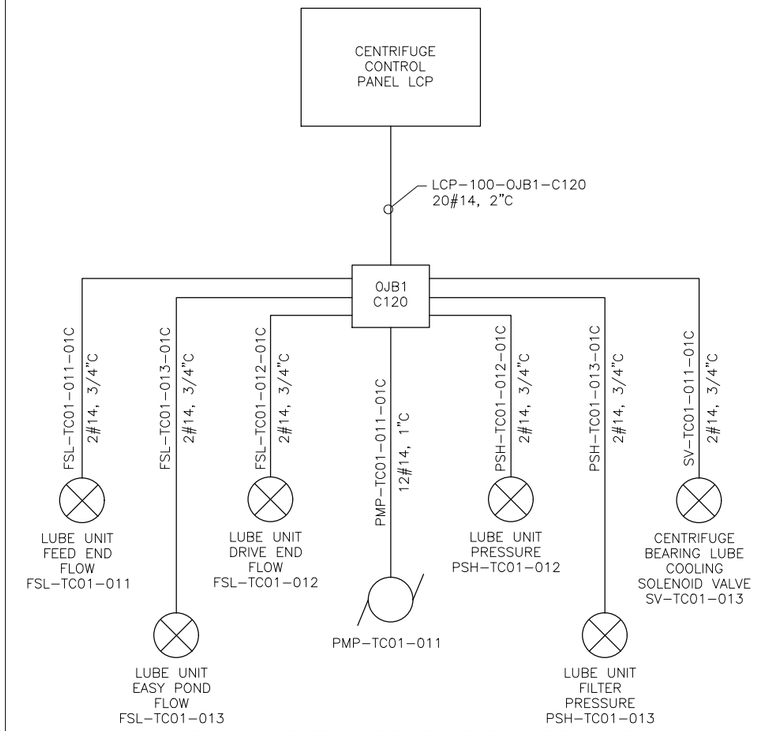

OIL LUBE SYSTEM 120V CONTROL BLOCK DIAGRAM

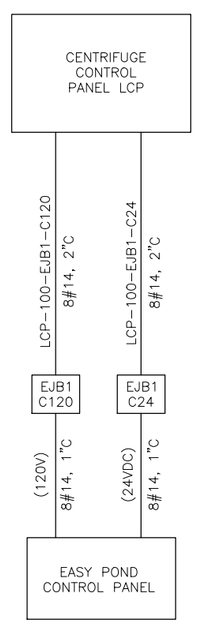

EASY POND 24VDC CONTROL BLCOK DIAGRAM

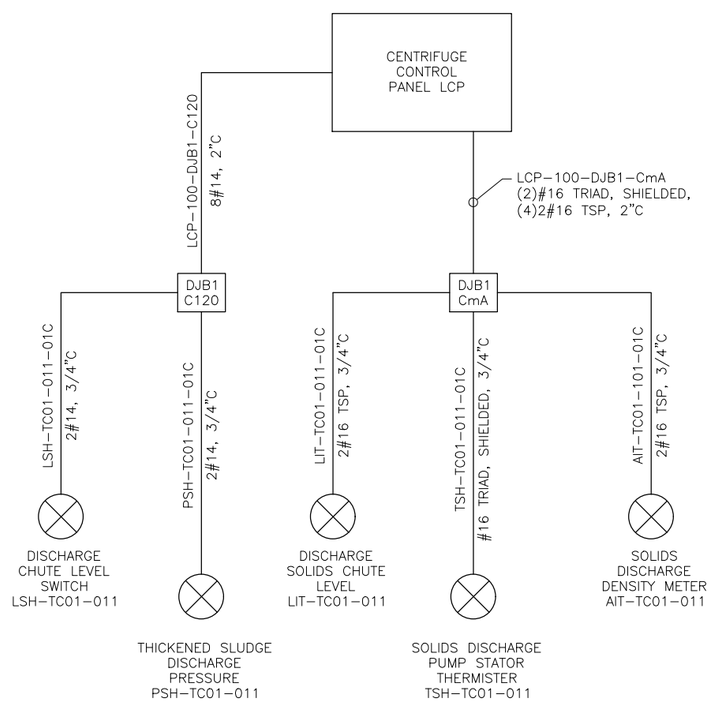

SLUDGE DISCHARGE 120V & ANALOG CONTROL BLOCK DIAGRAM

ON THIS SHEET TRAIN #1 SHOWN, TRAIN #2 SIMULAR, PROVIDE CONDUIT AND CONDUCTORS FOR EACH

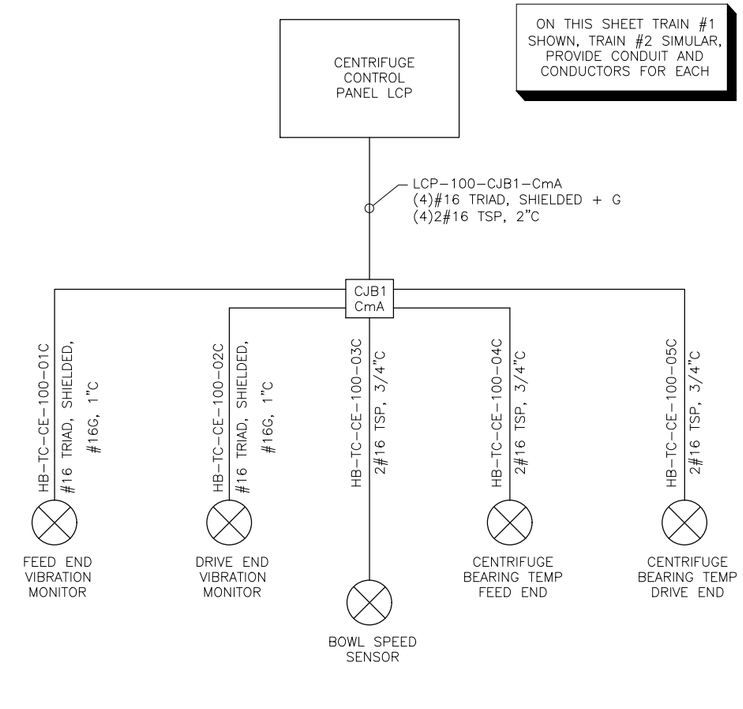

CENTRIFUGE ANALOG CONTROL BLOCK DIAGRAM

CP&Y, INC.
TBPE FIRM REGISTRATION NO. F-1741

CITY OF AUSTIN ESTD. 1839 INCORPORATED 1871

STATE OF TEXAS
GERALD P. ROBINSON, JR.
112423
LICENSED
PROFESSIONAL ENGINEER
08/27/2021

NO.	REVISION	BY	DATE

VERIFY SCALE 0 1"
BAR IS ONE INCH ON ORIGINAL DRAWING. IF NOT ONE INCH ON THIS SHEET, ADJUST SCALE

CITY OF AUSTIN – AUSTIN WATER
HORNSBY BEND BMP CENTRIFUGES

ELECTRICAL CONTROLS BLOCK DIAGRAMS (SHEET 1 OF 2)

Date: MAY 2021
Designed: D. BARNES
Drawn: G.LEUENBERGER
Reviewed: G.ROBINSON, P.E.
CP&Y Proj. AUST1600646.01

SHEET
E-26

REFERENCES: AUST1600646.01 Border Base.dwg __Std ENVIRO SEALS
Aug 19, 2021 – 11:11am C:\pwworking\cpy\pw_cpy\gleuenberger\d0795251\AUST1600646.01_7_E-26_CPY.dwg

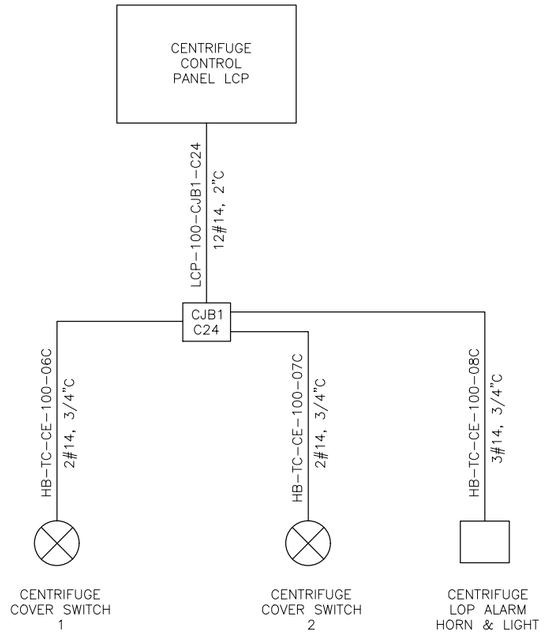

CENTRIFUGE 24VDC CONTROL BLOCK DIAGRAM

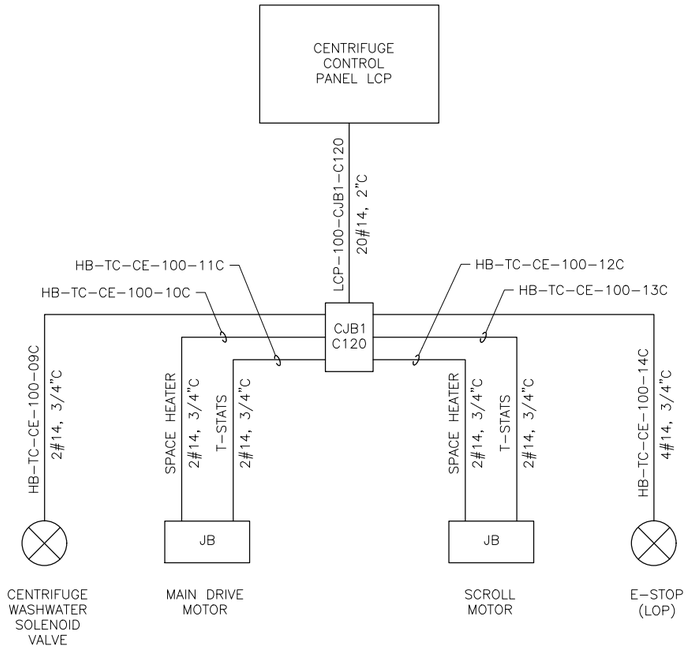

CENTRIFUGE 120V CONTROL BLOCK DIAGRAM

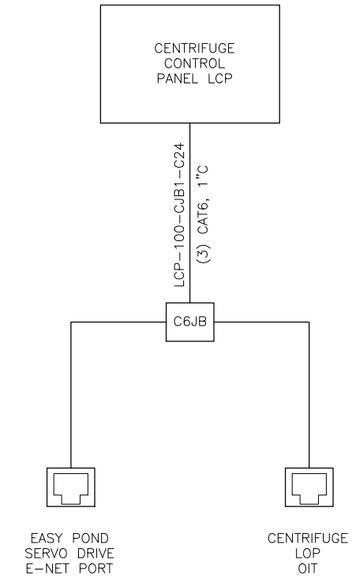

FIELD ETHERNET CONNECTIONS BLOCK DIAGRAM

ON THIS SHEET TRAIN #1 SHOWN, TRAIN #2 SIMULAR, PROVIDE CONDUIT AND CONDUCTORS FOR EACH

CP&Y, INC.
TBPE FIRM REGISTRATION NO. F-1741

CITY OF AUSTIN

STATE OF TEXAS
GERALD P. ROBINSON, JR.
112423
LICENSED
PROFESSIONAL ENGINEER
08/27/2021

NO.	REVISION	BY	DATE

VERIFY SCALE 0 1"
BAR IS ONE INCH ON ORIGINAL DRAWING. IF NOT ONE INCH ON THIS SHEET, ADJUST SCALE

CITY OF AUSTIN – AUSTIN WATER
HORNSBY BEND BMP CENTRIFUGES

ELECTRICAL CONTROLS BLOCK DIAGRAMS (SHEET 2 OF 2)

Date: MAY 2021
Designed: D. BARNES
Drawn: G.LEUENBERGER
Reviewed: G.ROBINSON, P.E.
CP&Y Proj: AUST1600646.01

SHEET
E-27

REFERENCES: AUST1600646.01 Border Base.dwg _Std ENVIRO SEALS
Aug 19, 2021 – 11:19am C:\pwworking\cpy\pw_cpy\gleuenberger\d0795251\AUST1600646.01_7_E-27_CPY.dwg

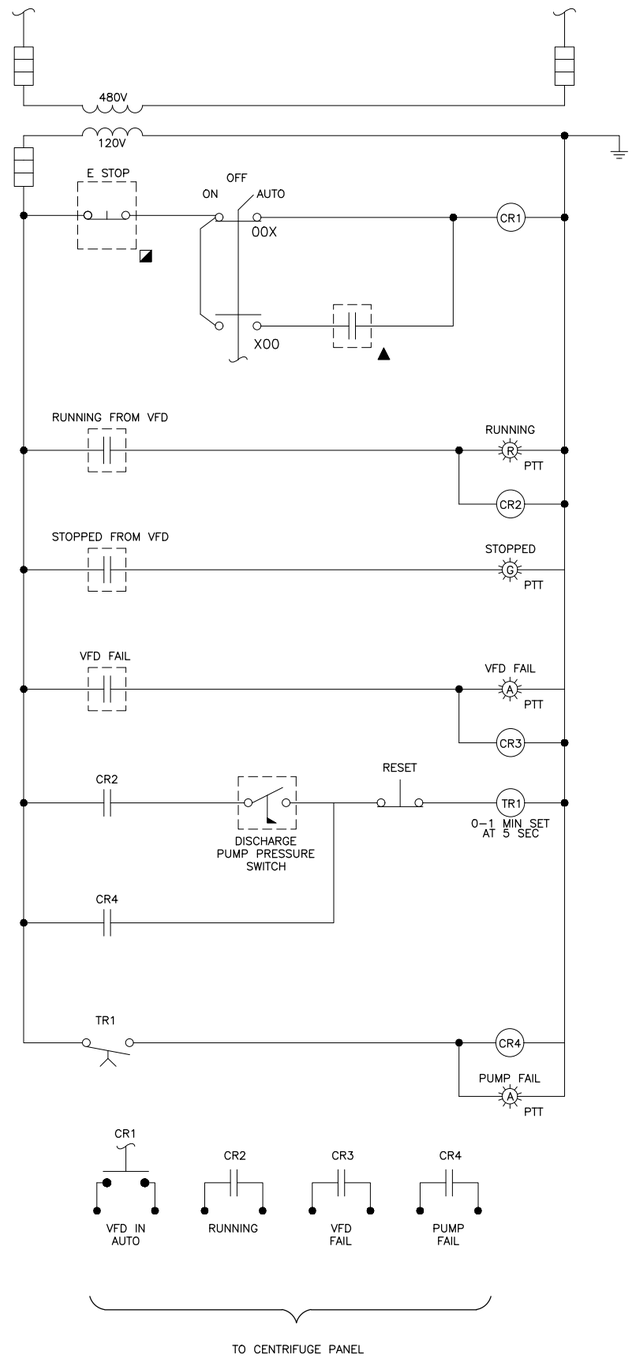

DISCHARGE PUMP

HB-TC-SLP-101
HB-TC-SLP-201

LEGEND

▲ FROM CENTRIFUGE PANEL.

◪ IN FIELD

CP&Y, INC.
TBPE FIRM REGISTRATION NO. F-1741

CITY OF AUSTIN

STATE OF TEXAS
GERALD P. ROBINSON, JR.
112423
LICENSED
PROFESSIONAL ENGINEER
08/27/2021

NO.	REVISION	BY	DATE

VERIFY SCALE 0 1"
BAR IS ONE INCH ON ORIGINAL DRAWING. IF NOT ONE INCH ON THIS SHEET, ADJUST SCALE

CITY OF AUSTIN – AUSTIN WATER
HORNSBY BEND BMP CENTRIFUGES

ELECTRICAL CONTROL LOGIC (SHEET 1 OF 2)

Date: MAY 2021
Designed: D. BARNES
Drawn: G.LEUENBERGER
Reviewed: G.ROBINSON, P.E.
CP&Y Proj. AUST1600646.01

SHEET
E-28

REFERENCES: AUST1600646.01 Border Base.dwg _Std ENVIRO SEALS
May 20, 2021 – 3:30pm C:\pwworking\cpy\pw_cpy\gleuenberger\d0795251\AUST1600646.01_7_E-28_CPY.dwg

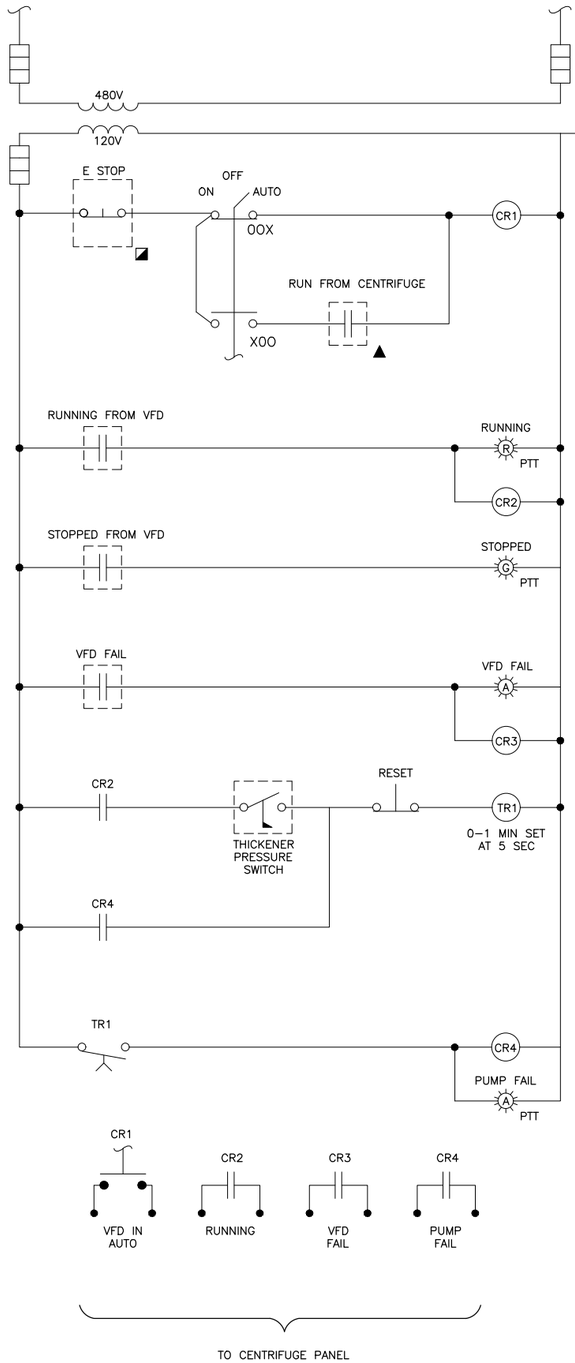

THICKENER FEED PUMP

HB–TC–SLP–100
HB–TC–SLP–200

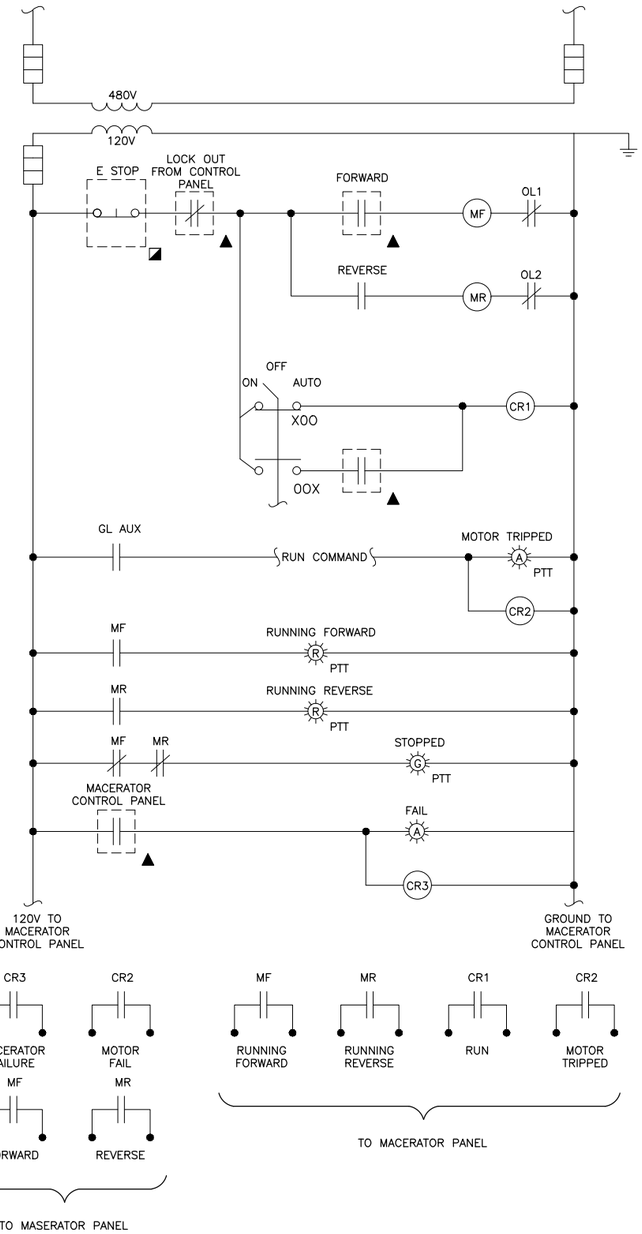

MACERATOR STARTER

HB–TC–MRT–100
HB–TC–MRT–200

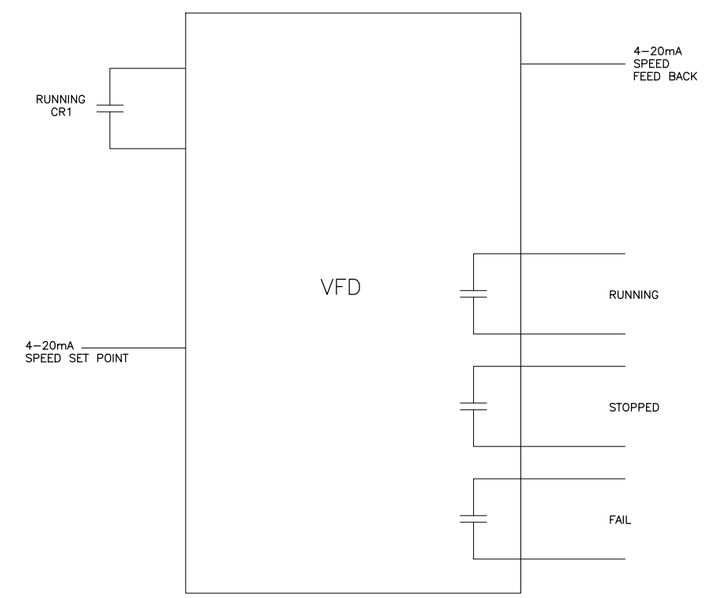

TYPICAL FOR ALL VFD

LEGEND

▲ FROM CENTRIFUGE PANEL.

◪ IN FIELD

REFERENCES: AUST1600646.01 Border Base.dwg _Std ENVIRO SEALS
Jun 03, 2021 – 4:35pm C:\pwworking\cpy\gw_cpy\gleuenberger\d0795251\AUST1600646.01_7_E-29_CPY.dwg

CP&Y, INC.
TBPE FIRM REGISTRATION NO. F-1741

CITY OF AUSTIN – AUSTIN WATER
HORNSBY BEND BMP CENTRIFUGES

ELECTRICAL CONTROL LOGIC
(SHEET 2 OF 2)

NO.	REVISION	BY	DATE

VERIFY SCALE 0 1"
BAR IS ONE INCH ON ORIGINAL DRAWING. IF NOT ONE INCH ON THIS SHEET, ADJUST SCALE

Date: MAY 2021
Designed: D. BARNES
Drawn: G.LEUENBERGER
Reviewed: G.ROBINSON, P.E.
CP&Y Proj. AUST1600646.01

SHEET
E–29

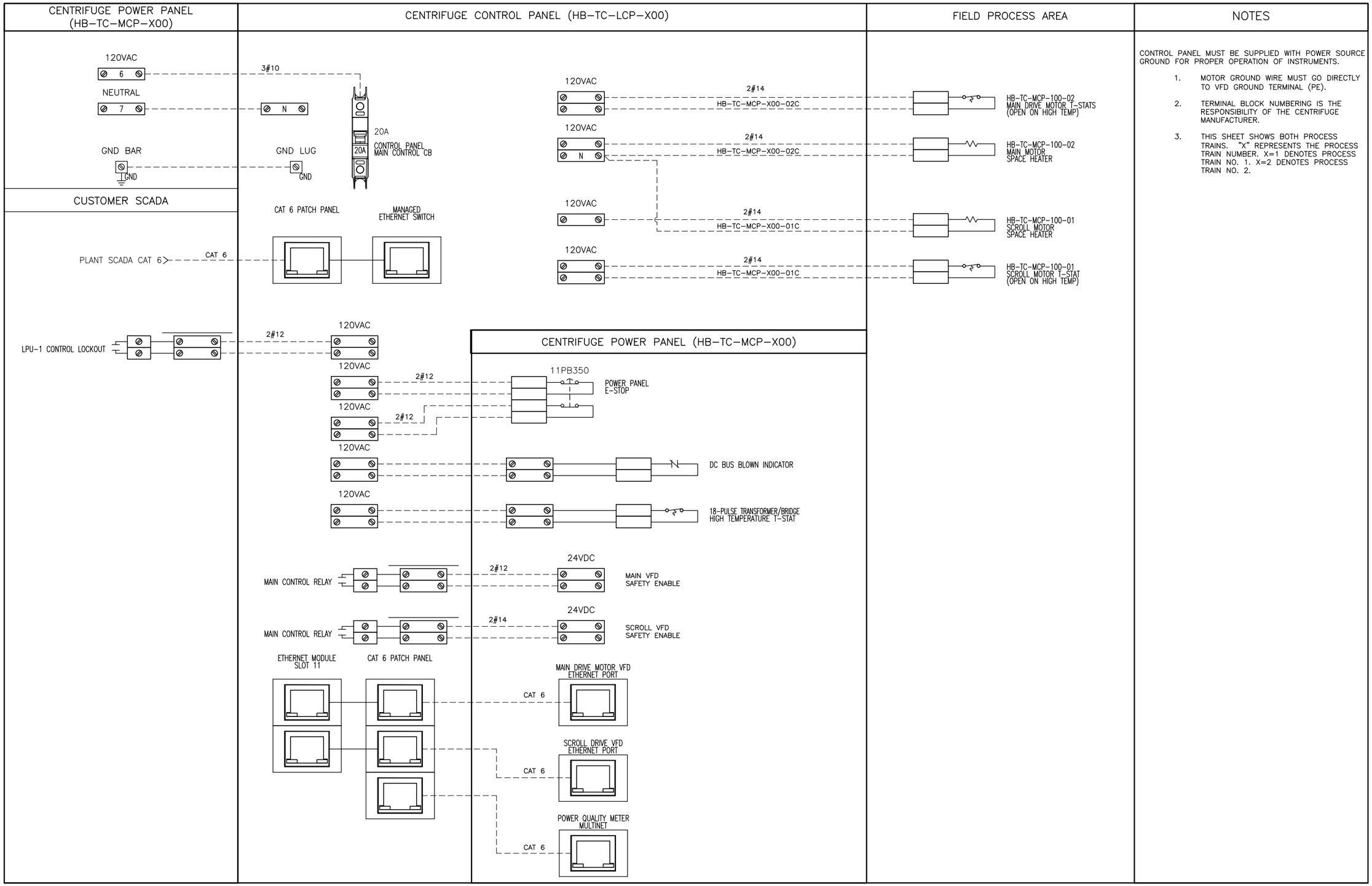

CONTROL PANEL MUST BE SUPPLIED WITH POWER SOURCE GROUND FOR PROPER OPERATION OF INSTRUMENTS.

1. MOTOR GROUND WIRE MUST GO DIRECTLY TO VFD GROUND TERMINAL (PE).
2. TERMINAL BLOCK NUMBERING IS THE RESPONSIBILITY OF THE CENTRIFUGE MANUFACTURER.
3. THIS SHEET SHOWS BOTH PROCESS TRAINS. "X" REPRESENTS THE PROCESS TRAIN NUMBER. X=1 DENOTES PROCESS TRAIN NO. 1. X=2 DENOTES PROCESS TRAIN NO. 2.

CP&Y, INC.
TBPE FIRM REGISTRATION NO. F-1741

CITY OF AUSTIN EST. 1839 PROMOTED

STATE OF TEXAS GERALD P. ROBINSON, JR. 112423 LICENSED PROFESSIONAL ENGINEER 08/27/2021

NO.	REVISION	BY	DATE

VERIFY SCALE 0 1" BAR IS ONE INCH ON ORIGINAL DRAWING. IF NOT ONE INCH ON THIS SHEET, ADJUST SCALE

CITY OF AUSTIN – AUSTIN WATER
HORNSBY BEND BMP CENTRIFUGES

INTERCONNECTION DIAGRAM (SHEET 1 OF 10)

Date: MAY 2021
Designed: D.BARNES
Drawn: G.LEUENBERGER
Reviewed: G.ROBINSON, P.E.
CP&Y Proj. AUST1600646.01

SHEET
E-30

REFERENCES: AUST1600646.01 Border Base.dwg _Std ENVIRO SEALS
May 20, 2021 – 3:36pm C:\pwworking\cpy\pw_cpy\gleuenberger\d0795251\AUST1600646.01_7_E-30_COPY.dwg

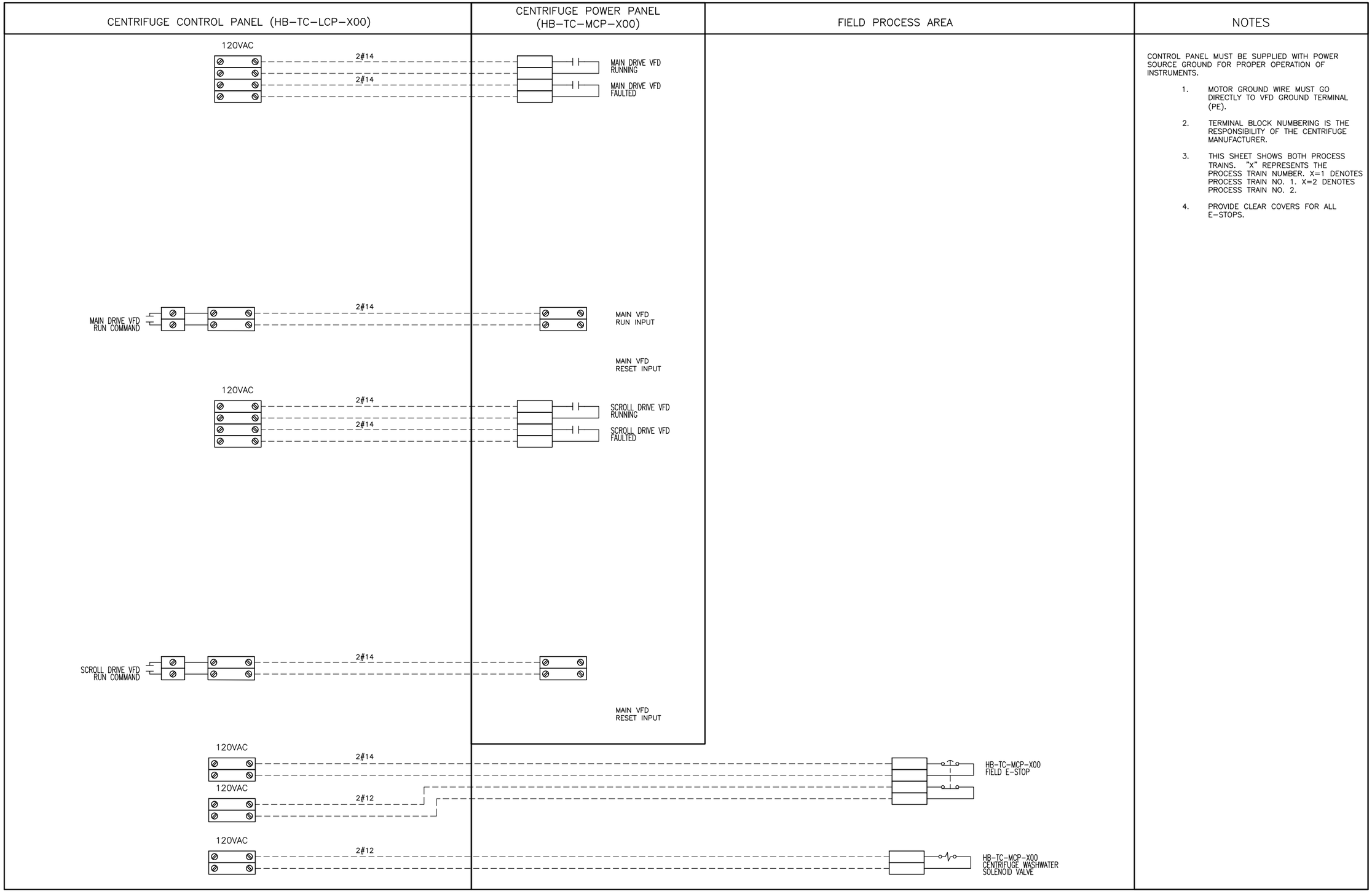

CONTROL PANEL MUST BE SUPPLIED WITH POWER SOURCE GROUND FOR PROPER OPERATION OF INSTRUMENTS.

1. MOTOR GROUND WIRE MUST GO DIRECTLY TO VFD GROUND TERMINAL (PE).
2. TERMINAL BLOCK NUMBERING IS THE RESPONSIBILITY OF THE CENTRIFUGE MANUFACTURER.
3. THIS SHEET SHOWS BOTH PROCESS TRAINS. "X" REPRESENTS THE PROCESS TRAIN NUMBER. X=1 DENOTES PROCESS TRAIN NO. 1. X=2 DENOTES PROCESS TRAIN NO. 2.
4. PROVIDE CLEAR COVERS FOR ALL E-STOPS.

CP&Y, INC.
TBPE FIRM REGISTRATION NO. F-1741

CITY OF AUSTIN ESTD. 1839 EMPOWERED

STATE OF TEXAS
GERALD P. ROBINSON, JR.
112423
LICENSED
PROFESSIONAL ENGINEER
08/27/2021

NO.	REVISION	BY	DATE

VERIFY SCALE 0 1"
BAR IS ONE INCH ON ORIGINAL DRAWING. IF NOT ONE INCH ON THIS SHEET, ADJUST SCALE

CITY OF AUSTIN – AUSTIN WATER
HORNSBY BEND BMP CENTRIFUGES

INTERCONNECTION DIAGRAM (SHEET 2 OF 10)

Date: MAY 2021
Designed: D. BARNES
Drawn: G.LEUENBERGER
Reviewed: G.ROBINSON, P.E.
CP&Y Proj. AUST1600646.01

SHEET
E-31

REFERENCES: AUST1600646.01 Border Base.dwg _Std ENVIRO SEALS
May 20, 2021 – 3:39pm C:\pwworking\cpy\pw_cpy\gleuenberger\d0795251\AUST1600646.01_7_E-31_CPY.dwg

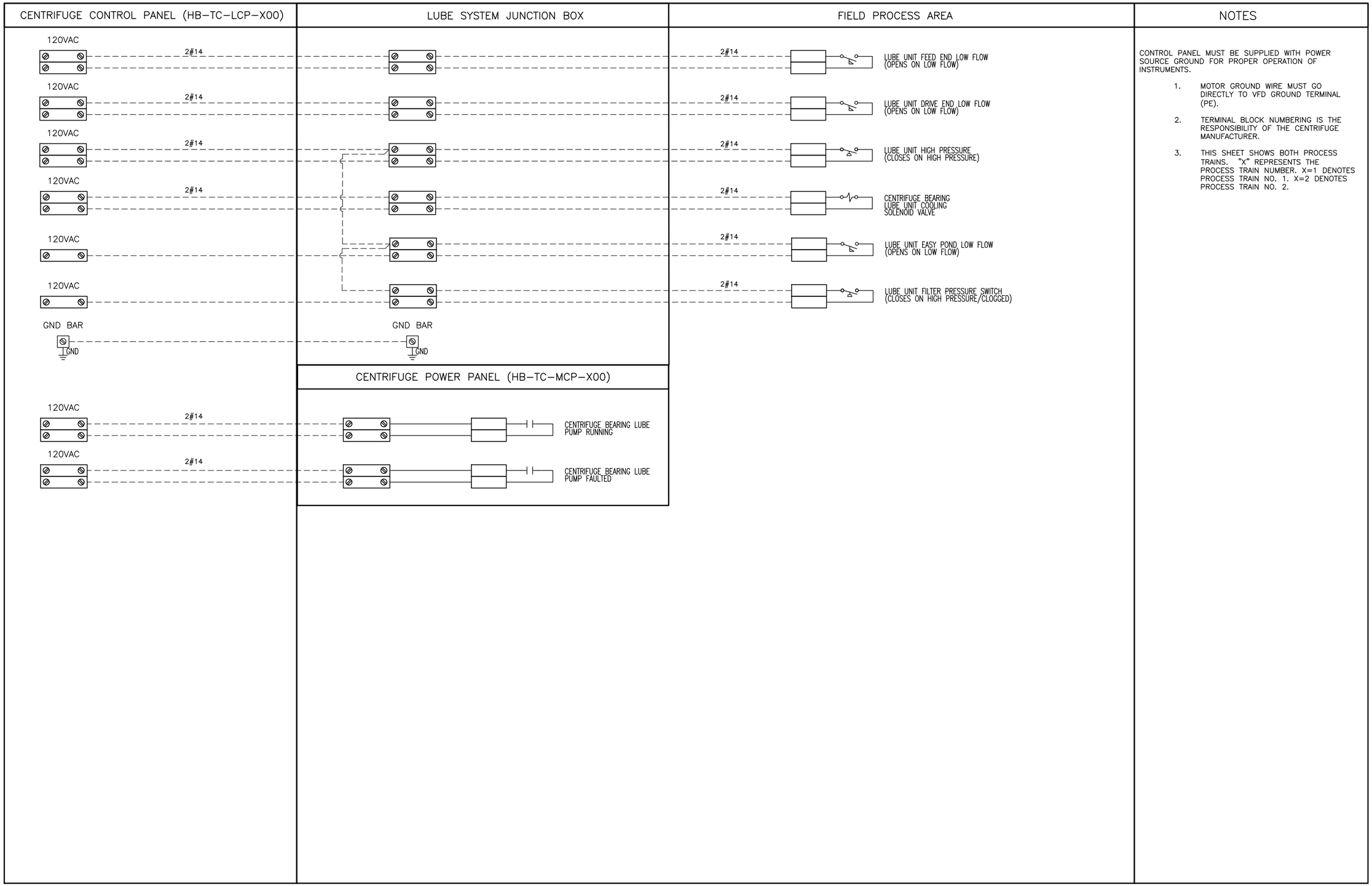

NOTES

CONTROL PANEL MUST BE SUPPLIED WITH POWER SOURCE GROUND FOR PROPER OPERATION OF INSTRUMENTS.

1. MOTOR GROUND WIRE MUST GO DIRECTLY TO VFD GROUND TERMINAL (PE).
2. TERMINAL BLOCK NUMBERING IS THE RESPONSIBILITY OF THE CENTRIFUGE MANUFACTURER.
3. THIS SHEET SHOWS BOTH PROCESS TRAINS. "X" REPRESENTS THE PROCESS TRAIN NUMBER. X=1 DENOTES PROCESS TRAIN NO. 1. X=2 DENOTES PROCESS TRAIN NO. 2.

CP&Y, INC.
TBPE FIRM REGISTRATION NO. F-1741

CITY OF AUSTIN EST. 1839 FOUNDED

STATE OF TEXAS
GERALD P. ROBINSON, JR.
112423
LICENSED
PROFESSIONAL ENGINEER
08/27/2021

NO.	REVISION	BY	DATE

VERIFY SCALE 0 1" BAR IS ONE INCH ON ORIGINAL DRAWING. IF NOT ONE INCH ON THIS SHEET, ADJUST SCALE

CITY OF AUSTIN – AUSTIN WATER
HORNSBY BEND BMP CENTRIFUGES

INTERCONNECTION DIAGRAM (SHEET 3 OF 10)

Date: MAY 2021
Designed: D. BARNES
Drawn: G.LEUENBERGER
Reviewed: G.ROBINSON, P.E.
CP&Y Proj AUST1600646.01

SHEET
E-32

REFERENCES: AUST1600646.01 Border Base.dwg _Std ENVIRO SEALS
May 20, 2021 – 3:41pm C:\pwworking\cpy\pw_cpy\gleuenberger\d0795251\AUST1600646.01_7_E-32_CPY.dwg

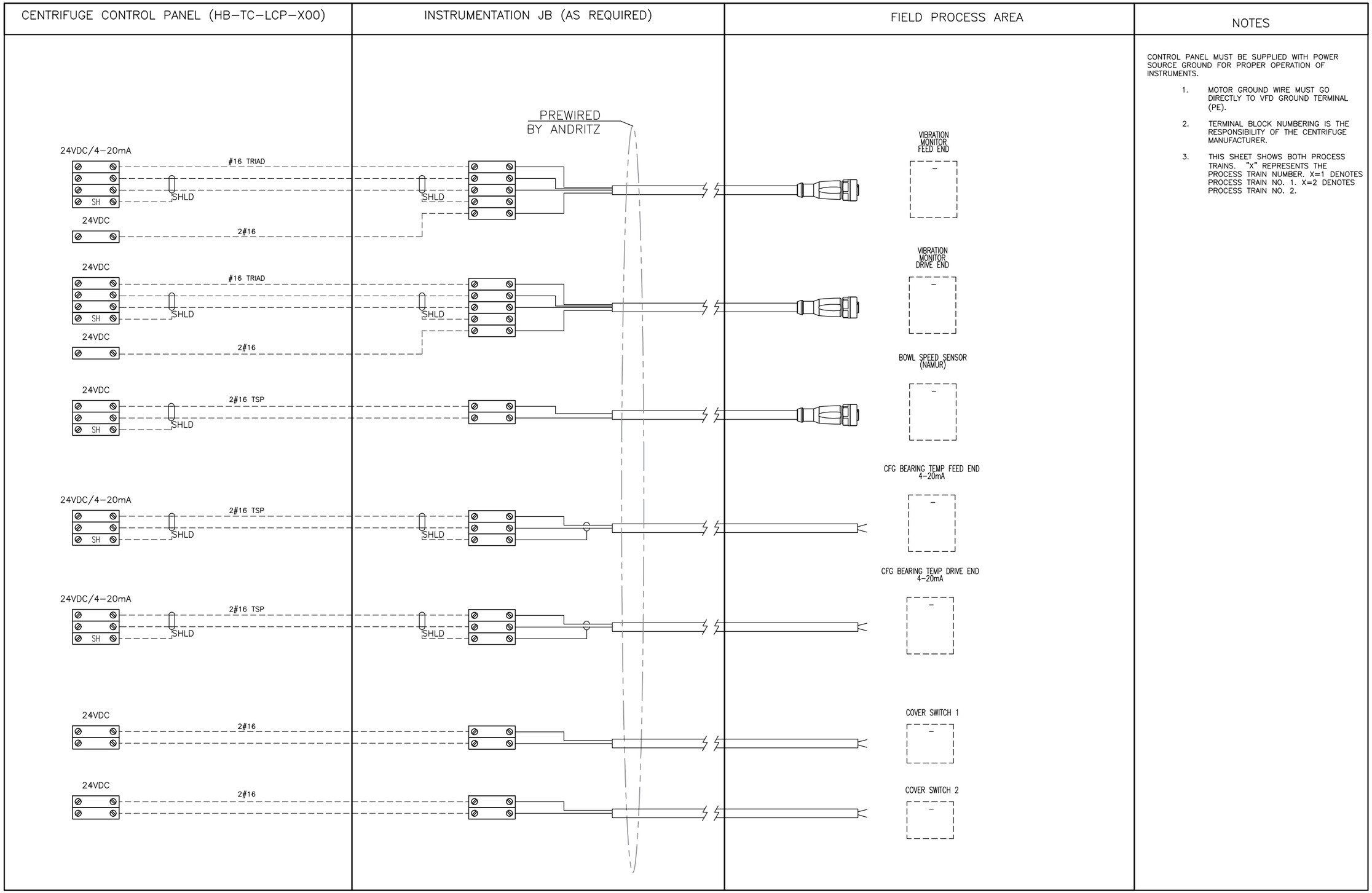

NOTES

CONTROL PANEL MUST BE SUPPLIED WITH POWER SOURCE GROUND FOR PROPER OPERATION OF INSTRUMENTS.

1. MOTOR GROUND WIRE MUST GO DIRECTLY TO VFD GROUND TERMINAL (PE).
2. TERMINAL BLOCK NUMBERING IS THE RESPONSIBILITY OF THE CENTRIFUGE MANUFACTURER.
3. THIS SHEET SHOWS BOTH PROCESS TRAINS. "X" REPRESENTS THE PROCESS TRAIN NUMBER. X=1 DENOTES PROCESS TRAIN NO. 1. X=2 DENOTES PROCESS TRAIN NO. 2.

CP&Y, INC.
TBPE FIRM REGISTRATION NO. F-1741

STATE OF TEXAS
GERALD P. ROBINSON, JR.
112423
LICENSED
PROFESSIONAL ENGINEER
08/27/2021

NO.	REVISION	BY	DATE

VERIFY SCALE 0 1"
BAR IS ONE INCH ON ORIGINAL DRAWING. IF NOT ONE INCH ON THIS SHEET, ADJUST SCALE

CITY OF AUSTIN – AUSTIN WATER
HORNSBY BEND BMP CENTRIFUGES

INTERCONNECTION DIAGRAM (SHEET 4 OF 10)

Date: MAY 2021
Designed: D. BARNES
Drawn: G.LEUENBERGER
Reviewed: G.ROBINSON, P.E.
CP&Y Proj. AUST1600646.01

SHEET
E-33

REFERENCES: AUST1600646.01 Border Base.dwg _Std ENVIRO SEALS
May 20, 2021 – 3:43pm C:\pwworking\cpy\gw_cpy\gleuenberger\d0795251\AUST1600646.01_7_E-33_CPY.dwg

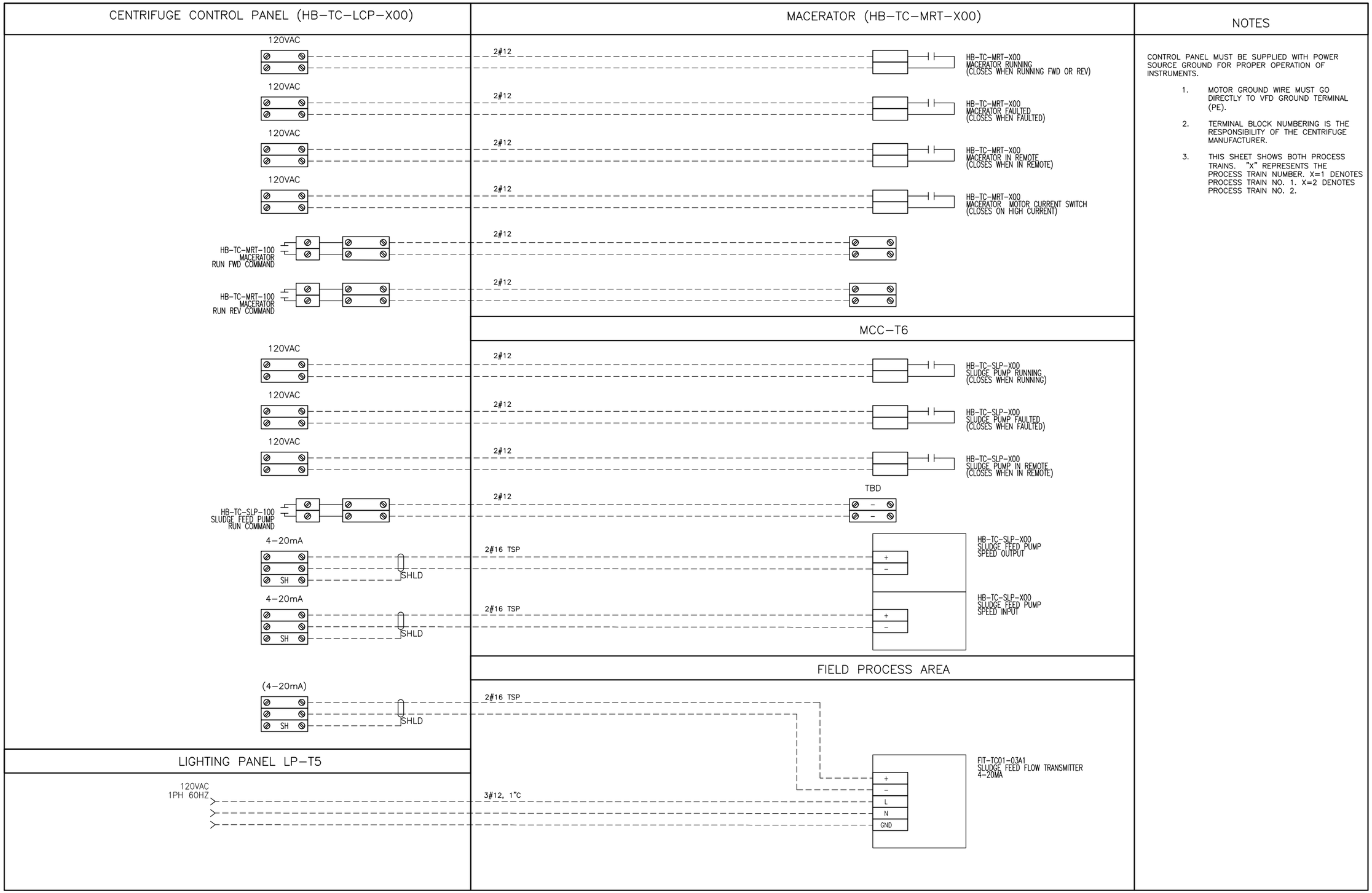

NOTES

CONTROL PANEL MUST BE SUPPLIED WITH POWER SOURCE GROUND FOR PROPER OPERATION OF INSTRUMENTS.

1. MOTOR GROUND WIRE MUST GO DIRECTLY TO VFD GROUND TERMINAL (PE).
2. TERMINAL BLOCK NUMBERING IS THE RESPONSIBILITY OF THE CENTRIFUGE MANUFACTURER.
3. THIS SHEET SHOWS BOTH PROCESS TRAINS. "X" REPRESENTS THE PROCESS TRAIN NUMBER. X=1 DENOTES PROCESS TRAIN NO. 1. X=2 DENOTES PROCESS TRAIN NO. 2.

CP&Y, INC.
TBPE FIRM REGISTRATION NO. F-1741

CITY OF AUSTIN EST. 1839 PROMOTED

STATE OF TEXAS GERALD P. ROBINSON, JR. 112423 LICENSED PROFESSIONAL ENGINEER 08/27/2021

NO.	REVISION	BY	DATE

VERIFY SCALE 0 1" BAR IS ONE INCH ON ORIGINAL DRAWING. IF NOT ONE INCH ON THIS SHEET, ADJUST SCALE

CITY OF AUSTIN – AUSTIN WATER
HORNSBY BEND BMP CENTRIFUGES

INTERCONNECTION DIAGRAM
(SHEET 5 OF 10)

Date: MAY 2021
Designed: D. BARNES
Drawn: G.LEUENBERGER
Reviewed: G.ROBINSON, P.E.
CP&Y Proj. AUST1600646.01

SHEET
E-34

REFERENCES: AUST1600646.01 Border Base.dwg _-Std ENVIRO SEALS
May 20, 2021 – 3:45pm C:\pwworking\cpy\pw_cpy\gleuenberger\d0795251\AUST1600646.01_7_E-34_CPY.dwg

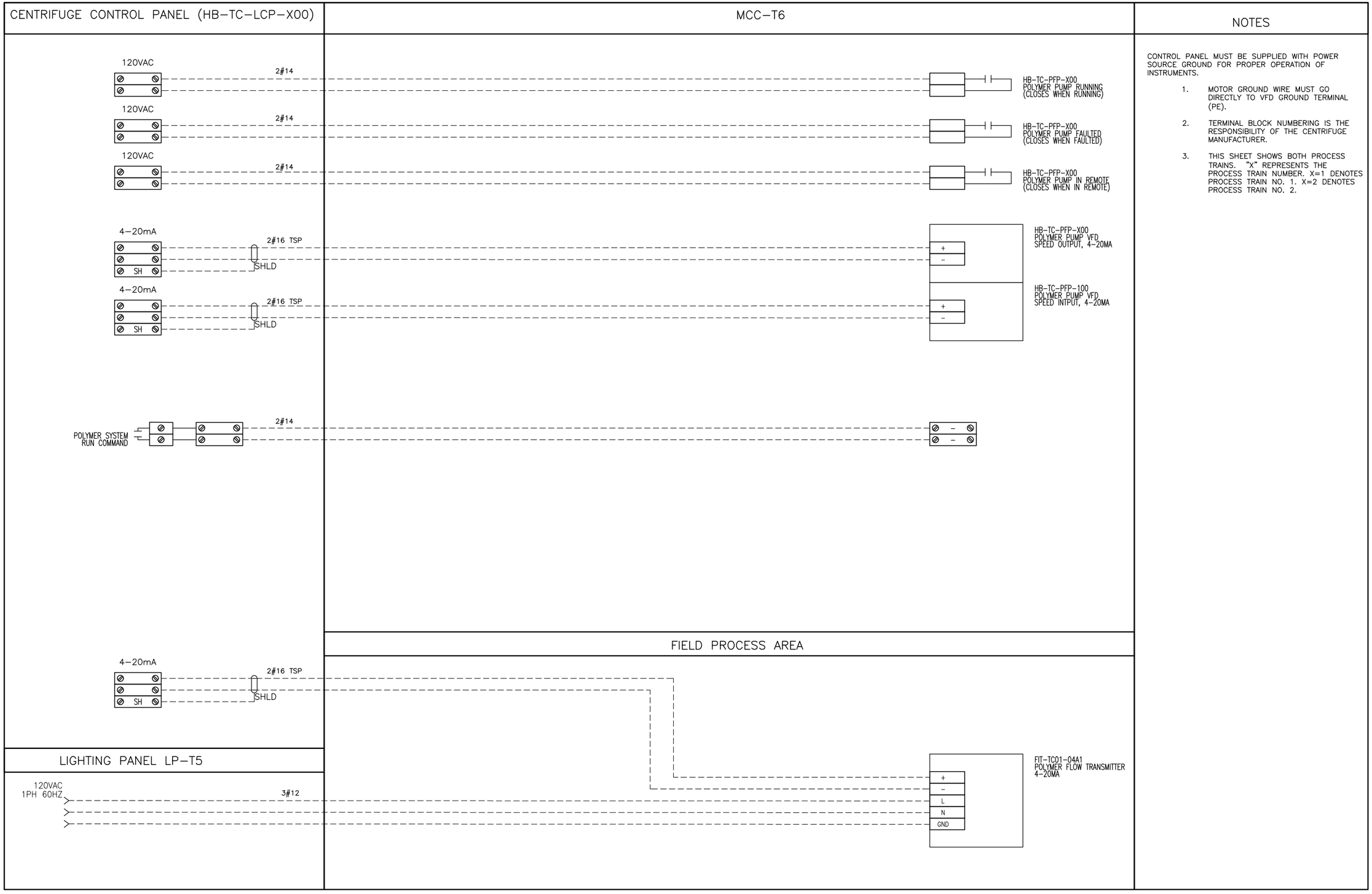

NOTES

CONTROL PANEL MUST BE SUPPLIED WITH POWER SOURCE GROUND FOR PROPER OPERATION OF INSTRUMENTS.

1. MOTOR GROUND WIRE MUST GO DIRECTLY TO VFD GROUND TERMINAL (PE).
2. TERMINAL BLOCK NUMBERING IS THE RESPONSIBILITY OF THE CENTRIFUGE MANUFACTURER.
3. THIS SHEET SHOWS BOTH PROCESS TRAINS. "X" REPRESENTS THE PROCESS TRAIN NUMBER. X=1 DENOTES PROCESS TRAIN NO. 1. X=2 DENOTES PROCESS TRAIN NO. 2.

CP&Y, INC.
TBPE FIRM REGISTRATION NO. F-1741

CITY OF AUSTIN EST. 1839 PROVIDED

STATE OF TEXAS
GERALD P. ROBINSON, JR.
112423
LICENSED
PROFESSIONAL ENGINEER
08/27/2021

NO.	REVISION	BY	DATE

VERIFY SCALE 0 1"
BAR IS ONE INCH ON ORIGINAL DRAWING. IF NOT ONE INCH ON THIS SHEET, ADJUST SCALE

CITY OF AUSTIN – AUSTIN WATER
HORNSBY BEND BMP CENTRIFUGES

INTERCONNECTION DIAGRAM (SHEET 6 OF 10)

Date: MAY 2021
Designed: D. BARNES
Drawn: G.LEUENBERGER
Reviewed: G.ROBINSON, P.E.
CP&Y Proj. AUST1600646.01

SHEET
E-35

REFERENCES: AUST1600646.01 Border Base.dwg _Std ENVIRO SEALS
May 20, 2021 – 3:47pm C:\pwworking\cpy\pw_cpy\gleuenberger\d0795251\AUST1600646.01_7_E-35_CPY.dwg

CENTRIFUGE POWER PANEL (HB–TC–MCP–X00)

FIELD PROCESS AREA EASY POND CONTROL PANEL (HB–TC–EPC–X00)

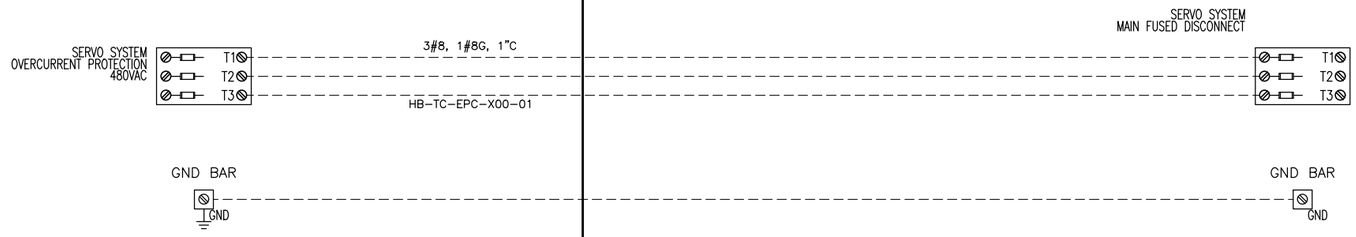

CENTRIFUGE CONTROL PANEL (HB–TC–LCP–X00)

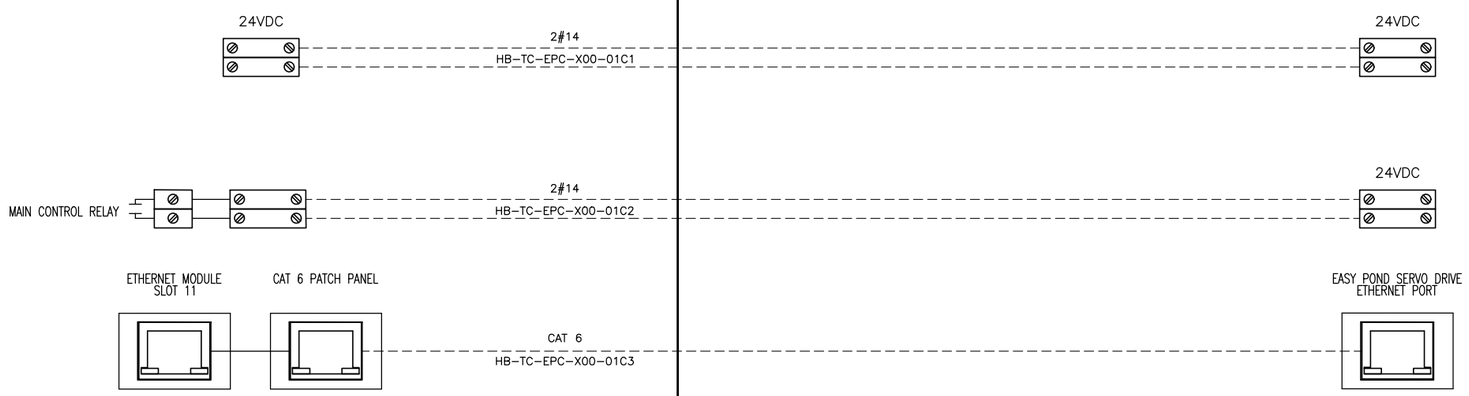

NOTES

CONTROL PANEL MUST BE SUPPLIED WITH POWER SOURCE GROUND FOR PROPER OPERATION OF INSTRUMENTS.

1. MOTOR GROUND WIRE MUST GO DIRECTLY TO VFD GROUND TERMINAL (PE).
2. TERMINAL BLOCK NUMBERING IS THE RESPONSIBILITY OF THE CENTRIFUGE MANUFACTURER.
3. THIS SHEET SHOWS BOTH PROCESS TRAINS. "X" REPRESENTS THE PROCESS TRAIN NUMBER. X=1 DENOTES PROCESS TRAIN NO. 1. X=2 DENOTES PROCESS TRAIN NO. 2.

CP&Y, INC.
TBPE FIRM REGISTRATION NO. F-1741

STATE OF TEXAS — GERALD P. ROBINSON, JR. — 112423 — LICENSED PROFESSIONAL ENGINEER — 08/27/2021

NO.	REVISION	BY	DATE

VERIFY SCALE 0 1"
BAR IS ONE INCH ON ORIGINAL DRAWING. IF NOT ONE INCH ON THIS SHEET, ADJUST SCALE

CITY OF AUSTIN – AUSTIN WATER
HORNSBY BEND BMP CENTRIFUGES

INTERCONNECTION DIAGRAM (SHEET 7 OF 10)

Date: MAY 2021
Designed: D. BARNES
Drawn: G.LEUENBERGER
Reviewed: G.ROBINSON, P.E.
CP&Y Proj AUST1600646.01

SHEET
E–36

REFERENCES: AUST1600646.01 Border Base.dwg –Std ENVIRO SEALS
May 20, 2021 – 3:48pm C:\pwworking\cpy\pw_cpy\gleuenberger\d0795251\AUST1600646.01_7_E-36_CPY.dwg

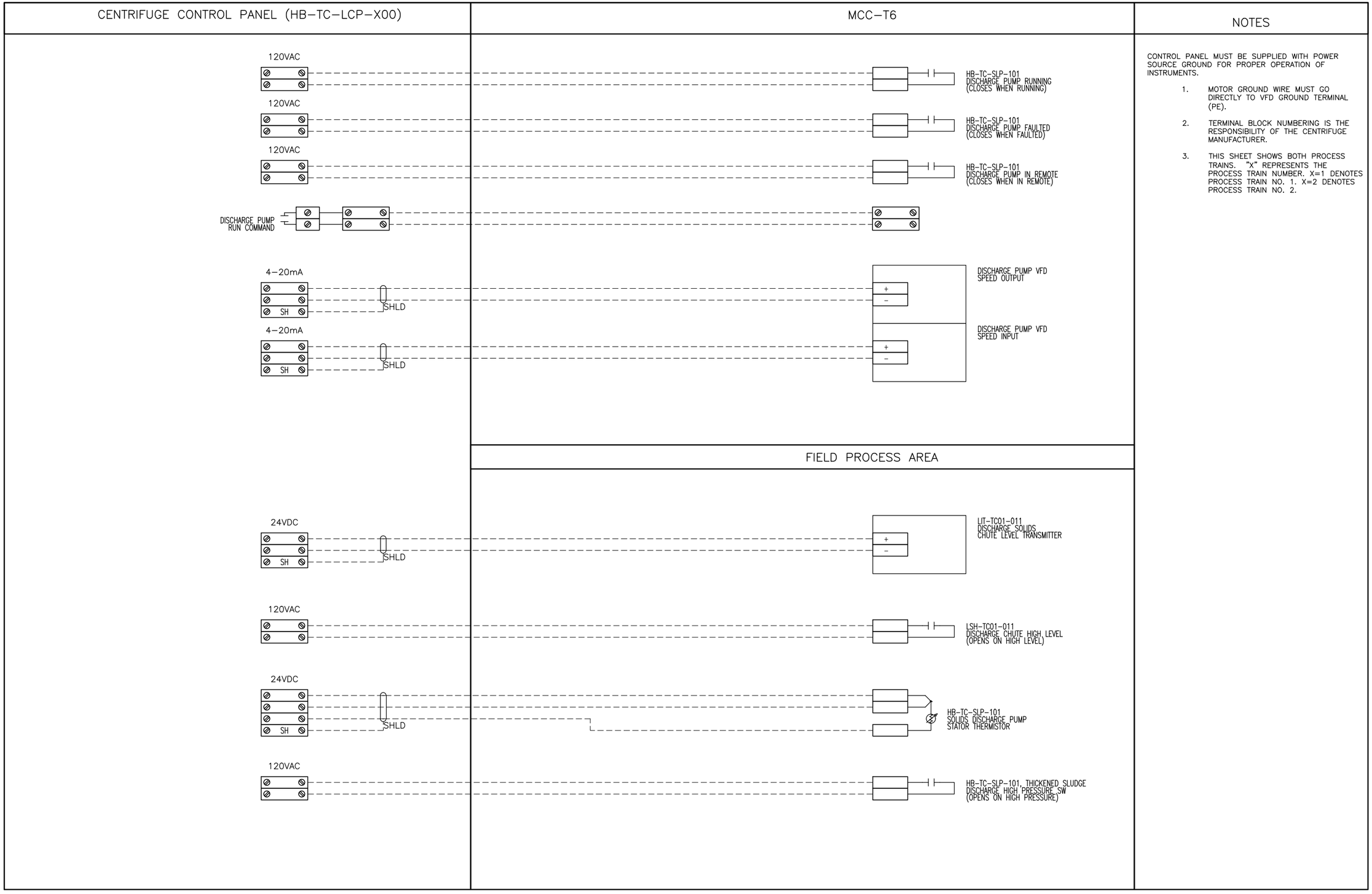

CONTROL PANEL MUST BE SUPPLIED WITH POWER SOURCE GROUND FOR PROPER OPERATION OF INSTRUMENTS.

1. MOTOR GROUND WIRE MUST GO DIRECTLY TO VFD GROUND TERMINAL (PE).
2. TERMINAL BLOCK NUMBERING IS THE RESPONSIBILITY OF THE CENTRIFUGE MANUFACTURER.
3. THIS SHEET SHOWS BOTH PROCESS TRAINS. "X" REPRESENTS THE PROCESS TRAIN NUMBER. X=1 DENOTES PROCESS TRAIN NO. 1. X=2 DENOTES PROCESS TRAIN NO. 2.

CP&Y, INC.
TBPE FIRM REGISTRATION NO. F-1741

CITY OF AUSTIN EST. 1839 EMPOWERED

STATE OF TEXAS
GERALD P. ROBINSON, JR.
112423
LICENSED
PROFESSIONAL ENGINEER
08/27/2021

NO.	REVISION	BY	DATE

VERIFY SCALE 0 1"
BAR IS ONE INCH ON ORIGINAL DRAWING. IF NOT ONE INCH ON THIS SHEET, ADJUST SCALE

CITY OF AUSTIN – AUSTIN WATER
HORNSBY BEND BMP CENTRIFUGES

INTERCONNECTION DIAGRAM (SHEET 8 OF 10)

Date: MAY 2021
Designed: D. BARNES
Drawn: G.LEUENBERGER
Reviewed: G.ROBINSON, P.E.
CP&Y Proj. AUST1600646.01

SHEET
E-37

REFERENCES: AUST1600646.01 Border Base.dwg _Std ENVIRO SEALS
May 20, 2021 – 3:50pm C:\pwworking\cpy\pw_cpy\gleuenberger\d0795251\AUST1600646.01_7_E-37_CPY.dwg

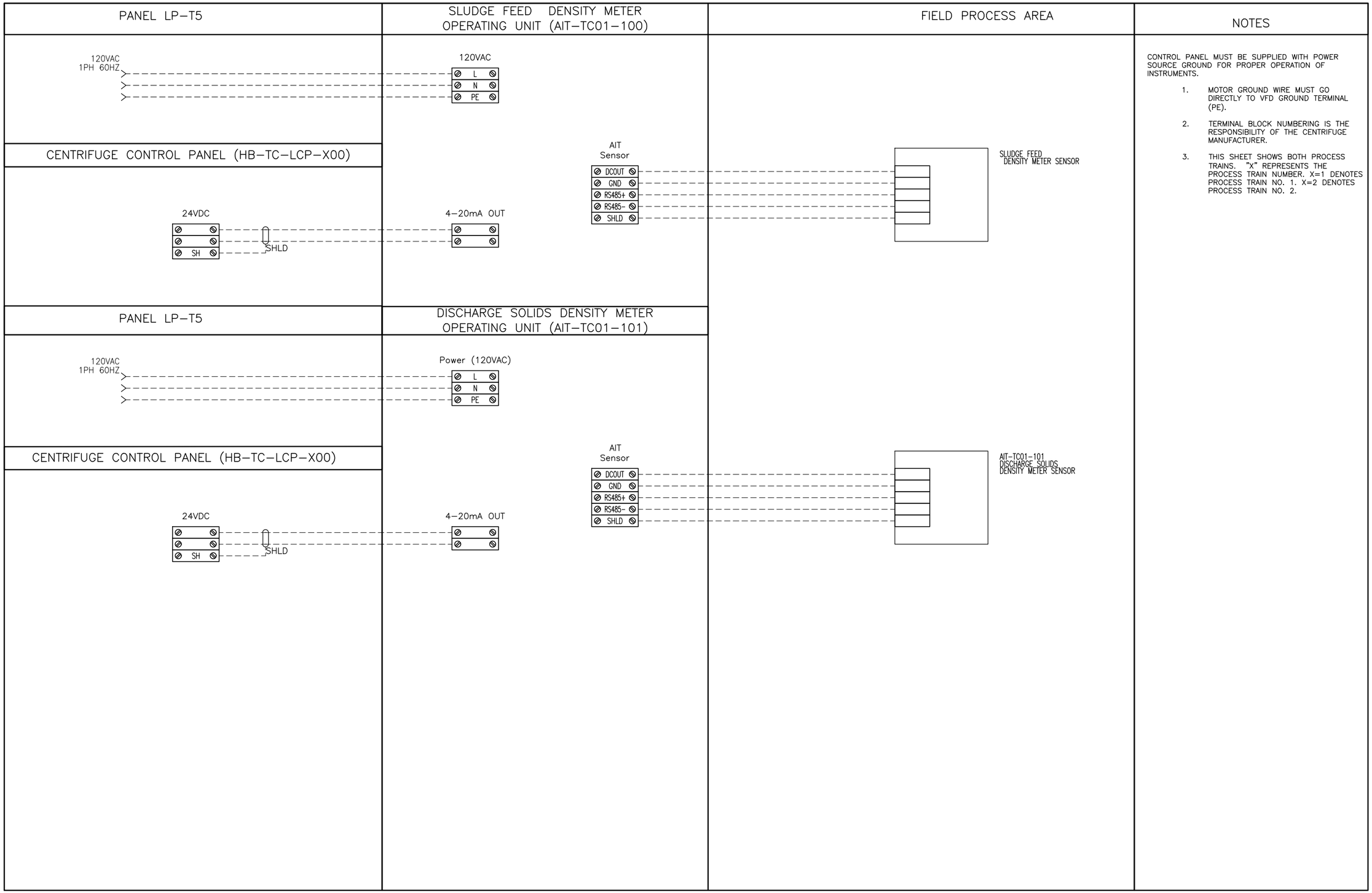

NOTES

CONTROL PANEL MUST BE SUPPLIED WITH POWER SOURCE GROUND FOR PROPER OPERATION OF INSTRUMENTS.

1. MOTOR GROUND WIRE MUST GO DIRECTLY TO VFD GROUND TERMINAL (PE).
2. TERMINAL BLOCK NUMBERING IS THE RESPONSIBILITY OF THE CENTRIFUGE MANUFACTURER.
3. THIS SHEET SHOWS BOTH PROCESS TRAINS. "X" REPRESENTS THE PROCESS TRAIN NUMBER. X=1 DENOTES PROCESS TRAIN NO. 1. X=2 DENOTES PROCESS TRAIN NO. 2.

CP&Y, INC.
TBPE FIRM REGISTRATION NO. F-1741

CITY OF AUSTIN EST. 1839 EMPOWERED

STATE OF TEXAS
GERALD P. ROBINSON, JR.
112423
LICENSED
PROFESSIONAL ENGINEER
08/27/2021

NO.	REVISION	BY	DATE

VERIFY SCALE 0 1"
BAR IS ONE INCH ON ORIGINAL DRAWING. IF NOT ONE INCH ON THIS SHEET, ADJUST SCALE

CITY OF AUSTIN – AUSTIN WATER
HORNSBY BEND BMP CENTRIFUGES

INTERCONNECTION DIAGRAM (SHEET 9 OF 10)

Date: MAY 2021
Designed: D. BARNES
Drawn: G.LEUENBERGER
Reviewed: G.ROBINSON, P.E.
CP&Y Proj: AUST1600646.01

SHEET
E-38

REFERENCES: AUST1600646.01 Border Base.dwg _Std ENVIRO SEALS
May 20, 2021 – 3:52pm C:\pwworking\cpy\pw_cpy\gleuenberger\d0795251\AUST1600646.01_7_E-38_CPY.dwg

CENTRIFUGE CONTROL PANEL (HB–TC–LCP–X00)

LOCAL OPERATOR PANEL (HB–TC–LOP–X00)

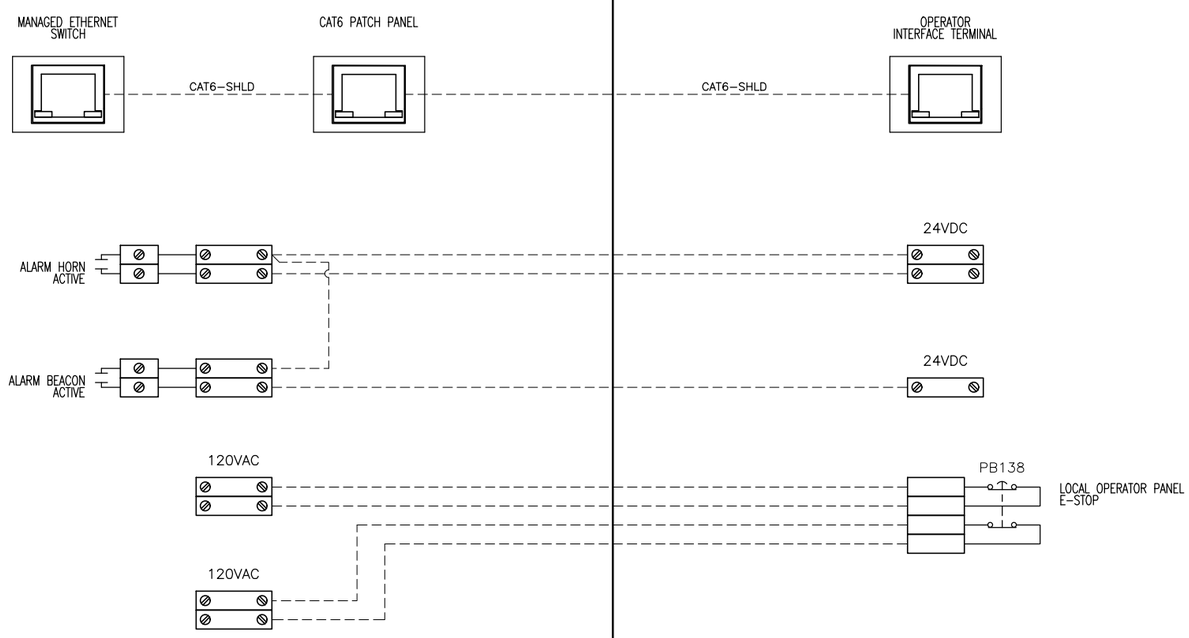

NOTES

CONTROL PANEL MUST BE SUPPLIED WITH POWER SOURCE GROUND FOR PROPER OPERATION OF INSTRUMENTS.

1. THIS POINT TO POINT DRAWING IS DERIVED FROM PROJECT SCHEMATICS. REFER TO PROJECT SCHEMATICS FOR FURTHER CLARIFICATION.
2. THIS SHEET SHOWS BOTH PROCESS TRAINS. "X" REPRESENTS THE PROCESS TRAIN NUMBER. X=1 DENOTES PROCESS TRAIN NO. 1. X=2 DENOTES PROCESS TRAIN NO. 2.
3. PROVIDE CLEAR COVERS FOR ALL E–STOPS.

CP&Y, INC.
TBPE FIRM REGISTRATION NO. F–1741

STATE OF TEXAS — GERALD P. ROBINSON, JR. — 112423 — LICENSED PROFESSIONAL ENGINEER — 08/27/2021

NO.	REVISION	BY	DATE

VERIFY SCALE 0 1"
BAR IS ONE INCH ON ORIGINAL DRAWING. IF NOT ONE INCH ON THIS SHEET, ADJUST SCALE

CITY OF AUSTIN – AUSTIN WATER
HORNSBY BEND BMP CENTRIFUGES

INTERCONNECTION DIAGRAM (SHEET 10 OF 10)

Date: MAY 2021
Designed: D.BARNES
Drawn: G.LEUENBERGER
Reviewed: G.ROBINSON, P.E.
CP&Y Proj. AUST1600646.01

SHEET
E–39

REFERENCES: AUST1600646.01 Border Base.dwg _Std ENVIRO SEALS
May 20, 2021 – 3:53pm C:\pwworking\cpy\pw_cpy\gleuenberger\d0795251\AUST1600646.01_7_E–39_CPY.dwg

EXISTING PANEL MSPP — LOCATION: EAST THICKENER WALL
SERVICE VOLTAGE: 277/480 — MOUNTING: SURFACE
A.I.C — MAIN BREAKER 225 AMPS, 3PH, 4W & G

DESCRIPTION	BREAKER POLE	BREAKER AMP	"CKT NO"	"BUS CONN"	"CKT NO"	BREAKER POLE	BREAKER AMP	DESCRIPTION
CRANE	3	20	1		2	3	20	ERH-2
			3		4			
			5		6			
ERH-1	3	20	7		8	3	20	ERH-4
			9		10			
			11		12			
ERH-5	3	20	13		14	3	20	ERH-6
			15		16			
			17		18			
ERH-7	3	20	19		20	3	20	ERH-8
			21		22			
			23		24			
ERH-3	3	20	25		26	3	20	SPACE
			27		28			
			29		30			
SF-4	3	20	25		26	3	20	SF-5
			27		28			
			29		30			
RF-14	3	20	25		26	3	20	PPU-2
			27		28			
			29		30			

EXISTING PANEL MSPP

EXISTING PANEL H1 — LOCATION: THICKENER COMPLEX
SERVICE VOLTAGE: 277/480 VOLTS — MOUNTING: WALL MOUNT
A.I.C — MAIN BREAKER 225A , 3PH, 4W & G

DESCRIPTION	BREAKER POLE	BREAKER AMP	"CKT NO"	"BUS CONN"	"CKT NO"	BREAKER POLE	BREAKER AMP	DESCRIPTION
T-1 XFMR	3	50	1		2	3	20	RF-1
–	–	–	3		4	–	–	–
–	–	–	5		6	–	–	–
ERH-22	1	20	7		8	1	20	ERH-19
ERH-21	1	20	9		10	1	20	ERH-29
ERH-20	1	20	11		12	1	20	ERH-30
ERH-31	1	20	13		14	1	20	ERH-28
ERH-32	1	20	15		16	1	20	ERH-33
ERH-17	1	20	17		18	1	20	ERH-34
ERH-35	1	20	19		20	1	20	ERH-13
ERH-36	1	20	21		22	1	20	ERH-14
ERH-27	1	20	23		24	1	20	ERH-15
RF-2	3	20	25		26	1	20	ERH-16
–	–	–	27		28	3	20	RF-5
–	–	–	29		30	–	–	–
RF-3	3	20	31		32	–	–	–
–	–	–	33		34	3	20	RF-6
–	–	–	35		36	–	–	–
RF-4	3	20	37		38	–	–	–
–	–	–	39		40	–	–	–
–	–	–	41		42	–	–	–

EXISTING PANEL H1

EXISTING PANEL H2 — LOCATION: THICKENER COMPLEX
SERVICE VOLTAGE: 277/480 VOLTS — MOUNTING: SURFACE
A.I.C — MAIN BREAKER 225A, 3PH, 4W & G

DESCRIPTION	BREAKER POLE	BREAKER AMP	"CKT NO"	"BUS CONN"	"CKT NO"	BREAKER POLE	BREAKER AMP	DESCRIPTION
			1		2	1	20	
ERH-9	1	20	3		4	1	20	ERH-11
ERH-10	1	20	5		6	1	20	ERH-12
ERH-26	1	20	7		8	1	20	ERH-39
ERH-37	1	20	9		10	1	20	ERH-40
ERH-38	1	20	11		12	1	20	ERH-25
ERH-13	1	20	13		14	1	20	ERH-43
ERH-41	1	20	15		16	1	20	ERH-44
			17		18	1	20	ERH-23
ERH-45			19		20	3	20	RF-9
ERH-46			21		22	–	–	–
ERH-47			23		24	–	–	–
RF-7	3	20	25		26	3	20	RF-10
–	–	–	27		28	–	–	–
–	–	–	29		30	–	–	–
RF-8	3	20	31		32	3	20	RF-11
–	–	–	33		34	–	–	–
–	–	–	35		36	–	–	–
RF-12	3	20	37		38	3	20	RF-13
–	–	–	39		40	–	–	–
–	–	–	41		42	–	–	–

EXISTING PANEL H2

EXISTING PANEL L1R — LOCATION: OUTSIDE SOUTH WALL OF STORAGE ROOM
SERVICE VOLTAGE: 120/208V — MOUNTING: SURFACE
A.I.C 10,000 — MAIN BREAKER 125A AMPS 3P 4W

DESCRIPTION	BREAKER POLE	BREAKER AMP	"CKT NO"	"BUS CONN"	"CKT NO"	BREAKER POLE	BREAKER AMP	DESCRIPTION
RECPT	1	20	1		2	3	XX	SPARE
RECPT	1	20	3		4	–	–	–
(1) SOLID SAMPLING CBT1	1	20	5		6	–	–	–
SOLID SAMPLING CBT2	1	20	7		8	2	20	SPARE
SPARE	1	20	9		10	–	–	–
SPARE	1	20	11		12	2	20	SPARE
RECPT BATHROOM	1	20	13		14	–	–	–
SPARE	1	20	15		16	1	20	RECPT
RECPT	1	20	17		18	1	20	RECPT
RECPT	1	20	19		20	1	20	RECPT
SPARE	1	20	21		22	1	20	RECPT
–	1	20	23		24	1	20	OVERHEAD DOOR
RECPT	1	20	25		26	–	–	
SPARE	2	20	27		28	–	–	
–	–	–	29		30	–	–	SPACE

EXISTING PANEL L1R

NOTES BY SYMBOL (X)

1. DEMOLISH CONDUCTORS TO SOLIDS CONCENTRATION FILTER SAMPLING. MARK BREAKER AS SPARE.

CP&Y, INC.
TBPE FIRM REGISTRATION NO. #F-1741

STATE OF TEXAS — GERALD P. ROBINSON, JR. — 112423 — LICENSED PROFESSIONAL ENGINEER — 08/27/2021

NO.	REVISION	BY	DATE

VERIFY SCALE 0 1"
BAR IS ONE INCH ON ORIGINAL DRAWING. IF NOT ONE INCH ON THIS SHEET, ADJUST SCALE

CITY OF AUSTIN – AUSTIN WATER
HORNSBY BEND BMP CENTRIFUGES

PANEL SCHEDULE – FIXTURE SCHEDULE (SHEET 1 OF 2)

Date: MAY 2021
Designed: D. BARNES
Drawn: G.LEUENBERGER
Reviewed: G.ROBINSON, P.E.
CP&Y Proj: AUST1600646.01

SHEET
E-40

REFERENCES: AUST1600646.01 Border Base.dwg _Std ENVIRO SEALS
May 20, 2021 – 3:54pm C:\pwworking\cpy\pw_cpy\gleuenberger\d0795251\AUST1600646.01_7_E-40_CPY.dwg

GENERAL NOTES	NOTES BY SYMBOL (X)
1. DEMOLISH ALL UNUSED CONDUCTORS. REMOVE CONDUIT FLUSH WITH CONCRETE, GRIND SMOOTH AND FILL WITH GROUT.	1. MARK BREAKER SECTION SPARE. 2. NEW CIRCUIT USING EXISTING SPARE BREAKER. 3. PROVIDE AND INSTALL NEW 30A CIRCUIT BREAKER.

EXISTING PANEL L2
SERVICE VOLTAGE: 120/208V
A.I.C 10,000
LOCATIOM: SOUTH WALL OF THICKENER COMPLEX
MOUNTING: SURFACE
MAIN BREAKER 125A AMPS 3P 4W

DESCRIPTION	BREAKER POLE	BREAKER AMP	"CKT NO"	"BUS CONN"	"CKT NO"	BREAKER POLE	BREAKER AMP	DESCRIPTION	
RECEPTACLE WP– SOUTH WALL	1	20	1		2	1	20	RECEPTACLE WP– SOUTH WALL	
RECEPTACLE WP– SOUTH WALL	1	20	3		4	1	20	RECEPTACLE WP– SOUTH WALL	
RECEPTACLE WP– COLUMN B10 H RUN	1	20	5		6	1	20	RECEPTACLE WP– COLUMN B08 H RUN	
RECEPTACLE WP– COLUMN B10 H RUN	1	20	7		8	1	20	RECEPTACLE WP– COLUMN B08 H RUN	
RECEPTACLE WP– COLUMN B10 H RUN	1	20	9		10	1	20	RECEPTACLE WP– EAST WALL	
RECEPTACLE WP– SE WALL	1	20	11		12	1	20	RECEPTACLE WP– SOUTH WALL	
RECEPTACLE WP– WEST WALL	1	20	13		14	1	20	SPARE– OLD WALL DAMPERS	
SPARE – TO OLD CI2 ANALYZER PBX	1	20	15		16	1	20	FIT 104–OBSOLETE METER	
LIT 21A1 – NPW WELL LEVEL TRANSMITTER	1	20	17		18	1	20	RECEPTACLE WP– BY NPW PUMP #1	
RECEPTACLE WP– WEST WALL COL. C10	1	20	19		20	1	20	FLOW VAULT LIGHT	
SPARE – WEST WALL COL. C10	1	20	21		22	1	20	GBT#1&2–SLUDGE & POLYMER FLOW METER	
SPARE – WEST WALL COL. C10	1	20	23		24	1	20	GBT#3&4–SLUDGE & POLYMER FLOW METER	(1)
FIT 23A1 – NPW FLOW TO HYDRO TANK	1	20	25		26	1	20	GBT#5&6–SLUDGE & POLYMER FLOW METER	
SPARE	1	20	27		28	1	20	SPARE	
SPACE			29		30			SPACE	
SPACE			31		32			SPACE	
SPACE			33		34			SPACE	
SPACE			35		36			SPACE	
SPACE			37		38			SPACE	
SPACE			39		40			SPACE	
SPACE			41		42			SPACE	

EXISTING PANEL L2

EXISTING PANEL LB
SERVICE VOLTAGE: 120/208V
A.I.C 10,000
LOCATION: OUTSIDE SOUTH WALL OF STORAGE ROOM
MOUNTING: SURFACE
MAIN BREAKER 110A AMPS 3P 4W

DESCRIPTION	BREAKER POLE	BREAKER AMP	"CKT NO"	"BUS CONN"	"CKT NO"	BREAKER POLE	BREAKER AMP	DESCRIPTION
LIT#119 TROUGH #1 T–PCP–9	1	20	1		2	1	20	SPARE
SPARE	1	20	3		4	1	20	SECURITY
LIT#125 POLYMER #1	1	20	5		6	1	20	LIT#126 POLYMER #2
LCP #1	1	20	7		8	1	20	LIT#130
LCP #2	1	20	9		10	1	20	LIT#110
SPARE	1	20	11		12	1	20	SPARE
TICP/BR. 105,106,107	1	20	13		14	1	20	TICP
SPARE	1	20	15		16	1	20	LIT#7 LIFT STATION
UPS	2	60	17		18	1	20	POLE LIGHTS 2
–	–	–	19		20	1	20	POLE LIGHTS POLE
SPARE	1	20	21		22	1	20	SECURITY
SPARE	1	20	23		24	1	20	SPARE
UPS–BYPASS CIRCUIT TO PANEL LB	2	60	25		26	1	20	SPARE
–	–	–	27		28	1	20	TC–PMU–002
TC–LIT–19B1 PAT 2	1	20	29		30	1	20	TC–PMU–001
TC–LCV–17B1	1	20	31		32	1	20	TC–LCV–17017
TC–LCV–17B1	1	20	33		34	1	20	TC–LCV–17A1
TC–LCV–17A2	1	20	35		36	1	20	TC–LIT–19A2
TC–LCV–17A2	1	20	37		38	1	20	TC–LIT–19A1
TC–LCV–17B2	1	20	39		40	1	20	TC–LIT–19B2–PAT4
TC–LCV–17B2	1	20	41		42	1	20	SPARE

EXISTING PANEL LB

EXISTING PANEL LU
SERVICE VOLTAGE: 120/208V
A.I.C 10,000
LOCATION: WEST WALL OF STORAGE ROOM
MOUNTING: SURFACE
MAIN BREAKER 60 AMPS 3P 4W

	DESCRIPTION	BREAKER POLE	BREAKER AMP	"CKT NO"	"BUS CONN"	"CKT NO"	BREAKER POLE	BREAKER AMP	DESCRIPTION
(1)	SPARE	1	20	1		2	1	20	CONTROL ROOM REC RIGHT
(1)	SPARE	1	20	3		4	1	20	CONTROL ROOM REC LEFT
	GBT PLC PNL	1	20	5		6	1	20	SPACE
	SPACE			7		8	3	20	CU–4
	CU–5	2	20	9		10	3	20	CU–4
	CU–5	2	20	11		12	3	20	CU–4
	SPACE			13		14			SPACE
	SPACE			15		16			SPACE
	SPACE			17		18			SPACE
	SPARE	3	20	19		20			SPACE
	–	–	–	21		20			SPACE
	–	–	–	23		24			SPACE

EXISTING PANEL LU

PANEL LP–T5
SERVICE VOLTAGE: 120/208V
A.I.C 10,000
LOCATION: WEST ELECTRICAL ROOM
MOUNTING: SURFACE
MAIN BREAKER 225 AMPS 3P 4W

	DESCRIPTION	BREAKER POLE	BREAKER AMP	"CKT NO"	"BUS CONN"	"CKT NO"	BREAKER POLE	BREAKER AMP	DESCRIPTION	
(2)	**PV–TC01–011**	3	20	1		2	1	20	SOUTH /WEST REC	
	–	–	–	3		4	1	20	NORTH/EAST REC	
	–	–	–	5		6	1	20	SPARE	
	ELECTRICAL ROOM LIGHTS	1	20	7		8	1	20	SPARE	
(2)	**PV–TC01–021**	3	20	9		10	1	20	SPARE	
	–	–	–	11		12	1	20	SPARE	
	–	–	–	13		14	1	20	SPARE	
(2)	**PV–TC01–031**	3	20	15		16	1	20	SPARE	
	–	–	–	17		18	1	20	NETWORK RACK	
	–	–	–	19		20	1	20	WEST EXIT SIGN	
(2)	**PV–TC01–041**	3	20	21		22	1	20	**WALL PACK**	(2)
	–	–	–	23		24	1	20	FIT–TC01–03A5, AIT–TC01–500, AIT–TC01–501, LIT–TC01–051	
	–	–	–	25		26	1	20	FIT–TC01–03A4, AIT–TC01–400, AIT–TC01–401, LIT–TC01–041	
(2)	**PV–TC01–051**	3	20	27		28	1	20	FIT–TC01–03A3, AIT–TC01–300, AIT–TC01–301, LIT–TC01–031	
	–	–	–	29		30	1	20	FLOW METERS	
	–	–	–	31		32	1	20	**FIT–TC01–03A1, AIT–TC01–100, AIT–TC01–101, LIT–TC01–011**	(2)
	NORTH EXIT SIGN	1	20	33		34	1	20	**FIT–TC01–03A2, AIT–TC01–200, AIT–TC01–201, LIT–TC01–021**	(2)
	SPARE	1	20	35		36	1	**30**	**LPU–1**	(3)
	SPARE	1	20	37		38	1	20	SPARE	
	SPARE	1	20	39		40	1	20	SPARE	
	SPARE	1	20	41		42	1	20	SPARE	

EXISTING PANEL LP-T5

CP&Y, INC.
TBPE FIRM REGISTRATION NO. F-1741

NO.	REVISION	BY	DATE

VERIFY SCALE 0 1" BAR IS ONE INCH ON ORIGINAL DRAWING. IF NOT ONE INCH ON THIS SHEET, ADJUST SCALE

CITY OF AUSTIN – AUSTIN WATER
HORNSBY BEND BMP CENTRIFUGES

PANEL SCHEDULE – FIXTURE SCHEDULE (SHEET 2 OF 2)

Date: MAY 2021
Designed: D. BARNES
Drawn: G.LEUENBERGER
Reviewed: G.ROBINSON, P.E.
CP&Y Proj: AUST1600646.01

SHEET
E–41

REFERENCES: AUST1600646.01 Border Base.dwg _Std ENVIRO SEALS
May 24, 2021 – 9:53am C:\pwworking\cpy\pw_cpy\gleuenberger\d0795251\AUST1600646.01_7_E-41_CPY.dwg

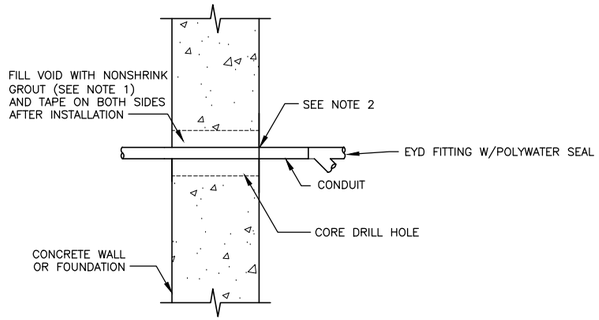

NOTES:
1. GROUT SHOULD BE EXPOXY OR NON-SHRINK GROUT.
2. WRAP PIPE TAPE WITH 50% OVERLAP THROUGH WALL PENETRATION AND BEYOND BOTH SIDES OF THE WALL A MINIMUM OF 6 INCHES.

1 WATERTIGHT CONDUIT PENETRATION
SCALE: NTS

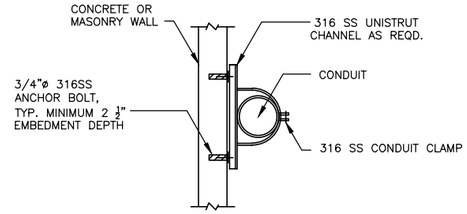

NOTES:
1. FOR CONCRETE MASONRY WALL USE EXPANSION ANCHORS.
2. ALL HARDWARE TO BE 316SS.
3. USE HOLLOW WALL TOGGLE BOLTS 316SS.

2 CONDUIT SUPPORT
SCALE: NTS

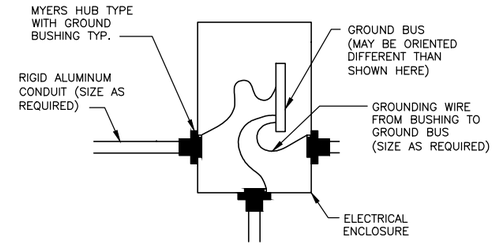

3 ENCLOSURE/CONDUIT DETAIL
SCALE: NTS

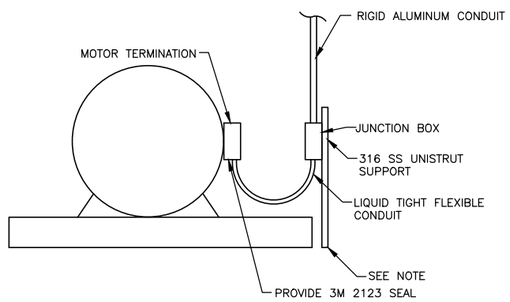

NOTE:

STRUT SUPPORT: USE POST BASE FOR FLOOR ATTACHMENT.

4 TYPICAL MOTOR CONNECTION
SCALE: NTS

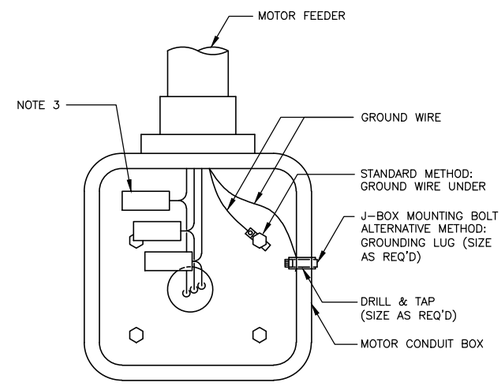

NOTES:
1. STANDARD GROUNDING METHOD IS TO USE A PRESSURE TYPE LUG (SIZE AS REQUIRED) ON GROUND WIRE INSTALLED UNDER JUNCTION
2. ALTERNATIVE GROUNDING METHOD FOR NON-EXPLOSION PROOF MOTORS WITHOUT JUNCTION BOX MOUNTING BOLTS IS TO DRILL AND TAP THE SIDE WALL OF THE MOTOR JUNCTION BOX AND INSTALL A GROUNDING LUG (SIZE AS REQUIRED).
3. USE POLARIS LUG BLOCKS SIZED APPROPRIATELY TO TERMINATE CONDUCTORS. CONDUCTORS TO BE TERMINATED USING SILICON FILLED POLARIS BLOCKS SIZED APPROPRIATELY FOR CONDUCTOR.

5 MOTOR CONDUIT BOX CONNECTION DETAIL
SCALE: NTS

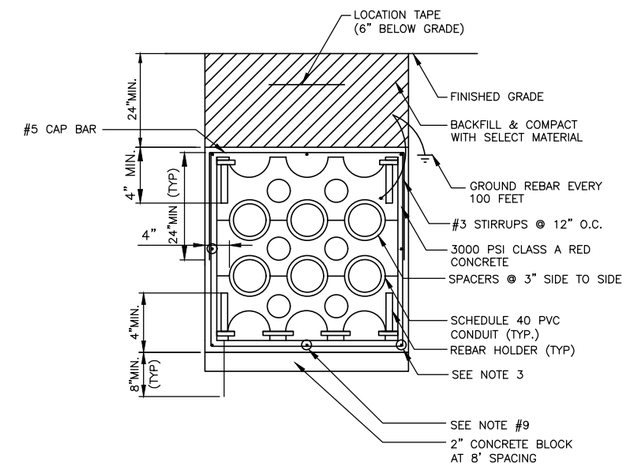

NOTES:

1. CONCRETE ENCASEMENT: ALL CONCRETE SHALL BE PER CAST-IN-PLACE CONCRETE SPECIFICATION (4000 PSI MINIMUM WITH 3/8" AGGREGATE).
2. INSTALL SPACERS EVERY 5 FEET. ALL SPACERS TO PROVIDE 3" O.C. SIDE TO SIDE VERTICAL AND HORIZONTAL SEPARATION BETWEEN CONDUITS. SPACERS TO BE CARLON PLASTIC SPACERS OR EQUIVALENT.
3. INSTALL #5 STEEL REINFORCING BARS ACROSS TOP OF CAP AND IN EACH CORNER OF THE CONCRETE ENCASEMENT. OVERLAP REBAR MINIMUM STD HOOK @ EA END OR 24" AT EACH END IF DUCTBANK DEPTH IS 30" GREATER.
4. TIE HORIZONTAL AND VERTICAL REBARS TOGETHER WITH #16 STEEL TIE WIRE.
5. CONTRACTOR TO USE CONCRETE BLOCKS TO SUPPORT DUCT BANK CAGE A MINIMUM OF 2" OFF THE GROUND.
6. PROVIDE A SELF SUPPORTING REBAR CAGE. PROVIDE MORE REINFORCING BARS AT BOTTOM THAN TOP, SIMILAR TO A BEAM REINFORCING DESIGN. REBAR CAGE NOT SHOWN FOR CLARITY. COORDINATE CAGE DESIGN BY PROFESSIONAL ENGINEER LICENSED IN STATE WHERE THE PROJECT IS BUILT WITH OWNER REPRESENTATIVE. APPROVAL OF REBAR STRUCTURE REQUIRED FROM OWNER REPRESENTATIVE BEFORE POURING CONCRETE.
7. REBARS SHALL BE GRADE 60 DEFORMED BARS CONFORMING TO ASTM A615.
8. PROVIDE #5@12"O.C. CONT T&B IF DUCTBANK WIDTH IS MORE THAN 12"
9. PROVIDE #5@12"O.C. EA. SIDE IF DUCTBANK DEPTH IS MORE THAN 12".

6 ELECTRICAL CONDUIT SPACER FOR UNDER GROUND DUCTBANK
SCALE: NTS

SCALE: NTS

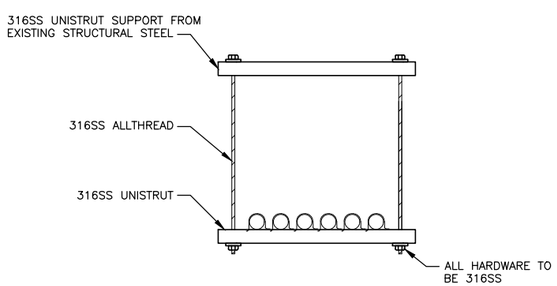

7 TYPICAL CONDUIT RACK DETAIL
SCALE: NTS

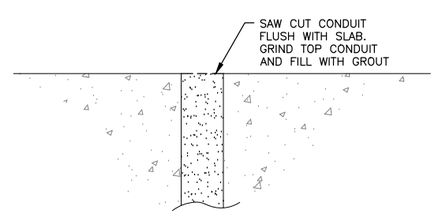

8 DEMOLITION CONDUIT DETAIL
SCALE: NTS

REFERENCES: AUST16000646.01 Border Base.dwg _Std ENVIRO SEALS
May 20, 2021 – 3:57pm C:\pwworking\cpy\pw_cpy\gleuenberger\d0795251\AUST16000646.01_7_E-42_CPY.dwg

CP&Y, INC.
TBPE FIRM REGISTRATION NO. F-1741

CITY OF AUSTIN

STATE OF TEXAS
GERALD P. ROBINSON, JR.
112423
LICENSED
PROFESSIONAL ENGINEER
08/27/2021

NO.	REVISION	BY	DATE

VERIFY SCALE 0 1"
BAR IS ONE INCH ON ORIGINAL DRAWING. IF NOT ONE INCH ON THIS SHEET, ADJUST SCALE

CITY OF AUSTIN – AUSTIN WATER
HORNSBY BEND BMP CENTRIFUGES

ELECTRICAL DETAILS
(SHEET 1 OF 2)

Date: MAY 2021
Designed: D. BARNES
Drawn: G.LEUENBERGER
Reviewed: G.ROBINSON, P.E.
CP&Y Proj: AUST16000646.01

SHEET
E-42

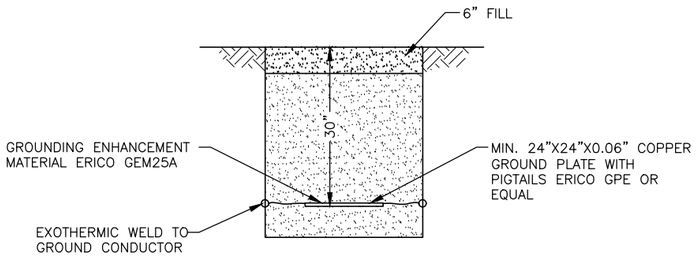

1 GROUND PLATE
SCALE: NTS

MATERIAL NOTES:
1. CONSTRUCT SUPPORT STRUCTURE USING 12-GAUGE STEEL-SLOTTED CHANNEL UNISTRUT METALFRAMING ANGLE FITTINGS. BOLTS AND NUTS AS SHOWN. THE SUPPORT STRUCTURE SHALL BE STATIONARY. ADDITIONAL BRACING MAY BE REQUIRED.
2. 3/8" THREADED ANCHOR BOLTS IN CONCRETE SHALL HAVE A MIN. PULL-OUT STRENGTH OF 2000 LBS.

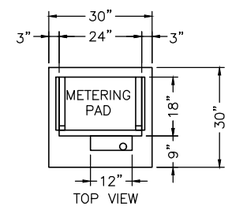

TOP VIEW

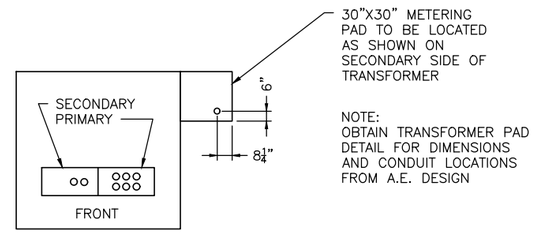

TRANSFORMER PAD

NOTE:
OBTAIN TRANSFORMER PAD DETAIL FOR DIMENSIONS AND CONDUIT LOCATIONS FROM A.E. DESIGN

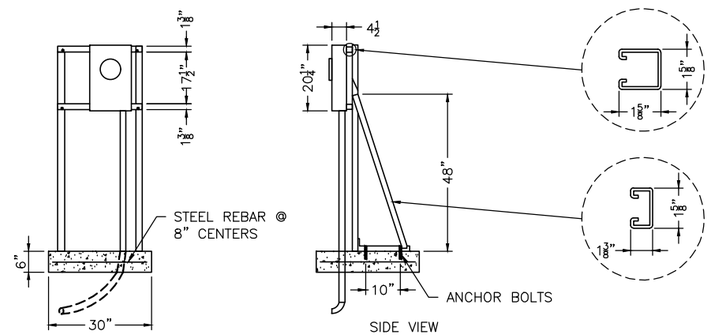

SIDE VIEW

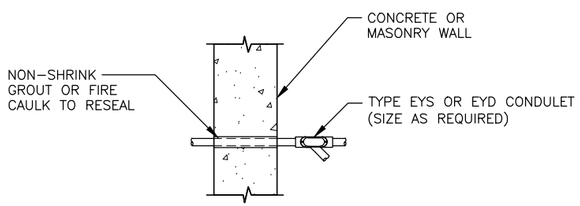

NOTE:
FIRE CAULK FOR DRYWALL PENETRATIONS ONLY.

2 CONDUIT DRAIN
SCALE: NTS

NOTES: 6 TERMINAL AND 13 TERMINAL
1. METERING AT THE TRANSFORMER PAD IS ONLY AVAILABLE FOR SINGLE METER INSTALLATION.
2. CURRENT TRANSFORMERS TO BE INSTALLED AT THE SECONDARY BUSHINGS OF THE TRANSFORMER BY AUSTIN ENERGY.
3. METER ENCLOSURE SHALL BE INSTALLED FACING THE FRONT OF THE TRANSFORMER PAD.
4. INSTALL METER CONTROL CABLE CONDUIT (1-1/4" SCHEDULE 80 PVC OR RIGID METAL) TO ENTER METER ENCLOSURE AT BOTTOM-RIGHT.
5. ALTERNATE LOCATION: WITH APPROVAL OF THE COMPLEX METERING OPERATION SECTION, THE METER ENCLOSURE MAY BE INSTALLED ON A PERMANENT WALL WITHIN SIGHT (VISIBLE AND NOT MORE THAN 30 FEET) FROM THE TRANSFORMER PAD.
6. STEEL BARRIER POSTS WILL BE REQUIRED WHEN THE TRANSFORMER PAD IS INSTALLED WITHIN 4 FEET OF A TRAFFIC AREA.
7. HEIGHT TO CENTER OF THE METER SOCKET OPENING FROM A PERMANENT STANDING SURFACE SHALL BE 48"=72".
8. RUN A #6 GROUND WIRE (EITHER SOLID OR STRANDED) FROM THE SECONDARY COMPARTMENT OF THE PAD MOUNT TRANSFORMER TO THE METER SOCKET. BOND THE GROUND WIRE TO THE METER SOCKET.

3 S-1 SOCKET ENCLOSURE (TYPICAL INSTALLATION)
SCALE: NTS

CP&Y, INC.
TBPE FIRM REGISTRATION NO. F-1741
STATE OF TEXAS
GERALD P. ROBINSON, JR.
112423
LICENSED
PROFESSIONAL ENGINEER
06/27/2021
CITY OF AUSTIN
EST. 1839
PROVIDED

NO.	REVISION	BY	DATE

VERIFY SCALE 0 1"
BAR IS ONE INCH ON ORIGINAL DRAWING. IF NOT ONE INCH ON THIS SHEET, ADJUST SCALE

CITY OF AUSTIN - AUSTIN WATER
HORNSBY BEND BMP CENTRIFUGES

ELECTRICAL DETAILS
(SHEET 2 OF 2)

Date: MAY 2021
Designed: D. BARNES
Drawn: G.LEUENBERGER
Reviewed: G.ROBINSON, P.E.
CP&Y Proj. AUST1600646.01

SHEET
E-43

REFERENCES: AUST1600646.01 Border Base.dwg _Std ENVIRO SEALS
May 20, 2021 - 3:59pm C:\pwworking\cpy\gw_cpy\gleuenberger\d0795251\AUST1600646.01_7_E-43_CPY.dwg

INSTRUMENT SOCIETY OF AMERICA TABLE

FIRST LETTER (S)			SUCCEEDING LETTERS		
	PROCESS OR INITIATING VARIABLE	MODIFIER	READOUT OR PASSIVE FUNCTION	OUTPUT FUNCTION	MODIFIER
A	ANALYSIS (+)		ALARM		
B	BURNER, COMBUSTION		USERS CHOICE (+)	USERS CHOICE (+)	USERS CHOICE (+)
C	USER'S CHOICE (+)			CONTROL	
D	USER'S CHOICE (+)	DIFFERENTIAL			
E	VOLTAGE		SENSOR (PRIMARY ELEMENT)		
F	FLOW RATE	RATIO (FRACTION)			
G	USER'S CHOICE (+)		GLASS, VIEWING DEVICE		
H	HAND				HIGH
I	CURRENT (ELECTRICAL)		INDICATE		
J	POWER	SCAN			
K	TIME, TIME SCHEDULE	TIME RATE OF CHANGE		CONTROL STATION	
L	LEVEL		LIGHT		LOW
M	MOTOR	MOMENTARY			MIDDLE, INTERMEDIATE
N	USERS CHOICE (+)		USERS CHOICE (+)	USERS CHOICE (+)	USERS CHOICE (+)
O	USERS CHOICE (+)		ORIFICE, RESTRICTION		
P	PRESSURE, VACUUM		POINT (TEST) CONNECTION		
Q	QUANTITY	INTEGRATE, TOTALIZE			
R	RADIATION		RECORD		
S	SPEED, FREQUENCY	SAFETY		SWITCH	
T	TEMPERATURE			TRANSMIT	
U	MULTIVARIABLE		MULTIFUNCTION	MULTIFUNCTION	MULTIFUNCTION (+)
V	VIBRATION MECH. ANALYSIS			VALVE, DAMPER, LOUVER	
W	WEIGHT, FORCE		WELL		
X	UNCLASSIFIED (+)	X AXIS	UNCLASSIFIED	UNCLASSIFIED (+)	UNCLASSIFIED (+)
Y	EVENT, STATE OR PRESENCE	Y AXIS		RELAY, COMPUTE, CONVERT	
Z	POSITION, DIMENSION	Z AXIS		DRIVER, ACTUATOR, UNCLASSIFIED FINAL CONTROL ELEMENT	

WHEN USED, EXPLANATION IS SHOWN ADJACENT TO INSTRUMENT SYMBOL. SEE ABBREVIATIONS AND LETTER SYMBOLS.

INSTRUMENT IDENTIFICATION

	PRIMARY LOCATION NORMALLY ACCESSIBLE TO OPERATOR (2)	FIELD MOUNTED	AUXILIARY LOCATION NORMALLY ACCESSIBLE TO OPERATOR (2)
DISCRETE INSTRUMENTS			
SHARED DISPLAY SHARED CONTROL			
COMPUTER FUNCTION			
PROGRAMMABLE LOGIC CONTROL			
		INSTRUMENT WITH LONG TAG NUMBERS	INSTRUMENTS SHARING COMMON HOUSING
	PILOT LIGHT	C 12 PANEL MOUNTED PATCHBOARD POINT 12	P PURGE OR FLUSHING DEVICE
	R RESET FOR LATCH-TYPE ACTUATOR	DIAPHRAGM SEAL	I UNDEFINED INTERLOCK LOGIC

(1)

ABBREVIATIONS OF THE USER'S CHOICE SUCH AS IP1 (INSTRUMENT PANEL #1), IC2 (INSTRUMENT CONSOLE #2), CC3 (COMPUTER CONSOLE #3), ETC., MAY BE USED WHEN IT IS NECESSARY TO SPECIFY INSTRUMENT OR FUNCTION LOCATION.

(2)

NORMALLY INACCESSIBLE OR BEHIND-THE-PANEL DEVICES OR FUNCTIONS MAY BE DEPICTED BY USING THE SAME SYMBOLS BUT WITH DASHED HORIZONTAL BARS, I.E.

HAND SWITCH ABBREVIATIONS

H/O/A	HAND/OFF/AUTO
L/O/C	LOCAL/OFF/COMPUTER
L/O/R	LOCAL/OFF/REMOTE
O/C/S	OPEN/CLOSE/STOP
L/C	LOCAL/COMPUTER
L/R	LOCAL/REMOTE
O/C	OPEN/CLOSE
A/H	AUTO/HAND
L/A	LOCAL/AUTO
O/O/C	ON/OFF/COMPUTER
N/B	NORMAL/BYPASS

GENERAL ABBREVIATIONS

AS	AIR SUPPLY
COM	COMMUNICATION
CPU	CENTRAL PROCESSOR UNIT
DC	DIRECT CURRENT
DCU	DISTRIBUTED CONTROL UNIT
EI	VOLTAGE INDICATION
ES	ELECTRIC SUPPLY
ETM	ELAPSED TIME METER
FIT	FLOW INDICATOR TRANSMITTER
FOC	FIBER OPTIC CABLE
FOM	FIBER OPTIC MODEM
FLP	FAIL LAST POSITION
FO	FAIL OPEN
F/O	FIBER OPTIC CABLE
FOPP	FIBER OPTIC PATCH PANEL
FREQ	FREQUENCY
FS	FLOW SWITCH
GW	MODBUS GATEWAY
HDC	HISTORICAL DATA COLLECTION
HMI	HUMAN MACHINE INTERFACE
II	CURRENT INDICATION
I/O	PLC INPUT/OUTPUT MODULE
JI	POWER INDICATION
LAH	LEVEL HIGH ALARM
LAHH	LEVEL HIGH HIGH ALARM
LCP	LOCAL CONTROL PANEL
LOP	LOCAL OPERATOR PANEL
LE	LEVEL ELEMENT
LI	LEVEL INDICATOR
LIT	LEVEL INDICATOR TRANSMITTER
LCP	LOCAL CONTROL PANEL
LOP	LOCAL OPERATOR PANEL
LS	LEVEL SWITCH
LSH	LEVEL SWITCH HIGH
LSL	LEVEL SWITCH LOW
MC	MOTOR CONTROLLER
MCP	MASTER CONTROL PANEL
NC	NORMALLY CLOSED
NO	NORMALLY OPEN
NOC	PLC ETHERNET TCP/IP NETWORK MODULE
OIU	OPERATOR INTERFACE UNIT
OEM	ORIGINAL EQUIPMENT MANFACTURER
ORP	OXYGEN REDUCTION POTENTIAL
OWS	OPERATOR WORK STATION
PE	PRESSURE SENSOR
PI	PRESSURE INDICATOR
PIT	PRESSURE INDICATOR TRANSMITTER
PLC	PROGRAMMABLE LOGIC CONTROLLER
PS	POWER SUPPLY
PSH	PRESSURE SWITCH HIGH
PSL	PRESSURE SWITCH LOW
PWR	POWER SUPPLY
RE	REFERENCE
RIO	REMOTE INPUT OUTPUT
RTU	REMOTE TERMINAL UNIT
SE	SPEED SENSOR
SC	SPEED / POSITION CONTROL
STPT	SETPOINT
SIK	SPEED INDICATE CONTROL STATION
SI	SPEED/FREQUENCY INDICATION
SL	SLUDGE
SW	SWITCH
TE	TEMPERATURE ELEMENT
TI	TEMPERATURE INDICATION
TIT	TEMPERATURE INDICATOR TRANSMITTER
UPS	UNINTERRUPTIBLE POWER SUPPLY
UV	ULTRAVIOLET
VFD	VARIABLE FREQUENCY DRIVE
YA	EVENT ALARM
YL	EVENT INDICATION
YS	EVENT SWITCH
ZSC	CLOSE LIMIT SWITCH
ZSO	OPEN LIMIT SWITCH

PROCESS SYMBOLS

- S — SOLENOID OPERATED VALVE
- M — MOTOR OPERATED VALVE
- K — KNIFE GATE
- SLIDE GATE
- GATE VALVE
- PINCH VALVE
- BALL VALVE
- PLUG VALVE
- CHECK VALVE
- BUTTERFLY VALVE
- PUMP
- HOSE BIB
- PRIMARY ELEMENT
- M — MOTOR-ARROW DENOTES MODULATED
- M — MIXER
- A — AIR RELEASE VALVE
- TRANSIT TIME OR DOPPLER SONIC FLOW METER
- M — MAGNETIC FLOW METER
- T — THERMAL DISPERSION FLOW METER
- M — MICROWAVE SOLIDS SENSOR

LINE SYMBOLS

- (1) INSTRUMENT SUPPLY OR SOLENOID OPERATED VALVE (1)
- (2) UNDEFINED SIGNAL
- (3) PNEUMATIC SIGNAL (2)
- (4) ELECTRIC SIGNAL
- (5) HYDRAULIC SIGNAL
- (6) CAPILLARY TUBE
- (7) ELECTROMAGNETIC OR SONIC SIGNAL (GUIDED) (3)
- (8) ELECTROMAGNETIC OR SONIC SIGNAL (NOT GUIDED) (3)
- (9) INTERNAL SYSTEM LINK (SOFTWARE OR DATA LINK)
- (10) MECHANICAL LINK
- (11) PNEUMATIC BINARY SIGNAL (ON-OFF)
- (12) ELECTRIC BINARY SIGNAL (ON-OFF)
- (13) ELECTRIC ANALOG SIGNAL
- (14) CONNECTING LINES
- (15) NON-CONNECTING LINES

GENERAL NOTES

(1) THE FOLLOWING ABBREVIATIONS ARE SUGGESTED TO DENOTE THE TYPES OF POWER SUPPLY. THESE DESIGNATIONS MAY ALSO BE APPLIED TO PURGE FLUID SUPPLIES.

AS - AIR SUPPLY
IA - INSTRUMENT AIR
PA - PLANT AIR
} OPTIONS
ES - ELECTRIC SUPPLY
GS - GAS SUPPLY
HS - HYDRAULIC SUPPLY
NS - NITROGEN SUPPLY
SS - STEAM SUPPLY
WS - WATER SUPPLY

THE SUPPLY LEVEL MAY BE ADDED TO THE INSTRUMENT SUPPLY LINE, E.G, AS-100, 100-PSIG AIR SUPPLY: ES-24DC, A 24-VOLT DIRECT CURRENT POWER SUPPLY.

(2) THE PNEUMATIC SIGNAL SYMBOL APPLIES TO A SIGNAL USING ANY GAS AS THE SIGNAL MEDIUM. IF A GAS OTHER THAN AIR IS USED, THE GAS MAY BE IDENTIFIED BY A NOTE ON THE SIGNAL SYMBOL OR OTHERWISE.

ELECTROMAGNETIC PHENOMENA INCLUDE HEAT, RADIO WAVES, NUCLEAR RADIATION AND LIGHT.

DIGITAL SYSTEM I/O INTERFACE. DIRECTION OF TRIANGLE DENOTES WHETHER INPUT OR OUTPUT.

LETTER DENOTES SIGNAL TYPE. THE LETTER "A" DENOTES AN ANALOG SIGNAL. THE LETTER "D" DENOTES A DISCRETE SIGNAL. THE LETTER "FO" DENOTES FIBER OPTIC CONNECTION.

CP&Y, INC.
TBPE FIRM REGISTRATION NO. F-1741
CITY OF AUSTIN EST. 1839 FOUNDED
STATE OF TEXAS LIANG LI 96785 LICENSED PROFESSIONAL ENGINEER 05/06/21

NO.	REVISION	BY	DATE

VERIFY SCALE BAR IS ONE INCH ON ORIGINAL DRAWING. IF NOT ONE INCH ON THIS SHEET, ADJUST SCALE 0 1"

CITY OF AUSTIN – AUSTIN WATER
HORNSBY BEND BMP CENTRIFUGES

INSTRUMENTATION ABBREVIATIONS AND LEGEND

Date: MAY 2021
Designed: K. TING WU
Drawn: K. TING WU
Reviewed: L. LI, P.E.
CP&Y Proj. AUST1600646.01

SHEET
I–1

REFERENCES: _CPY_Standard_Border_Base.dwg _Std ENVIRO SEALS
May 18, 2021 – 3:08pm C:\pwworking\cpy\pw_cpy\wwu\d0795251\AUST1600646.01_8_I-1_CPY.dwg

NOTES BY SYMBOL (X)

1. PROVIDE N-TRON 108TX ETHERNET SWITCH. REFER TO SHEET I-6 DETAIL 2 FOR NETWORK RACK DETAILS AND SCOPE OF WORK. COORDINATE WITH AW FOR EQUIPMENT ID TAG.
2. PROVIDE CAT6 CABLES.
3. REFER TO SHEET I-6 DETAIL 1 FOR WORK DETAILS.

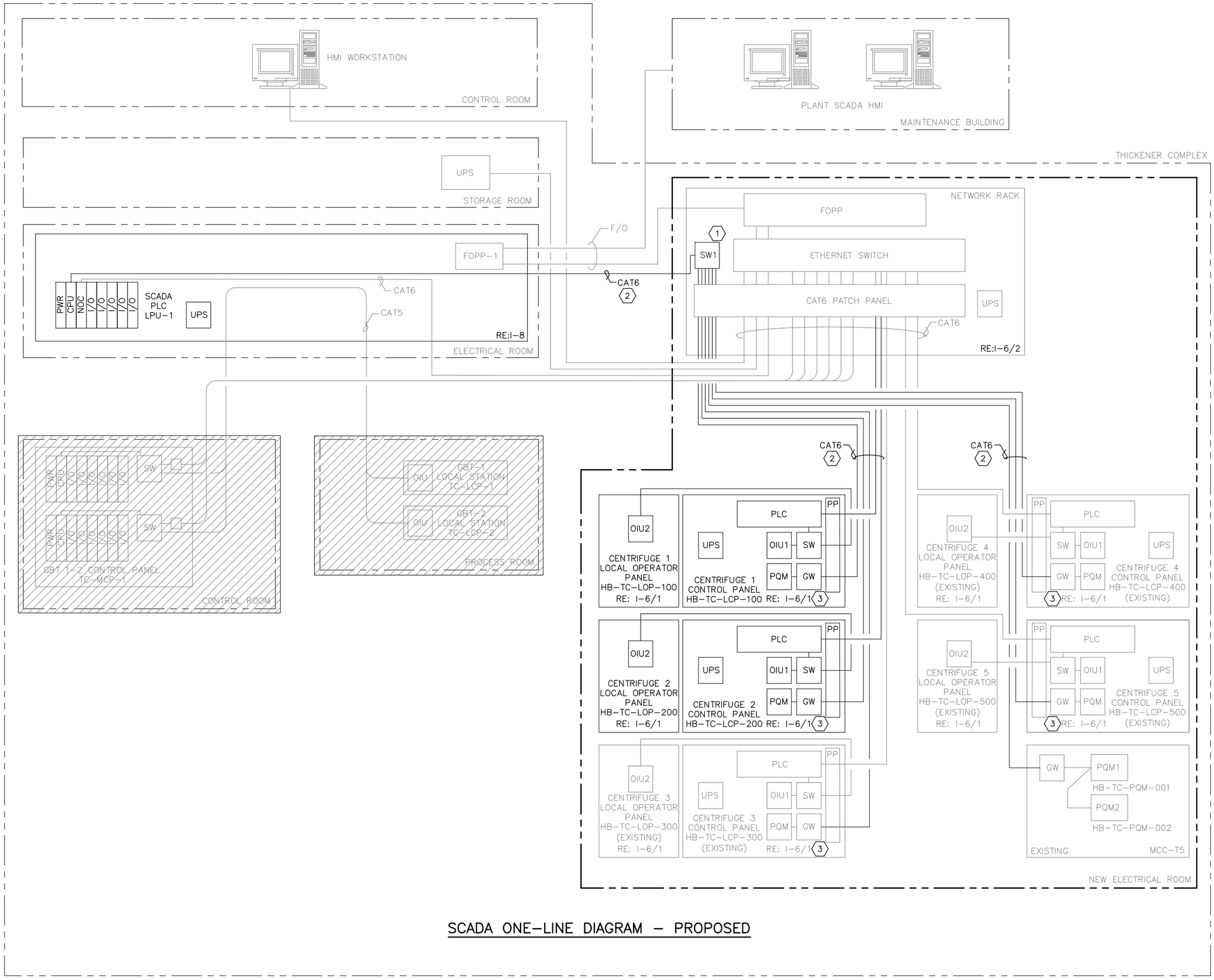

LEGEND:

CAT6	ETHERNET CABLE
CPU	CENTRAL PROCESSOR UNIT
F/O	FIBER OPTIC CABLE
FOPP	FIBER OPTIC PATCH PANEL
GW	MODBUS GATEWAY
HMI	HUMAN MACHINE INTERFACE
I/O	PLC INPUT/OUTPUT MODULE
LCP	LOCAL CONTROL PANEL
LOP	LOCAL OPERATOR PANEL
MCC	MOTOR CONTROL CENTER
NOC	PLC ETHERNET TCP/IP NETWORK MODULE
OIU	OPERATOR INTERFACE UNIT
PLC	PROGRAMMABLE LOGIC CONTROLLER
PP	CAT6 PATCH PANEL
PQM	POWER QUALITY METER (GE PQM II)
PWR	PLC POWER SUPPLY
SW	ETHERNET SWITCH
UPS	UNINTERRUPTIBLE POWER SUPPLY

SCADA ONE-LINE DIAGRAM – PROPOSED

CP&Y, INC.
TBPE FIRM REGISTRATION NO. F-1741

CITY OF AUSTIN – AUSTIN WATER
HORNSBY BEND BMP CENTRIFUGES

SCADA ONE-LINE DIAGRAM – PROPOSED

NO.	REVISION	BY	DATE

VERIFY SCALE BAR IS ONE INCH ON ORIGINAL DRAWING. IF NOT ONE INCH ON THIS SHEET, ADJUST SCALE

STATE OF TEXAS – LIANG LI – 96785 – LICENSED PROFESSIONAL ENGINEER – 05/06/21

Date: MAY 2021
Designed: K. TING WU
Drawn: K. TING WU
Reviewed: L. Li, P.E.
CP&Y Proj: AUST1600646.01

SHEET
I-2

REFERENCES: _CPY_Standard_Border_Base.dwg _Std ENVIRO SEALS
May 21, 2021 – 11:43am C:\pwworking\cpy\pw_cpy\ycowley\d0795251\AUST1600646.01_8_I-2_CPY.dwg

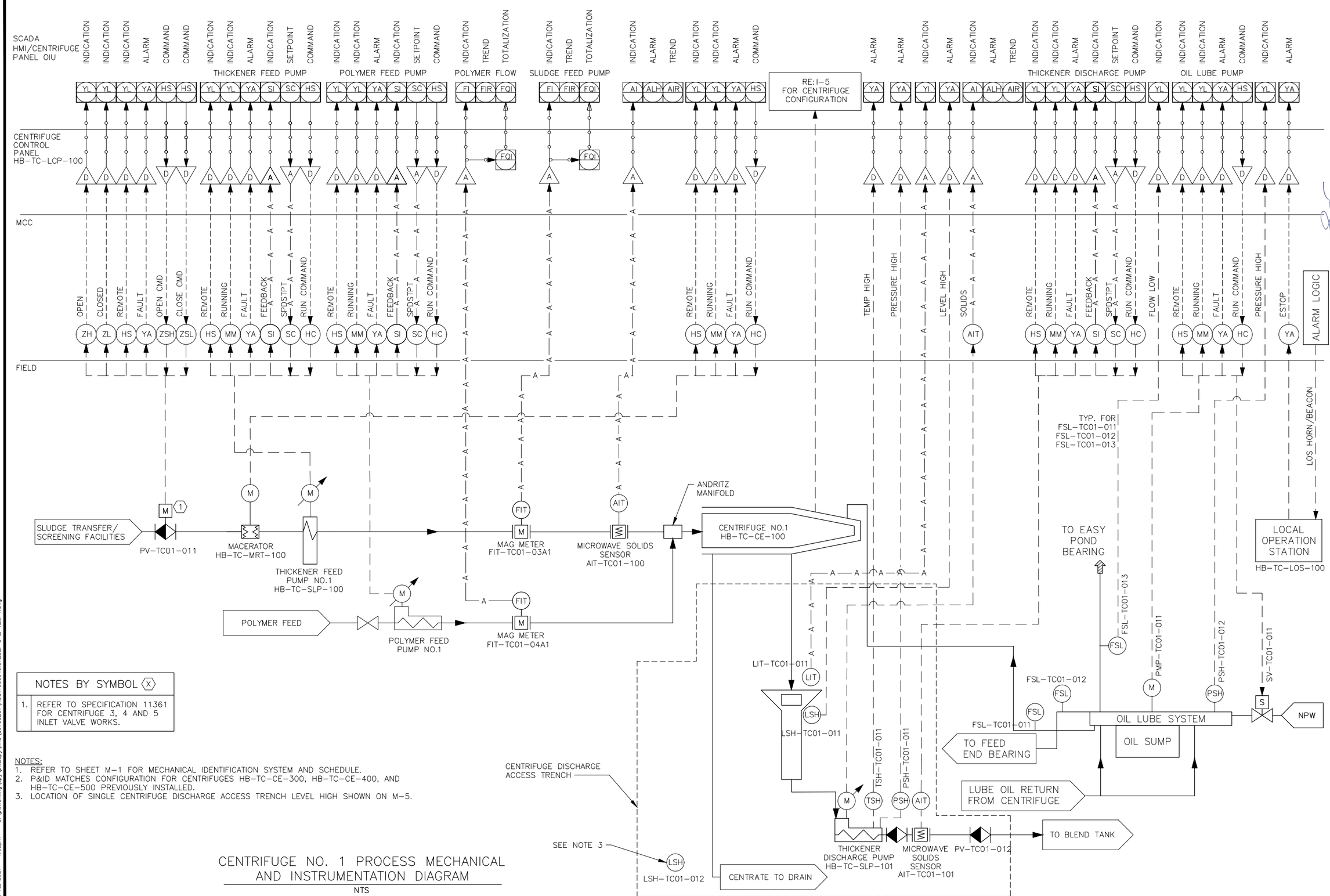

NOTES BY SYMBOL (X)	
1.	REFER TO SPECIFICATION 11361 FOR CENTRIFUGE 3, 4 AND 5 INLET VALVE WORKS.

NOTES:
1. REFER TO SHEET M-1 FOR MECHANICAL IDENTIFICATION SYSTEM AND SCHEDULE.
2. P&ID MATCHES CONFIGURATION FOR CENTRIFUGES HB-TC-CE-300, HB-TC-CE-400, AND HB-TC-CE-500 PREVIOUSLY INSTALLED.
3. LOCATION OF SINGLE CENTRIFUGE DISCHARGE ACCESS TRENCH LEVEL HIGH SHOWN ON M-5.

CENTRIFUGE NO. 1 PROCESS MECHANICAL AND INSTRUMENTATION DIAGRAM

NTS

CP&Y, INC.
TBPE FIRM REGISTRATION NO. #F-1741

CITY OF AUSTIN – AUSTIN WATER
HORNSBY BEND BMP CENTRIFUGES

CENTRIFUGE NO. 1
PROCESS MECHANICAL AND INSTRUMENTATION DIAGRAM

NO.	REVISION	BY	DATE

VERIFY SCALE 0 1" BAR IS ONE INCH ON ORIGINAL DRAWING. IF NOT ONE INCH ON THIS SHEET, ADJUST SCALE

STATE OF TEXAS LIANG LI 96785 LICENSED PROFESSIONAL ENGINEER 05/06/21

Date: MAY 2021
Designed: K. TING WU
Drawn: K. TING WU
Reviewed: L. LI, P.E.
CP&Y Proj: AUST1600646.01

SHEET I-3

REFERENCES: _CPY_Standard_Border_Base.dwg _Std ENVIRO SEALS
May 18, 2021 – 4:02pm C:\pwworking\cpy\gw_cpy\kwu\d0795251\AUST1600646.01_8_J-3 & 4_CPY.dwg

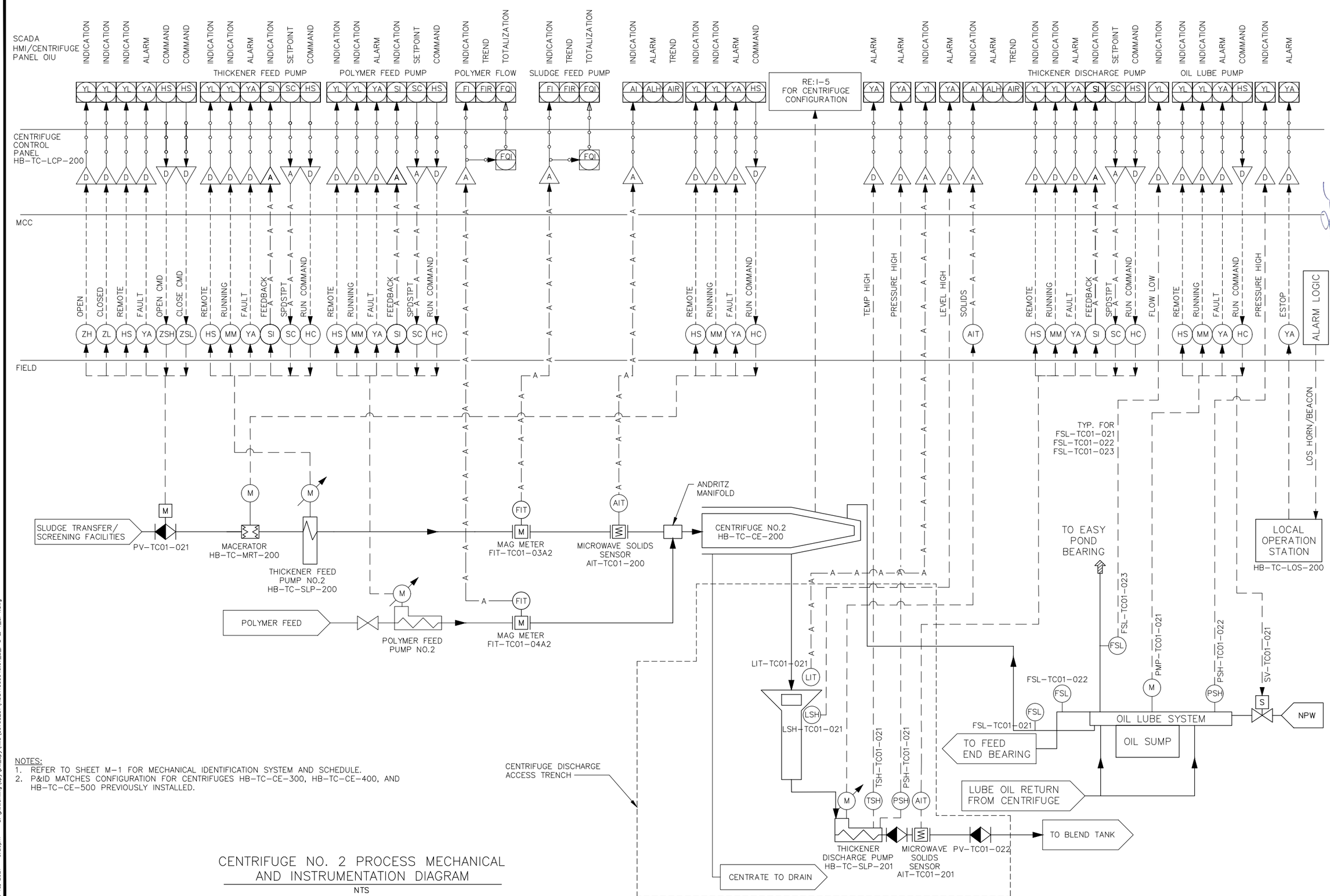

NOTES:
1. REFER TO SHEET M-1 FOR MECHANICAL IDENTIFICATION SYSTEM AND SCHEDULE.
2. P&ID MATCHES CONFIGURATION FOR CENTRIFUGES HB-TC-CE-300, HB-TC-CE-400, AND HB-TC-CE-500 PREVIOUSLY INSTALLED.

CENTRIFUGE NO. 2 PROCESS MECHANICAL AND INSTRUMENTATION DIAGRAM

NTS

CP&Y, INC.
TBPE FIRM REGISTRATION NO. #F-1741

CITY OF AUSTIN – AUSTIN WATER
HORNSBY BEND BMP CENTRIFUGES

CENTRIFUGE NO. 2
PROCESS MECHANICAL AND INSTRUMENTATION DIAGRAM

NO.	REVISION	BY	DATE

VERIFY SCALE 0 1" BAR IS ONE INCH ON ORIGINAL DRAWING. IF NOT ONE INCH ON THIS SHEET, ADJUST SCALE

STATE OF TEXAS LIANG LI 96785 LICENSED PROFESSIONAL ENGINEER 05/06/21

Date: MAY 2021
Designed: K. TING WU
Drawn: K. TING WU
Reviewed: L. Li, P.E.
CP&Y Proj: AUST1600646.01

SHEET I-4

REFERENCES: _CPY_Standard_Border_Base.dwg _Std ENVIRO SEALS
May 18, 2021 – 3:20pm C:\pwworking\cpy\gw_cpy\kwu\d0795251\AUST1600646.01_8_J-3 & 4_CPY.dwg

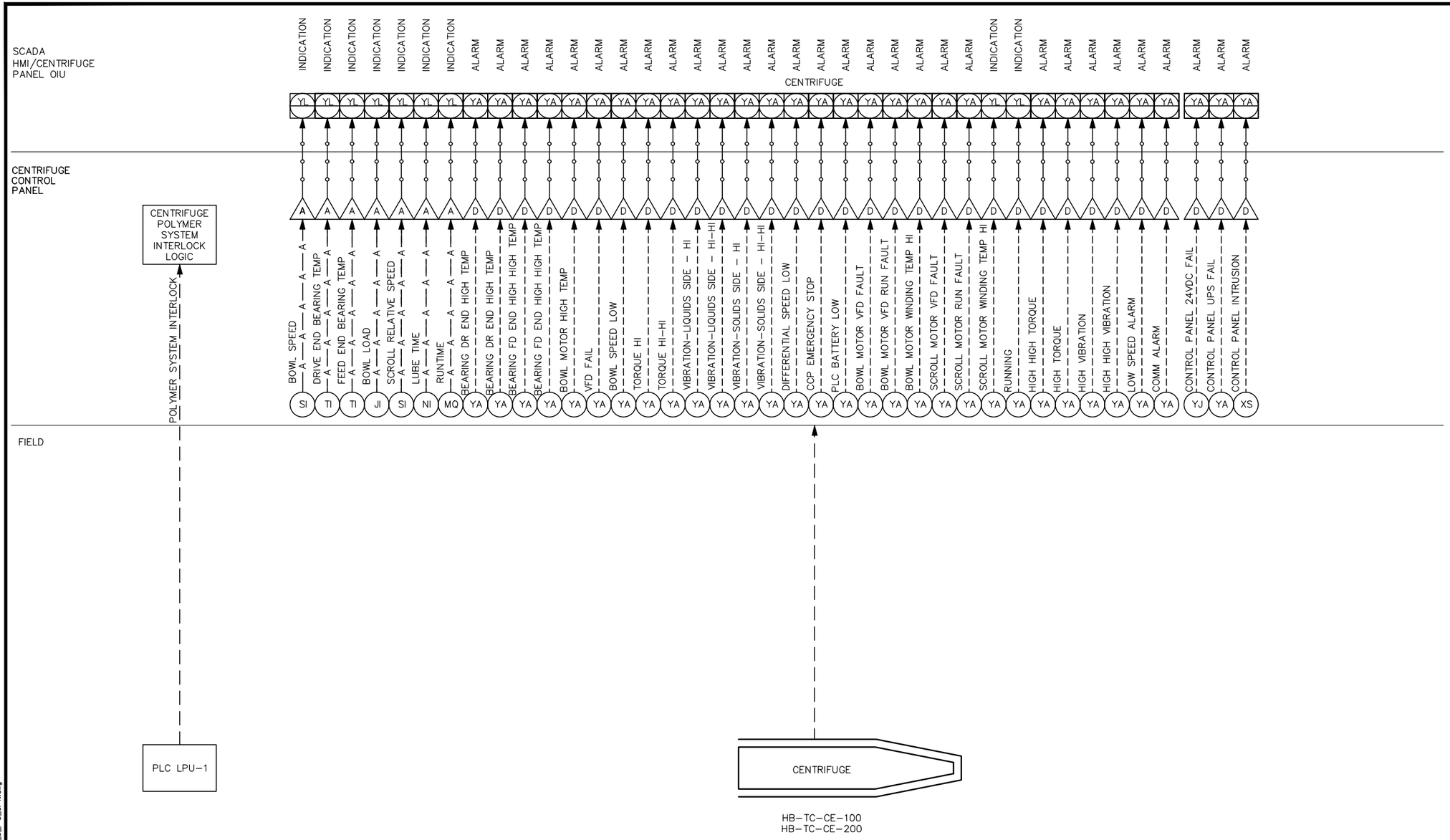

NOTES:
1. I/O LISTED ON THE DRAWING IS A TYPICAL ALARM AND STATUS FOR EQUIPMENT SCADA HMI MONITOR. THE LIST CAN BE CHANGED DURING CONSTRUCTION. COORDINATE WITH CENTRIFUGE MANUFACTURER TO OBTAIN A COMPLETE LIST OF CENTRIFUGE EQUIPMENT STATUS AND ALARMS AND PROVIDE SCADA HMI PROGRAM FOR CENTRIFUGE EQUIPMENT STATUS MONITORING AND ALARMS.
2. ALL LOCAL CONTROL PANEL OPERATION AND CONTROL FUNCTIONS ON OIU HMI SHALL BE ALSO PROGRAMMED AND AVAILABLE ON THE SCADA HMI.

CENTRIFUGE PROCESS, MECHANICAL AND INSTRUMENTATION DIAGRAM – TYPICAL

NTS. FOR CENTRIFUGE NO.1,2

NOTES:
1. P&ID MATCHES CONFIGURATION FOR CENTRIFUGES 300, 400, AND 500 PREVIOUSLY INSTALLED.

LEGEND:

DR – DRIVE
FD – FEED

CP&Y, INC.
TBPE FIRM REGISTRATION NO. F-1741

CITY OF AUSTIN – AUSTIN WATER
HORNSBY BEND BMP CENTRIFUGES

CENTRIFUGE PROCESS AND INSTRUMENTATION LOOP DIAGRAM

NO.	REVISION	BY	DATE

VERIFY SCALE 0 1" BAR IS ONE INCH ON ORIGINAL DRAWING. IF NOT ONE INCH ON THIS SHEET, ADJUST SCALE

Date: MAY 2021
Designed: K. TING WU
Drawn: K. TING WU
Reviewed: L. LI, P.E.
CP&Y Proj. AUST1600646.01

SHEET
I-5

REFERENCES: _CPY_Standard_Border_Base.dwg _Std ENVIRO SEALS
May 18, 2021 – 3:20pm C:\pwworking\cpy\pw_cpy\kwu\d0795251\AUST1600646.01_8_I-5_CPY.dwg

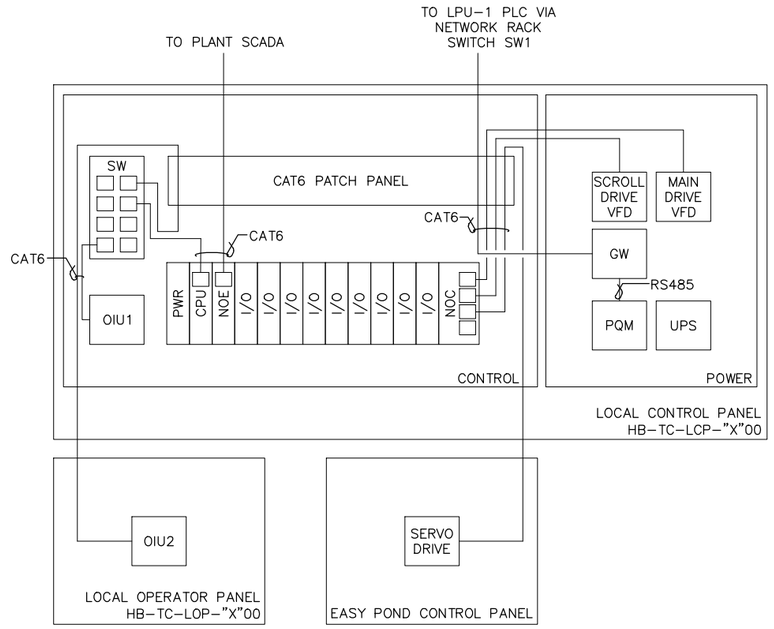

GENERAL NOTE:

1. REWIRE CAT6 CABLE FOR CENTRIFUGE 3, 4 AND 5 AS SHOWN ON THIS DIAGRAM. PLC NOE MODULE PORT SHALL BE CONNECTED TO PLANT SCADA DIRECTLY. PQM GATEWAY CAT6 CABLE SHALL BE WIRED TO LPU-1 PLC VIA NETWORK RACK SWITCH SW1. PROVIDE ALL REQUIRED TESTS. PROVIDE UPDATED OWNER MANUAL WITH THE MODIFIED NETWORK DIAGRAM DRAWING.
2. PROVIDE THIS NETWORK FOR CENTRIFUGE NO.1 AND 2. CONTACT OWNER SCADA GROUP FOR IP ADDRESS AND NETWORK CONFIGURATION REQUIREMENTS.

NOTATION TABLE	
CENTRIFUGE LCP/LOP	"X"
NO.1	1
NO.2	2
NO.3	3
NO.4	4
NO.5	5

1 CENTRIFUGE CONTROL PANEL NETWORK DIAGRAM

CENTRIFUGE NO.1, 2, 3, 4 AND 5

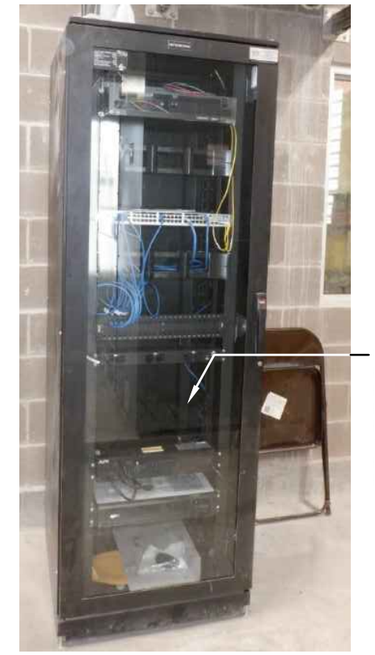

PROVIDE DIN-RAIL BACKPLATE. PROVIDE 24VDC POWER SUPPLY. REFER TO SPECIFICATION 17400 FOR POWER SUPPLY REQUIREMENTS. INSTALL N-TRON 108TX ETHERNET SWITCH AND POWER SUPPLY AT THIS SECTION. PROVIDE UPDATED RACK DRAWING.

2 NETWORK RACK

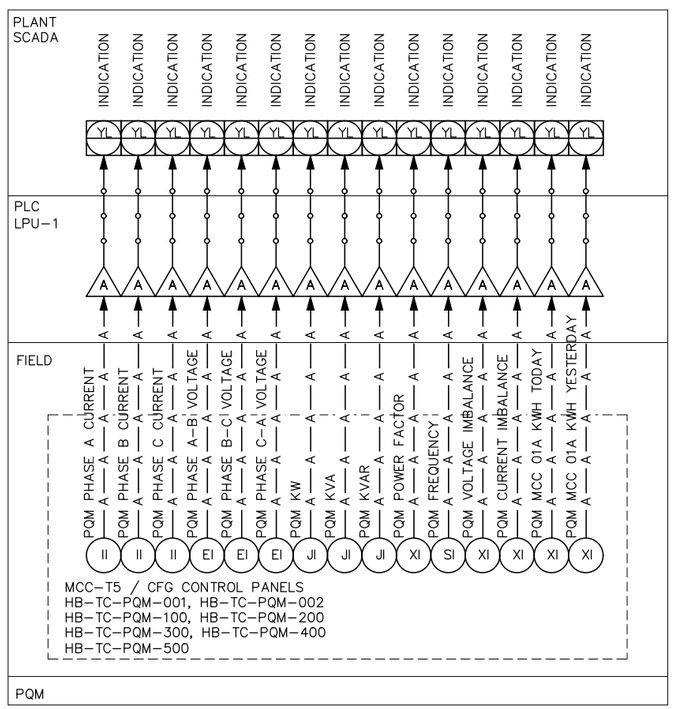

3 PQM LOOP DIAGRAM

CP&Y, INC.
TBPE FIRM REGISTRATION NO. F-1741

CITY OF AUSTIN ESTD 1839 FOUNDED

STATE OF TEXAS
LIANG LI
96785
LICENSED PROFESSIONAL ENGINEER
05/20/21

NO.	REVISION	BY	DATE

VERIFY SCALE 0 1"
BAR IS ONE INCH ON ORIGINAL DRAWING. IF NOT ONE INCH ON THIS SHEET, ADJUST SCALE

CITY OF AUSTIN – AUSTIN WATER
HORNSBY BEND BMP CENTRIFUGES

CENTRIFUGE CONTROL PANEL NETWORK DIAGRAM, NETWORK RACK AND PQM LOOP DIAGRAM

Date: MAY 2021
Designed: K. TING WU
Drawn: K. TING WU
Reviewed: L. Li, P.E.
CP&Y Proj: AUST1600646.01

SHEET
I-6

REFERENCES: _CPY_Standard_Border_Base.dwg _Std ENVIRO SEALS
May 21, 2021 – 11:44am C:\pwworking\cpy\pw_cpy\ncowley\d0795251\AUST1600646.01_8_I-6_CPY.dwg

RETURN PLC AND SWITCH TO THE OWNER.

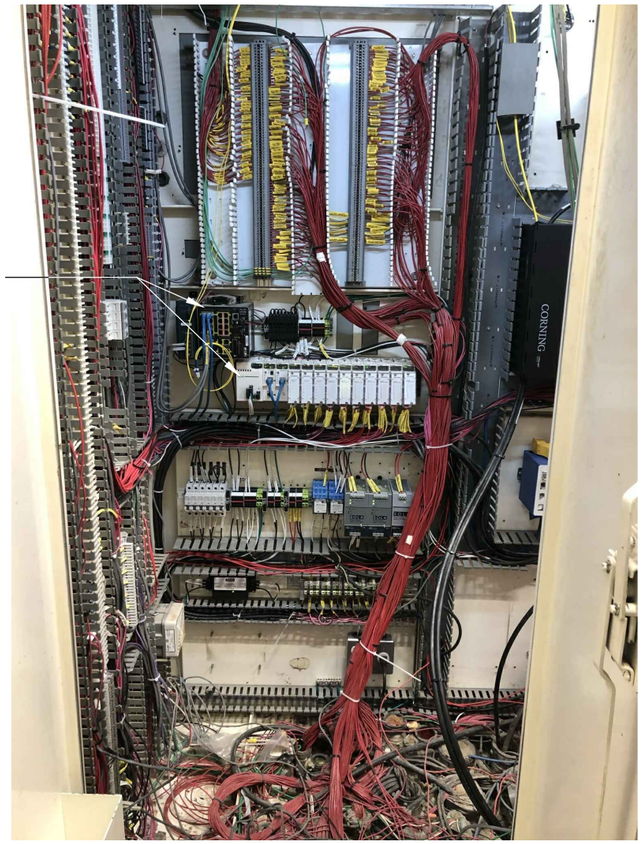

LEFT SECTION

REUSE FIBER PATCH PANEL (FOPP-1). INSTALL IN THE NEW PLC PANEL. PROVIDE FIBER WIRING DIAGRAM IN THE PLC AS-BUILT DRAWING. PROVIDE FIBER TEST AND TEST REPORT.

REINSTALL CITY NETWORK FIBER PATCH PANEL (CFOPP-1) IN NEW PLC PANEL. TEST ALL FIBER COMMUNICATION. PROVIDE TEST REPORT. PROVIDE FIBER DIAGRAM IN THE PLC PANEL DRAWING.

REINSTALL SWITCH (CITY NETWORK) IN THE NEW PANEL. PROVIDE NEW MOUNTING SUPPORT. TEST ALL FIBER COMMUNICATION AND PROVIDE TEST REPORT. PROVIDE FIBER DIAGRAM IN THE PLC DRAWING IN THE OWNER MANUAL.

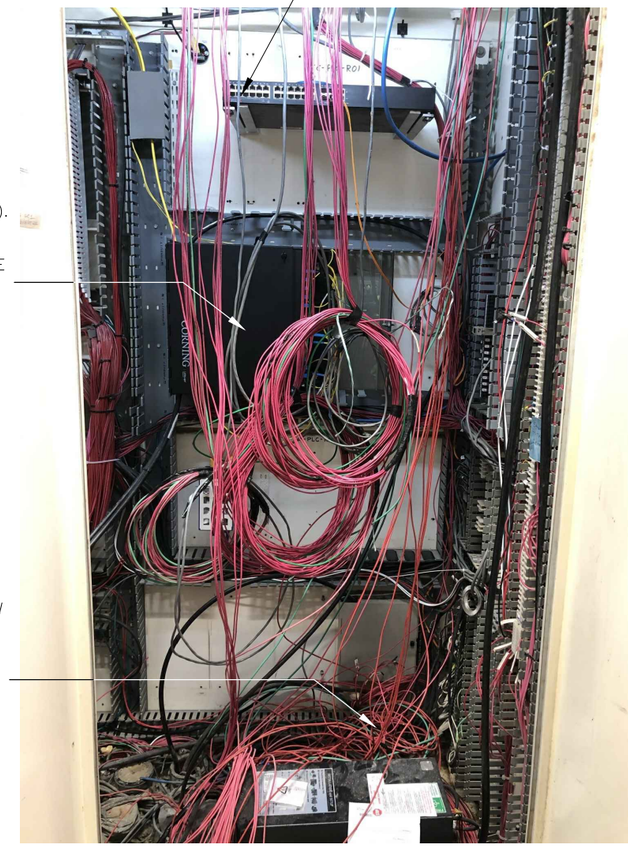

RIGHT SECTION

GENERAL NOTE

1. REPLACE LPU-1 WITH NEW PANEL. REFER TO SHEET I-8 FOR NEW PANEL REQUIREMENTS.
2. TRACE EACH FIELD WIRE AND IDENTIFY EACH FIELD WIRE'S FUNCTION. LABEL EACH FIELD WIRE WITH THE OWNER'S STANDARD WIRE TAG. RECONNECT THE WIRE TO THE NEW PANEL.
3. REMOVE ALL UNUSED FIELD WIRES.
4. PER THE COA'S ASBESTOS SURVEY REPORTS, THERE IS "NO ASBESTOS DETECTED" (NAD) IN THE AREAS OF THE BUILDING WHERE THE PROJECTED WORK WILL BE UPGRADED. NO ASBESTOS WAS DETECTED IN THE WINDOWS CAULK, CMU WALLS, PUMPS, ACCESSIBLE PUMPS GASKETS AND ALL ASSOCIATED PIPING AND INSULATION. NO FILL MATERIAL WAS DISCOVERED IN THE AREAS WHERE THE CMU WILL BE REPAIRED/REPLACED OR REMOVED.
5. PER THE COA'S LEAD BASE PAINT SURVEY REPORTS, THE LEAD BASE PAINT SAMPLES COLLECTED AND ANALYZED FROM THE PUMPING EQUIPMENT AND ASSOCIATED PIPES, THERMAL PIPE INSULATION; AND PAINTED METAL GAS LINES THAT RUNS ALONG THE INTERIOR WALLS NEAR THE CEILING ARE ALL BELOW THE US EPA HUD GUIDELINES FOR LEAD BASE PAINT. PROPER WORK PRACTICES AND PPE IS REQUIRED WHERE ANY CUTTING AND OR SAWING TAKES PLACE.

LPU-1 DEMOLITION PLAN

NTS

CP&Y, INC.
TBPE FIRM REGISTRATION NO. F-1741

CITY OF AUSTIN EST. 1839 FOUNDED

STATE OF TEXAS
LIANG LI
96785
LICENSED
PROFESSIONAL ENGINEER
05/06/21

NO.	REVISION	BY	DATE

VERIFY SCALE 0 1"
BAR IS ONE INCH ON ORIGINAL DRAWING. IF NOT ONE INCH ON THIS SHEET, ADJUST SCALE

CITY OF AUSTIN – AUSTIN WATER
HORNSBY BEND BMP CENTRIFUGES

LPU-1 DEMOLITION PLAN

Date: MAY 2021
Designed: K. TING WU
Drawn: K. TING WU
Reviewed: L. Li, P.E.
CP&Y Proj: AUST1600646.01

SHEET
I-7

REFERENCES: _CPY_Standard_Border_Base.dwg _Std ENVIRO SEALS
Jun 01, 2021 – 1:23pm C:\pwworking\cpy\pw_cpy\pvillarreal\d0795251\AUST1600646.01_8_I-7_CPY.dwg

GENERAL NOTE

1. PROVIDE NEW PANEL. PANEL SIZE SHALL BE 72"X80"X33" (WHD). REFER TO THE INSTRUMENT SPECIFICATION 17400 FOR PANEL REQUIREMENTS.
2. PROVIDE EACH FIBER OPTIC PATCH PANEL FIBER WIRING DIAGRAM IN THE PLC PANEL DRAWING.

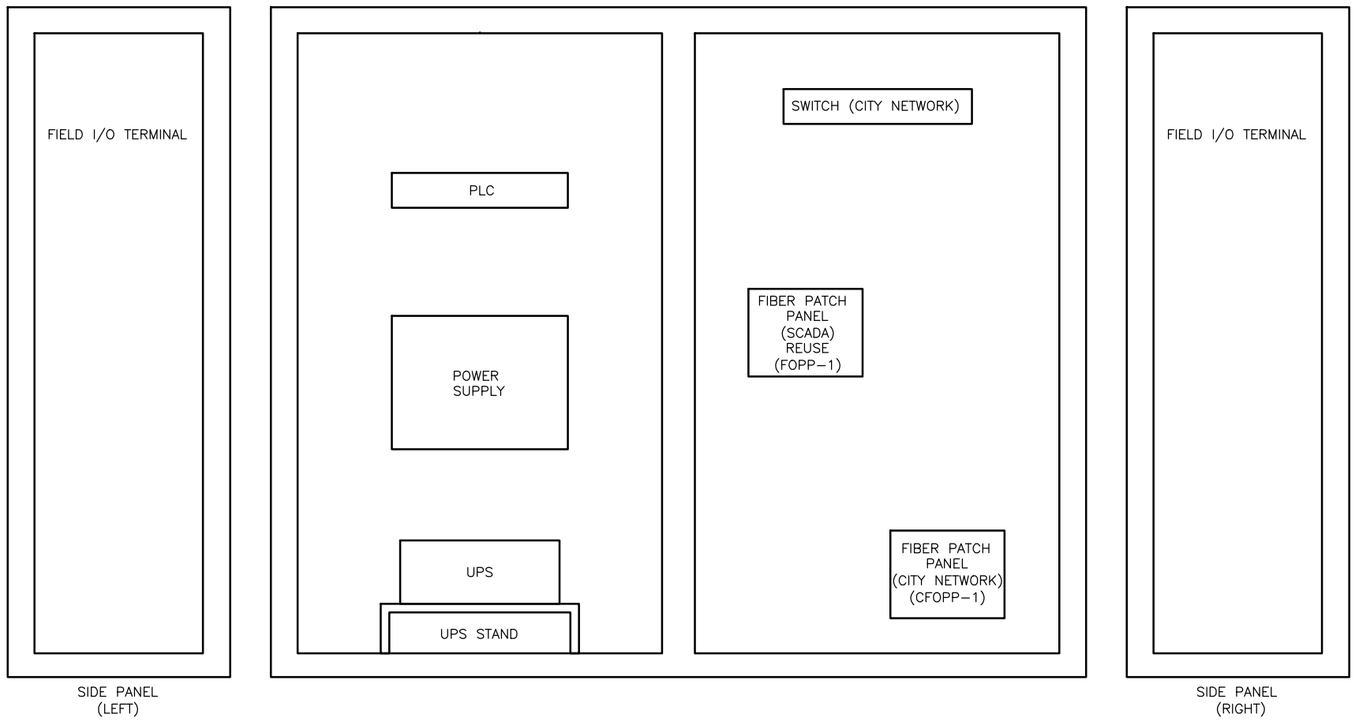

LPU-1 PLAN

NTS

CP&Y, INC.
TBPE FIRM REGISTRATION NO. F-1741

STATE OF TEXAS
LIANG LI
96785
LICENSED
PROFESSIONAL ENGINEER
05/26/21

NO.	REVISION	BY	DATE

VERIFY SCALE 0 1"
BAR IS ONE INCH ON ORIGINAL DRAWING. IF NOT ONE INCH ON THIS SHEET, ADJUST SCALE

CITY OF AUSTIN – AUSTIN WATER
HORNSBY BEND BMP CENTRIFUGES

LPU-1 PLAN

Date: MAY 2021
Designed: K. TING WU
Drawn: K. TING WU
Reviewed: L. LI, P.E.
CP&Y Proj: AUST1600646.01

SHEET
I-8

REFERENCES: _CPY_Standard_Border_Base.dwg _Std ENVIRO SEALS
May 21, 2021 – 11:45am C:\pwworking\cpy\pw_cpy\rcowley\d0795251\AUST1600646.01_8_I-8_CPY..dwg

NOTES:

1. ALL INSTALLATIONS WILL ADHERE TO ALL LOCAL, STATE AND NATIONAL CODES. PROVIDE CONDUIT SEAL AS REQUIRED BY THE NEC IN THE CLASSIFIED AREA.
2. ALL DETAILS ARE FOR GENERAL INSTALLATION. VERIFY ALL SITE CONDITIONS AT THE TIME OF INSTALLATION. SEE MANUFACTURER'S PRODUCT DATA FOR ADDITIONAL DETAILS.
3. PROVIDE 316 SS FITTINGS FOR ALL PROCESS CONNECTIONS.
4. PROVIDE LIQUID TYPE FLEXIBLE CONDUIT FOR ALL CONNECTIONS TO ALL TRANSMITTERS AND ASSOCIATED SENSORS. LIQUID TYPE FLEXIBLE CONDUIT SHALL BE LIMITED TO LENGTHS OF 6 FEET PER NEC REQUIREMENTS.
5. PROVIDE EPOXY TYPE ANCHORS WHERE APPLICABLE. EXPANSION OR WEDGE TYPE ANCHORS ARE NOT ACCEPTABLE FOR MASONRY OR CONCRETE.
6. INSTRUMENT TAG TO BE AFFIXED IN A LOCATION ADJACENT TO THE INSTRUMENT WITH EITHER SELF TAPPING STAINLESS STEEL SCREWS OR STAINLESS STEEL WIRE OR CHAIN.
7. ALL OUTSIDE INSTALLED ELECTRONIC DISPLAY UNIT AND INDICATION GAUGE SHALL BE INSTALLED FACING TOWARD NORTH TO AVOID DIRECT SUN LIGHT. THE ELECTRONIC DISPLAY UNIT SHALL BE INSTALLED WITH SUN SHIELD.

1 GENERAL NOTES

SCALE: NTS

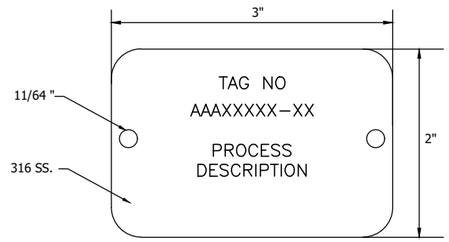

NOTES:

1. THE INSTRUMENT TAG IS TO HAVE THE PROCESS AREA, INSTRUMENT NUMBER, AND PROCESS DESCRIPTION LISTED ON THE TAG, PER AUSTIN WATER STANDARDS.
2. ALL TAG INFORMATION IS TO BE IN STANDARD ISA FORMAT.
3. THE INSTRUMENT TAG WILL BE SIZED IN A 3 X 2 RATIO. THE EXAMPLE IS 3 INCHES BY 2 INCHES. ALL LETTERING WILL BE 3/16" IN HEIGHT.
4. INSTRUMENT TAG TO BE AFFIXED IN A LOCATION ADJACENT TO THE INSTRUMENT WITH EITHER SELF TAPPING 316 STAINLESS STEEL SCREWS OR 316 STAINLESS STEEL WIRE OR CHAIN.

2 INSTRUMENT TAG

SCALE: NTS

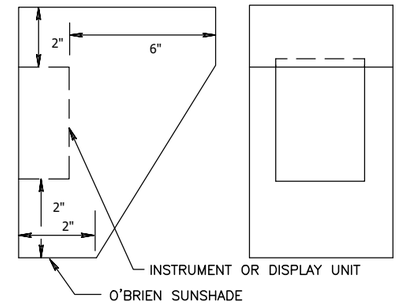

NOTES:

1. PROVIDE SUNSHADE FOR ALL INSTRUMENTS EXPOSED TO THE WEATHER.
2. THE DISPLAY SHALL BE MOUNTED FACING TOWARD NORTH.
3. MATERIAL SHALL BE ALUMINUM.

3 INSTRUMENT SUNSHADE

SCALE: NTS

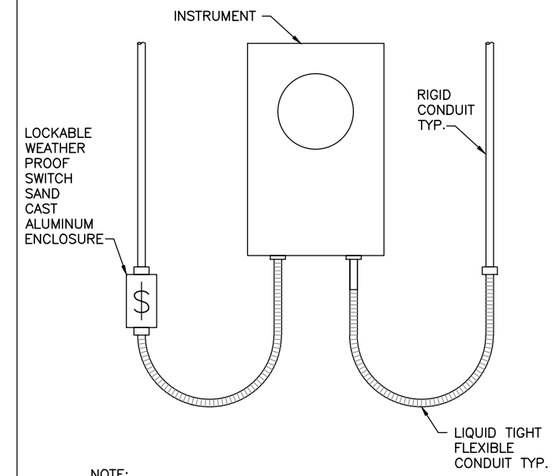

NOTE:

1. PROVIDE 3M 2123 CONDUIT SEAL TO SEAL OFF BOTH POWER AND ANALOG CONDUIT TO PREVENT GAS MIGRATION INTO INSTRUMENT AND PLC PANEL.

CLARIFICATION:
POWER IS SHOWN ON LEFT SIDE OF INSTRUMENT WITH A DISCONNECT AND ANALOG ON RIGHT SIDE WITH SURGE PROTECTOR.

4 INSTRUMENT WIRING DIAGRAM

SCALE: NTS

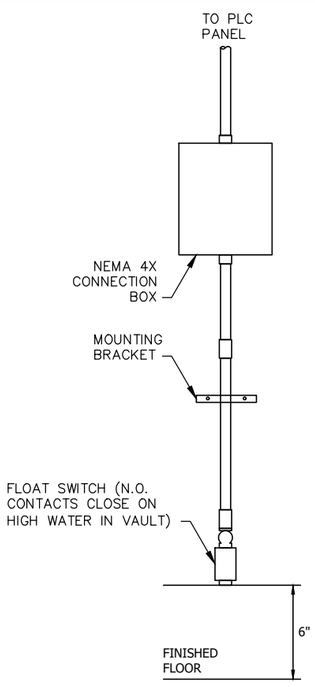

5 LEVEL SWITCH

SCALE:NTS

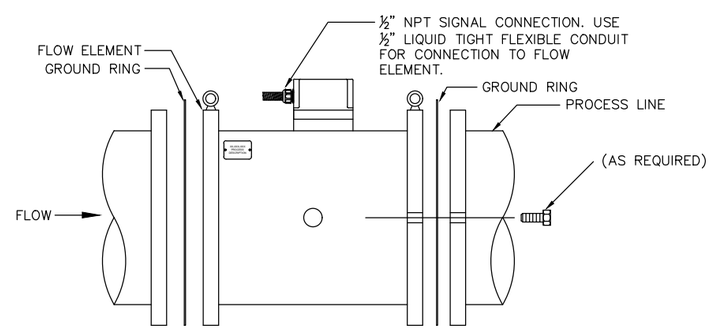

NOTE:

GROUNDING WIRE USING O–RING TERMINALS TO GROUND PLATES TO DEVICE.

6 ELECTROMAGNETIC FLOW TRANSMITTER

SCALE: NTS

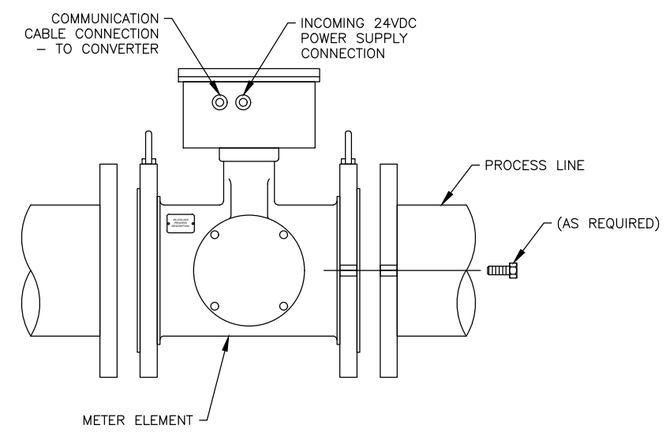

7 MICROWAVE DENSITY METER

SCALE: NTS

CP&Y, INC.
TBPE FIRM REGISTRATION NO. F-1741

STATE OF TEXAS
LIANG LI
96785
LICENSED
PROFESSIONAL ENGINEER
05/06/21

NO.	REVISION	BY	DATE

VERIFY SCALE 0 1"
BAR IS ONE INCH ON ORIGINAL DRAWING. IF NOT ONE INCH ON THIS SHEET, ADJUST SCALE

CITY OF AUSTIN – AUSTIN WATER
HORNSBY BEND BMP CENTRIFUGES

INSTRUMENTATION DETAILS I

Date: MAY 2021
Designed: K. TING WU
Drawn: K. TING WU
Reviewed: L. LI, P.E.
CP&Y Proj. AUST1600646.01

SHEET
I–9

REFERENCES: _CPY_Standard_Border_Base.dwg _Std ENVIRO SEALS
May 18, 2021 – 3:45pm C:\pwworking\cpy\kpw_cpy\kwu\d0795251\AUST1600646.01_8_I-9_CPY.dwg

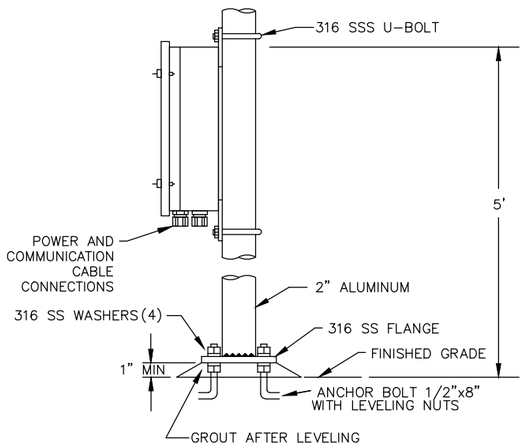

1 MICROWAVE DENSITY TRANSMITTER

SCALE: NTS

CP&Y, INC.
TBPE FIRM REGISTRATION NO. F-1741

CITY OF AUSTIN ESTD. FOUNDED

STATE OF TEXAS
LIANG LI
96785
LICENSED
PROFESSIONAL ENGINEER
05/06/21

NO.	REVISION	BY	DATE

VERIFY SCALE 0 1"
BAR IS ONE INCH ON ORIGINAL DRAWING. IF NOT ONE INCH ON THIS SHEET, ADJUST SCALE

CITY OF AUSTIN – AUSTIN WATER
HORNSBY BEND BMP CENTRIFUGES

INSTRUMENTATION DETAILS II

Date: MAY 2021
Designed: K. TING WU
Drawn: K. TING WU
Reviewed: L. Li, P.E.
CP&Y Proj. AUST1600646.01

SHEET
I–10

REFERENCES: _CPY_Standard_Border_Base.dwg _Std ENVIRO SEALS
May 18, 2021 – 3:45pm C:\pwworking\cpy\pw_cpy\kwu\d0795251\AUST1600646.01_8_I-10_CPY.dwg

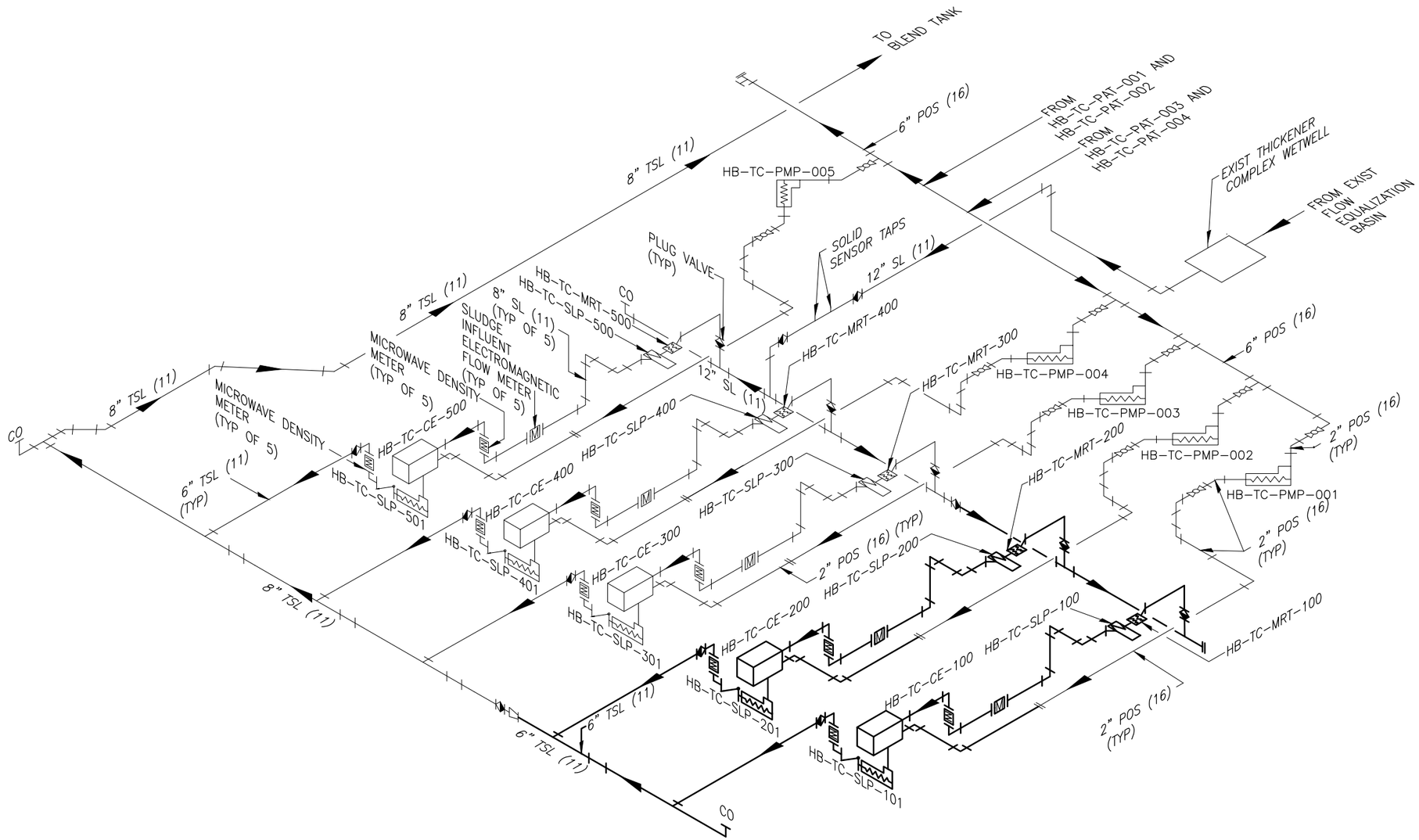

THICKENER COMPLEX PIPING SCHEMATIC

NOTE:

1. REFERENCE DRAWING NOT TO BE USED FOR CONSTRUCTION.

CP&Y, INC.
TBPE FIRM REGISTRATION NO. F-1741

CITY OF AUSTIN ESTD. FOUNDED 1

NO.	REVISION	BY	DATE

VERIFY SCALE BAR IS ONE INCH ON ORIGINAL DRAWING. IF NOT ONE INCH ON THIS SHEET, ADJUST SCALE
0 1"

CITY OF AUSTIN – AUSTIN WATER
HORNSBY BEND BMP CENTRIFUGES

THICKENER COMPLEX PIPING SCHEMATIC

Date:	APRIL 2021
Designed:	P. VILLARREAL
Drawn:	P. VILLARREAL
Reviewed:	L. WEBB
CP&Y Proj:	AUST1600646.01

SHEET
R–1

REFERENCES: AUST1600646.01 Border Base.dwg _Std ENVIRO SEALS
Apr 01, 2021 – 1:44pm C:\pwworking\cpy\pw_cpy\smedina\d0795251\AUST1600646.01_9_R-1_OPY.dwg

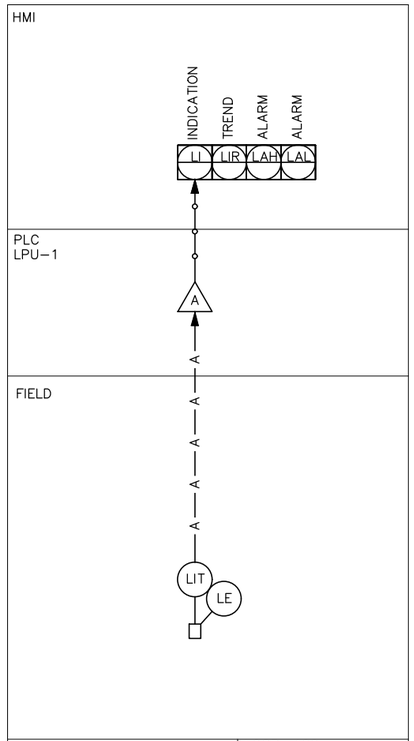

LOOP: 102

POLYMER TANK LEVEL

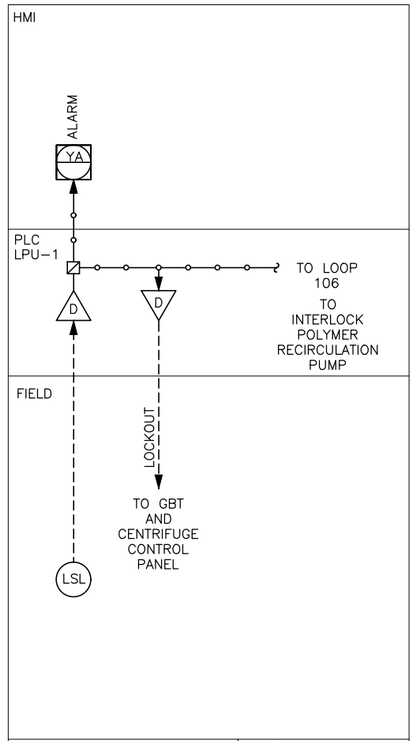

LOOP: 104

POLYMER STORAGE TANK LOW LEVEL

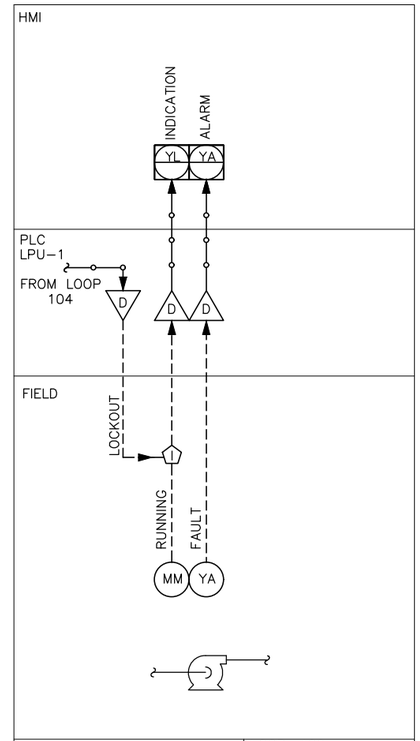

LOOP: 106

POLYMER RECIRCULATION PUMP

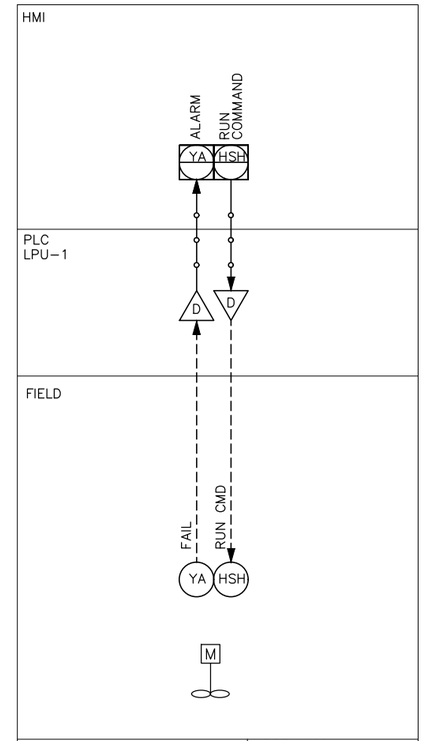

LOOP: 108

POLYMER MIX SYSTEM

NOTE:

1. EXISTING LOOP DIAGRAMS PROVIDED FOR REFERENCE ONLY.

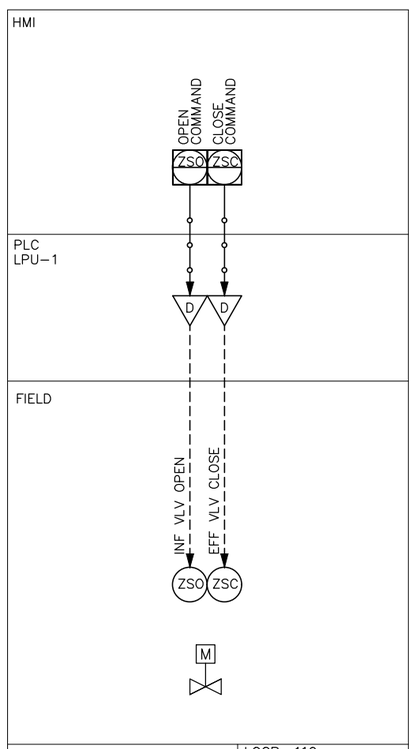

LOOP: 110

POLYMER AGE/MIX TANK VALVE

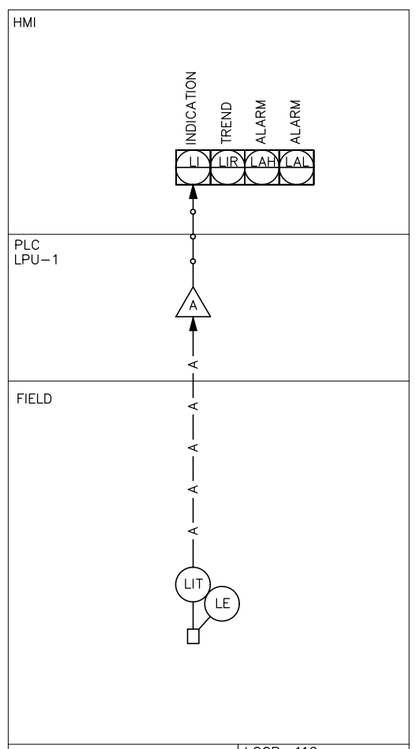

LOOP: 112

POLYMER AGE/MIX TANK LEVEL

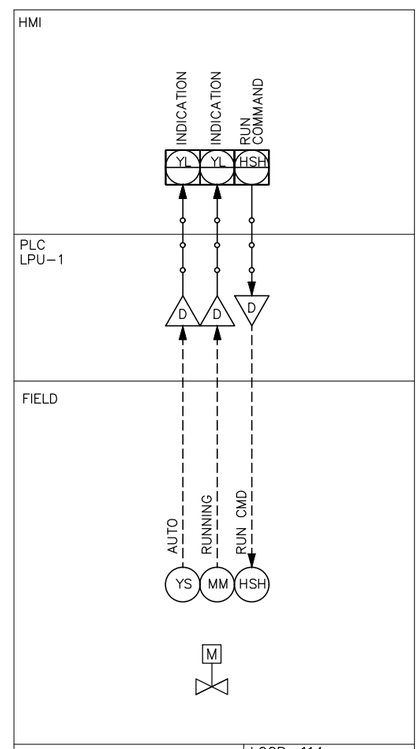

LOOP: 114

POLYMER AGE/MIX TANK AGITATOR

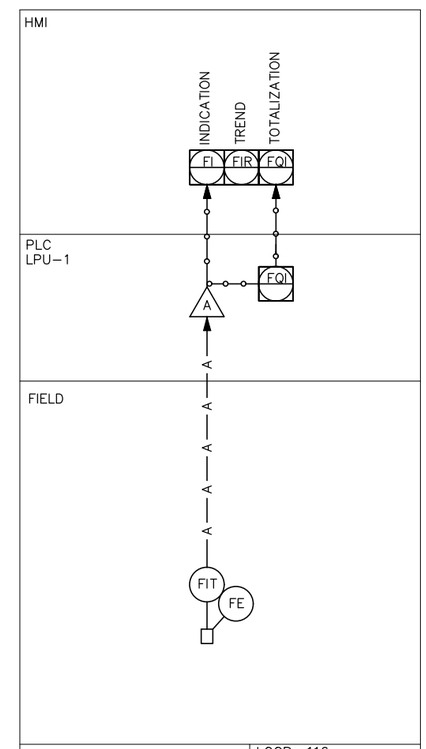

LOOP: 116

NPW FLOW

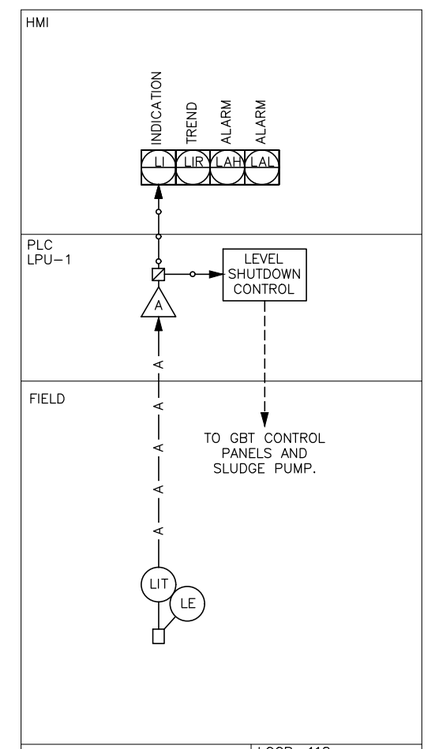

LOOP: 118

DISCHARGE PUMP TROUGH LEVEL

NOTE:

1. EXISTING LOOP DIAGRAMS PROVIDED FOR REFERENCE ONLY.

CP&Y, INC.
TBPE FIRM REGISTRATION NO. F-1741

CITY OF AUSTIN EST. 1839 FOUNDED

NO.	REVISION	BY	DATE

VERIFY SCALE 0 1"
BAR IS ONE INCH ON ORIGINAL DRAWING. IF NOT ONE INCH ON THIS SHEET, ADJUST SCALE

CITY OF AUSTIN – AUSTIN WATER
HORNSBY BEND BMP CENTRIFUGES

INSTRUMENTATION LOOP DIAGRAM I (EXISTING EQUIPMENT)

Date: APRIL 2021
Designed: C.TIDWELL
Drawn: C.TIDWELL
Reviewed: L.LI
CP&Y Proj: AUST1600646.01

SHEET
R-2

REFERENCES: _CPY_Standard_Border_Base.dwg Seal – COA.dwg _Std ENVIRO SEALS.dwg AUST14010_Border_Base
Apr 01, 2021 – 1:44pm C:\pwworking\cpy\pw_cpy\smedina\d0795251\AUST1600646.01_9_R-2_CPY.dwg

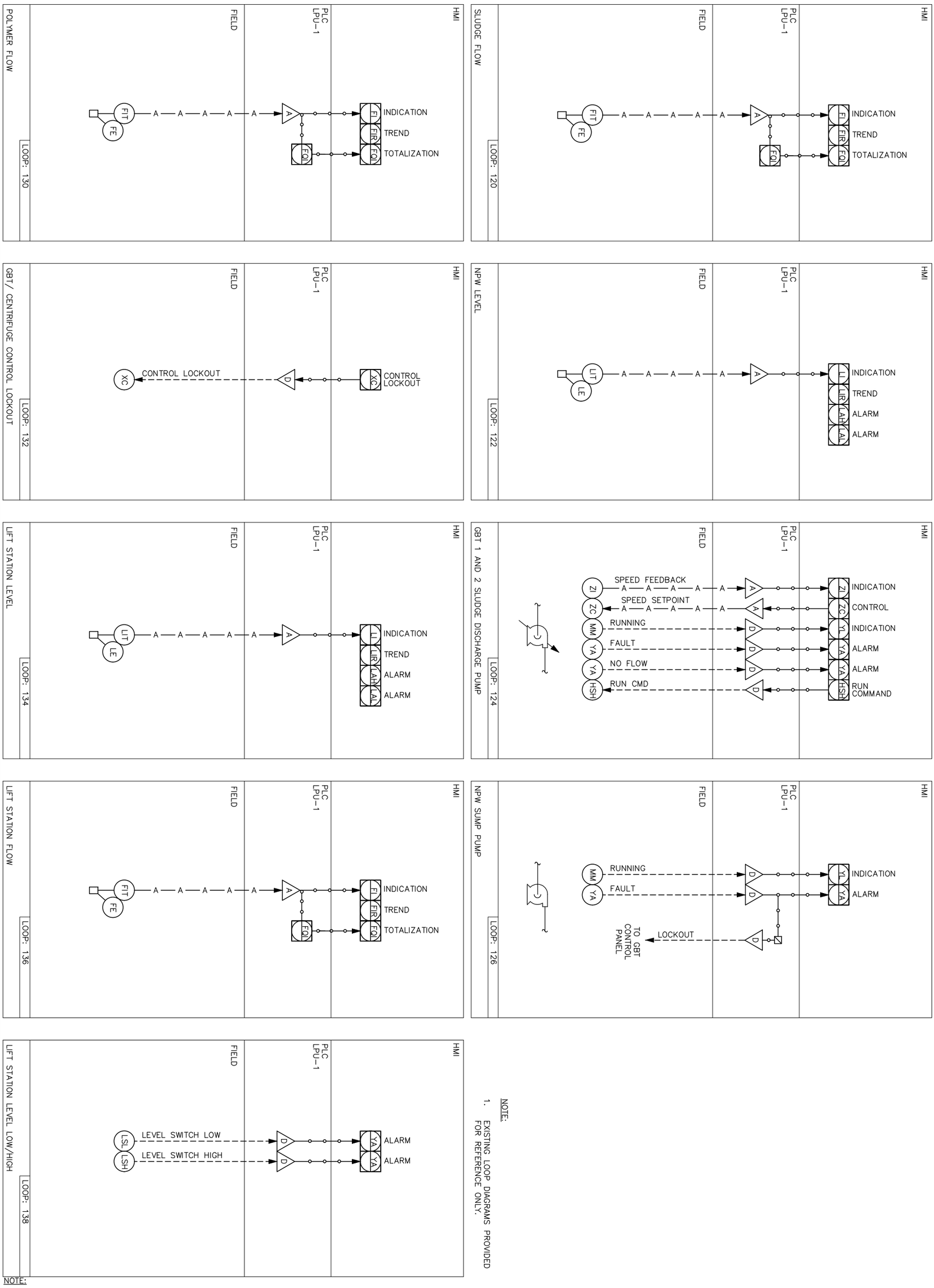

NOTE:

1. EXISTING LOOP DIAGRAMS PROVIDED FOR REFERENCE ONLY.

SHEET R-3	Date: APRIL 2021	CITY OF AUSTIN – AUSTIN WATER HORNSBY BEND BMP CENTRIFUGES
	Designed: C.TIDWELL	INSTRUMENTATION LOOP DIAGRAM II (EXISTING EQUIPMENT)
	Drawn: C.TIDWELL	
	Reviewed: L.LI	
	CP&Y Proj. AUST1600646.01	

NO.	REVISION	BY	DATE

VERIFY SCALE 0 1" BAR IS ONE INCH ON ORIGINAL DRAWING. IF NOT ONE INCH ON THIS SHEET, ADJUST SCALE

CITY OF AUSTIN FOUNDED 1839

CP&Y, INC.
TBPE FIRM REGISTRATION NO. #F-1741

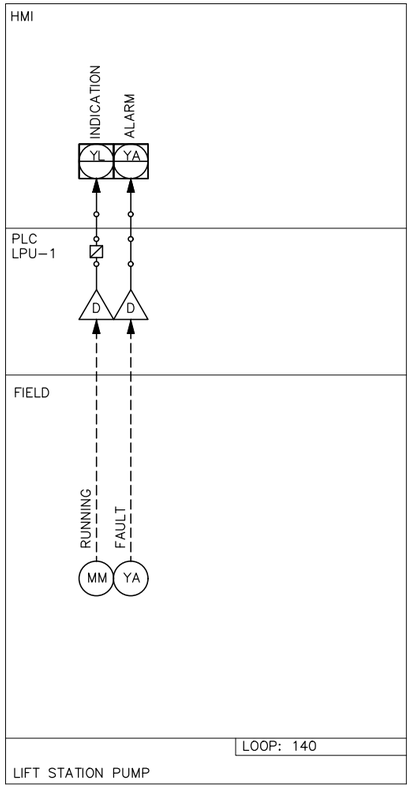

NOTE:

1. EXISTING LOOP DIAGRAMS PROVIDED FOR REFERENCE ONLY.

CP&Y, INC.
TBPE FIRM REGISTRATION NO. F-1741

NO.	REVISION	BY	DATE

VERIFY SCALE 0 1"
BAR IS ONE INCH ON ORIGINAL DRAWING. IF NOT ONE INCH ON THIS SHEET, ADJUST SCALE

CITY OF AUSTIN – AUSTIN WATER
HORNSBY BEND BMP CENTRIFUGES

INSTRUMENTATION LOOP DIAGRAM III
(EXISTING EQUIPMENT)

Date: APRIL 2021
Designed: C.TIDWELL
Drawn: C.TIDWELL
Reviewed: L.LI
CP&Y Proj. AUST1600646.01

SHEET
R-4

REFERENCES: AUST1600646.01 Border Base.dwg Std ENVIRO SEALS
Apr 01, 2021 – 1:44pm C:\pwworking\cpy\pw_cpy\smedina\d0795251\AUST1600646.01_9_R-4_CPY.dwg

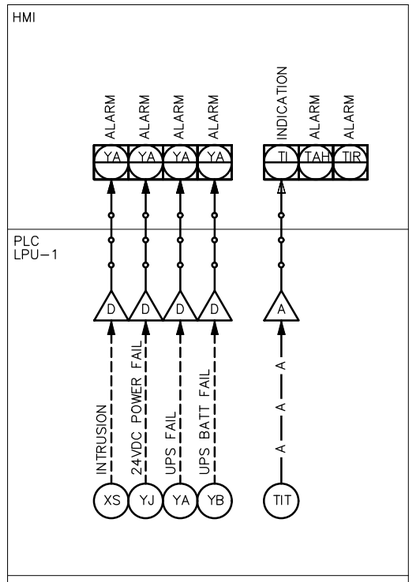

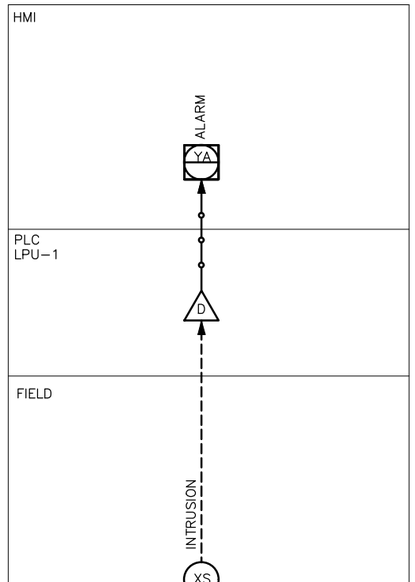

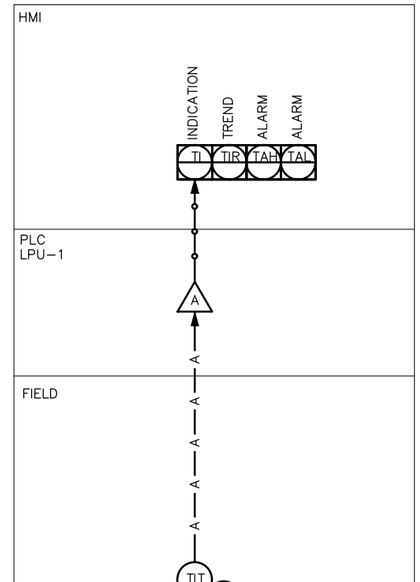

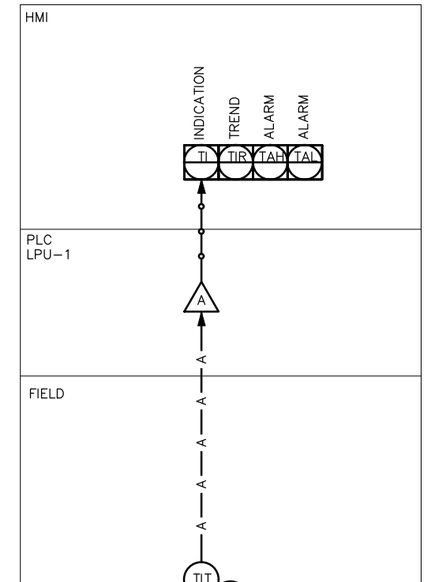

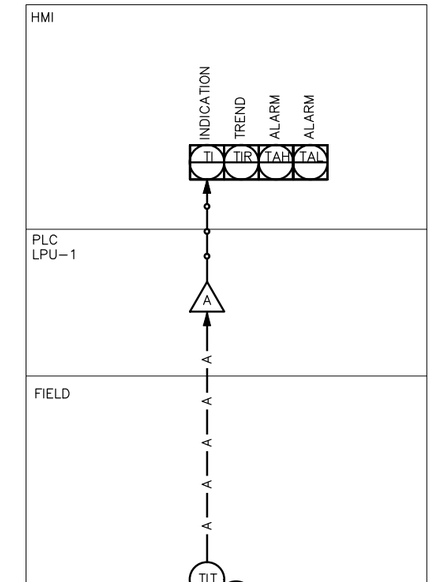

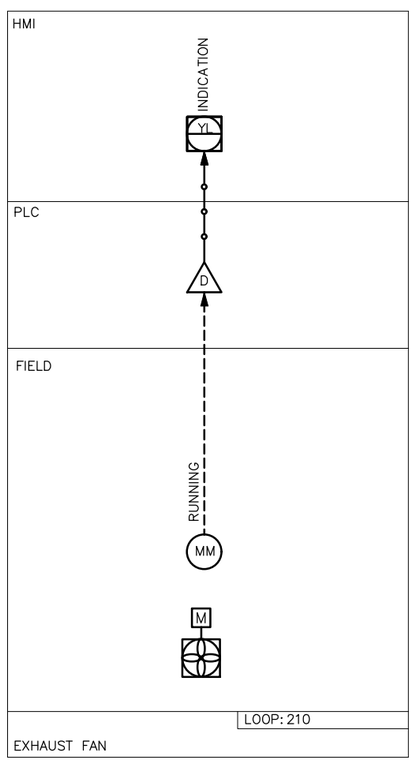

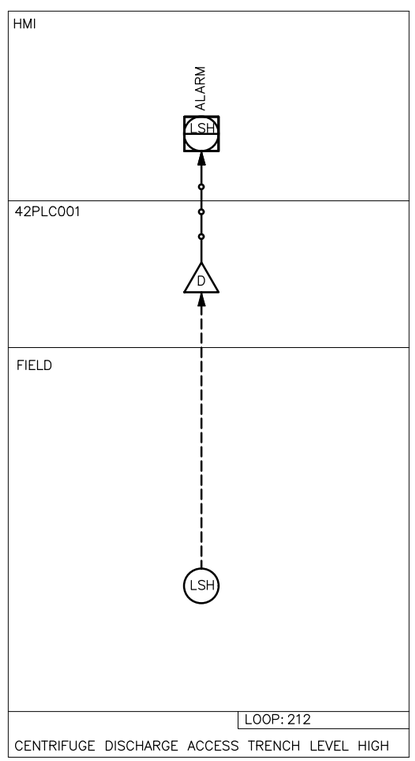

NOTE:

1. EXISTING LOOP DIAGRAMS PROVIDED FOR REFERENCE ONLY.

CP&Y, INC.
TBPE FIRM REGISTRATION NO. F-1741

CITY OF AUSTIN EST. 1839 FOUNDED

NO.	REVISION	BY	DATE

VERIFY SCALE 0 1"
BAR IS ONE INCH ON ORIGINAL DRAWING. IF NOT ONE INCH ON THIS SHEET, ADJUST SCALE

CITY OF AUSTIN – AUSTIN WATER
HORNSBY BEND BMP CENTRIFUGES

INSTRUMENTATION LOOP DIAGRAM IV (PROPOSED EQUIPMENT)

Date: APRIL 2021
Designed: L.Li
Drawn: G.MCCORMACK
Reviewed: L.Li
CP&Y Proj. AUST1600646.01

SHEET
R-5

REFERENCES: _Std ENVIRO SEALS.dwg AUST1600646.01 Border Base
Apr 01, 2021 – 1:44pm C:\pwworking\cpy\pw_cpy\smedina\d0795251\AUST1600646.01_9_R-5_CPY.dwg