CITY OF AUSTIN
Public Works Department

PROJECT MANUAL
Contract Documents and Technical Specifications

VOLUME 2 of 3

Davis WTP RWHEEI
High Service Pump Station Area Improvements

C.I.P. PROJECT NUMBER: 2015.017
SOLICITATION NUMBER: CLMC880

CITY OF AUSTIN
Public Works Department
P. O. Box 1088
Austin, TX 78704

October 2021

The City of Austin is committed to compliance with the Americans with Disabilities Act. Reasonable modifications and equal access to communications will be provided upon request.

THIS PAGE IS LEFT BLANK INTENTIONALLY

CITY OF AUSTIN
Public Works Department

PROJECT MANUAL
FOR
Davis WTP RWHEEI
High Service Pump Station Area Improvements

Ioan C. Chilarescu, Ph.D., P.E.
AECOM
Civil/Mechanical

Xiaohong He, Ph.D., P.E.
AECOM
Civil/Mechanical

Kenneth W. Hanks, P.E.
AECOM
Structural

Shant Harutunian, P.E.
Harutunian Engineering, Inc.
Electrical/I&C

Certifications

THIS PAGE IS LEFT BLANK INTENTIONALLY

	Date	Title

VOLUME 1 OF 3

	10/11/21	Table of Contents

BIDDING REQUIREMENTS, CONTRACT FORMS, & CONDITIONS OF THE CONTRACT

00020	09/21/21	Invitation for Bids
00100	09/21/21	Instructions to Bidders
00220	03/30/18	Geotechnical Data
00300L	09/01/21	Bid Form-Lump Sum
	04/03/20	Total Bid Form
00400	04/30/19	Statement of Bidder's Experience
00405	03/30/18	Certificate of Non-Suspension or Debarment
00410	09/17/18	Statement of Bidder's Safety Experience
00440	09/02/21	Prohibited Activities
00500	02/04/20	Agreement (SAMPLE)
00610	02/04/20	Performance Bond
00620	02/04/20	Payment Bond
00630	10/22/19	Non-Discrimination and Non-Retaliation Certificate
00631	03/30/18	Title VI Assurances Appendix A
00632	03/30/18	Title VI Assurances Appendix E
00650	06/08/18	Certificate of Insurance
00670	01/11/19	Sales Tax Exemption Certificate
00680	03/30/18	Non-Use of Asbestos Affidavit (Prior to Construction)
00681	03/30/18	Non-Use of Asbestos Affidavit (After Construction)
00700	12/04/20	General Conditions
00810	05/10/21	Supplemental General Conditions
00819	03/07/17	Security Requirements
00830	02/04/20	Wage Rates and Payroll Reporting
00830BC	07/19/21	Wage Rates Building Construction Trades
00840	09/01/21	Construction Training Program Requirements
00900	05/10/21	Addendum (SAMPLE)

SPECIFICATIONS

Division 1 - General Requirements

01010	08/28/20	Summary of Work
01020	03/30/18	Allowances
01025	09/17/18	Measurement and Payment
01040	06/09/20	Project Coordination
01045	05/21/21	Sequence of Construction
01045-1	05/21/21	Sequence of Construction for Blasting and Coating
01050	10/19/15	Grades Lines & Levels
01095	07/21/03	Reference Standards and Definitions
01200	08/09/12	Project Meetings

01300	01/11/19	Submittals
01310	09/02/14	Progress Schedules
01352	06/29/18	Sustainable Construction Requirements
01353	04/29/20	Construction Equipment Emissions Reduction Plan
01380	08/09/12	Construction Photography & Videos
01400	10/25/13	Construction Materials Testing
01445	05/21/21	Manufacturer's Field Services
01500	08/28/20	Temporary Facilities
01505	08/12/19	Construction and Demolition Waste Management
01510	06/29/18	Construction Indoor Air Quality Management
01550	08/09/12	Public Safety and Convenience
01600	10/29/13	General Equipment Requirements
01650	01/13/21	Equipment Testing and Facilities Startup
01656	12/05/13	Disinfection of Potable Water Facilities
01670	10/28/13	Training, Testing, and Facility Startup
01705	09/16/10	Health and Safety
01730	09/30/14	Operation and Maintenance Data
01900	03/12/12	Prohibition of Asbestos Containing Materials
01900a	06/05/06	Statement of Non-Inclusion of Asbestos Containing Material (E/A Prior to Design)
01900b	06/05/06	Statement of Non-Inclusion of Asbestos Containing Material (E/A After Design)

City Standard Technical Specifications
Series 100 – Earthwork

102S	08/20/07	Clearing and Grubbing
104S	09/26/12	Removing Portland Cement Concrete
111S	09/26/12	Excavation
130S	09/26/12	Borrow
132S	08/20/07	Embankment

Series 200 – Subgrade and Base Construction

201S	08/20/07	Subgrade Preparation
210S	02/24/10	Flexible Base
220S	02/24/10	Sprinkling for Dust Control
230S	08/20/07	Rolling (Flat Wheel)
232S	08/20/07	Rolling (Pneumatic Tire)
236S	08/20/07	Proof Rolling

Series 300 – Street Surface Courses

301S	08/20/07	Asphalts, Oils, and Emulsions
302S	09/26/12	Aggregate for Surface Treatments
306S	02/24/10	Prime Coat
307S	02/24/10	Tack Coat
313S	02/24/10	Cleaning or Sealing Joints and Cracks (Asphalt Concrete)

340S	09/26/12	Hot Mix Asphalt Concrete Pavement
360S	09/26/12	Concrete Pavements

Series 400 – Concrete Structures and Miscellaneous Concrete

401S	09/26/12	Structural Excavation and Backfill
402S	11/13/07	Controlled Low Strength Material
403S	09/26/12	Concrete for Structures
405S	11/13/07	Concrete Admixtures
406S	09/26/12	Reinforcing Steel
408S	11/13/07	Concrete Joint Materials
409S	11/13/07	Membrane Curing
410S	09/26/12	Concrete Structures
411S	11/13/07	Surface Finishes for Concrete
413S	11/13/07	Cleaning and/or Sealing Joints and Cracks (PCC)
430S	11/15/11	Concrete Curb and Gutter

Series 500 – Pipe and Appurtenances

503S	02/17/00	Frames, Grates, Rings, and Covers
506	03/15/11	Manholes
509S	09/26/12	Excavation Safety Systems

Series 600 – Environmental Enhancement

601S	11/14/16	Salvaging and Placing Topsoil
604S	01/04/16	Seeding for Erosion Control
606S	06/21/07	Fertilizer
610S	12/07/18	Preservation of Trees and Other Vegetation
620S	01/04/16	Filter Fabric
639S	08/18/10	Rock Berm
642S	09/01/11	Silt Fence
648S	08/18/10	Mulch Sock

Series 700 – Incidental Construction

700S	09/26/12	Mobilization
701S	09/26/12	Fencing

Series 800 – Urban Transportation

802S	09/26/12	Project Signs

Special Provisions to City Standard Technical Specifications

SP401S	01/17/19	Special Provisions to Structural Excavation and Backfill
SP403S	01/17/19	Special Provisions to Concrete for Structures
SP406S	01/17/19	Special Provisions to Reinforcing Steel
SP410S	06/23/20	Special Provisions to Concrete Structures
SP506	11/21/13	Special Provisions to Manholes
SP1070	05/12/21	Austin Water Utility Facility Security Procedure for Contractors

VOLUME 2 OF 3

Special Specifications

Division 2 – Site Construction

02687	11/01/13	Testing of Installed Piping Systems
02770	11/01/13	Construction of Underground Lines

Division 3 – Concrete
Not Used

Division 4- Masonry
Not Used

Division 5 – Metals

05010	11/21/13	Metals for Structures
05050	09/30/14	Welding
05120	04/20/18	Structural Steel
05210	04/20/18	Steel Joists
05310	04/20/18	Steel Deck
05500	01/07/19	Metal Fabrications
05511	01/07/19	Metal Stairs
05520	01/07/19	Aluminum Handrails
05530	05/17/18	Access Hatches

Division 6 – Wood and Plastics

06100	03/08/13	Rough Carpentry

Division 7 – Thermal and Moisture Protection

07542A	12/18/18	Polyvinyl-Chloride Roofing over Concrete Deck
07542B	12/18/18	Polyvinyl-Chloride Roofing over Steel Deck
07920	12/03/13	Joint Sealants

Division 8 – Doors and Windows

08110	06/08/20	Steel Doors and Frames
08710	12/03/13	Door Hardware

Division 9 – Finishes

09902	07/24/13	Paint and Protective Coatings

Division 10 – Specialties

10431	12/03/13	Signage

Division 11 – Equipment

11210	05/20/21	Rehabilitation and Startup of Horizontal Split Case Pumps

Division 12 – Furnishings
Not Used

Division 13 – Special Construction

13390	01/03/19	Packaged Control Systems

Division 14 – Conveying Systems

Not Used

Division 15 – Mechanical

15061	06/13/21	Pipe Supports
15062	06/13/13	Ductile Iron Pipe and Cast Iron and Ductile Iron Fittings
15063	06/13/13	Installation of Ductile Iron Plant Piping
15075	07/25/13	Mechanical Identification
15100	09/04/14	Valves
15114	09/20/21	Check Valves
15115	01/07/19	Gate Valves
15116	09/20/21	Butterfly Valves
15117	02/17/20	Rehabilitation of Pump Control Valves
15118	05/17/18	Pressure Reducing and Pressure Relief Valves
15176	09/20/21	Bladder-Type Hydropneumatic Surge Suppression System
15815	08/01/15	Metal Ductwork
15820	08/01/15	Duct Accessories
15860	05/14/18	Fans

Division 16 – Electrical

16150	01/03/19	Raceways, Fittings, and Supports
16200	01/03/19	Wiring (600 Volts and Below)
16250	01/03/19	Boxes and Cabinets
16300	01/03/19	Wiring Devices
16550	01/03/19	Grounding
16600	01/03/19	Disconnect Switches and Enclosed Circuit Breakers
16800	01/03/19	Calibration, Testing and Settings
16825	05/19/21	Motor Rehabilitation

Division 17 – Instrumentation and Controls

17100	01/03/19	Process Instrumentation and Control Systems Pics
17200	01/03/19	Instrumentation & Control Cabinets & Associated Equipment
17600	01/03/19	Distributed Control System

VOLUME 3 of 3

10/04/21 MBE/WBE Procurement Program Package

END

THIS PAGE IS LEFT BLANK INTENTIONALLY

SECTION 02687

TESTING OF INSTALLED PIPING SYSTEMS

PART 1 GENERAL

1.01 SUMMARY

A. Scope: Furnish all labor, materials, tools, and equipment, and perform all operations in connection with testing of installed piping systems and appurtenances.

B. PLANS show pipe sizes, arrangements, working pressures, and test pressures. When PLANS lack such information, minimum test pressures specified in Attachment "B" herein to be used.

1.02 RELATED REQUIREMENTS

A. Piping materials and installation requirement as called for on PLANS or specified elsewhere in this or other TECHNICAL SPECIFICATIONS Sections.

1.03 – 1.11 (NOT USED)

PART 2 PRODUCTS (NOT USED)

PART 3 EXECUTION

3.01 GENERAL

A. All testing to be conducted in the presence of ENGINEER and/or local reviewing authority. A minimum of 24 hours notice is required prior to commencing tests, but a 72 hours notice is preferred. Length of piping and sections included in tests to meet with approval of ENGINEER.

B. Water for Testing
   1. Except for potable water lines, non-potable water may be used for testing.
   2. CONTRACTOR is responsible for conveying and ultimate disposal of water used for testing.
   3. If potable water is used for testing CONTRACTOR is responsible for metering.
   4. Reference the General Conditions for the disposition of costs associated with the purchase of potable water or non-potable water.
   5. All costs associated with re-testing to be borne by CONTRACTOR.

C. Furnish all taps, fittings, blind flanges, bulkheads, bracing systems, plugs, and other devices for use in filling, flushing, and testing.

D. Piping installed behind walls, under pavement, or under structures to be tested prior to construction of same.

E. Thrust Blocks: No testing is to be performed until the installation of all thrust blocking has been completed and given sufficient time to cure. Testing is not to begin until a minimum of 36 hours has elapsed since the last thrust block has been poured when utilizing high, early strength concrete for thrust blocking. A minimum of 7 days of thrust block curing is required when utilizing standard concrete.

F. Pipes to be free of dirt, sand, gravel, or other foreign material prior to testing.

G. Protect all valves and appurtenances, in or attached to piping system, from damage due to testing procedures. Any damage resulting from testing procedures to be repaired, and all costs to be borne by CONTRACTOR.

H. When testing absorbent pipe materials, such as concrete, fill the system with water and allow to stand for 24 hours prior to conducting test. Air testing is not to be used with these materials.

I. All fittings, hydrants, and appurtenances to be properly braced and harnessed before the testing commences. Thrust restraining devices which are part of the piping system to be tested at the test pressure.

J. Plug pipe outlets with test plugs, blind flanges or bulkheads. Brace valves, fittings, and plugs securely to prevent blowouts.

K. Furnish adequate venting facilities in system to allow air to escape when filling system for hydrostatic testing.

L. Pressurizing equipment to include a regulator set to avoid over-pressurization of test lines.

M. CONTRACTOR is solely responsible for implementing and adhering to recognized safety procedures to prevent injury to personnel and/or damage to property.

N. For underground lines, backfill to a sufficient depth of cover prior to testing to prevent shifting of the pipe due to pressure.

O. CONTRACTOR to determine groundwater level by installing groundwater gauges in manholes prior to conducting low pressure air tests or testing underground pipes for infiltration and/or exfiltration. Gauges to consist of a rigid section of minimum 1/2-inch diameter pipe, capped and inserted horizontally in manhole wall as near as possible to top of sewer, sealed so as to be watertight. Immediately prior to performance of test, groundwater back pressure to be determined by removing pipe cap, blowing air through pipe into ground to clean pipe, then connecting a clear plastic tube to pipe. Clear plastic tube to be held vertically and measurement of height (in feet) of water over invert of pipe to be taken after water has stopped rising. Upon completion of air test, remove groundwater gauge from wall of manhole and permanently close opening with a nonshrinking, noncorrosive grout.

P. Test pressure is not to exceed rated pressure of valves installed in line.

3.02 HYDROSTATIC TESTING – HIGH HEAD (HH)

A. Test Pressure: Unless otherwise specified in the test schedule herein or the piping schedule on the PLANS, the following pressure restrictions to apply:

1. Test Pressure
   a. 150% of the working pressure at the point of testing; or
   b. 125% of the working pressure at the highest point along the test section.
   c. In the event of a conflict between a. and b. above, the greater value is to apply.
2. For surcharged piping systems, working pressure is defined as the difference in elevation between the lowest point in the piping system and the maximum water surface elevation in the hydraulic structure immediately upstream of the piping system.
3. Test pressure is not to vary by more than plus or minus 5 psi.

B. Duration of Pressure Test: Exposed joints to be tested for not less than 2 hours with no allowable leakage. Covered joints to be tested for a minimum of 6 hours. If leakage at the end of the 6-hour period exceeds the allowable by less than 25%, test to continue for not less than 18 additional hours. For test durations greater than 2 hours, furnish a calibrated pressure recorder to record pressure during test. Reference Paragraph 3.10 for allowable leakage.

C. Pressurization: Each valved section of pipe to be filled with water slowly and the specified test pressure, based on the elevation of the highest point of the line or section under test and corrected to the elevation of the test gauge, to be applied by means of a pump connected to the pipe. Furnish pump, pipe connections, and necessary apparatus, gauge, volumetric measuring device and meters. Furnish necessary labor and assistance for conducting test, all subject to approval by ENGINEER.

D. Air Removal: Before applying the specified test pressure, air to be expelled completely from the pipe, valves, and hydrants. If permanent air vents are not located at all high points, CONTRACTOR to install corporation cocks at such points so that the air can be expelled as the line is filled with water. After all the air has been expelled, the corporation cocks to be closed and the test pressure applied. At the conclusion of the pressure test, the corporation cocks to be removed and plugged, or left in place at the discretion of the OWNER.

E. Examination: All exposed pipe, fittings, valves, hydrants, and joints to be examined carefully during the test. Any damage or defective pipe, fittings, valves, or hydrants that are discovered following the pressure test to be repaired or replaced with sound material and the test repeated until the leakage is within the specified allowance.

3.03 TESTING GRAVITY FLOW PIPING – (GR)

A. Test gravity flow piping indicated with “GR” in the Piping Schedule, as follows:
   1. Unless specified otherwise, subject gravity flow piping to the following tests:
      a. Alignment and grade.
      b. For plastic piping test for deflection.
      c. Visible leaks and pressure with maximum leakage allowance, except for storm drains and culverts.
   2. Inspect piping for visible leaks before backfilling.
   3. Provide temporary restraints when needed to prevent movement of piping.
   4. Pressure test piping as required for hydrostatic test, with maximum leakage allowance after backfilling.
   5. With the lower end plugged, fill piping slowly with water while allowing air to escape from high points. Keep piping for at least 24 hours:
      a. Examine piping for visible leaks. Consider examination complete when no visible leaks are observed.
      b. Maintain piping with water, or allow a new water absorption period of 24 hours for the pressure test with maximum leakage allowance.
      c. After successful completion of the test for visible leaks and after the piping has been restrained and backfilled, subject piping to the test pressure for minimum of 4 hours while accurately measuring the volume of water added to maintain the test pressure:
         (1) Consider the test complete when leakage is equal to or less than the following maximum leakage allowances:
            (a) For concrete piping with rubber gasket joints: 80 gallons per day per inch of diameter per mile of piping under test.

3.04 LOW PRESSURE AIR TEST (LPA)

A. Equipment: Equipment used to meet following minimum requirements.

1. Pneumatic plugs to have a sealing length equal to or greater than diameter of pipe tested.
2. Pneumatic plugs to resist internal test pressures without requiring external bracing or blocking.
3. One of the pneumatic plugs to have inlet tap or other provision for connecting air supply to introduce low pressure air into the line for testing.
4. All air used shall pass through a single control panel:
   a. From control panel to pneumatic plugs for inflation.
   b. From control panel to a sealed line for introducing low pressure air.
   c. From sealed line to control panel for continuous monitoring of air pressure in sealed line.
5. Air supply system to have necessary valves and gauges to control rate at which air enters test section and for reading test results.
6. Pressure gauges to have minimum graduations of 0.1 psi, an accuracy of plus or minus 0.04 psi, and a minimum dial diameter of 3½ inches.

B. Procedure

1. Isolate test section by installing air-tight plugs. Plug ends of branches, laterals, and wyes which are to be included in test section. Brace all plugs to prevent slippage and blow-out.
2. CONTRACTOR to carefully observe safety precautions during air testing to prevent injury to personnel from plugs blowing out. No one allowed in manholes during test.
3. Inflate pneumatic plugs to 25 psig.
4. Slowly introduce low pressure air into sealed line until pressure reaches test pressure plus 0.5 psig.
   a. Test pressure to be 3.5 psig.
   b. The maximum pressure allowed under any condition in air testing to be 10 psig. The maximum groundwater level for air testing is 13 feet above top of pipe.
5. Allow a minimum of 2 minutes for temperature and pressure of the air to stabilize. Add air as required to maintain internal pressure specified plus or minus 0.5 psig.
6. When internal air pressure has stabilized and is at or above test pressure, disconnect air supply and commence test. Utilizing a stopwatch, record period of time required for pressure to drop 1.0 psig from starting pressure. Following table lists minimum test times for various pipe sizes. If time for pressure to decrease 1.0 psig is less than value in table, then system has failed.

Pipe Size	Minimum Test Time	
	Minutes	Seconds
6″	2	50
8″	3	56
10″	4	43
12″	5	40
15″	7	5
18″	8	30
21″	9	55
24″	11	20
27″	12	45
30″	14	10
36″	17	0
42″	19	50
48″	22	36
54″	25	16
60″	27	47

For other sizes, consult with ENGINEER.

7. Test may be discontinued when prescribed minimum test time has been reached, even though 1.0 psig pressure drop has not occurred.
8. Release air from pipe slowly and remove plugs at conclusion of test.

3.05 HIGH PRESSURE AIR TESTING (HPA)

A. Purge line to be tested with water or high velocity air as appropriate to system being tested.

B. Unless otherwise specified, perform two-hour pressure test at 150 psig using dry, oil free air. Unless otherwise specified, no leaks will be allowed.

C. Test joints with soapy water solution for leaks.

3.06 EXFILTRATION TESTING (ET)

A. General: Take precautions required to prevent damage to lines and appurtenances being tested. Repair any damage resulting from test at CONTRACTOR's expense. Conduct test in presence of ENGINEER.

B. Preparation: Seal ends of section being tested with water-tight plugs. Fill section with water 24 hours prior to start of test. Vent line during filling so that no air is trapped in line. Leave outlets of stacks, inlets, and service lines exposed and unplugged until after exfiltration test has been made. Outlets terminating below level of test water surface to be temporarily extended upward by installing additional lengths of pipe or by plugging. After completion of satisfactory test, remove lengths of pipe added for test.

C. Duration of Test: Test for at least 2 hours with minimum head of 4 feet measured above top crown, inside pipe at upper end of section being tested.

D. Allowable Leakage: Allowable leakage or exfiltration in any individual section or entire sewer line under construction is defined in Paragraph 3.08. Remove and replace or make approved corrective repairs to any section or line which has leakage or exfiltration that exceeds above amount. Repair any individual leaks that may appear whether or not overall section meets leakage requirements. For this purpose, any steady stream will be considered a leak, while a drip will not. Individual leaks ordinarily will be revealed by looking through sewer with a light while groundwater level is over sewer, during backfill operations, or immediately after water from exfiltration tests is emptied from sewer line. Settlement in backfill during exfiltration tests will be taken and an indication of leakage.

E. Measurement of Leakage: Measure leakage or exfiltration during test period by adding measured quantities of water to maintain water level in test structure. Quantity of water added to maintain water level is amount of leakage or exfiltration.

F. Retest: Sewers failing to meet requirements of leakage test to be tested again for leakage after repair by CONTRACTOR. No sewer will be accepted until leakage is less than allowable.

3.07 INFILTRATION TESTING (IT)

A. General: Infiltration tests will be allowed only when the water table gauges determine the groundwater level to be 2 feet or more above the highest point of the pipeline section being tested. CONTRACTOR to furnish all equipment required for testing. Take precautions to prevent damage to lines and appurtenances being tested. Repair any damage resulting from test at CONTRACTOR's expense. Conduct test in presence of ENGINEER.

B. Preparation: Seal all service laterals, stubs, fittings, and all appurtenances of the upstream end of section being tested with watertight plug(s). Install approved 90-degree, V-notch weir in lower manhole of section to be tested. Weir to be of sufficient size to accommodate flow. Install weir with watertight bulkhead to avoid leakage around bulkhead and weir. Notch of weir to be below centerline of line to be tested and be in the upstream end of manhole or joint of pipe. Pump water from downstream of weir so that water will have a free fall over weir at all times.

C. Duration of Test: Test for 4 hours after downstream sewer is pumped down. Take measurements of head on weir at 30-minute intervals. Volume of infiltration to be calculated by use of standard V-notch weir tables for rate of flow and time of tests.

D. Allowable Leakage: Allowable leakage or infiltration in any individual section or entire sewer line under construction is defined in Paragraph 3.08. Remove and replace or make approved corrective repairs to any section or line which has leakage or infiltration that exceeds above amount. Repair any individual leaks that may appear whether or not overall section meets leakage requirements. For this purpose, any steady stream will be considered a leak, while a drip will not. Individual leaks ordinarily will be revealed by looking through sewer with a light while groundwater level is over sewer, during water tamping operations.

E. Retest: Sewers failing to meet requirements of leakage test will, after repair by CONTRACTOR, be tested again for leakage. No sewer accepted until leakage is less than allowable.

3.08 ALLOWABLE LEAKAGE FOR NONPRESSURE PIPELINES

The allowable leakage (exfiltration or infiltration) for non-pressure pipelines is not to exceed the following:

Type of Pipe	Leakage (gallons per 24 hours per inch of diameter per 1,000 feet of pipe)
Ductile iron - mechanical or push-on joints	10
Polyvinyl chloride, thermal plastic or fiberglass with solvent-cemented joints, or centrifugally cast fiberglass pipe and fittings	10
Concrete with rubber joints	20
Concrete with steel and rubber joints	10
Clay with rubber gasket joints	20
Cast iron soil pipe:	
1. Drains and Vents	0
2. Sewer Laterals	*
All piping inside structures	0

* The same allowable as pipe to which it is connected.

Regardless of the above allowable leakage, any visible leaks detected to be permanently stopped.

3.09 PIPELINE SETTLEMENT TESTING

A. TV Inspection

1. During infiltration test or after exfiltration test, pipe to be TV inspected for possible settlement. When air testing has been used, run water through pipe to permit meaningful observations. Any pipe settlement which causes ponding of water in pipe is an indication of system failure.
2. TV inspection required on all sanitary sewers greater than 30 inches in diameter and all sewers installed with curved alignment.

B. Mandrel Testing: All plastic piping materials used for gravity sewers to be subjected to a 95% mandrel test. Mandrel testing to be completed no sooner than four weeks after backfilling has been completed. A Go-No-Go deflection testing mandrel with a minimum of nine runners to be used for testing. Mandrel to be furnished with proving ring. Dimensions of the mandrel for SDR-26 PVC, to be as shown in Attachment "A" to this Section and as required by City of Austin, AWU SPL WW-227 or 227A. For other wall thicknesses, consult ENGINEER. Testing to be as follows:

1. Completely flush line and clean pipe of debris.
2. Install pull rope in section to be tested.
3. Attach pull rope and retrieval rope to mandrel.
4. Insert mandrel in pipe. Remove slack from pull rope and place tape marker on rope at end of pipe where mandrel will exit. Tape marker to be used to determine mandrel location in line.
5. Using guide pulleys, pull mandrel through line. Use tape marker to determine location of over-deflected sections.
6. All pipe sections failing to pass the mandrel to be removed and reinstalled.
7. Repeat testing until system passes.

3.10 LEAKAGE TESTING FOR PRESSURE PIPELINES

A. Leakage test to be conducted concurrently with hydrostatic pressure tests.

B. Leakage Defined: Leakage is defined as the quantity of water that must be supplied into pipe, or any valved section thereof, to maintain pressure within specified test pressure after air in pipeline has been expelled and pipe has been filled with water and brought to test pressure.

C. Determine rate of leakage at 15-minute intervals by means of volumetric measurement of makeup water added to maintain test pressure. The test to proceed until the rate of leakage has stabilized or is decreasing below an allowable value, for 3 consecutive 15-minute intervals. After this, test pressure to be maintained for at least another 15 minutes.

D. The allowable leakage for pressure pipelines including surcharged gravity lines not to exceed the following in gallons per 24 hours per inch of diameter per mile of pipe:

Type of Pipe	**Leakage (gallons per 24 hours per inch of diameter per mile of pipe)**
Ductile iron	10
Polyvinyl chloride, thermal plastic or fiberglass with rubber joints	10
Polyvinyl chloride, thermal plastic or fiberglass with solvent-cemented joints, or centrifugally cast fiberglass pipe and fittings	0
Concrete with steel and rubber joints	10
Steel with welded joints	0
Steel with harnessed joints	10
Wrought steel	0
Copper	0
All piping inside structures	0

Regardless of the above allowable leakage, any visible leaks detected to be permanently stopped.

3.11 TESTING OF PLUMBING SYSTEMS

A. Potable Water Lines: Hydrostatically test at 100 psig; maintain pressure for one hour; no leaks allowed.

B. Test vertical soil and waste vents as soon as set. Plug outlets, fill to top of vertical lines, and hold for 24 hours. Make final test after roughing in is complete and before connecting sewer.

C. Perform smoke test on drain, waste and vent (DWV) lines in accordance with the following:
   1. Perform smoke test on DWV lines after all fixtures have been permanently connected and all traps filled with water.

2. Close all windows and doors in the building and turn HVAC system off for the duration of the smoke test.
3. One or more smoke machines to be connected to main building clean out or other suitable connection. Smoke machines to produce a thick penetrating smoke. Smoke produced by chemical mixtures are not acceptable.
4. Add smoke to the system until smoke is visible at vent stacks. Plug vent stacks and continue to add smoke until a pressure of 1-inch water column is produced. Maintain pressure for a minimum of 15 minutes.
5. Visually inspect each connection and fixture for smoke. Any odor or sign of smoke is indication of system failure.
6. Repair all leaks and retest.

3.12 SPECIAL TESTING PROCEDURES

A. Chlorine Gas Piping Systems
1. Clean all portions of the chlorine gas system with a chlorinated solvent such as trichloroethylene. Hydrocarbons or alcohols are not allowed. Cleaning may be accomplished by pulling a cloth saturated with solvent through each length of pipe.
2. Hydrostatically test the system at 300 psig for two hours.
3. Drying: Chlorine gas lines are to be dried prior to introducing gas into the system. Drying to be accomplished by passing steam through the line until all lines are thoroughly heated. While steaming, allow condensate and foreign matter to drain out. Disconnect the steam supply and drain all low spots. While the line is still warm dry air (air with a dew point of -40°F or less) is to be blown through the line until dry. Air drying may take several hours.
4. Gas Testing: After the system is dry, pressurize the system to 150 psig with dry air (-40°F) or nitrogen and test for leaks at joints using soapy water. After testing all joints hold pressure for 30 minutes.
5. Introduce chlorine gas gradually into system and test for leaks at all joints using ammonia water solution.
6. Reference Chlorine Institute Pamphlet No. 6 for any additional testing requirements.

B. LPG or Natural Gas Piping Systems
1. After piping installation is complete, but before installation of gas cocks, test the piping system with LP-gas or air at a pressure of 15 psig for 30 minutes. The source of pressure is to be disconnected from the system and there is to be no loss of pressure on the gauge during the test period.
2. After installation of gas cocks, test the system again with air or LP-gas at 5 psig for 15 minutes. Gas source is to be disconnected and no loss of pressure allowed.
3. If appliances are installed at the same time as the piping system, a final pressure test (including appliance valves) is to be made. The system is to be tested at not more than 14″ water column and not less than 10″ water column for a period of 15 minutes without a drop in pressure.
4. During testing, the piping system is to remain at a constant temperature so that a rise in temperature with a resultant rise in pressure does not mask small leaks.
5. Reference the current edition of the Uniform Plumbing Code for any additional testing requirements.

C. Air Piping Systems
1. Depending on the size of the piping, the system is to be hydrostatically tested or tested with high pressure air. In general, all piping larger than 2″ in size is to be hydrostatically tested. Piping 2″ and smaller may be hydrostatically tested or high pressure air tested (CONTRACTOR's Option).

2. High pressure air systems (systems with a working pressure greater than 15 psig) are to receive a 24-hour stand pressure time test. Test pressure to be 150% of system working pressure, but not less than 150 psig. System to hold pressure for 24-hours with a loss of no greater than 5 psig.
3. Low pressure air systems (systems with a working pressure less than 15 psig) are to receive a 2-hour stand pressure time test at 25 psig. No pressure loss allowed.

D. Vacuum Piping: Test and purge system in accordance with NFPA 56F.

3.13 TESTING PROCEDURES AT INTERFACES WITH EXISTING PIPING OR BOUNDARIES

A. New Piping That Connects to Existing Piping
1. Complete piping up to final closure between existing and new piping.
2. Test new piping per applicable paragraph of this Specification by installing a closure piece to isolate the new section. Test pressure as specified or noted.
3. Complete connection to existing piping. If underground, leave joint exposed.
4. Test piping again, per applicable paragraph of this Specification, to verify the integrity of the completed joint.
   a. Isolate existing piping by installing test plugs or closing valves if they exist. Only isolate piping necessary to verify joint integrity. Test pressure at the interface between new and existing piping to be 110% of the maximum working pressure at the interface. Hold test pressure for one hour. If pressure test fails, maintain pressure at the joint by adding water to the system and visually inspect joint for leaks. If no leaks are visible at the interface, no further testing is required. If leaks are visible, repair and retest.
   b. Only when noted on PLANS or specified elsewhere, place piping in service and visually inspect joint(s). If no leaks are visible at the interface after pressurizing to the maximum working pressure, no further testing is required. If leaks are visible, repair and retest.
5. Coordination with plant operations is required for removing line from service, closing valves and shutdowns.

B. Pipe Testing at the Boundary Between Two Construction Contracts
1. “Installed” piping at the boundary between two construction Contracts is defined as piping that has been installed and tested per Contract Requirements and approved by the ENGINEER.
2. If Connecting Pipe Has Not Been Installed:
   a. Install closure piece (i.e. plug, blind flange, etc.) at the boundary and test per applicable paragraph of this Specification. Test pressure to be as specified.
3. If Pipe at Boundary Is Installed:
   a. Complete piping up to final closure at the boundary.
   b. Test new piping per applicable paragraph of this Specification by installing a closure piece to isolate the new section. Test pressure as specified.
   c. Complete connection at boundary. If underground, leave joint exposed.
   d. Retest piping. Test pressure to be 100% of the maximum working pressure at the boundary. If there are no visible leaks at the interface, then no further testing is required. If leaks are visible at the interface, repair and retest.

3.14 MEASUREMENT AND PAYMENT

No separate measurement or payment for work performed under this Section. Include cost of same in Contract price bid for work of which this is a component part.

ATTACHMENT “A”

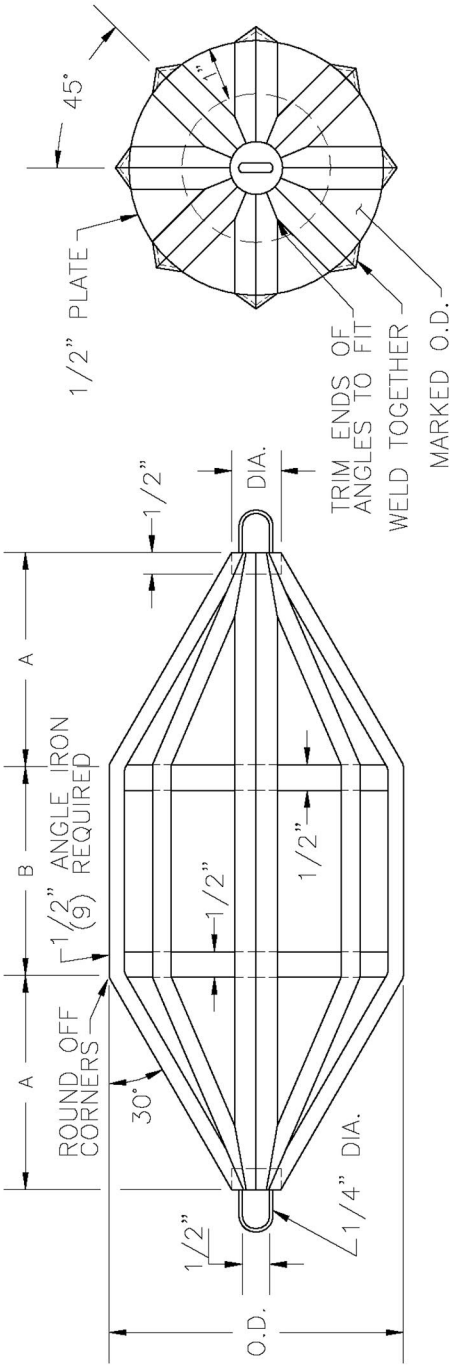

SIDE or TOP VIEW

PIPE SIZE (IN.)	A (IN.)	B (IN.)	MANDREL O.D. PVC (SDR-26) ASTM D3034 (IN.)	DIA. (IN.)
6	4.0	4	5.50	1.00
8	5.3	6	7.37	1.40
10	6.7	6	8.64	1.67
12	8.0	8	10.96	1.95
15	10.0	9	13.42	2.15

PIPE SIZE (IN.)	A (IN.)	B (IN.)	MANDREL O.D. PVC (SDR-26) ASTM F679 (IN.)	DIA. (IN.)
18	12	12	16.49	2.89
21	14	14	19.44	3.57
24	16	16	21.87	3.73
27	18	18	23.51	4.25

DEFLECTION TESTING MANDREL

SCALE:

ATTACHMENT "B"

Service	Size	Required Tests	Test Pressure	Duration	Remarks
Gravity					
A. Storm Sewer	All	Visual	None	N/A	
B. Sanitary Sewer	All	(Exfiltration or Infiltration or Low Pressure Air) + TV + Mandrel	See Text	See Text	
C. Surcharged	All	Hydrostatic	150% of system pressure	2 Hrs. (min.)	
Above Ground					
A. Pump Suction	All	Hydrostatic & Leakage	150% of max. wet well level (25 psi min.)	1 Hr. (min.)	No leaks allowed
B. Pump Discharge	All	Hydrostatic & Leakage	150% of pump shut-off head (100 psi min.)	2 Hrs. (min.)	
C. All Others	All	Hydrostatic & Leakage	150% of system pressure (100 psi min.)	2 Hrs. (min.)	
Underground Pressure Piping	All	Hydrostatic & Leakage	Waterlines: 150 psi Pump discharge: 150% of pump shut-off head (100 psi min.)	2 Hrs. (min.)	
Plumbing (Inside Building)					
A. DWV	All	Low pressure air or hydrostatic smoke	5 psi See Text	24 Hrs. See Text	No leaks allowed
B. Waterlines	All		100 psi	See Text	No leaks allowed
Tank & Fill Drain	All	Hydrostatic & Leakage	150% of tank head	2 Hrs. (min.)	No leaks allowed
Open-Ended Piping	Up to 48″	Hydrostatic & Leakage	25 psi If >48″, consult ENGINEER	1 Hr. (min.)	
Gas Piping					
A. Low Pressure Air	Up to 2″ >2″	High Pressure Air Hydrostatic	25 psi	2 Hrs. (min.)	No leaks allowed
B. High Pressure Air	Up to 2″ >2″	High Pressure Air Hydrostatic	150% of system pressure (150 psi min.)	24 Hrs.	
C. Vacuum	All	High Pressure Air	25 psi	2 Hrs. (min.)	No leaks allowed
D. All Others	Up to 2″ >2″	High Pressure Air Hydrostatic	See Text	See Text	No leaks allowed

END OF SECTION

THIS PAGE LEFT BLANK INTENTIONALLY

SECTION 02770

CONSTRUCTION OF UNDERGROUND LINES

PART 1 GENERAL

1.01 SUMMARY

A. This Section includes furnishing all equipment, tools, supplies, labor and supervision required for construction of underground pipelines.

1.02 RELATED REQUIREMENTS

A. Testing of the completed work being performed under this Section to be in accordance with the related Specification Section included with these Contract Documents for the specific pipe being installed and/or as shown on the PLANS.

B. Backfill in the pipe zone and above the pipe zone to be in accordance with details shown on PLANS and as required by the Specifications.

C. Concrete, if required, to be in accordance with the specific concrete specification included with these Contract Documents and/or as shown on PLANS.

D. Trench Shoring to be in accordance with the requirements specified in Section 509S "Excavation Safety System".

1.03 REFERENCES

The Publications listed below form a part of this Specification to the extent referenced. The publications are referred to in the text by basic designation only.

AMERICAN SOCIETY OF TESTING AND MATERIALS (ASTM)

ASTM D698	1991 Test Method for Laboratory Compaction Characteristics of Soil Using Standard Effort (12,400 ft-lb/ft [600 kN-m/m])

1.04 - 1.11 (NOT USED)

PART 2 PRODUCTS (NOT USED)

PART 3 EXECUTION

3.01 - 3.02 (NOT USED)

3.03 ERECTION/INSTALLATION/APPLICATION AND/OR CONSTRUCTION

A. Methods of Construction
   1. Control of Work
      a. General: CONTRACTOR to transfer line and grade from established control points to the trench. Line and grade may be set by use of batter boards or laser beam.
      b. Batter Boards: Furnish and place stakes and batter boards for locating work. Batter board spacing not to exceed 25 feet center-to-center unless otherwise directed. Use batter boards 1-inch by 3 inches, planed on four sides to parallel faces. Protect boards and locating stakes from damage

or change in location. Use good, sound twirled lines or wire for use in setting lines and grades. Use plummets and graduated poles necessary to accurately transfer line and grade.

c. Laser Beams: Set laser at manhole invert or other control points at proper horizontal alignment. Set laser beam at proper grades, project the laser beam on target set in pipe centerline for proper alignment of each joint of pipe. The elevation of the pipe invert to be checked at intervals of not more than 200 feet during pipe laying operations.

2. For Lines Laid on Grade: Lay and maintain pipe to required lines and grades with specials at required locations, and with joints centered and spigots "home."
3. For Lines Not Laid to Grade: Lay and maintain pipe fittings and specials to alignment shown on PLANS. Minimum cover (measured from top of pipe) at street intersection, 5 feet; minimum cover below flow line of drainage ditches, 1 foot 6 inches; minimum cover at other locations, 3 feet 6 inches unless specifically shown on PLANS. Maintain required clearances and depths shown on PLANS or required for certain sections.

B. Excavation and Trench Preparation

1. General: Excavate trench to alignment and depth required. Brace trench and drain as required so work may be accomplished safely and efficiently. If necessary, install dewatering system to provide a dry trench bottom. Deliver clan/clear discharge from pumps to natural drainage channels or to drains.
2. Width of Trench: As shown on PLANS. Excavate and maintain sides of trench substantially vertical. Trench must be kept vertical in area of pipe zone, 1 foot above top of pipe.
3. Correcting Faulty Grade: Correct with approved material, thoroughly compacted, any portion of trench excavated below grade.
4. Bell Holes: Provide bell holes of ample dimensions to permit proper jointing.
5. Braced and Sheeted Trenches: Sheet and brace excavations in accordance with OSHA requirements wherever necessary to prevent caving. Increase trench width as required for sheeting. Sheeting not required to be left in place, cannot be pulled until pipe has been laid and backfill compacted to depth of 2 feet over pipe. Sheet and brace in accordance with Specification Section 509S "Trench Excavation Safety System".
6. Care of Surface Material for Reuse: Keep surface material approved for reuse separate from general excavation material.
7. Manner of Stockpiling Excavated Material: Stockpile excavated material so as not to endanger work, pollute, or cause interference with public streets and driveways. Keep drainage channels clear or provide other satisfactory means for drainage.
8. Trenching by Machine or by Hand: Unless otherwise specifically required, CONTRACTOR may use backhoe or trenching machine except where hand methods must be employed to avoid damage to existing structures above or below ground, or where hand excavation is indicated on the PLANS.
9. Open Trench: The ENGINEER may limit amount of trench opened or partially opened at any time in advance of completed pipe laying operation, and amount of trench left unfilled. Open no more than 300 feet of trench on any street at one time. Keep streets open where possible.
10. Disposition of Defective Materials: Remove rejected backfill materials from excavation operations and dispose of off jobsite at CONTRACTOR's expense with no additional cost to the OWNER.

C. Pipe Handling

1. Handling and Storage: Unload pipe, fittings, and other accessories at point of delivery; haul to and distribute at site of project. Load and unload materials by

use of hoists, skids, or other approved means to avoid damage. Distribute for convenient laying and to cause minimum inconvenience to public.

2. Inspection: Before lowering and while suspended, inspect pipe for defects.
3. Pipe Kept Clean: Remove foreign matter from pipe and keep clean by approved methods during and after laying.

D. Pipe Laying

1. Unsuitable Conditions for Laying Pipe: No pipe is to be laid in water or when trench condition or weather is unsuitable for such work unless specifically approved by ENGINEER.
2. Nonpressure Concrete and Vitrified Clay Pipe: Lay pipe with ends abutting and true to line and grade. Fit and lay pipe to form smooth and uniform invert. Clean sockets prior to lowering into trench. Commence laying of pipe at lowest point so that spigot ends point in direction of flow.
3. Ductile Iron Pipe: Lay ductile iron pipe on firm bedding with spigot ends pointing in the direction of flow for a gravity system.
4. Other Pipe: Lay other types of pipe in accordance with approved manufacturers instructions and with applicable provisions of this Specification Section and/or as shown on PLANS.
5. Cutting Pipe: Cut ductile iron pipe with wheel-type cutters or cold chisel. Flame cutting of ductile iron pipe is not allowed. Make cuts in a neat and workmanlike manner without damage to pipe and so as to leave a smooth end at right angles to axis of pipe. Field cutting of Polyvinyl Chloride pipe to be per pipe manufacturer's recommendations. Field cutting of concrete pressure pipe is not permitted.
6. Deflection of Pipe Joints: Obtain approval of degree of deflection whenever necessary to deflect from straight line. Where necessary to make major deflection in concrete pressure pipe, use sections of pipe with beveled ends for deflection not exceed 5 degrees or the manufacturer's recommendations, whichever is less. For deflection greater than 5 degrees, use fabricated fittings for concrete pressure pipe and use ductile iron fittings for PVC pressure pipe. Minor deflections may be obtained in pipe joints.
7. Temporary Plug: When pipe laying operation is halted, seal open end of pipe with temporary plug. Plug to remain in place until pipe laying operation commences again. Pipe plug to be blocked as not to allow entry by animal or human elements.
8. Field Assistance: Manufacturer of concrete pressure pipe to furnish field representative to assist, as directed by the ENGINEER, and advise on construction problems which might arise.

E. Plugging Dead Ends: Insert standard plug into bells of all dead ends of pipe.

F. Concrete Blocking: Provide thrust blocking (pipe blocking) for pressure pipelines at all bends, tees, points where reducers or changes in pipe diameter occurs, fire hydrants or flushing valves, and all plugged openings. A combination of thrust blocking and pipe restrained joints may be used. Place sufficient/adequate blocking against solid ground, with area of bearing on pipe and on ground in each instance as required for pipe test pressure. Place blocking so that all joints will be accessible for repair. For gravity pipelines, place a minimum of 6 inches of concrete on all sides of pipe for encasing, embedding, or blocking where indicated on PLANS.

G. Backfilling

1. Time of Backfilling: As soon as practicable after completion of laying and jointing pipe, backfill trench. Complete backfilled trench not more than 200 feet behind pipe laying operations.
2. Materials: As shown on PLANS and as required by the Specifications.

3. Deficiency of Backfill: Supply any deficiency in quantity of materials for backfilling trenches or for filling depressions caused by settlement.

3.04- 3.06 (NOT USED)

3.07 CLEANING AND PROTECTION

Remove from site of work, and from public and private property, temporary structures, rubbish, and waste materials, including excess excavated materials. Dispose of surplus earth at locations acceptable to OWNER. Complete clean up not greater than 2,000 feet behind pipe laying operation. Pipe laying operation to be suspended temporarily if complete clean up is further behind than 2,000 feet.

3.08 - 3.10 (NOT USED)

3.11 MEASUREMENT AND PAYMENT

No separate measurement or payment for Work performed under this Section. Include cost in Contract bid price bid for this work.

END OF SECTION

SECTION 05010

METALS FOR STRUCTURES

PART 1 GENERAL

1.01 SUMMARY

A. This Section includes the furnishing and fabrication of various metals for various types of structures shown on PLANS.

1.02 RELATED REQUIREMENTS

A. Related work as called for on PLANS or specified in this or other TECHNICAL SPECIFICATION sections.

1.03 REFERENCES

The publications listed below form a part of this Specification to the extent referenced. The publications are referred to in the text by basic designation only.

AMERICAN SOCIETY FOR TESTING AND MATERIALS (ASTM)

ASTM A27/A27M	Standard Specifications for Steel Bars, Carbon and Alloy, Hot-Wrought and Cold-Finished
ASTM A36/A36M	Standard Specification for Structural Steel
ASTM A123	Standard Specification for Zinc (Hot-Dip Galvanized) Coatings on Iron and Steel Products
ASTM A153	Standard Specification for Zinc Coating (Hot-Dip) on Iron and Steel Hardware
ASTM A167	Standard Specification for Stainless and Heat-Resisting Chromium-Nickel Steel Plate, Sheet and Strip
ASTM A193/A193M	Standard Specification for Alloy-Steel and Stainless Steel Bolting Materials for High-Temperature Service
ASTM A307	Standard Specification for Carbon Steel Bolts and Studs, 60,000 psi Tensile Strength
ASTM A325	Standard Specification for Structural Bolts, Steel, Heat Treated, 120/105 ksi Minimum Tensile Strength
ASTM A384	Standard Practice for Safeguarding Against Warpage and Distortion During Hot-Dip Galvanizing or Steel Assemblies
ASTM A525	Standard Specification for General Requirements for Steel Sheet, Zinc-Coated (Galvanized) by the Hot-Dip Process
ASTM A992 / A992M-00	Standard Specification for Steel for Structural Shapes for use in Building Framing
ASTM B29	Standard Specification for Refined Lead

ASTM B133/B133M	Standard Specification for Copper Rod, Bar, and Shapes
ASTM B152/B152M	Standard Specification for Copper Sheet, Strip, Plate, and Rolled Bar
ASTM B221	Standard Specification for Aluminum and Aluminum-Alloy Extruded Bars, Rods, Wire, Shapes, and Tubes
ASTM B308/B308M	Standard Specification for Aluminum-Alloy 6061-T6 Standard Structural Shapes

1.04 - 1.11 (NOT USED)

PART 2 PRODUCTS

2.01 MANUFACTURER(S) (NOT USED)

2.02 MATERIALS AND/OR EQUIPMENT

A. Structural Steel:
   1. Rolled Wide Flange Shapes: Per ASTM A992/A992M.
   2. All other Rolled Shapes: Per ASTM A36/A36M, unless otherwise noted.

B. Carbon Steel Castings: Per ASTM A27/A27M, Grade 60-30M (Minimum).

C. Galvanized Sheet Metal: Per ASTM A525, for zinc-coated (galvanized) iron or steel sheets.

D. Threaded Fasteners
   1. Standard Bolts: Per ASTM A307.
   2. High-Strength Bolts: Per ASTM A325.

E. Corrosion-Resisting (Stainless) Steel
   1. Plate, Sheet, Strip, Fasteners Where No Welding Required: Per ASTM A167, Type 316 unless noted otherwise.
   2. Plate, Sheet, Strip, Fasteners Where Welding Required: Per ASTM A167, Type 316L or unless noted otherwise.
   3. Bolts: Type 316 conforming to ASTM A193 with suitable stainless steel nuts and washers.

F. Copper
   1. Sheet, Strip and Plate: Per ASTM B152/B152M, No. 110.
   2. Rod, Bar, Shapes: Per ASTM B133/B133M, No. 110.

G. Lead: Pig lead per ASTM B29.

H. Aluminum
   1. Structural Shapes, Extrusions, Bars, Grating, Stair Treads: Per ASTM B221 and ASTM B308/B308M, Alloy 6061-T6.
   2. Gravel Stops: Per ASTM B221, Alloy 6063-T42.
   3. Other Items: Per recognized standards.

I. Galvanizing: Per ASTM A123, ASTM A153, and ASTM A384 as applicable.

2.03 - 2.04 (NOT USED)

PART 3 EXECUTION

3.01 - 3.10 (NOT USED)

3.11 MEASUREMENT AND PAYMENT

No separate measurement or payment for work performed under this Section. Include cost of same in Contract price bid for work of which this is a component part.

END OF SECTION

THIS PAGE IS LEFT BLANK INTENTIONALLY

SECTION 05050

WELDING

PART 1 GENERAL

1.01 SUMMARY

A. This specification covers the preheat, welding, postweld heat treatment, and weld inspection requirements for shop and field fabrication of structural welded and tubular components, shapes, and plate material.

1.02 RELATED REQUIREMENTS

A. Other related work as called for on the Drawings or specified elsewhere in this or other TECHNICAL SPECIFICATION sections.

1.03 REFERENCES

The publications listed below form a part of this Specification to the extent referenced. The publications are referred to in the text by basic designation only.

AMERICAN SOCIETY OF NONDESTRUCTIVE TESTING (ASNT)

SNT-TC-IA	RECOMMENDED PRACTICE

AMERICAN WATER WORKS ASSOCIATION (AWWA)

AWWA C206	Field Welding of Steel Water Pipe.
AWWA D100	Welded Steel Tanks for Water Storage.

AMERICAN WELDING SOCIETY (AWS)

AWS B2.1	Standard Welding Procedure Specification.
AWS D1.1	Structural Welding Code – Steel.
AWS QC1	Standard for AWS Certification of Welding Inspectors.

AMERICAN SOCIETY FOR TESTING AND MATERIALS (ASTM)

ASTM E165	Standard Practice for Liquid Penetrant Examination for General Industry
ASTM E709	Standard Guide for Magnetic Particle Testing

AMERICAN SOCIETY OF MECHANICAL ENGINEERS (ASME)

ASME BPVC SEC V	Nondestructive Examination.
ASME BPVC SEC IX	Qualification Standard for Welding and Brazing Procedures, Welders, Brazers, and Welding and Brazing Operators.

1.04 DEFINITIONS (NOT USED)

1.05 QUALIFICATIONS

A. Welding Procedure Specification (WPS): In accordance with AWS D1.1 (Chapter 4, Part B), AWS B2.1 (Annex A), or ASME BPVC SEC IX.

B. Welder/Welding Operator: In accordance with AWS D1.1 (Chapter 4), AWS B2.1 (Chapter 3), or ASME BPVC SEC IX.

C. Welding Inspector: Certified in accordance with AWS QC1, and having prior experience with the welding codes specified.

D. Testing Agency: Personnel performing tests shall be NDT Level II Certified in accordance with ASNT SNT-TC-1A.

1.06 SUBMITTALS

A. Submit the following in accordance with Specification Section 01300, “Submittals”.
   1. In addition to the items specified in Section 01300 “Submittals”, furnish the following information.
      a. Shop Drawings:
         (1) Shop and field welding procedures.
         (2) Procedure qualification records.
         (3) Welding Documentation: Submit on appropriate forms in referenced welding codes.
         (4) Nondestructive testing (NDT) procedure specifications prepared in accordance with ASME BPVC SEC V.
      b. Quality Control Submittals:
         (1) Welding Procedure Specification (WPS).
         (2) Welder/welding operator performance qualifications.
         (3) Certified Welding Inspector (CWI) credentials.
         (4) Testing agency personnel credentials.
         (5) Certified Welding Inspector’s reports.

1.07 SEQUENCING AND SCHEDULING

A. Unless otherwise specified, all submittals required in this section shall be submitted and approved prior to commencement of welding operations.

1.08 – 1.11 (NOT USED)

PART 2 PRODUCTS

2.01 – 2.03 (NOT USED)

2.04 SOURCE QUALITY CONTROL

A. The Certified Welding Inspector (CWI) shall be present whenever shop welding is performed and shall:
   1. Verify conformance of specified job material and proper storage.
   2. Monitor conformance with approved welding procedure specifications.
   3. Monitor conformance of welder/welding operator performance qualification.

4. Provide 100 percent visual inspection and 100 percent NDT, as specified herein, of all welds.
5. Supervise nondestructive testing personnel and evaluate test results.
6. Maintain records and prepare report confirming results of inspection and testing.

PART 3 EXECUTION

3.01 GENERAL

A. Welding and Fabrication by Welding: Conform to governing welding codes referenced in the attached Welding and Nondestructive Testing Table.

B. All welding and NDT of welds shall be performed in accordance with AWS standards.

C. Structural welds shall either be as defined by AISC or defined as all welds which are necessary for the development of strength between adjoining pieces of steel. Structural welds shall be made as shown or noted on design drawings.

D. For structural welds, longitudinal weld seams shall be parallel to the longitudinal axis and shall be complete (100%) penetration butt welds. Longitudinal seams of adjoining rolled plate shall not be in-line, but shall be offset from other longitudinal seams by at least five (5) times the wall thickness of the pipe.

3.02 PREPARATION

A. Weld joint preparation
1. Weld bevels may be prepared by machining, grinding, or thermal cutting. The bevel surfaces shall be reasonably smooth and true to the mating surfaces.
2. The parts to be joined by fillet welds shall be brought together as closely as practicable. The gap between faying surfaces of lap joints should not exceed 1/16-inch. If the separation is greater than 1/16-inch after straightening and assembly, the leg of the fillet weld shall be increased by the amount of separation, but the gap shall not exceed 3/16-inch. The use of filler material is prohibited.

B. Weld cleaning requirements
1. All surfaces to be welded shall be free of paint, oil, dirt, scale, oxides, and other foreign materials detrimental to weld soundness.
2. Flux, weld spatter, and slag shall be removed from each weld bead prior to depositing each succeeding pass.

3.03 ERECTION/INSTALLATION/APPLICATION AND/OR CONSTRUCTION

A. Filler metal requirements
1. Tack welds shall be made with the same type of electrode that is used for depositing the root pass.
2. All welding consumables such as flux, electrodes, and filler wires shall be kept in a clean dry place. Refer to manufacturers' recommendations for proper storage and handling of electrodes.

B. Preheat requirements
1. As required by AWS D1.1.

C. Joint backup requirements
   1. As required by AWS D1.1.

D. Weld contour and finish
   1. Weld beads shall be contoured properly to permit complete fusion at the root or sides of the bevel to minimize the possibility of slag entrapment.
   2. Weld reinforcement and finish shall be as required in AWS D1.1.
   3. Welds which are to be examined by nondestructive methods shall be finished as required for the applicable inspection method.

E. Postweld heat treatment requirements
   1. Normally, post weld heat treatment is not required for carbon steel material in thickness of less than 1-1/2 inches.
   2. For carbon steel material over 1-1/2 inches, and for materials that are used for special service conditions, the post weld heat treatments shall be as approved by the ENGINEER.

3.04 WELD DEFECTS REPAIR

A. Repair and retest rejectable weld defects until sound weld metal has been deposited in accordance with appropriate welding codes.

3.05 FIELD QUALITY CONTROL

A. The Certified Welding Inspector (CWI) shall be present whenever field welding is performed and shall:
   1. Verify conformance of specified job material and proper storage.
   2. Monitor conformance with approved welding procedure specifications.
   3. Monitor conformance of welder/welding operator performance qualification.
   4. Provide 100 percent visual inspection and 100 percent NDT, as specified herein, of all welds.
   5. Supervise nondestructive testing personnel and evaluate test results.
   6. Maintain records and prepare report confirming results of inspection and testing.

3.06 – 3.07 (NOT USED)

3.08 TESTING AND INSPECTION

A. General inspection
   1. At the option of the ENGINEER, any weld designated for radiographic inspection may be ultrasonically inspected and similarly evaluated.
   2. Undercutting beyond the limits of AWS D1.1, surface porosity, and crack-like discontinuities shall be removed to sound metal and repaired. Weld profiles shall be in accordance with Section 5.24 of AWS D1.1.
   3. Welds made by procedures which are not prequalified or have not been properly qualified and approved shall be rejected and completely removed.
   4. Cleanliness shall be maintained after completion of welding. All stubs, rods, flux, slag, and other foreign materials shall be removed from the structure.

B. Nondestructive weld testing
   1. All Welds:
      a. Selection of Welds to be Tested: As agreed upon between ENGINEER and CONTRACTOR.
      b. Unless otherwise specified, perform NDT of welds at a spot testing frequency as shown below or in the attached table in accordance with

the referenced welding codes as follows. In case there is a conflict the higher frequency level of NDT shall apply:

(1) Butt Joint Welds: 100 percent radiographically tested and repaired.

(2) Groove Welds: 100 percent ultrasonically tested and repaired.

(3) Fillet Welds: 100 percent examined and repaired, using either liquid penetrant or magnetic particle inspection methods.

(4) All other welds: 100 percent visually inspected.

c. Unless otherwise specified, perform all NDT in accordance with Chapter 6 of AWS D1.1.

2. Radiographic Examination

a. When radiography of welds is required, the method, procedure, and acceptance criteria shall be in accordance with AWS D1.1, Chapter 6, Part E and AWS B2.1 (Annex E).

3. Ultrasonic Examination

a. When ultrasonic examination of welds is required, the method, procedure, and acceptance criteria shall be in accordance with AWS D1.1, Chapter 6, Part F.

4. Liquid Penetrant Examination

a. When required, liquid penetrant examination shall be in accordance with ASTM E165. Acceptance shall be in accordance with AWS D1.1, Clause 6, Part C.

5. Magnetic Particle Examination

a. When required, magnetic particle examination shall be in accordance with ASTM E709. Acceptance shall be in accordance with AWS D1.1, Clause 6, Part C.

3.09 – 3.10 (NOT USED)

3.11 MEASUREMENT AND PAYMENT

A. Unless otherwise indicated, no separate measurement or payment for work performed under this Section. Include cost of same in Contract price bid for work of which this is a component part.

ATTACHMENT A

WELDING AND NONDESTRUCTIVE TESTING TABLE

WELDING AND NONDESTRUCTIVE TESTING						
Project Feature/ Specification Section	**Governing Welding Codes or Standards**	**Submit Welding Procedure Spec.**	**Submit Welder/ Welding Operator Qual.**	**Onsite Welding Inspector Req'd**	**Submit Written Nondestructive Testing Procedure Specifications**	**Nondestructive Testing Requirements**
All Steel Weld Work (unless otherwise specified in Section 15072)	AWS D1.1, Structural Welding Code–Steel	**Yes**	**Yes**	**Yes**	**Yes**	100% UT(1) or RT(2) of all groove-and-butt joint welds; 100% MT(3) or LP(4) of all fillet welds

(1)UT–Ultrasonic Testing.
(2)RT–Radiographic Testing.
(3)MT–Magnetic Particle Testing.
(4)LP–Liquid Penetrant.
(5)VT–Visual Testing

END OF SECTION

SECTION 05120

STRUCTURAL STEEL

PART 1 - GENERAL

1.1 SUMMARY

A. Section Includes:

1. Structural steel.
2. Grout.

1.2 DEFINITIONS

A. Structural Steel: Elements of the structural frame indicated on Drawings and as described in AISC 303, "Code of Standard Practice for Steel Buildings and Bridges."

1.3 ACTION SUBMITTALS

A. Product Data: For each type of product.

B. Shop Drawings: Show fabrication of structural-steel components.

1.4 INFORMATIONAL SUBMITTALS

A. Welding certificates.

B. Mill test reports for structural steel, including chemical and physical properties.

C. Source quality-control reports.

1.5 QUALITY ASSURANCE

A. Welding Qualifications: Qualify procedures and personnel according to AWS D1.1/D1.1M, "Structural Welding Code - Steel."

B. Comply with applicable provisions of the following specifications and documents:

1. AISC 303.
2. AISC 360.
3. RCSC's "Specification for Structural Joints Using ASTM A 325 or A 490 Bolts."

PART 2 - PRODUCTS

2.1 STRUCTURAL-STEEL MATERIALS

A. W-Shapes: ASTM A 992/A 992M.

B. Channels, Angles, S-Shapes: ASTM A 36/A 36M.

C. Plate and Bar: ASTM A 36/A 36M.

D. Cold-Formed Hollow Structural Sections: ASTM A 500/A 500M, Grade B, structural tubing.

E. Steel Pipe: ASTM A 53/A 53M, Type E or Type S, Grade B.

F. Welding Electrodes: Comply with AWS requirements.

2.2 BOLTS, CONNECTORS, AND ANCHORS

A. High-Strength Bolts, Nuts, and Washers: ASTM A 325, Type 1, heavy-hex steel structural bolts; ASTM A 563, Grade C, heavy-hex carbon-steel nuts; and ASTM F 436, Type 1, hardened carbon-steel washers; all with plain finish.

B. Threaded Rods: ASTM A 36/A 36M.

1. Finish: Hot-dip zinc coating, ASTM A 153/A 153M, Class C.

2.3 PRIMER

A. Primer: Fabricator's standard lead- and chromate-free, non-asphaltic, rust-inhibiting primer complying with MPI#79 and compatible with topcoat.

2.4 GROUT

A. Nonmetallic, Shrinkage-Resistant Grout: ASTM C 1107/C 1107M, factory-packaged, nonmetallic aggregate grout, noncorrosive and non-staining, mixed with water to consistency suitable for application and a 30-minute working time.

2.5 FABRICATION

A. Structural Steel: Fabricate and assemble in shop to greatest extent possible. Fabricate according to AISC 303, "Code of Standard Practice for Steel Buildings and Bridges," and to AISC 360.

2.6 SHOP CONNECTIONS

A. High-Strength Bolts: Shop install high-strength bolts according to RCSC's "Specification for Structural Joints Using ASTM A 325 or A 490 Bolts" for type of bolt and type of joint specified.

1. Joint Type: Snug tightened.

B. Weld Connections: Comply with AWS D1.1/D1.1M for tolerances, appearances, welding procedure specifications, weld quality, and methods used in correcting welding work.

2.7 SHOP PRIMING

A. Shop prime steel surfaces except the following:

1. Surfaces embedded in concrete or mortar. Extend priming of partially embedded members to a depth of 2 inches.
2. Surfaces to be field welded.
3. Surfaces to receive sprayed fire-resistive materials (applied fireproofing).
4. Galvanized surfaces.
5. Surfaces enclosed in interior construction.

B. Surface Preparation: Clean surfaces to be painted. Remove loose rust and mill scale and spatter, slag, or flux deposits. Prepare surfaces according to the following specifications and standards:

1. SSPC-SP 2, "Hand Tool Cleaning."
2. SSPC-SP 3, "Power Tool Cleaning."

C. Priming: Immediately after surface preparation, apply primer according to manufacturer's written instructions and at rate recommended by SSPC to provide a minimum dry film thickness of 1.5 mils. Use priming methods that result in full coverage of joints, corners, edges, and exposed surfaces.

PART 3 - EXECUTION

3.1 EXAMINATION

A. Verify, with certified steel erector present, elevations of concrete- and masonry-bearing surfaces and locations of anchor rods, bearing plates, and other embedment elements for compliance with requirements.

B. Proceed with installation only after unsatisfactory conditions have been corrected.

3.2 ERECTION

A. Set structural steel accurately in locations and to elevations indicated and according to AISC 303 and AISC 360.

B. Baseplates and Bearing Plates: Clean concrete- and masonry-bearing surfaces of bond-reducing materials and roughen surfaces prior to setting plates. Clean bottom surface of plates.

1. Set plates for structural members on wedges, shims, or setting nuts as required.
2. Weld plate washers to top of baseplate.
3. Snug-tighten anchor rods after supported members have been positioned and plumbed. Do not remove wedges or shims but, if protruding, cut off flush with edge of plate before packing with grout.
4. Promptly pack grout solidly between bearing surfaces and plates so no voids remain. Neatly finish exposed surfaces; protect grout and allow to cure. Comply with manufacturer's written installation instructions for shrinkage-resistant grouts.

C. Maintain erection tolerances of structural steel within AISC 303, "Code of Standard Practice for Steel Buildings and Bridges."

3.3 FIELD CONNECTIONS

A. High-Strength Bolts: Install high-strength bolts according to RCSC's "Specification for Structural Joints Using ASTM A 325 or A 490 Bolts" for type of bolt and type of joint specified.

1. Joint Type: Snug tightened.

B. Weld Connections: Comply with AWS D1.1/D1.1M for tolerances, appearances, welding procedure specifications, weld quality, and methods used in correcting welding work.

1. Comply with AISC 303 and AISC 360 for bearing, alignment, adequacy of temporary connections, and removal of paint on surfaces adjacent to field welds.

3.4 FIELD QUALITY CONTROL

A. Testing Agency: Owner will engage a qualified testing agency to perform tests and inspections.

B. Bolted Connections: Inspect bolted connections according to RCSC's "Specification for Structural Joints Using ASTM A 325 or A 490 Bolts."

C. Welded Connections: Visually inspect field welds according to AWS D1.1/D1.1M.

1. In addition to visual inspection, test and inspect field welds according to AWS D1.1/D1.1M and the following inspection procedures, at testing agency's option:

a. Liquid Penetrant Inspection: ASTM E 165.
b. Magnetic Particle Inspection: ASTM E 709; performed on root pass and on finished weld. Cracks or zones of incomplete fusion or penetration are not accepted.

c. Ultrasonic Inspection: ASTM E 164.
d. Radiographic Inspection: ASTM E 94.

END OF SECTION

THIS PAGE IS LEFT BLANK INTENTIONALLY

SECTION 05210

STEEL JOISTS

PART 1 - GENERAL

1.1 SUMMARY

A. Section Includes:

1. Gable steel joists.
2. K-series steel joist substitutes.
3. Joist accessories.

1.2 ACTION SUBMITTALS

A. Product Data: For each type of joist, accessory, and product.

B. Shop Drawings:

1. Include layout, designation, number, type, location, and spacing of joists.
2. Include joining and anchorage details, bracing, bridging, and joist accessories; splice and connection locations and details; and attachments to other construction.

1.3 INFORMATIONAL SUBMITTALS

A. Welding certificates.

B. Manufacturer certificates.

1.4 QUALITY ASSURANCE

A. Manufacturer Qualifications: A manufacturer certified by SJI to manufacture joists complying with applicable standard specifications and load tables in SJI's "Specifications."

1. Manufacturer's responsibilities include providing professional engineering services for designing special joists to comply with performance requirements.

B. Welding Qualifications: Qualify field-welding procedures and personnel according to AWS D1.1/D1.1M, "Structural Welding Code - Steel."

1.5 DELIVERY, STORAGE, AND HANDLING

A. Deliver, store, and handle joists as recommended in SJI's "Specifications."

PART 2 - PRODUCTS

2.1 K-SERIES STEEL JOISTS

A. Steel Joist Substitutes: Manufacture according to "Standard Specifications for Open Web Steel Joists, K-Series" in SJI's "Specifications," with steel-angle or -channel members.

2.2 GABLE STEEL JOISTS

A. Manufacture steel joists according to "Standard Specifications for Longspan Steel Joists, LH-Series and Deep Longspan Steel Joists, DLH-Series" in SJI's "Specifications," with steel-angle top- and bottom-chord members; of joist type and end and top-chord arrangements as indicated.

2.3 PRIMERS

A. Primer: SSPC-Paint 15, or manufacturer's standard shop primer complying with performance requirements in SSPC-Paint 15.

2.4 JOIST ACCESSORIES

A. Bridging: Provide bridging anchors and number of rows of diagonal bridging of material, size, and type required by SJI's "Specifications" for type of joist, chord size, spacing, and span. Furnish additional erection bridging if required for stability.

B. Furnish miscellaneous accessories including splice plates and bolts required by joist manufacturer to complete joist assembly.

2.5 CLEANING AND SHOP PAINTING

A. Clean and remove loose scale, heavy rust, and other foreign materials from fabricated joists and accessories.

B. Apply one coat of shop primer.

PART 3 - EXECUTION

3.1 INSTALLATION

A. Do not install joists until supporting construction is in place and secured.

B. Install joists and accessories plumb, square, and true to line; securely fasten to supporting construction according to SJI's "Specifications," joist manufacturer's written recommendations, and requirements in this Section.

1. Before installation, splice joists delivered to Project site in more than one piece.
2. Space, adjust, and align joists accurately in location before permanently fastening.
3. Install temporary bracing and erection bridging, connections, and anchors to ensure that joists are stabilized during construction.

C. Field weld joists to supporting steel bearing plates. Coordinate welding sequence and procedure with placement of joists. Comply with AWS requirements and procedures for welding, appearance and quality of welds, and methods used in correcting welding work.

D. Install and connect bridging concurrently with joist erection, before construction loads are applied. Anchor ends of bridging lines at top and bottom chords if terminating at walls or beams.

3.2 FIELD QUALITY CONTROL

A. Testing Agency: Owner will engage a qualified independent testing and inspecting agency to inspect field welds and to perform field tests and inspections and prepare test and inspection reports.

END OF SECTION

THIS PAGE IS LEFT BLANK INTENTIONALLY

SECTION 05310

STEEL DECK

PART 1 - GENERAL

1.1 SUMMARY

A. Section Includes:

1. Roof deck.

1.2 ACTION SUBMITTALS

A. Product Data: For each type of deck, accessory, and product indicated.

B. Shop Drawings:

1. Include layout and types of deck panels, anchorage details, reinforcing channels, pans, cut deck openings, special jointing, accessories, and attachments to other construction.

1.3 INFORMATIONAL SUBMITTALS

A. Welding certificates.

B. Product certificates.

C. Evaluation reports.

1.4 QUALITY ASSURANCE

A. Welding Qualifications: Qualify procedures and personnel according to AWS D1.3, "Structural Welding Code - Sheet Steel."

1.5 DELIVERY, STORAGE, AND HANDLING

A. Protect steel deck from corrosion, deformation, and other damage during delivery, storage, and handling.

B. Stack steel deck on platforms or pallets and slope to provide drainage. Protect with a waterproof covering and ventilate to avoid condensation.

PART 2 - PRODUCTS

2.1 PERFORMANCE REQUIREMENTS

A. AISI Specifications: Comply with calculated structural characteristics of steel deck according to AISI's "North American Specification for the Design of Cold-Formed Steel Structural Members."

2.2 ROOF DECK

A. Manufacturers: Subject to compliance with requirements, available manufacturers offering products that may be incorporated into the Work include, but are not limited to, the following:

1. CMC Joist & Deck.
2. Consolidated Systems, Inc.; Metal Dek Group.
3. Nucor Corp.; Vulcraft Group.
4. Verco Manufacturing Co.
5. Wheeling Corrugating Company; Div. of Wheeling-Pittsburgh Steel Corporation.

B. Roof Deck: Fabricate panels, without top-flange stiffening grooves, to comply with "SDI Specifications and Commentary for Steel Roof Deck," in SDI Publication No. 31, and with the following:

1. Galvanized-Steel Sheet: ASTM A 653/A 653M, Structural Steel (SS), Grade 33, G60 zinc coating.
2. Deck Profile: Type IR, intermediate rib.
3. Profile Depth: 1-1/2 inches.
4. Design Uncoated-Steel Thickness: 0.0358 inch.
5. Span Condition: Triple span or more.
6. Side Laps: Overlapped.

2.3 ACCESSORIES

A. General: Provide manufacturer's standard accessory materials for deck that comply with requirements indicated.

B. Mechanical Fasteners: Corrosion-resistant, low-velocity, power-actuated or pneumatically driven carbon-steel fasteners; or self-drilling, self-threading screws.

C. Side-Lap Fasteners: Corrosion-resistant, hexagonal washer head; self-drilling, carbon-steel screws, No. 10 minimum diameter.

D. Flexible Closure Strips: Vulcanized, closed-cell, synthetic rubber.

E. Miscellaneous Sheet Metal Deck Accessories: Steel sheet, minimum yield strength of 33,000 psi, not less than 0.0359-inch design uncoated thickness, of same material and finish as deck; of profile indicated or required for application.

F. Galvanizing Repair Paint: ASTM A 780.

PART 3 - EXECUTION

3.1 EXAMINATION

A. Examine supporting frame and field conditions for compliance with requirements for installation tolerances and other conditions affecting performance.

B. Proceed with installation only after unsatisfactory conditions have been corrected.

3.2 INSTALLATION, GENERAL

A. Install deck panels and accessories according to applicable specifications and commentary in SDI Publication No. 31, manufacturer's written instructions, and requirements in this Section.

B. Place deck panels on supporting frame and adjust to final position with ends accurately aligned and bearing on supporting frame before being permanently fastened. Do not stretch or contract side-lap interlocks.

C. Place deck panels flat and square and fasten to supporting frame without warp or deflection.

D. Cut and neatly fit deck panels and accessories around openings and other work projecting through or adjacent to deck.

E. Provide additional reinforcement and closure pieces at openings as required for strength, continuity of deck, and support of other work.

F. Comply with AWS requirements and procedures for manual shielded metal arc welding, appearance and quality of welds, and methods used for correcting welding work.

G. Mechanical fasteners may be used in lieu of welding to fasten deck. Locate mechanical fasteners and install according to deck manufacturer's written instructions.

H. Miscellaneous Roof-Deck Accessories: Install ridge and valley plates, finish strips, end closures, and reinforcing channels according to deck manufacturer's written instructions. Weld or mechanically fasten to substrate to provide a complete deck installation.

   1. Weld cover plates at changes in direction of roof-deck panels unless otherwise indicated.

3.3 ROOF-DECK INSTALLATION

A. Fasten roof-deck panels to steel supporting members by arc spot (puddle) welds of the surface diameter indicated or arc seam welds with an equal perimeter that is not less than 1-1/2 inches long, and as follows:

   1. Weld Diameter: 5/8 inch, nominal.
   2. Weld Spacing: Weld edge and interior ribs of deck units with a minimum of two welds per deck unit at each support. Space welds 12 inches apart in the field of roof and 6 inches apart in roof corners and perimeter, based on roof-area definitions in FMG Loss Prevention Data Sheet 1-28.

B. Side-Lap and Perimeter Edge Fastening: Fasten side laps and perimeter edges of panels between supports, at intervals not exceeding the lesser of 1/2 of the span or 18 inches, and as follows:

1. Mechanically fasten with self-drilling, No. 10 diameter or larger, carbon-steel screws.
2. Fasten with a minimum of 1-1/2-inch-long welds.

C. End Bearing: Install deck ends over supporting frame with a minimum end bearing of 1-1/2 inches, with end joints as follows:

1. End Joints: Lapped 2 inches minimum or butted at Contractor's option.

D. Miscellaneous Roof-Deck Accessories: Install ridge and valley plates, finish strips, end closures, and reinforcing channels according to deck manufacturer's written instructions. Weld or mechanically fasten to substrate to provide a complete deck installation.

1. Weld cover plates at changes in direction of roof-deck panels unless otherwise indicated.

E. Flexible Closure Strips: Install flexible closure strips over partitions, walls, and where indicated. Install with adhesive according to manufacturer's written instructions to ensure complete closure.

3.4 FIELD QUALITY CONTROL

A. Testing Agency: Owner will engage a qualified testing agency to perform tests and inspections.

B. Field welds will be subject to inspection. Testing agency will report inspection results promptly and in writing to Contractor and Engineer.

C. Remove and replace work that does not comply with specified requirements.

D. Additional inspecting, at Contractor's expense, will be performed to determine compliance of corrected work with specified requirements.

3.5 PROTECTION

A. Galvanizing Repairs: Prepare and repair damaged galvanized coatings on both surfaces of deck with galvanized repair paint according to ASTM A 780 and manufacturer's written instructions.

END OF SECTION

SECTION 05500

METAL FABRICATIONS

PART 1 GENERAL

1.01 SUMMARY

A. Section Includes:
1. Metal grating stair tread.
2. Aluminum stair nosing.
3. Concrete inserts.
4. Ladders.
5. Metal gratings.
6. Metal tread plate.
7. Preformed channel pipe supports.
8. Stairs.
9. Miscellaneous metals.
10. Associated accessories to the above items.

1.02 RELATED REQUIREMENTS

A. The Contract Documents are complementary; what is called for by one is as binding as if called for by all.

B. It is the CONTRACTOR's responsibility for scheduling and coordinating the Work of subcontractors, suppliers, and other individuals or entities performing or furnishing any of the CONTRACTOR's Work.

1.03 REFERENCES

The publications listed below for a part of this specification to the extent referenced. The publications are referenced in the text by basic designation only.

A. Aluminum Association (AA):
1. Specification M12-C22-A41 - Aluminum Finishes.

B. American Association of State Highway and Transportation Officials (AASHTO):
1. Standard Specifications for Highway Bridges.

C. American Society for Testing and Materials (ASTM):
1. A 36/A 36M - Standard Specification for Structural Steel.
2. A 48 - Standard Specification for Grey Iron Castings.
3. A 53 - Standard Specification for Pipe, Steel, Black and Hot-Dipped, Zinc-Coated, Welded, and Seamless.
4. A 123 - Standard Specification for Zinc (Hot-Dip Galvanized) Coatings on Iron and Steel Products.
5. A 240 - Standard Specification for Heat-Resisting Chromium and Chromium-Nickel Stainless Steel Plate, Sheet, and Strip for Pressure Vessels.
6. A 269 - Standard Specification for Seamless and Welded Austenitic Stainless Steel Tubing for General Service.
7. A 276 - Standard Specification for Stainless Steel Bars and Shapes.

8. A 307 - Standard Specification for Carbon Steel Bolts and Studs, 60,000 PSI Tensile Strength.
9. A 325 - Standard Specification for High-Strength Bolts for Structural Steel Joints.
10. A 489 - Standard Specification for Carbon Steel Lifting Eyes.
11. A 490 - Standard Specification for Heat-Treated Steel Structural Bolts, 150 ksi Minimum Tensile Strength.
12. A 500 - Standard Specification for Cold-Formed Welded and Seamless Carbon Steel Structural Tubing in Rounds and Shapes.
13. A 501 - Standard Specification for Hot-Formed Welded and Seamless Carbon Steel Structural Tubing.
14. A 569 - Standard Specification for Steel, Carbon (0.15 Maximum, Percent) Hot-Rolled Sheet and Strip Commercial Quality.
15. A 570/A 570M - Standard Specification for Steel, Sheet and Strip, Carbon. Hot-Rolled, Structural Quality.
16. A 635/A 635M - Standard Specification for Steel, Sheet and Strip, Heavy-Thickness Coils, Carbon, Hot-Rolled.
17. A 653/A 653M - Standard Specification for Steel Sheet, Zinc-Coated (Galvanized) or Zinc-Iron Alloy-Coated (Galvannealed) by the Hot-Dip Process.
18. [A 992/A 992M - Standard Specification for Structural Steel Shapes.]
19. B 209 - Standard Specification for Aluminum and Aluminum-Alloy Sheet and Plate.
20. B 221 - Standard Specification for Aluminum and Aluminum-Alloy Extruded Bars, Rods, Wire, Profiles, and Tubes.
21. B 308 - Standard Specification for Aluminum-Alloy 6061-T6 Standard Structural Profiles.
22. B 429 - Standard Specification for Aluminum-Alloy Extruded Structural Pipe and Tube.
23. F 593 - Standard Specification for Stainless Steel Bolts, Hex Cap Screws and Studs.

D. American Welding Society (AWS):
1. Standard Symbols for Welding, Brazing, and Nondestructive Examination.

E. National Association of Architectural Metal Manufacturers (NAAMM):
1. Metal Finishes Manual.

F. Occupational Safety and Health Administration (OSHA).
1. Code of Federal Regulations (CFR), Title 29, Labor, Pt. 1900-1990.

1.04 – 1.05 (NOT USED)

1.06 SUBMITTALS

A. Product Data:
1. Metal grating stair tread.
2. Aluminum stair nosing.
3. Metal grating.

B. Shop Drawings:
1. Ladders.

2. Metal grating.
3. Metal tread plate.
4. Stairs.
5. Miscellaneous metals.

C. Quality Control Submittals:
1. Design data and calculations. Stairs and ladders to include drawings and calculations, signed and sealed by ENGINEER registered in the State of Texas.
2. Test Reports:
a. Gratings:
1) Grating manufacturers' calculations showing that gratings will meet specified design load, stress, and deflection requirements for each size grating for each span.
2) Reports of tests performed.

1.07 – 1.11 (NOT USED)

PART 2 PRODUCTS

2.01 MANUFACTURERS (NOT USED)

2.02 MATERIALS

A. General: Unless otherwise specified or indicated on the Drawings, structural and miscellaneous metals shall conform with the standards of the ASTM, including the following:

Item	ASTM Standard No.	Class, Grade Type or Alloy No.
Cast Iron		
Cast Iron	A 48	Class 40B
Steel		
Galvanized sheet iron or steel	A 653	Coating G90
Black steel, sheet or strip	A 569 A 570	--
Coil (plate)	A 635	--
Structural plate, bars, rolled shapes, and miscellaneous items (except W shapes).	A 36	--
Rolled W shapes	A 992	Grade 50
Standard bolts, nuts, and washers	A 307	--
High strength bolts, nuts, and hardened flat washers	A 325 A 490	--
Eyebolts	A 489	Type 1
Tubing, cold-formed	A 500	--
Tubing, hot-formed	A 501	--
Steel pipe	A 53	Grade B

Item	ASTM Standard No.	Class, Grade Type or Alloy No.
Stainless steel		
Plate, sheet, and strip	A 240	Type 304* or 316**
Bars and shapes	A 276	Type 304* or 316**
Bolts (Type 304)	F593	Group 1 Condition CW
Bolts (Type 316)	F593	Group 2 Condition CW
Aluminum		
Flashing sheet aluminum	B 209	Alloy 5005-H14, 0.032 inches minimum thickness
Structural sheet aluminum-	B 209	Alloy 6061-T6
Structural aluminum	B 209 B 308	Alloy 6061-T6
Extruded aluminum	B 221	Alloy 6063-T42
* Use Type 304L if material will be welded. ** Use Type 316L if material will be welded.		

1. Stainless steels are designated by type or series defined by ASTM.
2. Where stainless steel is welded, use low-carbon stainless steel.

2.03 MANUFACTURED UNITS

A. Metal Grating Stair Tread:
   1. Material: Welded steel grating tread with non-slip nosing and integral end plates for bolt on attachment to stair stringers. Manufactured and galvanized per subsection 2.03.E.3.below.
   2. Size:
      a. Tread Width: To equal tread spacing plus 1 inch minimum.
      b. Tread Length: Length to suit stringer to stringer dimension indicated on the Drawings.
      c. Depth: 1-3/4 inches.
   3. Bolts: Type 304 stainless steel.

B. Aluminum Stair Nosing:
   1. Manufacturers: One of the following or equal:
      a. Wooster Products, Inc., Type 101 Nosing.
      b. American Safety Tread Co., Inc., Style 801 Nosing.
   2. Material: Cast aluminum abrasive nosings with aluminum oxide granules integrally cast into metal, forming permanent, nonslip, long-wearing surface.
   3. For installation in cast-in-place stairs.
   4. Configuration: 4 inches wide, fabricated with integrally cast stainless steel anchors at approximately 12-inch centers. Length to extend within 3 inches of stair edge on each side.

C. Ladders:

1. General:

a. Type: Safety type conforming to local, State, and Occupational Safety and Health Administration standards as minimum. Furnish guards for ladder wells.

b. Size: 18 inches wide between side rails of length, size, shape, detail, and location indicated on the Drawings.

2. Metal Ladders:

a. Materials: 6063-T5 aluminum alloy, except where submerged or where specifically called for: Type 304L stainless steel.

b. Rungs:

1) Corrugated, dimpled, skid-resistance and shaped to prevent slipping off the end of rung.

2) Capable of withstanding 1,000-pound load without failure.

c. Side Rails: Minimum 4-inch by 1/2-inch flat bars.

d. Fabrication:

1) Welded construction, of size, shape, location, and details indicated on the Drawings.

2) For ladders over 20 feet high, fall prevention system designed in accordance with State and Occupational Safety and Health Administration requirements.

D. Metal Gratings:

1. General:

a. Fabricate grating to cover areas indicated on the Drawings.

b. Unless otherwise indicated on the Drawings, grating over an opening shall cover entire opening.

c. Make cutouts in grating where required for equipment access or protrusion, including valve operators or stems, and gate frames.

d. Band Ends of Grating and Edges of Cutouts in Grating:

1) End Banding: 1/4 inch less than height of grating, with top of grating and top edge of banding flush.

2) Cutout Banding: Full-height of grating.

3) Use banding of same material as grating.

4) Panel Layout: Enable installation and subsequent removal of grating around protrusions or piping.

5) Openings 6 Inches and Larger: Lay out grating panels with edges of 2 adjacent panels located on centerline of opening.

6) Openings smaller than 6 Inches: Locate opening at edge of single panel.

7) Where an area requires more than 1 grating section to cover area, clamp adjacent grating sections together at 1/4-points with fasteners acceptable to ENGINEER.

8) Fabricate grating in units of maximum 50 pounds each.

e. When requested by ENGINEER, test 1 section of each size grating for each span length involved on the job under full load:

1) Furnish a suitable dial gauge for measuring deflections.

f. Grating shall be galvanized steel, unless otherwise specified or indicated on the Drawings.

2. Aluminum Grating:
    a. Material for Gratings, Shelf Angles, and Rebates: 6061-T6 or 6063-T6 aluminum alloy, except cross bars may be 6063-T5 aluminum alloy.
    b. Shelf Angle Concrete Anchors: Type 304 or Type 316 stainless steel.
    c. Grating Rebate Rod Anchors: 6061-T6 or 6063-T6 aluminum alloy.
    d. Bar Size and Spacing: As determined by manufacturer to enable grating to support design load.
    e. Design Live Load: A minimum of 150 pounds per square foot uniform live load on entire grating area, but not less than the live load indicated on the Drawings for the area where grating is located.
    f. Maximum Fiber Stress for Design Load: 12,000 pounds per square inch.
    g. Maximum Deflection Due to Design Load: 1/240 of grating clear span.
    h. Maximum Spacing of Main Grating Bars: 1-1/8 inches clear between bars.
    i. Minimum Grating Height: 1-1/2 inches.
    j. Manufacturers: One of the following or equal:
        1) McNichols Company.
        2) IKG Borden Industries.
        3) Seidelhuber Metal Products, Inc., grooved I-Bar.
3. Steel Gratings:
    a. Hot-dip galvanized in accordance with ASTM A 123.
    b. Bar Size and Spacing: Shall meet NAAMM of W-19-4 (1”x 3/16”) and as determined by the manufacturer to support design load.
    c. Design Live Load: A minimum of 150 pounds per square foot uniform live load on the entire area of the grating area, but not less than the live load indicated on the Drawings for the area where the grating is located.
    d. Maximum Fiber Stress for Design Load: 18,000 pounds per square inch.
    e. Maximum Deflection Under Design Load: 1/240 of grating clear span.
    f. Bar Spacing: Maximum of 1-1/8 inches clear between bars.
    g. Manufacturers: One of the following or equal:
        1) McNichols Company.
        2) IKG Borden Industries, IKG Weldforged.
        3) Seidelhuber Metal Products, Inc., Type 19W4.
4. Heavy-Duty Steel Grating:
    a. Heavy-duty type, fabricated from structural steel and designed in accordance with AASHTO Standard Specifications for Highway Bridges, using HS-20 loading.
    b. Hot-dip galvanized after fabrication in accordance with ASTM A 123.
    c. Manufacturers: One of the following or equal:
        1) McNichols Company.
        2) IKG Borden Industries, Heavy Duty Steel Grating.
        3) Seidelhuber Metal Products, Inc., equivalent product.

E. Metal Tread Plate:
    1. Plate having a raised figured pattern on 1 surface to provide improved traction.

F. Preformed Channel Pipe Supports:
    1. Preformed channel pipe supports for pipe supports and other applications are specified in Section 15066.

G. Stairs:
   1. Steel Stairs:
      a. Ships ladders shall conform to local, State, and Occupational Safety and Health Administration Standards as minimum.
      b. Design of Metal Stairs is specified in Section 05511.
      c. Stringers: Structural steel channels or plates.
      d. Treads: See 2.03.A, above
      e. Railings: Aluminum per Section 05520.
      f. Anchors: Welded or bolted brackets designed for support and anchorage at top and bottom.
      g. Finish: Hot-dip galvanized in accordance with ASTM A 123.

H. Miscellaneous Metal:
   1. Miscellaneous Aluminum: Fabricate aluminum products, not covered separately herein, in accordance with the best practices of the trade and field assemble by riveting or bolting. Do not weld or flame cut.
   2. Miscellaneous Cast Iron:
      a. General:
         1) Tough, gray iron, free from cracks, holes, swells, and cold shuts.
         2) Quality such that hammer blow will produce indentation on rectangular edge of casting without flaking metal.
         3) Before leaving the foundry, clean castings and apply 16-mil dry film thickness coating of coal-tar epoxy, unless otherwise specified or indicated on the Drawings.
   3. Miscellaneous Stainless Steel:
      a. Provide miscellaneous stainless steel items not specified herein as indicated on the Drawings or specified elsewhere. Fabricate and install in accordance with the best practices of the trade.
   4. Miscellaneous Structural Steel:
      a. Provide miscellaneous steel items not specified herein as indicated on the Drawings or specified elsewhere. Fabricate and install in accordance with the best practices of the trade.

PART 3 EXECUTION

3.01 EXAMINATION

A. Verification of Conditions: Examine work in place to verify that it is satisfactory to receive the work of this Section. If unsatisfactory conditions exist, do not begin this work until such conditions have been corrected.

3.02 INSTALLATION

A. General: Install products as indicated on the Drawings, and in accordance with shop drawings and manufacturer's printed instructions, as applicable except where specified otherwise.

B. Aluminum Stair Nosing:
   1. Install stair nosings on treads of concrete stairs, including top tread on upper concrete slab.
   2. Omit stair nosings where concrete is submerged.
   3. Coat aluminum surfaces in contact with concrete as specified in Section 09902.

4. Cast stair nosings in fresh concrete, flush with tread and riser faces. Install nosing in center of step approximately 3 inches from each stair edge.

C. Ladders:
1. Secure to supporting surface with bent plate clips providing minimum 8 inches between supporting surface and center of rungs.
2. Where exit from ladder is forward over top rung, extend side rails 3 feet 3 inches minimum above landing, and return the rails with a radius bend to the landing.
3. Where exit from ladder is to side, extend ladder 5 feet 6 inches minimum above landing and rigidly secure at top.
4. Erect rail straight, level, plumb, and true to position indicated on the Drawings. Correct deviations from true line or grade which are visible to the eye.

D. Metal Gratings:
1. General:
a. Allow 1/8-inch maximum clearance between ends of grating and inside face of vertical leg of shelf angles.
b. Horizontal bearing leg of shelf angles shall be 2 inches minimum.
c. Install metal plate or angles where necessary to fill openings at changes in elevation and at openings between equipment and grating.
d. Install angle stops at ends of grating.
e. Installed grating shall not slide out of rebate or off support.
f. Weld stops in place, unless otherwise specified or indicated on the Drawings.
g. Top surfaces of grating sections adjacent to each other shall lie in same plane.

2. Aluminum Grating:
a. Coat surfaces of aluminum shelf angles, rebates, and rod anchors in contact with concrete as specified in Section 09902.
b. Aluminum Grating: Support on aluminum shelf angles or rebates.
3. Steel Grating:
a. Support on hot-dip galvanized structural steel shelf angles or rebates.
4. Heavy-Duty Steel Grating:
a. Support on hot-dip galvanized structural steel rebates embedded and anchored in concrete.
b. Use for roadways, traffic areas, and where indicated on the Drawings.

E. Stairs:
1. General:
a. Install guard railings around stair wells as indicated on the Drawings or specified.

3.03 - 3.10 (NOT USED)

3.11 MEASUREMENT AND PAYMENT

No separate measurement and payment for work performed under this Section. Include cost of same in Contract price bid for work of which this is a component part.

END OF SECTION

SECTION 05511

METAL STAIRS

PART 1 GENERAL

1.01 SUMMARY

A. Furnish all labor, materials, equipment and incidentals required and design, fabricate and install metal pan type stairs as shown on the Drawings and as specified herein.

1.02 RELATED REQUIREMENTS

A. Concrete fill and welded wire fabric reinforcing for stair treads and platforms is included in Section 403S.

B. Handrailings attached to walls and not attached to stair structure are included in Section 05520.

C. Stair nosings are included in Section 05500.

D. Structural steel is included in Section 05120.

E. Guardrails and handrails are included in Section 05520.

F. Grating is included in Division 5.

1.03 REFERENCES

A. American Society for Testing and Materials (ASTM)
   1. ASTM A36 - Standard Specification for Carbon Structural Steel.
   2. ASTM A48 - Standard Specification for Gray Iron Castings.
   3. ASTM A53 - Standard Specification for Pipe, Steel, Black and Hot-Dipped, Zinc-Coated, Welded and Seamless.
   4. ASTM A500 - Standard Specification for Cold-Formed Welded and Seamless Carbon Steel Structural Tubing in Rounds and Shapes.
   5. ASTM A 992 - Standard Specification for Structural Steel Shapes.

B. American Institute of Steel Construction (AISC)
   1. AISC S326 - Specification for the Design, Fabrication and Erection of Structural Steel for Buildings

C. American Welding Society (AWS)
   1. AWS D1.1 - Structural Welding Code Steel.

D. National Association of Architectural Metal Manufacturers (NAAMM)
   1. Metal Stairs Manual.

E. Occupational Safety and Health Administration (OSHA)

F. International Building Code (IBC)

G. Where reference is made to one of the above standards, the revision in effect at the time of bid opening shall apply.

1.04 NOT USED

1.05 SYSTEM DESCRIPTION

A. Fabricated metal pan stairs with concrete-filled treads and intermediate landings and steel pipe railings. Galvanized steel throughout for interior and exterior locations.

1.06 SUBMITTALS

A. Furnish the following in accordance with Specification Section 01300, "Submittals" and Section 01730, "Operation and Maintenance Data".

B. Submit, shop drawings showing the location, size and details of all members, including length and size of all shop and field welds. Each field piece shall be plainly marked with suitable erection marks which shall also be shown on the erection diagram. Shop drawings shall show erection details and welding conditions.

C. Submit for review, structural calculations for the stair system, signed and sealed by a licensed professional engineer registered in the State of Texas.

1.07 QUALITY ASSURANCE

A. Industry Standards: Comply with the provisions of the following standards:
1. AISC S326
2. NAAMM - AMP-510
3. AWS D1.1.

1.08 DELIVERY, STORAGE AND HANDLING

A. All materials shall be delivered promptly so as to cause no delay with other parts of the work. Stored materials shall be placed on skids and not on the ground and shall be piled and blocked up so that they will not become bent or otherwise damaged. Materials shall be handled with cranes or derricks as far as practicable. Material shall not be dumped off cars or trucks nor handled in any other way likely to cause damage. Materials with excessive damage, in the opinion of the Engineer, shall not be incorporated in the work and shall be removed and replaced with new undamaged materials by the Contractor at no expense to the Owner.

1.09 NOT USED

1.10 WARRANTY

A. For warranty repair work, remove and replace materials as needed.

PART 2 PRODUCTS

2.01 DESIGN CRITERIA

A. Stairs and handrailings shall conform to the Uniform Building Code and OSHA Standards for occupancy indicated on the drawings.

B. Design stair assembly to support a minimum live load of 100 lbs/sq ft.

C. Design handrails and railings to meet Uniform Building Code and OSHA Standards and to withstand 200 lbs load applied anywhere on the system and in any direction.

2.02 MATERIALS

A. Metal Surfaces: For fabrication of steel stair work which will be exposed to view, use only materials which are smooth and free of surface blemishes including pitting, seam marks, roller marks, rolled trade names and roughness. Remove blemishes by grinding and/or welding and grinding prior to cleaning, treating and application of surface finishes.

B. Structural Steel Plates, Shapes and Bars: ASTM A36.

C. Hot-Rolled Carbon Steel Sheets and Strips: ASTM A570.

D. Steel Tube/Pipe: ASTM A53, Type S, Grade A and ASTM A500A.

E. Malleable Iron Castings: ASTM A48, Class 30.

F. Shop Primer Paint: Prepare surfaces and epoxy prime as approved, compatible with finish paint confirmed through related technical specifications.

G. Aluminum Handrails and Guardrails: 6361 T6 alloy/temper with fasteners and appurtenances, all as specified in Section 05520.

H. Safety nosings as specified in Section 05500 to be cast into stair pan concrete treads and landings riser nosings at all stairs.

2.03 FABRICATION

A. Size members as required by design calculations and job conditions.

B. Stringers and Headers: Steel channel stringers shall be clip angled to concrete walls, concrete beams, concrete slab edge or steel headers as indicated on the Drawings. Stringers shall furnish support to intermediate landings, unless otherwise indicated on the Drawings.

C. Metal Risers and Treads: Form metal risers and treads of minimum 14-gauge structural sheet steel and shop weld to stringer in an approved manner.

D. Landings: Construct platforms of loose structural steel channels, side-supported headers and miscellaneous framing members framing into the stair stringers. Provide minimum 14-gauge landing decking complete with shop welded reinforcing rods topside and perimeter screed members.

E. Construct stairs to conform to sizes and arrangements indicated; join pieces together by welding unless otherwise indicated. Provide complete stair assemblies including metal framing, hangers, columns, struts, clips, brackets, bearing plates and other components

necessary for the support of stairs and platforms and as required to anchor and contain the stairs on the supporting structure.

F. Fabricate stringers of structural steel channels, or plates, or a combination thereof, as indicated. Provide closures for exposed ends of stringers. Construct platforms of structural steel channel headers and miscellaneous framing members as indicated. Bolt or weld headers to stringers and framing members to stringers and headers. Fabricate and join so that bolts, if used, do not appear on finish surfaces.

G. Metal pan risers, subtreads and subplatforms: Shape metal pans for risers and subtreads to conform to configuration shown. Provide thicknesses of structural steel sheet for metal pans indicated but not less than that required to support total design loading.

H. Attach risers, subtreads and subplatforms to stringers by means of brackets made of steel angles or bars. Weld brackets to stringers and attach metal pans to brackets by welding, or bolting.

I. Form work true to line and level with accurate angles and surfaces and straight sharp edges. Ease exposed edges to radius of approximately 1/32-in. Form bent-metal corners to smallest radius possible without causing grain separation or otherwise impairing work.

J. Weld all assemblies in accordance with recommendations of AWS. Grind all exposed welds to match and blend with adjoining surfaces.

2.05 SURFACE PREPARATION AND SHOP PRIME PAINTING

A. Remove scale, rust and other deleterious materials before applying shop primer. Prepare surfaces and apply one shop coat of metal primer to fabricated metal items as per related Contract Requirement.

PART 3 EXECUTION

3.01 INSTALLATION

A. Provide anchorage devices and fasteners where required and approved for securing steel stair items to in-place construction, including threaded fasteners for concrete inserts, toggle bolts, through-bolts and other connectors. No stair hanging allowed.

B. Perform drilling and fitting for installation of stair work. Set work in location, alignment and elevation plumb and level, true and free of rack, measured with approved shop drawings.

D. Plumb posts of railing in each direction. Secure posts by welding direct to stair stringers, or as otherwise shown or approved.

END OF SECTION

SECTION 05520

ALUMINUM HANDRAILS

PART 1 GENERAL

1.01 SUMMARY

This Section includes the fabrication, furnishing, and installation of aluminum handrails, complete in place, at locations shown on PLANS.

1.02 RELATED REQUIREMENTS (NOT USED)

1.03 REFERENCES

The publications listed below form a part of this Specification to the extent referenced. The publications are referred to in the text by basic designation only.

ALUMINUM ASSOCIATION (AA)

ASD-1	Aluminum Standards and Data
DAF-45	Designation System for Aluminum Finishes
SAA-46	Standards for Anodized Architectural Aluminum

AMERICAN SOCIETY FOR TESTING AND MATERIALS (ASTM)

ASTM A193/A193M	Standard Specification for Ally-Steel and Stainless Steel Bolting Materials for High Temperature Service
ASTM B429	Standard Specification for Aluminum All Extruded Structural Pipe and Tube
ASTM F593	Standard Specification for Stainless Steel Bolts, Hex Cap Screws, and Studs

AMERICAN WELDING SOCIETY (AWS)

AWS D1.2	Structural Welding Code Aluminum

OCCUPATIONAL SAFETY AND HEALTH ADMINISTRATION (OSHA)

29 CFR 1910	OSHA Regulation Safety and Health Standards for General Industry

INTERNATIONAL CONFERENCE OF BUILDING OFFICIALS (ICBO)

IBC	International Building Code (IBC)

1.04 DEFINITIONS

Plans use the terms handrail and guardrail to refer to the railing system defined by this Specification and standard detail drawings.

1.05 SYSTEM DESCRIPTION (NOT USED)

1.06 SUBMITTALS

Submit the following in accordance with Specification Section 01300, "Submittals".

A. Product data for materials used.

B. Complete shop drawings showing handrail locations, railings, posts, splice locations and expansion joint locations. Also include manufacturer's details for connections, anchorage, splices, expansion joints, gates and other pertinent data.

C. Design calculations showing that the material meets or exceeds the allowable working stress under the applied loading conditions. Test reports may be used to complement the design calculations. Design calculations to be sealed by a Professional Engineer licensed in the State of Texas.

D. Field layout of fabricated sections to ensure proper fit during erection, after fabrication and finishing, and prior to shipment.

E. Certificate of Conformance as required in Paragraph 1.07 – Quality Assurance.

1.07 QUALITY ASSURANCE

A. All design computations and detailed drawings are to be prepared by or under the direct supervision of a Professional Engineer licensed in the State of Texas. Provide a certificate signed and sealed by same engineer stating that the computations and drawings are in conformance with specified design criteria.

B. Provide handrail system complying with International Building Code and OSHA Regulations.

1.08 DELIVERY, STORAGE AND HANDLING

A. Deliver handrail to jobsite with sufficient protection to ensure arrival in acceptable and undamaged condition.

B. Store handrails on level supports above ground, not in contact with dissimilar metals. Protect to prevent damage and exposure from elements until erected. Replace or repair damaged sections at no additional cost to OWNER.

1.09 – 1.11 (NOT USED)

PART 2 PRODUCTS

2.01 MANUFACTURER(S)

A. Manufacturer: Products of the following manufacturers, provided they comply with requirements of the Contract Documents, will be among those considered acceptable, or an approved equal.
   1. Hollaender Railing Systems (Interna-Rail);
   2. Thompson Fabrication Co. (TUFrail); and
   3. Alumaguard Corp. (Alumarail).

2.02 MATERIALS AND/OR EQUIPMENT

A. General
   1. Handrail shall be the product of a company normally engaged in the manufacture of pipe railing.
   2. Handrail shall conform to requirements of OSHA 1910.23 and applicable building code. Local building code in Austin, TX is the International Building Code.
   3. Handrail and posts to be fabricated from 1½-inch nominal diameter 6063-T6 or 6061-T6 aluminum pipe, Schedule 40 minimum conforming to ASTM B429. Exposed aluminum surface is to be 0.7-mil thick clear anodized finish, per Aluminum Association Designation M10-C22-A41.
   4. Handrail to be 42 inches high; stair handrail to be 34 inches high, unless other wise noted on PLANS. Centerlines of posts and handrails shall be in same plane. Locate intermediate rails as shown on PLANS.
   5. Unless shown otherwise in PLANS, post spacing not to exceed 5 feet for horizontal handrail and 4 feet for stair handrail (measured horizontally). The manufacturer must reduce the post spacing and/or add dowels, as required to meet the loading requirements.
   6. Provide a 4-inch-high extruded aluminum toe plate that attaches to the posts with clamps that will allow for horizontal expansion and contraction between posts. Toe plate to have not more than 1/4-inch clearance above floor level and provided on all walkways and stair landings. Provide notch in toe plate at post as required to maintain specified clearance.
   7. Handrail system, which consists of three horizontal rail members, posts, connections and anchorages, shall be designed to withstand a 200-pound concentrated load applied at any point and in any direction or a 50 lb/ft uniform load applied in any direction. Concentrated and uniform loads need not be assumed to act concurrently. The posts and associated floor flange anchorage shall be designed to withstand a 200-pound concentrated load applied at the top rail.
   8. Provide expansion joint splices in all rails of handrail and toe board at not greater than 20 feet spacing and at expansion joints in concrete structure. Minimum projection of expansion splice inside adjacent pipe shall be 1½″. The joint gap shall be sized, when installed, to provide a maximum of 0.75” gap at seasonal cold temperatures. Remove sharp edge from ends of handrails at joint.
   9. Splices and expansion joints in the railing system components shall be located within 8 inches of posts or other railing system supports.
   10. Provide 1/4-inch weep holes at low points in all handrails and posts to prevent trapping of moisture.
   11. Removable handrail to have vertical pipe supports fastened as shown on PLANS. Unless otherwise indicated, fabricate removable handrail in unit sections not exceeding 10 feet long with at least three vertical supports, including one at each end.

12. Handrails attached to load-bearing walls to be mounted with aluminum or stainless steel brackets. Fasten each bracket with a minimum 3/8-inch diameter Type 316 stainless steel expansion bolt set into the wall and tapped into bracket. Bracket to have a 3-inch projection from wall and be uniformly spaced approximately 4 feet with the end brackets not more than 12 inches from the ends of the handrails.
13. Posts and rails to be continuous throughout their sectional lengths. Curved members shall be formed to true radii, free from dye marks or surface abrasions. Furnish handrail in shop fabricated sections, complete with accessories, including gates, hardware, closure caps for rail terminations, base trim, and anchorages.
14. Posts shall not interrupt the continuation of the top rail at any point along the railing, including corners and end terminations (OSHA 1910.23). The top surface of the top railing shall be smooth and shall not be interrupted by a projecting fitting.
15. Aluminum surfaces in contact with concrete, grout or dissimilar metals will be protected with a mylar isolator, bituminous paint or other approved material.
16. Handrail system posts are to be anchored to concrete structures with Type 316 stainless steel bolts. Bolts and floor flange shall be designed to resist a 200-pound load applied horizontally to the top rail. Bolt manufacturer's published shear and pullout values shall be reduced for spacing and edge distance conditions as shown on plans.
17. Safety Chains: Construct safety chains of stainless steel, straight link type, 3/16-inch diameter, with at least twelve links per foot, and with boat type snap hooks on each end. Provide S.S. 3/8-inch bolt with 3/4 -inch eye diameter for attachment of chain, anchored as indicated. Supply a minimum of two chains or as noted on PLANS, 4 inches longer than the anchorage spacing, for each guarded area. Locate safety chain where indicated.

B. Non-welded Aluminum Handrails
1. Fittings to be extruded or cast aluminum, 6063 Aluminum Alloy with a minimum 0.4-mil thick clear anodized finish per Aluminum Association Designation M43C22A4l.
2. The handrail shall be made of pipes joined together with component fittings. Components that are glued or pop-riveted at the joints will not be acceptable. All components must be mechanically fastened with stainless steel hardware.
3. Fitting shall be an internal double-prong expandable fitting that is activated by a stainless steel or aluminum set screw. The fitting shall be externally connected to the pipe by means of an anodized aluminum tubular rivet nut, and stainless steel socket head cap screw. All fittings, elbows, wall returns, and caps to be flush-type. Exposed fasteners are to be set flush or recessed. All fasteners shall be Type 316 stainless steel.
4. Unless otherwise noted on PLANS, all handrails to be non-welded aluminum.

C. Welded Aluminum Handrail
1. Handrail and posts to be joined by welding only if indicated on PLANS. Welding to consist of flush-type weld fittings or coping of pipe ends to conform with adjoining pipe and welding. Welds shall be ground smooth and flush.
2. Elbows, capped terminations, and wall returns to be formed by flush fittings. Secure rails terminating against masonry or concrete with flanged fittings and anchor bolts.

2.03 FABRICATION

Furnish railings in shop-fabricated sections, complete with accessories, including gates, plated hardware, closure caps for rail termination, base trim, and anchorages.

2.04 SOURCE QUALITY CONTROL (NOT USED)

PART 3 EXECUTION

3.01 - 3.02 (NOT USED)

3.03 ERECTION/INSTALLATION/APPLICATION AND/OR CONSTRUCTION

A. Handrail to be installed by fabricator in strict compliance with fabricator's instructions. Install handrail plumb and within a tolerance of 1/4-inch maximum deviation either side of the longitudinal centerline. Cuts shall be clean and straight, free from burrs and nicks.

B. Posts embedded in concrete to be set in sleeves with quick-setting non-shrink grout.

C. Install removable and permanent handrail units with bolted floor type flanges.

D. Use of shims, washers, wedges, or similar devices are not allowed when plumbing or aligning handrail.

3.04 - 3.10 (NOT USED)

3.11 MEASUREMENT AND PAYMENT

No separate measurement or payment for work performed under this Section. Include cost of same in Contract price bid for work of which this is a component part.

END OF SECTION

THIS PAGE IS LEFT BLANK INTENTIONALLY

SECTION 05530

ACCESS HATCHES

PART 1 - GENERAL

1.01 SUMMARY

A. This Section includes the furnishing and installation of access hatches.

1.02 RELATED REQUIREMENTS (NOT USED)

1.03 REFERENCES

The publications listed below form a part of this Specification to the extent referenced. The publications are referred to in the text by basic designation only.

AMERICAN SOCIETY FOR TESTING AND MATERIALS (ASTM)

ASTM A193/A193M	Standard Specification for Alloy-Steel and Stainless Steel Bolting Materials for High-Temperature Service
ASTM B209	Standard Specification for Aluminum and Aluminum-Alloy Sheet and Plate
ASTM B211	Standard Specification for Aluminum and Aluminum-Alloy Bar, Rod, and Wire
ASTM B316/B316M	Standard Specification for Aluminum and Aluminum-Alloy R and Cold-Heading Wire and Rods

FEDERAL SPECIFICATIONS (FS)

FS TT-C-494B	Coating Compound, Bituminous, Solvent Type, Acid Resistant
FS TT-P-645B	Primer, Paint, Zinc-Molybdate, Alkyd Type

1.04 DEFINITIONS (NOT USED)

1.05 PERFORMANCE REQUIREMENTS

A. Structural Requirements: Design and install work of this Section, including attachment to the structure, to safely withstand live load of 300 lb/ft^2 with a maximum deflection of $1/150^{th}$ of the span.

1.06 SUBMITTALS

A. Provide the following in accordance with Section 01300, “Submittals”:
   1. Product Data: Manufacturer’s specifications, standard details, and installation recommendations.
   2. Shop Drawings: Submit edited product data or shop drawings, or a combination thereof, as required to accurately describe products to be provided. Show elevations, field measurements, reinforcement, anchorages, expansion provisions, installation accessories, and detail sections of composite members.

PART 2 - PRODUCTS

2.01 MATERIALS

A. Aluminum Sheet: ASTM B209; alloy and temper to suit specified finishes.

B. Hardware: Type 316 stainless steel hardware throughout.

C. Fasteners:
1. For attachment of roof accessories to supporting structure: stainless steel.
2. For aluminum: Made from the following, according to roof accessory manufacturer's standard practice:
   a. Stainless steel: ASTM A193, B8 series.
   b. Aluminum: ASTM B211, alloy 2024-T4 for threaded fasteners; ASTM B316 for rivets.
3. For dissimilar metals: Stainless steel, ASTM A193, B8 series.

D. Structural Supports and Reinforcements: Aluminum; alloy and temper to suit installation.

E. Isolation Coatings:
1. Zinc molybdate alkyd primer: FS TT-P-645.
2. Bituminous coating: FS TT-C-494, Type II.

2.02 FINISHES

A. Mill Finish: As fabricated, with welds cleaned and dressed and exposed welds ground smooth. Remove oil, grease, dirt, and weld spatter from finished units.

2.03 ACCESS HATCHES

A. Manufacturer: Products of the following manufacturers, provided they comply with requirements of the Contract Documents, will be among those considered acceptable:
1. The Bilco Company.
2. Halliday Products.

B. Access Hatches:
1. Provide the following types in locations indicated on PLANS:
   a. Single leaf for equipment access.
   b. Double leaf for equipment access.
2. Size(s): Refer to PLANS for sizes.
3. Metal cover: Mill finish sheet aluminum; 1/4 inch thick, diamond pattern plate to withstand a live load of 300 lb/ft^2 with a maximum deflection of $1/150^{th}$ of the span.
4. Hardware: Stainless steel, Type 316 to include:
   a. Latch mechanism with inside red vinyl covered handles.
   b. Heavy forged aluminum or stainless steel hinges with each having a minimum 3/8″ diameter Type 316 stainless steel pins.
   c. Flush lift mechanism.
   d. Hold-open arm, set to hold cover at 90 degrees, with detent release.
5. Operator: Removal key wrench.
6. Two rows of stainless steel safety chain on all double-door hatches.
7. Accessories: Furnish each hatch with a fall protection net. Fall protection net to be Hatchnet 121 by Safe Approach or equal. Furnish fall protection net with 304 stainless steel attachment hardware. If net is not attached to access hatch frame, furnish 304 stainless steel hardware for attaching the net to the structure in accordance with the net manufacturer's recommendation.

PART 3 - EXECUTION

3.01 EXAMINATION

A. Verify that substrates and openings are rigidly set, at proper lines and elevation, properly sized, and ready to receive units.

B. Do not proceed with installation until conditions detrimental to proper installation have been corrected.

C. Coordinate installation with roofing work and other adjacent elements of building envelope to ensure watertight construction.

3.02 PREPARATION

A. Coat contact surfaces of dissimilar metals with one or more coats of isolation coating.
   1. The following metals are not considered dissimilar: aluminum, stainless steel, cadmium, and zinc.

B. Apply one 15-mil dry film thickness coat of bituminous isolation coating to metal surfaces other than galvanized steel which will be in contact with cementitious materials.

3.03 INSTALLATION

A. Install products in accordance with manufacturer's instructions, except where more stringent requirements are shown or specified, and except where project conditions require extra precautions or provisions to ensure satisfactory performance of the work.

B. Install products in correct location, plumb and true, without warp or twist.

3.04 CLEANING AND PROTECTION

A. Install rigid protective cover, not plastic, on access hatch to protect hatch during concrete casting and construction activity.

B. Touch up marred or abraded areas of finished elements. If satisfactory touch-up cannot be accomplished, remove and replace element.

3.05 - 3.10 (NOT USED)

3.11 MEASUREMENT AND PAYMENT

No separate measurement or payment for work performed under this Section. Include cost of same in Contract price bid for work of which this is a component part.

END OF SECTION

THIS PAGE IS LEFT BLANK INTENTIONALLY

SECTION 06100

ROUGH CARPENTRY

PART 1 GENERAL

1.01 SUMMARY

A. Furnish all labor, materials, equipment and incidentals required and install all items of rough carpentry work complete as shown on the Drawings and as specified herein.

B. Set in place all pressed metal frames which are to be built into walls. Install pressed metal frames which are to be installed in concrete openings. Install hollow metal doors and finish hardware furnished under other Sections.

1.02 RELATED REQUIREMENTS

A. Other related work as called for on PLANS or specified elsewhere in this or other TECHNICAL SPECIFICATION Sections.

1.03 REFERENCES

A. The publications listed below form a part of this Specification to the extend referenced. The publications are referred to in the text by basic designations only.

AMERICA WOOD PRESERVERS ASSOCIATION (AWPA)

B. AWPA P5 Waterborne Preservatives AWWA C507

NATIONAL ELECTRICAL MANUFACTURERS ASSOCIATION (NEMA)

C. NEMA LD3 High-Pressure Decorative Laminates

1.04 – 1.10 (NOT USED)

PART 2 PRODUCTS

2.01 MATERIALS - ROUGH CARPENTRY

A. All lumber shall be of sound stock, delivered dry and shall be fully protected at all times from injury and dampness. Split, broken, or otherwise damaged pieces will not be allowed in the work.

B. Wood for blocking and nailers shall be seasoned, 19 percent maximum moisture content, Construction Grade quality and of Douglas Fir; Southern Pine or Ponderosa Pine species.
   1. Wood members that will contact masonry or concrete shall be vacuum-pressure treated with 100 percent oxide pure chromated copper arsenate meeting AWPA P-5. Minimum net retention of solid preservative shall be 0.40 lbs/cu ft.
   2. All treatment shall be performed in accordance with the requirements of AWPA for treating wood. Apply a heavy coat of the same preservative used in treating to all surfaces cut after treatment.

C. Nails, spikes, bolts, nuts and washers where sizes are not indicated or specified, shall be of suitable size and number as approved to securely fasten and hold members in place. Hot dip galvanize after fabrication.

2.02 – 2.04 (NOT USED)

PART 3 EXECUTION

3.01 INSTALLATION

A. All rough carpentry shall be accurately cut, fitted and installed as detailed.

B. Anchors shall be installed, where indicated or required, to anchor carpentry or other items securely to masonry or concrete.

C. Forms for structural concrete work shall be as specified under Division 3. Provide all other miscellaneous wood formwork as may be required for the completion of the work.

D. Temporary wood doors and cloth or transparent plastic covered frames shall be provided for exterior wall openings during winter construction and to protect adjacent occupied, existing or finished spaces.

E. Installation of Hollow Metal Doors and Finish Hardware.

1. Doors and finish hardware will be furnished under Division 8 and shall be installed under the work of this Section, except where specifically designated otherwise herein.
2. As soon as the hardware is delivered to the job site, receive, verify and check each set and report to the Engineer any defect or shortage. Give notice to the hardware supplier for all such items that may be defective or missing. Provide a receipt to the hardware supplier for all such items as are found to be correct.
3. Finish hardware, after checking, shall be the responsibility of the Contractor until it is installed and the project is accepted in its entirety by the Owner.
4. Hardware shall be attached and placed by skilled mechanics in accordance with approved hardware templates provided with the hardware and shall be accurately fitted and adjusted. Lever handles shall be kept covered with heavy cloth and other hardware shall be protected from damage until final acceptance of the entire project by the Owner.
5. Set each edge and joint of threshold in a seal strip of polyurethane sealant. Grout remainder of threshold in mortar.
6. Adjust and check each operating item of hardware and each door, to ensure proper operation or function of every unit. Lubricate moving parts with type lubrication recommended by manufacturer (graphite-type if no other recommended). Replace units that cannot be adjusted and lubricated to operate freely and smoothly as intended for the application made.
7. Wherever hardware installation is made more than 1 month prior to acceptance or occupancy of a space or area, return to the work during the week prior to acceptance or occupancy and make a final check and adjustment of all hardware items in such space or area. Clean and relubricate operating items as necessary to restore proper function and finish of hardware and doors. Adjust door control devices to compensate for final operation of heating and ventilating equipment.

3.02 –3.10 (NOT USED)

3.11 MEASUREMENT AND PAYMENT

Unless otherwise indicated, no separate measurement or payment for work performed under this Section. Include cost of same in Contract price bid for work of which this is a component part.

END OF SECTION

SECTION 07542A

POLYVINYL-CHLORIDE ROOFING OVER CONCRETE DECK

PART 1 GENERAL

1.0 SCOPE OF WORK

A. Contractor shall prepare concrete deck to be clear of all debris and uneven surface finish.

B. Contractor shall furnish and install a Duro-Last approved separation slip sheet over the concrete deck.

C. Contractor shall furnish and mechanically install a Duro-Last white, 50 mil single-ply membrane roofing system that is fabricated of a weft inserted, low-shrink, anti-wicking polyester fabric and has a thermoplastic coating of PVC material laminated to both sides as manufactured by Duro-Last Roofing, Inc. to attain a 20-year NDL Warranty (15+5), or approved equal roofing system. Contractor shall install membrane by fastening every **12" O.C, each way**. Contractor to follow all Duro-Last published specifications.

D. Contractor shall terminate roof edge using the 4" 2PC compression edge that is manufactured by Exceptional Metal Inc., and as shown on Drawings. Contractor to follow all Duro-Last published specifications.

E. Contractor shall remove any and all debris from rooftop and dispose of properly on a daily basis to keep jobsite clear of clutter.

1.1 SECTION INCLUDES

A. Duro-Last® PVC thermoplastic membrane attached with mechanical fasteners.

B. Duro-Blue™ slip sheet, loosely laid.

C. Prefabricated flashings, corners, parapets, stacks, vents, and related details.

D. Fasteners, adhesives, and other accessories required for a complete roofing installation.

E. Traffic Protection.

1.2 REFERENCES

A. NRCA - The NRCA Roofing and Waterproofing Manual.

B. ASCE 7 - Minimum Design Loads For Buildings And Other Structures.

C. UL - Roofing Materials and Systems Directory, Roofing Systems (TGFU.R10128).

D. ASTM D 751 - Standard Test Methods for Coated Fabrics.

E. ASTM D 4434 - Standard Specification for Poly(Vinyl Chloride) Sheet Roofing.

F. ASTM E 108 - Standard Test Methods for Fire Tests of Roof Coverings.

G. ASTM E 119 - Standard Test Methods for Fire Tests of Building Construction and Materials.

1.3 SYSTEM DESCRIPTION

A. General: Provide installed roofing membrane and base flashings that remain watertight; do not permit the passage of water; and resist specified uplift pressures, thermally induced movement, and exposure to weather without failure.

B. Material Compatibility: Provide roofing materials that are compatible with one another under conditions of service and application required, as demonstrated by roofing membrane manufacturer based on testing and field experience.

C. Physical Properties:

1. Roof product must meet the requirements of Type III PVC sheet roofing as defined by ASTM D 4434 and must meet or exceed the following physical properties.
2. Thickness: 50 mil, nominal, in accordance with ASTM D 751.
3. Thickness Over Scrim: ≥ 28 mil in accordance with ASTM D 751.
4. Breaking Strengths: ≥ 390 lbf. (MD) and ≥ 438 lbf. (XMD) in accordance with ASTM D 751, Grab Method.
5. Elongation at Break: ≥ 31% (MD) and ≥ 31% (XMD) in accordance with ASTM D 751, Grab Method.
6. Heat Aging in accordance with ASTM D 3045: 176 °F for 56 days. No sign of cracking, chipping or crazing. (In accordance with ASTM D 4434).
7. Factory Seam Strength: ≥ 417 lbf. in accordance with ASTM D 751, Grab Method.
8. Tearing Strength: ≥ 132 lbf. (MD) and ≥ 163 lbf. (XMD) in accordance with ASTM D 751, Procedure B.
9. Low Temperature Bend (Flexibility): Pass at -40 °F in accordance with ASTM D 2136.
10. Accelerated Weathering: No cracking, checking, crazing, erosion or chalking after 5,000 hours in accordance with ASTM G 154.
11. Linear Dimensional Change: < 0.5% in accordance with ASTM D 1204 at 176 ± 2 °F for 6 hours.
12. Water Absorption: < 1.7% in accordance with ASTM D 570 at 158 °F for 166 hours.
13. Static Puncture Resistance: ≥ 56 lbs. in accordance with ASTM D 5602.
14. Dynamic Puncture Resistance: ≥ 14.7 ft-lbf. in accordance with ASTM D 5635.

D. Cool Roof Rating Council (CRRC):

1. Membrane must be listed on CRRC website.
   a. Initial Solar Reflectance: ≥ 88%
   b. Initial Thermal Emittance: ≥ 87%
   c. Initial Solar Reflective Index (SRI): ≥ 111
   d. 3-Year Aged Solar Reflectance: ≥ 68%
   e. 3-Year Aged Thermal Emittance: ≥ 84%
   f. 3-Year Aged Solar Reflective Index (SRI): ≥ 82

1.4 SUBMITTALS

A. Submit under provisions of Section 01300.

B. Duro-Last data sheets on each product to be used, including:

1. Preparation instructions and recommendations.
2. Storage and handling requirements and recommendations.
3. Installation methods.
4. Maintenance requirements.

C. Shop Drawings: Indicate overall membrane layout, field seam locations, joint or termination detail conditions, and location of fasteners.

D. Verification Samples: For each product specified, two samples, representing actual product, color, and finish.

1. 4 inch by 6 inch sample of roofing membrane, of color specified.
2. 4 inch by 6 inch sample of walkway pad.
3. Termination bar, fascia bar with cover, drip edge and gravel stop if to be used.
4. Each fastener type to be used for installing membrane, termination bar and edge details.

E. Installer Certification: Certification from the roofing system manufacturer that Installer is approved, authorized, or licensed by manufacturer to install roofing system.

F. Manufacturer's warranties.

1.5 QUALITY ASSURANCE

A. Perform work in accordance with manufacturer's installation instructions.

B. Manufacturer Qualifications: A manufacturer specializing in the production of PVC membranes systems and utilizing a Quality Control Manual during the production of the membrane roofing system that has been approved by and is inspected by Underwriters Laboratories.

C. Installer Qualifications: Company specializing in installation of roofing systems similar to those specified in this project and approved by the roofing system manufacturer.

D. Source Limitations: Obtain components for membrane roofing system from roofing membrane manufacturer.

E. There shall be no deviations from the roof membrane manufacturer's specifications or the approved shop drawings without the prior written approval of the manufacturer.

1.6 REGULATORY REQUIREMENTS

A. Conform to applicable code for roof assembly wind uplift and fire hazard requirements.

B. Fire Exposure: Provide membrane roofing materials with the following fire-test-response characteristics. Materials shall be identified with appropriate markings of applicable testing and inspecting agency.

1. Exterior Fire-Test Exposure:

a. Class A; ASTM E 108, for application and roof slopes indicated.

2. Fire-Resistance Ratings: Comply with ASTM E 119 for fire-resistance-rated roof assemblies of which roofing system is a part.

3. Conform to applicable code for roof assembly fire hazard requirements.

C. Wind Uplift:

1. Roofing System Design: Provide a roofing system designed to resist uplift pressures calculated according to the current edition of the ASCE-7 Specification *Minimum Design Loads for Buildings And Other Structures*.

1.7 PRE-INSTALLATION MEETING

A. Convene meeting not less than one week before starting work of this section.

B. Review methods and procedures related to roof deck construction and roofing system including, but not limited to, the following.

1. Meet with Owner, Architect, Owner's insurer if applicable, testing and inspecting agency representative, roofing installer, roofing system manufacturer's representative, deck installer, and installers whose work interfaces with or affects roofing including installers of roof accessories and roof-mounted equipment.

2. Review and finalize construction schedule and verify availability of materials, installer's personnel, equipment, and facilities needed to make progress and avoid delays.

3. Examine deck substrate conditions and finishes for compliance with requirements, including flatness and fastening.

4. Review structural loading limitations of roof deck during and after roofing.

5. Review base flashings, special roofing details, roof drainage, roof penetrations, equipment curbs, and condition of other construction that will affect roofing system.

6. Review governing regulations and requirements for insurance and certificates if applicable.

7. Review temporary protection requirements for roofing system during and after installation.

8. Review roof observation and repair procedures after roofing installation.

1.8 DELIVERY, STORAGE AND HANDLING

A. Deliver roofing materials to Project site in original containers with seals unbroken and labeled with manufacturer's name, product brand name and type, date of manufacture, and directions for storing and mixing with other components.

B. Store liquid materials in their original undamaged containers in a clean, dry, protected location and within the temperature range required by roofing system manufacturer. Protect stored liquid material from direct sunlight.

C. Store roof materials and place equipment in a manner to avoid permanent deflection of deck.

D. Store and dispose of solvent-based materials, and materials used with solvent-based materials, in accordance with requirements of local authorities having jurisdiction.

1.9 WARRANTY

A. Contractor's Warranty: The contractor shall warrant the roof application with respect to workmanship and proper application for two (2) years from the effective date of the warranty issued by the manufacturer.

B. Manufacturer's Warranty: Must provide for completion of repairs, replacement of membrane or total replacement of the roofing system at the then-current material and labor prices throughout the life of the warranty. In addition the warranty must meet the following criteria:

1. Warranty Period: 20 years from date issued by the manufacturer.
2. First 15 years:
   a. Must provide for completion of repairs, replacement of membrane or total replacement of the roofing system at the then-current material and labor prices.
   b. No exclusions for incidental or consequential damages.
3. Last 5 years:
   a. Excludes incidental and consequential damages.
4. Must provide positive drainage (no ponding water).
5. No exclusion for damage caused by biological growth.
6. Issued direct from and serviced by the roof membrane manufacturer.
7. Transferable for the full term of the warranty.

PART 2 PRODUCTS

2.1 MANUFACTURER

A. Manufacturer: Duro-Last Roofing, Inc., which is located at: 525 Morley Drive, Saginaw, MI 48601. Telephone: 800-248-0280.

B. All roofing system components to be provided or approved by Duro-Last Roofing, Inc.

C. Substitutions: Approved equal roofing system.

2.2 ROOFING SYSTEM COMPONENTS

A. Roofing Membrane: Duro-Last® PVC thermoplastic membrane conforming to ASTM D 4434, type III, fabric-reinforced, PVC, NSF/ANSI 347 Gold or Platinum Certification, and a product-specific third-party verified Environmental Product Declaration. Membrane properties as follows:

1. Thickness:
   a. 50 mil.
2. Exposed Face Color:
   a. White.
3. Minimum recycle content 7% post-industrial and 0% post-consumer.
4. Recycled at end of life into resilient flooring or concrete expansion joints.

B. Accessory Materials: Provide accessory materials supplied by or approved for use by Duro-Last Roofing, Inc.

1. Sheet Flashing: Manufacturer's standard reinforced PVC sheet flashing.
2. Duro-Last Factory Prefabricated Flashings: manufactured using Manufacturer's standard reinforced PVCmembrane.

a. Stack Flashings.

b. Curb Flashings.

c. Inside and Outside Corners.

3. Sealants and Adhesives: Compatible with roofing system and supplied by Duro-Last Roofing, Inc.

   a. Duro-Caulk® Plus.

   b. Strip Mastic.

4. Slip Sheet: Compatible with roofing system and supplied by Duro-Last Roofing, Inc.

   a. Duro-Blue™ Slip Sheet.

5. Fasteners and Plates: Factory-coated steel fasteners and metal or plastic plates meeting corrosion-resistance provisions in FMG 4470, designed for fastening membrane to substrate. Supplied by Duro-Last Roofing, Inc.

   a. Concrete Screws.

   b. Poly Plates.

   c. Cleat Plates.

   d. 3 inch Metal Plates.

6. PV Anchors

7. Termination and Edge Details: Supplied by Duro-Last Roofing, Inc.

   a. Termination Bar.

   b. Universal 2-Piece Compression Metal System.

8. Vinyl Coated Metal: Supplied by Duro-Last Roofing, Inc. 24 gauge, hot-dipped galvanized, grade 90 metal with a minimum of 17 mil of Duro-Last membrane laminated to one side.

9. Two-Way Roof Vents: Supplied by Duro-Last Roofing, Inc. Install a minimum of 1 vent for each 1,000 ft^2 (93 m^2) of roof area.

C. Slip Sheet:

   1. Duro-Blue™.

D. Walkways:

   1. Provide non-skid, maintenance-free walkway pads in areas of heavy foot traffic and around mechanical equipment.

      a. Duro-Last Roof Trak® III Walkway Pad.

PART 3 EXECUTION

3.1 EXAMINATION

A. Verify that the surfaces and site conditions are ready to receive work.

B. Verify that the deck is supported and secured.

C. Verify that the deck is clean and smooth, free of depressions, waves, or projections, and properly sloped to drains, valleys, eaves, scuppers or gutters.

D. Verify that the deck surfaces are dry and free of standing water, ice or snow.

E. Verify that all roof openings or penetrations through the roof are solidly set.

F. If substrate preparation is the responsibility of another contractor, notify Architect of unsatisfactory preparation before proceeding.

3.2 PREPARATION

A. Clean surfaces thoroughly prior to installation.

B. Prepare surfaces using the methods recommended by the manufacturer for achieving the best result for the substrate under the project conditions.

C. Surfaces shall be clean, smooth, free of fins, sharp edges, loose and foreign material, oil, grease, and bitumen.

3.3 INSTALLATION

A. Install separation Slip Sheet: Duro-Blue™ slip sheet.

   1. Install in accordance with the roof manufacturer's requirements.

B. Roof Membrane: 50 mil, Duro-Last® PVC thermoplastic membrane.

   1. Use only fasteners, stress plates and fastening patterns accepted for use by the roof manufacturer. Fastening patterns must meet the applicable design requirements.

   2. Install fasteners in accordance with the roof manufacturer's requirements. Fasteners that are improperly installed shall be replaced or corrected.

   3. Mechanically fasten membrane to the structural concrete deck utilizing fasteners and fastening patterns that in accordance with the roof manufacturer's requirements.

   4. Cut membrane to fit neatly around all penetrations and roof projections.

   5. Unroll roofing membrane and positioned with a minimum 6 inch overlap.

C. Seaming:

   1. Weld overlapping sheets together using hot air. Minimum weld width is 1-1/2 inches.

   2. Check field welded seams for continuity and integrity and repair all imperfections by the end of each work day.

D. Membrane Termination/Securement: All membrane terminations shall be completed in accordance with the membrane manufacturer's requirements.

   1. Provide securement at all membrane terminations at the perimeter of each roof level, roof section, curb flashing, skylight, expansion joint, interior wall, penthouse, and other similar condition.

   2. Provide securement at any angle change where the slope or combined slopes exceeds two inches in one horizontal foot.

E. Flashings: Complete all flashings and terminations as indicated on the drawings and in accordance with the membrane manufacturer's requirements.

1. Provide securement at all membrane terminations at the perimeter of each roof level, roof section, curb flashing, skylight, expansion joint, interior wall, penthouse, and other similar condition.
    a. Do not apply flashing over existing thru-wall flashings or weep holes.
    b. Secure flashing on a vertical surface before the seam between the flashing and the main roof sheet is completed.
    c. Extend flashing membrane a minimum of 6 inches (152 mm) onto the main roof sheet beyond the mechanical securement.
    d. Use care to ensure that the flashing does not bridge locations where there is a change in direction (e.g. where the parapet meets the roof deck).
2. Penetrations:
    a. Flash all pipes, supports, soil stacks, cold vents, and other penetrations passing through the roofing membrane as indicated on the Drawings and in accordance with the membrane manufacturer's requirements.
    b. Utilize custom prefabricated flashings supplied by the membrane manufacturer.
    c. Existing Flashings: Remove when necessary to allow new flashing to terminate directly to the penetration.
3. Pipe Clusters and Unusual Shapes:
    a. Clusters of pipes or other penetrations which cannot be sealed with prefabricated membrane flashings shall be sealed by surrounding them with a prefabricated vinyl-coated metal pitch pan and sealant supplied by the membrane manufacturer.
    b. Vinyl-coated metal pitch pans shall be installed, flashed and filled with sealant in accordance with the membrane manufacturer's requirements.
    c. Pitch pans shall not be used where prefabricated or field fabricated flashings are possible.

F. Edge Details:
1. Provide edge details as indicated on the Drawings. Install in accordance with the membrane manufacturer's requirements.
2. Join individual sections in accordance with the membrane manufacturer's requirements.
3. Coordinate installation of metal flashing and counter flashing as needed.
4. Manufactured Roof Specialties: Coordinate installation of copings, counter flashing systems, gutters, downspouts, and roof expansion assemblies to form a complete working system.

G. Walkways:
1. Install walkways in accordance with the membrane manufacturer's requirements.
2. Provide walkways where indicated on the Drawings.
3. Install walkway pads at roof hatches, access doors, rooftop ladders and all other traffic concentration points regardless of traffic frequency. Provided in areas receiving regular traffic to service rooftop units or where a passageway over the surface is required.
4. Do not install walkways over flashings or field seams until manufacturer's warranty inspection has been completed.

H. Water cut-offs:
1. Provide water cut-offs on a daily basis at the completion of work and at the onset of inclement weather.
2. Provide water cut-offs to ensure that water does not flow beneath the completed sections of the new roofing system.

3. Remove water cut-offs prior to the resumption of work.
4. The integrity of the water cut-off is the sole responsibility of the roofing contractor.
5. Any membrane contaminated by the cut-off material shall be cleaned or removed.

3.4 FIELD QUALITY CONTROL

A. The membrane manufacturer's representative shall provide a comprehensive final inspection after completion of the roof system. All application errors shall be addressed and final punch list completed.

3.5 PROTECTION

A. Protect installed roofing products from construction operations until completion of project.
B. Where traffic is anticipated over completed roofing membrane, protect from damage using durable materials that are compatible with membrane.
C. Repair or replace damaged products after work is completed.

END OF SECTION

THIS PAGE IS LEFT BLANK INTENTIONALLY

SECTION 07542B

POLYVINYL-CHLORIDE ROOFING OVER STEEL DECK

PART 1 GENERAL

1.0 SCOPE OF WORK

A. Contractor shall prepare steel deck surface to be clear of all debris.

B. Contractor shall install 2 layers of 2.2" polyisocyanurate insulation, as manufactured by Duro-Guard® Insulation, fastening in accordance with membrane manufacturer' specifications.

C. Contractor shall furnish and mechanically install a Duro-Last white, 50 mil single-ply membrane roofing system that is fabricated of a weft inserted, low-shrink, anti-wicking polyester fabric and has a thermoplastic coating of PVC material laminated to both sides as manufactured by Duro-Last Roofing, Inc. to attain a 20-year NDL Warranty (15+5), or approved equal roofing system. Contractor shall install membrane by fastening every 12" O.C, each way. Contractor to follow all Duro-Last published specifications.

D. Contractor shall terminate roof edge using the 4" 2PC compression edge that is manufactured by Exceptional Metal Inc., and as shown on Drawings. Contractor to follow all Duro-Last published specifications.

E. Contractor shall remove any and all debris from rooftop and dispose of properly on a daily basis to keep jobsite clear of clutter.

1.1 SECTION INCLUDES

A. Duro-Last® PVC thermoplastic membrane attached with mechanical fasteners.

B. Duro-Guard® ISO II (flat), attached with mechanical fasteners.

C. Prefabricated flashings, corners, parapets, stacks, vents, and related details.

D. Fasteners, adhesives, and other accessories required for a complete roofing installation.

E. Traffic Protection.

1.2 REFERENCES

A. NRCA - The NRCA Roofing and Waterproofing Manual.

B. ASCE 7 - Minimum Design Loads For Buildings And Other Structures.

C. UL - Roofing Materials and Systems Directory, Roofing Systems (TGFU.R10128).

D. ASTM C 1289 - Standard Specification for Faced Rigid Cellular Polyisocyanurate Thermal Insulation Board.

E. ASTM D 751 - Standard Test Methods for Coated Fabrics.

F. ASTM D 4434 - Standard Specification for Poly (Vinyl Chloride) Sheet Roofing.

G. ASTM E 108 - Standard Test Methods for Fire Tests of Roof Coverings.

H. ASTM E 119 - Standard Test Methods for Fire Tests of Building Construction and Materials.

1.3 SYSTEM DESCRIPTION

A. General: Provide installed roofing membrane and base flashings that remain watertight; do not permit the passage of water; and resist specified uplift pressures, thermally induced movement, and exposure to weather without failure.

B. Material Compatibility: Provide roofing materials that are compatible with one another under conditions of service and application required, as demonstrated by roofing membrane manufacturer based on testing and field experience.

C. Physical Properties:

1. Roof product must meet the requirements of Type III PVC sheet roofing as defined by ASTM D 4434 and must meet or exceed the following physical properties.
2. Thickness: 50 mil, nominal, in accordance with ASTM D 751.
3. Thickness Over Scrim: ≥ 28 mil in accordance with ASTM D 751.
4. Breaking Strengths: ≥ 390 lbf. (MD) and ≥ 438 lbf. (XMD) in accordance with ASTM D 751, Grab Method.
5. Elongation at Break: ≥ 31% (MD) and ≥ 31% (XMD) in accordance with ASTM D 751, Grab Method.
6. Heat Aging in accordance with ASTM D 3045: 176 °F for 56 days. No sign of cracking, chipping or crazing. (In accordance with ASTM D 4434).
7. Factory Seam Strength: ≥ 417 lbf. in accordance with ASTM D 751, Grab Method.
8. Tearing Strength: ≥ 132 lbf. (MD) and ≥ 163 lbf. (XMD) in accordance with ASTM D 751, Procedure B.
9. Low Temperature Bend (Flexibility): Pass at -40 °F in accordance with ASTM D 2136.
10. Accelerated Weathering: No cracking, checking, crazing, erosion or chalking after 5,000 hours in accordance with ASTM G 154.
11. Linear Dimensional Change: < 0.5% in accordance with ASTM D 1204 at 176 ± 2 °F for 6 hours.
12. Water Absorption: < 1.7% in accordance with ASTM D 570 at 158 °F for 166 hours.
13. Static Puncture Resistance: ≥ 56 lbs. in accordance with ASTM D 5602.
14. Dynamic Puncture Resistance: ≥ 14.7 ft-lbf. in accordance with ASTM D 5635.

D. Cool Roof Rating Council (CRRC):

1. Membrane must be listed on CRRC website.
   a. Initial Solar Reflectance: ≥ 88%

b. Initial Thermal Emittance: ≥ 87%

c. Initial Solar Reflective Index (SRI): ≥ 111

d. 3-Year Aged Solar Reflectance: ≥ 68%

e. 3-Year Aged Thermal Emittance: ≥ 84%

f. 3-Year Aged Solar Reflective Index (SRI): ≥ 82

E. Insulation

1. Provide overall thermal resistance for roofing system as follows:

a. Minimum Thickness: 2.2 inch.

2. Install using a minimum of two layers.

3. Configuration as indicated on the Drawings.

1.4 SUBMITTALS

A. Submit under provisions of Section 01300.

B. Duro-Last data sheets on each product to be used, including:

1. Preparation instructions and recommendations.

2. Storage and handling requirements and recommendations.

3. Installation methods.

4. Maintenance requirements.

C. Shop Drawings: Indicate insulation pattern, overall membrane layout, field seam locations, joint or termination detail conditions, and location of fasteners.

D. Verification Samples: For each product specified, two samples, representing actual product, color, and finish.

1. 4 inch by 6 inch sample of roofing membrane, of color specified.

2. 4 inch by 6 inch sample of walkway pad.

3. Termination bar, fascia bar with cover, drip edge and gravel stop if to be used.

4. Each fastener type to be used for installing membrane, insulation/recover board, termination bar and edge details.

E. Installer Certification: Certification from the roofing system manufacturer that Installer is approved, authorized, or licensed by manufacturer to install roofing system.

F. Manufacturer's warranties.

1.5 QUALITY ASSURANCE

A. Perform work in accordance with manufacturer's installation instructions.

B. Manufacturer Qualifications: A manufacturer specializing in the production of PVC membranes systems and utilizing a Quality Control Manual during the production of the

membrane roofing system that has been approved by and is inspected by Underwriters Laboratories.

C. Installer Qualifications: Company specializing in installation of roofing systems similar to those specified in this project and approved by the roofing system manufacturer.

D. Source Limitations: Obtain components for membrane roofing system from roofing membrane manufacturer.

E. There shall be no deviations from the roof membrane manufacturer's specifications or the approved shop drawings without the prior written approval of the manufacturer.

1.6 REGULATORY REQUIREMENTS

A. Conform to applicable code for roof assembly wind uplift and fire hazard requirements.

B. Fire Exposure: Provide membrane roofing materials with the following fire-test-response characteristics. Materials shall be identified with appropriate markings of applicable testing and inspecting agency.

1. Exterior Fire-Test Exposure:

a. Class A; ASTM E 108, for application and roof slopes indicated.

2. Fire-Resistance Ratings: Comply with ASTM E 119 for fire-resistance-rated roof assemblies of which roofing system is a part.

3. Conform to applicable code for roof assembly fire hazard requirements.

C. Wind Uplift:

1. Roofing System Design: Provide a roofing system designed to resist uplift pressures calculated according to the current edition of the ASCE-7 Specification *Minimum Design Loads for Buildings And Other Structures*.

1.7 PRE-INSTALLATION MEETING

A. Convene meeting not less than one week before starting work of this section.

B. Review methods and procedures related to roof deck construction and roofing system including, but not limited to, the following.

1. Meet with Owner, Architect, Owner's insurer if applicable, testing and inspecting agency representative, roofing installer, roofing system manufacturer's representative, deck installer, and installers whose work interfaces with or affects roofing including installers of roof accessories and roof-mounted equipment.

2. Review and finalize construction schedule and verify availability of materials, installer's personnel, equipment, and facilities needed to make progress and avoid delays.

3. Examine deck substrate conditions and finishes for compliance with requirements, including flatness and fastening.

4. Review structural loading limitations of roof deck during and after roofing.

5. Review base flashings, special roofing details, roof drainage, roof penetrations, equipment curbs, and condition of other construction that will affect roofing system.
6. Review governing regulations and requirements for insurance and certificates if applicable.
7. Review temporary protection requirements for roofing system during and after installation.
8. Review roof observation and repair procedures after roofing installation.

1.8 DELIVERY, STORAGE AND HANDLING

A. Deliver roofing materials to Project site in original containers with seals unbroken and labeled with manufacturer's name, product brand name and type, date of manufacture, and directions for storing and mixing with other components.

B. Store liquid materials in their original undamaged containers in a clean, dry, protected location and within the temperature range required by roofing system manufacturer. Protect stored liquid material from direct sunlight.

C. Protect roof insulation materials from physical damage and from deterioration by sunlight, moisture, soiling, and other sources. Store in a dry location. Comply with insulation manufacturer's written instructions for handling, storing, and protecting during installation.

D. Store roof materials and place equipment in a manner to avoid permanent deflection of deck.

E. Store and dispose of solvent-based materials, and materials used with solvent-based materials, in accordance with requirements of local authorities having jurisdiction.

1.9 WARRANTY

A. Contractor's Warranty: The contractor shall warrant the roof application with respect to workmanship and proper application for two (2) years from the effective date of the warranty issued by the manufacturer.

B. Manufacturer's Warranty: Must provide for completion of repairs, replacement of membrane or total replacement of the roofing system at the then-current material and labor prices throughout the life of the warranty. In addition the warranty must meet the following criteria:

1. Warranty Period: 20 years from date issued by the manufacturer.
2. First 15 years:
   a. Must provide for completion of repairs, replacement of membrane or total replacement of the roofing system at the then-current material and labor prices.
   b. No exclusions for incidental or consequential damages.
3. Last 5 years:
   a. Excludes incidental and consequential damages.
4. Must provide positive drainage (no ponding water).
5. No exclusion for damage caused by biological growth.

6. Issued direct from and serviced by the roof membrane manufacturer.
7. Transferable for the full term of the warranty.

PART 2 PRODUCTS

2.1 MANUFACTURER

A. Manufacturer: Duro-Last Roofing, Inc., which is located at: 525 Morley Drive, Saginaw, MI 48601. Telephone: 800-248-0280.

B. All roofing system components to be provided or approved by Duro-Last Roofing, Inc.

C. Substitutions: Approved equal roofing system**.**

2.2 ROOFING SYSTEM COMPONENTS

A. Roofing Membrane: Duro-Last® PVC thermoplastic membrane conforming to ASTM D 4434, type III, fabric-reinforced, PVC, NSF/ANSI 347 Gold or Platinum Certification, and a product-specific third-party verified Environmental Product Declaration. Membrane properties as follows:

1. Thickness:
   a. 50 mil.
2. Exposed Face Color:
   a. White.
3. Minimum recycle content 7% post-industrial and 0% post-consumer.
4. Recycled at end of life into resilient flooring or concrete expansion joints.

B. Accessory Materials: Provide accessory materials supplied by or approved for use by Duro-Last Roofing, Inc.

1. Sheet Flashing: Manufacturer's standard reinforced PVC sheet flashing.
2. Duro-Last Factory Prefabricated Flashings: manufactured using Manufacturer's standard reinforced PVCmembrane.
   a. Stack Flashings.
   b. Curb Flashings.
   c. Inside and Outside Corners.
3. Sealants and Adhesives: Compatible with roofing system and supplied by Duro-Last Roofing, Inc.
   a. Duro-Caulk® Plus.
   b. Strip Mastic.
4. Fasteners and Plates: Factory-coated steel fasteners and metal or plastic plates meeting corrosion-resistance provisions in FMG 4470, designed for fastening membrane and insulation to substrate. Supplied by Duro-Last Roofing, Inc.
   a. #14 Heavy Duty Fasteners.
   b. Poly Plates.

c. Cleat Plates.

d. Insulation Plates.

e. 3 inch Metal Plates.

5. PV Anchors

6. Termination and Edge Details: Supplied by Duro-Last Roofing, Inc.

a. Termination Bar.

b. Universal 2-Piece Compression Metal System.

7. Vinyl Coated Metal: Supplied by Duro-Last Roofing, Inc. 24 gauge, hot-dipped galvanized, grade 90 metal with a minimum of 17 mil of Duro-Last membrane laminated to one side.

8. Two-Way Roof Vents: Supplied by Duro-Last Roofing, Inc. Install a minimum of 1 vent for each 1,000 ft² (93 m²) of roof area.

C. Walkways:

1. Provide non-skid, maintenance-free walkway pads in areas of heavy foot traffic and around mechanical equipment.

a. Duro-Last Roof Trak® III Walkway Pad.

2.3 ROOF INSULATION

A. General:

1. Provide preformed roof insulation boards that comply with requirements and referenced standards, as selected from manufacturer's standard sizes.

2. Provide preformed saddles, crickets, and other insulation shapes where indicated for sloping to drain. Fabricate to slopes indicated.

B. Polyisocyanurate Board Insulation: Complying with ASTM C 1289, Type II, felt or glass-fiber mat facer on both major surfaces. Material as supplied by Duro-Last.

1. Duro-Guard® ISO II (flat).

2. Duro-Guard® ISO II (flat).

2.4 ROOF INSULATION ACCESSORIES

A. General: Provide roof insulation accessories approved by the roof membrane manufacturer and as recommended by insulation manufacturer for the intended use.

B. Fasteners: Provide Duro-Last factory-coated steel fasteners and metal or plastic plates meeting corrosion-resistance provisions in FMG 4470, designed for fastening insulation and/or insulation cover boards in conformance to specified design requirements.

PART 3 EXECUTION

3.1 EXAMINATION

A. Verify that the surfaces and site conditions are ready to receive work.

B. Verify that the deck is supported and secured.

C. Verify that the deck is clean and smooth, free of depressions, waves, or projections, and properly sloped to drains, valleys, eaves, scuppers or gutters.

D. Verify that the deck surfaces are dry and free of standing water, ice or snow.

E. Verify that all roof openings or penetrations through the roof are solidly set.

F. If substrate preparation is the responsibility of another contractor, notify Architect of unsatisfactory preparation before proceeding.

3.2 PREPARATION

A. Clean surfaces thoroughly prior to installation.

B. Prepare surfaces using the methods recommended by the manufacturer for achieving the best result for the substrate under the project conditions.

C. Surfaces shall be clean, smooth, free of fins, sharp edges, loose and foreign material, oil, grease, and bitumen.

3.3 INSTALLATION

A. Install insulation in accordance with the roof manufacturer's requirements.

B. Insulation: Duro-Guard® ISO II (flat).

1. Install insulation in accordance with the roof manufacturer’s requirements.
2. Insulation shall be adequately supported to sustain normal foot traffic without damage.
3. Where field trimmed, insulation shall be fitted tightly around roof protrusions with no gaps greater than ¼ inch.
4. No more insulation shall be applied than can be covered with the roof membrane by the end of the day or the onset of inclement weather.
5. If more than one layer of insulation is used, all joints between subsequent layers shall be offset by at least 6 inches.
6. Mechanical Attachment: Use only fasteners, stress plates and fastening patterns accepted for use by the roof manufacturer. Fastening patterns must meet applicable design requirements.
   a. Install fasteners in accordance with the roof manufacturer’s requirements. Fasteners that are improperly installed must be replaced or corrected.
7. Mechanically attach Duro-Guard® ISO II (flat) insulation boards in parallel courses with end joints staggered 50% and adjacent boards butted together with no gaps greater than ¼ inch.

C. Roof Membrane: 50 mil, Duro-Last® PVC thermoplastic membrane.

1. Use only fasteners, stress plates and fastening patterns accepted for use by the roof manufacturer. Fastening patterns must meet the applicable design requirements.
2. Install fasteners in accordance with the roof manufacturer’s requirements. Fasteners that are improperly installed shall be replaced or corrected.

3. Mechanically fasten membrane to the structural deck utilizing fasteners and fastening patterns that in accordance with the roof manufacturer's requirements.
4. Cut membrane to fit neatly around all penetrations and roof projections.
5. Unroll roofing membrane and positioned with a minimum 6 inch overlap.

D. Seaming:

1. Weld overlapping sheets together using hot air. Minimum weld width is 1-1/2 inches.
2. Check field welded seams for continuity and integrity and repair all imperfections by the end of each work day.

E. Membrane Termination/Securement: All membrane terminations shall be completed in accordance with the membrane manufacturer's requirements.

1. Provide securement at all membrane terminations at the perimeter of each roof level, roof section, curb flashing, skylight, expansion joint, interior wall, penthouse, and other similar condition.
2. Provide securement at any angle change where the slope or combined slopes exceeds two inches in one horizontal foot.

F. Flashings: Complete all flashings and terminations as indicated on the drawings and in accordance with the membrane manufacturer's requirements.

1. Provide securement at all membrane terminations at the perimeter of each roof level, roof section, curb flashing, skylight, expansion joint, interior wall, penthouse, and other similar condition.
   a. Do not apply flashing over existing thru-wall flashings or weep holes.
   b. Secure flashing on a vertical surface before the seam between the flashing and the main roof sheet is completed.
   c. Extend flashing membrane a minimum of 6 inches (152 mm) onto the main roof sheet beyond the mechanical securement.
   d. Use care to ensure that the flashing does not bridge locations where there is a change in direction (e.g. where the parapet meets the roof deck).
2. Penetrations:
   a. Flash all pipes, supports, soil stacks, cold vents, and other penetrations passing through the roofing membrane as indicated on the Drawings and in accordance with the membrane manufacturer's requirements.
   b. Utilize custom prefabricated flashings supplied by the membrane manufacturer.
   c. Existing Flashings: Remove when necessary to allow new flashing to terminate directly to the penetration.
3. Pipe Clusters and Unusual Shapes:
   a. Clusters of pipes or other penetrations which cannot be sealed with prefabricated membrane flashings shall be sealed by surrounding them with a prefabricated vinyl-coated metal pitch pan and sealant supplied by the membrane manufacturer.
   b. Vinyl-coated metal pitch pans shall be installed, flashed and filled with sealant in accordance with the membrane manufacturer's requirements.

c. Pitch pans shall not be used where prefabricated or field fabricated flashings are possible.

G. Edge Details:

1. Provide edge details as indicated on the Drawings. Install in accordance with the membrane manufacturer's requirements.
2. Join individual sections in accordance with the membrane manufacturer's requirements.
3. Coordinate installation of metal flashing and counter flashing specified in Section 07620.
4. Manufactured Roof Specialties: Coordinate installation of copings, counter flashing systems, gutters, downspouts, and roof expansion assemblies to form a complete working roof system.

H. Walkways:

1. Install walkways in accordance with the membrane manufacturer's requirements.
2. Provide walkways where indicated on the Drawings.
3. Install walkway pads at roof hatches, access doors, rooftop ladders and all other traffic concentration points regardless of traffic frequency. Provided in areas receiving regular traffic to service rooftop units or where a passageway over the surface is required.
4. Do not install walkways over flashings or field seams until manufacturer's warranty inspection has been completed.

I. Water cut-offs:

1. Provide water cut-offs on a daily basis at the completion of work and at the onset of inclement weather.
2. Provide water cut-offs to ensure that water does not flow beneath the completed sections of the new roofing system.
3. Remove water cut-offs prior to the resumption of work.
4. The integrity of the water cut-off is the sole responsibility of the roofing contractor.
5. Any membrane contaminated by the cut-off material shall be cleaned or removed.

3.4 FIELD QUALITY CONTROL

A. The membrane manufacturer's representative shall provide a comprehensive final inspection after completion of the roof system. All application errors shall be addressed and final punch list completed.

3.5 PROTECTION

A. Protect installed roofing products from construction operations until completion of project.

B. Where traffic is anticipated over completed roofing membrane, protect from damage using durable materials that are compatible with membrane.

C. Repair or replace damaged products after work is completed.

END OF SECTION

THIS PAGE IS LEFT BLANK INTENTIONALLY

SECTION 07920

JOINT SEALANTS

PART 1 GENERAL

1.01 SUMMARY

A. Furnish all materials, labor, equipment and incidentals required and perform all sealants, joint fillers, gaskets and related work necessary for the proper completion of the project as shown on the Drawings and as specified herein.

1.02 RELATED REQUIREMENTS

A. Other related work as called for on PLANS or specified elsewhere in this or other TECHNICAL SPECIFICATION Sections.

1.03 REFERENCE STANDARDS

American Society for Testing and Materials (ASTM)

ASTM C790 Use of Latex Sealing Compounds.

ASTM C804 Use of Solvent Release Type Sealants.

ASTM C834 Standard Specification for Latex Sealants.

ASTM C920 Standard Specification for Elastomeric Joint Sealants.

ASTM C1193 Standard Guide for Use of Joint Sealants.

ASTM D395 Standard Test Methods for Rubber Property - Compression Set.

ASTM D412 Standard Test Methods for Vulcanized Rubber and Thermoplastic Rubbers and Thermoplastic Elastomers - Tension.

ASTM D573 Standard Test Method for Rubber-Deterioration in an Air Oven.

ASTM D695 Standard Test Method for Compressive Properties of Rigid Plastics.

ASTM D790 Standard Test Methods for Flexural Properties of Unreinforced and Reinforced Plastics and Electrical Insulating Materials.

ASTM D1002 Standard Test Method for Apparent Shear Strength of Single-Lap-Joint Adhesively Bonded Metal Specimens by Tension Loading (Metal to Metal).

ASTM D1056 Standard Specification for Flexible Cellular Materials – Sponge or Expanded Rubber.

ASTM D1149 Standard Test Method for Rubber Deterioration - Surface Ozone Cracking in a Chamber.

ASTM D1565 Standard Specification for Flexible Cellular Materials – Vinyl Chloride Polymers and Copolymers (Open Cell Foam).

ASTM D1667 Standard Specification for Flexible Cellular Materials – Vinyl Chloride Polymers and Copolymers (Closed Cell Foam).

ASTM D1708 Standard Test Method for Tensile Properties of Plastics by Use of Microtensile Specimens

ASTM D2240 Standard Test Method for Rubber Property - Durometer Hardness.

ASTM D2628 Standard Specification for Preformed Polychloroprene Elastomeric Joint Seals for Concrete Pavements.

SWRI – (Sealant, Waterproofing, and Restoration Institute)

Sealant and Caulking Guide Specification.

Federal Specifications (FS)

FS HH-F-341 Fillers, Expansion Joint; Bituminous (Asphalt and Tar) And Nonbituminous (Preformed For Concrete)

The Society for Protective Coatings (SSPC)

SSPC SP-10 Surface Preparation Specification No. 10 Near-White Blast Cleaning.

Where reference is made to one of the above standards, the revision in effect at the time of bid opening shall apply.

1.04 NOT USED

1.05 NOT USED

1.06 SUBMITTALS

A. Furnish the following in accordance with Specification Section 01300, “Submittals” and Section 01730, “Operation and Maintenance Data”.
   1. Submit product data including detailed product information and colors on materials proposed and material installation methods. Submittals shall include the following:
      a. Two sets of special colored sealant samples in representative quantities
      b. Two sets of representative samples of any or all other proposed materials required for the work of this Section as requested by the Engineer.

1.07 QUALITY ASSURANCE

A. Perform work in accordance with sealant manufacturer’s requirements for preparation of surfaces and materials installation instructions.

1.08 NOT USED

1.09 NOT USED

1.10 WARRANTY

A. Submit manufacturer’s standard written warranty agreeing to repair or replace components which appear to have failed in general durability or any other form of apparent deterioration (excluding inherent qualities and limitations clearly specified in the manufacturer’s data which was submitted).

B. Complete installation shall be warranted jointly and severally, on a single document, by the materials manufacturer and the Contractor, against defects of materials and workmanship, as defined on the warranty.

1.11 QUALIFICATIONS

A. Manufacturer: Company specializing in manufacturing products specified in this section with minimum three years documented experience.

B. Applicator: Company specializing in performing Work of this section with minimum three years documented experience.

1.12 ENVIRONMENTAL REQUIREMENTS

A. Maintain Temperature and humidity recommended by sealant manufacturer during and after installation.

1.13 APPLICATION SCHEDULE

A. Caulk all exterior wall joints, between adjacent materials, joints between frames or louvers and adjacent materials, copings, and all other joints shown on the Drawings or required for the completion of the work. Joints noted as "caulk", "caulking", or "sealant," shall be caulked as specified herein.

B. Caulk all interior joints between frames and masonry, at tops of masonry walls, between masonry and structural concrete, floor joints in tile, joints in rooms to be airtight and all other joints shown on the Drawings or required for the completion of the work.

C. Compressible Filler at conditions indicated on the Drawings or requiring compressible filler for sealant or caulking installation.

D. Expansion Joint Seals at conditions indicated on the Drawings

E. Waterproof Joint Filler at exterior conditions and at conditions with continuous water immersion.

PART 2 PRODUCTS

2.01 MATERIALS

A. Caulking and Sealants

1. All colors for caulking above grade in the superstructure of the building shall be selected by the Engineer.
2. Exterior and interior sealant for joints on the horizontal plane - **Type A** - shall be a two part, pour grade polyurethane base self-leveling Polytok sealant by Toch Brothers, Inc.; Tremco; Sonneborn or equal. Primer shall be as recommended by the manufacturer.
3. Exterior and interior sealant for joints on all other surfaces – **Type B** - shall be a one part, gun grade, polysulphide base non-sag Thiotok Sealant R.M. by Toch Brothers, Inc.; Pecora; Sonneborn or equal. Primer shall be as recommended by the manufacturer.
4. Exterior Metal Lap Joint Sealant: **Type C** - Butyl rubber and polyisobutylene blend, non-drying, non-skinning, non-curing. Use for concealed sealant bead in sheet metal work and concealed sealant bead in siding overlaps. Tremco Butyl Sealant.
5. Sealant for Continuous Water Immersion: **Type D** - Polyurethane; ASTM C920, Grade NS, Class 25, Uses M and A; approved by manufacturer for continuous water immersion; multi-component. Tremco Vulkem 922.

6. Silicone Sealant: **Type E** - ASTM C920, Grade NS, Class 25, Uses NT, A, M, G and O; single component, neutral curing, non-sagging, non-staining, mildew resistant, non-bleeding. Movement Capability; plus and minus 25 percent. Service Temperature Range: -65 to 180 degrees F. Tremco, Spectrem 3.
7. General Purpose Interior Sealant: **Type F** - Acrylic emulsion latex; ASTM C834, single component, paintable. Tremco, Tremflex 834.
8. Joint backing for joints in superstructure shall be approved closed cell polyethylene rods of diameters to suit joint conditions.

B. Compressible filler shall be foamed polyurethane strip saturated with polybutylene waterproofing material. When compressed to 50 percent of its original volume, filler shall hold a head of 6-ft of water, and a head of 10-ft of water when compressed 60 percent. Filler shall maintain its resiliency to allow for installation in temperatures as slow as 40 degrees F. Filler shall remain waterproof at 50 percent compression between temperatures of minus 40 and 200 degrees F. Elongation shall be at least 325 percent with a tensile strength of not less than 53 psi.

1. The polybutylene compound shall not migrate in the polyurethane strip. Compressible filler shall be Polytite by Sandell Manufacturing Company; Combriband by Secoa Corporation, Division of Phoenix Building Products, Inc. or equal.

C. Watertight Joint Filler

1. Joint Material - Closed-cell, cross linked ethylene vinyl acetate with a resistance to weather oxidation.
   a. Compression and recovery: The load required to compress a specimen to 50 percent of its thickness before the test shall not be less than 10 or more than 60 psi. Upon removal of the test, the material shall recover at least 95 percent of its original thickness in 24 hours.
   b. Extrusion - A specimen shall be compressed to 50 percent of its original thickness with three of its edges restrained. The amount of extrusion of the free edge shall not exceed 0.25-in.
   c. Elongation - 25 degrees minimum at 0 degree F.
   d. Density - 2.8 to 3.4 lbs/cu ft.
   e. Water Absorption - A standard test specimen with four square cut edges, when submerged horizontally under 1-in of water at 70 degrees F plus 5 degrees shall absorb not more than 3.5 percent weight by volume of water in 24 hours.
   f. Weather Test: FS HH-341a, Type 1 Standard Class A, No visible signs of deterioration.
   g. Dimensional Variation:
      1) 0 to 0.1181 thick plus 20 percent, minus 10 percent
      2) 0.1181 to 0.2362 thick plus 15 percent, minus 5 percent
      3) 0.2362 up plus 10 percent, minus 2 percent
2. Bonding agent - Two-component epoxy resin bonder that meets all requirements for bonding concrete to concrete, concrete to steel, concrete to wood and other materials as recommended by the manufacturer. Unmixed properties as follows:
   a. Tensile: ASTM D1708, crosshead speed (0.05 ipm)
   b. Age: C77 degrees F - 7 days
   c. Tensile Strength: 3,900 psi
   d. Elongation at break: 5.5 to 6.0 percent
   e. Tensile Modulus: 1.4×10^5 psi
   f. Flexural: ASTM D790, Procedure B, crosshead speed (0.015 ipm) 2-in span.
   g. Mixed properties shall be as follows:
      1) Compressive: ASTM D695, crosshead speed (0.05 ipm)
      2) Compressive Strength, 7 day: 14,500 psi

3) Bond Strength, 24 hours: 650 psi
4) Adhesive (Tensile Shear), 7 days: ASTM D1002, 1,800 psi

3. Evasote Joint System by E-Poxy Industries, Inc. or equal.

D. Accessories: As recommended by the sealant and caulking manufacturer including, but not limited to the following;
1. Primer: Non-staining type to suit application.
2. Joint Cleaner: Non-Corrosive and non-staining type, recommended by sealant manufacturer; compatible with joint forming materials.
3. Joint Backing: As indicated elsewhere in these specifications or round foam rod compatible with sealant; ASTM D1667, closed cell PVC; oversized 50 percent larger than joint width.
4. Bond Breaker: Pressure sensitive tape recommended by sealant manufacturer to suit application.

PART 3 EXECUTION

3.01 INSTALLATION

A. Installation of Caulking and Sealants
1. All joints to receive sealant shall be cleaned, primed, back filled and caulked in complete accordance with the manufacturer's instructions.
2. Sealant shall be applied generally to a square section configuration. Minimum depth of joint shall be 1/4-in and maximum 1/2-in. For joints greater than 1/2-in wide, provide sealant in a 2 to 1 width-to-depth ratio.
3. The surfaces of all materials adjoining caulked joints shall be cleaned free of all smears of sealant or other soiling due to caulking operations.
4. Perform installation in accordance with ASTM C1193.
5. Install bond breaker where joint backing is not used.
6. Install sealant free of air pockets, foreign embedded matter, ridges, and sags.
7. Tool joints slightly concave.
8. Clean adjacent soiled surfaces.

B. Installation of Expansion Joint Seals
1. Expansion joint seals shall be installed at the vertical expansion joints where detailed.
2. All surfaces to receive adhesive that are in contact with the seal shall be free from dirt, water, oil, rust, frost and loose debris.
3. Joint sides shall be constructed straight and parallel with no sharp edges.
4. Installation should not be done when temperatures are above 75 or below 40 degrees F.
5. The exterior of the joint shall be flush with the surrounding construction.

C. Installation of Compressible filler
1. Install compressible filler according to the manufacturer's written instructions for the situation where it is used.

D. Installation of Waterproof Joint Filler
1. Surface preparation
a. Concrete
1) Cleaned free of old existing coatings
2) Cured 28 days minimum
3) Dry preferred, moisture only if approved by the Engineer for difficult site conditions
4) Cleaned of dirt
5) Completely remove oil, grease and wax
6) Acid etch surface only when surface pH is over 10

7) Sandblast to clean and remove sharp edges or protrusions

b. Steel

1) Sandblast: SSPC SP-10

2) Immediately apply bonder after sandblast cleaning

2. Bonder application

a. Power caulking gun

b. Trowel

c. Hand application with rubber gloves

d. Apply enough bonder so that it is squeezed out of the joint area when the filler is pressed together. Normally this will be 6 to 12 mils thick.

3. Environmental Conditions

a. Apply at temperatures above minus 10 degrees F on dry surfaces only.

b. Apply at temperatures above 32 degrees F on moist surfaces.

3.02 SCHEDULE

A. Schedule indicates only some of the major items requiring sealant and is not intended to be all inclusive.

1. Window Perimeter: Type E.
2. Door Frame to Walls Exterior: Type E.
3. Door Frame to Walls Interior: Type F.
4. Window Frames to Walls Interior: Type F.
5. Concrete Joints Vertical: Type B.
6. Concrete Joints Horizontal: Type A.
7. Water Immersion Joints: Type D.
8. Control and Expansion Joints in Paving: Type A.
9. Control and Expansion Joints in Masonry and between Masonry and Adjacent Work: Type E.
10. Lap Joints in Exterior Sheet Metal Work: Type C.
11. Butt Joints in Exterior Metal Work and Siding: Type C.
12. Under Exterior Door Thresholds: Type C.
13. Interior Joints for which no other Sealant is indicated: Type F.
14. Control and Expansion Joint in Interior Concrete Slabs and Floors: Type A.

3.03 –3.10 (NOT USED)

3.11 MEASUREMENT AND PAYMENT

Unless otherwise indicated, no separate measurement or payment for work performed under this Section. Include cost of same in Contract price bid for work of which this is a component part.

END OF SECTION

SECTION 08110

STEEL DOORS AND FRAMES

PART 1 GENERAL

1.01 SUMMARY

A. Extent of standard steel doors and frames is indicated and scheduled on drawings.
   1. This work includes:
      a. Interior and exterior steel doors and frames.
   2. Drawing and Scheduling Designations: This section applies to doors and frames referenced on the drawings and schedules using the terms "Hollow Metal Door", "Hollow Metal Frame", "Steel Door" and "Steel Frame".

B. Finish hardware is specified elsewhere in Division-8.

C. Glass and glazing in doors is specified elsewhere in Division-8.

D. Sealants used during installation of doors is specified in Division-7.

1.02 RELATED REQUIREMENTS

A. Other related work as called for on PLANS or specified elsewhere in this or other TECHNICAL SPECIFICATION Sections.

1.03 – 1.04 NOT USED

1.06 SUBMITTALS

A. Furnish the following in accordance with Specification Section 01300, “Submittals” and Section 01730, “Operation and Maintenance Data”.
   1. Shop Drawings: Submit for fabrication and installation of steel doors and frames. Include details of each frame type, elevations of door design types, conditions at openings, details of construction, location and installation requirements of finish hardware and reinforcements, and details of joints and connections. Show anchorage and accessory items.
   2. Provide schedule of doors and frames using same reference numbers for details and openings as those on contract drawings.
      a. Indicate coordinate of glazing frames and stops with glass and glazing requirements.

1.07 QUALITY ASSURANCE

A. Provide doors and frames complying with Steel Door Institute "Recommended Specifications: Standard Steel Doors and Frames" (SDI-100) and as herein specified.

B. Fire-Rated Door Assemblies: Where fire-rated door assemblies are indicated or required, provide fire-rated door and frame assemblies that comply with NFPA 80 "Standard for Fire Doors and Windows", and have been tested, listed, and labeled in accordance with ASTM E 152 "Standard Methods of Fire Tests of Door Assemblies" by a nationally recognized independent testing and inspection agency acceptable to authorities having jurisdiction.

1.08 DELIVERY, STORAGE AND HANDLING

A. Deliver hollow metal work cartoned or crated to provide protection during transit and job storage. Provide additional sealed plastic wrapping for factory-finished doors.

B. Inspect hollow metal work upon delivery for damage. Minor damages may be repaired provided refinished items are equal in all respects to new work and acceptable to Architect; otherwise, remove and replace damaged items as directed.

C. Store doors and frames at building site under cover. Place units on minimum 4" high wood blocking. Avoid use of non-vented plastic or canvas shelters which could create humidity chamber. If cardboard wrapper on door becomes wet, remove carton immediately. Provide 1/4" spaces between stacked doors to promote air circulation.

1.09 WARRANTY

A. Furnish five year manufacturer warranty.

B. For warranty repair work, remove and replace materials as needed.

PART 2 PRODUCTS

2.01 ACCEPTABLE MANUFACTURERS

A. Available Manufacturers: Subject to compliance with requirements, manufacturers offering steel doors and frames which may be incorporated in the work include; but are not limited to, the following:
   1. Ceco Corp.
   2. Curries Mfg., Inc.
   3. Deansteel, Mfg., Inc.
   4. Tex-Steel Corp.
   5. Substitutions: See Section 00700 – General Conditions.

2.02 MATERIALS

A. Hot-Rolled Steel Sheets and Strip: Commercial quality carbon steel, pickled and oiled, complying with ASTM A 569 and ASTM A 568.

B. Cold-Rolled Steel Sheets: Commercial quality carbon steel, complying with ASTM A 366 and ASTM A 568.

C. Galvanized Steel Sheets: Zinc-coated carbon steel sheets of commercial quality, complying with ASTM A 526, with ASTM A 525, G60 zinc coating, mill phosphatized.

D. Supports and Anchors: Fabricate of not less than 18-gage galvanized sheet steel.

E. Inserts, Bolts, and Fasteners: Manufacturer's standard units, except hot-dip galvanize items to be built into exterior walls, complying with ASTM A 153, Class C or D as applicable.

F. Shop Applied Paint:
   1. Primer: Rust-inhibitive enamel or paint, either air-drying or baking, suitable as a base for specified finish paints.

2.03 FABRICATION, GENERAL

A. Fabricate steel door and frame units to be rigid, neat in appearance and free from defects, warp or buckle. Wherever practicable, fit and assemble units in manufacturer's

plant. Clearly identify work that cannot be permanently factory-assembled before shipment, to assure proper assembly at project site. Comply with SDI-100 requirements as follows:

1. Interior Doors: SDI-100, Type II, heavy-duty, Style 2, minimum 18-gage faces; and where indicated Type FG per SDI-106.
2. Exterior Doors: SDI-100, Type III, extra heavy-duty, Style 2, minimum 16-gage galvanized steel faces; and where indicated, Type FG per SDI-106.

B. Fabricate exposed faces of doors and panels, including stiles and rails of nonflush units, from only cold-rolled steel.

C. Fabricate frames, concealed stiffeners, reinforcement, edge channels, louvers and moldings from either cold-rolled or hot- rolled steel (at fabricator's option).

D. Exposed Fasteners: Unless otherwise indicated, provide countersunk flat Phillips heads for exposed screws and bolts.

E. Thermal-Rated (Insulating) Assemblies:

1. At exterior locations and elsewhere as shown or scheduled, provide doors which have been fabricated as thermal insulating door and frame assemblies and tested in accordance with ASTM C 236.
2. Unless otherwise indicated, provide thermal-rated assemblies with U factor of 0.24 Btu/(hr x ft sq x deg.F) or better.

F. Finish Hardware Preparation: Prepare doors and frames to receive mortised and concealed finish hardware in accordance with final Finish Hardware Schedule and templates provided by hardware supplier. Comply with applicable requirements of ANSI A115 series specifications for door and frame preparation for hardware.

G. Frame Construction: Fabricate frames to shape shown.

1. Fabricate frames with mitered or coped and continuously welded corners and seamless face joints.
2. Provide welded frames with temporary spreader bars.
3. Interior Door Frames: 16 gage steel.
4. Exterior Door Frames: 14 gage galvanized steel, with prime coat for field painting.
5. Glazed Lights: Non-removable stops on non-secure side; size and configurations as indicated on the drawings.

H. Reinforce doors and frames to receive surface-applied hardware. Drilling and tapping for surface-applied finish hardware may be done at project site.

I. Locate finish hardware as indicated on final shop drawings or, if not indicated, in accordance with "Recommended Locations for Builder's Hardware", published by Door and Hardware Institute.

J. Shop Painting:

1. Clean, treat, and paint exposed surfaces of steel door and frame units, including galvanized surfaces.
2. Clean steel surfaces of mill scale, rust, oil, grease, dirt, and other foreign materials before application of paint.
3. Apply shop coat of prime paint of even consistency to provide a uniformly finished surface ready to receive field-applied finish paint.

2.04 STANDARD STEEL DOORS

A. Provide metal doors of types and styles indicated on drawings or schedules.

B. Coordinate steel doors with adjacent work as required to assure proper installation.

2.05 STANDARD STEEL FRAMES

A. Provide metal frames for doors, borrowed lights, and other openings, of types and styles as shown on drawings and schedules. Conceal fastenings, unless otherwise indicated. Fabricate frames of minimum 16-gage cold-rolled furniture steel.
   1. Fabricate frames with mitered and welded corners.
   2. Form exterior frames of hot-dip galvanized steel.

B. Door Silencers: Except on weather-stripped frames, drill stops to receive 3 silencers on strike jambs of single-swing frames and 2 silencers on heads of double-swing frames.

C. Plaster Guards: Provide 26-gage steel plaster guards or mortar boxes, welded to frame, at back of finish hardware cutouts where mortar or other materials might obstruct hardware operation and to close off interior of openings.

PART 3 EXECUTION

3.01 DOOR INSTALLATION

A. General: Install standard sheet doors, frames, and accessories in accordance with final shop drawings, manufacturer's data, and as herein specified.

B. Placing Frames: Comply with provisions of SDI-105 "Recommended Erection Instructions For Steel Frames", unless otherwise indicated.
   1. Except for frames located at in-place concrete or masonry and at drywall installations, place frames prior to construction of enclosing walls and ceilings. Set frames accurately in position, plumbed, aligned, and braced securely until permanent anchors are set. After wall construction is completed, remove temporary braces and spreaders leaving surfaces smooth and undamaged.
   2. In masonry construction, locate 3 wall anchors per jamb at hinge and strike levels.
   3. At in-place concrete or masonry construction, set frames and secure to adjacent construction with machine screws and masonry anchorage devices.
   4. Install fire-rated frames in accordance with NFPA Std. No. 80.
   5. In metal stud partitions, install 4 wall anchors in hinge jamb, and 3 wall anchors in strike jamb; two at top hinge level of hinge jamb, and one each at hinge and strike levels. In steel stud partitions, attach wall anchors to studs with tapping screws.

C. Door Installation:
   1. Fit hollow metal doors accurately in frames, within clearances specified in SDI-100.
   2. Place fire-rated doors with clearances as specified in NFPA Standard No. 80.

3.02 ADJUST AND CLEAN

A. Prime Coat Touch-Up: Immediately after erection, sand smooth any rusted or damaged areas of prime coat and apply touch-up of compatible air-drying primer.

B. Clean surfaces promptly after installation of doors. Exercise care to avoid damage to the finish. Remove excess glazing and sealant compounds, dirt, and other substances.

C. Final Adjustments: Check and readjust operating finish hardware items, leaving steel doors and frames undamaged and in complete and proper operating condition.

3.03 –3.10 (NOT USED)

3.11 MEASUREMENT AND PAYMENT

A. Unless otherwise indicated, no separate measurement or payment for work performed under this Section. Include cost of same in Contract price bid for work of which this is a component part.

ATTACHMENT

Location	Davis WTP HSPS Surge Tank Vault
Size	3’ x 7’ x 2” (Width x Height x Thickness)
Type	Exterior Steel Door
Door Material	Hollow Metal
Frame Material	Hollow Metal
Fire Rating	None
Hardware Set	Reference Specification 08110
Window Glass Type	Tinted and Tempered Wire Glass
Window Glass Size	1’-8” x 2’-4” (Width x Height)
Window Glass Position	9’’ below Top of Door

END OF SECTION

THIS PAGE IS LEFT BLANK INTENTIONALLY

SECTION 08710

DOOR HARDWARE

PART 1 GENERAL

1.01 SUMMARY

A. Furnish and deliver to the project site all finish hardware as shown on the Drawings and as scheduled or as specified herein.

B. The schedule included herein designates the type and quality of the hardware desired. The brand of hardware furnished shall be equivalent to the brand scheduled.

C. Furnish and deliver to the door manufacturers all templates and schedules required by the manufacturers of the doors and frames to enable the manufacturers to make proper provision in their work to receive the finish hardware. All locks, lock strikes and flush bolts shall be made to ANSI standard dimensions.

D. Furnish padlocks as scheduled in the quantity specified.

1.02 RELATED REQUIREMENTS

A. Other related work as called for on PLANS or specified elsewhere in this or other TECHNICAL SPECIFICATION Sections.

1.03 REFERENCES

American National Standards Institute (ANSI)

Underwriters Laboratories (UL)

A. Where reference is made to one of the above standards, the revision in effect at the time of bid opening shall apply.

1.04 – 1.05 NOT USED

1.06 SUBMITTALS

A. Furnish the following in accordance with Specification Section 01300, “Submittals” and Section 01730, “Operation and Maintenance Data: complete shop drawings and product data for all items furnished under this Section. Shop drawings shall include a detailed hardware schedule identifying for each door item of hardware the item name, manufacturer's name, product number and the location to be installed in the work. Hardware templates shall not be distributed until the hardware schedule has been reviewed and approved in accordance with Section 01300. Submittals shall include the following:

1. Samples of hardware items proposed for use may be requested prior to approval to confirm standards of quality, including materials and finishes. If requested, two representative samples of each hardware item shall be submitted for review within ten days after the request is made.
2. No hardware items for which samples have been requested may be installed until the samples are approved.

1.07 QUALITY ASSURANCE

A. The hardware supplier shall have in his employ one or more members of the American Society of Architectural Hardware Consultants, who shall be responsible for the selection of hardware items; preparation and submittal of shop drawings, product data and samples and coordinating delivery of approved hardware items to the site of the work or to the door manufacturers as appropriate.

1.08 DELIVERY, STORAGE AND HANDLING

A. Packaging
   1. All hardware shall have the required screws, bolts and fastenings and instructions necessary for proper installation, wrapped in paper and packed in the same package as the hardware.
   2. Each package shall be legibly labeled, indicating that portion of the work for which it is intended.

1.09 NOT USED

1.10 WARRANTY

A. Furnish five year manufacturer warranty.

PART 2 PRODUCTS

2.01 MATERIALS

A. All hardware shall be entirely free from imperfections. Qualities, weights and sizes specified herein are the minimum that will be accepted. Provide hardware listed by UL for fire at labeled doors, except that hinges which are not UL approved shall have a melting point of greater than 2000 degrees F. Provide exit devices UL listed for panic situations.

B. Hardware Items

   1. Hinges
      a. Hager BB1191-NRP 4 1/2-inch by 4 1/2-inch, 32D.
      b. Hager ETW BB1191 4 1/2-inch by 4 1/2-inch, 32D.
   2. Locksets
      a. Sargents as approved by Owner's representative, stainless steel, with Cast l lever handle, six pin cylinders (operation as scheduled.).
   3. Closers
      a. (Door Closers) - Provide with cushion arm. LCN 4040 Series CUSH -TB stainless steel arms with aluminum polyurethane finish on all closer components by LCN or equal.
   4. Stops – Trimco 1214ES (as required by floor condition).
   5. Sweep –Trimco 102V or equal.
   6. Heads and Jambs Sound/Weather Seals - Hollow Metal Doors (Zero 770 provided with Aluminum Door Frames); Series 3000, by Pemko or 5050-BN or equal.
   7. Silencers - Glynn-Johnson GJ 64, similar by Baldwin or equal.
   8. Threshold - National Guard 425A
   9. Core: Sargent 7300 B interchangeable core
   10. Padlocks – Best Cylinder Padlock
   11. Exit Devices - Stainless steel, by Sargent with outside trim at doors as required, provide devices with center support brackets for crossbars. Brackets shall be

designed as an integral part of the device. For single doors, exit devices shall be 8900 series typical.

12. Key Cabinet for fifty doors minimum. Telkee Regent by P.O. Moore; Lund; HPC Inc. or equal.
13. Coordinators with carry bar strike, 900 Series by Ives Inc. or equal. Finish to be chrome plated ANSI 626.
14. Door contact - GE Sentrol 2500 door contact and 2200 series for overhead/vault.
15. Rain drip – 4" - 16A, National Guard
16. Door Sweep- 102V, National Guard

C. Closers and overhead stop and holders shall be sized as recommended by manufacturer and as approved for size and location of door served. The mounting of the closer and overhead stop and holder shall be coordinated for the operation of both items.

D. On exterior doors, provide hinges with pins not removable when door is closed. Provide 1/2 pair hinges for each 2-foot-6-inch or part thereof of door height. Provide thresholds as scheduled and full perimeter sound/weather seal system for threshold, head and jambs.

E. Provide full perimeter sound seals where required in acoustical areas as noted on the Drawings and in Door Schedule for exterior and interior doors and frames.

F. Provide type of threshold required by the Door Schedule for particular doors.

G. Provide three silencers in lock side jamb of single doors and four silencers in head of double doors. Silencers are not required at doors with sound/weather seals.

H. Closers shall be designed to clear weatherstripping. Brackets to hold closers are to be located inside the frame door stops where the weatherstripping is mounted. (Drop plate installation.)

I. Exit devices shall have stainless steel springs, and main arm pivots in addition to the stainless steel finish. Crossbars and arms shall be counter balanced. Crossbars shall have a minimum wall thickness of 0.62-inch or be reinforced.

2.02 FINISHES

A. Base metal for hardware shall be stainless steel for all items unless it is not available. Finish shall be ANSI 630. All hardware not available in stainless steel shall be bronze or brass with chrome finish ANSI 626.

B. For those items of hardware which are not able to be fabricated from stainless steel, the base metal shall be bronze or brass [steel]. Finish shall be ANSI 626, chrome plated.

C. Provide tactile warning on the door handles of hazardous locations. Door locations are as scheduled.

2.03 KEYING

A. All cylinder locks including padlocks shall be grand masterkeyed in one new set that is coordinated with the Owner's system. All cylinders shall be Construction Keyed for Contractor's use during construction period. Install permanent cylinders when directed. Keys and locks on any existing facilities shall remain as existing.

B. Provide one Grand Master and two Sub-masters (Administration and Plant Operations). The system division will be supplied by Engineer during construction.

C. Furnish

1. Two Grand Master keys
2. Three master keys
3. Two Change keys with each lock
4. Three Construction day keys

PART 3 EXECUTION

3.01 SCHEDULE OF HARDWARE SETS

A. The following general hardware sets represent hardware for one opening (single or pair of doors). Refer to Materials paragraphs above for additional items required under specified conditions. Quantities of each set supplied shall be sufficient to complete the work. Refer to Door Schedule for locations. The actual content of each set shall be determined by approved hardware sets.

1. HW 1 (Door -100)

1-PR Hinges	BB1191-NRP-4 1/2 x 4 1/2,32D	HA
1 - Lockset/exist devise	55-8976-F-ETL,26D	Sargent
1 - Closer	P4041 SCUSH -TB	LCN
1 EA Hinge	ETW-8-Bb1191, 32D	HA
1 – Threshold	425A	NGP
1 - Sweep	102V	NGP
1- Seal	5050BN	NGP
1- Rain Drip	16A+4"	NGP

3.02 –3.10 (NOT USED)

3.11 MEASUREMENT AND PAYMENT

Unless otherwise indicated, no separate measurement or payment for work performed under this Section. Include cost of same in Contract price bid for work of which this is a component part.

END OF SECTION

SECTION 09902

PAINTING AND PROTECTIVE COATINGS

PART 1 GENERAL

1.01 SUMMARY

A. Furnish and apply, as specified herein, paint and protective coatings to all surfaces, except steel water storage tanks, unless specifically excluded by this Section.

1.02 RELATED REQUIREMENTS

A. PLANS define special coating requirements.

B. Related work as called for on PLANS, or in this or other TECHNICAL SPECIFICATION Sections.

1.03 REFERENCES

The publications listed below form a part of this Specification to the extent referenced. The publications are referred to in the text by basic designation only.

STEEL STRUCTURES PAINTING COUNCIL (SSPC)

SSPC SP-1	Surface Preparation Specification No. 1 - Solvent Cleaning
SSPC SP-2	Surface Preparation Specification No. 2 - Hand Tool Cleaning
SSPC SP-3	Surface Preparation Specification No. 3 - Power Tool Cleaning
SSPC SP-5	Surface Preparation Specification No. 5 - White Metal Blast Cleaning
SSPC SP-6	Surface Preparation Specification No. 6 - Commercial Blast Cleaning
SSPC SP-7	Surface Preparation Specification No. 7 - Brush-Off Blast Cleaning
SSPC SP-8	Surface Preparation Specification No. 8 - Pickling
SSPC SP-10	Surface Preparation Specification No. 10 - Near-White Blast Cleaning

NATIONAL ASSOCIATION OF CORROSION ENGINEERS (NACE)

NACE No. 1	White Metal Blast Cleaning
NACE No. 2	Near-White Blast Cleaning
NACE No. 3	Commercial Blast Cleaning
NACE No. 4	Brush-Off Blast Cleaning

1.04 DEFINITIONS (NOT USED)

1.05 SYSTEM DESCRIPTION

A. Surfaces receiving coatings include:
1. Equipment, machinery, and metal surfaces.
2. Interior surfaces, as noted in room finish schedule.
3. Concrete surfaces, including concrete blocks (when noted on PLANS).
4. Threads on field-threaded galvanized pipe and conduit.
5. All cabinet and woodwork. (Stain finish unless otherwise noted.)
6. Interior concrete surfaces of new lift station wet wells.

7. Paint concealed structural steel and steel joists, after erection of deck and before steel is enclosed.
8. Procedures and coating systems specified herein are in addition to shop priming and surface treatment specified in other TECHNICAL SPECIFICATION Sections.

B. Unless otherwise noted or shown, the following areas or items do not require coating:
1. Non-ferrous and corrosion-resistant ferrous alloys such as copper, bronze, monel, aluminum, stainless steel, chromium plate, and atmospherically exposed weathering steel, except where:
   a. Required for electrical insulation between dissimilar metals;
   b. Aluminum and stainless steel are embedded in concrete or masonry, or aluminum is in contact with concrete or masonry;
   c. Color coding of equipment and piping is required.
2. Non-metallic materials such as glass, PVC, porcelain, and fiberglass, except as required for architectural painting or color coding.
3. Pre-finished electrical and architectural items such as motor control centers, switchboards, switchgear, panelboards, transformers, disconnect switches, panelboards, acoustical tile, cabinets, elevators, building louvers, etc., except when color coding of equipment is required.
4. Non-submerged electrical conduits attached to unpainted concrete surfaces.
5. Items specified to be galvanized after fabrication unless specified elsewhere or subject to immersion.
6. Insulated piping except as required for architectural painting or color coding.

1.06 SUBMITTALS

Submit the following in accordance with Specification Section 01300, “Submittals”.

A. Painting Schedule: Submit list indicating major items to be painted, preparation, paint manufacturer, product designation, and dry mil thickness.

B. Panels
1. Submit panels containing samples of proposed paints and coatings. Include three displays of each kind and color of paint used. Panel to be representative of material to be coated.
2. Mark panels to indicate respective types of surfaces to which several kinds and colors of paint, stain, and coating are applied.

C. Samples: If requested by OWNER, submit 1/4 pint of each kind of paint or stain proposed for use. Do not deliver materials to site until representative samples (if requested) have been approved.

D. For all materials, furnish ENGINEER with two sets of manufacturer’s printed instructions describing surface preparation procedures and application procedures including environmental limits (temperature and humidity).

E. List of five similar projects in accordance with Paragraph 1.07 B.1.

F. Material Safety Data Sheets (MSDS) for all coatings, solvents, sealers, and paints to be utilized.

1.07 QUALITY ASSURANCE

A. Manufacturer: All paints, sealers, and coatings to be manufactured by those firms listed in Table 2. Products of equal quality by other manufacturers will be considered, subject to review of written submittal that includes product data and a detailed paint and coating schedule.

B. Workmanship

1. Furnish workers who perform quality work and who are experienced and knowledgeable in the surface preparation and application of high-performance industrial coatings. Submit list of five similar projects which have been prepared and coated by the personnel which the CONTRACTOR proposes to employ for this project.
2. Submit manufacturer's written instructions on cleaning and coating prior to any surface preparation or coating.

C. Whenever possible, all coatings should be from single manufacturer. Unless otherwise specified, coating materials for a specific surface or piece of equipment are to be from a single manufacturer.

D. All coatings provided for use on this project in the field or from equipment suppliers will be in compliance with Federal, State, and local laws, regulations and ordinances related to items such as lead, chromate, carcinogens and volatile organic compounds. For potable water systems, all coatings and products used on surfaces 1) in contact with the water, 2) within 1 foot above the high water level and below the high water level, or 3) in contact with materials to be introduced into the water, to be National Sanitation Foundation (NSF) approved for potable water service.

1.08 DELIVERY, STORAGE AND HANDLING

A. Deliver to site in original, sealed containers with manufacturer's label attached.

B. Store in a protected area that is heated or cooled to maintain temperature range recommended by manufacturer. Protect all materials from weathering and extreme temperatures.

C. Waste and any hazardous material remaining at the end of the day to be discarded in accordance with national, state, and local regulations.

1.09 - 1.11 (NOT USED)

PART 2 PRODUCTS

2.01 MANUFACTURERS

A. Coating manufacturers are listed by generic type and service in Table 2 attached to this Section.

2.02 MATERIALS

A. Tables 1 and 2 in this Section include the paint, protective coatings, and sealers for this project. Furnish all such special materials required for the manufacturer's coating systems whether or not included in the Tables.

B. Products to comply with Federal, State, and local requirements limiting the emission of volatile organic compounds. The maximum volatile organic content of the combination of coating and thinner is not to exceed the following limits (whichever is less):
1. 3.5 pounds per gallon; or
2. The Federal, State or local limit.

C. Colors
1. OWNER reserves the right to select colors.
2. Submit list of items to be painted and color charts for each type of surface.
3. Formulate with colorants free of lead or lead compounds.
4. Proprietary color identification is for selection purposes only. Any authorized manufacturer may supply matches.

D. Safety Color Codes: Follow OSHA requirements of 29 CFR, Part 1910.144 for "Safety Color Codes for Marking Physical Hazards". The following general requirements are set forth as a guide.

1. Red: Fire protection equipment, danger signs, and fire exit signs. Portable containers of flammable material to be red with yellow band or name of contents stenciled in yellow.
2. Orange: Moving or rotating parts of equipment protected by guards, including shafts and couplings, pulleys, and sprockets. (Do not paint wearing surfaces.)
3. Yellow: Caution signs and all physical hazards, including outside levers and weights on check valves, lower pulley blocks and hooks, sprockets and chains on valve operators, inside of openings adjacent to step or ladders, platforms provided for vertical ladders at transition levels, exposed unguarded edges of pits, platforms and walls subject to being struck, and any piping or equipment extending into normal operating areas.
4. Green: To designate "Safety" and location of first-aid equipment such as gas masks, first-aid kits, and safety deluge showers.
5. Black and White: To indicate areas that must remain clear, such as areas around first-aid, fire-fighting, and other emergency equipment.

E. Piping Color Coding: The identification of process piping and chemical feed lines is to be accomplished by various colors of paint. Color coding to be by solid color and labels. Provide pipe color coding in accordance with applicable Specification Section.

1. Piping containing gas, chlorine or other hazardous materials are to be color coded when exposed, located out of view, or buried.
2. Non-potable water lines are to be painted white and marked with black lettering at maximum 5-foot intervals.

2.03 - 2.04 (NOT USED)

PART 3 EXECUTION

3.01 GENERAL

A. Use one convenient location for storing and mixing of materials and keep fire extinguisher available in this area as long as location is used for such purpose.

B. Thinners and Solvents: Use only those thinners and solvents specified in paint formulas of paint being used and mix in proportions recommended by paint manufacturer.

C. Coverage: As recommended by paint manufacturer and sufficient to obtain minimum mil thickness specified. Do not exceed maximum thickness specified by manufacturer, if applicable. After final coat is applied, check with elecometer or Mikrotest dry film thickness gauge.

D. Drying Time: Between successive coats, allow drying time as specified by paint manufacturer. Do not apply additional coats until previous coat is completed.

E. Provide adequate ventilation for proper curing. Keep materials sealed when not in use.

F. Environmental conditions such as temperature and humidity to be within the ranges recommended by the coating manufacturer.

G. Finish coats to be smooth, free of brush marks, streaks, laps or pile up of paints, and skipped or missed areas. Finished metal surfaces to be free of voids or pinholes in any coat when tested with a low voltage detector.

3.02 PREPARATION

A. General

1. Perform all preparation and cleaning procedures in strict accordance with paint manufacturer's instructions and as specified for each substrate.

B. Concrete Surfaces

1. Prior to painting, surfaces to be free of all latent matter, burrs, and fins, using one or more of the following methods.
   a. Remove oil and grease with detergent and thoroughly rinse with fresh water.
   b. Abrasive blasting may be used only if machinery or other equipment in vicinity of work is adequately protected. Also, avoid settling of dust or grit on freshly painted surfaces.
   c. Wash concrete surfaces with 10 percent solution of muriatic acid, then wash clean and free of scale, mortar, dust, moisture, and other foreign matter.
   d. Repair all honeycomb surface defects by coating cleaned honeycombed area with epoxy bonding agent and filling voids with non-shrink grout leaving a smooth uniform concrete surface.
2. If curing compound is used, it must be removed prior to coating.

C. Metal Surfaces

1. Clean metal surfaces by abrasive blasting in shop as required by Table l and leave clean, dry, and ready to receive prime coat. Provide moisture separators to effectively remove all oil and free moisture from air supply. Cleanliness of air to be tested by impinging an abrasive-free air stream onto a white cloth for one minute. If oil or moisture is detected, air source to be shut down and corrected.
2. Remove all dust and abrasives from surfaces by brushing or blowing with clean, dry air. Remove abrasive grit around and between joints of connecting members.
3. Perform field abrasive blasting only if required to correct unsatisfactorily cleaned and shop-primed metal and when approved by ENGINEER.
4. Removal of Oil and Grease: Remove oil and grease with a solvent approved by coating manufacturer, or by steam combined with detergent (in accordance with SSPC SP-1). Use of gasoline, kerosene, naphtha, or carbon tetrachloride not permitted.
5. Brushing, Scraping, Grinding, and Chipping: In field work, if abrasive blasting is not possible, scrapers, wire brushes, and other suitable grinding or chipping tools may be used (in accordance with SSPC SP-2 or SP-3) for removal of existing paint coatings prior to repainting, or for cleaning, before applying second coats.
6. Surface to be coated on same day as cleaned and before rust bloom occurs. Surfaces which have been cleaned but which have started to show signs of rust or dirt are to be cleaned again prior to coating at no additional expense to OWNER.
7. All surfaces to be at least 5°F or higher above the dew point and remain this way when blasting, priming, or coating.

D. Galvanized Surfaces

1. Clean surface with mineral spirits to remove oil residue.
2. Dry with a clean cloth.

E. Wood Surfaces

1. Clean soiled surfaces in accordance with coating manufacturer's instructions.
2. Sand to a smooth even surface and then dust off.

3. Apply shellac to all knots, pitch and resinous sapwood before priming coat is applied.
4. Fill nail holes, cracks, open joints and other defects with putty after priming coat has dried. Tint putty to match finish color. Sand smooth after putty dries.
5. Apply priming coats to woodwork as soon as practical after woodwork is delivered.
6. Top and bottom edges of all wood doors to be primed and sealed after fitting and before final hanging.

F. Gypsum Wallboard
1. Fill narrow, shallow cracks and small holes with spackling compound.
2. Rake deep, wide cracks and deep holes.
   a. Dampen with clean water.
   b. Fill with thin layers of drywall joint compound
3. Allow repairs to dry.
4. Sand smooth. Do not raise nap of paper on wallboard.

G. Plastic Surfaces:
1. Hand sand plastic surfaces to be coated with a medium grit sandpaper to provide tooth for coating system.
2. For surfaces with existing coatings, completely remove any existing coating and prepare surface as mentioned above.

3.03 ERECTION, INSTALLATION AND APPLICATION INSTRUCTIONS

A. General
1. Do not apply initial coating until moisture content of surface is within limitations recommended by paint manufacturer. Test with moisture meter.
2. Slightly vary the color of successive coats.
3. Sand and dust between each coat to remove defects visible from a distance of 5 feet.
4. Make edges of paint adjoining other materials or colors clean and sharp with no overlapping.
5. Change colors at corner of stop where colors differ between adjoining spaces or rooms and where door frames match wall colors.
6. Do not proceed with field applied painting of shop-coated items until any defective work has been cleaned by sandblasting.

B. Brush Application
1. Brushes: Use first-quality hog hair or suitable synthetic bristle brushes. Use of horsehair bristle brushes not permitted. Keep brushes clean and free from accumulation of dried paint or dirt, and when brushes for oil or varnish base paints are not in use, keep them suspended in raw linseed oil bath. Clean brushes with proper solvent before reuse.
2. Application: Apply in uniform thickness consistent with specified coverage and with sufficient cross-brushing to ensure filling of surface irregularities. Exercise particular care in painting around bolt heads and nuts and in corners and other restricted spaces.

C. Conventional Spray Application: Apply with adjustable air gun equipped with suitable water trap to remove moisture from compressed air, and with paint pot having air driven or mechanical agitator. Adjust width of spray to meet the requirements of the surface being coated with suitable air pressure for the particular type of paint being used. Make frequent checks to ensure correct spreading rate and coating and apply without sags, runs, or “orange peel” effect. Correct all such imperfections. Take special care to cover edges, corners, and bolt heads, without bridging over of paint film.

D. Airless Spray Application: Equipment used for airless spray to be designed for, and capable of handling, the volume and pressures necessary to ensure smooth and proper application. Hoses to be specifically designed for the viscosity of the material being sprayed and be of the non-static, self-grounding type. Tips to be properly sized to ensure complete atomization and the spray pattern is to be continuous and free of all fingering effects.

E. Roller Application: Proper length nap rollers to be used to ensure a smooth application free of runs, sags, roller marks, or air bubbles. Use longer nap for rougher surfaces when specified on PLANS. Phenolic core lambs wool type rollers to be used when polyurethanes, epoxies, or other types activated coatings are applied by roller. Standard type rollers to be used on water based and enamel coatings. Rollers to be of sufficient quality to leave finished surfaces free of lint, roller nap, runs, sags, and other imperfections. Roller is not to exceed 24 inches in length.

F. Metal Surfaces
1. Shop-prime metal surfaces, if required, prior to delivery to job site.
2. After delivery and prior to installation, keep all coated metal surfaces clean and free from corrosion. Clean and touch up or repaint damaged areas with additional primer.
3. After erection or installation of metal work, clean and touch up all rust spots, all places where primer has been rubbed or scraped off, and all bolts and nuts. After previously applied paint has hardened, and when surfaces to receive succeeding coats of paint have been cleaned and dried, apply finish paint in accordance with Tables 1 and 2. Allow 7 days or more, as recommended by coating manufacturer, for curing of final coat for submerged surfaces.
4. Factory-Finished Equipment: After installation of factory-finished machinery and electrical equipment, check base coats carefully and touch up all damaged surface areas. Do not paint nameplates, serial number bases, chrome, or bronze trim. Clean off any excess paint that impairs convenient removal of covers on gauges, instrumentation, or other equipment fitted with doors or covers.
5. Factory-Primed Equipment: Delay final field coating to manufacturer's primed equipment until equipment has been installed and is in proper working order in accordance with the applicable Section.

G. Mixing and Tinting
1. Deliver paints and enamels ready mixed to job site.
2. Accomplish job mixing and job tinting only when acceptable to the ENGINEER.
3. Mix only in mixing pails placed in suitably sized non-ferrous or oxide resistant metal pails.
4. Use tinting colors recommended by manufacturer for the specific type of finish.
5. Multiple-Component Coatings:
   a. Prepare using all the contents of the container for each component as packaged by the manufacturer.
   b. No partial batches permitted.
   c. Do not use multiple component coatings that have been mixed beyond their pot life.
   d. Provide small quantity kits for touch up painting and for painting small areas.
   e. Mix only components specified and furnished by coating manufacturer.
   f. Do not intermix additional components for reasons of color or otherwise, even within the same generic type of coating.

H. Special Requirements: Cast iron or ductile iron piping and valves for interior and exterior aboveground installation with a factory-applied bitumastic or asphaltum varnish coating to be cleaned by abrasive blasting to a NACE No. 3 finish for interior installations and a NACE No. 2 finish for exterior surfaces. Primer and finish coat to be applied in

accordance with Table 1. If primer is not applied within 24 hours, surfaces to be retreated.

3.04 REPAIR/RESTORATION

A. Leave all parts of moldings and ornaments clean and true to details with no undue amount of paint in corners and depressions.

B. Remove all masking products used to protect hardware or built-in work.

C. Final Cleaning and Touch Up
   1. Touch up and restore finish where damaged.
   2. Do not mar surface finish of item being cleaned.

D. Refinish whole wall where portion of finish has been damaged or is not acceptable.

E. Damaged Coatings, Pinholes and Holidays
   1. Feather edges and repair in accordance with recommendations of coating manufacturer.
   2. Repair fusion bonded coatings as recommended by original applicator. Applicator to furnish liquid repair kits for this purpose as recommended by the coating manufacturer.
   3. Apply finish coats, including touch up and damage-repair coats, in a manner which presents a uniform texture and color-matched appearance.

F. Unsatisfactory Application
   1. If coating has improper finish color or insufficient film thickness: Clean and top coat surface with specified material to obtain specified color and coverage. Obtain and follow specific surface preparation information for top coating from coating manufacturer.
   2. Hand or power sand visible areas of chipped, peeled, or abraded paint, and feather edges. Follow with primer and finish coat in accordance with this Section. Depending on extent of repair and appearance, a finish sanding and top coat may be required.
   3. Evidence of runs, sags, bridges, shiners, laps, or other imperfections to be cause for rejection.
   4. Repair defects in coating system per written recommendations of coating manufacturer.
   5. Leave all staging in place until ENGINEER has inspected surface or coating. Replace staging removed prior to inspection and approval by ENGINEER.

3.05 FIELD QUALITY CONTROL

A. Schedule field operations to avoid settling of dust or grit on freshly painted surfaces, and adequately protect machinery or other equipment in vicinity of abrasive blasting work.

B. Request review by OWNER of first finished room, space, or item, of each color scheme for color, texture, and workmanship.

C. Use first acceptable room, space or item (as determined by OWNER), as project standard for each color scheme.

D. For spray application, paint an area no smaller than 100 square feet as the project standard.

3.06 ADJUSTING (NOT USED)

3.07 CLEANING

A. During the progress of the work, remove from the project site at the close of each day's work, all oily rags, discarded materials, rubbish, cans, and dispose of in accordance with national, state, and local regulations.

B. On completion of operations, remove all spots, oil, and stain from all surfaces and leave entire project in clean condition as far as this work is concerned.

C. Remove from premises all containers and debris resulting from this work and dispose of in accordance with Federal, State and local regulations.

D. Upon completion of the work remove staging and scaffolding from the site.

3.08 TESTING AND INSPECTION

A. CONTRACTOR is to perform routine quality control testing on each coat to ensure the integrity of the protective coating. At a minimum, the following tests are to be performed.
   1. Dry film thickness.
   2. Holiday testing.
   3. Any additional tests as recommended by coating manufacturer.

B. Any and all testing performed by the ENGINEER is for the sole purpose of verifying compliance with this specification. CONTRACTOR is not to rely upon testing performed by the ENGINEER as a means of quality control.

C. CONTRACTOR to provide the following equipment for use by the ENGINEER.
   1. One magnetic pull-off type, non-destructive paint film thickness gauge, such as a Mikrotest thickness gauge. Thickness gauge to become OWNER's.
   2. One set of certified coating thickness calibration standards produced by the U.S. Department of Commerce. Calibration standards to become OWNER's.
   3. One "wet sponge", low voltage, D.C. type holiday detector, such as the Tinker-Rasor Electrical Holiday Detector.

D. Provide the ENGINEER with the proper safety equipment for observation and testing of the applied coating.

E. To facilitate ENGINEER's inspection of coated surfaces, CONTRACTOR to provide scaffolding/rigging and adequate illumination as required to perform the dry film thickness reading and holiday test inspections as required by this specification and the referenced standards. Provide personnel to move the scaffolding, lighting, or rigging at the request of the ENGINEER.

F. No equipment is to be placed in service until the protective coating has been tested and approved by the ENGINEER.

3.09 PROTECTION

A. CONTRACTOR is solely and completely responsible for conditions of the job site including safety of all persons (including employees) and property during performance of the work. This requirement applies continuously and is not limited to normal working hours. Conform with safety provisions of the U.S. Department of Labor, Occupational Safety and Health Act, any equivalent State law, and all other applicable Federal, State, and local laws, ordinances, and codes.

B. Protect floors and all other areas where work is done, with suitable drop cloths.

C. Remove, mask, or otherwise protect all hardware, hardware accessories, lighting fixtures, switchplates, machined surfaces, couplings, shafts, bearings, labels, nameplates, etc. and other surfaces not intended to be painted prior to surface preparation and painting. Reinstall the removed items by workmen skilled in the trades involved.

D. CONTRACTOR is cautioned of the potential risk of damage and/or nuisance to the adjoining property and/or structures. CONTRACTOR is responsible for providing necessary equipment and/or controls to minimize the carryover of dust, paint, and abrasives. If excessive dust, paint, or abrasives are determined by the OWNER, or their representative, to be affecting adjoining property and/or structures, CONTRACTOR to utilize shrouds, drop tubes, or other means to confine a minimum of 95 percent of the abrasive, paint, and other material to the associated work area.

E. Protect working parts of mechanical and electrical equipment from damage. Mask openings in motors to prevent paint and other materials from entering motor.

3.10 SCHEDULES

A. Attachments to this Section define System Schedule (Table 1) and Coating Schedule (Table 2).

3.11 MEASUREMENT AND PAYMENT

No separate measurement or payment for work performed under this Section. Include cost of same in Contract price bid for work of which this is a component part.

TABLE 1 – SYSTEM SCHEDULE

Type of Surface	Exposure	Surface Preparation/ Cleaning	Table 2 – Material Reference: Primer	1st Coat	2nd Coat	3rd Coat	Minimum Total Mils Thickness
Clay or Brick Masonry	Exterior(1)	Manufacturer's Specification	—	1	—	—	NA
Concrete Block Buildings	Exterior	Manufacturer's Specification	—	2	4	4	3.0 (Finish Coat)
Concrete Block Walls	Interior(2) - Painted	Paragraph 3.02 B	—	3	4	4	3.0 (Finish Coat)
	Interior(2) - Sealed	Paragraph 3.02 B	—	3A	—	—	NA
Concrete Walls and Ceilings	Interior	Paragraph 3.02 B	—	3	4	4	3.0 (Finish Coat)
Wood	Exterior and Interior	Manufacturer's Specification	10	11	11	—	4.5
Wood, Clear Finish, Satin	Interior	Manufacturer's Specification	23, 24	25	26	26	4.0
Wood, Clear Finish, Gloss	Interior	Manufacturer's Specification	23, 24	25	27	27	4.0
Wallboard (Semi-Gloss)	Interior	Manufacturer's Specification	19	20	22	22	4.0 + texture
Wallboard (Flat)	Interior	Manufacturer's Specification	19	20	21	21	4.0 + texture
Metal Doors, Frames and Windows	Exterior and Interior	NACE-#4 1.0 Mils Surface Profile	18	9	—	—	4.0
Structural and Misc. Steel	Exterior	NACE-#2 1.0-2.0 Mils Surface Profile	16	18	9	—	7.0
Structural and Misc. Steel	Interior	NACE-#3 1.0-2.0 Mils Surface Profile	16	17	—	—	5.5
Structural and Misc. Steel	Submerged(9)	SSPC-SP10/ NACE-#2 2.0-4.0 Mils Surface Profile	—	36	—	—	50
Piping and Valves	Interior(2)	NACE-#3	6	17	—	—	4.5
	Exterior(1)	NACE-#2 1.0-2.0 Mils Surface Profile	6	18	9	—	6.0
Valves and Bolting on C.I.	Buried	—	—	14	14	—	32.0

TABLE 1 – SYSTEM SCHEDULE

Type of Surface	Exposure	Surface Preparation/ Cleaning	Table 2 – Material Reference				Minimum Total Mils Thickness
			Primer	1st Coat	2nd Coat	3rd Coat	
Pipe							
Factory Finished Machinery, Electrical, and Motors(3)	Interior and Exterior	Hand Clean	5(4)	8(5)	8(5)	—	4.5
Galvanized Steel	Interior	Solvent Cleaning	15	17	—	—	2.9
Galvanized Steel and Galvanized Pipe Conduit Threads	Exterior	Solvent Cleaning	15	18	9	—	4.4
Wastewater Treatment Plant Equipment, Piping	Submerged(6)	NACE-#2 2.0-3.0 Mils Surface Profile	28	29	—	—	45.0
Wastewater Wet-Well	Interior Surfaces	Paragraph 3.02 B	6	13	13	—	22.0
Special Surfaces Noted on PLANS	Surfaces as Shown on PLANS	Hydroblast and SSPC SP-7(8)	28	29	—	—	125.0

NOTES:

(1) Surface or piping above ground exposed to weathering.
(2) Surface or piping above ground sheltered from weathering.
(3) Use coating system per equipment Section when specified.
(4) Optional: Use manufacturer's standard primer if compatible with specified finish coats.
(5) Optional: Use manufacturer's standard finish coat.
(6) Piping or equipment that is submerged or partially submerged in a fluid.
(7) Coatings used must be in the latest publication of National Sanitation Foundation (NSF) ANSI/NSF Standard 61.
(8) Shop priming on iron/steel materials is not required. Surface preparation and primer are done in field. Concrete surface preparation involves ¼″ wide × ¼″ deep saw cut to anchor coating to surface.
(9) Submerged in natural water body such as a lake.

TABLE 2 – COATING SCHEDULE

Symbol	Min. Dry Mils Per Coat*	Service	Generic Type	Brand and Manufacturer
1.	NA	Primary Sealer	Chemical Penetrant	Aqua-Gard - CreteGard Corp. Seal Krete - ICI Devoe #89424
2.	NA	Weather-proof Primary Sealer	Acrylic Emulsion	ACRO 2290 DTM Acrylic Latex - ACRO Amercoat 148 - Ameron Tru-Glaze 4010 - ICI Devoe
3.	NA	Primary Sealer	Vinyl-Acrylic Emulsion with Epoxy Esters	ACRO 1153 Latex Block Filler - ACRO Amercoat 148 - Ameron Blaxfil 4000 - ICI Devoe
3A.	NA	CMU, Clear Block Sealer	Siloxane Sealer, 10% Siloxane-Acrylic Emulsion	OKON W-2 Saver Systems WB Aqua-Trete EM - Sivento
4.	1.5	Finish Coat	Acrylic Emulsion	ACRO 2288 Exterior Latex - ACRO Amercoat 220 - Ameron LifeMaster-Pro 4226 - ICI Devoe
5.	1.5	Metal Primer	Alkyd	ACRO 1104 Heavy Duty Primer - ACRO Amercoat 5105 - Ameron Carbocoat 150 - Carboline Devguard 4160 - ICI Devoe
6.	2.0	Metal Primer or Concrete Surfaces	Polyamide Cured Epoxy Resin	ACRO 4422 Epoxy Primer - ACRO Amercoat 385PA - Ameron Carboguard 888 - Carboline 13-R-62-Epoxy Primer - Valspar BarRust 231 - ICI Devoe
7.**	2.0-4.0 (as recommended)	Metal Primer	Polyamide Cured Epoxy Resin	ACRO 4460 Chemical Resistant Epoxy - ACRO Amercoat 385PA - Ameron Carboguard 561 - Carboline Valspar 90HS - Valspar BarRust 233H - ICI Devoe
8.	1.5	Finish Coats	Alkyd, Straight Long-Oil	ACRO 2214 Heavy Duty Enamel - ACRO Amercoat 5450 - Ameron Carbocoat 139 - Carboline Devguard 4308 - ICI Devoe
9.	2.0	Finish Coat	Aliphatic Urethane	ACRO 4429 Polyurethane - ACRO Amercoat 450HS - Ameron Carbothane 134HG - Carboline V40 Polyurethane Enamel - Valspar Devthane 389 - ICI Devoe
10.	1.5	Wood Primer	Oil Base	ACRO 2214 Enamel (Thinned 10%) - ACRO Amercoat 5105 - Ameron Carbocoat 139 - Carboline Ultrahide 2110 - ICI Devoe
11.	1.5	Finish Coat	Alkyd, Straight Long-Oil	ACRO 2214 Heavy Duty Enamel -

TABLE 2 – COATING SCHEDULE

Symbol	Min. Dry Mils Per Coat*	Service	Generic Type	Brand and Manufacturer
				ACRO Amercoat 5405 - Ameron Carbocoat 139 - Carboline Devguard 4308 - ICI Devoe
12.**	4.0-6.0 (as recommended)	Submerged Steel, Iron, or Concrete Surface	Polyamide-Cured Epoxy Resin	ACRO 4460 Chemical Resistant Epoxy - ACRO Amercoat 370 - Ameron Carboguard 561 - Carboline BarRust 231 - ICI Devoe
13.	10	Submerged Steel, Iron, or Concrete Surface	Coal-Tar Epoxy Two Component	ACRO 4467 Coal Tar Epoxy - ACRO Amercoat 78HB - Ameron Bitumastic 300M - Carboline
14.	16	Buried Steel or Iron	Tar-Base Pitch	ACRO 8500 Heavy Duty Coal Tar - ACRO Bitumastic No. 50 - Kop-Coat Devtar 247 - ICI Devoe
15.	0.4	Galvanized Metal Primer	Vinyl Wash Primer	ACRO 1162 Vinyl Wash Primer - ACRO Galva-Prep - Ameron Rustbond Penetrating Sealer - Carboline Devran 205 - ICI Devoe
16.	3.0	Steel Above Ground & Above Waterline	High Ratio Silicate Inorganic Zinc	ACRO 5502 Inorganic Zinc - ACRO Dimetcote 9 - Ameron V13-F-12 Inorganic Zinc - Valspar Catha-Coat 302H - ICI Devoe
17.	2.5	Steel Interior	Polyamide Cured Epoxy Resin	ACRO 4460 Chemical Resistant Epoxy - ACRO Amercoat 385 - Ameron Carboguard 561 - Carboline Bar-Rust 231, Devran 224HS - ICI Devoe
18.	2.0	Intermediate Finish		ACRO 4460 Chemical Resistant Epoxy - ACRO Amercoat 385 - Ameron Carboguard 561 - Carboline Devran 220 - ICI Devoe
19.	NA	Texture	Emulsion	Ready-Mixed Texture Compound - U.S.Gypsum Speedhide Texture Emulsion - PPG
20.	1.2	Sealer	Vinyl-Latex	Quick-Drying Latex Sealer, 6-2 - PPG Interior Vinyl Latex Primer-Sealer, 50801 - Devoe
21.	1.4	Finish Coat-Flat	Synthetic Alkyd Resin	Alkyd Flat Wall Enamel - Negley Speedhide Alkyd Flat, 6 Line - PPG 50801 - Devoe
22.	1.4	Finish Coat Semi-Gloss	Synthetic Alkyd Resin	Coronado Supercoat 5000 Speedhide Alkyd Lo-Sheen Enamel, 6

TABLE 2 – COATING SCHEDULE

Symbol	Min. Dry Mils Per Coat*	Service	Generic Type	Brand and Manufacturer
				Line - PPG Velour Interior Alkyd Semi-Gloss Enamel - 26XX Devoe
23.	NA	Wood Filler	Alkyd Resin w/Linseed Oil	Paste Wood Filler - Negley Natural Paste Wood Filler - PPG Interior Solvent Base Paste Wood Filler 4800 - Devoe
24.	NA	Stain	Synthetic Alkyd Resin	Coronado Quick Seal Rez Interior Wiping Stain, Alkyd Oil Type, Quick Drying, 77-302 - PPG Penchrome DF203 - ICI Devoe
25.	1.0	Sealer/Primer	Synthetic Alkyd Resin	Rez Sealer-Primer, 77-1 - PPG
26.	1.5	Clear Finish, Satin	Polyurethane Varnish	Coronado Polyurethane 67 Series Rez Polyurethane Satin Clear Plastic Varnish, 77-89 - PPG DF500 - ICI Devoe
27.	1.5	Clear Finish, Gloss	Polyurethane Varnish	Coronado Polyurethane 67-10 Rez Exterior/Interior Polyurethane Gloss Clear Plastic Varnish, 77-55 - PPG
28.	5	Steel, Iron or Concrete Surface	Modified Amine-Addnet Epoxy	Polybrid 670S - Polybrid Coatings, Inc. (no “or equal”)
29.	40-120	Steel, Iron or Concrete Surface	Elastomeric Polyurethane Aromatic	Polybrid 705 - Polybrid Coatings, Inc. (no “or equal”)
30.	NA	Concrete Primer		RE2KLAND E-135S Primer, Resign and Hardener, Atlas Minerals and Chemicals
31.	62.5	Intermediate & Finish Coat		RE2KLAND E-135SC, Atlas Minerals and Chemicals
32.	20	Concrete Primer		ChemPruf VE Primer. Atlas Minerals and Chemicals
33.	20	Intermediate & Finish Coat		ChemPruf 141, Atlas Minerals and Chemicals
34.	5.0	Primer	Polyamide Epoxy	Hi-Build Epoxoline, Series 66. TNEMEC
35.	5.0	Intermediate & Finish Coast	Aliphatic Acrylic Polyurethane	Endura-Sheild, Series 73 TNEMEC
36.	NA	Finish Coat	100% Solids Polyurethane	ITW Futura, Protec II PW Madison, Corropipe II PW

*Or manufacturer’s standard, whichever is greater. Do not exceed manufacturer’s maximum standard, if applicable.

**For potable water use.

END OF SECTION

THIS PAGE IS LEFT BLANK INTENTIONALLY

SECTION 10431

SIGNAGE

PART 1 GENERAL

1.01 SUMMARY

A. Furnish all labor, materials, equipment and incidentals required and install signage as specified and scheduled herein.

B. The types to be furnished are as follows:
   1. Room identification signs.
   2. Site signs, identification, restrictive and directional.
   3. Restrictive signs.

1.02 RELATED REQUIREMENTS

A. Other related work as called for on PLANS or specified elsewhere in this or other TECHNICAL SPECIFICATION Sections.

1.03 – 1.05 NOT USED

1.06 SUBMITTALS

A. Furnish the following in accordance with Specification Section 01300, “Submittals” and Section 01730, “Operation and Maintenance Data”: Submittals shall include the following:
   1. Manufacturer's complete color range and type styles.
   2. Sign layout with shop drawings as follows:
      a. Scale layout of all site signs.
      b. Full size layout of typical Room Identification, Restrictive and Process Identification signs.
      c. Full size layout and text of Dedication Plaque.
   3. Submit two each of the following samples. Samples shall be resubmitted as required until approved.
      a. A 12-in minimum square sample of proposed encapsulated Site Sign with subsurface graphics and 12-in mounting post and spacer attached.
      b. A 12-in minimum square sample of each proposed plastic restrictive sign and proposed framing and mounting device.
      c. A 6-in minimum square sample of proposed plastic sign showing proposed framing and mounting device and/or pressure sensitive vinyl for Room Identification cut into letters in the colors proposed for the required color scheme.
   4. Cleaning and maintenance instructions for all signage components.

1.07 – 1.09 NOT USED

1.10 WARRANTY

A. Furnish five year manufacturer warranty.

PART 2 PRODUCTS

2.01 MATERIALS

A. Signs shall be manufactured by Architectural Signage Products, 5214 Burleson Rd., Suite 405-6, Austin, Texas; Austin Architectural Graphics, 516 Navasota, Austin, Texas; Innovative Graphics Systems, P.O. Box 33139, Austin, Texas 78764; Trinity Sign Graphics, 7802 Doncast, Austin, Texas 78745; The Southwell Company, P.O. Box 299, San Antonio, Texas 78291. All lettering shall be Optima Semi Bold upper and lower case and sized as specified or as shown on scale sign drawings. All exposed surfaces shall be matte finish as approved.

B. Interior Room Identification signs; 1/8" – thick Westinghouse Micarta raised graphics with domed braille, square corner and no borders applied as indicated on the Drawings and comply with ADA and ANSI A117.1 requirements. The adhesive and finish surface shall be protected with one piece removable liners. Colors shall be in contrasting colors as selected by Owner's representative from manufacturer's standard full color range.

C. Word and Picture Signs; 1/8" – thick Westinghouse Micarta raised graphics with domed braille, square corner and no borders applied as indicated on the Drawings and comply with ADA, ANSI A117.1 and OSHA. The adhesive and finish surface shall be protected with one piece removable liners. Colors shall be in contrasting colors as selected by Owners representative from manufacturer's standard full color range.

1. Word and Picture (WP) types shall include but not limited to the following (refer to signage schedule): WP236RB (Stairs), WP260RB (In Case of Fire Do not Use Elevator Use Stairs), WP237 (Exit), WP251 (Fire Extinguisher), WP284 (No Smoking in Elevator), WP278 (Emergency Shower), WP279 (Emergency Eye Wash), WP293 (Danger-High Voltage).

D. Site Signs

1. For bidding purposes text and composition of site signs shall be as shown on Drawings. Final text and composition shall be as shown on approved shop drawings. Signs shall be located as shown.
2. Signs shall be provided with galvanized U-channel posts. Handicapped parking signage shall be white lettering and symbol on blue background (#SS 53) and Alternative Fuel / Carpool Van parking signage shall be black lettering on white background (#SS 49 sim.).
3. Site signs shall be designed to withstand wind loading of 30 psf without damage or permanent deflection.

PART 3 EXECUTION

3.01 INSTALLATION

A. Signage shall be installed at the locations detailed or as directed, in accordance with the manufacturer's recommendations, ADA, ANSI A117.1, OSHA and approved shop drawings.

B. Posts for site signs shall be shop mounted on base plates and installed on 12-in by 12-in by 4-ft deep footings constructed of 2500 psi concrete as specified in Section 403S and secured with nuts on anchor bolts furnished under this Section and cast into the concrete. Peen-over bolt threads to prevent removal as directed. Set concrete to provide bottom of base plate at 6-in below grade.Dedication plaque shall be installed into holes drilled in masonry with waterproof cement in accordance with the approved shop drawings. Plaque shall be flush with wall. Locate on interior as directed.

C. Damaged units or components shall be removed and replaced at no additional cost to the Owner.

D. Signage shall be cleaned to the satisfaction of the Engineer using the approved methods, upon completion of the installation and again, just prior to acceptance of the project.

3.02 –3.10 (NOT USED)

3.11 MEASUREMENT AND PAYMENT

Unless otherwise indicated, no separate measurement or payment for work performed under this Section. Include cost of same in Contract price bid for work of which this is a component part.

END OF SECTION

THIS PAGE IS LEFT BLANK INTENTIONALLY

SECTION 11210

REHABILITATION AND STARTUP OF HORIZONTAL SPLIT CASE PUMPS

PART 1 GENERAL

1.01 SUMMARY

A. Remove, inspect, rehabilitate, install and start up complete working pump units for high service pumps as shown on PLANs and as specified herein. Each pump unit consists of pump and motor assemblies and associated auxiliary equipment. This specification section defines the contract requirements for work associated with the pumps. The work associated with motor rehabilitation is defined in Section 16825.

B. This Section defines the scope of the work for the rehabilitation and startup of existing horizontal split case pumps for high service pumping at Davis WTP as specified herein and as shown on PLANS. The scope consists of two categories: base bid items and Allowance items. Unless otherwise noted in this Section, all items listed herein are base bid items.

C. The CONTRACTOR is responsible for providing complete working pump units that comply with the performance requirements as shown in the testing sections of this specification. It is CONTRACTOR's responsibility to determine and develop additional scope and procedures that are required to achieve complete working status for each pump unit as specified herein. All additional scope and procedures beyond those specified herein shall be submitted for OWNER's review and approval, prior to being initiated.

D. The CONTRACTOR shall coordinate all work performed on pumps, motors, valves and piping inside the High Service Pump Station to minimize delays and conflicts.

1.02 RELATED REQUIREMENTS

A. PLANS show general arrangement, location, and basic dimensions. Attachment "A" to this Specification Section gives basic performance and design information for the pump units to be rehabilitated.

B. Attachments "B" and "C" show the certified test data for each pump unit in its original condition.

C. Related work as called for on PLANS or specified in this or other TECHNICAL SPECIFICATION Sections.

1.03 REFERENCES

The latest version of the publications listed below form a part of this Specification to the extent referenced. The publications are referred to in the text by basic designation only.

AMERICAN SOCIETY OF TESTING AND MATERIALS (ASTM)

ASTM A36	Standard Specification for Carbon Structural Steel
ASTM A48	Standard Specification for Gray Iron Castings
ASTM A49	Standard Specification for Heat-Treated Carbon Steel Joint Bars, Microalloyed Joint Bars, and Forged Carbon Steel Compromise Joint Bars
ASTM A53	Standard Specification for Pipe, Steel, Black and Hot-Dipped, Zinc-Coated Welded and Seamless
ASTM A108	Standard Specification for Steel Bars, Carbon, Cold Finished, Standard Quality

ASTM A181	Standard Specification for Carbon Steel, Forgings for General Purpose Piping
ASTM A276	Standard Specification for Stainless Steel Bars and Shapes
ASTM A283	Standard Specification for Low and Intermediate Tensile Strength Carbon
ASTM A322	Standard Specification for Steel Bars, Alloy, Standard Grades
ASTM A494	Specification for Castings, Nickel, and Nickel Alloy
ASTM A536	Standard Specification for Ductile Iron Castings
ASTM A564	Standard Specification for Hot-Rolled and Cold-Finished Age-Hardening Stainless Steel Bars and Shapes
ASTM A582	Standard Specification for Free-Machining Stainless Steel Bars
ASTM A743	Standard Specification for Castings, Iron-Chromium, Iron-Chromium-Nickel, Corrosion Resistant, for General Application.
ASTM B148	Standard Specification for Aluminum-Bronze Sand Castings
ASTM B367	Specification for Titanium and Titanium Alloy Castings
ASTM B505	Standard Specification for Copper Alloy Continuous Castings
ASTM B584	Standard Specification for Copper Alloy Sand Castings for General Applications
ASTM E10	Test Method for Brinell Hardness of Metallic Materials

AMERICAN SOCIETY OF MECHANICAL ENGINEERS (ASME)

ASME B16.5-2009	Pipe Flanges and Flanged Fittings

AMERICAN NATIONAL STANDARD INSTITUTE/HYDRAULIC INSTITUTE (ANSI/HI)

ANSI/HI 1.1–1.2	Centrifugal Pumps for Nomenclature and Definitions
ANSI/HI 1.3	Rotodynamic (Centrifugal) Pumps for Design and Application
ANSI/HI 1.4	Rotodynamic (Centrifugal) Pumps for Manuals Describing Installation, Operation and Maintenance
ANSI/HI 1.6	Centrifugal Pump Tests
ANSI/HI 9.1-9.5	Pumps – General Guidelines for Types, Definitions, Application, and Sound Measurement and Decontamination
ANSI/HI 9.6.4	Rotodynamic (Centrifugal and Vertical) Pumps for Vibration Measurements and Allowable Values
ANSI/HI 9.6.6	Rotodynamic Pumps for Pump Piping
ANSI/HI 9.8	Pump Intake Design

INTERNATIONAL ORGANIZATION OF STANDARDIZATION (ISO)

ISO Quality Grade G2.5

AMERICAN NATIONAL STANDARDS INSTITUTE (ANSI)

S1.4	Specification for Sound Level Meters

STEEL STRUCTURES PAINTING COUNCIL (SSPC)

SSPC SP-1	Surface Preparation Specification No. 1 - Solvent Cleaning
SSPC SP-2	Surface Preparation Specification No. 2 - Hand Tool Cleaning
SSPC SP-3	Surface Preparation Specification No. 3 - Power Tool Cleaning
SSPC SP-5	Surface Preparation Specification No. 5 - White Metal Blast Cleaning
SSPC SP-6	Surface Preparation Specification No. 6 - Commercial Blast Cleaning
SSPC SP-7	Surface Preparation Specification No. 7 - Brush-Off Blast Cleaning
SSPC SP-8	Surface Preparation Specification No. 8 – Pickling
SSPC SP-10	Surface Preparation Specification No. 10 - Near-White Blast Cleaning

NATIONAL ASSOCIATION OF CORROSION ENGINEERS (NACE)

NACE No. 1	White Metal Blast Cleaning
NACE No. 2	Near-White Blast Cleaning
NACE No. 3	Commercial Blast Cleaning
NACE No. 4	Brush-Off Blast Cleaning

AMERICAN NATIONAL STANDARD INSTITUTE/AMERICAN PETROLEUM INSTITUTE (ANSI/API)

ANSI/API 610-2004	Centrifugal Pumps for Petroleum, Petrochemical and Natural Gas Industries

AMERICAN WATER WORKS ASSOCIATION (AWWA)

AWWA E103-07	Horizontal and Vertical Line-Shaft Pumps

NATIONAL SCIENCE FOUNDATION (NSF)

NSF-61	Drinking Water System Component Health Effects

1.04 DEFINITION

A. The terms of “Pump Manufacturer” and “Pump Repairer” are used interchangeably in this specification section.

1.05 PUMP REHABILITATION AND PERFORMANCE CRITERIA

A. The pumps shall meet the following requirements after rehabilitation:
   1. Performance requirements for the rehabilitated pumps shall be as specified in Paragraph 3.03/H.
   2. Allowable Operating Range: The CONTRACTOR shall require that pump repairer confirm the allowable operating range of the original pump curves. When the allowable operating range is limited by factors other than percentages of flow defined by HI (e.g., vibration, etc.), that factor shall be submitted to the ENGINEER as part of the Shop Drawings.

B. Warranty:

1. The CONTRACTOR shall provide a 24-month warranty on all work and pump operation after start up and acceptable by the OWNER, not to exceed 30 months after delivery.

1.06 SUBMITTALS

Submit the following in accordance with Specification Sections 01300 “Submittals” and Specification Section 01730 “Operation and Maintenance Data”.

A. Certified Pre-Removal Field Inspection Reports for each pump (prior to removing pump).
   1. Field Tests: Furnish reports of field tests. Prior notification of field tests shall be submitted for all equipment at least two weeks before the tests.

B. Shop Inspection/Repair Assessment Report for each pump. The report shall include photos, detailed inspection results, conclusions, recommendations and repair proposal for repairing each pump. The report shall be furnished no later than 28 calendar days after receipt of each pump.

C. Installation Report: Furnish to ENGINEER copies of certified report prepared by pump repairer’s technical representative certifying satisfactory installation, operation, and in service placement of units.
   1. Field Tests: Furnish reports of field tests. Prior notification of field tests shall be submitted for all equipment at least two weeks before the tests.
   2. Installation Report: Furnish to ENGINEER copies of certified report prepared by pump manufacturer’s technical representative certifying satisfactory installation, operation, and in service placement of units.

D. Miscellaneous Shop Drawings
   1. Pre-Removal and Post-Repair Field Performance Test Procedure Project schedule updates at critical milestones and no less than monthly updates.
   2. Painting schedule & vendor application instructions for each pump: Submit list indicating major items to be painted, preparation, paint manufacturer, product datasheets and specifications, designation, curing requirements, and dry mil thickness.
   3. Paint samples demonstrating exterior paint color matches pre-existing paint color for each pump.
   4. A copy of paint/coating test results with manufacturer’s tolerances listed for each product used.
   5. Detailed bill of materials, data sheets of parts. Data sheets shall designate materials by ASTM standards.
   6. Submit certified and witness shop test procedures, the equipment to be used, plan and section drawings of the testing arrangements and manufacturer’s sample form for reporting performance test results at least two weeks before the tests. The test shall conform to ANSI/HI 1.6.
   7. Certified performance curves after rehabilitation showing pumping head, capacity, horsepower and efficiency from shut-off to beyond minimum operating head.
   8. Submit certified performance curves at least two weeks prior to shipping the units from the factory/repair shop. Provide copies of the data recorded during the test and methods of data reduction for determining certified tests results.
   9. Field test procedure.
   10. Pump Repairer’s delivery, storage, and handling requirements.
   11. Pump Repairer’s installation instructions and O&M recommendations.

E. Certificates:
   1. Metallurgical certificate from foundry for castings of new pump components, including such as impellers and shafts.
   2. Material Certification:
      a. Provide certification from the repairer that the materials of construction specified are recommended and suitable for the service conditions specified and indicated. If materials other than those specified are proposed based on incompatibility with the service conditions, provide technical data and certification that the proposed materials are recommended and suitable for the service conditions specified and indicated including an installation list of a minimum of five (5) installations in

operation for a minimum of five (5) years. Provide proposed materials at no additional cost to OWNER.

b. Where materials are not specified, provide technical data and certification that the proposed materials are recommended and suitable for the service conditions specified and indicated.

3. Certification of welders in accordance with American Welding Society (AWS).
4. Certification of disinfection completion.
5. NSF 61 certificate for coating product used for pump interior.

1.07 QUALITY ASSURANCE

A. System Coordination:

1. CONTRACTOR retains overall responsibility to properly install, adjust, test, and place in operation the pump units.
2. The repair of all pumps under this Specification shall be by a single pump repairer. The pump repairer shall furnish the pumps as a complete and integral package to insure proper coordination, compatibility, and operation of the system.
3. CONTRACTOR to coordinate pump work and other work related to the high service pump station to minimize disturbance to normal plant operation.

B. Pump Repairer's Qualifications

1. The CONTRACTOR shall provide evidence to the ENGINEER that the Pump Repairer has minimum 5 years' experience in repair of horizontal split case centrifugal pumps, 10 MGD or larger, which have been successfully utilized in municipal water/wastewater applications. Pump Repairer shall have experience working with DeLaval Pumps. Pump Repair shall perform fabrication and engineering work in house.
2. The Pump Repairer shall provide at a minimum a reference list of at least 5 different installations in municipal water/wastewater applications in the continental United States, where the repairer has supplied equipment substantially similar in design and characteristics to that proposed here. The installations listed must:

   Be at least equal to 1, 000 horsepower.
   Have been in continuous operation for last 5 years.
   Include in the list the name, address, and telephone number of the OWNER, horsepower, and the time in operation.

C. Pump Repairer's Representative

1. The CONTRACTOR shall provide the services of a qualified pump repairer's service technician to:
   a. Assist in the removal and installation of the equipment;
   b. Measure the as found alignment of the pump and motor;
   c. Measure the as found level of the pump and motor mounting pads;
   d. Check the installation before the equipment is placed into operation;
   e. Assist in the performance of field tests;
   f. Assist in start-up of equipment; and
   g. Train the plant operations and maintenance staff in the care, operation and maintenance of equipment.

2. Unless otherwise authorized by the ENGINEER, the pump repairer's technician shall be a direct employee of the equipment repairer or a factory/shop trained technician, with at least five (5) years of experience in the installation, testing and start-up of equipment of the type provided under this Specification. Provide resume of the proposed technician for ENGINEER's approval before commencing of work. The manufacturer/repairer's sales and marketing personnel will not be accepted as manufacturer/repairer's technicians.
3. In addition to the above, the CONTRACTOR shall provide the services of person(s) authorized by the pump repairer to witness the unloading at the Site and, if stored, placing into storage the equipment provided under this Specification, and to ascertain the condition of said equipment. Pump manufacturers/repairer' sales and marketing personnel may be accepted as authorized person(s) to perform these specific tasks.

D. Painting: The equipment provided under this Specification shall be shop cleaned, primed, and finish painted, and field painted in accordance with the requirement of Specification Section 09902 “Painting and protective coatings”.

1.08 DELIVERY, STORAGE AND HANDLING

A. Pump repairer shall carefully prepare the pump for shipment to minimize the likelihood of damage during shipment. Cavities shall be drained of water. Equipment shall be properly supported and securely attached to skids. Openings shall be covered in a manner to protect both the opening and interior.

B. Deliver, unload, and store products on site in a manner that prevents damage. Use special care to prevent damage from temperature and condensation.

1.09 PROJECT CONDITIONS (NOT USED)

1.10 SPARE PARTS

A. For each pump, provide spare parts that are identical to or interchangeable with similar parts installed.
   1. One set of all pump shaft bearings.
   2. One set of all special tools required.
   3. One complete set of shaft sleeves.
   4. One complete set of gaskets.
   5. One complete set of wearing rings with fasteners.

B. All spare parts shall be plainly tagged, marked for identification and reordering and shall be delivered properly boxed.

PART 2 PRODUCTS

2.01 PUMP REPAIRER

A. Smith Pump Company

B. Or approved equal

2.02 MATERIALS AND/OR EQUIPMENT

A. General
   1. All replacement parts shall be of same materials, classifications, grades and performance standards as the original parts. Limited O&M data of existing pumps are available upon request. Notify and receive approval from the OWNER for any proposed deviations in materials or parts and provide certificates per Paragraph 1.06.
   2. Existing pumps are horizontal split case bottom suction centrifugal pumps powered by either air or water cooled motors.
   3. After rehabilitation, each pumping unit shall yield stable performance within the specified noise and vibration limits throughout operating range.
   4. Pumping units shall be rehabilitated in accordance with the latest Hydraulic Institute Standards.
   5. Pumping assemblies, including pump and motor, shall operate within vibration and bearing temperature limits over the full allowable operable range of the pump performance, as required by applicable Hydraulic Institute Standards. The Contractor shall confirm existing motors will not be non-overloading under any condition of operation specified and indicated without operating in the motor service factor, during the pre-removal test.
   6. Apply a never seize compound to all bolts.
   7. Provide isolation sleeves and washers when stainless steel hardware is used on dissimilar materials.

8. The pumps shall be capable of temporary operation at or near shut off head for 3 minutes to allow for opening and closing of the pump discharge control valve as the pump starts or stops.

B. Painting: Per Specification Section 09902, “Painting and Protective Coatings”, unless otherwise specified in this specification section:
   1. Provide additional shop paint coating for touch-up to all surfaces after testing is completed and equipment accepted.
   2. During installation and after approved testing by the ENGINEER, apply touch-up paint to all scratched, abraded and damaged shop painted surfaces. Coating type and color shall match shop painting.

2.03 SOURCE QUALITY CONTROL (NOT USED)

PART 3 EXECUTION

3.01 PRE-REMOVAL INSPECTION AND PUMPING TESTS

A. The Contractor shall obtain calibrated instruments to measure: flow, head, shaft speed, vibration, temperature and sound level on the pump and motor bearings for at least 4 hours, after equipment reaches normal operating temperatures. In the event that the Contractor sees a potential cause of additional damage to the pump or danger to those performing the testing, the pump test shall be stopped promptly and the field conditions shall be documented in details in the Pre-Removal Report.

   1. The flow shall be measured using the existing flow meters installed on the pump discharge pipe. Contractor shall coordinate with Owner to assure proper calibration of the meters before the testing.

   2. The Contractor shall determine pump head and power consumption for at least five flows using pump control valve to throttle, at 100% speed (60Hz). There shall be at least 3 psi separation between adjacent measured heads. One operating point must be measured when the pump control valve is fully open. These measurements shall all be completed no later than the 8 hour testing timeframe. A pre-removal pump performance curve and wire-to-water efficiency curve shall be produced based on interpolation of the five measurement points.

   3. Prior to the above test, the Contractor shall coordinate with the OWNER and obtain a thorough understanding of the operating/control methodology of the pump control valves. The Contractor shall develop a methodology to manually throttled either locally and remotely to achieve the desired discharge head pressure without inadvertently shutting off the pumps or adversely affecting the pump operation.

   4. Prior to the above test, the Contractor shall coordinate with the OWNER and obtain a thorough understanding of the start up/stop sequence of each pump/motor, and the settings of related parameters, including the settings of pump control valves

   5. The Contractor shall measure overall sound pressure levels at 3 feet horizontally from the surface of the equipment at 4 locations. Submit the layout of the 4 locations in the pre-removal report.

   6. The Contractor shall measure overall sound pressure level at 3 feet horizontally from the surface of the equipment at mid-point height and at 4 different locations in plan view.

   7. Vibration Monitoring:
      a. The Contractor shall measure the vibration amplitude (filtered and unfiltered, in rms) at five planes each (ODEx, y, z, DExy) for the pump and motor. Contractor shall report results in inspection report. Pumps do not have built in vibration monitoring, so Contractor will need to provide this equipment. As part of the

report, the Contractor shall record the position of the pump control valve and note any as-found throttling that could be causing vibrations, if any.

B. The Contractor shall measure “as found” shaft and coupling runout in mils t.i.r prior to uncoupling.

C. The Contractor shall remove the coupling guard and verify the existing pump and motor alignment, utilizing a laser-type shaft alignment system that is capable of being downloaded to a data logger that can be placed into a database. Verify both the angular and parallel alignments of the shafts. Include results of verification in the report.

D. The Contractor shall note any piping strain and preload applied to the pump’s thrust harness as unit is disconnected.

E. The Contractor shall disassemble the rotating element sufficiently to make accurate measurements of the following dimensions. Contractor shall take digital photos during the disassembly and inspection process of at least these components:
1. wear ring diameters and resulting clearances.
2. bearing shell condition and shaft journal diameters.
3. impeller diameter.
4. impeller bore and shaft diameter at bore.
5. impeller wear ring od’s and case ring id’s w/ resulting clearances.
6. pump shaft straightness.
7. sleeve O.D.'s & I.D.'s
8. note problems, special conditions, and/or unusual wear or corrosion. Determine if impeller requires special repairs.

F. The Contractor shall measure and record shaft, sleeve, impeller wear ring, and impeller OD runout while rotor is still in bottom half casing.

G. The Contractor shall inspect all nuts and bolts on the pump volute, discharge and suction flanges. Deficient nuts and bolts shall be replaced.

H. The Contractor shall provide detailed “As Found” inspection report on each pump including measured values, conclusions, recommendations, and color photos.

3.02 REMOVAL OF PUMP UNITS

A. Decoupling of Pump and Motor:
1. The OWNER will de-energize the motors. Contractor shall physically disconnect the wire connection of the motor and motor space heater.
2. The Contractor shall de-couple the motor and pump after the alignment is measured and verified.

B. Removal of Pump:
1. Space is limited around the loading/unloading bay of the High Service Pump Station. CONTRACTOR to verify his or her vehicle can be maneuvered around the area without damaging properties of the OWNER.
2. A bridge crane is available in the High Service Pump Station. If it is CONTRACTOR's desire to use this bridge crane for execution of his work, the bridge crane shall be inspected and load tested by a third party, at no additional cost to OWNER, before and after CONTRACTOR's use to ensure that the condition of the bridge crane is suitable for CONTRACTOR’s activities and it has not been damaged or compromised by CONTRACTOR's use. CONTRACTOR shall provide certifications of crane load tests to OWNER prior to using the crane, and within two (2) weeks after crane is no longer needed for execution of his work. Any damages to the crane by CONTRACTOR shall be repaired at no additional cost to OWNER.
3. The Contractor shall remove the air release valve mounted on top of the pump casing and store the air release valve properly for reinstallation.

4. The Contractor shall remove casing top half, impeller and bottom casing half from pump case in separate overhead crane lifts. Impeller must be placed on Contractor provided cradle.
5. The Contractor shall remove pump from base.
6. The Contractor shall measure and record level at the pump foot mounting pads after pump removal, in two planes with a machinist's level, precision straight edge, and 1-2-3 blocks. The Contractor shall report any out-of-level values that exceed 0.002 inches/12 inches span. The Contractor shall measure and confirm the levelness of the motor mounting without removal of motor.
7. The Contractor shall furnish truck with trailer sufficient to transport the pump to Contractor's shop.
8. The Contractor shall provide temporary supports for the discharge control valve and piping while the pump is removed from service.
9. The Contractor shall provide two blind flanges after each pump removal, with new nuts and bolts to protect the pump station from accidental flooding. Flanges shall be class F and shall be left with Austin Water after pump is re-installed.
10. The Contractor shall supply shipping skid designed to support any size high service pump rotating element at this station, and transport pump to repair shop.
11. The Contractor shall inspect condition of pump base (including drain troughs), anchor bolts, and grout to ensure it meets installation specifications. The Contractor shall re-paint the base after the pump is removed.
12. The Contractor is responsible for any damage caused during the removal or transportation of pump components.
13. If destructive removal of parts or materials is required, the Contractor shall obtain written approval from the OWNER prior to proceeding with the destructive removal work.
14. Note any flange strain, pipe/saddle degradation or leaks.

3.03 PUMP UNITS TEARDOWN, INSPECT, REPORT AND REPAIR

A. Shop Inspection:
1. The Contractor shall measure and record "As Found" impeller unbalance.
2. The Contractor shall measure and record "As Found" dimensions of shaft journals, sleeves, and wear rings.
3. The Contractor shall bring to the attention of the OWNER any other abnormalities found, and make a complete recommended list of repairs based on industry best practice.
4. The Contractor shall also recommend any changes that could improve the hydraulic efficiency of the pump, even though these changes are at the Owner's discretion.
5. The Contractor shall furnish a Shop Teardown & Inspection Report per pump with photos, inspection results, conclusions, and recommendations no later than 21 calendar days after receipt of the pump. The report shall include:
   a. Summary of key product information (location, make and model, age, serial number, etc.)
   b. Scope of work statement/background
   c. Summary of performance test/known issues
   d. Captioned photos of pump removal, description of issues
   e. List of components received
   f. Captioned pictures of pump components with descriptions of
      1) Bearing to housing fits: opposite drive end bearing housing bore, bearing race O.D., clearance found, and clearance tolerance.
      2) Bearing to shaft fits: drive end (babbitt), opposite drive end (babbitt), opposite drive end bearing race ID, shaft mount O.D., clearances found, and clearance tolerances for each location.
      3) Wearing ring clearances: drive end and opposite drive end casing wear ring I.D., impeller skirt O.D., clearances founds, clearance tolerances.
   g. Parts identification showing number and material of parts.
   h. Parts inspection table, including columns for: ref #, location (end), reuse or new, part, basic material, brand, part #, quantity.

i. Conclusion, including a list of recommended repairs and anticipated pump performance after repairs, and noting any changes from original specified scope of work.

j. Proposed schedule to make repairs and reinstall pump. Include long lead items in schedule.

6. All parts shall be replaced with like for like parts and materials based on OEM and O&M manual requirements. Any request for deviations in materials or parts must be approved by the owner. Owner acceptance of these changes does not relieve the contractor of liability for failed startup and operation of the pump.

7. The Owner shall approve or reject the Contractor's proposal for repairs, based on either excessive cost or deficient quality of the proposed repairs. If the Owner accepts the proposed repairs, the Contractor shall proceed with the work and is authorized to proceed into startup services. If the Owner cannot reach an agreement with the Contractor, all pump materials, parts and equipment will be returned to the owner at no additional cost, and the Contractor shall only be paid for the removal, transport, and inspection of the pump. At that time, the City reserves the right to re-bid this contract.

B. REPAIR PUMP:

1. This scope includes detailed assessment of the pump after its removal from the site. Prior to being authorized to make repairs, a revised repair estimate and report shall be issued to the Owner for review. The report shall include any additional work recommended by Pump Repairer.

2. The scope of repair work for each pumping unit shall include:

a. Disassemble rotor and inspect condition of shaft.

b. Replace two axial anti-friction bearings.

c. Replace thrust bearing.

d. Replace case and/or impeller wear rings

e. Replace sleeves with new bronze sleeves. The Contractor shall replace grease seals, gaskets, and all o-rings.

f. Machine five vibration transducer mounting surfaces each with a drilled and tapped for a ¼"-20 thd bolt. Provide five threaded plugs to seal the five new vibration sensor ports.

g. Clean, polish, and straighten pump shaft to 0.003" t.i.r. anywhere on the shaft.

h. Perform 2-plane dynamic balance on impeller to meet ISO Grade G2.5 precision grade balance or better. Contractor shall provide a Balance Certificate.

i. Assemble rotating assembly ready to install in case.

j. Install new bushing and making certain that the proper bushing is installed according to the rotation on the specific side of the pump. The bushing shall be:

1) Enviroseal Packing Version, Split, Spiral Trac Bushing, with the following item numbers:

a) Chesterton Item # 337854 - Enviroseal # PI 5500 LS 6760 (ESC) 12-0032 (counter clockwise rotation);

b) Chesterton Item # 140885 – Enviroseal # PI 5500 RS 6760 (ESC) 12-0032 (clockwise rotation)

2) SEPCO ML2225 Packing

3) Flowserve Solids Excluder Bushing

k. Install 3 rings of Chesterton 1730 packing with 5/8" cross section after Spiral Trac Bushings.

l. The two jobs directly above shall be overseen by a qualified field service representative. The field service representative must verify the work was performed to their standards in writing.

m. Reassemble rotor, and two plane dynamic balance to ISO G2.5.

n. Replace all gaskets and o-rings.

o. General machine work and repair shall consist of, but not limited to, balancing, welding, straightening, grinding, custom part manufacturing, shaft rebuilding and fabrication, sand blasting, and coating.

p. Typical repairs consist of rebuilding or replacing damaged parts like wear rings, shaft sleeves, bearings, packing stuffing boxes, packing, etc.

C. REPLACE IMPELLERS (Allowance Item Nos. 1, 2 and 3)

1. All requirements defined in this section apply to HSP-023 (Allowance Item No. 1), HSP-024 (Allowance Item No. 2) and HSP-026 (Allowance Item No. 3).
2. Upon shop inspection, if it is determined by the Pump Repairer that the pump impeller of the corresponding pump needs to be replaced, provide new pump impeller matching the construction and materials of existing impeller and associated components.
3. Provide statically and dynamically balanced impellers to balance quality grade G2.5 in accordance with ISO 1940-1973, “Balance of Rotating Rigid Bodies”.
4. Provide certificate of dynamic balancing of replaced impeller.

D. COATINGS

1. Interior Coating: The Contractor shall coat the interior of the casing halves with either:
   a. TNEMEC Series 140 Pota-Pox potable water epoxy to a total dry film thickness of 5 mils for the primer and 6 mils for the top coat.
   b. Chesterton ARC PW potable water epoxy to a total dry film thickness of 10 to 15 mils per coat, with 2 coats with different colors per coat to ensure coverage. No primer required.
2. Exterior Coating: The Contractor shall coat the exterior of the casing halves, base plate and bolts with either:
   a. TNEMEC Hi-build Expoxoline II Series N69 to a total dry film thickness of 5 mils of primer and a total dry film thickness of 6 mils for the top coat. The Expoxoline product be color matched to the existing paint color of the pump.
   b. Chesterton ARC PW potable water epoxy to a total dry film thickness of 10 to 15 mils in a single coat. No primer required.
3. All coatings provided for use on this project in the field or from equipment suppliers shall be in compliance with Federal, State, and local laws, regulations and ordinances related to items such as lead, chromate, carcinogens and volatile organic compounds. All coatings must be NSF Rated for potable water use.
4. The Contractor shall provide factory finished exterior coatings using manufacture’s standard if available.
5. It is assumed that lead paint is present due to age of pumps. A certified lead paint specialist, as part of the Contractor’s team, shall remove and dispose of the existing paint. Reference specification section 01045-1 for additional requirements.
6. Painting of the pump shall be completed in a climate controlled environment with only touchups performed in the field as required. Painting of the base shall be completed in the field. If adverse environmental conditions are present, the Contractor shall conduct the painting work in a tent structure with proper temperature/humidity controls.
7. Color: The Owner reserves the right to select colors. Color shall match existing color on exterior of pump.
8. Workmanship
   a. The Contractor shall furnish workers who perform quality work and who are experienced and knowledgeable in the surface preparation and application of high-performance industrial coatings. The Contractor shall submit list of five similar projects which have been prepared and coated by the personnel which the Contractor proposes to employ for this project.
   b. The Contractor shall submit manufacturer’s written instructions on cleaning and coating prior to any surface preparation or coating.
   c. The Contractor shall finish coats to be smooth, free of brush marks, streaks, laps or pile up of paints, and skipped or missed areas. Finished metal surfaces shall be free of voids or pinholes in any coat when tested with a low voltage detector.
   d. The Contractor shall not paint nameplates, serial number bases, chrome, or bronze trim. The Contractor shall clean off any excess paint that impairs convenient removal of covers on gauges, instrumentation, or other equipment fitted with doors or covers.
   e. The Contractor shall perform routine quality control testing on each coat to ensure the integrity of the protective coating. At a minimum, the following tests shall be performed.
      - Dry film thickness.
      - Holiday testing.

- Any additional tests as recommended by coating manufacturer or required in Specification Section 09902.

E. Additional repairs at City's discretion if required and should be included in the cost of the Contractors' bid

1. Apply a ceramic wear coat to the pump's upper and lower half casing waterways (Allowance Item No. 4):
   a. Grit blast and repair any significant pitting in the casing water way with a proven and NSF 61 certified metal repair epoxy compound from Belzona or Chesterton.
   b. Grit blast and coat entire waterway with Belzona 1341N Super Metal Glide epoxy, or equivalent to the thickness specified by the OEM.
2. Restore the Babbitt surface for Babbitt type bearings (Allowance Item No. 5):
   a. Replace Babbitt in bearing shells and hand scrape. For babbitt bearings, the Contractor shall verify proper bonding of babbitt to the backing material using ultrasonic thickness (UT) or other acceptable industry standard test. Babbitt bearings shall be repaired or replaced with same type material. Babbitt bearing repair using over spray or pooling will not be accepted.

F. INSTALL PUMPING UNIT

1. The Contractor shall provide crew, tools, and rigging to haul upper and lower casing halves and repaired rotating element and mechanically install pumping unit, including connections of all supporting mechanical systems.
2. The Contractors shall test piping connections to prove the pump nozzles are installed with the pipe in a free supported state without the need to apply vertical or horizontal pressure to align piping with pump nozzles, by removing all flange bolts and checking flange to flange alignment.
3. The Contractor shall replace suction and discharge gaskets.
4. The Contractor shall replace nuts and bolts that do not pass inspection and field paint new nuts and bolts.
5. The Contractor shall install pump while taking care not to introduce piping strain.
6. The Contractor shall laser-align motor half coupling to pump half coupling. A final laser alignment report shall be provided.
7. The Contractor shall use City supplied lubricants.
8. Any damage to pumps due to debris, tools, etc., or transportation and installation shall be the responsibility of the Contractor at no additional cost to the City.
9. Check settings of the pumps control valve and air release valve.

G. MOTOR COUPLING

1. The Contractor shall install the coupling between motor and pump per manufacturer's recommendation and make ready to run.
2. To verify pump and motor alignment, utilize a laser-type shaft alignment system that is capable of being downloaded to a data logger that can be placed into a database. Verify both the angular and parallel alignments of the shafts. Maximum departure from true center not to exceed tolerances established by the coupling manufacturer.
3. Adjust motor as specified to achieve proper alignment.
4. Alignment test to be performed in the presence of the OWNER.
5. All labor, materials, and test apparatus necessary for conducting the above tests to be furnished by the CONTRACTOR at no additional cost to the OWNER.
6. Contractor is responsible for any damage to the motor, or equipment that is damaged during the coupling process.

H. STARTUP TEST AND OPERATION TEST:

1. Startup: Perform bump test, run motor uncoupled and test, coupled to pump and run and test, perform trim balance if necessary. Provide final startup report.
   a. Provide startup procedures for Owner approval at least 14 days before pump is returned to site.
   b. Contractor shall provide the Owner 14 days of notice prior to startup or testing of the equipment.

c. The pumping unit shall be field tested to demonstrate conformance with operating requirements, over its specified operating range specified in Attachment “A”.

d. Disinfection of pumps for potable water services:

1) Prior to packaging and preparation for return to the city, all repaired or replaced pumping equipment or related parts supplied otherwise handled or manipulated by the Contractor shall be cleaned, swabbed with a one percent (1%) hypochlorite solution for a contact time of 10 to 30 minutes. Then, the surfaces will be thoroughly rinsed with potable water after completion of repairs and/or hydraulic or hydrostatic testing. A separate certificate of disinfection completion, signed by the Contractor, shall accompany all affected parts and/or equipment.

e. Prior to the start of any testing, the pump shall be run at full speed for 30 minutes after normal operating temperature is reached. Any modifications to pumps in the field will require re-testing.

f. The contractor shall take vibration, sound, ampere, voltage, pressure, temperature and water flow rate readings during such testing to demonstrate that the pump performance complies with the tolerance criteria of the original O&M manuals.

g. The tolerance criteria of field measured pump performance curve are specified as follows:

1) At least five points shall be measured within the allowable operating range established by Pump Repairer. Adjacent measurement points shall be separated by a minimum of 3 psi. One operating point must be measured when the pump control valve is fully open.

2) Flow measurements shall be via the existing flow meter installed on pump discharge. Owner will provide calibration certificates for the existing flow meters. The measured pump performance after rehabilitation shall meet the following criteria:

a. For each measurement point, the measured pump flow must be within 7.5% of the original pump flow as shown on the original factory rated performance curve in Attachments “B” and “C”, for the same head. Additionally, for each measurement point, the measured pump flow must be no worse than the measured pump flow at the same head, prior to rehabilitation. The flow rates prior to rehabilitation shall be interpolated based on the performance curve produced during the pre-removal test.

b. The Contractor shall calculate the wire-to-water efficiencies as part of the pump performance tests. After rehabilitation, the wire-to-water efficiency when the pump control valve is fully open shall be no worse than that prior to pump rehabilitation.

3) The Contractor shall provide calibrated pressure measurement devices immediately upstream and downstream of the pump. If existing instrumentation in the pump station is insufficiently accurate, the Contractor shall provide calibrated pressure gages that achieve the desired accuracy.

4) The Contractor shall verify the measurement range of the existing flow meters and identify needs to isolate discharge piping as necessary to ensure the measured flow rates fall into the acceptable measurement range of existing flow meter. Contractor shall closely coordinate with the OWNER to minimize interference to normal plant operation.

h. Follow startup procedure ANSI/HI standards 1.1-1.2, 1.3, 1.6, except for the following:

1) Vibration readings, taken at of the 5 points on the pump, shall not exceed 0.200 in/sec RMS, unfiltered for no less than 4 hours in X, Y and Z directions.

2) Submit a written report with analysis conclusion, exhibits of where measurements were made, etc. Report shall contain complete analysis of findings, problems encountered, if any, and probable cause and specific recommendations for corrective action if needed.

3) The vibration analysis indicated above shall be repeated 6 months after signature testing, in the presence of the Owner. A report shall be prepared comparing the results of the 6-month test with the results of the signature tests. Significant worsening of the vibration, to be determined by the Owner, during the 6-month tests shall require corrective action and retesting.

4) The Contractor shall re-check coupling alignment after 1 week of continuous operation within specifications.

5) Test the overall sound-pressure of each pumping unit at the same locations as tested during the Pre-Removal Pump Test. The sound levels measured during startup shall not exceed 85 dB(A) when measured three feet from the motor. This will also be retested in 6 months.

i. After start-up, shut down pump and recheck alignment of coupling. Check in all directions and follow manufacturer's instructions.

j. After completion of all procedures specified above, clean and touch up any damaged coating system as required.

2. Operation Test:

a. Following inspection, startup and adjustment that have been completed by the CONTRACTOR, and supervised/inspected by the pump manufacturer/repairer's technical representative, conduct Operation Test for each individual pump system in the presence of ENGINEER to determine the ability of the pumps, motors, pump control valves and instrumentation to operate like a coordinated system. Check each individual pump system's ability to operate within vibration and temperature limits specified, and to deliver its rated capacity under specified conditions.

b. The Operation Test shall be conducted for seven (7) continuous calendar days. The operating time for the pump in each day shall be no less than four (4) continuous hours. During test, observe and record head, capacity (if possible), motor inputs, noise and vibration. Promptly correct or replace all defects or defective items revealed by or noted during test, at no additional cost to the OWNER, and repeat test until specified results that are acceptable to the Engineer are obtained.

c. After the Operation Test, re-check coupling alignment within specifications.

d. Provide certified field measured performance curves showing conformance of refurbished pump with original factory provided test curves.

1) Show pumping head, capacity, horsepower, and efficiency from shutoff to minimum operating head at operating speed and brake horsepower.

2) Acceptance of field certified curves by the OWNER will be required prior to payment.

3. The OWNER reserves the right to operate all equipment, after complete installation of the equipment, for a period of thirty (30) days before final acceptance and payment. During this period, the Contractor shall make any adjustments deems necessary to obtain satisfactory operating performance of the unit in compliance with the Contract.

I. FINAL REPORTING

1. The Contractor shall provide report on final repair details, and on post installation startup. The Contractor shall compare to pre-removal inspection report values, and include conclusions, recommendations, and color photos. If the final report is not sufficient, or if pump performance is not adequate, then the OWNER can hold releasing additional pumps to the Contractor until the issue is corrected.

2. The final repair report shall, at a minimum document the work performed including, but not limited to the following:

a. Description of all work performed, including before and after pictures.

b. Description of parts installed.

c. Description of modified, redesigned or repaired parts.

d. Babbitt bearing test results.

e. Results of any testing performed.

f. Pump performance curves from pre-tear down and post repair.

g. Final balance reports.

h. Final assembly dimensions.

i. Shop and fabrication drawings.
j. Photographs of relevant as-found conditions, after cleaning & during final assembly.
k. MSDS as required.
l. Material certifications.
m. Copy of all vibration readings.

3.04 FIELD QUALITY CONTROL

A. All instrumentation provided by the CONTRACTOR shall be calibrated:
   1. All calibrations must be within 30 days of the field testing.
   2. The testing will not be started and will not be accepted until the calibrated testing equipment stated above is operational and all certifications have been submitted.

B. If required, take corrective action and have the Pump Units retested to ensure full compliance with the specified requirements. Remove and replace equipment at no additional cost to the OWNER with equipment that will meet all requirements specified and indicated if unable to demonstrate to the ENGINEER that units will perform the service specified and indicated. All costs associated with the field tests or any required corrective action shall be borne by the CONTRACTOR.

3.05 ADJUSTING

A. Manufacturer/Repairer's technical representative to inspect, check, assist in making adjustments if necessary, and approve for placing in operation.

3.08 - 3.10 (NOT USED)

3.11 MEASUREMENT AND PAYMENT

No separate measurement or payment for work performed under this Section. Include cost of same in Contract price bid for work of which this is a component part.

ATTACHMENT "A"

PROCESS PUMP SCHEDULE FOR HIGH SERVICE PUMP STATION

A. DESCRIPTION OF EXISTING PUMPS AND MOTORS

1. UNIT TAG NOs: DA-HSPS-HSP-023, 024, 026
   Pump Manufacturer: DeLaVal
   Pump Model: T1816AD
   Rated Capacity, Q = 11,400 gpm
   Rated Head, H = 345 ft
   Rated Horsepower: 1,500 hp
   Full Load Speed, N = 1,190 rpm
   18 inch Suction Flange, 16 inch Discharge Flange

   UNIT TAGs and Serial NOs:
   DA-HSPS-HSP-023, Serial No.: 706566
   DA-HSPS-HSP-024, Serial No.: 706567
   DA-HSPS-HSP-026, Serial No.: 708345

ATTACHMENT "B"

ORIGINAL FACTORY TEST DATA FOR DA-HSPS-HSP-023, 024

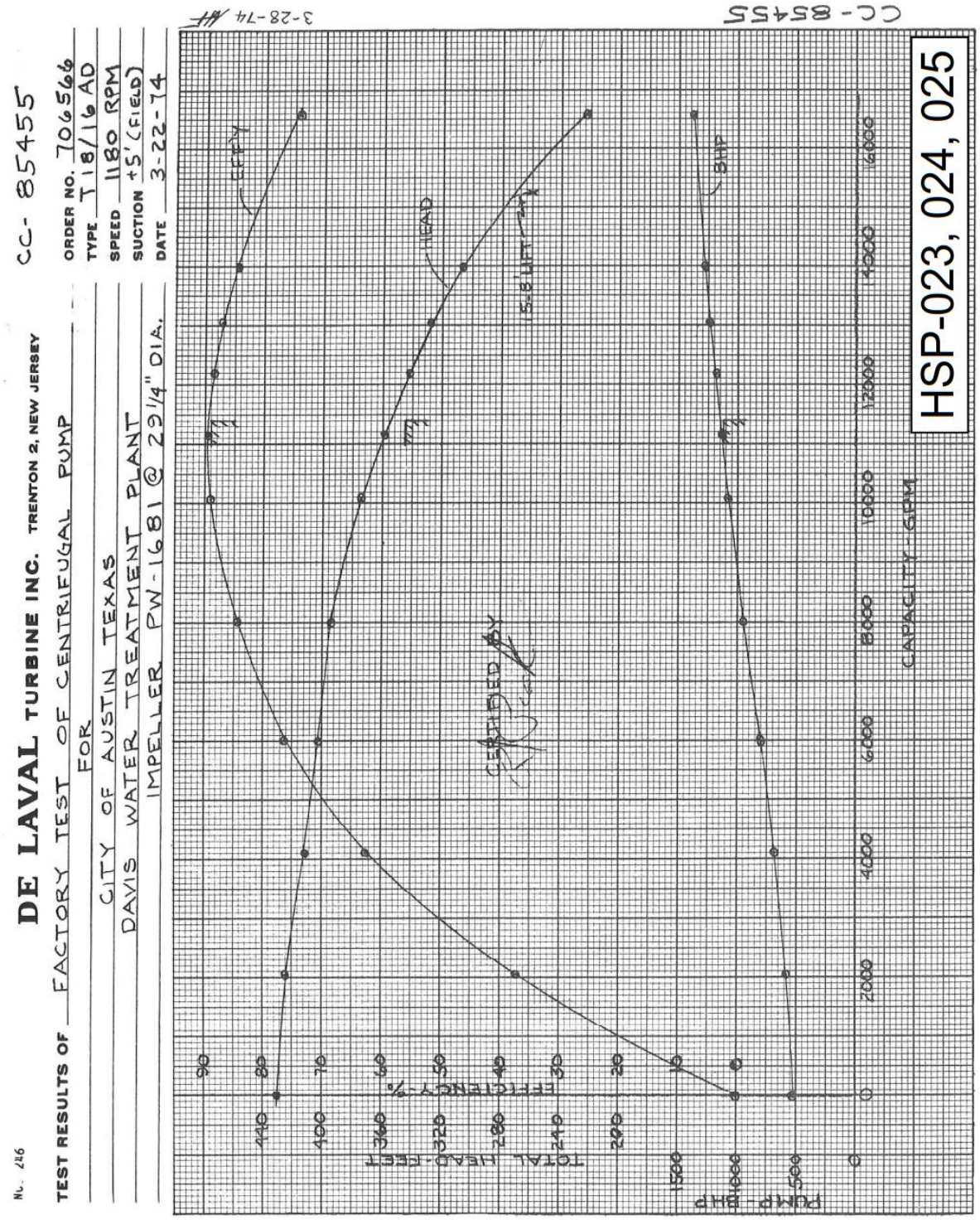

ATTACHMENT "C"

ORIGINAL TEST DATA FOR DA-HSPS-HSP-026

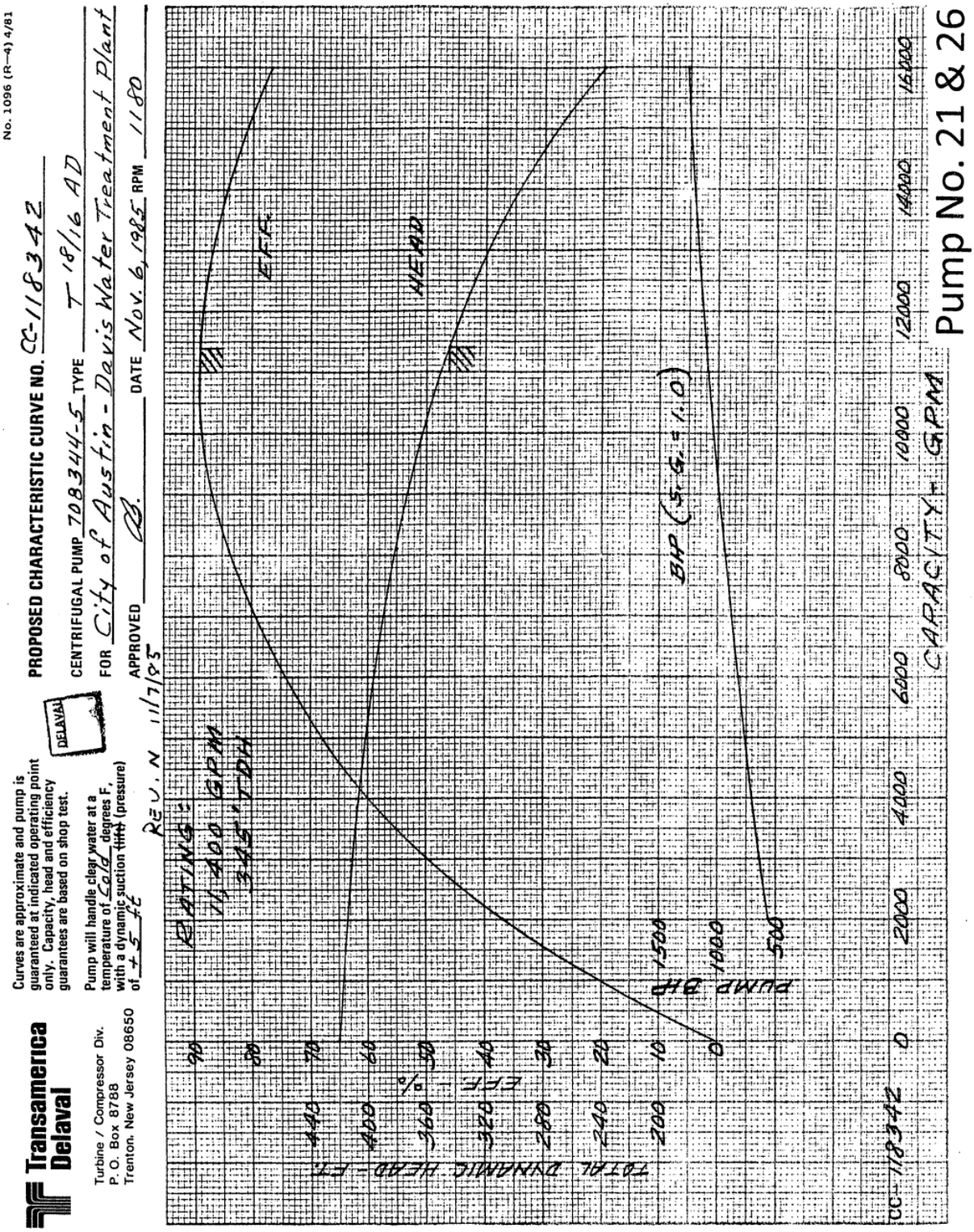

END OF SECTION

THIS PAGE IS LEFT BLANK INTENTIONALLY

SECTION 13390

PACKAGED CONTROL SYSTEMS

PART 1 - GENERAL

1.01 SUMMARY

A. Scope of Work

1. Furnish, install, and place in service the packaged control systems as shown on the PLANS and as specified hereinafter.

1.02 RELATED WORK

A. It is the CONTRACTOR's responsibility for scheduling and coordinating the Work of subcontractors, suppliers, and other individuals or entities performing or furnishing any of CONTRACTOR's Work.

B. Related work as called for on the PLANS, as specified herein or in other Sections of the Specifications.

1.03 QUALIFICATIONS

A. Panels associated with the Packaged Control System (PCS) shall be designed, constructed, and tested in accordance with the latest applicable requirements of ISA, NEMA, ANSI, UL, and NEC standards.

B. Assemble panels in equipment manufacturer's factories. Test panels for proper operation prior to shipment from the manufacturer's factory.

1.04 SUBMITTALS

A. Submit shop drawings in accordance with the requirements of the Contract Specifications. Include:

1. Dimensioned/scaled top and bottom enclosure views, front enclosure elevations, and internal component/device layouts
2. One-line diagrams and wiring diagrams, as applicable,
3. Catalog cut sheets. Include protective device coordination curves and current limiting circuit breaker/fuse peak current let through curves, where applicable. Include color chart for control panel color selection by the OWNER.

B. Sequence of operation. In addition to the operation of the PCS, include the OWNER's process/mechanical equipment that shall also be monitored/controlled by the PCS, where applicable.

C. Testing Related Submittals:

1. Submit ORT test procedures and test results per Section 17100.

2. Submit PAT test procedures and test results per Section 17100.

D. Certified Report: Submit a report prepared by PCS Manufacturer's technical representative certifying satisfactory installation, operation, and in service placement of entire PCS.

1.05 OPERATION AND MAINTENANCE MANUALS

A. Furnish Operation and Maintenance Manuals in accordance with the requirements of Section 01730 of the Contract Specifications. Include:

1. Installation and operation manuals.

2. Renewal parts bulletin.

3. As built drawings, including approved shop drawings.

4. Test data

5. Software program hardcopy (as applicable) for final as-built software.

1.06 TOOLS AND SPARE PARTS

A. Furnish the following spare parts with the equipment for each PCS in conformance with the specifications:

1. One (1) – Set of fuses (minimum 3) for each type and size used for fuses 110V and greater.

2. One (1) - Spare control relay, complete with all accessories, for each relay type used.

3. One (1) - Spare timing relay.

4. One (1) – Sets of overload heaters for each size and type used.

5. One (1) – Selector switch, complete with 2 auxiliary contacts, of each type used (two position, three position, etc.).

6. One (1) – Pilot light, complete with auxiliary contact, of each type used.

7. One (1) - Push button, complete with auxiliary contact, of each type used

8. Ten percent - terminal blocks, of each type and color used.

1.07 SPECIAL MANUFACTURER SERVICES

A. Furnish the services of a qualified, experienced, factory trained technical (non-sales type) representative to advise the Contractor in the installation of the equipment and assist in all PCS testing and start-up. Include checking alignment of parts, wiring connections, operation of all panels, parts (relays, starters, transmitters, process variable monitoring system, etc.). Include time to correct and recheck any discrepancies which are discovered. Also include providing the OWNER with a report certifying that the equipment was installed, properly tested, and set in accordance with the PCS manufacturer's requirements and is in satisfactory operating condition.

Format and quantity of reports shall be per the requirements of shop drawing submittals of the Contract Specifications.

B. Any problems encountered with the operation of equipment, parts, components, etc. installed within the PCS shall be repaired/remedied by the manufacturer's technical representative.

PART 2 - PRODUCTS

2.01 GENERAL

A. Furnish and install all necessary components and wiring for a complete and functional system. Furnish and install additional requirements as follows:

1. Furnish and install the enclosure as hereinafter specified. Mount and wire all components inside of enclosure unless specified otherwise. The enclosure, with all components mounted and wired, complete with all accessories, shall be referred to hereinafter as the Control Panel.

2. Furnish and install the Control Panel configured for single point electrical feed that terminates on a dedicated main circuit breaker inside of the Control Panel. Refer to the PLANS and also the Packaged System Vendor Specification Sections for which the PCS is provided for voltage and phase requirements. The Control Panel shall contain all necessary means, i.e. , control power transformer with primary and secondary short circuit protection/disconnects, uninterruptible power supply, associated wiring, short circuit protection, etc. to derive and distribute the needed control power at the necessary voltages for the entire PCS.

3. Furnish and install circuit breakers for branch circuits distributed from Control Panel as hereinafter specified. Coordinate operation of branch circuit breakers with corresponding main circuit breaker for proper circuit isolation and protection. Note, the main circuit breaker for the control panel per paragraph 2.01.A.2 shall not be considered a branch circuit breaker for the purposes of this Specification.

4. Furnish and install field devices that are fully corrosion resistant, water tight, and resistant to all chemicals associated with the process application. All field devices life cycle, operation, and accuracy shall not be affected by the process application. As a minimum, all field devices shall be U. L. Listed and NEMA 4X rated. The mounting arrangement shall include provisions to enhance operation and maintenance of the system in consideration of the process application.

5. Where devices are required for the functional operation of the PCS but are not specified under Division 17, furnish and install PCS manufacturer’s standard.

6. Where process taps/connections are located higher than 5 feet above finished floor/grade, furnish and install remote mounted indicating transmitters and extend tubing as required to facilitate mounting transmitters no higher than 5 feet above finished floor/grade.

7. For additional construction notes and special requirements, refer to the PLANS and the Specifications.

B. Analog, Control, and Alarm Signaling Requirements

1. Refer to the PLANS and also the appropriate Process Equipment Specification for which the PCS is provided for minimum contacts to be connected to the OWNER's Distributed Control System.

2. All control and alarm circuits shall be 120 volts A.C. Alarm signal contacts shall open to alarm and shall be isolated contacts rated for 5 ampere at 120 volts A.C.

3. The contact configuration (normally open/normally closed) required for proper interface to the OWNER's Distributed Control System shall be furnished and installed at No Additional Cost to the OWNER. Under no circumstances shall contacts of pushbuttons and selector switches shall be connected to the OWNER's Distributed Control System via interposing relays.

4. All analog signals shall be 4 to 20 mA DC. Use "two-wire" type circuits where possible. Furnish and install loop current isolators for each analog signal circuit in which either the field device or Control Panel is located outdoors. Loop current isolators shall be per Section 17200.

5. All RTD signals shall be 100 ohm platinum type.

C. Selector Switches, Pilot Devices, Pushbuttons requirements:

1. A. Pushbuttons and Selector Switches::Heavy duty NEMA 4X/13, oil tight/corrosion resistant, and rated for use in wet locations, NEMA Style full size 30-millimeter (30mm), pushbuttons and selector switches as required by the PLANS. Selector switches and pushbutton shall be furnished with stackable contact blocks. The number of contact blocks shall be as required by the PLANS. The selector switches and pushbutton contacts shall be rated 10-amperes minimum at 120 volts AC. The selector switches shall be furnished with Black Knob Lever Operators. The color of the pushbutton operator shall be as shown on the PLANS, Black otherwise. Selector switches and pushbutton operators and contact blocks shall be Allen Bradley Bulletin 800H. Miniature size stations will not be accepted. Furnish and install each position of each selector switch assembly with one (1) additional Normally Open (N.O.) spare contact and one (1) additional Normally Closed (N.C.) spare contact over the number of contacts required by the PLANS. Additionally, furnish and install each pushbutton assembly with one (1) additional Normally Open (N.O.) spare contact and one (1) additional Normally Closed (N.C.) spare contact over the number of contacts required by the PLANS.

2. Indicating Pilot Lights: Indicating lights shall be Heavy duty NEMA 4X/13, oil tight/corrosion resistant, and rated for use in wet locations, NEMA Style full size 30-millimeter (30mm), Transformer Type Light Emitted Diode (LED), push-to-test type, rated at 120VAC, with legend plate marked as shown on the PLANS. The push-to-test Indicating lights shall be furnished with stackable contact blocks. Lens color shall be as shown on the PLANS. Indicating lights shall be as manufactured by Allen Bradley Bulletin 800H, or approved equal. Miniature size pilot lights will not be accepted. Additionally, furnish 25% spare indicating pilot light assemblies for each type used (minimum of 2 per type). Also, furnish 50% of spare lenses and lamps for each type and color size and type used (minimum of 4 per type).

3. Maintained Action Pushbutton: PUSH-PULL maintained pushbuttons, heavy duty NEMA 4X/13, oil tight/corrosion resistant, rated for use in wet locations, NEMA Style full size 30-millimeter (30mm), pushbuttons and selector switches as required by the

PLANS. Push-Button Station shall be furnished with stackable contact blocks. The number of contact blocks shall be as required by the PLANS. Push-Button Station contacts shall be rated 10-amperes minimum at 120 volts AC. The Push-Button Stations shall be furnished with mushroom-head operators with the lettering engraved on the operators as shown on the PLANS. The color of the Push-Button Station Operators shall be RED and as shown on the PLANS. The control stations shall be as manufactured by Allen-Bradley Bulletin 800H. Each button shall be provided with a hinged polycarbonate corrosion resistant locking cover. Cover shall be capable of closing without actuating the push button. Cover shall be C3 Controls Model LOAFC, or approved equal. Miniature size Push-Button Stations will not be accepted. Additionally, furnish and install each pushbutton assembly with one (1) additional Normally Open (N.O.) spare contact and one (1) additional Normally Closed (N.C.) spare contact over the number of contacts required by the PLANS.

4. Digital Indicators:

   a. Display Type: 4-digit, 1.0-inches high Liquid Crystal Diode (LCD) display, four digits and a floating decimal point

   b. Process Variable Calibration: Engineering units (applicable to the specific system and measured variable) in order to indicate and control the process variable in the same units (i.e., GPM/MGD for Flow, Inches/Feet for Level, PSI for Pressure, °F/°C for Temperature, etc.). The engineering units shall be permanently marked on the surface of the indicators transmitters

   c. Input Power: Two wire loop powered from the indicator input process variable signal.

   d. Accuracy: + / - 0.1 percent of calibrated span

   e. Input Signal Type: 4-20mA proportional to the process variable measured

   f. Enclosure: NEMA-4X corrosion resistant

   g. Manufacturer: Precision Digital (microprocessor-based digital process meter) Model PD686 complete with Panel Mounting Kit PDA6844.

5. Furnish each control station assembly in NEMA-4X 316-Stainless Steel water-tight (gasketed) and corrosion resistant enclosures, as manufactured by Allen Bradley, Hoffman, or approved equal by Rittal.

6. Mount on enclosure door.

D. Wiring: Furnish and install as specified in Section 17200. Group conductors and route in wireways as specified in Section 17200. Wiring for 480 VAC circuits shall be per Section 16200.

E. Identification: Tag enclosure, terminal blocks, and devices (mounted interior and on the face of the enclosure) as specified in Section 17200. Tag all wiring per the requirements of Section 16200.

F. Grounding: Furnish and install grounding per Section 17200.

G. Miscellaneous Accessories:

1. Furnish and install lugs/ power distribution blocks /terminal blocks as required for the connection of the field wiring. Furnish and install terminal blocks per Section 17200.

Furnish and install the necessary means for the termination of the field wiring at No Additional Cost to the OWNER.

2. Furnish and install a Type 2 UL Listed surge protective device for the 120 VAC package control system control power circuitry. Wire, and mount inside the enclosure.

3. Furnish and install 24 volts DC power supply and all other power supplies per the PCS manufacturer's requirements where not specified per Section 17200. Wire and mount inside the enclosure.

4. Where an uninterruptible power supply is needed for the application, the system shall be suitable for up to 100% humidity and up to 50 degrees C ambient temperature, inclusive of battery.

5. Arrange the enclosure internal components to coordinate with the OWNER's conduit entry requirements at No Additional Cost to the OWNER.

2.02 CONTROL PANEL ENCLOSURE REQUIREMENTS

A. Enclosure shall be the totally enclosed, dead front, suitable for back-to-wall mounting. Enclosure shall be adequately sized to contain all of devices required for the PCS in addition to facilitating the termination and routing of all associated PCS field interconnect conduit/wire systems.

B. Unless specifically noted otherwise elsewhere, enclosures shall be rated:

1. NEMA Type 4X, Type 316 Stainless Steel enclosures. Enclosures shall have a smooth, non-brushed finish.

C. Enclosure shall have hinged, gasketed doors. Each door shall have an operating handle. At minimum, Furnish and install quarter turn door latch. Furnish and install three point door latch where available for the enclosure. Furnish and install pad locking means for the door/handle.

D. Where electrical loads external to the panel are served by the PCS provided panel, the following shall apply:

1. Enclosures shall have a flange mounted variable depth or cable type disconnect operating mechanism for operating the main circuit breaker. Provide padlockable disconnect operating handle located exterior to the enclosure. Handle shall be mechanically interlocked with the door to prevent personnel from opening the door when the unit disconnect is in the ON position. Furnish and install handle-door interlock defeating (bypass) feature. Disconnect operating mechanism shall be as manufactured by Square D Class 9422 or approved equal.

E. When sizing the enclosure, consideration shall be given to the enclosure installation location and the environmental aspects associated with the location (indoors, outdoors, etc.). Enclosures shall be sized to adequately dissipate heat generated by the equipment contained therein. Enclosures shall be provided with the necessary climate control devices, i.e. air conditioners, cooling fans, thermostatically controlled heaters for mitigating condensation and humidity, for proper PCS operation and longevity.

F. Furnish and install interior backpanels and sidepanels as required to facilitate interior device mounting. Panels shall be painted white.

G. Where applicable, within the enclosure, designate a region for the 480Vac power distribution sub-components (i.e., circuit breakers, starters, control power transformer, etc.) and locate within proximity to one another. Furnish and install a barrier to segregate the 480Vac power distribution region from the remainder of the panel components.

H. Furnish and install the following additional accessories for each enclosure:

1. For each door:

a. Grounding bonding jumper.

b. Door stop kit .

c. Door data pocket.

2. For free standing enclosures:

a. Furnish and install light fixture per the requirements of Section 17200.

b. Furnish and install wire convenience receptacle per the requirements of Section 17200.

c. Furnish and install lifting eyes.

3. Furnish and install all additional enclosure accessories, mounting hardware, 19 inch rack accessories, etc., as required for a functional PCS.

I. The enclosure shall be a Wall mounted control panel and shall be the Hoffman Concept 316 Stainless Steel 4X Wall Mounted Enclosure Series, or approved equal. Enclosures shall have a smooth, non-brushed finish.

2.03 PACKAGED CONTROL SYSTEM TYPE

A. The PCS shall use the following type of control system type to implement the packaged control system functionality as follows:

1. This type shall only employ the use of hardwired relay logic. This control system type shall not include the use of PLCs whatsoever. Additionally, any type of micro-processor based programmable relay, any relay requiring software download, or any other type of similar programmable relay shall not be used. Any microprocessor based specialty device furnished by the PCS specific to the instrument/sensor installed by the PCS, such as a pressure monitoring system, shall be industrially hardened, suitable for 100% humidity environment, and ambient temperatures up to 140 degrees F, with enclosure rating of IP65 or minimum NEMA 4.

2. Refer to the PLANS and also the appropriate process mechanical Specification for which the PCS is provided for the control system type.

3. Furnish and install relays as specified in Section 17200.

2.04 MAIN AND BRANCH FEEDER CIRCUIT BREAKERS

1. Furnish and install thermal magnetic molded case circuit breakers. Size per NEC. Circuit breakers shall have U.L. listed minimum RMS symmetrical short circuit current rating equal to or greater than that of the bus serving the equipment, unless noted otherwise on the PLANS or in the process mechanical Specifications. Unless shown

otherwise, the minimum RMS symmetrical short circuit current rating shall be 42kA at 480 volts A.C.

B. Furnish and install where specifically shown on the PLANS or for proper circuit protection/coordination:

1. Current limiting circuit breaker.

2. Electronic trip attachment. Trip unit shall be solid state type with field adjustable long time, short time, ground fault and pick up settings.

PART 3 - EXECUTION

3.01 FACTORY INSPECTION AND TEST

A. Each control panel shall be completely assembled, wired, and adjusted at the factory and shall be given the manufacturer's routine shop test and any other additional operational test to insure the functionality, workability and reliable operation of the equipment.

B. Where motor loads are served by panel, size, furnish and install the overload relay heaters based on actual motor nameplate current. Set overload relay settings at maximum values permitted by the NEC 430-32.

C. Where motor loads are served by panel, size, furnish and install the motor space heater fuses based on actual motor space heater load current.

3.02 FIELD INSTALLATION (BY CONTRACTOR)

A. Mount all PCS subcomponents as shown on the PLANS and as recommended by the PCS manufacturer.

B. All field wiring shall be tagged per the requirements of Section 16200. Secure wiring in control panel with plastic ties. Arrange wiring neatly, remove surplus wire, and install abrasion protection for wiring passing through holes or near edges of sheet metal.

C. Clean and vacuum all interior of the equipment. Touch-up and restore damaged surfaces to factory finish.

3.03 FIELD TESTING

A. After field installation of the PCS and prior to energizing any of the process/mechanical equipment controlled by the PCS:

1. Conduct an ORT for the PCS per Section 17100. Submit test results for review and approval. Prior to conducting the ORT, meet all prerequisites associated with conducting the ORT as described in Section 17100. The OWNER may elect to witness the ORT. Coordinate with the OWNER accordingly.

2. Conduct a PAT for the PCS per Section 17100. Submit test results for review and approval. Prior to conducting the PAT, meet all prerequisites associated with conducting the PAT as described in Section 17100. Exception: As the application software for the PCS is provided by the PCS manufacturer, the PCS manufacturer shall lead the PAT software test activity for each PCS panel.

END OF SECTION

THIS PAGE IS LEFT BLANK INTENTIONALLY

SECTION 15061

PIPE SUPPORTS

PART 1 GENERAL

1.01 SUMMARY

A. Section includes: Supports for pipe, fittings, valves, and appurtenances.

B. Provide all tools, supplies, materials, equipment, and labor necessary for the design, furnishing, construction, and installation of all pipe supports, hangers, guides, and anchors shown, specified, or required for a complete and operable piping system.

C. Piping supports for pipe 30″ and larger have been designed for the piping shown. Any modification to the piping, including the addition of flexible joints where not shown will require review and approval of the support system.

D. The absence of pipe supports, restraints and related details for pipes smaller than 30″ on the PLANS does not relieve the CONTRACTOR of the responsibility for providing them. Pipe supports and restraints shown on the PLANS, if any, are shown only to convey the design intent or where specific types and locations are required for a particular location and are not intended to represent a complete support system.

E. Piping supports for plumbing piping and specialties are not covered by this Specification.

1.02 RELATED REQUIREMENTS

A. Other related work as called for on PLANS or as specified elsewhere in this or other TECHNICAL SPECIFICATIONS section.

1.03 REFERENCES

The publications listed below form a part of this specification to the extent referenced. The publications are referenced in the text by basic designation only.

ASTM INTERNATIONAL (ASTM)

A123	Specifications for Zinc (Hot-Dip Galvanized) Coatings on Iron and Steel Products.
A 380	Standard Practice for Cleaning, Descaling, and Passivation of Stainless Steel Parts, Equipment, and Systems.
A575	Standard Specification for Steel Bars, Carbon, Merchant Quality, M-Grades.
A 967	Standard Specification for Chemical Passivation Treatments for Stainless Steel Parts.

MANUFACTURER'S STANDARDIZATION SOCIETY (MSS)

SP-58	Pipe Hangers and Supports - Materials, Design, and Manufacture.
SP-69	Pipe Hangers and Supports - Selection and Application.
SP-89	Pipe Hangers and Supports – Fabrication and Installation Practices.
SP-90	Guidelines on Terminology for Pipe Hangers and Supports.

FEDERAL SPECIFICATIONS (FS)

WWH-171 Hangers and Supports, Pipe.

AMERICAN SOCIETY OF MECHANICAL ENGINEERS (ASME)

B31.1 Power Piping

UNDERWRITER'S LABORATORIES, INC. (UL)

UL-203 Pipe Hanger Equipment for Fire Protection Service.

1.04 (NOT USED)

1.05 SYSTEM DESCRIPTION

A. General:
1. The intent of this Specification is that all process piping systems shown on the PLANS be provided with pipe hangers and supports.
2. CONTRACTOR is responsible for the design of the pipe support system. Reference Paragraph 1.07 B.

B. Design Requirements:
1. Select and design within the specified spans and component requirements.
2. The absence of pipe supports and details on the PLANS does not relieve the CONTRACTOR of responsibility for sizing and providing supports as required for the process piping shown on the PLANS.
3. Meet requirements of MSS SP-58.
4. Structural Design Criteria:
   a. Dead loads imposed by the weight of the pipes and appurtenances filled with water plus any insulation.
   b. Safety factor: Minimum of 5.
5. Design, size, and space support anchoring devices, including anchor bolts, inserts, and other devices used to anchor the supports to withstand the shear and pullout loads imposed by loading and spacing on each support.
6. Framing Support System:
   a. Beams: Size such that beam stress does not exceed 25,000 psi and maximum deflection does not exceed 1/240 of the span.
   b. Column Members: Size in accordance with the manufacturer's recommended method.
   c. Support Loads: Determine based on pipes filled with water.
   d. Electrical Conduit Support: Include provision for electrical conduit routing in the design of the framing support system.
7. The load rating for universal concrete inserts is not to be less than that of the hanger rods they support.

1.06 SUBMITTALS

A. Furnish the following in accordance with Specification Section 01300, "Submittals" and Section 01730, "Operation and Maintenance Data."
1. Product Data: Submit product data characteristics, performance, limitations, and recommended uses.
2. Manufacturer's Installation Instructions.
3. Manufacturer's Compliance Certificate.
4. Furnish drawings of all pipe supports, hangers, anchors, and guides. Drawings of each piping system locating each support, hanger, guide, or anchor. Installation details, materials, loads or forces and deflection of all hangers and supports.

5. Engineered hanger assemblies are to be detailed on 8½″ × 11″ sheets. Each sketch to include a location plan showing the location of the hanger in relation to columns and equipment.
6. Manufacturer's catalog data, literature, and engineering data for all hangers and supports.
7. Certificate of conformance as required in Paragraph 1.07-Quality Assurance.

1.07 QUALITY ASSURANCE

A. Obtain each type of pipe hanger or support from no more than one manufacturer.

B. Piping Support Design:
1. The design, computations, and detail drawings for the pipe supports and hangers are to be prepared by or under the direct supervision of a Professional Engineer registered in the State of Texas.
2. Piping support design engineer is to be ordinarily engaged in the design and analysis of pipe support systems.
3. The design engineer is to develop a detailed support system specific to the piping material, pipe joints, valves, piping appurtenances, system pressures and temperatures proposed as part of the Work.
4. Provide certificate signed and sealed by same engineer stating that the pipe support computations and pipe support drawings are in conformance with the design criteria.

1.08 DELIVERY, STORAGE AND HANDLING

A. Loose parts are to be shipped in crates that are clearly marked as to contents. Ship fabricated supports in largest sections permissible by carrier regulations.

B. All materials are to be inspected for size, quality and quantity upon delivery to site.

C. Store in a covered dry location until time of installation.

1.09 – 1.11 (NOT USED)

PART 2 PRODUCTS

2.01 GENERAL

A. Code Compliance: All piping systems and pipe connections to equipment to be properly supported, to prevent undue deflection, vibration, and stresses on piping, equipment, and structures. All supports and parts thereof to conform to the requirements of ASME B31.1, except as supplemented or modified by these Specifications.

B. Structural Members: Wherever possible, pipes are to be attached to structural members. Where it is necessary to frame structural members between existing members, such supplementary members to be provided by the CONTRACTOR at no additional cost to the OWNER. All supplementary members to be in accordance with the requirements of the building code and the American Institute of Steel Construction.

C. Support Spacing: Supports for piping with the longitudinal axis in approximately a horizontal position to be spaced to prevent excessive sag, bending and shear stresses in the piping, with special consideration given where components, such as flanges and valves, impose concentrated loads. Where calculations are not made or more stringent requirements from pipe manufacturers prevail, suggested maximum spacing of supports are given in the tables below. Vertical supports to be spaced to prevent the pipe from being overstressed from the combination of all loading effects.

D. Pipe Hangers: Pipe hangers to be capable of supporting the pipe in all conditions of operation, allow for free expansion and contraction of the piping, and prevent excessive

stress on equipment. All hangers to have a means of vertical adjustment after erection. Hangers to be designed so that they cannot become disengaged by any movement of the supported pipe. Hangers subject to shock, seismic disturbances, or thrust imposed by the actuation of safety valves, to include hydraulic shock suppressors.

E. Hangers Subject to Horizontal Movements: At hanger locations where lateral or axial movement is anticipated, suitable linkage to be provided to permit such movement. Where horizontal pipe movement is greater than ½-inch, or where the hanger rod deflection from the vertical is greater than 4 degrees from the cold to the hot position of the pipe, the hanger rod and structural attachment to be offset in such a manner that the rod is vertical in the hot position.

F. Spring-Type Hangers: Spring-type pipe hangers to be provided for piping subject to vibration or vertical expansion and contraction, such as engine exhausts and similar piping. All spring-type hangers to be sized to the manufacturer's printed recommendations and the loading conditions encountered. Variable spring supports to be provided with means to limit misalignment, buckling, eccentric loading, or to prevent overstressing of the spring, and with means to indicate at all times the compression of the spring. The support to be designed for a maximum variation in supporting effort of 25 percent for the total travel resulting from thermal movement.

G. Thermal Expansion: Wherever expansion and contraction of piping is expected, a sufficient number of expansion loops or joints to be provided, together with the necessary rolling or sliding supports, anchors, guides, pivots, and restraints. Design to allow the piping to expand and contract freely in directions away from the anchored points and to be structurally suitable to withstand all loads imposed.

H. Heat Transmission: Supports, hangers, anchors, and guides to be so designed and insulated, that excessive heat will not be transmitted to the structure or to other equipment.

I. Riser Supports: Where practical, risers to be supported on each floor with riser clamps and lugs, independent of the connected horizontal piping.

J. Freestanding Piping: Free-standing pipe connections to equipment, like chemical feeders, pumps, etc., to be firmly attached to fabricated frames made of angles, channels, or I-beams anchored to the structure. Exterior, free-standing overhead piping to be supported on fabricated pipe stands, consisting of pipe columns anchored to concrete footings, with horizontal, welded steel angles and U-bolts or clamps, securing the pipes.

K. Submerged Supports: All submerged or partially submerged piping to be supported with hangers, brackets, clips, or fabricated supports and anchors of Type 316 stainless steel, unless otherwise shown.

L. Point Loads: Any meters, valves, heavy equipment, and other point loads on PVC, fiberglass, and other plastic pipes, to be supported on both sides, according to manufacturer's recommendations to avoid undue pipe stresses and failures. To avoid point loads, all supports on plastic and fiberglass piping to be equipped with extra wide pipe saddles or galvanized steel shields.

M. Noise Reduction: To reduce transmission of noise in piping systems, all copper tubes in buildings and structures to be wrapped with a 2-inch wide strip of rubber fabric or similar, suitable material, at each pipe support, bracket, clip, or hanger.

N. Anchors: As specified in Section 05120.

2.02 MATERIALS

A. General:

1. Materials for Supports and Hangers: Materials for pipe supports and hangers to be as specified or shown on PLANS. When PLANS lack such information, hangers, supports, and anchor bolts to be manufactured/fabricated of the following materials:
    a. Type 304 or 316 stainless steel for locations as follows:
        1) Submerged.
        2) Less than 1 foot above the liquid surface.
        3) Below top of channel walls.
        4) Under covers or slabs of channels and tanks.
        5) Other damp locations.
        6) Field welding and fabrication of supports is prohibited.
        7) Shop-fabricated supports:
            a) Finish requirements: Remove free iron, heat tint oxides, weld scale, and other impurities, and obtain a passive finished surface.
            b) At the shop, perform pickling and passivation on all surfaces inside and out in accordance with ASTM A 380 or A 967.
    b. Passivation treatments using citric acid are not allowed. Hot dipped galvanized for all other locations. Hot-dip galvanize pipe supports after fabrication.
    c. Plastic, aluminum, FRP, and other miscellaneous materials: Use where specifically indicated on the Drawings.
2. Fabricate pipe supports of the correct material to the general configuration indicated by catalogs when specified items are not available in specified material.
3. Manufacturer's catalog/figure numbers are typical of the types and quality of pipe supports and hangers to be provided.
4. Special support and hanger details are shown to cover typical locations where standard catalog supports are inapplicable.
5. Furnish fabricated and standard hangers and supports complete with necessary inserts, bolts, nuts, rods, washers, and other accessories.
6. Run piping in groups and parallel to building lines where practical. Provide minimum clearance of 1-inch between pipe and other Work.
7. Install hangers and supports at all locations where piping changes direction.
8. All hangers and supports to be capable of adjustment after placement of piping.
9. Each type of hanger or support is to be the product of one manufacturer. Types of hangers to be kept to a minimum.
10. Vertical Piping to be supported at each floor and between floors by stays or braces designed to prevent rattling and vibration.
11. Chain, wire, strap, or perforated bar hangers are not acceptable.
12. Piping may not be suspended from piping above it.
13. Provide thrust supports designed to be field adjusted and capable of restraining the loads generated by pipe movement due to expansion and contraction.
14. Provide intermediate or guide supports at intervals not exceeding 20 feet.
15. Guide supports to cradle the bottom 90 degrees of the pipe, and the bearing surface is to be contoured to fit the pipe.
16. Unless noted otherwise on PLANS, do not clamp piping to building surfaces; use offset supports.
17. Where concrete supports are shown, apply two layers of 15-pound building felt under the pipe in contact with the concrete. Neatly trim felt around support.
18. Pitch piping to drain when shown on PLANS.
19. Provide lateral and longitudinal support as required to resist lateral loading such as wind.
20. Dissimilar Metals:
    a. Thin walled stainless steel piping is to be isolated from carbon steel by using stainless steel or fiberglass hangers or supports.
    b. Prevent contact between dissimilar metals by using copper-plated, rubber or vinyl coated or stainless steel hangers or supports.

2.03 PIPE SUPPORTS

A. Hanger rods: Sized to match suspended pipe hanger, or as indicated on the Drawings:
   1. Manufacturers: One of following or equal:
      a. For stainless steel piping:
         1) Bergen-Power, Figure 133.
         2) Nibco-Tolco, Figure 103.
      b. For all other piping, unless indicated on the Drawings:
         1) Anvil International, Figure 140.
         2) Bergen-Power, Figure 133.
         3) Cooper B-Line Systems, Inc., Figure B3205.

B. Hanger rods, continuously threaded: Sized to match suspended pipe hanger, or as indicated on the Drawings:
   1. Manufacturers: One of the following or equal:
      a. For stainless steel piping:
         1) Bergen-Power, Figure 94.
         2) FM Stainless Fasteners.
      b. For steel and ductile iron piping:
         1) Anvil International, Figure 146.
         2) Bergen-Power, Figure 94.

C. Eye bolts:
   1. For stainless steel piping:
      a. Type 316 stainless steel, welded and rated equal to full load capacity of rod.
   2. For all other piping, unless indicated on the Drawings:
      a. Welded and rated equal to full load capacity of rod.

D. Welded eyebolt rod:
   1. Manufacturers: One of the following or equal:
      a. For stainless steel piping:
         1) Nibco-Tolco, Figure 101.
         2) FM Stainless Fasteners.
      b. For all other piping, unless indicated on the Drawings:
         1) Anvil International, Figure 278.
         2) Bergen-Power, Figure 93.
         3) Cooper B-Line Systems, Inc., Figure B3210.

E. Adjustable ring hangers: MSS SP-69, Type 7 or Type 9 (system dependent):
   1. Manufacturers: One of the following or equal:
      a. For stainless steel piping:
         1) Nibco-Tolco, Figure 1C.I.
         2) Bergen-Power, Figure 100SS.
      b. For all other piping, unless indicated on the Drawings:
         1) Anvil International, Figure 97.
         2) Cooper B-Line Systems, Inc., Figure B3172.

F. Adjustable clevis hangers: MSS SP-69, Type 1:
   1. Manufacturers: One of the following or equal:
      a. For stainless steel piping:
         1) Cooper B-Line Systems, Inc, Figure B3100 or B3102.
         2) FM Stainless Fasteners, Figure 60.
      b. For all other piping, unless indicated on the Drawings:
         1) Anvil International, Figure 260 or Figure 590.
         2) Bergen-Power, Figure100.
         3) Cooper B-Line Systems, Inc., Figure B3100 or B3102.

G. Adjustable clevis hangers for insulated pipe: Oversize:
   1. Manufacturers: One of the following or equal:

a. For stainless steel piping:
1) Nibco-Tolco, Figure 1A.
b. For all other piping, unless indicated on the Drawings:
1) Anvil International, Figure 300.
2) Bergen-Power, Figure 100EL.
3) Cooper B-Line Systems, Inc. Figure B3108.

H. Brackets: MSS SP-69, Type 32 with back plate; rated for 1,500 pounds:
1. Manufacturers: One of the following or equal:
a. For stainless steel piping:
1) Nibco-Tolco, Figure 30M.
2) Cooper B-Line Systems, Inc., Figure B3066.
3) FM Stainless Fasteners, Figure 98.
b. For all other piping, unless indicated on the Drawings:
1) Anvil International, Figure 195.
2) Cooper B-Line Systems, Inc., Figure B3066.

I. Brackets, heavy duty: MSS SP-69, Type 33 with back plate; rated for 3,000 pounds:
1. Manufacturers: One of following or equal:
a. Anvil International, Figure 199.
b. Cooper B-Line Systems, Inc., Figure B3067.

J. Standard U-bolt: MSS SP-69, Type 24:
1. Manufacturers: One of the following or equal:
a. For stainless steel piping:
1) Nibco-Tolco, Figure 110.
2) Cooper B-Line Systems, Inc., Figure B3188.
3) FM Stainless Fasteners, Figure 37.
b. For all other piping, unless indicated on the Drawings:
1) Anvil International, Figure 137.
2) Bergen-Power, Figure 283.
3) Cooper B-Line Systems, Inc., Figure B3188.

K. Riser clamps: MSS SP-69, Type 8:
1. Manufacturers: One of the following or equal:
a. For stainless steel piping:
1) Cooper B-Line Systems, Inc., Figure B3373.
2) FM Stainless Fasteners, Figure 61.
b. For all other piping, unless indicated on the Drawings:
1) Anvil International, Figure 261.
2) Bergen-Power, Figure 126.
3) Cooper B-Line Systems, Inc., Figure B3373.

L. Pipe clamps: MSS SP-69, Type 4:
1. Manufacturers: One of the following or equal:
a. For stainless steel piping:
1) Nibco-Tolco, Figure 4.
2) Cooper B-Line Systems, Inc., Figure 3140.
b. For all other piping, unless indicated on the Drawings:
1) Anvil International, Figure 212.
2) Bergen-Power, Figure 175.
3) Cooper B-Line Systems, Inc., Figure B3140.

M. Adjustable offset pipe clamp:
1. Manufacturers: One of the following or equal:
a. For stainless steel piping:
1) Nibco-Tolco, Figure 4.
2) Cooper B-Line Systems, Inc., Figure B3149.
3) FM Stainless Fasteners, Figure 63.

b. For all other piping, unless indicated on the Drawings:
1) Anvil International, Figure 100.
2) Cooper B-Line Systems, Inc., Figure B3149.

N. Offset pipe clamp:
1. Manufacturers: One of the following or equal:
a. For stainless steel piping:
1) Nibco-Tolco, Figure 8.
2) Cooper B-Line Systems, Inc., Figure 3148.
b. For all other piping, unless indicated on the Drawings:
1) Anvil International, Figure 103.
2) Cooper B-Line Systems, Inc., Figure B3148.

O. Floor stand or stanchion saddles: MSS SP-69, Type 37. Provided with U-bolt hold down yokes:
1. Manufacturers: One of the following or equal:
a. For stainless steel piping:
1) Nibco-Tolco, Figure 318.
2) FM Stainless Fasteners, Figure 59.
b. For all other piping, unless indicated on the Drawings:
1) Anvil International, Figure 259.
2) Bergen-Power, Figure 125.
3) Cooper B-Line Systems, Inc., Figure B3090.

P. Spring hangers:
1. Manufacturers: One of the following or equal:
a. For stainless steel piping:
1) Bergen-Power, Figure 920.
b. For all other piping, unless indicated on the Drawings:
1) Anvil International, Figure B-268, Type G.
2) Bergen-Power, Figure 920.

Q. One hole pipe clamps:
1. Manufacturers: One of the following or equal:
a. For stainless steel piping:
1) Not used.
b. For all other piping:
1) Anvil International, Figure 126.
2) Carpenter & Paterson, Figure 237S.

R. Welded beam attachment: MSS SP-69, Type 22:
1. Manufacturers: One of the following or equal:
a. For stainless steel piping:
1) Nibco-Tolco, Figure 304.
2) Cooper B-Line Systems, Inc., Figure 3083.
b. For all other piping, unless indicated on the Drawings:
1) Anvil International, Figure 66.
2) Bergen-Power, Figure 113A or 113B.
3) Cooper B-Line Systems, Inc., Figure B3083.

S. Heavy pipe clamp: MSS SP-69, Type 4:
1. Manufacturers: One of the following or equal:
a. For stainless steel piping:
1) Nibco-Tolco, Figure 4H.
b. For all other piping, unless called out otherwise on the Drawings:
1) Anvil International, Figure 216.
2) Bergen-Power, Figure 298.

T. PTFE pipe slide assembly: MSS SP-58, Type 35 with lateral and vertical restraint:
1. Manufacturers: One of the following or equal:

a. For stainless steel piping:
   1) Nibco-Tolco, Figure 426.
b. For all other piping, unless indicated on the Drawings:
   1) Anvil International, Figure 257, Type 3.
   2) Cooper B-Line Systems, Inc., Figure B3893.

PART 3 EXECUTION

3.01 GENERAL

A. General: All pipe supports, hangers, brackets, anchors, guides, and inserts to be fabricated and installed in accordance with the manufacturer's printed instructions and ANSI/ASME B31.1. All concrete inserts for pipe hangers and supports to be coordinated with the formwork.

B. Appearance: Pipe supports and hangers to be positioned in such a way as to produce an orderly, neat piping system. All hanger rods to be vertical, without offsets. Hangers to be adjusted to line up groups of pipes at the proper grade for drainage and venting, as close to ceilings or roofs as possible, without interference with other work.

C. All supports to be securely fastened.

3.02 PREPARATION

A. Locate hangers, supports and accessories to support piping, valves and at all concentrated loads.

B. Locate hangers, supports and accessories within maximum span lengths specified to support continuous pipeline runs.

C. Locate hangers and supports to prevent vibration or swaying and to provide for expansion and contraction.

D. Install items to be embedded before concrete placement.

E. Fasten embedded items securely to prevent movement during concrete placement.

F. Install hanger and support units on piping systems as recommended by manufacturer.

G. Adjust hangers and supports and place grout for concrete supports to bring pipelines to specified elevations.

3.03 INSTALLATION

A. Properly support, suspend, or anchor exposed pipe, fittings, valves, and appurtenances to prevent sagging, overstressing, or movement of piping; and to prevent thrusts or loads on or against connected pumps, blowers, and other equipment.

B. Field verify support location, orientation, and configuration to eliminate interferences prior to fabrication of supports.

C. Carefully determine locations of inserts. Anchor to formwork prior to placing concrete.

D. Use flush shells only where indicated on the PLANS.

E. Do not use anchors relying on deformation of lead alloy.

F. Do not use powder-actuated fasteners for securing metallic conduit larger than 1 inch to concrete, masonry, or wood.

G. Suspend pipe hangers from hanger rods and secure with double nuts.

H. Install continuously threaded hanger rods only where indicated on the PLANS.

I. Use adjustable ring hangers or adjustable clevis hangers, for 4 inch and smaller diameter pipe.

J. Use adjustable clevis hangers for pipe larger than 4 inches in diameter.

K. Secure pipes with double nutted U-bolts or suspend pipes from hanger rods and hangers.
   1. For stainless steel piping, use stainless steel U-bolts.
   2. For all other piping, use galvanized U-bolts.

L. Support spacing:
   1. Support 2-inch and smaller piping on horizontal and vertical runs at maximum 5 feet on center, unless otherwise specified.
   2. Support larger than 2-inch piping on horizontal and vertical runs at maximum 10 feet on center, unless otherwise specified.
   3. Support exposed polyvinyl chloride and other plastic pipes at maximum 5 feet on center, regardless of size.
   4. Support tubing, copper pipe and tubing, fiber-reinforced plastic pipe or duct, and rubber hose and tubing at intervals close enough to prevent sagging greater than 1/4 inch between supports.
   5. For welded, fabricated steel pipe, the support spacing to be designed so that the stress on the pipe does not exceed 5,000 psi. This may be calculated by using the formula:

$$L = \frac{7{,}500\,tD}{32t + D}$$

where: t = Thickness, in.
D = Diameter, in.
L = Safe Span, ft.

M. Maximum deflection of pipe to be limited to 1/360th of the span.

N. Install supports at:
   1. Horizontal bends.
   2. Both sides of flexible pipe connections.
   3. Base of risers.
   4. Floor penetrations.
   5. Connections to pumps, blowers, and other equipment.
   6. Valves and appurtenances.

O. Securely anchor plastic pipe, valves, and headers to prevent movement during operation of valves.

P. Anchor plastic pipe between expansion loops and direction changes to allow axial movement through anchors.

Q. Provide elbows or tees supported from floors with base fittings where indicated on the Drawings.

R. Support base fittings with metal supports or when indicated on the PLANS support on concrete piers.

S. Do not use chains, plumbers' straps, wire, or similar devices for permanently suspending, supporting, or restraining pipes.

T. Support plumbing drainage and vents in accordance with applicable local plumbing code.

U. Supports, clamps, brackets, and portions of support system bearing against copper pipe: Copper plated, copper throughout, or isolated with neoprene or polyvinyl chloride tape.

V. Where pipe is insulated, install over-sized supports and hangers.

W. Install insulation shield in accordance with MSS SP-69, Type 40. Shield shall be galvanized steel unless otherwise specified or indicated on the PLANS.

X. Install riser clamps at floor penetrations and where indicated on the PLANS.

Y. Coat support system components as specified in Section 09902.

3.04 – 3.10 (NOT USED)

3.11 MEASUREMENT AND PAYMENT

Unless otherwise indicated, no separate measurement or payment for work performed under this Section. Include cost of same in Contract price bid for work of which this is a component part.

END OF SECTION

THIS PAGE IS LEFT BLANK INTENTIONALLY

SECTION 15062

DUCTILE IRON PIPE AND CAST IRON AND DUCTILE IRON FITTINGS

PART 1 GENERAL

1.01 SUMMARY

A. This Section includes furnishing ductile iron piping three inches and larger for buried and exposed systems. Soil pipe and fittings are specified in other Specification Sections.

1.02 RELATED REQUIREMENTS

A. Soil pipe and fittings not under this Specification Section.

B. PLANS show pipe class, thickness class, type joints, and service pressure.

C. Other related work as called for on PLANS or specified elsewhere in this or other TECHNICAL SPECIFICATION Sections.

1.03 REFERENCES

The publications listed below form a part of this Specification to the extent referenced. The publications are referred to in the text by basic designation only.

AMERICAN NATIONAL STANDARDS INSTITUTE (ANSI)

ANSI B18.2.1	Square and Hex Bolts and Screws (Inch Series)
ANSI B18.2.2	Square and Hex Nuts (Inch Series)

AMERICAN SOCIETY FOR TESTING AND MATERIALS (ASTM)

ASTM A307	Standard Specification for Carbon Steel Bolts and Studs, 60,000 psi Tensile Strength

AMERICAN WATER WORKS ASSOCIATION (AWWA)

AWWA C104	Cement-Mortar Lining for Ductile-Iron Pipe and Fittings for Water
AWWA C105	Polyethylene Encasement for Ductile Iron Pipe Systems
AWWA C110	Ductile-Iron and Gray-Iron Fittings, 3-inch Through 48-inch (75 mm Through 1200 mm), for Water and Other Liquids
AWWA C111	Rubber-Gasket Joints for Ductile-Iron Pressure Pipe and Fittings
AWWA C115	Flanged Ductile-Iron Pipe with Threaded Flanges
AWWA C150	Thickness Design of Ductile-Iron Pipe
AWWA C151	Ductile-Iron Pipe, Centrifugally Cast, for Water

1.04 - 1.05 (NOT USED)

1.06 SUBMITTALS

A. Furnish in accordance with Specification Section 01300, “Submittals”. In addition to the items specified in Section 01300 “Submittals”, furnish the following:
   1. Detailed installation drawings for piping.
   2. Manufacturer’s descriptive literature for mechanical couplings, mechanical flange adapters, and restrained flange adapters.
   3. Certified test reports for threaded-on flanged pipe in for shop testing required.
   4. Certification per Paragraph 1.07.

B. The City of Austin Water and Wastewater Utility Standard Products Lists (SPL) are considered to form a part of these Specifications. Contractors may, when appropriate, elect to use products from the SPL; however, submittal to the Engineer/Architect (E/A) is still required. If the Contractor elects to use any materials from these lists, each product shall be completely and clearly identified by its corresponding SPL number when making the product submittal. This will expedite the review process in which the E/A, and, if necessary, the Water and Wastewater Standard Products Committee, decide whether the products meet the Contract requirements and the specific use foreseen by the E/A in the design of this engineered Project. The SPL’s should not be interpreted as being a pre-approved list of products necessarily meeting the requirements for a given construction Project. Items contained in the SPL cannot be substituted for items shown on the Drawings, or called for in the specifications, or specified in the Bidding Requirements, Contract Forms and Conditions of Contract, unless approved by the E/A in conjunction with the Water and Wastewater Standard Products Committee. The Standard Product List current at the time of plan approval will govern.

1.07 QUALITY ASSURANCE

A. Certification:
   1. Pipe used in domestic water distribution systems to have Underwriters’ label and be acceptable to local and state authorities without penalty.
   2. Furnish sworn statement that inspection and all tests have been made and meet the requirements of AWWA C151.

1.08 DELIVERY, STORAGE AND HANDLING

A. Shipping:
   1. Piping with flanged ends to be protected with blank wooden or fiberboard flange protectors. Backing flanges are to be secured to the pipe ends.
   2. Pipe spools to loaded and blocked and lagged as necessary to ensure protection against damage during shipping.
   3. Loose parts (couplings, nuts and bolts, gaskets, etc.) are to be shipped in crates that are clearly marked as to contents.

B. Handling and Unloading:
   1. Unload and handle piping in accordance with pipe manufacturer’s instructions.
   2. Transfer of pipe to be accomplished utilizing nylon straps or steel cables.
   3. Exercise extra care when handling flanged pieces due to the additional loads imparted by the flanges. (Insert blocking or other means to support the flanges independently of the pipe to prevent the weight of the flange from distorting the pipe.)
   4. Maintain plugs and flange protectors in openings to protect the pipe.
   5. Do not dump piping off of transport vehicle. Any damaged, chipped, or cracked fittings or pipe to be replaced at CONTRACTOR’s expense.

C. Storage:
1. Store in an area that will avoid damage due to traffic.
2. Exposure to normal weather conditions is acceptable; however, avoid contact with other materials.
3. Store at job site on 4″ × 4″ blocking at 6′ spacing. Piping may be stacked a maximum of three rows high as long as 4″ high spacers are used on 6′ centers.
4. Keep interior of piping free of all foreign matter.

1.09 - 1.11 (NOT USED)

PART 2 PRODUCTS

2.01 MANUFACTURER(S)

A. Pipe:
1. American Cast Iron Pipe Co.
2. McWane Incorporated
3. U.S. Pipe & Foundry

B. Fittings:
1. American Cast Iron Pipe Co.
2. McWane Incorporated
3. U.S. Pipe & Foundry Co.
4. Tyler Pipe
5. Griffin Pipe

2.02 MATERIALS AND/OR EQUIPMENT

A. General: Fabrication dimensions and accuracy of fabrication are responsibility of CONTRACTOR.

B. Pipe:
1. Ductile Iron: Per AWWA C151.
2. Thickness Class:
   a. Aboveground Lines: As shown on PLANS and minimum for flanged pipe per AWWA C115.
   b. Underground Lines: As shown on PLANS, but not less than that indicated within AWWA C150 for internal pressure and depth shown on PLANS.

C. Fittings, Flanges, and Joint Material:
1. Fittings: Per AWWA C110 and C111.
2. Threaded-On Flanges: Per AWWA C115. Use ductile flanges on ductile fittings and cast iron flanges on cast iron fittings.
3. Nonflanged Joint Material
   a. Rubber Gaskets for Water and Sewage Service: Per AWWA C111.
   b. Rubber Gaskets for Diffused Air Systems (10 psi and 210°F Service): EPDM.

D. Restrained Joints:
1. Restrained Joint Pipe:
   a. Pipes 16” and less: Joints to be restrained by Mega-Lug, by EBAA Iron, Inc. or equal by Ford Meter Box Co. Provide Mega-Lug Series 1100 and mechanical joint pipe and fittings, or equal by Ford Meter Box Co. Provide Mega-Lug Series 1700, or equal by Ford Meter Box Co. for push on joints.

b. Pipes greater than 16": Provide one of the following joint restraint systems:
   1) Flex-ring or Lock ring by American Cast Iron Pipe Co.
   2) TR Flex by U.S. Pipe Co.
   3) Super-Lock by Clow Corp
   4) Approved equal; locking gaskets not allowed.

E. Gaskets:
1. For water and sewage, use rubber gasket conforming to the Appendix in AWWA C115.
2. For air service, use 1/8-inch full-face EPDM gaskets, factory cut and conforming to AWWA C111.

F. Bolts and Nuts:
1. Aboveground:
   a. Hex head bolts and nuts:
      1) Bolts per ANSI B18.2.1.
      2) Nuts per ANSI B18.2.2.
   b. Number, size, and length per Table 15.2 of AWWA C115.
   c. Material: Low carbon steel per ASTM A307.
   d. Use studs with nuts on each end for pipe sizes 54″ and larger.
2. Underground:
   a. Tee-head bolts and hexagonal nuts per AWWA C111.
   b. Number, size, and length per Table 11.1 of AWWA C111.
   c. Material: Low alloy steel or high strength cast iron in accordance with AWWA C111.

G. Exterior Coating:
1. Buried Pipe and Fittings: Bituminous coated, not less than 1 mil thick.
2. Exposed Pipe and Fittings: Reference Section 09902 "Painting and Protective Coatings" for coating requirements. Bituminous coated pipe and fittings will not be allowed.

H. Interior Lining (pipe and fittings):
1. Air Service: Unlined.
2. Water Service: Cement mortar lined per AWWA C104/A21.4.
3. Sewage Service:
   a. Interior lining for ductile iron sewer pipe to conform to manufacturer's recommendations.
   b. Minimum lining thickness to be 40 mils regardless of material recommended.
   c. Acceptable lining materials are:
      1) "Corropipe II Wasteliner" by Madison Chemical Industries.
      2) "Polythane" by Madison Chemical Industries.
      3) "Protecto 401" ceramic epoxy by Vulcan Group.
      4) "SP-2000W" by Superior Environmental Products.
      5) "SewPerCoat" by La Farge Calcium Aluminates.

I. Encasement: Polyethylene encasement in accordance with AWWA C105.

J. Mechanical Couplings: Dresser Style 38, long sleeve unless shown otherwise; equivalent by Smith-Blair or Baker. Harness when required for thrust restraint.

K. Flanged Coupling Adapters:
1. Exterior piping: Dresser Style 127 (2″-12″), Dresser Style 128 (14″-96″), equivalent by Smith Blair or equal.

2. Interior piping: Baker Dismantling Joint with harness tie bolts (54”-60”), Dresser Style 127 (2″-12″), Dresser Style 128 (14″-48″), equivalent by Smith Blair or equal.

L. Restrained Flanged Coupling Adapters:
1. Exterior piping: EBAA Iron Series 2100 or equal by Ford Meter Box Co.
2. Interior piping: Baker Dismantling Joint with harness tie bolts (54”-60”), EBAA Iron Series 2100 or equal by Ford Meter Box Co. (all other pipe sizes).

M. Wall Pipes: Unless otherwise shown on PLANS, wall pipes to be cast or ductile iron with an intermediate wall collar. End connections to be as shown on PLANS.

2.03 FABRICATION

A. Flanged Pipe
1. Threaded-On Flanged Pipe:
2. Shop thread, machine tight, and face in machine shop equipped for this type work and conforming to the requirements of AWWA C115.

2.04 SOURCE QUALITY CONTROL

A. Threaded-On Flanged Pipe: Shop test, hydrostatically, each flanged pipe piece at 150 psig.

PART 3 EXECUTION

3.01 - 3.02 (NOT USED)

3.03 ERECTION/INSTALLATION/APPLICATION AND/OR CONSTRUCTION

A. Installation: Per applicable Specification Section.

3.04 - 3.10 (NOT USED)

3.11 MEASUREMENT AND PAYMENT

Unless otherwise indicated, no separate measurement or payment for work performed under this Section. Include cost of same in Contract price bid for work of which this is a component part.

END OF SECTION

THIS PAGE IS LEFT BLANK INTENTIONALLY

SECTION 15063

INSTALLATION OF DUCTILE IRON PLANT PIPING

PART 1 GENERAL

1.01 SUMMARY

A. This Section includes all work necessary to install ductile iron plant piping as specified herein and as shown on the PLANS.

1.02 RELATED REQUIREMENTS

A. PLANS show sizes, elevations, arrangements, special encasement, and specials.

B. Other related work as called for on PLANS or specified elsewhere in this or other TECHNICAL SPECIFICATION Sections.

1.03 REFERENCES

The publications listed below form a part of this Specification to the extent referenced. The publications are referred to in the text by basic designation only.

AMERICAN SOCIETY FOR TESTING AND MATERIALS (ASTM)

ASTM D698	Test Method for Laboratory Compaction Characteristics of Soil Using Standard Effort

AMERICAN WATER WORKS ASSOCIATION (AWWA)

AWWA C105	Polyethylene Encasement for Ductile-Iron Pipe Systems

1.04 - 1.10 (NOT USED)

1.11 SCHEDULING

A. Slab, Floor, Wall and Roof Penetrations:
   1. Order wall pipes and sleeves sufficiently early to ensure they are available for placement in concrete forms.
   2. Verify size and location of building and structure penetrations before forming and placing concrete.

PART 2 PRODUCTS

2.01 PIPE MARKING TAPE

A. Material: Inert polyethylene plastic impervious to known alkalis, acids, chemical reagents, and solvents likely to be encountered in soil.

B. Thickness: Minimum 4 mils.

C. Width: 12 inches.

D. Color: In accordance with APWA Uniform Color Code for Temporary Marking of Underground Utility Locations.

E. Identifying Lettering: Minimum 1-inch high, permanent black lettering imprinted continuously over entire length.

F. Manufacturers and Models:
   1. Reef Industries, Terra Tape.
   2. Allen, Markline.

PART 3 EXECUTION

3.01 GENERAL

A. Examination - Verification of Existing Pipe and Penetrations:
   1. Prior to ordering materials, expose all existing pipes which are to be connected to new pipelines.
   2. Verify the size, material, joint types, elevation, horizontal location, and pipe service of existing pipes.
   3. Inspect size and location of structure penetrations to verify adequacy of wall pipes, sleeves, and other openings before installing connecting pipes.

B. Preparation - New Pipe and Fittings:
   1. Inspect before exposed pipe or fitting is installed or buried pipe or fitting is lowered into the trench.
   2. Clean ends of pipe thoroughly, remove foreign matter and dirt from inside of pipe, and keep clean during and after installation.

C. Coatings:
   1. Install exterior protective coating on all pipes as specified in other Specification Sections.
   2. Color-code and label non-submerged piping per applicable Specification Section.
   3. Damaged Internal Coatings: Repair damaged areas in field with material equal to original coating.

D. Valves: Locate where shown on the PLANS and install per applicable Specification Section.

E. Vents and Drains: Vent the high points and drain the low points of pipelines only where shown on the PLANS.

F. Wall Pipes: Provide wall pipes with thrust collar for all penetrations through concrete walls, floors, slabs, or roofs that are to be watertight unless otherwise specified or shown on PLANS. Coat buried fasteners on wall pipes per applicable Specification Section.

3.02 JOINTING PIPE

A. Bell and Spigot Boltless, Gasketed, Joints:
   1. Preparation of Pipe Ends: Remove from bell and spigot ends all lumps, blisters, excess coal-tar coating, oil, grease, and foreign matter, then wire brush and wipe clean and dry before laying pipe.
   2. Installation of Ring Gasket: Wipe gasket seat in socket with clean dry cloth. Place gasket with large end entering first. Spring gasket into seat in bell so that groove fits over head in seat. Apply thin film of lubricant to inside surface of gasket. Lubricant to be furnished by pipe manufacturer to ensure compatibility with any special coatings.
   3. Setting Spigot: Align spigot with bell and start into bell so that it contacts gasket. Apply lubricant to engaging surface of spigot if necessary. Pipe 6″ and smaller may be driven with a bar lever on end of pipe. For larger pipe, use only approved ratchet-type jacking tool to pull pipe “home”.

B. Mechanical Joints:
   1. Wash socket and plain end with soapy water, then slip gland and gasket over plain end. Face small side of gasket and lip of gland to bell.
   2. Paint gasket with soapy water.
   3. Push gasket into position, being sure it is evenly seated in socket.
   4. Slide gland into position, insert bolts, and run nuts up finger-tight.
   5. Tighten bolts to uniform tightness with ratchet wrench. First tighten bottom bolt, then top, and on around in sequence of 180 apart.

C. Flanged:
   1. Wire brush flange and clean inside of pipe before placing gasket.
   2. Setting Gasket: If non-graphite gaskets are used, apply graphite and water solution to gasket before placing on flange.
   3. Tightening Bolts: After initial alignment, place flange bolts with all heads in the same direction. Tighten flange bolts, each in turn, at a uniform rate around joint until all are tight.

D. Restrained Flange Adapter Joints:
   1. Use only when shown on PLANS or authorized by ENGINEER.
   2. Install in strict accordance with manufacturers printed instructions and as specified above.

E. Special Jointing Procedures:
   1. New Piping that Connects to Existing Piping:
      a. General: Any connection to existing piping will require, at a minimum, new gaskets and new nuts and bolts.
      b. Preparation:
         1) Excavate and expose piping for underground connections. Install temporary supports for aboveground piping.
         2) Inventory materials to verify that all fittings, gaskets, nuts, bolts, etc. are on hand to complete connection.
         3) Coordinate isolation operations in conjunction with plant or utility personnel. Do not close valves or stop equipment.
         4) Isolate and drain existing piping.
            a) If existing line is a wastewater line, direct drainage to sanitary sewer.
            b) If existing line is a water line, then direct drainage to nearest storm sewer or swale.
      c. Underground: Remove any thrust blocking that may exist after the pipe has been removed from service.
         1) Connection to Plug or Existing Fitting: Remove existing plug or fitting. Make new connection using mechanical joint or bell and spigot jointing procedure above, as applicable. Install thrust restraint as applicable.
         2) Connection to Pipe Barrel: Cut existing pipe using a guillotine saw, milling cutter, or abrasive saw. Square pipe ends and bevel pipe. Seal exposed metal with coal tar epoxy. Insert new fitting(s) as shown on plans. Complete connection using a solid sleeve, cutting-in sleeve, or other coupling approved by ENGINEER. Install thrust restraint as applicable.
      d. Above Ground:
         1) Connection to Existing Flange: Remove blind flange or existing fitting. Face existing flange to obtain a uniform sealing surface. Install new piping or fittings as shown on the PLANS using the flanged jointing procedure above with a new gasket and new nuts and bolts.
         2) Cut existing pipe using a guillotine saw, milling cutter, or abrasive saw. Square pipe ends and bevel pipe. Seal exposed

metal with coal tar epoxy. Insert new fittings as shown on PLANS and complete joint with a restrained flanged coupling adapter or a coupling with thrust restraint. Install piping support under new connection.

2. Pipe Connections at the Boundary Between Two Construction Contracts: Make connection per detail shown on PLANS.
3. Connections to Other Pipe Materials: Make connection using coupling approved by ENGINEER with appropriate transition gaskets.

3.03 UNDERGROUND INSTALLATION

A. General:
1. Lay pipe and fittings in conformance with manufacturer's instructions and alignment and elevations shown.
2. Provide all special tools and devices, such as special jacks, chokers, and similar items required for proper installation.
3. Use pipe joints lubricant as specified; no substitutions will be permitted.
4. Do not lay pipe in water or when, in the opinion of the ENGINEER, trench conditions are unsuitable.
5. Prevent uplift and floating of pipe prior to backfilling. Prevent foreign material from entering pipe at all times during placement.

B. Excavation and Preparation of Trench:
1. Geometry: Maximum width per detail on PLANS.
2. Brace trench and drain as necessary to accomplish work safely and efficiently as defined by CONTRACTOR's Trench Safety Plan.
3. Dewater trench as necessary by pumping, well pointing, or other means to keep trench clear of water. Deliver discharge from pumps to natural drainage ditches or to drains. Attain discharge permit if required at no additional cost to OWNER.
4. Grade trench bottom to line and grade to which pipe is to be laid, with proper allowance for pipe thickness and pipe base material.
5. Remove hard spots that would prevent a uniform thickness of base or uniform pressure on the pipe barrel.
6. Place pipe base material to proper grade for full width and length of trench. Minimum depth of pipe base below barrel of pipe to be as shown on Detail on PLANS.
7. Excavate bell holes at each joint to permit proper assembly and visual feeler gauge inspection of the entire joint.
8. If trench has been excavated below the required depth for pipe base placement without approval by ENGINEER, fill excess depth to proper subgrade with pipe base specified herein, at the CONTRACTOR's sole expense.

C. Alignment and Grade:
1. To Grade: As shown with joints centered and spigots home.
2. Not to Grade: Minimum depth of cover 36-inches under finished grade; 18-inches under flow lines of drainage ditches; depth of cover at other locations as shown on PLANS.
3. Correcting Faulty Grade: Correct any part of trench excavated below grade with approved, thoroughly compacted material.
4. Do not deviate more than 1 inch from line or ¼-inch from grade for gravity piping.
5. Measure for grade at the pipe invert, not at the top of the pipe.
6. Before laying each section of the pipe, check the grade with a straightedge and correct any irregularities found.

D. Pipe Handling and Laying:
1. Care: Load and unload by use of approved hoists, skids, or other approved means to avoid damage. Keep interior of pipe free of foreign matter.

2. Inspection: Before lowering pipe into trench, inspect pipe for defects. Replace defective joints, fittings, pipe, or coatings.
3. Apply 8-mil polyethylene encasement in accordance with AWWA C105 to all cast iron and ductile iron piping, including fittings and valves.
4. Laying:
    a. Lay pipe upgrade with bell ends facing direction of laying.
    b. After a section of pipe has been lowered into the prepared trench, clean the end of the pipe to be joined, the inside of the joint, and the rubber ring immediately before joining the pipe.
    c. Do not block under pipe.
    d. Do not lay pipe in water.
    e. Lay pipe only when impending weather conditions will not endanger quality of workmanship or materials.
    f. Check gasket position with feeler gauge furnished by the pipe manufacturer to assure proper seating. Use feeler gauge of proper size, type and shape during installation for each type of pipe furnished.
5. Close and block the open end of the last laid section of pipe to prevent entry of foreign material or creep of the gasketed joints, at all times when laying operations are not in progress, at the close of the day's work, or when the workers are absent from the job.
6. Deflection of Joints:
    a. PLANS indicate minor changes in slope and direction without corresponding fittings. Accommodate changes by deflecting joints. Standard bends may be required to conform to manufacturer's allowable deflection and the following requirements.
    b. Deflect pipe at joints for pipelines using unsymmetrical closure of spigot into bell.
    c. Maximum Deflection: 90 percent of maximum deflection recommended by pipe manufacturer for restrained joint pipe, 50 percent for all other joints.
    d. Conform to lines and grades on PLANS. Misalignment at point of intersection (PI) of up to 1 foot is allowable provide that line and grade is re-established within 60 feet of PI.
    e. Record deflections and/or standard fittings on As-Built drawings.
    f. Use one of the following methods if joint deflection of standard pipe lengths will not accommodate horizontal or vertical curves in alignment:
        1) Shorter pipe lengths.
        2) Standard bends.
7. After the joint has been made, check pipe for alignment and grade.
8. Valve Boxes and Valves: Set valves and boxes plumb and centered. Provide firm support by tamping selected material as directed. Set top of boxes at finished grade unless directed otherwise.

E. Backfill in the Pipe Zone (Unless Otherwise Noted on PLANS):
1. The pipe zone includes the full width of the excavated trench from the bottom of the trench to a level 12 inches above the top outside surface of the pipe barrel.
2. Deposit select backfill material in the trench simultaneously on both sides of pipe for the full width of trench in horizontal lifts not exceeding 8 inches uncompacted thickness.
    a. Work the material under the haunches of the pipe by slicing with a shovel.
    b. Moisten backfill and compact with tamping bars and/or mechanical compactors.
    c. Compact material at the sides of the pipe with vibratory plate compactors to 95 percent of the maximum density in accordance with ASTM D698.
    d. Do not operate the vibratory compactor over the top of the pipe until the full depth of the pipe zone material has been placed.

e. Do not use impact type compactors for compaction until at least 4 feet of backfill is placed over the pipe.

3. Ensure that firm support is obtained in the area of the pipe zone from the invert to the spring line of the pipe, to prevent any lateral movement of the pipe during final backfilling of the pipe zone.

F. Backfilling and Cleanup (Unless Otherwise Noted on PLANS):

1. Time of Backfilling: Backfill as soon as practicable after completion of laying and jointing of pipe.
2. Backfill Procedure Above Pipe Zone: As shown on PLANS.
3. Rock and Rock Fragment Exclusion: Allow no rock or rock fragment in backfill for at least 1 foot above top of pipe and allow no stone larger than 8 inches in its greatest dimension in backfill.
4. Deficiency of Backfill: Supply any deficiency in quantity of materials for backfilling trenches or for filling depressions caused by settlement.
5. Removal of Excess Material: Remove from site, or use at site for fill as shown or approved.

G. Marking Tapes:

1. Install along centerline of all pipe on top of last lift of pipe zone material.
2. Use care to prevent damage to tape; repair any damage incurred.

H. Buried Pipe in Concrete Encasements or Concrete Bedding:

1. Pipe Joints: Do not encase in concrete unless specifically shown.
2. Pipe Coatings: Continuous through concrete encasements, thrust blocks, anchors, collars, etc., unless otherwise shown.

3.04 ABOVEGROUND INSTALLATION

A. General:

1. Clean each piece of piping to remove dirt, grease and other foreign matter.
2. Start with piping at “cast-in” wall fittings and work toward equipment. If “block-outs” are shown on PLANS, grout the same with high strength, non-shrink grout after piping is installed and aligned.
3. Run lines parallel to building lines.
4. DO NOT spring or force pipe into place or weaken structural portions of the building or structure.
5. Support piping as shown on PLANS and as required to distribute loads to structures, hangers, piping specials, and equipment so that excess stresses do not occur. Set all hangers and supports before flange bolts are tightened.
6. Align hangers supporting adjacent piping with equal support spans where possible.
7. Bring individual runs of piping to true grade and alignment by means of erection bolts and drift pins without forcing.
8. Bolt holes on flanges are to straddle vertical centerline of pipe.
9. Align and make up piping before grouting equipment to assure accurate alignment, then disconnect piping during grouting.
10. After equipment is grouted and grout set, make up piping, making use of flexible joints provided for that purpose, or as otherwise shown. Correct alignment as necessary to prevent stresses in flexible joints. Refer to flexible coupling manufacturer’s instructions for permissible limits of alignment.
11. Valve Orientation:
    a. As shown where valve handwheels are shown.
    b. Where valve handwheels are not shown, orient to permit easy access to the valve operator, and to avoid interferences.
12. Pipe Tap Connections:
    a. Taps to the pipe barrel are unacceptable.

b. To Ductile Iron Piping: Connect only with service saddle or at a tapping boss of a fitting, valve body, or equipment casting.

B. Flexible Couplings, Flanged Coupling Adapters and Service Saddles
1. Thoroughly clean oil, scale, rust and dirt from the pipe to provide a clean seat for the gasket.
2. Wipe gaskets clean prior to installations.
3. Lubricate flexible couplings and flanged coupling adapter gaskets with soapy water or manufacturer's standard lubricant before installation on the pipe ends.
4. Install couplings, service saddles and anchor studs in accordance with manufacturer's instructions.
5. Tighten bolts progressively, drawing up bolts on opposite sides a little at a time until all bolts have a uniform tightness.
6. Use only torque-limiting wrenches to tighten bolts.

3.05 THRUST RESTRAINT

A. General:
1. Thrust restraint and ties for aboveground and underground piping is generally shown on the PLANS of the individual pipelines; however, their absence does not relieve the CONTRACTOR of the responsibility for providing them as required for a complete and operating system.
2. Provide thrust restraints to withstand test pressure specified.

B. Location:
1. At pipeline tees, plugs, caps, bends and other locations where unbalanced forces exist.
2. Provide thrust blocks and ties where required, whether or not shown.
3. Use thrust restraint for pressure pipelines at all bends, tees, points where reducers or changes in pipe diameter occur, fire hydrants or flushing valves, and all plugged openings. Provide restraint for an adequate length along pipeline on either side of a restrained joint to achieve a restrained system.

C. Thrust Ties: Install as detailed, or per joint restraint manufacturer's recommendations.

D. Restrained Joint Pipe and Fittings: Ductile iron restrained joint products are specified in Section 15062 "Ductile Iron Pipe and Cast Iron and Ductile Iron Fittings".

E. Concrete Thrust Blocking:
1. Use concrete having compressive strength not less than 1,500 pounds per square inch in each case.
2. Use all materials, including aggregate, cement, and water, and mix and place concrete in accordance with applicable concrete Specification Section.
3. Place blocking between undisturbed ground and the fitting to be anchored.
4. Place blocking so that pipe and fitting joints will be accessible for repair.
5. Size area of bearing on pipe and on ground in each instance as required for test pressure and bearing capacity of soil.
6. Provide concrete thrust blocking where shown on PLANS and as detailed on PLANS.

3.06 ENCASEMENT AND FOUNDATIONS

A. PLANS require encasement and fitting foundations at specific locations.

B. Encasement (Provide where shown on PLANS): Use 1,500 psi compressive strength concrete minimum. Provide minimum 6" encasement on all sides of pipe for pipes 16" and smaller. Provide 12" encasement on all sides of pipe greater than 16".

C. Fitting Foundations:

1. Provide where shown on PLANS and at all vertical bends when the adjoining vertically oriented pipe extends more than 6 feet above finished grade.
2. Concrete for fitting foundations shall have a minimum compressive strength of 4000 psi after 28 days.
3. Provide bottom mat of #5 rebar, 9” on center each way, located 3” off bottom of concrete foundations.
4. Pipes 24” and less: Provide foundation that is 24” wider than pipe (12” on each side) and 12” in depth as measured from the bottom of the pipe.
5. Pipes greater than 24”: Provide foundation that is 48” wider than pipe (24” on each side) and 24” in depth as measured from the bottom of the pipe.
6. Cradle the bottom 30 degrees of the pipe with the foundation. Isolate pipe from foundation with a layer of 30 pound roofing felt.
7. If foundation conflicts with other facilities, adjust shape accordingly to maintain 4” clearance.

3.07 REPAIR/RESTORATION

A. Restoration: Replace walks, drives, shrubbery, trees, fences, sod, and any like obstructions removed or disturbed, where such are to be retained as a part or feature of a completed project.

3.08 FIELD QUALITY CONTROL

A. General:
1. Hydrostatically test all piping systems installed at the test pressures shown on PLANS or specified elsewhere in the TECHNICAL SPECIFICATIONS.
2. All tests are to be witnessed and acceptable to the ENGINEER.
3. Test lines laid under structures or pavement prior to such construction.

B. Field-test all piping in accordance with CONTRACT DOCUMENTS.

C. Repairs: Repair leaks and retest repaired sections at no additional cost to OWNER, including damage due to testing.

D. Placing in Service: Prior to placing piping in service, disconnect the piping from all equipment and flush all construction debris from the system.

3.09 CLEANING

A. Following assembly and testing, and prior to disinfection and final acceptance, flush pipelines with water to remove accumulated construction debris and other foreign matter.

B. Flush until all foreign matter is removed from the pipeline.

C. Provide hoses, temporary pipes, ditches and other items as required to properly dispose of flushing water without damage to adjacent properties.

D. Minimum Flushing Velocity: 2.5 fps.

E. For large diameter pipe where it is impractical to flush the pipe at 2.5 fps velocity, clean the pipeline in-place from the inside by brushing and sweeping, then flush the line at a lower velocity.

3.10 SCHEDULES (NOT USED)

3.11 MEASUREMENT AND PAYMENT

No separate measurement or payment for work performed under this Section. Include cost of same in Contract price bid for work of which this is a component part.

END OF SECTION

THIS PAGE IS LEFT BLANK INTENTIONALLY

SECTION 15075

MECHANICAL IDENTIFICATION

PART 1 GENERAL

1.01 SUMMARY

A. Furnish, mark, and install identification devices for all mechanical equipment, ducts, exposed piping, and valves using color bands, lettering, flow direction arrows, and related permanent identification devices, as specified herein. Mark existing equipment, ducts, piping, and valves when indicated on PLANS.

1.02 RELATED REQUIREMENTS

A. Other related work as called for on PLANS or specified elsewhere in this or other TECHNICAL SPECIFICATION Sections.

1.03 REFERENCES

The publications listed below form a part of this specification to the extent referenced. The publications are referenced in the text by basic designation only.

AMERICAN NATIONAL STANDARD INSTITUTE (ANSI)

ANSI A13.1	Scheme for the Identification of Piping Systems.

AMERICAN SOCIETY FOR TESTING AND MATERIALS (ASTM)

ASTM D709	Standard Specification for Laminated Thermosetting Materials

1.04 DEFINITIONS (NOT USED)

1.05 SYSTEM DESCRIPTION

A. Types of identification devices specified in this Section include the following:
1. Equipment Nameplates
2. Painted Identification Materials.
3. Plastic Pipe Markers.
4. Plastic Tape.
5. Valve Tags.
6. Valve Schedule Frames.
7. Engraved Plastic-Laminate Signs.
8. Plasticized Tags.
9. Special Items.
10. Underground Warning Tape

1.06 SUBMITTALS

A. Furnish the following in accordance with Specification Section 01300, “Submittals” and Section 01730, “Operation and Maintenance Data”.
1. In addition to the items specified in Section 01300 “Submittals”, furnish the following information:
   a. Product data: Manufacturer’s technical data and installation instructions for each identification material and device required.
   b. Samples: Of all types and of each color, lettering style and other graphic representation required for each identification material or system to be used in the work.
   c. A list of suggested wording for all valve tags prior to fabrication.

1.07 QUALITY ASSURANCE

A. Regulatory requirements:
   1. Comply with Texas Commission on Environmental Quality (TCEQ):
      a. Chapter 217 – Design Criteria for Wastewater Systems
      b. Chapter 290 - Public Drinking Water.
   2. Comply with ANSI A13.1 for lettering size, length of color field, colors, and viewing angles of identification devices.

1.08 DELIVERY, STORAGE AND HANDLING

A. Delivery products to site in factory packed boxes or crates.

B. Store inside. Protect from weather and damage until installed.

1.09 – 1.11 (NOT USED)

PART 2 PRODUCTS

2.01 MANUFACTURERS

A. Manufacturer: Subject to compliance with the requirements of this Section, provide mechanical identification materials from one of the following manufacturers.
   1. Allen Systems, Inc.
   2. Brady (W.H.) Co.; Signmark Div.
   3. Industrial Safety Supply Co., Inc.
   4. Seton Name Plate Corp.

2.02 MATERIALS AND/OR EQUIPMENT

A. General: Provide manufacturer's standard products of categories and types required for each application. Where more than single type is specified for application, selection is installer's option, but provide single selection for each product category.

B. Equipment Nameplates
   1. Material and fabrication:
      a. Stainless steel sheet engraved or stamped with text, holes drilled, or punch for fasteners.
   2. Fasteners:
      a. Number 4 or larger oval head stainless steel screws or drive pins.
   3. Text:
      a. Manufacturer's name, equipment model number and serial number, identification tag number; and when appropriate, drive speed, motor horsepower with rated capacity, pump rated total dynamic head, and impeller size.

C. Painted Identification Materials:
   1. Stencils: Standard metal stencils, prepared for required applications with letter sizes generally complying with recommendations of ANSI A13.1 for piping and similar applications, but not less than 1¼″ high letters for ductwork and not less than 3/4″ high letters for access door signs and similar operational instructions.
   2. Stencil Paint: Standard exterior type stenciling enamel; black, except as otherwise indicated; either brushing grade or pressurized spray-can form and grade.
   3. Identification Paint: Standard identification enamel of colors indicated or, if not otherwise indicated for piping systems, comply with ANSI A13.1 for colors.

D. Plastic Pipe Markers:
   1. Snap-On Type: Provide manufacturer's standard pre-printed, semi-rigid snap-on, color-coded pipe markers, complying with ANSI A13.1.

2. Pressure-Sensitive Type: Provide manufacturer's standard pre-printed, permanent adhesive, color-coded, pressure-sensitive vinyl pipe markers, complying with ANSI A13.1.
3. Insulation: Furnish 1″ thick molded fiberglass insulation with jacket for each plastic pipe marker to be installed on non-insulated pipes subjected to fluid temperatures of 125°F (52°C) or greater. Cut length to extend 2″ beyond each end of plastic pipe marker.
4. Small Pipes: For external diameters less than 6″ (including insulation if any), provide full-band pipe markers, extending 360 degrees around pipe at each location, fastened by one of the following methods:
   a. Snap-on application of pre-tensioned semi-rigid plastic pipe marker.
   b. Adhesive lap joint in pipe marker overlap.
   c. Laminated or bonded application of pipe marker to pipe (or insulation).
   d. Taped to pipe (or insulation) with color-coded plastic adhesive tape, not less than 3/4″ wide; full circle at both ends of pipe marker, tape lapped 1½″.
5. Large Pipes: For external diameters of 6″ and larger (including insulation if any), provide either full-band or strip-type pipe markers, but not narrower than 3 times letter height (and of required length), fastened by one of the following methods:
   a. Laminated or bonded application of pipe marker to pipe (or insulation).
   b. Taped to pipe (or insulation) with color-coded plastic adhesive tape, not less than 1½″ wide; full circle at both ends of pipe marker, tape lapped 3″.
   c. Strapped-to-pipe (or insulation) application of semi-rigid type, with manufacturer's standard stainless steel bands.
6. Lettering: Comply with piping system nomenclature as specified, scheduled or shown, and abbreviate only as necessary for each application length.
   a. Arrows: Print each pipe marker with arrows indicating direction of flow, either integrally with piping system service lettering (to accommodate both directions), or as a separate unit of plastic.

E. Plastic Tape:
1. General: Provide manufacturer's standard color-coded pressure-sensitive (self-adhesive) vinyl tape, not less than 3 mils thick.
2. Width: Provide 1½″ wide tape markers on pipes with outside diameters (including insulation, if any) of less than 6″, 2½″ wide tape for larger pipes.
3. Color: Comply with ANSI A13.1, except where another color selection is indicated.

F. Valve Tags:
1. Provide 2″ diameter, 0.025″ thick, polished stainless steel valve tags with 3/16″ hole for mounting.
2. Marking:
   a. Scheduled Valves: Tags are to be stamped or engraved with the tag number listed in the valve schedule:
      1) First Line: Area code.
      2) Second Line: Equipment code.
      3) Third Line: Unit code.
      4) Lettering Height: 1/8″.
   b. Unscheduled Valves: Tags are to describe the service with a sequential number:
      1) First Line: Service - 1/4″ high lettering.
      2) Second Line: Sequential number - 1/2″ high lettering.
   c. Fill tag engraving with black enamel.

3. Valve Tag Fasteners:
   a. Stainless steel screws;
   b. Stainless steel nuts and bolts;
   c. Stainless steel wire (1/16″) with swagged terminations;
   d. No. 6 stainless steel beaded chain; or
   e. No. 16 stainless steel jack chain.
4. Access Panel Markers: Provide manufacturer's standard 1/16″ thick engraved plastic laminate access panel markers, with abbreviations, and numbers corresponding to concealed valve, unless otherwise required by code. Include 1/8″ center hole to allow attachment.

G. Valve Schedule Frames:
1. General: For each page of valve schedule, provide glazed display frame, with screws for removable mounting on masonry walls. Provide frames of finished hardwood or extruded aluminum, with SSB-grade sheet glass.

H. Engraved Plastic-Laminate Signs:
1. General: Provide engraving stock melamine plastic laminate, complying with ASTM D709, in the sizes and thicknesses indicated, engraved with engraver's standard letter style of the sizes and wording indicated, black with white core (letter color) except as otherwise indicated, punched for mechanical fastening except where adhesive mounting is necessary because of substrate.
2. Thickness: 1/16″ for units up to 20 sq.in. or 8″ length; 1/8″ for larger units.
3. Fasteners: Self-tapping stainless steel screws, except contact-type permanent adhesive where screws cannot or should not penetrate the substrate.

I. Plastic Equipment Markers:
1. General: Provide manufacturer's standard laminated plastic, color-coded equipment markers. Conform to the following color code.
   a. Green: Cooling equipment and components.
   b. Yellow: Heating equipment and components.
   c. Yellow/Green: Combination cooling and heating equipment and components.
   d. Brown: Energy reclamation equipment and components.
   e. Blue: Equipment and components that do not meet any of the above criteria.
   f. For hazardous equipment, use colors and designs recommended by ANSI A13.1.
2. Nomenclature: Include the following, matching terminology on schedules as closely as possible.
   a. Name and plan number.
   b. Equipment service.
   c. Design capacity.
   d. Other design parameters such as pressure drop, entering and leaving conditions, rpm, etc.
3. Size: Provide approximate 2½″ × 4″ markers for control devices, dampers and valves; and 4½″ × 6″ for equipment.

J. Lettering and Graphics:
1. General: Coordinate names, abbreviations and other designations used in mechanical identification work, with corresponding designations shown, specified or scheduled. Provide numbers, lettering and wording as indicated or, if not otherwise indicated, as recommended by manufacturers or as required for proper identification and operation/maintenance of mechanical systems and equipment.
   a. Multiple Systems: Where multiple systems of same generic name are shown and specified, provide identification which indicates individual system number as well as service (e.g., Boiler No. 3, Air Supply No. 1H, Standpipe F12).

K. Special Items

1. In addition, special coating of following items will be required:

Item	Color
Hoist hooks and blocks	Yellow and black stripes
Steel guard posts	In accordance with standard details

L. Underground Warning Tape

1. Material:

a. Metallic detection tape; minimum 4 mil thick by 6 inches wide polyethylene film with wording, “Caution” with name of service followed by words, “Line Buried Below” repeated continuously along tape length, with alternate metallic and color strips.

2.03 EXTRA STOCK

A. Furnish minimum of 5% extra stock of each mechanical identification material required, including additional numbered valve tags (not less than 3) for each piping system, additional piping system identification markers, and additional plastic laminate engraving blanks of assorted sizes.

1. Where stenciled markers are provided, clean and retain stencils after completion of stenciling and include used stencils in extra stock, along with required stock of stenciling paints and applicators.

PART 3 EXECUTION

3.01 GENERAL

A. Install all labels and identification tags in accordance with the manufacturer’s printed instructions. Appearance to be neat and uniform. Tags and/or labels to be readily visible from normal working locations.

B. Coordination: Where identification is to be applied to surfaces which require insulation, painting or other covering or finish, including valve tags in finished mechanical spaces, install identification after completion of covering and painting. Install identification prior to installation of acoustical ceilings and similar removable concealment.

3.02 PREPARATION

A. Prepare and coat surfaces as Specified in Contract documents.

B. Prepare surface in accordance with product manufacturer's instructions.

3.03 ERECTION/INSTALLATION/APPLICATION AND/OR CONSTRUCTION

A. Existing Identification Systems: In installations where existing piping identification systems have been established, continue to use the existing system. Where existing identification systems are incomplete, utilize the existing system as far as practical and supplement with the specified system. The objective is to fully identify all new equipment, piping, valves, and appurtenances to the level specified herein.

B. Piping System Identification:

1. General: Pipe identification to consist of 4 elements - 2 color-coded bands, a lettered label, and a flow arrow to indicate direction of flow in the pipe. Color bands to be painted directly upon the pipe or of the pressure-sensitive, adhesive-backed, vinyl cloth or plastic tape type. Labels to be preprinted on pressure-sensitive, adhesive-backed, vinyl cloth or plastic tape. Arrows to be die-cut of the same type of material as the labels. Arrange bands so that the lettered label and the directional arrow are placed between the 2 bands. Install pipe markers of

one of the following types on each system indicated to receive identification, and include arrows to show normal direction of flow.

a. Stenciled markers, including color-coded background band or rectangle, and contrasting lettering of black or white. Extend color band or rectangle 2″ beyond ends of lettering.

b. Letter sizes and colors for lettering, arrows, and background to conform to ANSI A13.1.

c. Plastic pipe markers, with application system as indicated under "Materials" in this Section. Install on pipe insulation segment where required for hot non-insulated pipes.

d. Stenciled markers, black or white for best contrast, wherever continuous color-coded painting of piping is provided.

2. Locate pipe markers and color bands as follows wherever piping is exposed to view in occupied spaces, machine rooms, accessible maintenance spaces (shafts, tunnels, plenums) and exterior non-concealed locations.

a. Near each valve and control device.

b. Near each branch, excluding short take-offs for fixtures and terminal units; mark each pipe at branch, where there could be question of flow pattern.

c. Near locations where pipes pass through walls or floors/ceilings, or enter non-accessible enclosures.

d. At access doors, manholes and similar access points which permit view of concealed piping.

e. Near major equipment items and other points of origination and termination.

f. Piping to be identified at intervals of 20 feet, and at least one time in each room. Identify piping at a point approximately within 2 feet of all turns, ells, valves, and on the upstream side of all distribution fittings or branches. Sections of pipe that are too short to be identified with color bands, lettered labels, and directional arrows are to be tagged and identified similar to valves.

g. On piping above removable acoustical ceilings, except omit intermediately spaced markers.

3. Sections of pipe that are too short to be identified with color bands, lettered labels, and arrows are to be identified with metal or plastic tags as specified herein.

C. Valve Identification:

1. General: Provide valve tag on every valve, cock and control device in each piping system; exclude valves within factory-fabricated equipment units, plumbing fixture faucets, convenience and lawn-watering hose bibs, and shut-off valves at plumbing fixtures, HVAC terminal devices and similar rough-in connections of end-use fixtures and units. List each tagged valve in valve schedule for each piping system.

2. Valve tags are to be permanently attached to the valve as follows:

a. Valves 12-inches and Smaller: Attach tag to valve with SS beaded chain, SS jack chain, or SS wire.

b. Valves Larger than 12-inches: Attach tag to valve using SS screw(s) or SS nuts and bolts.

3. Mount valve schedule frames and schedules in rooms where indicated or, if not otherwise indicated, where directed by ENGINEER.

a. Where more than one major machine room is shown for project, install mounted valve schedule in each major machine room, and repeat only main valves which are to be operated in conjunction with operations of more than single machine room.

D. Equipment Identification:

1. General: Install engraved plastic laminate sign or plastic equipment marker on or near each major item of mechanical equipment and each operational device, as

specified herein if not otherwise specified for each item or device. Provide signs for the following general categories of equipment and operational devices:

a. Main control and operating valves, including safety devices and hazardous units such as gas outlets.
b. Meters, gages, thermometers and similar units.
c. Fuel-burning units including boilers, furnaces, heaters, stills and absorption units.
d. Pumps, compressors, chillers, condensers and similar motor-driven units.
e. Heat exchangers, coils, evaporators, cooling towers, heat recovery units and similar equipment.
f. Fans, blowers, primary balancing dampers and mixing boxes.
g. Packaged HVAC central-station or zone-type units.
h. Tanks and pressure vessels.
i. Strainers, filters, humidifiers, water treatment systems and similar equipment.

2. Optional Sign Types: Where lettering larger than 1″ height is needed for proper identification, because of distance from normal location of required identification, stenciled signs may be provided in lieu of engraved plastic, at installer's option.
3. Lettering Size: Minimum 1/4″ high lettering for name of unit where viewing distance is less than 2′-0″, 2″ high for distances up to 6′-0″, and proportionately larger lettering for greater distances. Provide secondary lettering of 2/3 to 3/4 of size of the principal lettering.
4. Text of Signs: In addition to name of identified unit, provide lettering to distinguish between multiple units, inform operator of operational requirements, indicate safety and emergency precautions, and warn of hazards and improper operations.
   a. Operational valves and similar minor equipment items located in non-occupied spaces (including machine rooms) may, at installer's option, be identified by installation of plasticized tags in lieu of engraved plastic signs.

3.04 – 3.05 (NOT USED)

3.06 ADJUSTING

A. Relocate any mechanical identification device which has become visually blocked by work of other divisions.

3.07 CLEANING

A. Clean face of identification devices, and glass frames of valve charts.

3.08 - 3.10 (NOT USED)

3.11 MEASUREMENT AND PARMENT

No separate measurement or payment for work performed under this Section. Include cost of same in Contract price bid for work of which this is a component part.

END OF SECTION

THIS PAGE IS LEFT BLANK INTENTIONALLY

SECTION 15100

VALVES

PART 1 – GENERAL

1.01 SUMMARY

Furnish and install valves, actuators, and all related accessories and appurtenances so as to provide a complete functioning system at each valve location as shown on PLANS and as specified. This Section includes basic requirements for valves.

1.02 RELATED REQUIREMENTS

A. PLANS indicate sizes, working pressures, type operator, and operating conditions for sizing operators.

B. Other related work as called for on PLANS or specified in this or other TECHNICAL SPECIFICATION sections.

1.03 REFERENCES

The publications listed below form a part of this specification to the extent referenced. The publications are referred to in the text by basic designation only.

AMERICAN NATIONAL STANDARDS INSTITUTE (ANSI)

ANSI B16.1	Cast Iron Pipe Flanges and Flanged Fittings

AMERICAN SOCIETY FOR TESTING AND MATERIALS (ASTM)

ASTM A126	Standard Specification for Gray Iron Castings for Valves, Flanges, and Pipe Fittings
ASTM A167	Standard Specification for Stainless and Heat-Resisting Chromium-Nickel Steel Plat, Sheet, and Strip
ASTM A276	Standard Specification for Stainless Steel Bars and Shapes
ASTM A351	Standard Specification for Castings Austenitic, Austenitic-Ferritic (Duplex), for Pressure Containing Parts
ASTM A536	Standard Specification for Ductile Iron Castings
ASTM A582	Standard Specification for Free-Machining Stainless Steel Bars
ASTM D429	Standard Test Methods for Rubber Property - Adhesion to Rigid Substrates
ASTM D1784	Standard Specification for Rigid Poly(Vinyl Chloride) (PVC) Compounds and Chlorinated Poly(Vinyl Chloride) (CPVC) Compounds
ASTM D2000	Standard Classification System for Rubber Products in Automotive Applications

AMERICAN WATER WORKS ASSOCIATION (AWWA)

AWWA C111/A21.11	Standard Specification for Gray Cast Iron Casting for Valves, Flanges, and Pipe Fittings
AWWA C500	Metal-Seated Gate Valves for Water Supply Service
AWWA C504	Rubber-Seated Butterfly Valves
AWWA C508	Swing-Check Valves for Waterworks Service
AWWA C509	Resilient-Seated Gate Valves for Water Supply Service
AWWA C511	Reduced-Pressure Principle Backflow-Prevention Assembly
AWWA C540	Power-Actuating Devices for Valves and Sluice Gates
AWWA C550	Protective Epoxy Interior Coatings for Valves and Hydrants
AWWA C606	Grooved and Shouldered Joints

AMERICAN SOCIETY OF SANITARY ENGINEERS (ASSE)

ASSE Standard 1011	Performance Requirements for Hose Connection Vacuum Breakers

NATIONAL SCIENCE FOUNDATION

NSF 61	Drinking Water System Components – Health Effects

1.04 DEFINITIONS (NOT USED)

1.05 DESIGN AND PERFORMANCE CRITERIA

A. Pressure rating:
   1. Suitable for service under minimum working pressures of 150 pounds per square inch gauge.
   2. When a piping system is specified in the Piping Schedule to be tested at a pressure greater than 150 pounds per square inch gauge, provide valves for that piping system with design working pressure which is sufficient to withstand the test pressure.

B. Valve to piping connections. Unless otherwise specified on PLANS provide as follows:
   1. Valves 3 inch nominal size and larger: Flanged ends, except underground valves.
   2. Valves less than 3 inch nominal size: Threaded ends.
   3. Plastic valves in plastic piping:
      a. Up to 2.5 inches: Provide solvent or heat welded unions.
      b. 3 inches and above: Provide solvent or heat welded flanges.

1.06 SUBMITTALS

A. Furnish in accordance with Specifications Section 01300, “Submittals” and Section 01730, “Operation and Maintenance Data”.
   1. Shop Drawings. In addition to the items specified in Section 01300, “Submittals”, furnish the following:
      a. Product data sheets for make and model, including valve type, size, pressure rating, and Cv Factor.

b. Complete catalog information, descriptive literature, specifications, and identification of materials of construction.
c. Certified drawing with description of component parts, dimensions, weights, coatings, and materials of construction
d. Power and control wiring diagrams, including terminals and numbers.
e. Complete motor nameplate data.
f. Sizing calculations for open-close/throttle and modulating.

2. Operation and Maintenance Manuals:
   a. Furnish installation, operation, and maintenance instructions for each type of manual valve 4-inch in nominal size and larger, and all non-manual valves. Include information on valve operators in operation and maintenance instruction manual.
3. Certifications:
   a. Certificate of Compliance for:
      1) Electric operators; full compliance with AWWA C540.
      2) Butterfly valves; full compliance with AWWA C504.
      3) NSF 61 for valves and coatings used in potable water applications.
   b. Tests and inspection data.
   c. Manufacturer's Certificate of Proper Installation.

B. The City of Austin Water and Wastewater Utility Standard Products Lists (SPL) are considered to form a part of these Specifications. Contractors may, when appropriate, elect to use products from the SPL; however, submittal to the Engineer/Architect (E/A) is still required. If the Contractor elects to use any materials from these lists, each product shall be completely and clearly identified by its corresponding SPL number when making the product submittal. This will expedite the review process in which the E/A, and, if necessary, the Water and Wastewater Utility Standard Products Committee, decide whether the products meet the Contract requirements and the specific use foreseen by the E/A in the design of this engineered Project. The SPL's should not be interpreted as being a pre-approved list of products necessarily meeting the requirements for a given construction Project. Items contained in the SPL cannot be substituted for items shown on the Drawings, or called for in the specifications, or specified in the Bidding Requirements, Contract Forms and Conditions of Contract, unless approved by the E/A in conjunction with the Water and Wastewater Utility Standard Products Committee. The Standard Product List current at the time of plan approval will govern.

1.07 QUALITY ASSURANCE

A. Standardization: All like equipment to be obtained from single manufacturer.

B. System Coordination: CONTRACTOR is responsible for all details necessary to properly install, adjust, and place in operation working systems.

C. All electric valve actuators shall be manufactured by the same manufacturer. CONTRACTOR shall coordinate among all suppliers of various equipment to ensure consistency within the construction contract. However, unit responsibility shall be maintained for each individual valve and gate including coordination of design, assembly, testing, and installation.

1.08 DELIVERY, STORAGE, AND HANDLING

A. Deliver, unload and store products on site in manner that prevents damage. Use special care to prevent damage from temperature and condensation.

B. Flanges to be protected by wooden blank flange protectors, strongly built and securely bolted thereto, or otherwise attached.

C. Storage and Protection:
   1. Store materials in original, unopened containers in compliance with manufacturer's printed instructions.
   2. Keep materials dry until ready for use. Keep packages of material off the ground, under cover, and away from sweating walls and other damp surfaces.
   3. Protect finished surfaces from soiling and damage during handling and installation. Keep covered with a protective covering.

1.09 - 1.11 (NOT USED)

PART 2 - PRODUCTS

2.01 GENERAL

A. Valve to include operator, actuator, hand wheel, chain wheel, extension stem, floor stand, worm and gear operator, operating nut, chain, wrench, and accessories for a complete operation. Provide electric actuators as noted on the PLANS

B. Valve to be suitable for intended service. Renewable parts not to be of a lower quality than specified and designed for long term operation in severe duty environment.

C. Valve same size as adjoining pipe.

D. Valve ends to suit adjacent piping.

E. Size operator to operate valve for the full range of working pressures indicated on applicable schedules.

F. Valve to open by turning counterclockwise.

G. All accessory items such as positioners, actuators, small diameter piping and tubing, limit switches shown, specified or required shall be factory mounted on the indicated valve and adjusted at the valve manufacturer's facility.

2.02 MATERIALS

A. General
   1. Stainless steel: In accordance with ASTM A 167, Type 316, or Type 304, UNS Alloy S31600 or S30400.
   2. Valve and operator bolts and nuts: Unless otherwise specified on PLANS provide as follows:
      a. Fabricated of stainless steel for the following installation conditions:
         1) Submerged in sewage or water.
         2) In an enclosed space above sewage or water.
         3) In structures containing sewage or water, below top of walls.
         4) At openings in concrete or metal decks.
      b. Where dissimilar metals are being bolted, use stainless steel bolts with isolation bushings and washers.
      c. Underground bolts: Low-alloy steel in accordance with AWWA C111/A21.11.
   3. Bronze and brass alloys: Use bronze and brass alloys with not more than 6 percent zinc and not more than 2 percent aluminum in the manufacture of valve parts; UNS Alloy C83600 or C92200 unless specified otherwise.
   4. Valve bodies: Cast iron in accordance with ASTM A126, Class 30 minimum or ductile iron in accordance with ASTM A536, Grade 65-45-12 minimum unless specified otherwise.

B. Interior Protective Liner
   1. Provide valves with type of protective lining specified in the particular valve Specification.
   2. Apply protective lining to interior, non-working surfaces, except stainless steel surfaces.
   3. Lining types:
      a. Fusion bonded epoxy:
         1) Manufacturers: The following or equal:
            a) 3-M Company, ScotchKote 134; certified to NSF 61 for drinking water use.
         2) Fusion bonded, electrostatically applied epoxy per AWWA C550.
         3) Clean surfaces in accordance with SSPC SP 7 or SP10, as recommended by epoxy manufacturer.
         4) Apply in accordance with manufacturer's published instructions.
         5) Lining thickness: 0.010 to 0.012 inches except that:
            a) Lining thickness in grooves for gaskets: 0.005 inches.
            b) Do not coat seat grooves in valves with bonded seat.
         6) Quality control:
            a) Lining thickness: Measured with a non-destructive magnetic type thickness gauge.
            b) Verify lining integrity with a wet sponge-testing unit operating at approximately 60 volts, or as recommended by the lining manufacturer.
            c) Consider tests successful when lining thickness meets specified requirements and when no pinholes are found.
            d) Correct defective lining disclosed by unsuccessful tests, and repeat test.
            e) Repair pinholes with liquid epoxy recommended by manufacturer of the epoxy used for lining.
      b. High solids epoxy: As specified in Section 09902.

C. Underground Valves
   1. Provide underground valves with flanged, mechanical, or other type of joint required for the type of pipe to which the valve is to be connected.
   2. Coating and wrapping:
      a. Prior to installation, coat buried valves with protective coating as specified in Section 09902, "Painting and Protective Coatings".
      b. After installation, encase valves in 2 layers of polyethylene wrap in accordance with contract specifications for ductile iron piping.
         1) Polyethylene wrapping shall not affect operation of valve.

D. Manual Operators:
   1. General:
      a. Operator force not to exceed 40 pounds under any operating conditions, including initial breakaway. Provide gear reduction operator when force exceeds 40 pounds.
      b. Operator self-locking type or equipped with self-locking device.
      c. Position indicator on quarter-turn valves.
      d. Worm and gear operators: one-piece design worm-gears of gear bronze material. Worm hardened alloy steel with thread ground and polished.
      e. Traveling nut type operators threaded steel reach rods with internally threaded bronze or ductile iron nut. Capable of requiring maximum 100 foot-pounds of torque when operating valve under most adverse condition; limit stops on input shaft of manual operators for fully open and closed positions; non-moving vertical axis of operating nut when opening or closing valve.
      f. Provisions for alternate operation: Where specified or indicated on the Drawings, position and equip crank or handwheel operated geared valve

operators or lifts for alternate operation with tripod mounted portable gate operators.

g. Operation: Counterclockwise to open with suitable and adequate stops, capable of resisting at least twice normal operating force to prevent overrun of valve in open or closed position.

h. Open direction indicator: Cast arrow and legend indicating direction to rotate operator on handwheel, chain wheel rim, crank, or other prominent place.

2. Exposed operator:

a. Galvanized and painted handwheels, minimum 24 inch diameter

b. Lever operators allowed on quarter-turn valves 8-inch and smaller, requiring maximum 25 pounds pull to operate valve

c. Cranks on gear type operators, 15 inch radius.

d. Chain wheel operator with tiebacks, extension stem, floor stands, and other accessories to permit operation from normal operation level.

e. Valve handles to take a padlock, and wheels a chain and padlock.

E. Buried operator:

1. Buried operator housing: Oil and watertight, specifically designed for buried service, factory packed with suitable grease, completely enclosed space between operator housing and valve body so that no moving parts are exposed to soil.

2. Buried service operators on valves larger than 2½-inch shall have a 2-inch AWWA operating nut. Buried operators on valves 2½-inch and smaller shall have cross handle for operation by forked key.

3. Design buried service operators for quarter-turn valves to withstand 450 foot-pounds of input torque at the FULLY OPEN or FULLY CLOSED positions, grease packed and gasketed to withstand a submersion in water to 10 psi.

4. Buried valves shall have extension stems, bonnets, and valve boxes.

F. Electric Valve and Gate Operators

1. General:

a. Unless otherwise specified, operators shall be sized to move valves from full open to closed position at minimum 12 inches per minute, plus or minus 10 percent, under maximum operating load.

b. Actuator: Provide with built-in device to allow motor to reach full speed before engaging valve load; in manual operating mode when motor is not energized; in electrical operating mode when motor is energized.

c. Handwheels for manual operation: Metallic with arrows to indicate "OPEN" rotation; incapable of rotation during motor operation; unaffected by fused motor; maximum 80 pound pull on rim when rotating.

d. Declutch lever: Padlockable, capable of mechanically disengaging motor and related gearing positively when motor is deenergized and freeing handwheel for manual operation.

e. Unless otherwise specified, provide units consisting of 480-volt, three-phase electric motor, gearbox, limit switches, torque switches, manual override handwheel with declutching lever, and mechanical position indicator.

f. Provide Quarter turn or multi-turn units equipped with gearing and mounting hardware as required by the associated valve.

g. Sized by the valve supplier and factory mounted. Sized to produce at least 1½ times the operating torque required. Stall torque of motor shall not exceed the torque capacity of the valve.

h. The actuator motor and all electrical enclosures shall be NEMA 4, as a minimum. A separately sealed terminal compartment shall be provided to segregate the electronic and electrical components in the actuator from the incoming conduit.

i. Manufacturers (Reference single manufacturer requirement in Paragraph 1.07):
   1) Limitorque
   2) EIM
   3) Rotork
   4) no equal

2. Actuator gearing:
   a. All gearing shall be of metal construction. The actuator shall be a single or double reduction unit consisting of spur or helical gears and worm-gearing. The spur or helical gears to be of hardened alloy steel and the worm-gear to be alloy bronze. All gearing shall be accurately cut with hobbing machines. Final output reduction worm gearing shall conform to the requirements of AWWA C540. Actuator output speed changes to be mechanically possible by simply removing the motor and changing the exposed or helical gear set ratio without further disassembly of the electric actuator.
   b. Ball or roller bearings to be used throughout.
   c. Actuators shall be oil or grease lubricated. Permanently lubricated devices are not acceptable. Lubrication shall be suitable for installation at any angle and in ambient temperatures of minus 20°F to plus 140°F.
   d. The drive shall include a lost motion device with hammer blow effect to allow the motor to reach full speed before engaging the valve load.
   e. Dry contact limit switches (gear limit switches, torque switches, or any and all other position switches) shall be rated minimum 2-amp at 120V AC. Provide the minimum number of dry contact limit switches called for on the control schematic shown on the PLANS. The state/development of each contact, throughout the travel limits of the valve, shall be as called for and/or demonstrated on the control schematic shown on the PLANS.
   f. Actuators shall be equipped with automatic double-acting torque switches. Torque switches shall operate during the complete valve cycle to protect the valve and actuator from excessive loads caused by obstructions in either direction of travel.
   g. Actuators shall be equipped with handwheels for manual operation and shall include an automatic clutch to positively disengage the handwheel at any time the drive motor control is energized. Handwheel operator shall be designed in such a way that failure of the motorized gearing shall not prevent hand operation of the valves.
   h. Actuators shall include a mechanical indicator that will provide continuous visual indication of valve position.

3. Motors:
   a. Motors shall be specifically designed for valve actuator service and shall be rated for high starting torque, low-starting current, full voltage starting, totally enclosed, non-ventilated construction.
   b. Motor is to be rated for continuous duty operation. When requirements of the individual valve specifications do not allow a continuous duty motor, provide a motor capable of a minimum of 1200 starts per hour. Fifteen minute duty cycle motors are not acceptable.
   c. Motor insulation for 480V motors shall be NEMA Class F, as a minimum at 50 degree F ambient temperature.
   d. With a line voltage ranging between 10 percent above to 10 percent below the rated voltage, the motor to develop full rated torque continuously without causing the thermal contact protective devices imbedded in the motor windings to trip or the starter overloads to drop-out.
   e. All bearings to be of the ball type and thrust bearings to be provided where necessary. All bearings shall be provided with suitable seals to confine the lubricant and prevent the entrance of dirt and dust.

f. Motor conduit connections to be watertight and rated for temporary submergence. Motor construction shall incorporate the use of stator and rotor as independent components from the valve or operation such that the failure of either item does not require actuator disassembly or gearing replacement.

g. Modulating valves are required for some applications. Provide motor that is rated for modulation duty for up to 1200 starts per hour.

4. Controls:

a. General Description: Unless noted otherwise on PLANS (refer to following paragraph), full voltage reversing starter, overloads, circuit breakers, control power transformers, pilot devices, terminal blocks, valve positioner, pilot lights, pilot devices, selector switches, pushbuttons, related interconnect wiring, etc., shall be an integral part of the actuator assembly and shall be provided with the actuator. Control voltage shall be 120-volt AC.

b. Some PLANS may show actuators where the starter, overloads, feeder breaker assembly, pilot lights, pilot devices, selector switches, pushbuttons, etc., are mounted remote from the actuator assembly.

c. Every effort has been made to reference a relevant control schematic for each valve actuator on the PLAN schedules. However the contractor is responsible for verifying that the equipment furnished accommodates the controls configuration as defined on all electrical and instrumentation drawings, prior to bidding the project.

d. Modulating Valves: The PLANS require several valves that modulate in response to a 4-20 mA signal and provide a 4-20 mA position indication. For these valves, provide feedback potentiometer and integral electronic positioner/comparator circuit to maintain valve position, AC motor with reversing starter, and controller capable of 1200 starts per hour and Duty cycle limit timer and adjustable band width to reduce actuator hunting. They are to operate with the following control description:

1) The actuator shall include a HAND/OFF/DCS switch or pushbutton and an OPEN/STOP/CLOSE switch or pushbutton.

2) In the HAND position, the actuator shall be controlled by the OPEN/ STOP/CLOSE switch. Motor shall drive the valve to fully OPEN or CLOSED position when the pushbutton is momentarily depressed. Motor shall stop in mid-travel when the stop button is depressed.

3) In the DCS position, the actuator shall position the valve in response to a 4-20 mA DC signal with 4 mA corresponding to FULLY CLOSED and 20 mA to FULL OPEN.

4) HAND/OFF/DCS and OPEN/STOP/CLOSE devices shall be integral with the actuator for actuator unless otherwise indicated.

5) Dry contact for remote indication of the DCS status of the selector switch.

6) Actuators shall include an integral position transmitter producing a 4-20 mA DC signal to continuously indicate the valve position. 4 mA shall correspond to the FULLY CLOSED position. The transmitter shall be capable of driving an external Load impedance of zero to 500 ohms.

7) Double-acting limit switches field adjusted to trip at any point between FULLY OPENED or FULLY CLOSED.

8) Double-acting torque switches to protect valve from excessive loads at any point between FULLY OPENED or FULLY CLOSED.

5. Operation:

a. Open-close service:

1) Operators shall operate automatically by remote signal specified and as indicated on the PLANS.

2) Remote signal shall control, with hand switch in REMOTE position, self-contained electromechanical reversing starter shall cause valve to open or close.
3) In LOCAL position, control motorized operator with local control station.

b. Modulating service:
1) Actuator controller: Microprocessor based and using proportional-integral derivative algorithm to calculate actuator response.
2) Controller shall compare 4-20mA direct-current analog command signal to analog feedback signal and move actuator accordingly.
3) Microprocessor-based controller shall control integrally mounted solid state reversing starter.

c. Where indicated on the PLANS, provide 4-20mA direct-current analog output signal for continuous remote monitoring of position.

d. Controller system: Rated for continuous duty.

e. Operation: As specified.

G. Tagging: Provide per Section 15075 “Mechanical Identification”.

H. Limit Switches for Manual Valves:
1. Provide for the manual valves as listed on Valve Schedule in Drawings.
2. Factory installed limit switches to be installed on the valve by valve manufacturer.
3. Provide two SPDT switches one for the valves fully OPEN and one for fully CLOSED position. Provide each assembly with two 5-amp, 125V AC switches. Switches shall be actuated by a position indicator mechanism.
4. Valve shall also be provided with local position indication.
5. Limit switches shall be provided standard with NEMA 4X enclosure. Where Class I, Group C and D, Division I and II areas are indicated on the schedule provide suitable enclosures.
6. Limit switches shall be valve manufacturer standard.

I. Extension Bonnet for Valve Operator: Complete with stem and accessories for valve and operator.
1. Manufacturers and Products:
a. Pratt.
b. Allis-Chalmers.

J. Floor Stand and Extension Stem:
1. Nonrising, indicating type.
2. Complete with stem, coupling, handwheel, stem guide brackets, and yoke attachment.
3. Stem Guide: Space such that stem L/R ratio does not exceed 200.
4. Anchor Bolts: Type 304 SST.
5. Manufacturers and Products:
a. Clow; Figure F-5515.
b. Mueller, Figure A-26426.

K. Floor Box and Stem:
1. Plain type, for support of nonrising type stem.
2. Complete with stem, operating nut, and stem guide brackets.
3. Stem Guide: Space such that stem L/R ratio does not exceed 200, capable of being mounted with wall bracket; adjustable in two directions.
4. Anchor Bolts: Type 304 SST.
5. Manufacturers and Products:
a. Neenah Foundry; R 7506.
b. Clow; No. F5690.

L. Chain Wheel and Guide:
   1. Handwheel direct-mount type.
   2. Complete with chain.
   3. Galvanized or cadmium-plated.
   4. Manufacturers and Products:
      a. Clow Corp.; Figure F-5680.
      b. Walworth Co.; Figure 804.
      c. DeZurik Corp.; Series W or LWG.

M. Cast Iron Valve Box: Provide per details on PLANS.

PART 3 - EXECUTION

3.01 GENERAL

A. Provide incidental work and materials necessary for installation of valves including flange gaskets, flange bolts and nuts, valve boxes and covers, concrete bases, blocking, and protective coating.

B. Where needed, furnish and install additional valves for proper operation and maintenance of equipment and plant facilities under the following circumstances:
   1. Where such additional valves are required for operation and maintenance of the particular equipment furnished by CONTRACTOR.
   2. Where such additional valves are required as a result of a substitution or change initiated by CONTRACTOR.

3.02 PREPARATION

A. Preparation prior to installation:
   1. Install valves after the required submittal on installation has been accepted.
   2. Determine the face-to-face dimensions of flanged valves after flanged valves are selected.

B. Fabricate piping to lengths taking into account the dimensions of valves.

3.03 ERECTION/INSTALLATION/APPLICATION AND/OR CONSTRUCTION

A. Flange Ends:
   1. Flanged valve boltholes shall straddle vertical centerline of pipe.
   2. Clean flanged faces, insert gasket and bolts, and tighten nuts progressively and uniformly.
   3. Orient all bolts and nuts in same direction to provide an orderly installation.
   4. Provide threaded bolts or threaded rod of size, length and materials as recommended by the valve manufacturer where required to connect flange piping or fittings to valve. Threaded rods or studs shall be installed in the valve before connecting the valve to pipe or fitting where required to install the valve. (Example: Bolts on the inside of a 90-bend when bolted to a plug valve.)

B. Threaded Ends:
   1. Clean threads by wire brushing or swabbing.
   2. Apply joint compound or Teflon tape on external (male) threads to prevent forcing compound into valve seat area.

C. Valves with soldered connections:
   1. Do not overheat connection to prevent damage to resilient seats and metal seat rings.
   2. Position valves in full open position before starting soldering procedure.
   3. Apply heat to piping rather than to valve body.

D. Valve Orientation:

1. Install operating stem vertical when valve is installed in horizontal runs of pipe having centerline elevations 4 feet 6 inches or less above finished floor, unless otherwise shown.
2. Install operating stem horizontal in horizontal runs of pipe having centerline elevations between 4 feet 6 inches and 6 feet 9 inches above finish floor, unless otherwise shown.
3. Orient butterfly valve shaft so that unbalanced flows or eddies are equally divided to each half of the disc, i.e., shaft is in the plane of rotation of the eddy.
4. If no plug valve seat position is shown, locate as follows:
   a. Horizontal Flow: The flow shall produce an "unseating" pressure, and the plug shall open into the top half of valve.
   b. Vertical Flow: Install seat in the highest portion of the valve.

E. Locate valve to provide accessibility for control and maintenance. Install access doors in finished walls and plaster ceilings for valve access.

F. Extension Stem for Operator: Where the depth of the valve is such that its centerline is more than 3 feet below grade, furnish an operating extension stem with 2-inch operating nut to bring the operating nut to a point 6 inches below the surface of the ground and/or box cover.

G. Torque Tube: Where operator for quarter-turn valve is located on floor stand, furnish extension stem torque tube of a type properly sized for maximum torque capacity of the valve.

H. Valve Box and Stem: Install floor boxes in concrete with lid flush to floor. Place top of valve boxes flush with finished grade or as otherwise indicated on the PLANS. Steel extension stem length shall locate operating nut in valve box.

I. Chain Wheel and Guide: Install chain wheel and guide assemblies or chain lever assemblies on manually operated valves over 6 feet 9 inches above finished floor. Where chains hang in normally traveled areas, use appropriate "L" type tie-back anchors.

3.04 TESTS AND INSPECTION

A. Valve may be either tested while testing pipelines, or as a separate step.

B. Test that valves open and close smoothly with operating pressure on one side and atmospheric pressure on the other, in both directions for two-way valve and applications.

C. Inspect air and vacuum valves as pipe is being filled to verify venting and seating is fully functional.

D. Count and record number of turns to open and close valve; account for any discrepancies with manufacturer's data.

E. Set, verify, and record set pressures for all relief and regulating valves.

F. Automatic valve to be tested in conjunction with control system testing.

G. Test hydrostatic relief valve seating; record leakage. Adjust and retest to maximum leakage of 0.1 gpm per foot of seat periphery.

3.03 MANUFACTURER'S FIELD SERVICES

A. Provide manufacturer's field services per Section 01445, "Manufacturers Field Services".

B. Manufacturer's Services and Certificate of Proper Installation: Provide Manufacturer's Services and Manufacturer's Certificate of Proper Installation in conformance with the requirements of Section 01445, "Manufacturers Field Services". Manufacturer's representation shall provide supervision of equipment installations, field inspection of equipment before startup and the executed copies Manufacturers Services and Certificate of Proper Installation.

C. Unless otherwise specified, provide a minimum of 1/2 person-day and 1 trip for CONTRACTOR assistance for installation assistance, startup assistance, functional and/or performance testing, and completion of Manufacturer's Certificate of Proper Installation, as specified in Section 01445, "Manufacturers Field Services".

D. Provide a minimum of 1/2 person-day and 1 trip for OWNER training at OWNER's request, as specified in Section 01445, "Manufacturers Field Services".

E. The person days and trips provided by the manufacturer shall be provided for each valve type and operator that requires routine maintenance beyond scheduled exercising of the unit.

3.04 - 3.09 (NOT USED)

3.10 SCHEDULES

A. Requirements relative to this Section are shown on Valve Schedule located in the PLANS.

B. Geared operators: Provide geared operators for following valves:
   1. Manual Valves, multi turn, larger than 6 inches, nominal size, on liquid service.

C. Handwheel operators: Provide handwheel operators for valves mounted 6 feet or less above floors.

D. Chain wheel operators: Provide chain wheel operators for valves mounted more than 6 feet to center line above floors.

3.11 MEASUREMENT AND PAYMENT

No separate measurement or payment for work performed under this Section. Include cost of same in Contract price bid for work of which this is a component part.

END OF SECTION

SECTION 15114

CHECK VALVES

PART 1 GENERAL

1.01 SUMMARY

A. Section includes: Center guide (silent) check valves, Swing check valves, Cushioned swing check valves, and Plastic ball check valves.

1.02 RELATED REQUIREMENTS:

A. Other related work as called for on PLANS or specified elsewhere in this or other TECHNICAL SPECIFICATION Sections.

1.03 REFERENCES

The publications listed below form a part of this Specification to the extend referenced. The publications are referred to in the text by basic designations only.

AMERICAN WATER WORKS ASSOCIATION (AWWA)

C508	Standard for Swing-Check Valves for Waterworks Service 2 Inch Through 24 Inch (50-mm Through 600-mm) NPS

AMERICAN SOCIETY OF MECHANICAL ENGINEERS (ASME)

B16.1	Gray Iron Pipe Flanges and Flanged Fittings: Classes 25, 125, and 250

AMERICAN SOCIETY FOR TESTING AND MATERIALS (ASTM)

ASTM A 126	Standard Specification for Gray Iron Castings for Valves, Flanges, and Pipe Fittings
ASTM A 276	Standard Specification for Stainless Steel Bars and Shapes
ASTM A 582	Standard Specification for Free-Machining Stainless Steel Bars
ASTM B 62	Standard Specification for Composition Bronze or Ounce Metal Castings
ASTM B 582	Standard Specification for Nickel-Chromium-Iron-Molybdenum-Copper Alloy Plate, Sheet, and Strip
ASTM B 584	Standard Specification for Copper Alloy Sand Castings for General Applications

1.04 DEFINITIONS (NOT USED)

1.05 DESIGN AND PERFORMANCE CRITERIA

A. Design requirements:
   1. Check valves: When not otherwise indicated on the Drawings, provide check valves suitable for service as follows:
      a. In either horizontal or vertical position.
      b. Under pressures equal and less than 150 pounds per square inch gauge.

1.06 SUBMITTALS

A. Submit the following shop drawing and product data in accordance with Specification Sections 01300 “Submittals”, Specification Section 01730 “Operation and Maintenance Data” and Specification Section 15100 “Valves”
   1. Product data.
   2. Certificates:
      a. General purpose AWWA check valves:
         1) Affidavit of compliance attesting valves provided comply with all provisions in accordance with AWWA C508.
   3. Operation and maintenance data.

1.07 – 1.11 (NOT USED)

PART 2 PRODUCTS

2.01 CENTER GUIDE (SILENT) CHECK VALVES (NOT USED)

2.02 SWING CHECK VALVES

A. Valves 1/4 inch through 3 inch: NOT USED.
B. Valves 4 inches through 30 inches:
   1. Manufacturers: One of the following or equal:
      a. Dezurik (APCO), APCO 100 SA Spring Assist Rubber Flapper Swing Check Valves

   2. Valve Design:
      a. The valve shall utilize a rubber flapper that rests on an angle of 45 degrees to the centerline of the pipe when fully close.
      b. The valve shall provide a full flow area when the flapper is fully open.
      c. Non slamming design.
      d. The valve shall include a double torsion spring mounted to the flapper that accelerates valve closure before reverse flow can occur, minimizing potential valve slam.
   3. Materials
      a. Valve body and cover: Ductile iron, ASTM A536, Grade 65-45-12
      b. Cover bolts: 316 stainless steel
      c. Flapper: Acrylonitrile-Butadiene (NBR) rubber, reinforced by carbon steel ASTM A36
      d. Spring assist torsion spring: Stainless steel
      e. Body Pipe Plug: Iron, Malleable, ASTM A48, Class 40

2.03 CUSHIONED SWING CHECK VALVES

A. Valves 1/4 inch through 16 inch: NOT USED.
B. Valves 16 inches through 30 inches:
   1. Manufacturers: One of the following or equal:
      a. Dezurik (APCO), APCO CVS-6000/6000A Cushioned Swing Check Valves
      b. G.A. Industries, Inc.
   2. Valve Design:
      a. AWWA C508, flanged end, valve body and valve disc of cast iron. Valve body seat shall be bronze or stainless steel locked in place with stainless steel lock screws and designed allow replacement of the seat in the field without special tools required. The disc seat shall be Buna-N rubber and designed to be replaceable. Disc arm shall be steel and hinge shaft of type 304 stainless steel or ASTM A582 T303 stainless steel, bronze sleeve bearings at hinge shaft. The hinge shaft shall be provided with shaft packing and gland cover. All bolts, nuts and screw sets shall be type 316 or 18-8 stainless steel.

b. Rated for 150 psi working pressure and hydrostatically tested to 1.5 times the working pressure.
c. Valve shall be designed for a horizontal installation and provided with outside adjustable levers and weights. Provide an air controlled damping device securely to the side of the valve. The damping device shall be adjustable.

2.04 PLASTIC BALL CHECK VALVES (NOT USED)

PART 3 EXECUTION

3.01– 3.02 (NOT USED)

3.03 ERECTION/INSTALLATION/APPLICATION AND/OR CONSTRUCTION

A. Install valves in accordance with manufacturer's instructions and contract requirements.
B. Coordinate with Engineer on valve direction.
C. Flapper type check valves:
   1. Install with proper orientation of flow direction arrow on valve body.
   2. When installed in horizontal pipelines, mount with shaft on vertical locations.
   3. When mounted in a vertical pipeline, directly downstream of an elbow, mount with the shaft perpendicular to the outermost portion of the elbow.
   4. Mount on downstream side of discharge silencer when used on positive displacement and centrifugal blowers.

3.04 – 3.05 (NOT USED)

3.06 ADJUSTING

A. Adjust cushioned swing check valves in the field by means of external adjustment devices to minimize pressure surges.

B. Adjust weight or spring on swing check valves to affect proper closing action on equipment shutdown.

3.07 – 3.10 (NOT USED)

3.11 MEASUREMENT AND PAYMENT

Unless otherwise indicated, no separate measurement or payment for work performed under this Section. Include cost of same in Contract price bid for work of which this is a component part.

END OF SECTION

THIS PAGE IS LEFT BLANK INTENTIONALLY

SECTION 15115

GATE VALVES

PART 1 GENERAL

1.01 SUMMARY

A. Section includes: Gate, globe, angle, plug disc and plain hose valves, and yard hydrants.

1.02 RELATED REQUIREMENTS

A. Other related work as called for on PLANS or specified elsewhere in this or other TECHNICAL SPECIFICATION Sections.

1.03 REFERENCES

The publications listed below form a part of this Specification to the extent referenced. The publications are referred to in the text by basic designation only.

AMERICAN SOCIETY OF MECHANICAL ENGINEERS (AMSE)

AMERICAN WATER WORKS ASSOCIATION (AWWA)

C 509	Resilient-Seated Gate Valves for Water Supply Service (Includes Addendum C509a-95).
C515	Standard for Reduced-Wall, Resilient-Seated Gate Valves for Water Supply Services.
C 550	Protective Interior Coatings for Valves and Hydrants.
C110/A21.1	Ductile-Iron and Gray-Iron Fittings
C500	Metal-Seated Gate Valves for Water Supply Service
C111	Rubber-Gasket Joints for Ductile-Iron Pressure Pipe and Fittings

ASTM INTERNATIONAL (ASTM)

B 98	Standard Specification for Copper-Silicon Alloy Rod, Bar, and Shapes.
D1784	Standard Specification for Rigid Poly(Vinyl Chloride) (PVC) Compounds and Chlorinated Poly(Vinyl Chloride) (CPVC) Compounds
A536	Standard Specification for Ductile Iron Castings

1.04 – 1.05 NOT USED

1.06 SUBMITTALS

A. Shop drawings: Submit the following information as specified in Sections 01300.
   1. Product Data.
   2. Certificates:
      a. General purpose AWWA gate valves.
         1) Proof-of-Design Tests: Certified statement that proof-of-design tests were performed and all requirements were successfully met.
         2) Affidavit of compliance attesting valves provided in accordance with all provisions of AWWA C509, C515.
      b. Interior epoxy coatings: Affidavit of compliance attesting that epoxy coatings applied to interior surfaces of valves and hydrants comply in accordance with all provisions of AWWA C550.
   3. Operation and Maintenance Data.

1.07 QUALITY ASSURANCE

A. Motorized operators for gates and valves: The product of a single supplier for all valves on Project.

B. Valve manufacturer to provide limit switches with valves.

C. Actuator/operator manufacturer shall coordinate with the valve manufacturer and submit calculations showing the maximum and normal operating torques for the valves and operators supplied.

1.08 DELIVERY, STORAGE AND HANDLING

A. Shipping: Deliver to the job site in manufacturer's original containers.

B. Handling and Unloading: After wet operations in building are completed.

C. Storage and Protection:
   1. Store materials in original, unopened containers in compliance with manufacturer's printed instructions.
   2. Keep materials dry until ready for use. Keep packages of material off the ground, under cover, and away from sweating walls and other damp surfaces.
   3. Protect finished surfaces from soiling and damage during handling and installation. Keep covered with a protective covering.

1.09 – 1.11 NOT USED

PART 2 PRODUCTS

2.01 GATE VALVES

A. Gate valves aboveground:
   1. Valves less than 3 inches in size for clean water and air service: Manufacturer's standard bronze, solid wedge disc, rising stem, screwed end, Class 150 pounds:
      a. Manufacturers: One of the following or equal:
         1) Crane, Figure 431.
         2) Jenkins, Figure 47.
         3) Lunkenheimer Company, Figure 2151.

2. Valves 3 inches in size and larger:
   a. Resilient wedge type in accordance with AWWA C515.
   b. Flange, iron body, and bonnet rated for 250 pound working pressure. Provide O-ring seal between valve body and bonnet.
   c. Ductile or cast iron wedge encapsulated in nitrile rubber and capable of sealing in either flow direction.
   d. Bronze stem with double or triple O-ring or braided packing stem seals.
   e. Rising stem configuration with handwheel diameter sized to allow opening of valve with no more than a 40-pound pull.
   f. Coat interior and exterior surfaces of valve body and bonnet with fusion-bonded epoxy in accordance with AWWA C550.
   g. Manufacturers: One of the following or equal:
      1) M&H/Kennedy Valve Company.
      2) Mueller.
      3) American Flow Control, Series 2500.

2.02 – 2.04 NOT USED

PART 3 EXECUTION

3.01 - 3.03 NOT USED

3.03 ERECTION/INSTALLATION/APPLICATION INSTRUCTION

A. Install valves in accordance with manufacturer's instructions.

B. Locate valve boxes where indicated on the PLANS.

C. Install valves as specified and in accordance with manufacturer’s instructions.

D. Mount yard hydrants on iron pipe risers minimum 1-inch nominal diameter or size indicated on the PLANS.

3.04 – 3.10 NOT USED

3.11 MEASUREMENT AND PAYMENT

No separate measurement or payment for work performed under this Section. Include cost of same in Contract price bid for work of which this is a component part.

END OF SECTION

THIS PAGE IS LEFT BLANK INTENTIONALLY

SECTION 15116

BUTTERFLY VALVES

PART 1 GENERAL

1.01 SUMMARY

A. Scope: Furnish and install butterfly valves for water as shown on PLANS and as specified herein.

1.02 RELATED REQUIREMENTS

A. Other related work as called for on PLANS or specified elsewhere in this or other TECHNICAL SPECIFICATION Sections.

1.03 REFERENCES

The publications listed below form a part of this specification to the extent referenced. The publications are referred to in the text by basic designation only

AMERICAN NATIONAL STANDARDS INSTITUTE (ANSI)

ANSI B16.1 1989 Cast Iron Pipe Flanges and Flanged Fittings

AMERICAN SOCIETY FOR TESTING AND MATERIALS (ASTM)

ASTM A48 1994 Standard Specification for Gray Iron Castings

ASTM 126 1993 Standard Specification for Gray Iron Castings for Valves, Flanges, and Pipe Fittings

AMERICAN WATER WORKS ASSOCIATION (AWWA)

AWWA C504 1987 Rubber-Seated Butterfly Valves

1.04 - 1.05 (NOT USED

1.06 SUBMITTALS

A. Submit the following shop drawing and product data in accordance with Specification Sections 01300 “Submittals”, Specification Section 01730 “Operation and Maintenance Data” and Specification Section 15100 “Valves”

1. Shop Drawings: For all valves and all valves with geared, cylinder, or electric operators. Include size, class, operator, orientation, valve and operator dimensions, and materials by ASTM designations.
2. Manuals: Operation and maintenance manuals to include special maintenance and adjustment instructions and expanded or detailed drawings with parts descriptions, numbers, and material specifications.
3. Certification of factory testing specified in Section 1.07 D.

1.07 QUALITY ASSURANCE

A. Valve and operator to conform fully with requirements of AWWA C504 with limitations included herein.

B. Valve, operator, and accessories to be furnished as a complete unit by valve manufacturer.

C. Standardization: All valves and operators to be of same manufacturer.

D. Testing: All valves to be hydrostatic and leak tested in accordance with AWWA C-504. Hydrostatic test inside of valve body at minimum test pressure of 1.5 times the rated working pressure for five minutes.

1.08 - 1.11 (NOT USED)

PART 2 PRODUCTS

2.01 MANUFACTURER(S)

A. Manufacturers: One of the following or equal:
   1. DeZurik.
   2. Crispin.
   3. Mueller.
   4. GA Industries.

2.02 MATERIALS AND/OR EQUIPMENT

A. Butterfly Valves- Liquid Service:
   1. General: Specified as AWWA C504 to be in compliance with AWWA C504 for Rubber Seated Butterfly Valves and following requirements:
      a. Suitable for infrequent operations after periods of inactivity.
      b. Bubble-tight with rated pressure applied from either side.
      c. No travel stops for the disc on interior of the body.
      d. Self-adjusting V-type or O-ring shaft seals. Seal shall be replaceable without disassembly of valve.
      e. Isolate metal-to-metal thrust bearing surfaces from flowstream.
      f. Buried valves shall be designed for buried service.
      g. Provide valves that conform to NSF Standard 61.
      h. Class 150B valves except as specified or indicated.
      i. Service: Filtered, chlorinated water.
   2. Valve Body: ASTM A126 Class B cast iron or ductile iron.
      a. Exposed or submerged service: Flanged short body valve.
      b. Buried service: Mechanical joint body.
      c. Wafer, lug wafer or tapped wafer valves may be used only as specified or indicated.
   3. Disc and Valve Seats:
      a. Disc: Ductile Iron.
      b. Potable Water Service: Molded new natural rubber or synthetic rubber.
      c. Provide seat mounted on disc.
      d. Provide seats offset from shaft and field replaceable for all valves 24-inch and larger.
      e. Provide seats mounted on disc, mechanically fastened to disc with Type 316 stainless steel hex head screws. Provide rubber seat reinforced with stainless steel retaining ring. Seats vulcanized or bonded to the disc are not acceptable.

2.03 - 2.04 (NOT USED)

PART 3 EXECUTION

3.01 - 3.02 (NOT USED)

3.03 ERECTION/INSTALLATION/APPLICATION AND/OR CONSTRUCTION

A. Installation:
   1. Mount as shown or for maximum operator convenience.
   2. Pressure test with piping system. Operate satisfactorily through at least three cycles.

B. Operators
   1. Position indicator required.
   2. Counter-clockwise to open.
   3. Factory mounted and tested.
   4. For buried gear operator valves, protect valves with a minimum 8 mil polyethylene film brought up and permanently taped to the valve box. Include extension stem, 2-inch square operating nut, and cast iron valve box for each buried valve. Provide locking feature if called out on PLANS.
   5. Gear to be grease packed, totally enclosed for buried service.

3.04 REPAIR/RESTORATION (NOT USED)

3.05 FIELD QUALITY CONTROL

A. Manufacturer's Field Services: Furnish services of qualified factory-trained technical representative to check installation and assist CONTRACTOR in making adjustments to mechanical stop-limiting devices.

3.06 - 3.10 (NOT USED)

3.11 MEASUREMENT AND PAYMENT

No separate measurement and payment for work performed under this Section. Include cost of same in Contract price bid for work of which this is a component part.

END OF SECTION

THIS PAGE IS LEFT BLANK INTENTIONALLY

SECTION 15117

REHABILITATION OF PUMP CONTROL VALVES

PART 1 GENERAL

1.01 SUMMARY

A. Remove, disassemble, inspect, rehabilitate and re-install four (4) existing pump control valves in Davis WTP High Service Pump Station as shown on PLANs and as specified herein.

B. This section defines the minimum requirements for the rehabilitation of existing pump control valves as shown on PLANS and as specified herein and as shown on PLANs.

C. CONTRACTOR is responsible for providing complete working pump control valves. It is CONTRACTOR's responsibility to determine and develop additional scope and procedures that are required to achieve complete working status for each valve as specified herein. All additional scope and procedures beyond those specified herein shall be submitted for OWNER's review and approval, prior to being initiated.

1.02 RELATED REQUIREMENTS:

A. Other related work as called for on PLANS or specified elsewhere in this or other TECHNICAL SPECIFICATION Sections.

1.03 REFERENCES

The publications listed below form a part of this Specification to the extent referenced. The publications are referred to in the text by basic designations only.

AMERICAN WATER WORKS ASSOCIATION (AWWA)

AWWA C507 Ball Valves, 6 Inch through 48 Inch

1.04 DEFINITIONS

"Valve Manufacturer", "Valve Repairer" and "Valve Manufacturer/Repairer" are used interchangeably in this specification section.

1.05 (NOT USED)

1.06 SUBMITTALS

A. Submit the following information as specified in Sections 01300 "Submittals" and 15100 "Valves":
   1. Work Plan
      a. Contractor shall submit a work plan for the proposed rehabilitation work. At a minimum, the work plan shall cover the following information:
         1) Schedule and duration of removal, factory rehabilitation, reinstallation and test of each valve
         2) Anticipated schedule of HSPS shutdowns, if any, and duration of each shutdown
         3) Tools/equipment and estimated labor required for removal and reinstallation
         4) Test procedure after reinstallation

5) Coordination with other construction activities in HSPS to minimize disturbance of normal plant operation

2. Product Data
   a. Size of valve and actuator and pressure rating.
   b. Drawings and technical data of replacement parts, including parts list with materials of construction and metallurgy.
   c. Description of rehabilitation procedures, sequence of construction and test plan.
   d. Installation instructions and drawings.
   e. Protective coating and interior lining products.
3. Certified Field Inspection/Test Report for each valve (prior to and after rehabilitation. The report shall include but not limited to:
   a. Manufacturer and model number of each valve to be rehabilitated;
   b. Manufacturer and model number of each valve actuator to be replaced;
   c. Evaluation, diagnosis and analysis of conditions of each valve and actuator prior to rehabilitation.
   d. Photos illustrating existing problems and issues.
   e. Rehabilitation methodology and procedures.
   f. Prior notification of field tests after rehabilitation shall be submitted to OWNER at least two weeks before the tests.
4. Manufacturer's Certification and Installation Report. The report shall include but not limited to:
   a. Furnish to ENGINEER copies of certified report prepared by manufacturer's technical representative certifying satisfactory installation, operation and in service placement of units.
   b. Certification that the rehabilitated valve assembly is in full compliance with AWWA C507 standard.
   c. Recommended valve and actuator O&M requirements.
   d. Certification that each rehabilitated valve will be able to have an adjustable normal opening/closing speed between 60 seconds and 240 seconds.

1.07 QUALITY ASSURANCE

A. System Coordination:
   1. CONTRACTOR retains overall responsibility to properly install, adjust, test, and place in operation the pump control valves.
   2. The repair of all pump control valves under this Specification shall be by a single manufacturer/repairer. The valve manufacturer/repairer shall furnish the valves as a complete and integral package to insure proper coordination, compatibility, and operation of the system.
   3. CONTRACTOR to coordinate rehabilitation work of pump control valves with rehabilitation/replacement of associated high service pumps, butterfly valves on pump suction side and valves on pump discharge side. All work in the HSPS shall be carefully coordinated to minimize the disturbance to normal plant operation and minimize the number of shutdowns needed.

B. Valve Manufacturer/Repairer's Qualifications

   1. The rehabilitation of pump discharge control valves shall be performed by a valve manufacturer who has been manufacturing similar valve equipment meeting and exceeding AWWA C507 Ball Valves standards for pump control applications for a period of at least ten years. Upon the request of the Engineer, the valve manufacturer shall provide a list of installations involving equipment of similar size and application.

C. Valve Manufacturer/Repairer's representative

1. The qualified manufacturer/repairer's service technician shall:
   a. Assist in the removal, inspection, repair and re-installation of the equipment;
   b. Check the installation before the equipment is placed into operation;
   c. Assist in the performance of field tests;
   d. Train the plant operations and maintenance staff in the care, operation and maintenance of equipment.

2. Unless otherwise authorized by the ENGINEER, the manufacturer/repairer's technician shall be a direct employee of the equipment manufacturer/repairer or a factory/shop trained technician, with at least five (5) years of experience in the installation and testing of the valve type provided under this Specification.

D. Valve shall conform to the requirements of AWWA C507 after rehabilitation.

1.08 PROJECT CONDITIONS

A. The Davis WTP High Service Pump Station consists of six pump control valves. Each valve is installed on the discharge side of a horizontal split case pump that delivers treated water to the distribution network. The access to the valves is limited due to the configurations of piping and a platform near the top of the valves.

B. The existing pump control valves are believed to be GA Industries ball valves. Each valve is operated via a pneumatic actuator and a hydraulic actuator. CONTRACTOR shall confirm valve and actuator models. The following four (4) pump control valves are to be rehabilitated:

HSPS-BV-023 (24")

HSPS-BV-024 (24")

HSPS-BV-025 (24")

HSPS-BV-026 (24")

C. The pneumatic & Hydraulic actuators associated with the above four valves are to be replaced as part of this contract.

1.09 SPARE PARTS

B. Provide spare parts that are identical to and interchangeable with the installed parts. Provide one set of the following spare parts:
   1. Static seal for cover plate of valve.
   2. Seat retainer seal for valve.
   3. Renewable Seat for valve.
   4. Any other manufacturer's recommended spare parts.
   5. All spare parts to be in suitable packaging and labeled as to the contents.

PART 2 PRODUCTS

2.01 MANUFACTURER(S)

A. The rehabilitation of pump discharge control valves shall be performed by:
   1. GA Industries, Inc.
   2. No equal.

2.02 MATERIALS AND/OR EQUIPMENT

A. All replacement parts and repair procedures shall be fully compatible with existing pump control valves in materials and functions, and exceeding minimum design requirements of AWWA standard C507. All replacement parts shall be designed for a hydrostatic operating pressure of 190 psi and estimated surge pressure of 285 psi.

B. It is anticipated that, at a minimum, the following parts of each specified valve will need to be replaced with materials of construction as specified below:
   1. Pneumatic actuator cylinder
   2. Hydraulic actuator cylinder
   3. Limit Switch assembly
   4. Seat retainer bushing: lead free bronze
   5. Rotor bushing: lead free bronze
   6. Seat retainer screws head cap screw with locking Nylon insert
   7. Seat follower screws stainless steel head cap screw
   8. Renewable seat: ultra high molecular weight polyethylene (UHMWPE)
   9. Seat retainer seal: Buna-N
   10. Backup Ring: Buna-N
   11. Access cover static seal
   12. Cover Bolts
   13. Cover Spring Pins
   14. Access Cover Bolts
   15. Renewable Bushing Screws
   16. Replacement of all soft goods and seals

2.03 – 2.04 (NOT USED)

PART 3 EXECUTION

3.01 PREPARATION

A. CONTRACTOR shall coordinate with OWNER and ENGINEER on scheduling of all removal, inspection, test, repair and installation work.

B. Take all necessary measurements in the field to determine the exact dimensions for all work and the required sizes of all equipment under this contract. All pertinent data and dimensions shall be verified.

C. Field verify and record the opening and closing speed of the existing pump control valves prior to valve removal. These settings shall be used for the rehabilitated pump control valves, unless otherwise requested by OWNER.

3.02 – 3.03 (NOT USED)

3.04 REPAIR/RESTORATION

A. Valve manufacturer/repairer's qualified representative shall be present and assist all field work involving removal, inspection, rehabilitation, re-installation and testing of pump control valves.

B. Contractor shall furnish all tools and equipment that are required for the work. Use of OWNER's equipment such as crane and air compressor is subject to the condition and availability of the equipment.

C. All rehabilitation work and procedure shall be in accordance with AWWA C507 standard to the maximum extent possible.

D. The rehabilitation work shall consist of the following general procedure:
   1. Isolate and remove each valve from the pump discharge pipe, secure the openings of the discharge piping, ship the valve to Valve Manufacturer/Repairer's shop for inspection and rehabilitation.
   2. Blast and coat of internal and external ferrous coating with NSF-61 approved Carboline 891 Epoxy (Blue 6120)
   3. Inspect and refurbish seat retainer.
   4. Blast and coat seat retainer per Valve Manufacturer/repairer's recommendation before the new seat is installed.
   5. Replace existing rubber backing ring behind the seat retainer.
   6. Clean both bronze bushing surfaces on the seat retainer and the rotor.
   7. Replace the rubber seat with ultra high molecular weight polyethylene (UHMWPE) seat.
   8. Re-install refurbished seat retainer.
   9. Replace pneumatic actuator and hydraulic actuator.
   10. Test rehabilitated pump control valves per AWWA C507.
   11. Deliver the rehabilitated pump control valve to job site and re-install and re-pipe as needed.
   12. Replenish oil supply for all actuators.
   13. Disposal: All materials not designated for reuse or salvage to be legally disposed of off-site by the CONTRACTOR.

3.05 DELIVERY AND STORAGE

A. Prepare valves and appurtenances for shipment according to manufacturer's recommendation.

B. Once delivered to the job site, Contractor shall store and handle all valves according to the manufacturer's recommendation and shall keep them in area from weather and moisture. Materials shall not be stored directly on ground and shall be kept in safe place to prevent damage to interior or exterior surfaces.

3.06 ERECTION/INSTALLATION/APPLICATION AND/OR CONSTRUCTION

A. Installation shall be in strict accordance with the manufacturer's instructions and recommendations in the locations shown on the Plans and shall:
   1. Install for maximum operator access and convenience.
   2. Install equipment in accordance with approved submittals.
   3. Align valve and adjacent piping and provide adequate supports.
   4. Pressure test with piping system.
   5. Operate satisfactorily through at least three cycles.

B. The manufacturer/repairer shall be present during the installation of the items to be supplied and inspect the final installation and make necessary adjustment of the equipment and certify that the installation of the equipment has been performed to their satisfaction. Written certification shall be required to be submitted prior to operational test.

3.07 FIELD QUALITY CONTROL

A. Field Testing: In the presence of the Engineer, such tests as necessary to indicate and demonstrate that the pump control valve system is correctly installed. Contractor to coordinate testing with both valve manufacturer/repair representative and pump manufacturer/repair representative. A 2-hour operational testing period of the system is required before acceptance. If the pump control valve system does not meet the specified requirements, corrective measures shall be taken to satisfy the conditions specified at no additional cost to the Owner. All test procedures shall be in accordance

with functional requirement specified above, and certified results of tests shall be submitted. The Contractor shall provide all temporary gauges and testing tools, shall make necessary tapped holes in the pipes, and install all temporary piping and wiring required for the field acceptance tests. Written test procedures shall be submitted to the Engineer for approval 14 days prior to testing.

B. Operational testing to include:
   1. Simulation of the valve opening/closing cycle during normal pump start up and stop processes.
   2. Simulation of valve/pump malfunctioning to confirm emergency closure operation. Coordinate with OWNER for testing method and procedure.
   3. Simulation of manual valve throttling when pump is running.

C. If required, take corrective action and the units shall be retested to ensure full compliance with this Section. All costs associated with the field tests or any required corrective action shall be borne by the Contractor.

D. Valve Repairer's Field Services: Furnish services of qualified factory-trained technical representative to provide a minimum of four (4) visits to check installation and assist CONTRACTOR in making adjustments to ensure proper settings on the equipment.

E. Valve repairer's authorized qualified representative to provide a minimum of one eight-hour working day for assistance during system functional and operational tests and to train Owner's personnel in the operation, maintenance, and troubleshooting of the equipment provided.

F. Coordinate with other work and run operational tests. Tests to be witnessed by ENGINEER and manufacturer's technical representative.

G. A certificate from the equipment manufacturer shall be submitted stating that the installation of the equipment is satisfactory, that the equipment is ready for operation, and that the operating personnel have been suitably instructed in the operation, lubrication and care of each unit.

3.08 ADJUSTING

A. Manufacturer's technical representative to inspect, check, assist in making adjustments if necessary, and approve for placing in operation. Contractor to coordinate with valve manufacturer when valve adjustments are required.

3.09 –3.10 (NOT USED)

3.11 MEASUREMENT AND PAYMENT

Unless otherwise indicated, no separate measurement or payment for work performed under this Section. Include cost of same in Contract price bid for work of which this is a component part.

END OF SECTION

SECTION 15118

PRESSURE REDUCING AND PRESSURE RELIEF VALVES

PART 1 GENERAL

1.01 SUMMARY

A. Section includes: Pressure reducing and pressure relief valves for water, air, sludge and chemical service.

1.02 RELATED REQUIREMENTS:

A. Other related work as called for on PLANS or specified elsewhere in this or other TECHNICAL SPECIFICATION Sections.

1.03 REFERENCES

The publications listed below form a part of this Specification to the extend referenced. The publications are referred to in the text by basic designations only.

AMERICAN SOCIETY OF MECHANICAL ENGINEERS (ASME)

ASTM B16.42	Ductile Iron Pipe Flanges and Flanged Fittings: Classes 150 and 300.

AMERICAN SOCIETY FOR TESTING AND MATERIALS (ASTM)

ASTM A 48	Standard Specification for Gray Iron Castings.
ASTM A 126	Standard Specification for Gray Iron Castings for Valves, Flanges, and Pipe Fittings.
ASTM A 536	Standard Specification for Ductile Iron Castings.

1.04 - 1.05 (NOT USED)

1.06 SUBMITTALS

A. Submit the following information as specified in Sections 01300 “Submittals” and Specification Section 15100 “Valves”:
   1. Product data.
   2. Operation and maintenance data.

1.07 – 1.11 (NOT USED)

PART 2 PRODUCTS

2.01 WATER PRESSURE REDUCING VALVES (NOT USED)

2.02 WATER PRESSURE RELIEF/ PRESSURE SUSTAINING VALVES (NOT USED)

2.03 SURGE RELIEF VALVES

A. Surge relief valve:
   1. Manufacturers: One of the following or approved equal:
      a. Singer Valve, model 106-RPS-RR
      b. Cla-Val 52-17-1
      c. Or equal.
   2. Design:

a. Service: finished water.
b. The surge relief valve shall function to open rapidly on an over-pressure caused by sudden pump stoppage due to power failure or other means, and other cause of surges in the pipeline.
c. Valve(s) shall be a hydraulically operated globe valve. The inner valve assembly shall be top and bottom guided by means bearing bushings. The inner valve assembly shall be the only moving part and shall be securely mounted on a AISI 316 Stainless Steel stem. Lower grades of stainless steel stems will not be acceptable.
d. The valve cover shall have a separate stem cap on valves larger than 2 in / 50 mm giving access to the stem for alignment check, spring installation and ease of assembly.
e. On valve(s) 1 in / 25 mm and larger, bonnets shall be accurately located to bodies utilizing locating pins. Locating pins shall eliminate corrosion resulting from the use of uncoated ductile iron to ductile iron surfaces. Valves with lipped spigot covers shall not be acceptable due to risk of rust and difficulty in assembly.
f. The valve(s) shall form a drip-tight seal between the stationary stainless steel seat ring and the resilient disc, which has a rectangular cross-section and is retained by clamping on three and one half sides. The resilient disc shall be constructed of Buna-N or EPDM for normal service conditions.
g. All repairs and maintenance shall be possible without removing the valve from the line. To facilitate easy removal and replacement of the inner valve assembly and to reduce unnecessary wear on the guide, the stem shall be vertical when the valve is mounted in a horizontal line.
h. Each valve shall be air tested prior to shipment. The standard test shall include leakage test, seat leakage test, and stroke test.
i. Valve(s) 10 in / 250 mm and larger shall provide smooth frictionless motion and maximum low flow stability. The diaphragms shall not be used as a seating surface.
j. The stainless steel stem shall be provided with wrench flats on all valves 1 in / 25 mm to 16 in / 400 mm, for ease of assembly and maintenance. Wrench flats will be fully accessible when inner valve is assembled.

3. Materials:
a. All pressure containing components shall be constructed of ASTM A536-65 / 45 / 12 ductile iron. The flanges shall be designed to ANSI Class 150 or Class 300 standards. Flange drilling to ANSI shall be standard; however, ISO and other drillings shall be available upon request.
b. Valve(s) shall have a protective fusion bonded epoxy coating internally and externally. The protective fusion bonded epoxy coating shall conform to the ANSI / AWWA C116 / A21.16 (current version) specification. No machining of any external parts after final coating will be acceptable to ensure a continuous coating surface throughout the entire valve.
c. Seat Ring: 316 Stainless Steel
d. Disc Retainer: 316 Stainless Steel -
e. Stem: 316 Stainless Steel
f. Stem Nut: 316 Stainless Steel
g. Spring: 316 Stainless Steel
h. Guide Bushings: 316 Stainless Steel
i. Diaphragm: EPDM or Buna-N / Viton
j. Resilient Disc: EPDM or Buna-N / Viton
k. Coating: NSF61 Approved Fusion Bonded Epoxy, thickness 8-10 mils (200-250 microns)
l. Fasteners 18-8 Stainless Steel 316 Stainless Steel

PART 3 EXECUTION

3.01 GENERAL

A. General: Install each type of valve in accordance with manufacturers' printed instructions.

3.02 – 3.10 (NOT USED)

3.11 MEASUREMENT AND PAYMENT

Unless otherwise indicated, no separate measurement or payment for work performed under this Section. Include cost of same in Contract price bid for work of which this is a component part.

END OF SECTION

THIS PAGE IS LEFT BLANK INTENTIONALLY

Section 15176

BLADDER-TYPE HYDROPNEUMATIC SURGE SUPPRESSION SYSTEM

PART 1 GENERAL

1.01 SUMMARY

A. Design, furnish, install and test horizontal bladder-type hydro pneumatic tanks for High Service Pump Station surge control at locations shown on PLANs.

1.02 RELATED REQUIREMENTS

A. Related work as called on PLANS or specified elsewhere in this or other TECHNICAL SPECIFICATIONS.

1.03 REFERENCES

The publications listed below form a part of this specification to the extent referenced. The publications are referred to in the text by basic designation only.

AMERICAN SOCIETY OF MECHANICAL ENGINEERS (ASME)

ASME Section VIII Boilers and Pressure Vessels

AMERICAN SOCIETY FOR TESTING AND MATERIALS (ASTM)

ASTM A36 Standard Specifications for Carbon Structural Steel

ASTM A285 Standard Specification for Pressure Vessel Plates, Carbon Steel, Low- and Intermediate-Tensile Strength

1.04 SYSTEM DESCRIPTION

A. Tanks shall be horizontal, bladder-type vessel suitable for use with raw water from Lake Austin. Tank shall comply with Section VIII, Division 1, of the ASME Boiler and Pressure Vessel Code.

B. Surge tank sizing shall be based on a hydraulic transient analysis performed by the manufacturer but shall have the following minimum dimensions:
   1. Volume:
      SV-ST-001 30,000 Gallons (nominal)
   2. Diameter: no greater than 12.5-feet.

C. Structural Design and Supports shall include the tank, supports, and anchor bolts, and shall be designed based upon local building codes in addition to the following criteria:
   1. Design for a hydrostatic operating pressure of 165 psi and an estimated surge pressure of 200 psi with no reactive load permitted through the inlet/outlet piping.
   2. Support tank by 4 support legs for attaching to a concrete floor or slab. Material of construction shall comply with ASTM A 36 or ASTM A 285, Grade C. Weld the support legs to the tank.
   3. Seismic Design Parameters to conform to the current IBC.
   4. Wind Design Parameter to conform to the current IBC.

1.05 DESIGN AND PERFORMANCE CRIRETIA (NOT USED)

1.06 SUBMITTALS

A. Furnish the following in accordance with specification section 01300, “Submittals” and section 01730 “Operation and Maintenance Data”.
   1. Layout drawings including the dimension of all equipment, accessories, supports, connections, control panel, outlets, and all related piping.
   2. Equipment weight, tank legs and anchor bolt designs, signed and sealed by a professional engineer licensed in the State of Texas.
   3. Surge analysis report as per 1.07 C of this section.
   4. Service Contract, including contact information for the manufacturer’s authorized representative responsible for maintaining the equipment in accordance with the manufacturer supplied Service Contract, defined in Paragraph 1.07 of this section.

1.07 QUALITY ASSURANCE

A. The manufacturer shall be capable of demonstrating technical competence in the design and manufacture of bladder-type surge suppression systems with a minimum of five years’ experience with the type of system described by this specification.

B. The manufacturer-approved installer shall have installed products of similar bladder-type surge suppression systems on a minimum of five projects with a satisfactory performance record.

C. The manufacturer shall submit to the ENGINEER for review the results of a hydraulic transient analysis from which the surge suppression system will be designed. The surge suppression system shall be designed to match the dynamics of the High Service Pump Station discharge system. The pressure surge in the pipeline system following sudden pump station shutdown with 5 of 6 pumps in service, a nominal flow of 73.3 MGD, shall be guaranteed not to exceed 200 psig and not to fall below -7.0 psig at any point within the transmission pipeline between High Service Pump Station and Davis Water Treatment Plant.

D. The manufacturer shall be ISO-9001 certified which includes engineering, design, manufacturing and testing complete components. Vessel manufacturer shall manufacture their own vessels and bladders within the same plant as per quality control through ISO-9001.

E. Manufacturer shall provide in-house x-rays of welds, hydrostatic test, and ASME inspection. Hydrostatic testing pressure shall be 150% of the estimated maximum surge pressure of the tank. The ENGINEER reserves the right to inspect the vessel manufacturing facility to confirm that the above requirements are being met.

F. Preventative Maintenance Service Contract:
   1. Provide a five-year Service Contract for Surge Suppression System, with a minimum of two annual site visits per year, with the option to renew contract for two, additional five year periods.
   2. Duration of Service Contract is to be five years from CONTRACT Final Completion.
   3. The five-year Service Contract shall have cost deposited in a bank CD (certificate of deposit) in an amount equal to 100 percent of the total “not to exceed” five year cost of the Service Contract, with one fifth of the total cost deducted once a year.
   4. Service Contract to be provided by equipment manufacturer/manufacturer authorized representative and is to cover, at a minimum, the following items:

a. Annual inspections, testing, cleaning, adjustments, and re-charging of the tank.
b. Provide assistance to OWNER's operations and maintenance staff, including diagnostics and troubleshooting service.
c. Manufacturer's authorized representative to be present at project location within five days of notification of need for services. In the event of a low tank alarm, OWNER will contact authorized representative for immediate re-charging of the tank.

1.08 DELIVERY, STORAGE, AND HANDLING

A. The tanks is to be shipped on skids or within a protective framework to prevent damage during transit.

B. Provide internal cross bracing as necessary to prevent distortion damage during shipping.

C. Flanges are to be equipped with flange protectors and all openings are to be covered during shipment.

D. Inspect all tanks upon delivery to the jobsite and ensure that there are no holes or cracks.

1.09 – **1.11** (NOT USED)

PART 2 PRODUCTS

2.01 MANUFACTURERS

A. Manufacturers: One of the following or equal:
1. Blacoh

2.02 MATERIALS AND/OR EQUIPMENT

A. The manufacturer's design procedures along with all tank materials, shop fabrication procedures and inspection procedures shall comply with Section VIII, Division 1, of the ASME Boiler and Pressure Vessel Code.
1. The tank shell shall be fabricated from steel plate that conforms to Table UCS-23 of the ASME Code.
2. The tank shell shall be constructed of deep drawn carbon steel double welded domes and side shells with double welded seams.
3. Provide a National Board-approved ASME Liquid Pressure Relief Valve set at 10% above the operating pressure.
4. Provide ASME code stamp, National Board Registration number, tank volume and pressure rating on the tank.

B. The surge tank model, steel, coatings, bladder and manufacturing facility shall be NSF-61 listed and approved for potable water. Documents listing NSF-61 approval for model, steel, coatings, bladder and manufacturing facility shall be provided.

C. Tank shall be equipped with a NSF 61 approved PVC bladder. The bladder shall be fabricated to conform to the inner shape of the vessel. Bladder Tank shall be of the horizontal configuration.

D. The tank shall include one (1) 30-inch diameter removable side man way to allow inspection and maintenance of the vessel interior and the tank bladder.

E. Provide 1 inch 300 lb ANSI flanged connection at the top of the tank to contain a gas charging valve and pressure gauge. The gas charging piping system shall be 316 stainless steel and plumbed to 5 feet from the ground level. The pre-charge pressure shall be maintained in the cavity between the tank shell and the bladder.

F. Anchor bolt assembly (studs, nuts, washers, etc.) to be 316 Stainless Steel. Complete anchor bolt assembly (studs, nuts, washers, etc.) to be provided by contractor.

G. Provide a complete differential pressure indication system to indicate the water level in the surge tank. Install pressure sensors per manufacturer recommendation. The control panel enclosure shall be NEMA 4X. Provide local digital indication for water level in the tank and alarm conditions, and provide 4-20mA signal for remote level indication.

H. Access Ladder: Design and furnish steel access ladder attached to the tank to provide adequate access to the gas charging valve and pressure sensors installed at top of the tank. Access ladder to comply with all applicable OSHA regulations. Reference drawings for position of ladder.

I. Service Conditions

1. Tank hydraulic performance conditions and design data shall be as shown below. In the event that the manufacturer's hydraulic transient analysis yields varying design requirements, the ENGINEER should be contacted.

a.	Tank Configuration:	Horizontal
b.	Minimum Capacity:	26,371 Gallons
c.	Minimum Operating Pressure:	165 psi
d.	Minimum Test Pressure:	200 psi
e.	Pre-charge Pressure Setting: Based on surge analysis performed by Manufacturer	
f.	Outlet Flange Size:	30 inch
g.	Outlet Pressure Rating:	ANSI Class 300 per ANSI B16.5

J. Painting and Coating

1. Prepare surfaces and apply protective finishes as specified in Section 09902.
2. All painting and coating shall be completed at the factory. The painting system for tank interior shall be NSF 61 approved. Contractor to coordinate with Owner on color selection.

K. Insulation and Heat Tracing

1. Provide ASTM C534, Type I flexible unicellular, closed-cell elastomeric piping insulation for air piping with a minimum thickness of 1 inch. Insulation shall be Armaflex by Armacell Company or approved equal. Insulation jacket shall be smooth or embossed ASTM C921 Type 1 aluminum metal jacket with weather-proof construction.
2. Provide heat tracing for all stainless steel air piping, valves, fittings and differential pressure transmitter on the surge vessel. Heat trace shall be powered by surge vessel control panel with a 20A service with surge suppressor. Heating cable shall be self-regulating, energy efficient low temperature heating cable, 16 AWG buss wire with 3 watts per foot, 120 volt, by Chromalox or approved equal.

2.03 – 2.04 (NOT USED)

PART 3 EXECUTION

3.01– 3.02 (NOT USED)

3.03 ERECTION/INSTALATION/APPLICATION INSTRUCTION

A. Surge suppression system including the tank and all appurtenances shall be installed complete in place in accordance with the manufacturer's recommendations and ready for operation. All supports, piping, valves, and related appurtenances shall be provided and installed by the CONTRACTOR at no additional cost to the OWNER.

3.04 REPAIR/RESTORATION (NOT USED)

3.05 FIELD TESTING

A. The surge arrestor equipment shall be field tested at the completion of the installation. The test shall consist of progressive sudden shutdowns of the pumps in a step-wise manner after the pump station is running at full capacity (or a simultaneous shutdown of all pumps, at the discretion of the ENGINEER). The manufacturer's representative, ENGINEER, OWNER and the CONTRACTOR shall all be present during the on-site tests.

B. Manufacturer field services: Provide services of a qualified manufacturer's representative to provide a minimum of two, eight-hour working day assistance for the installation, preliminary operational testing, and final operational testing. In addition, operator training services for the OWNER'S personnel shall be provided on-site for a one eight-hour working day. OWNER training to include instruction on the differential pressure indication system, proper data and inspection logging, and monitoring requirements.

C. The manufacturer shall inspect system before initial start-up and certify that system has been correctly installed and prepared for start-up. Manufacturer to include initial pressure readings, which will serve as the baseline settings for OWNER's operation and maintenance staff.

3.06 – 3.10 (NOT USED)

3.11 MEASUREMENT AND PAYMENT

Unless otherwise stated, no separate measurement or payment for work performed under this Section. Include cost of same in Contract price bid for work of which this is a component part.

END OF SECTION

THIS PAGE IS LEFT BLANK INTENTIONALLY

SECTION 15815

METAL DUCTWORK

PART 1 GENERAL

1.01 SUMMARY

A. Section Includes:
   1. Rectangular ducts and fittings.
   2. Hangers and supports.

1.02 RELATED REQUIREMENTS

A. Other related work as called for on PLANS or specified elsewhere in this or other TECHNICAL SPECIFICATION Sections.

1.03 PERFORMANCE REQUIREMENTS

A. Delegated Duct Design: Duct construction, including sheet metal thicknesses, seam and joint construction, reinforcements, and hangers and supports, shall comply with SMACNA's "HVAC Duct Construction Standards - Metal and Flexible" and performance requirements and design criteria indicated in "Duct Schedule" Article.

B. Structural Performance: Duct hangers and supports shall withstand the effects of gravity loads and stresses within limits and under conditions described in SMACNA's "HVAC Duct Construction Standards - Metal and Flexible"

C. Airstream Surfaces: Surfaces in contact with the airstream shall comply with requirements in ASHRAE 62.1-2010.

1.04 REFERENCES

The publications listed below form a part of this Specification to the extent referenced. The publications are referred to in the text by basic designation only.

AMERICAN SOCIETY FOR TESTING AND MATERIALS (ASTM)

ASTM B 209 Specification for Aluminum and Aluminum-Alloy Sheet and Plate

SHEET METAL AND AIR CONDITIONING CONTRACTORS' NATIONAL ASSOCIATION (SMACNA)

Heating Ventilation Air Condition Duct Construction Standards - Metal & Flexible.

1.05 SUBMITTALS

A. Furnish in accordance with Specification Section 01300, “Submittals”. In addition to the items specified in Section 01300 “Submittals”, furnish the following:
   1. Shop Drawings:
      a. Fabrication, assembly, and installation, including plans, elevations, sections, components, and attachments to other work.
      b. Factory- and shop-fabricated ducts and fittings.
      c. Duct layout indicating sizes, configuration, liner material, and static-pressure classes.

d. Elevation of top of ducts.
e. Penetrations through fire-rated and other partitions.
f. Equipment installation based on equipment being used on Project.
g. Locations for duct accessories, including dampers, turning vanes, and access doors and panels.
h. Hangers and supports, including methods for duct and building attachment and vibration isolation.

2. Coordination Drawings: Plans, drawn to scale, on which the following items are shown and coordinated with each other, using input from installers of the items involved:
   a. Duct installation in congested spaces, indicating coordination with general construction, building components, and other building services. Indicate proposed changes to duct layout.
   b. Penetrations of smoke barriers and fire-rated construction.
   c. Items penetrating finished ceiling including the following:
      1) Lighting fixtures.
      2) Air outlets and inlets.
      3) Speakers.
      4) Sprinklers.
      5) Access panels.

1.06 QUALITY ASSURANCE

A. ASHRAE Compliance: Applicable requirements in ASHRAE 62.1-2004, Section 5 - "Systems and Equipment" and Section 7 - "Construction and System Start-Up."

B. ASHRAE/IESNA Compliance: Applicable requirements in ASHRAE/IESNA 90.1-2004, Section 6.4.4 - "HVAC System Construction and Insulation."

PART 2 PRODUCTS

2.01 MATERIALS AND/OR EQUIPMENT

A. Ducts: Aluminum alloy 3003-H14 in accordance with ASTM B 209.

B. Flexible connectors: As specified in related Sections.

C. Turning vanes: Match duct material.

D. Reinforcing: Formed or extruded aluminum angles.

E. Ductwork insulation: As specified in related Sections.

F. Components
   1. Duct sleeves:
      a. Sleeve flanges: 4 inches wide.
      b. Size: 2 inches larger than the duct or duct with external insulation.
   2. Access openings:
      a. Size: 2 inches less than duct size.
      b. Doors: Gauge not less than duct sheet. Provide continuous hinge and latch on outside.
      c. Gasket: Along door periphery.
      d. Visual panel: 1/8 inch thick, clear plexiglass.
   3. Turning vanes:
      a. Material: Same as ductwork.
      b. Type:

1) Single-blade vanes for duct widths less than 36 inches.
2) Airfoil type vanes for duct widths of 36 inches and greater. No trailing edge.

c. Mounted in side rails.
d. Provide turning vanes for square-turn elbows and splitters.
e. Size: 2-inch blades for ducts up to 18 inches, 4-1/2 inch blades for larger ducts.

4. Splitter dampers: Provide at branch take-offs where necessary for balancing system.
5. Extractors:
   a. Components:
      1) Synchronized steel curved blades.
      2) Heavy side rails.
      3) Screw operator.
   b. Provide extractors at take-off from main supply duct adjacent to diffusers, registers, or grilles where splitter is not used.

2.02 FABRICATION

A. Fabricate ductwork to the configuration and dimensions indicated on the Drawings.

B. Dimensions indicate net free area. Increase duct dimensions by thickness of insulation when internal insulation is specified.

C. Do not utilize S-clips, duct tape, or externally applied mastic on medium pressure duct systems.

D. Do not use snap lock seams.

E. Provide flexible duct connectors at all connections to fans and other air movement equipment.

2.03 SEALANT AND GASKETS

A. General Sealant and Gasket Requirements: Surface-burning characteristics for sealants and gaskets shall be a maximum flame-spread index of 25 and a maximum smoke-developed index of 50 when tested according to UL 723; certified by an NRTL.

B. Two-Part Tape Sealing System:
1. Tape: Woven cotton fiber impregnated with mineral gypsum and modified acrylic/silicone activator to react exothermically with tape to form hard, durable, air-tight seal.
2. Tape Width: 3 inches.
3. Sealant: Modified styrene acrylic.
4. Water resistant.
5. Mold and mildew resistant.
6. Maximum Static-Pressure Class: 10-inch wg, positive and negative.
7. Service: Indoor and outdoor.
8. Service Temperature: Minus 40 to plus 200 deg F.
9. Substrate: Compatible with Aluminum (both PVC coated and bare), stainless steel, or aluminum.
10. Retain subparagraph below if low-emitting materials are required for LEED-NC Credit EQ 4.1.
11. For indoor applications, use sealant that has a VOC content of 250 g/L or less when calculated according to 40 CFR 59, Subpart D (EPA Method 24).

C. Water-Based Joint and Seam Sealant:
1. Application Method: Brush on.
2. Solids Content: Minimum 65 percent.
3. Shore A Hardness: Minimum 20.
4. Water resistant.
5. Mold and mildew resistant.
6. VOC: Maximum 75 g/L (less water).
7. Maximum Static-Pressure Class: 10-inch wg, positive and negative.
8. Service: Indoor or outdoor.
9. Substrate: Compatible with Aluminum (both PVC coated and bare), stainless steel, or aluminum sheets.

D. Flanged Joint Sealant: Comply with ASTM C 920.
1. General: Single-component, acid-curing, silicone, elastomeric.
2. Type: S.
3. Grade: NS.
4. Class: 25.
5. Use: O.
6. For indoor applications, use sealant that has a VOC content of 250 g/L or less when calculated according to 40 CFR 59, Subpart D (EPA Method 24).

E. Flange Gaskets: Butyl rubber, neoprene, or EPDM polymer with polyisobutylene plasticizer.

2.04 HANGERS AND SUPPORTS

A. Hanger Rods for Noncorrosive Environments: Cadmium-plated steel rods and nuts.

B. Strap and Rod Sizes: Comply with SMACNA's "HVAC Duct Construction Standards - Metal and Flexible," Table 4-1, "Rectangular Duct Hangers Minimum Size," and Table 4-2, "Minimum Hanger Sizes for Round Duct."

C. Steel Cables for Aluminum Ducts: Galvanized steel complying with ASTM A 603.

D. Steel Cable End Connections: Cadmium-plated steel assemblies with brackets, swivel, and bolts designed for duct hanger service; with an automatic-locking and clamping device.

E. Duct Attachments: Sheet metal screws, blind rivets, or self-tapping metal screws; compatible with duct materials.

F. Trapeze and Riser Supports:

1. Supports for Ducts: Galvanized-steel shapes and plates.

PART 3 PRODUCTS

3.01 DUCT INSTALLATION

A. Drawing plans, schematics, and diagrams indicate general location and arrangement of duct system. Indicated duct locations, configurations, and arrangements were used to size ducts and calculate friction loss for air-handling equipment sizing and for other design considerations. Install duct systems as indicated unless deviations to layout are approved on Shop Drawings and Coordination Drawings.

B. Install ducts according to SMACNA's "HVAC Duct Construction Standards - Metal and Flexible" unless otherwise indicated.

C. Install ducts with fewest possible joints.

D. Install factory- or shop-fabricated fittings for changes in direction, size, and shape and for branch connections.

E. Unless otherwise indicated, install ducts vertically and horizontally, and parallel and perpendicular to building lines.

F. Install ducts close to walls, overhead construction, columns, and other structural and permanent enclosure elements of building.

G. Install ducts with a clearance of 1 inch, plus allowance for insulation thickness.

H. Route ducts to avoid passing through transformer vaults and electrical equipment rooms and enclosures.

I. Where ducts pass through non-fire-rated interior partitions and exterior walls and are exposed to view, cover the opening between the partition and duct or duct insulation with sheet metal flanges of same metal thickness as the duct. Overlap openings on four sides by at least 1-1/2 inches.

J. Where ducts pass through fire-rated interior partitions and exterior walls, install fire dampers. Comply with requirements in Division 15 Section "Duct Accessories" for fire and smoke dampers.

K. Protect duct interiors from moisture, construction debris and dust, and other foreign materials. Comply with SMACNA's "Duct Cleanliness for New Construction Guidelines."

3.02 INSTALLATION OF EXPOSED DUCTWORK

A. Protect ducts exposed in finished spaces from being dented, scratched, or damaged.

B. Trim duct sealants flush with metal. Create a smooth and uniform exposed bead. Do not use two-part tape sealing system.

C. Grind welds to provide smooth surface free of burrs, sharp edges, and weld splatter. When welding stainless steel with a No. 3 or 4 finish, grind the welds flush, polish the exposed welds, and treat the welds to remove discoloration caused by welding.

D. Maintain consistency, symmetry, and uniformity in the arrangement and fabrication of fittings, hangers and supports, duct accessories, and air outlets.

E. Repair or replace damaged sections and finished work that does not comply with these requirements.

3.03 DUCT SEALING

A. Seal ducts for duct static-pressure, seal classes, and leakage classes specified in "Duct Schedule" Article according to SMACNA's "HVAC Duct Construction Standards - Metal and Flexible."

3.04 HANGER AND SUPPORT INSTALLATION

A. Comply with SMACNA's "HVAC Duct Construction Standards - Metal and Flexible," Chapter 4, "Hangers and Supports."

B. Building Attachments: Powder-actuated fasteners, or structural-steel fasteners appropriate for construction materials to which hangers are being attached.
   1. Install powder-actuated concrete fasteners after concrete is placed and completely cured.
   2. Use powder-actuated concrete fasteners for standard-weight aggregate concretes or for slabs more than 4 inches thick.
   3. Do not use powder-actuated concrete fasteners for lightweight-aggregate concretes or for slabs less than 4 inches thick.

C. Hanger Spacing: Comply with SMACNA's "HVAC Duct Construction Standards - Metal and Flexible," Table 4-1, "Rectangular Duct Hangers Minimum Size," for maximum hanger spacing; install hangers and supports within 24 inches of each elbow and within 48 inches of each branch intersection.

D. Hangers Exposed to View: Threaded rod and angle or channel supports.

E. Support vertical ducts with steel angles or channel secured to the sides of the duct with welds, bolts, sheet metal screws, or blind rivets; support at each floor and at a maximum intervals of 16 feet.

F. Install upper attachments to structures. Select and size upper attachments with pull-out, tension, and shear capacities appropriate for supported loads and building materials where used.

3.05 CONNECTIONS

A. Make connections to equipment with flexible connectors complying with Division 15 Section "Duct Accessories."

B. Comply with SMACNA's "HVAC Duct Construction Standards - Metal and Flexible" for branch, outlet and inlet, and terminal unit connections.

3.06 DUCT CLEANING

A. Clean new duct system(s) before testing, adjusting, and balancing.

B. Use service openings for entry and inspection.
   1. Create new openings and install access panels appropriate for duct static-pressure class if required for cleaning access. Provide insulated panels for insulated or lined duct. Patch insulation and liner as recommended by duct liner manufacturer. Comply with Division 15 Section "Duct Accessories" for access panels and doors.
   2. Disconnect and reconnect flexible ducts as needed for cleaning and inspection.
   3. Remove and reinstall ceiling to gain access during the cleaning process.

3.07 START UP

A. Air Balance: Comply with requirements in Division 15 Section "Testing, Adjusting, and Balancing."

3.08 DUCT SCHEDULE

A. Fabricate ducts.

B. Supply Ducts:
   1. Ducts Connected to Furnaces:
      a. Pressure Class: Positive 1-inch wg.
      b. Minimum SMACNA Seal Class: A.
      c. SMACNA Leakage Class for Rectangular: 24.
      d. SMACNA Leakage Class for Round and Flat Oval: 24.

C. Return Ducts:
   1. Ducts Connected to Air Handlers:
      a. Pressure Class: Positive or negative 1-inch wg.
      b. Minimum SMACNA Seal Class: A.
      c. SMACNA Leakage Class for Rectangular: 24.
      d. SMACNA Leakage Class for Round and Flat Oval: 24.

D. Exhaust Ducts:
   1. Ducts Connected to Fans Exhausting (ASHRAE 62.1, Class 1 and 2) Air:
      a. Pressure Class: Negative 1-inch wg.
      b. Minimum SMACNA Seal Class: A if negative pressure, and A if positive pressure.
      c. SMACNA Leakage Class for Rectangular: 12.

E. Outdoor-Air (Not Filtered, Heated, or Cooled) Ducts:
   1. Ducts Connected to Air Handlers:
      a. Pressure Class: Positive or negative 1-inch wg.
      b. Minimum SMACNA Seal Class: A.
      c. SMACNA Leakage Class for Rectangular: 12.
      d. SMACNA Leakage Class for Round and Flat Oval: 12.

F. Elbow Configuration:
   1. Rectangular Duct: Comply with SMACNA's "HVAC Duct Construction Standards - Metal and Flexible," Figure 2-2, "Rectangular Elbows."
      a. Velocity 1000 fpm or Lower:
         1) Radius Type RE 1 with minimum 0.5 radius-to-diameter ratio.
         2) Mitered Type RE 4 without vanes.
      b. Velocity 1000 to 1500 fpm:
         1) Radius Type RE 1 with minimum 1.0 radius-to-diameter ratio.
         2) Radius Type RE 3 with minimum 0.5 radius-to-diameter ratio and two vanes.
         3) Mitered Type RE 2 with vanes complying with SMACNA's "HVAC Duct Construction Standards - Metal and Flexible," Figure 2-3, "Vanes and Vane Runners," and Figure 2-4, "Vane Support in Elbows."
      c. Velocity 1500 fpm or Higher:
         1) Radius Type RE 1 with minimum 1.5 radius-to-diameter ratio.
         2) Radius Type RE 3 with minimum 1.0 radius-to-diameter ratio and two vanes.
         3) Mitered Type RE 2 with vanes complying with SMACNA's "HVAC Duct Construction Standards - Metal and Flexible," Figure 2-3, "Vanes and Vane Runners," and Figure 2-4, "Vane Support in Elbows."

2. Rectangular Duct: Comply with SMACNA's "HVAC Duct Construction Standards - Metal and Flexible," Figure 2-2, "Rectangular Elbows."
   a. Radius Type RE 1 with minimum 1.5 radius-to-diameter ratio.
   b. Radius Type RE 3 with minimum 1.0 radius-to-diameter ratio and two vanes.
   c. Mitered Type RE 2 with vanes complying with SMACNA's "HVAC Duct Construction Standards - Metal and Flexible," Figure 2-3, "Vanes and Vane Runners," and Figure 2-4, "Vane Support in Elbows."
   d. Round Elbows, 12 Inches and Smaller in Diameter: Stamped or pleated.
   e. Round Elbows, 14 Inches and Larger in Diameter: Standing seam or Welded.

G. Branch Configuration:
1. Rectangular Duct: Comply with SMACNA's "HVAC Duct Construction Standards - Metal and Flexible," Figure 2-6, "Branch Connections."
   a. Rectangular Main to Rectangular Branch: 45-degree entry.
   b. Rectangular Main to Round Branch: Spin in.

3.09 MEASUREMENT AND PAYMENT

Unless otherwise indicated, no separate measurement or payment for work performed under this Section. Include cost of same in Contract price bid for work of which this is a component part.

END OF SECTION

SECTION 15820

DUCT ACCESSORIES

PART 1 GENERAL

1.01 SUMMARY

A. Section includes:
1. Dampers and damper operators.
2. Diffusers, grilles, and registers.
3. Flexible duct connectors.
4. Other ductwork accessories.

1.02 RELATED REQUIREMENTS

A. Other related work as called for on PLANS or specified elsewhere in this or other TECHNICAL SPECIFICATION Sections.

1.03 REFERENCES

The publications listed below form a part of this Specification to the extent referenced. The publications are referred to in the text by basic designation only.

UNDERWRITERS LABORATORIES (UL)

UL 555/S Smoke Dampers

NATIONAL ELECTRICAL MANUFACTURERS ASSOCIATION (NEMA)

1.04 SUBMITTAL

A. Furnish in accordance with Specifications Section 01300, “Submittals”:
1. Product Data: For each type of product indicated.
2. Shop Drawings: For duct accessories. Include plans, elevations, sections, details and attachments to other work.
   a. Detail duct accessories fabrication and installation in ducts and other construction. Include dimensions, weights, loads, and required clearances; and method of field assembly into duct systems and other construction. Include the following:
      1) Special fittings.
      2) Control damper installations.
      3) Wiring Diagrams: For power, signal, and control wiring.
3. Operation and maintenance data.

1.05 QUALITY ASSURANCE

A. Comply with NFPA 90A, "Installation of Air Conditioning and Ventilating Systems," and with NFPA 90B, "Installation of Warm Air Heating and Air Conditioning Systems."

B. Comply with AMCA 500-D testing for damper rating.

PART 2 PRODUCTS

2.01 MATERIAL

A. Comply with SMACNA's "HVAC Duct Construction Standards - Metal and Flexible" for acceptable materials, material thicknesses, and duct construction methods unless otherwise indicated. Sheet metal materials shall be free of pitting, seam marks, roller marks, stains, discolorations, and other imperfections.

B. Comply with ASTM A 653/A 653M.
   1. Galvanized Coating Designation: G60.
   2. Exposed-Surface Finish: Mill phosphatized.

C. Reinforcement Shapes and Plates: Galvanized-steel reinforcement where installed on Aluminum ducts; compatible materials for aluminum and stainless-steel ducts.

D. Tie Rods: Galvanized steel, 1/4-inch minimum diameter for lengths 36 inches or less; 3/8-inch minimum diameter for lengths longer than 36 inches.

2.02 BACKDRAFT DAMPERS

A. Manufacturers: Subject to compliance with requirements, available manufacturers offering products that may be incorporated into the Work include, but are not limited to, the following:
   1. Air Balance Inc.; a division of Mestek, Inc.
   2. American Warming and Ventilating; a division of Mestek, Inc.
   3. Cesco Products; a division of Mestek, Inc.
   4. Duro Dyne Inc.
   5. Greenheck Fan Corporation.
   6. Lloyd Industries, Inc.
   7. Nailor Industries Inc.
   8. NCA Manufacturing, Inc.
   9. Pottorff; a division of PCI Industries, Inc.
   10. Ruskin Company.
   11. SEMCO Incorporated.
   12. Vent Products Company, Inc.

B. Description: Gravity balanced.

C. Maximum Air Velocity: 2000 fpm.

D. Maximum System Pressure: 1-inch wg.

E. Frame: 0.052-inch- thick, with welded corners and mounting flange if required,.

F. Blades: Multiple single-piece blades, center-pivoted, maximum 6-inch width, 0.025-inch-thick, roll-formed aluminum with sealed edges.

G. Blade Action: Parallel.

H. Blade Seals: Felt.

I. Blade Axles:
   1. Material: Galvanized steel.
   2. Diameter: 0.20 inch.

J. Tie Bars and Brackets: Galvanized steel.

K. Return Spring: Adjustable tension.

L. Bearings: Steel ball or synthetic pivot bushings.

M. Accessories:
1. Adjustment device to permit setting for varying differential static pressure.
2. Screen Mounting: Front mounted in sleeve.
   a. Sleeve Thickness: 20-gage minimum.
   b. Sleeve Length: 6 inches minimum.
3. Screen Mounting: Rear mounted.
4. Screen Material: Galvanized steel.
5. Screen Type: Insect.
6. 90-degree stops.

2.03 MANUAL VOLUME DAMPERS

A. Standard, Steel, Manual Volume Dampers:
1. Manufacturers: Subject to compliance with requirements, available manufacturers offering products that may be incorporated into the Work include, but are not limited to, the following:
   a. Air Balance Inc.; a division of Mestek, Inc.
   b. American Warming and Ventilating; a division of Mestek, Inc.
   c. Flexmaster U.S.A., Inc.
   d. McGill AirFlow LLC.
   e. METALAIRE, Inc.
   f. Nailor Industries Inc.
   g. Ruskin Company.
   h. Vent Products Company, Inc.
2. Standard leakage rating, with linkage outside airstream.
3. Suitable for horizontal or vertical applications.
4. Frames:
   a. Hat-shaped, galvanized-steel channels, 0.064-inch minimum thickness.
   b. Mitered and welded corners.
   c. Flanges for attaching to walls and flangeless frames for installing in ducts.
5. Blades:
   a. Multiple or single blade.
   b. Parallel- or opposed-blade design.
   c. Stiffen damper blades for stability.
   d. Galvanized-steel, 0.064 inch thick.
6. Blade Axles: Galvanized steel.
7. Bearings:
   a. Oil-impregnated bronze.
   b. Dampers in ducts with pressure classes of 3-inch wg or less shall have axles full length of damper blades and bearings at both ends of operating shaft.
8. Tie Bars and Brackets: Galvanized steel.

B. Jackshaft:
1. Size: 1-inch diameter.
2. Material: Galvanized-steel pipe rotating within pipe-bearing assembly mounted on supports at each mullion and at each end of multiple-damper assemblies.
3. Length and Number of Mountings: As required to connect linkage of each damper in multiple-damper assembly.

C. Damper Hardware:

1. Zinc-plated, die-cast core with dial and handle made of 3/32-inch- thick zinc-plated steel, and a 3/4-inch hexagon locking nut.
2. Include center hole to suit damper operating-rod size.
3. Include elevated platform for insulated duct mounting.

2.04 CONTROL DAMPERS

A. Manufacturers: Subject to compliance with requirements, available manufacturers offering products that may be incorporated into the Work include, but are not limited to, the following:
1. American Warming and Ventilating; a division of Mestek, Inc.
2. Arrow United Industries; a division of Mestek, Inc.
3. Cesco Products; a division of Mestek, Inc.
4. Duro Dyne Inc.
5. Flexmaster U.S.A., Inc.
6. Greenheck Fan Corporation.
7. Lloyd Industries, Inc.
8. M&I Air Systems Engineering; Division of M&I Heat Transfer Products Ltd.
9. McGill AirFlow LLC.
10. METALAIRE, Inc.
11. Metal Form Manufacturing, Inc.
12. Nailor Industries Inc.
13. NCA Manufacturing, Inc.
14. Ruskin Company.
15. Vent Products Company, Inc.
16. Young Regulator Company.

B. Frames:
1. Hat shaped.
2. Galvanized-steel channels, 0.064 inch thick.
3. Mitered and welded corners.

C. Blades:
1. Multiple blade with maximum blade width of 8 inches.
2. Parallel- and opposed-blade design.
3. Galvanized steel.
4. 0.064 inch thick.
5. Blade Edging: Closed-cell neoprene edging.
6. Blade Edging: Inflatable seal blade edging, or replaceable rubber seals.

D. Blade Axles: 1/2-inch- diameter; galvanized steel; blade-linkage hardware of zinc-plated steel and brass; ends sealed against blade bearings.
1. Operating Temperature Range: From minus 40 to plus 200 deg F.

E. Bearings:
1. Oil-impregnated bronze.
2. Dampers in ducts with pressure classes of 3-inch wg or less shall have axles full length of damper blades and bearings at both ends of operating shaft.

1. Thrust bearings at each end of every blade.

2.05 TURNING VANES

A. Manufacturers: Subject to compliance with requirements, available manufacturers offering products that may be incorporated into the Work include, but are not limited to, the following:
1. Ductmate Industries, Inc.
2. Duro Dyne Inc.

3. METALAIRE, Inc.
4. SEMCO Incorporated.
5. Ward Industries, Inc.; a division of Hart & Cooley, Inc.

B. Manufactured Turning Vanes for Aluminum Ducts: Curved blades of aluminum; support with bars perpendicular to blades set; set into vane runners suitable for duct mounting.
1. Acoustic Turning Vanes: Fabricate airfoil-shaped aluminum extrusions with perforated faces and fibrous-glass fill.

C. General Requirements: Comply with SMACNA's "HVAC Duct Construction Standards - Metal and Flexible"; Figures 2-3, "Vanes and Vane Runners," and 2-4, "Vane Support in Elbows."

D. Vane Construction: Double wall.

2.06 DUCT-MOUNTED ACCESS DOORS

A. Manufacturers: Subject to compliance with requirements, available manufacturers offering products that may be incorporated into the Work include, but are not limited to, the following:
1. American Warming and Ventilating; a division of Mestek, Inc.
2. Ductmate Industries, Inc.
3. Flexmaster U.S.A., Inc.
4. Greenheck Fan Corporation.
5. McGill AirFlow LLC.
6. Nailor Industries Inc.
7. Ventfabrics, Inc.
8. Ward Industries, Inc.; a division of Hart & Cooley, Inc.

B. Duct-Mounted Access Doors: Fabricate access panels according to SMACNA's "HVAC Duct Construction Standards - Metal and Flexible"; Figures 2-10, "Duct Access Doors and Panels," and 2-11, "Access Panels - Round Duct."
1. Door:
a. Double wall, rectangular.
b. Aluminum with insulation fill and thickness as indicated for duct pressure class.
c. Vision panel.
d. Hinges and Latches: 1-by-1-inch butt or piano hinge and cam latches.
e. Fabricate doors airtight and suitable for duct pressure class.
f. Frame: Galvanized sheet steel, with bend-over tabs and foam gaskets.
g. Number of Hinges and Locks:
h. Access Doors Less Than 12 Inches Square: No hinges and two sash locks.
i. Access Doors up to 18 Inches Square: Two hinges and two sash locks.

2.07 FLEXIBLE CONNECTORS

A. Manufacturers: Subject to compliance with requirements, available manufacturers offering products that may be incorporated into the Work include, but are not limited to, the following:
1. Ductmate Industries, Inc.
2. Duro Dyne Inc.
3. Ventfabrics, Inc.
4. Ward Industries, Inc.; a division of Hart & Cooley, Inc.

B. Materials: Flame-retardant or noncombustible fabrics.

C. Coatings and Adhesives: Comply with UL 181, Class 1.

D. Metal-Edged Connectors: Factory fabricated with a fabric strip 3-1/2 inches wide attached to 2 strips of 2-3/4-inch- wide, 0.028-inch- thick, 0.032-inch- thick aluminum sheets. Provide metal compatible with connected ducts.

E. Indoor System, Flexible Connector Fabric: Glass fabric double coated with neoprene.
1. Minimum Weight: 26 oz./sq. yd..
2. Tensile Strength: 480 lbf/inch in the warp and 360 lbf/inch in the filling.
3. Service Temperature: Minus 40 to plus 200 deg F.

2.08 FLEXIBLE DUCTS

A. Manufacturers: Subject to compliance with requirements, available manufacturers offering products that may be incorporated into the Work include, but are not limited to, the following:
1. Flexmaster U.S.A., Inc.
2. McGill AirFlow LLC.
3. Ward Industries, Inc.; a division of Hart & Cooley, Inc.

B. Insulated, Flexible Duct: UL 181, Class 1, 2-ply vinyl film supported by helically wound, spring-steel wire; fibrous-glass insulation; polyethylene or aluminized vapor-barrier film.
1. Pressure Rating: 10-inch wg positive and 1.0-inch wg negative.
2. Maximum Air Velocity: 4000 fpm.
3. Temperature Range: Minus 10 to plus 160 deg F.
4. Insulation R-value: Comply with ASHRAE/IESNA 90.1-2004.

C. Insulated, Flexible Duct: UL 181, Class 1, multiple layers of aluminum laminate supported by helically wound, spring-steel wire; fibrous-glass insulation; polyethylene or aluminized vapor-barrier film.
1. Pressure Rating: 10-inch wg positive and 1.0-inch wg negative.
2. Maximum Air Velocity: 4000 fpm.
3. Temperature Range: Minus 20 to plus 210 deg F.
4. Insulation R-value: Comply with ASHRAE/IESNA 90.1-2004.

D. Flexible Duct Connectors:
1. Clamps: Stainless-steel band with cadmium-plated hex screw to tighten band with a worm-gear action in sizes 3 through 18 inches, to suit duct size.

2.09 DUCT ACCESSORY HARDWARE

A. Instrument Test Holes: Cast iron, including screw cap and gasket. Size to allow insertion of pitot tube and other testing instruments and of length to suit duct-insulation thickness.

B. Adhesives: High strength, quick setting, neoprene based, waterproof, and resistant to gasoline and grease.

PART 3 EXECUTION

3.01 INSTALLATION

A. Install duct accessories according to applicable details in SMACNA's "HVAC Duct Construction Standards - Metal and Flexible" for metal ducts and in NAIMA AH116, "Fibrous Glass Duct Construction Standards," for fibrous-glass ducts.

B. Install duct accessories of materials suited to duct materials; use aluminum accessories in aluminum ducts.

C. Install backdraft dampers at inlet of exhaust fans or exhaust ducts as close as possible to exhaust fan unless otherwise indicated.

D. Install volume dampers at points on supply, return, and exhaust systems where branches extend from larger ducts. Install volume dampers where required by the Test and Balance Contractor for systems air balance.
   1. Install steel volume dampers in steel ducts.

E. Set dampers to fully open position before testing, adjusting, and balancing.

F. Install test holes at fan inlets and outlets and elsewhere as indicated.

G. Install fire and smoke dampers according to UL listing.

H. Install duct access doors on sides of ducts to allow for inspecting, adjusting, and maintaining accessories and equipment at the following locations:
   1. Downstream from manual volume dampers, control dampers, backdraft dampers, and equipment.
   2. Adjacent to and close enough to fire or smoke dampers, to reset or reinstall fusible links. Access doors for access to fire or smoke dampers having fusible links shall be pressure relief access doors; and shall be outward operation for access doors installed upstream from dampers and inward operation for access doors installed downstream from dampers.

I. Elsewhere as indicated.

J. Install access doors with swing against duct static pressure.

K. Access Door Sizes:
   1. One-Hand or Inspection Access: 8 by 5 inches.
   2. Two-Hand Access: 12 by 6 inches.
   3. Head and Hand Access: 18 by 10 inches.
   4. Head and Shoulders Access: 21 by 14 inches.

L. Install flexible connectors to connect ducts to equipment.

M. Connect diffuser to ducts with maximum 60-inch lengths of flexible duct clamped in place.

N. Connect flexible ducts to metal ducts with duct connector clamps.

O. Install duct test holes where required for testing and balancing purposes.

3.02 FIELD QUALITY CONTROL

A. Tests and Inspections:
   1. Operate dampers to verify full range of movement.
   2. Inspect locations of access doors and verify that purpose of access door can be performed.
   3. Operate fire and smoke dampers to verify full range of movement and verify that proper heat-response device is installed.
   4. Inspect turning vanes for proper and secure installation.

3.03 MEASUREMENT AND PAYMENT

No separate measurement or payment for work performed under this Section. Include cost of same in Contract price bid for work of which this is a component part.

END OF SECTION

SECTION 15860

FANS

PART 1 - GENERAL

1.01 SUMMARY

Furnish and install fans and accessories as shown on PLANS and specified herein.

1.02 RELATED REQUIREMENTS

A. PLANS show general arrangement, location, and basic dimensions.

B. Other related work as called for on PLANS or specified elsewhere in this or other Technical Specification Sections.

1.03 REFERENCES

The publications listed below form a part of this Specification to the extent referenced. The publications are referred to in the text by basic designation only.

AIR MOVEMENT AND CONTROL ASSOCIATION, INC. (AMCA)

AMCA 210	Laboratory Methods of Testing Fans for Rating Purposes
AMCA 300	Test Code for Sound Rating Air Moving Devices
AMCA 301	Method of Calculating Fan Sound Ratings from Laboratory Test Data

AMERICAN BEARING MANUFACTURERS ASSOCIATION (ABMA)

ABMA 9	Standard for Load Ratings and Fatigue Life for Ball Bearings
ABMA 11	Load Ratings and Fatigue Life for Roller Bearings

AMERICAN SOCIETY FOR TESTING AND MATERIALS (ASTM)

ASTM D4167	Standard Specification for Fiber-Reinforced Plastic Fans and Blowers

NATIONAL FIRE PROTECTION ASSOCIATION (NFPA)

NFPA 70	National Electric Code

SHEET METAL & AIR CONDITIONING CONTRACTORS NATIONAL ASSOCIATION, INC. (SMACNA)

HVAC Duct Construction Standards - Metal and Flexible

UNDERWRITERS LABORATORIES (UL)

UL 705	Power Ventilators

1.04 - 1.05 (NOT USED)

1.06 SUBMITTALS

A. Furnish the following in accordance with Specification Section 01300, “Submittals” and Section 01730, “Operation and Maintenance Data”.

1. Shop Drawings: In addition to the items specified in Section 01300, “Submittals”, furnish the following:
   a. Product data for selected models, including specialties, accessories, and the following:
      1) Fan performance curves with specified operating point clearly plotted.
      2) Sound power levels for both fan inlet and outlet at rated capacity.
      3) Motor ratings and electrical characteristics plus motor and fan accessories.
      4) Materials gages and finishes, including color charts.
      5) Dampers, including housings, linkages, and operators.
   b. Drawings detailing equipment assemblies and indicating dimensions, weights, required clearances, components, and location and size of field connections.
   c. Coordination drawings for roof penetration requirements, and reflected ceiling plans, drawn accurately to scale and coordinating penetrations and units mounted above ceiling. Show the following:
      1) Roof framing and support members relative to duct penetrations.
      2) Ceiling suspension members.
      3) Method of attaching hangers to building structure.
      4) Size and location of initial access modules for acoustical tile.
   d. Wiring diagrams that detail power, signal, and control wiring. Differentiate between manufacturer-installed wiring and field-installed wiring.
2. Operation and Maintenance Manuals.
3. Furnish certified report prepared by manufacturer’s technical representative certifying satisfactory installation, operation and in-service placement of units.

1.07 QUALITY ASSURANCE

A. UL Compliance: Fans to be designed, manufactured, and tested in accordance with UL 705 “Power Ventilators”. Fans and components to be UL listed and labeled.

B. Nationally Recognized Testing Laboratory and NEMA Compliance (NRTL): Fans and components are to be NRTL listed and labeled. The term “NRTL” to be as defined in OSHA Regulation 1910.7.

C. NEMA Compliance: Motors and electrical accessories to comply with NEMA standards.

D. Electrical Component Standard: Components and installation to comply with NFPA 70 “National Electrical Code”.

1.08 DELIVERY, STORAGE AND HANDLING

A. Deliver, in manufacturer’s original unopened packaging with brand name clearly marked and showing, to jobsite with sufficient protection, bracing, etc. to ensure arrival in acceptable and undamaged condition.

B. Lift and support units with the manufacturer’s designated lifting or supporting points.

C. Store in original containers on level supports and protect materials from damage and exposure to the elements until installed. Do not keep in storage for over 90 days.

1.09 PROJECT/SITE CONDITIONS (NOT USED)

1.10 SEQUENCING

A. Coordinate the installation of roof curbs, equipment supports, and roof penetrations as specified and required for complete installation.

B. Coordinate the size and location of structural steel support members.

PART 2 - PRODUCTS

2.01 ACCEPTABLE MANUFACTURERS

A. Subject to compliance with the requirements of this Section, the following manufacturers have the capability of performing the work in this Section:
   1. Greenheck Fan Corporation.
   2. Hartzel.

2.02 MATERIALS AND/OR EQUIPMENT

A. General:
   1. Provide fans that are factory-fabricated and assembled, factory-tested, and factory-finished, with indicated capacities and characteristics.
   2. Nameplate: Each fan to be furnished with a permanently affixed SS nameplate with manufacturer's name, model number, serial number and electrical data.
   3. Rotating Assembly: Statically and dynamically balanced and designed for continuous operation at the maximum rated fan speed and motor horsepower.
   4. Mounting: The entire fan and motor assembly to be mounted on vibration isolators to reduce noise transmission.
   5. All fans are to carry AMCA seals for sound and air performance.
   6. Bearings: Ball or roller type mounted in cast iron pillow blocks with grease fittings. Life as specified in accordance with ABMA Standard 9 for ball bearings and ABMA Standard 11 for roller bearings.
   7. Shafts: Precision turned, ground and polished steel sized so that the first critical speed is at least 25 percent over the maximum operating speed.

B. Propeller Fans:
   1. Propeller: Cast aluminum blades and hub.
   2. Bearings: Minimum (L10) life in excess of 100,000 hours at maximum cataloged operating speeds.
   3. Drive Frame: Formed channels, galvanized.
   4. Panel Assembly: Deep formed inlet venture, galvanized.
   5. Typical Make and Model:
      a. Sidewall Supply or Exhaust: Greenheck Model SBC or equal.

C. Roof and Sidewall Exhaust Fans:
   1. Type: Belt driven centrifugal exhaust fans.
      a. Roof mounted exhaust
      b. Roof mounted upblast exhaust
      c. Sidewall mounted exhaust.
   2. Wheel: Centrifugal backward inclined, constructed of aluminum and to include a wheel cone carefully matched to the inlet cone for precise running tolerances.
   3. Housing: Heavy gauge aluminum with a rigid internal support structure. The fan shroud to have a rolled bead for added strength.
   4. Bearings:
      a. Sidewall Exhaust: Minimum (L_{10}) life in excess of 100,000 hours at maximum cataloged operating speeds.
   5. Typical Make and Model:

a. Sidewall Exhaust: Greenheck Model CWB

D. Motors:
1. Type: Heavy-duty ball bearing type, carefully matched to the fan load.
2. Torque Characteristics: Sufficient to accelerate the driven loads satisfactorily.
3. Motor Sizes: Minimum sizes and electrical characteristics as indicated. Motor to be large enough so that the driven load will not require the motor to operate in the service factor range.
4. Enclosure: TEFC or TENV per manufacturer's recommendation.
5. Space Heaters: None required.
6. Temperature Rating: 50°C maximum temperature rise at 40°C ambient for continuous duty at full load.
7. Motor and drive to be mounted on vibration isolators, out of the airstream.
8. Fresh air for motor cooling to be drawn into the motor compartment from an area free from discharge contaminants.
9. Motors to be easily accessible for maintenance.
10. Motors to be high efficiency (90% or better) and high power factor design.

E. Belt Drives:
1. Factory mounted, with final alignment and belt adjustment made after installation. Belt drive components to be sized based on a service factor of 1.4.
2. Pulleys to be of the fully machined cast iron type, keyed and securely attached to the wheel and motor shafts. Motor pulleys to be adjustable for final balancing.
3. Belt Guards: Provide corrosion resistant belt guards for motors mounted on the outside of the fan cabinet.
4. Belts: Oil-resistant, nonsparking, and nonstatic.
5. Furnish one additional complete set of belts for each belt-driven fan.

F. Accessories:
1. Bird Screens: Removable, 1/2-inch mesh, 16-gage aluminum or brass wire.
2. Dampers:
   a. Backdraft Dampers: Counterbalanced, parallel-blade type dampers mounted in curb base, factory set to close when fan stops.
   b. Butterfly Dampers: Butterfly type discharge dampers.
      1) Blades: Die-formed sheet steel.
      2) Frame: Extruded aluminum, with waterproof, felt blade bumpers, magnetic catch.
      3) Linkage: Nonferrous metals.
3. Roof Curbs: Prefabricated, heavy-gage, galvanized steel; mitered and welded corners; 2-inch-thick, rigid fiberglass insulation adhered to inside walls; built-in cant and mounting flange for flat roof deck; and 2-inch wood nailer. Size as required to suit roof opening and fan base. Overall Height: 12 inches.
4. Filters: Permanent washable 2-inch aluminum filters to be provided on all supply fans when indicated.
5. Hoods: Louvered penthouses constructed of heavy gauge extruded aluminum louvers with mitered corners. Hoods to include insulated, hinged aluminum covers. Base panels to have pre-punched mounting holes.
6. Electrical:
   a. Disconnect: NEMA 4X S.S., nonfusible type, with thermal overload protection mounted external to fan housing, factory-wired through an internal aluminum conduit.
   b. Wiring Terminations: Provide terminal lugs to match branch circuit conductor quantities, sizes, and materials indicated. Enclose terminal lugs in terminal box sized to NFPA 70.
   c. Starters, Electrical Devices, and Wiring: Specified elsewhere.

2.03 FABRICATION (NOT USED)

2.04 SOURCE QUALITY CONTROL

A. Testing Requirements: The following factory tests are required on a prototype:
   1. Sound Power Level Ratings: Comply with AMCA Standard 301 “Method for Calculating Fan Sound Ratings From Laboratory Test Data”. Test fans in accordance with AMCA Standard 300 “Test Code for Sound Rating”. Fans to be licensed to bear the AMCA Certified Sound Ratings Seal.
   2. Fan Performance Ratings: Establish flow rate, pressure, power, air density, speed of rotation, and efficiency by factory tests and ratings in accordance with AMCA Standard 210/ASHRAE Standard 51 - Laboratory Methods of Testing Fans for Rating.

PART 3 - EXECUTION

3.01 GENERAL

A. Examine areas and conditions for compliance with requirements for installation tolerances, and other conditions affecting performance of fans.

B. Do not proceed until unsatisfactory conditions have been corrected.

C. Install fans level and plumb, in accordance with manufacturer’s written instructions. Support units as described below, using the vibration control devices indicated. Secure roof-mounted fans to roof curbs with stainless steel hardware.

D. Arrange installation of units to provide access space around ventilation fans for service and maintenance.

E. Duct installations and connections are specified elsewhere. Make final duct connections with flexible connections.

F. Electrical Connections: The following requirements apply:
   1. Electrical power wiring is specified in electrical Sections.
   2. Temperature control wiring and interlock wiring are to be as specified.
   3. Grounding: Connect unit components to ground in accordance with the National Electrical Code.

3.02 PREPARATION (NOT USED)

3.03 INSTALLATION

A. Install fans in accordance with manufacturer’s instructions.

B. Install fans as indicated, with resilient mountings and flexible electrical leads.

3.04 REPAIR/RESTORATION (NOT USED)

3.05 FIELD QUALITY CONTROL

A. Manufacturer’s Services
   1. Furnish services and training required in Section 01445, “Manufacturers Field Services”.

B. Final Checks Before Start-Up: Perform the following operations and checks before start-up:
   1. Remove shipping blocking and bracing.

2. Verify unit is secure on mountings and supporting devices and that connections for ductwork, and electrical are complete. Verify proper thermal overload protection is installed in motors, starters, and disconnects.
3. Perform cleaning and adjusting specified in this Section.
4. Disconnect fan drive from motor, verify proper motor rotation direction, and verify fan wheel free rotation and smooth bearings operations. Reconnect fan drive system, align belts, and install belt guards.
5. Lubricate bearings, pulleys, belts, and other moving parts with factory-recommended lubricants.
6. Verify manual and automatic volume control and that fire and smoke dampers in connected ductwork systems are in the full-open position.
7. Disable automatic temperature control operators.

C. Starting Procedures for Fans:
1. Energize motor; verify proper operation of motor, drive system, and fan wheel. Adjust fan to indicated RPM.
2. Measure and record motor electrical values for voltage and amperage.

D. Refer to other Specification Sections for procedures for ventilation fan system testing, adjusting, and balancing.

3.06 ADJUSTING

A. Adjust damper linkages for proper damper operation.

3.07 CLEANING

A. Clean unit cabinet interiors to remove foreign material and construction dirt and dust. Vacuum clean fan wheel and cabinet.

3.08 DEMONSTRATION

A. Demonstration Services: Provide for a factory-authorized service representative to train OWNER's maintenance personnel on the following:
1. Procedures and schedules related to start-up and shutdown, troubleshooting, servicing, preventative maintenance, and how to obtain replacement parts.
2. Familiarization with contents of Operating and Maintenance Manuals specified elsewhere.

3.09 - 3.10 (NOT USED)

3.11 MEASUREMENT AND PAYMENT

No separate measurement or payment for work performed under this Section. Include cost of same in Contract price for work of which this is a component part.

END OF SECTION

SECTION 16150

RACEWAYS, FITTINGS, AND SUPPORTS

PART 1 - GENERAL

1.01 DESCRIPTION AND SCOPE OF WORK

A. This section specifies raceways, fittings, and supports for all cables, conductors and electrical equipment. The Contractor shall furnish and install complete raceway systems in accordance with the following specifications.

1.02 RELATED REQUIREMENTS

A. Related work as called for on the PLANS, as specified herein or in other Sections of the Specifications.

1.03 REFERENCES

A. This section contains references to the following codes and standards. They are a part of this section as specified. In case of conflict between the requirements of this section and the listed standards, the requirements of this section shall prevail. All raceways, fitting and supports are to be U.L. listed and certified and shall conform to ANSI standards.

Code	Title
NFPA 70-2011	National Electrical Code (NEC)
NEMA 250-85	Enclosures for Electrical Equipment (1,000 volts maximum)
ANSI C80.5	Rigid Aluminum Conduit and Rigid Galvanized Steel Conduit.
ANSI/UL 360	Liquidtight Flexible Steel Conduit
ANSI/NEMA FB1	Fittings and Supports for Conduit and Cable Assemblies
NEMA TC-2	Polyvinyl Chloride (PVC) Tubing and Conduit
NEMA TC-3	Polyvinyl Chloride (PVC) Fittings for Use with Rigid PVC Conduit and Tubing

1.04 SUBMITTALS

A. The Contractor shall submit manufacturer's catalog data for all material provided under this section and in accordance with the requirements of Section 01300 of the Contract Specifications.

1. Submit manufacturer’s catalog data certifying Rigid Aluminum Conduits and Aluminum Conduit Fittings and Supports, as specified within this section, to be 99.0% copper-free.

2. Material Safety Data sheets for all sealants, solvents, etc.

1.05 SPECIAL CONDITIONS

A. All Raceways, Fittings, and Supports of a common type shall be the product of a single manufacturer.

PART 2 - PRODUCT

2.01 EXPOSED CONDUIT SYSTEM INDOOR, AND EXPOSED-OUTDOOR ABOVE GROUND LEVEL

A. Rigid Metal Conduit System

1. Conduit run above ground shall be U.L. listed 99.0% copper free rigid aluminum in all areas.

2. Rigid Aluminum Conduit shall meet the requirements of ANSI C80.5 and U.L.6. Rigid Aluminum Conduit Material to be 99.0% copper-free rigid aluminum. Conduit pipe straps and clamps shall be 316-Stainless Steel. All hardware, bolts, nuts, etc. shall be 316 Stainless Steel. Furnish factory long radius of curvature bends for changes in direction for all conduits. Additionally, 90-degree factory bends of conduit sizes equal to or greater than 4-inches in diameter, shall have a minimum bending radius of 48-inches. Also, all 90-degree, 45-degree, and 30-degree conduit bends shall be factory made bends. Conduit shall be as manufactured by VAW of America Inc., or approved equal.

3. Minimum conduit size for all work shall be 3/4”

B. Conduit Hubs

Conduit hubs shall be the grounding type, 99.0% copper-free aluminum (body, nipples, etc.), with integral insulated throat, and with solderless grounding lugs as manufactured by “Myers”, or approved equal. Conduit hubs shall be furnished complete with rubber gasket.

C. Grounding Bushings

Conduit grounding bushing shall be 99.0% copper-free aluminum (body, nipples, etc.), with integral insulated throat, fully threaded, and with solderless grounding lugs as manufactured by “0.Z. Gedney” type ABLG with specified options, or approved equal. Bushings that are not fully threaded shall not be accepted.

D. Conduit Bodies

All conduit bodies shall be 99.0% copper-free aluminum. Conduit body covers shall be 99.0% copper-free aluminum. Conduit body covers shall be of the bolt-on type and shall have 316-Stainless Steel screws/hardware. Conduit body covers shall be furnished complete with a neoprene gasket. Conduit bodies shall be manufactured by **"**Crouse-Hinds" Form-7, or approved equal.

E. Conduit Unions

Conduit unions shall be threaded, 99.0% copper-free aluminum. Conduit unions shall be manufactured by "Crouse-Hinds" type UNF or UNY, or approved equal by "Appleton" or "0.Z. Gedney".

F. Conduit Reducers

Conduit reducers shall be threaded, 99.0% copper-free aluminum. Conduit reducers shall be manufactured by "Crouse-Hinds" type RE and type REA, or approved equal.

G. Sealing Fittings

1. Conduit seals shall be suitable for use in Class-I, Groups B, C, and D, and Class-II Group F and G. Conduit seals shall also meet or exceed the following minimum requirements:

   a. Seal body, nipples and closures: 99.0% copper-free aluminum

   b. Closures to take drain: 99.0% copper-free aluminum

   c. Drain: Stainless steel

   d. Removable Nipples: 99.0% copper-free aluminum

2. Conduit seals shall be manufactured by "Crouse-Hinds" type EYD drain seals with specified options, or approved equal. Utilize conduit Sealing Hub only where called for on the PLANS. Sealing Hub shall be 99.0% copper-free aluminum and shall be suitable for use in Class-I, Groups B, C, and D, and Class-II Group F and G. Sealing Hub shall be as manufactured by Crouse-Hinds type ES, or approved equal.

3. Install Sealing-Compound to seal around each conductor, between conductors, and between the conduit seal and the associated conduit body. The sealing compound shall create a dam and block the migration of gases, water, etc. into the conduit system and conduit bodies.

   a. Where conduit seals are installed in compliance with NEC Class-I and Class-II requirements, the sealing compound shall be as manufactured by "Crouse-Hinds" type Chico A-P, or approved equal.

   b. Where conduit seals are not required for NEC Class-I and Class-II installations but are shown to be installed on the PLANS to block the migration of corrosive gases into the conduit system and conduit bodies, the conduit seals Sealing Compound shall be as manufactured by "3M" type Scotchcast Reenterable Electrical Insulating Resin 2123, or approved equal.

   c. In vertical applications, install a fiber dam inside conduit/conduit seal prior to installation of sealing compound. Fiber dam shall be of mineral wool material that packs easily, forming a barrier around the conductors inside the conduit.

Fiber dam material shall be as manufactured by "Crouse-Hinds" type Chico X, or approved equal.

4. Use conduit seals on conduits as shown on the PLANS.

H. Expansion Fittings

Conduit expansion fittings shall be 99.0% copper-free aluminum equipped with oversized sleeve and insulated bushing. Furnished expansion fittings with tinned copper braided bonding jumper. Conduit expansion fittings shall be manufactured by O.Z./Gedney Type EXPB-A, or approved equal.

I. Cord and Cable Fittings

Cord and cable fittings shall be threaded gland nut type with 99.0% copper-free aluminum straight threaded body and a neoprene sealing cable bushing. Furnish complete with manufacturer's full stainless steel wire mesh grip. Cord and cable fittings, complete with all specified accessories shall be manufactured by "Crouse-Hinds" type CGB, or approved equal. Cord and cable fittings shall be used only where specifically shown on the PLANS.

2.02 LIQUID TIGHT FLEXIBLE CONDUIT

A. Sizes:- Greater than or equal to ¾" and smaller than or equal to 2" Flexible Conduit:

1. Liquid tight flexible conduit of trade size range from ¾" to 2" shall be non-metallic type liquid tight conduit, formed from PVC plastic, accepting metallic or nonmetallic liquid tight fittings, and suitable for installation in temperature range between -20º C to + 60º C (suitable for use outdoors and indoors). Liquid Tight flexible conduit shall be as manufactured by ELECTRI-FLEX series NM type B-PVC, or approved equal.

2. Liquid tight flexible conduit fittings for conduit sizes that are Greater than or equal to ¾" and smaller than or equal to 2" shall be non-metallic PVC fittings, as manufactured by CARFLEX, or approved equal.

B. Sizes:- Greater than 2" Flexible Conduit:

1. Liquid tight flexible conduit of trade size greater than 2" shall be PVC-COATED metallic liquid tight conduit, formed from PVC plastic, accepting metallic liquid tight fittings, and suitable for installation in temperature range between -20º C to + 60º C (suitable for use outdoors and indoors). Liquid Tight flexible conduit shall be as manufactured by SEALTITE, or approved equal.

2. Liquid tight flexible conduit fittings for conduit sizes that are Greater than 2" shall be 99.9% Copper-Free-Aluminum, as manufactured by Appleton, Crouse-Hinds, or approved equal.

C. Liquid tight flexible conduit shall be used for connections to motors, field instruments, etc., and any equipment subject to vibration, and where shown on the PLANS. Length of conduit shall not exceed 30-inches, unless otherwise shown/noted on the PLANS.

D. Minimum liquid-tight flexible conduit size for all work shall be ¾-inch unless otherwise shown/noted on the PLANS.

1. Exception: Where field instrument enclosures are fitted with ½-inch NPT threaded conduit hub(s), ½-inch liquid-tight flexible conduit shall be permitted for the final conduit connection to the instrument. The transition to ½-inch liquid-tight flexible conduit shall be implemented by installing a pull box or conduit body and conduit reducer at the point of transition.

2.03 MISCELLANEOUS

A. Fire-retardant and waterproof conduit/duct sealant: Sealant shall be designed to seal against the spread of fire, smoke, gases and water. Sealant shall be manufactured by Nelson Firestop, type CLK Silicone Sealant or type LBS3 Intumescent Sealant, as applicable, or approved equal.

B. Pipe Tape: Pipe tape shall be 20 mil, polyvinyl chloride based tape, having dielectric breakdown voltage rating of 20,000 volts and normal service temperature range of -55°F to 175°F. Pipe tape shall be manufactured by 3M Company No.51, or approved equal.

C. Conduit Sleeves: Conduit sleeves shall be schedule 80 PVC, heavy wall, U.L. rated, No. 651, conforming to NEMA standard TC-2-75 and listed in conformity with Article 347 of the National Electrical Code (NEC). Also refer to the conduit penetration details shown on the PLANS.

D. Conduit Hole Seals: Hole seals shall be stainless steel, U.L. listed as NEMA 4X oil-tight, complete with oil-resistant gasketing, backplate, stud and wing nut. Hole seals shall be manufactured by Hoffman, Rittal, Cooper B-Line, or approved equal.

E. Conduit Plugs: Conduit plugs shall be threaded insert plugs constructed of 99.0% copper-free aluminum or type 316 stainless steel. Conduit plugs shall be type CUP by Hubbell-Killark, type PLG by Crouse-Hinds or O-Z/Gedney, Counter-Sunk Hex Plugs by Calbrite, or approved equal.

2.04 ELECTRICAL EQUIPMENT AND RACEWAY SUPPORT CHANNELS

A. Electrical equipment and raceway system support channels shall be fabricated with Type 316-Stainless Steel material in all areas except within the CHEMICAL BUILDING FIRST FLOOR process areas. All Type 316-Stainless Steel support channels shall be manufactured by “Unistrut Corporation” series P1000ST and P1001ST, or approved equal.
   1. All support channel fittings, post bases, conduit clamps, etc. shall be fabricated with Type 316 stainless steel, as manufactured by “Unistrut Corporation”, or approved equal.

B. Electrical equipment and raceway system support channels installed within the CHEMICAL BUILDING FIRST FLOOR process areas shall be fabricated with ASTM B221 (Type 6063-T6) Aluminum. All Aluminum support channels shall be manufactured by “Unistrut Corporation” series P1000EA and P1001EA, or approved equal.
   1. All support channel fittings, post bases, conduit clamps, etc. shall be fabricated with ASTM B209 (Type 1100F or Type 5052-H32) Aluminum, as manufactured by “Unistrut Corporation”, or approved equal.

C. All fastening hardware, beam clamps, channel nuts, threaded rod, etc. shall be fabricated with Type 316 stainless steel, as manufactured by “Unistrut Corporation”, or approved equal.
   1. Beam clamps shall be part number P2785ST or P2786ST, or approved equal.

D. Expansion anchors shall be fabricated with Type 316-Stainless Steel and shall be installed per the manufacturer's recommendations.

PART 3 - EXECUTION

3.01 GENERAL

A. Install electrical equipment and conduit raceway system in accordance with the recommendations of the manufacturer, the requirements of the National Electrical Code, and the PLANS.

3.02 CONDUIT SYSTEM

A. Rigid conduit joints shall be cut square, threaded, reamed smooth and drawn up tight. Field offsets or bends (bends that are not 90-degree/ 45-degree/ 30-degree bends) shall not be made with standard conduit ells. Make field bends or offsets with an approved bender or hickey or hub type conduit fittings. Conduit shall contain no more than the equivalent of three (3) 90 degree bends between outlets or fittings.

B. Run exposed conduit parallel or at right angles to building lines.

C. Run conduits continuous from outlet to outlet and from outlets to cabinets, pull or junction boxes. For outdoor and indoor surface mounted installations, secure conduits to cabinets and boxes with gasketed, grounding type conduit hubs in such a manner that each system is electrically continuous throughout.

D. Install all conduits as a complete system before wiring is pulled in. Conduits shall be reamed and swabbed clean immediately before wiring is pulled in.

E. Cap conduits during construction to prevent entrance of dirt, trash, and water.

F. Furnish and install an expansion fitting for each conduit across structural expansion joints. Coordinate locations of expansion joints with the PLANS. Conduit expansion fittings shall be constructed of material equivalent to the conduit system in which they are installed.

G. Conduit nipples shall be 99.0% copper-free aluminum. Conduit nipples shall have two independent sets of threads. Running threads shall not be used. Where conditions require joining two fixed conduits into a continuous run, a conduit union shall be used.

H. Coat all conduit threads with Penetrox or Noalox oxide inhibiting compound prior to assembly.

I. Install pitch pans on conduits which penetrate through roofs

J. Fill external void between conduit/sleeve and wall openings with non-shrink grout or suitable fire-retardant sealant for air and water tightness.

K. Maintain 6" clearance between conduit and piping and 12" clearance between conduit and heat sources such as flues, steam pipes and heating appliances.

L. Arrange conduits to maintain headroom and present a neat appearance.

M. Conduits run above ground shall be supported at least every 10 feet and once in every change in direction and within three feet of the end of each straight run terminating in an enclosure and/or junction box.

N. Conduit runs shall contain no more than the equivalent of three (3) 90 degree bends between outlets or pull points.

O. Above ground conduit shall be installed to avoid moisture traps.

P. Secure conduit runs firmly to specified support channels by conduit straps or by hangers, as required.

Q. Where aluminum conduit penetrates a concrete wall/floor-slab and/or walls/floors of dissimilar material (other than Stainless Steel), wrap the aluminum conduit with pipe tape (as specified in Subsection 2.03 above) using a 50% overlap throughout the entire distance/length of the penetration and an additional 6-inches of distance beyond either side of the penetration. Similarly where conduit run is in contact with equipment of dissimilar material (other than Stainless Steel) such as pipes, frames, structural frames, etc., isolate the aluminum conduit by wrapping the aluminum conduit with pipe tape (as specified in Subsection 2.03 above) using a 50% overlap throughout the entire distance/length of the contacted region plus an additional 6-inches of distance beyond either end of the contacted region.

R. Seal and pack/fill ends of each conduit with fire-retardant and waterproof conduit/duct sealant as specified in Subsection 2.03 above.

S. Seal empty spare conduits with a threaded conduit plug sized to the trade size of the conduits as specified in Subsection 2.03 above. Refer to details shown on the PLANS.

T. Install conduit measuring tape in all unused conduits shown on the PLANS as empty or spare. Conduit measuring tape shall have measurements in feet and shall be constructed of durable Kevlar material having low stretch (expansion) rate as manufactured by Greenlee, or approved equal.

3.03 INSTALLATION OF SUPPORT CHANNELS

A. Utilize support channels and mounting hardware (as specified in Subsection 2.04 above) to install raceways, and any other surface mounted electrical, instrumentation and control equipment. Refer to details shown on the PLANS.

B. Whenever support channels are cut in the field, the cut ends shall be filed smooth and shall be cleaned using liberal amounts of a contact cleaner to remove all residual elements from the cutting and filing process. Coat all field cut ends with cold galvanizing paint.

3.04 HOUSEKEEPING CONCRETE PAD FOR EQUIPMENT:

A. Provide housekeeping concrete pad for all outdoor equipment whether it is free-standing or surface mounted. Outdoor electrical equipment pads shall be as detailed on the PLANS.

B. Provide housekeeping concrete pad for all indoor free-standing electrical and instrumentation and control equipment, pull boxes and junction boxes, etc. Housekeeping concrete pad shall be as detailed on the PLANS.

3.05 MEASUREMENT AND PAYMENT

A. No separate measurement or payment for work performed under this Section. Include cost of same in Contract price bid for work of which this is a component part.

END OF SECTION

SECTION 16200

WIRING (600 VOLTS AND BELOW)

PART 1 - GENERAL

1.01 SCOPE

A. This item of the specifications describes the field wiring to be furnished and installed in the project.

B. Furnish and install all wiring required to make the electrical system completely and satisfactorily operable. Comply with the National Electrical Code and all applicable federal, state, and local codes, regulations and ordinances.

1.02 RELATED REQUIREMENTS

A. Related work as called for on the PLANS, as specified herein or in other Sections of the Specifications.

1.03 REFERENCES

A. This section contains references to the following codes and standards. They are a part of this section as specified. In case of conflict between the requirements of this section and the listed standards, the requirements of this section shall prevail.

Code	Title
NFPA 70-2011	National Electrical Code (NEC)
NEMA WC-70	Power Cables Rated 2000 Volts or Less for the Distribution of Electrical Energy
ASTM B8	Standard Specification for Concentric-Lay-Stranded Copper Conductors, Hard, Medium-Hard, or Soft.
UL 44	Thermoset-Insulated Wires and Cables
UL 510	Polyvinyl Chloride, Polyethylene, and Rubber Insulating Tape
UL 486	Wire Connectors
ANSI C119	Electrical Connectors

1.04 SUBMITTALS

A. Submit shop drawings in accordance with Section 01300 of the Contract Specifications.

B. Submit Operations and Maintenance Manuals (O&M) in accordance with Section 01730 of the Contract Specifications. O&M Manuals shall include copies of the approved shop drawings, factory and on-site/field test data.

PART 2 - PRODUCTS

2.01 GENERAL REQUIREMENTS

A. All wire and cable on this project shall be new, unused, in good condition and shall be delivered in standard coils, packages or reels. Samples of all wire shall be submitted by the Contractor when so requested by the Owner for the purpose of determining acceptability of the wire. Wire and cable which has been rejected shall not be used again. Such rejected wire and cable shall, on the contrary, be removed from the Owner's premises forthwith. Decisions as to the quality of the wire and cable furnished and the acceptance of such wire and cable shall be made by the Owner or its representative.

2.02 SINGLE CONDUCTOR - GENERAL ELECTRICAL POWER SYSTEM AND AUXILIARY ELECTRICAL SYSTEM WIRING

A. All wire shall be 98% conductivity copper, 19-Strand, single conductor Type XHHW-2. This wire shall have moisture resistant insulation and clean stripping characteristics. Wire shall be marked at minimum distance of every ten feet (10') with the size, type and voltage of the wires as well as the manufacturer's name. All neutral and ground wires shall be insulated and identified and marked.

The color of the wire shall be selected to conform in all instances to the following table:

Phase	277/480 Volts	120/208 Volts AC	125 Volts DC
ΦA	Brown	Red	----------
ΦB	Yellow	Black	----------
ΦC	Purple	Blue	----------
Neutral	Gray	White	----------
Ground	Green	Green	Green
Motor Space Heater (H)	----------	Black	----------
DC Wiring (+)	----------	----------	Blue
DC Wiring (-)	----------	----------	Blue

B. Any interlock wiring installed in one device with power from another device shall be properly marked.

C. The minimum wire size shall be #10 AWG for all wiring unless shown otherwise on the PLANS.

D. Departures from the sizes shown shall be made only in those cases in which the National Electric Code requires the use of larger conductors.

E. In no case shall there be a voltage drop greater than 1.0% at 480 volt service and 1.0% at 120/208 volt service. The Contractor may, if he deems it is necessary or advisable, use larger sized conductors than those shown on the PLANS.

F. General Electrical Power System and Auxiliary Electrical System Wiring shall be as manufactured by General Cable Company, The Okonite Company, or approved equal.

2.03 MULTI-CONDUCTOR WIRING

A. Utilize multi-conductor cables in all cable tray systems and underground conduit system with manholes/handholes and in above ground conduit where it is the continuation of cable run entering/exiting cable tray or underground system (i.e., do not splice into a standard single conductor power and auxiliary electrical system wiring before or after transition of conduit system to an above ground system. All cables shall be continuous without splices from source to destination of termination and vise-versa, thus type of cable must also remain the same throughout the entire run).

B. Multi-Conductor cables for Electrical System Control Wiring shall be the shielded type and shall be rated 600 volts. Cables shall be suitable and rated for installation in wet or dry locations, for AC or DC service at conductor temperature of 90°C. Cables shall be suitable and UL listed for use in conduit system, duct bank system, cable trough system, cable tray system, and directly buried in the ground/earth, and sunlight resistant.

C. Features:

1. As minimum, the Multi-Conductor control cables shall have the following features:

2. Cables shall meet or exceed the following testing requirements: Vertical Tray Flame Tests: IEEE 383-1974, Sizes 4/0 AWG and larger meet FT4/IEEE 1202. CSA C22.2 No. 239 Type CIC for sizes 4/0 AWG and smaller.

3. Cables shall have mechanical rigidity and shall be flexible, easy to install and terminate.

4. Cables shall be resistant to water, oil, and chemicals. Cables shall also be stable at elevated temperatures: 90°C continuous rating in wet or dry locations, 130°C emergency overload rating, and 250°C short circuit rating.

5. Conductors:

a. Each individual conductor in the Multi-Conductor cables shall be Uncoated soft copper per ASTM B-3. Sizes smaller than #8 AWG are compress stranded per ASTM B-8. Sizes #8 AWG and larger are compact stranded per ASTM B-496

b. Individual conductors insulation per UL 1581, listed as XHHW-2.

6. Overall Jacket, Conductor sizes, Conductor Quantity, Overall Diameters:

a. Overall PVC jacket material and Complies with UL 1277. Refer to PLANS for individual conductor quantity and sizes.

b. All grounding conductors shall be insulated with green color insulation.

7. Manufacturer:

   a. 600 volts multi-conductor Electrical System Wiring Cables shall be as manufactured by Okonite-FMR Okoseal Type TC or TC-ER Cable, or approved equal.

8. Color Coding:

   a. The color coding of the individual conductors in a cable shall comply with the color coding requirements for the single conductors in a 120/208 volt systems, outlined under Subsection 2.02B.

2.04 INSTRUMENT SIGNAL WIRING ,"4-20MADC SIGNAL WIRING"

A. Instrument wiring (4-20 milliamp signal wiring) shall be twisted shielded pair, #16 AWG 7-strand bare copper with 30 mil, 600 volt PVC insulation over each conductor; 100% aluminum-mylar tape shield over twisted pair and 7-strand tinned copper drain wire with each pair; 45 mil thick black FR-PVC outer jacket. The color of the positive (+) and negative (-) conductors within the each cable shall be BLACK and WHITE respectively.

B. Instrument Signal Wiring ,"4-20mAdc signal wiring" Cable shall be Samuel Moore and Company Dekoron Division Series 1852, Belden, or approved equal.

2.05 MULTI-CONDUCTOR RTD TEMPERATURE WIRING CABLES

A. Resistance Temperature Detection "RTD" Wire: Single triad cable, #16 AWG, 7 strand bare copper; 15 mil, 300 volt PVC insulation over each conductor; 100% aluminum-mylar tape shield over triad and 7-strand tinned copper drain wire with each triad; 35 mil thick black FR-PVC outer jacket. The color of the positive (+), negative (-) and sense (S) conductors within the triad cable shall be BLACK, WHITE and RED respectively.

B. RTD Temperature Wiring Cable shall be Samuel Moore and Company Dekoron Division Series 1862, Belden, or approved equal.

2.06 SINGLE CONDUCTOR CONTROL WIRING

A. Single conductor control wiring shall be 98% conductivity copper, 19-Strand, single conductor Type XHHW-2. This wire shall have moisture resistant insulation and clean stripping characteristics. Wire shall be marked every ten feet (10') with the size, type and voltage of the wires as well as the manufacturer's name.

B. The minimum wire size shall be #12 AWG for all wiring unless shown otherwise on the PLANS.

C. The color of the wire shall be RED.

D. Single Conductor Control Wiring shall be as manufactured by General Cable Company, The Okonite Company, or approved equal.

2.07 CONTROL CABINET/PANEL WIRING

A. Control, power and alarm wiring within each control cabinet/panel shall be tin-plated copper, extra flexible 41-strand, single conductor Type SIS with cross-linked polyethylene (XLPE) insulation. Wire shall be marked at a minimum of every ten feet (10') with the size, type and voltage of the wires as well as the manufacturer's name.

B. The color of the wire shall be selected to conform in all instances to the following table:

FUNCTION	COLOR CODE
Control/status signal wiring. This does not apply to control/status signal wiring that are scheduled for interface with remote Programmable Logic Controller (PLC)	Red
Control wiring to relay coils (L1 & L2 terminals or H&N terminals) that are not generated from a PLC Discrete Output point (DO)	Gray
120Vac power supply wiring to instrumentation and control devices that are not generated from a PLC Discrete Output point (DO)	Gray
125 VDC power supply wiring. Positive (+) and Negative (-) terminals.	Blue (+) and Brown (-)
24 VDC power supply wiring to instrumentation and control devices. Positive (+) and Negative (-) terminals.	Blue (+) and Brown (-)
Alarm wiring	Yellow
Wiring to instrument control cabinet interior lights/receptacle	Black = Hot White = Neutral
Control/status signal wiring to Programmable Logic Controller **(**PLC) -Discrete Input Modules (DI's as shown on the PLANS)	Violet
Control/status signal wiring from Programmable Logic Controllers (PLC's) –Discrete Output Modules (DO's as shown on the PLANS	Pink

C. The minimum wire size shall be #14 AWG for all wiring unless shown otherwise on the PLANS.

D. Control panel/cabinet wiring shall be as manufactured by General Cable Company, The Okonite Company, or approved equal

PART 3 - EXECUTION

3.01 INSTALLATION

A. Before wire is pulled into any conduit, thoroughly swab the conduit to remove all foreign material and to permit the wire to be pulled into a clean, dry conduit. Use Ideal #77 or equal lubricant in pulling any wire. Pull all conductors into their respective conduits by hand except where written permission of the Owner's duly authorized representative is secured to the contrary.

B. Support all conductors in vertical conduits or raceways in the manner set forth in Article 300.19 of the latest revision of the National Electric Code. Use O.Z. Gedney Type "S" supports. Do not use lighting fixtures for raceways or circuits other than for parallel wiring of fixtures.

C. SPLICING/CONNECTION OF 208/120 VOLT LIGHTING AND RECEPTACLE CIRCUITING IN ALL LOCATIONS EXCEPT INSIDE OF THE ENVIRONMENTALLY CONTROLLED ROOM:

1. General: Do not make any splices or taps in any conductor except where absolutely required for 120 volt lighting circuits feeding lights or receptacles. Such splicing may only take place in splice/junction boxes. The requirements mentioned herein apply to all connections/splices of lighting and receptacle circuiting in all locations except for 208/120 volt connections/splices made inside the following areas:

   a. Inside the existing Electrical Room

2. When the composition of wire quantity and sizes to be spliced/connected are NOT Greater Than two (2) #10 AWG wires and/or NOT Greater Than three (3) #10 AWG wires, Utilize 600 volts WeatherProof Wire-Nut Wire Connectors for splicing of 208/120 volts lighting and receptacle circuiting. The WeatherProof Wire-Nut Wire Connectors shall be 600 volts rated, twist-on type and shall be pre-filled (factory-filled) with Silicone-Based Sealant for maximum protection against Moisture and Corrosion. The WeatherProof Wire-Nut Wire Connectors shall be as manufactured by IDEAL Model 61, 62, or 63 WeatherProof Wire-Nut Wire Connectors.

3. When the composition of wire quantity and sizes of the of 208/120 volts lighting and receptacle circuiting is Greater Than two (2) #10 AWG wires and/or three (3) #10 AWG wires, Utilize 600 volts Multi-Cable Connector Blocks that comply with UL486A listings for use with fine-stranded, flexible and extra-flexible copper conductors and are pre-filled with an oxide inhibitor. The connector block shall be preinsulated with a specially formulated abrasion and chemical resistant plastisol compound that will not support combustion and shall be UV rated and cold temperature rated to -45°C. The Multi-Cable Connector Blocks shall be the Grey Series as manufactured by Polaris Electrical Connectors, or approved equal.

D. SPLICING OF 208/120 VOLT LIGHTING AND RECEPTACLE CIRCUITING INSIDE OF THE ENVIRONMENTALLY CONTROLLED ROOM:

1. General: Do not make any splices or taps in any conductor except where absolutely required for 120 volt lighting circuits feeding lights or receptacles. Such splicing may only take place in splice/junction boxes. The requirements mentioned herein apply ONLY to connections/splices of lighting and receptacle circuiting made inside the following areas:

a. Inside of the existing Electrical Room

2. When the composition of wire quantity and sizes to be spliced/connected are NOT Greater Than two (2) #10 AWG wires and/or NOT Greater Than three (3) #10 AWG wires, Utilize 600 volts, PERFORMANCE+ Twist-ON Spring Connectors for splicing/connections of 208/120 volts lighting and receptacle circuiting (as well as voice communication 120 volt power circuiting), as manufactured by 3M type Performance+ Spring Connectors.

3. When the composition of wire quantity and sizes of the of 208/120 volts lighting and receptacle circuiting is Greater Than two (2) #10 AWG wires and/or three (3) #10 AWG wires, Utilize 600 volts Multi-Cable Connector Blocks that comply with UL486A listings for use with fine-stranded, flexible and extra-flexible copper conductors and are pre-filled with an oxide inhibitor. The connector block shall be preinsulated with a specially formulated abrasion and chemical resistant plastisol compound that will not support combustion and shall be UV rated and cold temperature rated to -45ºC. The Multi-Cable Connector Blocks shall be the Grey Series as manufactured by Polaris Electrical Connectors, or approved equal.

E. Where equipment is subject to vibration, such as motors of process mechanical equipment, exhaust and supply fans, unit heaters, all motors, motor operated valves, electric operated valves, transformers, air-handling units, compressors, condensing units, etc., Utilize 600 volts Multi-Cable Connector Blocks that comply with UL486A listings for use with fine-stranded, flexible and extra-flexible copper conductors and are pre-filled with an oxide inhibitor. The connector block shall be preinsulated with a specially formulated abrasion and chemical resistant plastisol compound that will not support combustion and shall be UV rated and cold temperature rated to -45ºC. The Multi-Cable Connector Blocks shall be the Grey Series as manufactured by Polaris Electrical Connectors, or approved equal.

F. All wiring connections must be insulated with 600 volt insulation system

G. After all wiring connections have been made, IN ALL AREAS EXCEPT INSIDE OF THE ENVIRONMENTALLY CONTROLLED ROOM, the Contractor shall:

1. In all Panelboards, Distribution Panelboards, Motor Control Centers, Disconnect Switches and Enclosed Circuit Breakers, Junction/Terminal Boxes, and Instrumentation and Control Panels: Apply generous quantities of 3M Scotch 1601 Clear-Color Fast Drying Sealer and Insulator, or approved equal by Dow Chemical, corrosion resistant and moisture repelling Electrical Coating/spray to all termination points, terminals, terminal blocks, ground bar, neutral bar/bus, branch circuit breakers lugs and exposed/stripped ends of each phase conductor terminated to each branch circuit breaker, main lugs, each main circuit breaker lugs and exposed ends of wires terminated to main circuit breakers, exposed/stripped end of each neutral conductor terminated to the neutral bar/bus, exposed end of each ground wire terminated to the ground bar/bus, bolt-on connections of each branch circuit breaker to each phase bus/bar, bolt-on connections of each main circuit breaker to each phase bus/bar, etc. Additionally, refer to the additional installation requirements in the Specification Sections of the Motor Control Centers, Panelboards, Disconnect Switches and Enclosed Circuit Breakers, Boxes and Cabinets, and Instrumentation and Control Cabinets/Panels.

2. In all field instrumentation and control devices (field control stations, field control panels, process variable transmitters [level, pressure, flow, density, etc.]: Apply generous

quantities of 3M Scotch 1601 Clear-Color Fast Drying Sealer and Insulator, or approved equal by Dow Chemical, corrosion resistant and moisture repelling Electrical Coating/spray to all termination points, terminals, terminal blocks, and all exposed/stripped ends of insulated wires, etc.

3. At termination point of incoming/outgoing power and instrumentation and control and communication wiring to all valve actuators, motor operated valves, solenoid operated valves, package control panels of process equipment, etc.: Apply generous quantities of 3M Scotch 1601 Clear-Color Fast Drying Sealer and Insulator, or approved equal by Dow Chemical, corrosion resistant and moisture repelling Electrical Coating/spray to all termination points, terminals, terminal blocks, all exposed/stripped ends of each phase and neutral conductor, all exposed/stripped ends of each instrument wiring and associated shield wire (where terminated), all exposed/stripped ends of each control wiring, all exposed/stripped ends of each communication wiring, etc.

H. Tag all power, Instrumentation and Controls and all other types of auxiliary electrical wiring and cables at both ends and in all pull boxes, wireways, motor control center wireways, Switchgears, automatic transfer switches, transformers, battery banks, cable closets, DC Power conversion and Inversion system cabinets/assemblies, panelboards, light switch boxes, receptacles, and disconnect switches, Instrument and Control Panels, etc. Use Flame-Retardant, Heavy-Duty Industrial Grade and Heat Shrinkable type wire tags approved for this use and as manufactured by Raychem type Heavy-Duty Industrial Grade ShrinkMark Heat-Shrinkable Marking Sleeves. All wire tags shall be YELLOW in color (except the color used for branch-circuit lighting and convenience receptacle circuits shall be WHITE). HEAT SHRINK ALL WIRE TAGS. All wire tags must be typed with an indelible marking process. Utilize Raychem Portable-Marking-System complete with wire tag cartridges. Character size shall be minimum of 1/8” in height. Handwritten tags WILL NOT BE ACCEPTED. Tag wiring and cables per Subsection 3.03 of this Section of the Specifications and per the Austin Water Utility cable and wire tagging standards. Tag each wire in a Multi-Conductor cable in addition to the overall cable itself. To represent all of the text to be shown, multiple wire tags may be needed at each end of the wire. Provide additional tags as necessary at no additional cost to the Owner.

I. In a Cable Tray System tag all power, Instrumentation and Controls, and all other types of auxiliary electrical wiring and cables at increments of no greater than every 10ft. (10’-0”); place a tag on each wire/cable spaced at 10ft. (10’-0”) throughout the run of each wire/cable in the cable tray system in addition to the tagging requirements outlined in Subsection 3.01-I (above). Cable/wire tags shall be model-TH complete with slip-in characters style EZ-H and nylon tie straps as manufactured by Almetek, 1451 Route 46, Ledgewood, New Jersey or approved equal. Fasten each end of wire tag with the nylon tie straps to insure a secure installation. Tag each cable/wire, cable tags shall be in BLACK lettering with YELLOW background. The height of each letter shall be 1-1/2”, however, in the submittal review process the Owner at his/her discretion may elect to change the lettering height of certain tags to a size smaller than 1-1/2” or maintain the height of each letter of each tag at 1-1/2” in height. The Contractor shall make this adjustment as deemed necessary by the Owner at no additional cost to the Owner.

J. Ground shielded instrument cables at one point only, i.e.; at the final destination in the associated instrument and control cabinets.

K. Conform to the requirements of Section 16800 of the Specifications.

L. Fireproof all cables in underground manholes and handholes.

M. Terminate stranded wiring by use of lugs, clamps or pressure type terminals. Do not terminate by wrapping wire around terminals.

N. Ground shielded instrument cables at one point only, i.e.; at the final destination in the associated instrument and control cabinet.

3.02 TESTS

A. Perform all tests as outlined in Section 16800 and all other tests which are necessary to determine that the electrical wiring system is in satisfactory operating condition. Wiring shall be tested end-to-end after it is pulled in the conduit system.

3.03 WIRE TAGGING METHODOLOGY

A. Single Conductor Wire Tagging Scheme:

1. All single conductor control and power wiring shall be tagged utilizing the source and destination method. In general, as minimum each tag shall be comprised of various fields which are:

   a. Device Identifiers,

   b. Terminal Numbers and,

   c. Equipment Identification name

2. The following is the format that shall be used for each control power single conductor wire tag:

XXXX	-		(XXXX-XXXX-XXXX	/	XXXX	-	XX)
Device Identifier		Terminal Number	Equipment Identification Name		Device Identifier		Terminal Number

   a. The tag information to the left refers to the point of termination. Tag information in parenthesis refers to the point of origination. Note: For wiring within the boundaries of a piece of equipment, The Equipment identification name shall not be required, only the Device Identifier and the Terminal Number from the point of origination. Examples to this exception would be, wiring from one terminal strip to another within the same control panel, etc.

3. The following provides a brief description to each of the fields required within a single wire tag:

FIELD	DESCRIPTION
Device Identifier:	A four (4) alphanumeric character field that shall uniquely identify a device within a piece of equipment. Examples are: TB1, for Terminal Block Number 1, and CR02 for Control Relay #02, etc.
Terminal Number:	A two (2) alphanumeric character field that shall identify which specific point on the Device the wire must be terminated to. Refer to manufacturer's labeling or record drawings for Device Terminal Numbers.
Equipment Identification Name:	A twelve (12) alphanumeric character field that shall be the same as the physical Equipment Identification Nameplate attached to the equipment.

B. Single Conductor Wire Tagging Scheme in a Multiconductor Cable:

1. All single conductor control and instrument wiring (in Multiconductor Instrument or Control Cables) shall be tagged utilizing the source and destination method. In general, each tag shall be comprised of various fields which are 1) Device Identifiers, 2) Terminal Numbers, and 3) Equipment Identification Name, as minimum.

2. The following is the format that shall be used for each single conductor wire tag in a multiconductor cable (Instrumentation or Control wiring Cables):

XXXX	-	XX	(XXXX	/	XX)
Device Identifier		Terminal Number	Cable ID		Conductor Number

a. The tag information to the left refers to the point of termination. Tag information in parenthesis refers to the point of origination.

3. The following provides a brief description to each of the fields required within a single tag (in a Multiconductor Cable):

FIELD	DESCRIPTION
Device Identifier:	A four (4) alphanumeric character field that shall uniquely identify a device within a piece of equipment. Examples are: TB1, for Terminal Block Number 1, and CR02 for Control Relay #02, etc.
Terminal Number:	A two (2) alphanumeric character field that shall identify which specific point on the Device the wire must be terminated to. Refer to manufacturer's labeling or record drawings for Device Terminal Numbers.
Cable Identification (Cable ID):	A five (5) alphanumeric character field that shall uniquely identify a cable within the facility. The first character shall identify the cable type as follows: C - for Control Cables I - for Instrumentation Cables P - for Power Cables The remaining four (4) alphanumeric characters shall make-up a unique number for a given cable type within the facility.

C. Overall Cable Tag of a Multiconductor Cable:

1. In addition to tagging each single conductor in a multiconductor cable (as described in 3.03 B, above), the overall jacket of each multiconductor cable shall also be tagged to uniquely identify each cable within the facility. In general, each cable tag shall be comprised of various fields which are 1) Cable Identification (Cable ID), and 2) Equipment Identification Name, as minimum.

2. The following is the format that shall be used for overall cable tag of each multiconductor cable:

XXXX	(XXXX-XXXX-XXXX	/	XXXX-XXXX-XXXX)
Device Identifier	Source Equipment Identification Name.		Destination Equipment Identification Name

a. The tag information to the left refers to the actual cable Identification (name). Tag information in parenthesis refers to the Identification Name of the Equipment at point of origination (source), followed by the Identification Name of the Equipment at the point of termination (Destination Point).

3. The following provides a brief description to each of the fields required within a cable tag:

FIELD	DESCRIPTION
- Cable Identification (Cable ID):	A five (5) alphanumeric character field that shall uniquely identify a cable within the facility. The first character shall identify the cable type as follows: C - for Control Cables I - for Instrumentation Cables P - for Power Cables The remaining four (4) alphanumeric characters shall make-up a unique number for a given cable type within the facility.
- Source Equipment Identification Name:	A twelve (12) alphanumeric character field that shall be the same as the physical Equipment Identification Nameplate attached to the source (origination) equipment.
- Destination Equipment Identification Name:	A twelve (12) alphanumeric character field that shall be the same as the physical Equipment Identification Nameplate attached to the destination equipment (equipment at point of termination).

4. All cable tags (except in Manholes, handholes, above ground cable closets, and in cable tray system), shall be of 3-ply engraved plastic (phenolic) with background color, letter sizes, etc. as follows:

Cable Type	Tag Color	Color of Lettering	Letter Height
600 volt Power Cable	Orange	White	3/16” (min.)
600 volt Control Cable	Orange	White	3/16” (min.)
Instrumentation Cable	Black	White	3/16” (min.)

3.04 MEASUREMENT AND PAYMENT

A. No separate measurement or payment for work performed under this Section. Include cost of same in Contract price bid for work of which this is a component part.

END OF SECTION

THIS PAGE IS LEFT BLANK INTENTIONALLY

SECTION 16250

BOXES AND CABINETS

PART 1 - GENERAL

1.01 SCOPE

A. Furnish and install all cabinets, junction boxes, pull boxes and outlet boxes as shown on the PLANS, required by the Specifications or N.E.C., or as otherwise necessary for a satisfactory operating system.

1.02 RELATED REQUIREMENTS

A. Related work as called for on the PLANS, as specified herein or in other Sections of the Specifications.

1.03 SUBMITTALS

A. Submit shop drawings in accordance with the Section 01300 of the Contract Specifications.

B. The Contractor shall submit manufacturer's catalog data certifying Aluminum Boxes and Cabinets, as specified within this section, to be 99.0% copper-free.

C. Submit Operations and Maintenance Manuals (O&M) in accordance with Section 01730 of the Contract Specifications. O&M Manuals shall include copies of the approved shop drawings, factory and on-site/field test data.

PART 2 - PRODUCTS

2.01 JUNCTION AND PULL BOXES

A. Lighting and power, signal, telephone, voice communication, instrumentation and controls, and any other junction and pull boxes hereinafter specified or shown on the PLANS shall be watertight and corrosion resistant as follows:

1. Outdoor boxes shall be NEMA-4X 316 gauge stainless steel.

   a. Boxes shall be equipped with hinged doors complete with ¼ (quarter) turn door latches. Screw and clamp type door latches <u>are not acceptable</u>.

   b. Boxes shall have a smooth, non-brushed finish.

2. Indoor boxes smaller than or equal to 12" wide x 12" high mounted indoors in ALL AREAS except for boxes mounted inside the environmentally and climate controlled Electrical Rooms and Control Rooms, shall be 99.0% copper-free rigid Aluminum NEMA-4X corrosion resistant and water tight boxes. Boxes shall be equipped with

heavy duty continuous hinge doors complete with ¼ (quarter) turn door latches. Screw and clamp type door latches are not acceptable.

3. Indoor boxes larger than 12” wide x 12” high mounted indoors in ALL AREAS shall be NEMA-4X 316 gauge stainless steel. Boxes shall be equipped with hinged doors complete with ¼ (quarter) turn door latches. Boxes shall have a smooth, non-brushed finish. Screw and clamp type door latches are not acceptable.

4. Indoor boxes installed in Electrical Rooms and Control Rooms that are environmentally and climate controlled, shall be NEMA-12 dustight/oiltight. Boxes shall be equipped with hinged doors complete with ¼ (quarter) turn door latches. Screw and clamp type door latches are not acceptable. All NEMA-12 boxes shall have ANSI #61 Gray finish.

5. Vent Drain Fitting:

   a. Where specifically required by the PLANS, furnish and install vent drain fiting for pullbox/junction box. Orient fitting to facilitate water drainage out of box interior by gravity.

   b. NEMA-4X rated, UL Listed, one-way mechanical shut-off to prevent water and contaminants from entering enclosure

   c. Type 304 Stainless Steel sleeve enclosing corrosion resistant polyester vent housing

   d. Manufacturer: Hoffman H20MIT Vent Drain Type 4X, or approved equal.

B. Pull boxes shall be used only to reduce the number of bends for conduit, supports, taps, troughs and similar applications and shall likewise be constructed as specified herein. Junction boxes shall only be used where shown on the PLANS. Use of junction boxes for other than receptacle and lighting circuit wiring is not permitted.

C. Boxes or cabinets shall be not less than 6-inches deep and their size determined by the requirements of , and in compliance with the National Electrical Code (NEC).

D. Stainless steel and painted steel junction and pull boxes shall be as manufactured by Hoffman Concept Series, Rittal, or approved equal.

E. Aluminum junction and pull boxes shall be as manufactured by Hoffman Comline Series, Rittal, or approved equal.

2.02 DEVICE BOXES

A. Device boxes shall be die cast Aluminum, 99.0% copper-free, double-gang (as minimum) and multi-gang device boxes, as manufactured by Crouse-Hinds type FS and FD device boxes (feed-through or dead-end configuration, as required), or approved equal by Appleton, Hubbell-Killark, or approved equal.

B. Device box covers shall be gasketed 99.0% copper-free Aluminum.

PART 3 - EXECUTION

3.01 INSTALLATION

A. Set box square and true with building surfaces. Secure boxes firmly to support channels. Equipment support channels shall be per the requirements of Section 16150 “Raceways, Fittings, and Supports”.

B. Do not mount surface mounted device and outlet boxes directly to building/structure walls. Utilize 316-stainless steel support channels, then secure/mount device and outlet boxes to the support channels. All mounting hardware shall be 316-stainless steel. Additionally, refer to details shown on the PLANS.

C. Tag all boxes and cabinets with 3-ply phenolic laminated identification nameplate with minimum letter height of 1/4-inch. Tag shall identify source name and number of the circuit contained within. Attach identification nameplates to the boxes and cabinets with two-stainless steel screws. Identification nameplate of all boxes and cabinets shall be 3-ply phenolic “Black-White-Black” laminated nameplates with adhesive backplane.

3.02 MEASUREMENT AND PAYMENT

A. No separate measurement or payment for work performed under this Section. Include cost of same in Contract price bid for work of which this is a component part.

END OF SECTION

THIS PAGE IS LEFT BLANK INTENTIONALLY

SECTION 16300
WIRING DEVICES

PART 1 - GENERAL

1.01 SCOPE

A. Furnish and install all necessary wiring devices at the locations indicated on the Plans and elsewhere as required.

B. Comply with the requirements of Specification Sections 16250 and 16800.

1.02 SUBMITTALS

A. Submit shop drawings in accordance with Section 01300 of the Contract Specifications.

B. Submit Operations and Maintenance Manuals (O&M) in accordance with Section 01730 of the Contract Specifications. O&M Manuals shall include copies of the approved shop drawings, factory and on-site/field test data.

PART 2 - PRODUCTS

2.01 LIGHT SWITCHES

A. This subsection covers light switches that shall be installed indoors inside the SURGE VAULT and in all OUTDOOR areas.

B. Light switches shall be Specification grade, 20 amp, 120/277 volts, switches (single pole through four-way respectively). Switches shall be Factory-Sealed-Switches where each switch is enclosed in a unique sealing well with double flanges that mate with the light switch cover and box assembly. Light switches shall be raintight, corrosion resistant, and rated for use in wet locations and in Class-I Division-2 hazardous areas (as classified by NEC). Light switches shall be as manufactured by Crouse-Hinds, Killark, or approved equal.

C. The light switch cover shall have an external front operator (for snap switches). The cover shall be Die Cast Aluminum, 99.0% copper-free, watertight and corrosion resistant. In a group installation, provide manufacturer's assemblies for two gang tandem, three, four and/or five gang bodies (device boxes). Light switch covers shall be as manufactured by Crouse-Hinds, Killark, or approved equal.

D. Light switch boxes shall be Die Cast Aluminum, 99.0% copper-free, Single and Multi-Gang device boxes, as manufactured by Crouse-Hinds type EDSM and EDSC double-gang (as minimum) and multigang device boxes (Feed-through or dead-end configuration, as required), or approved equal by Appleton, Killark, or approved equal.

E. All mounting hardware shall be 316-stainless steel.

2.02 120 VOLTS AC, COVENIENCE RECEPTACLES

A. This subsection also covers receptacles that shall be installed inside the SURGE VAULT and outdoors in ALL AREAS, including receptacles mounted on exterior walls/structural members of buildings/structures.

B. Pass & Seymour Cat. No. 2095TRWR specification grade, weather-resistant type, ground fault interrupter type receptacles with red indicator light. Ground-fault interrupter type receptacles shall be duplex, 3-wire, polarized grounding type, rated 20 amp, 125 volt, 60 Hertz

C. Provide raintight while-in-use type hinged cover conforming to NEMA-3R requirements and suitable for installation outdoors in a wet location. Provide gasket, adapter, and mounting hardware to mount cover to previously specified device enclosure. Weather proof while-in-use type cover shall be Die Cast Powder Coated Aluminum 99.0% copper-free, complete with rubber gasket. Provide Metal Weatherbox While-In-Use Protective Covers as manufactured by Cooper Industries Catalog No. WIUMH-1 or WIUMV-1, Thomas & Bettes Corporation Red Dot Catalog No. CKMU or CKMUV, or approved equal.

D. Surface mounted receptacle boxes shall be Die Cast Aluminum, 99.0% copper-free, Single and Multi-Gang Weatherproof Outlet boxes, as manufactured by Crouse-Hinds, Appleton, or approved equal. Die Cast Aluminum boxes shall have 3/4-inch threaded hubs, Minimum box depth shall be 2-5/8".

E. All mounting hardware shall be 316-stainless steel.

2.03 MANUAL MOTOR STARTERS

A. Manual motor starter stations shall be heavy duty oil tight, corrosion resistant, Factory-Sealed and rated for use in wet locations and in Class-I Division-2 areas (as classified by NEC). Minimum auxiliary contacts rating shall be 10 amp (inductive load rating) at 120 VAC. Unit shall be furnished with thermal overloads. Contacts shall change state when the thermal overloads trip or short circuit occurs. Additionally, the unit shall be furnished with a local overload alarm light (red light). Pilot Lights shall be NEMA Style, full size 30-millimeter (30mm), Transformer Type Light Emitted Diode (LED), NEMA 4x/13 oil tight/watertight/and corrosion resistant, full size, push to test type, rated at 120VAC, with legend plate marked as shown on the drawings. Lens color shall be Red, unless shown otherwise on the PLANS. Pilot lights shall be as manufactured by Allen-Bradley Bulletin 800T NEMA Type 4x/13, oil tight/watertight/and corrosion resistant, or approved equal. Miniature size pilot lights will not be accepted. For buttons/lights, the color Red shall indicate ON and the color Green shall indicate OFF.

B. Furnish manual motor starter assembly in 316 Stainless Steel enclosure. Unit shall be furnished with "on-off" push-button operator (as required by the PLANS) mounted on the face of the starter enclosure.

C. Furnish and install all accessories needed to pad lock manual motor starter in OFF position.

D. Manual Motor Starter Stations shall be as manufactured by Allen Bradley Bulletin 609U Factory-Sealed with specified accessories, or approved equal by Crouse-Hinds, Appleton.

E. Provide nameplates/legend plates for each manual motor start, and each pilot device installed.

F. Legend Plates: Legend plate fastened to each control station shall be the Manufacturer's standard with lettering indicated on the Plans. Legend plates shall be of the same manufacture as the respective pushbuttons, selector switches and pilot lights.

G. Identification Nameplates: Nameplates, unless otherwise specified, shall be constructed of 3-ply "Black-White-Black" laminated phenolic material having engraved letters approximately 1/4 inch high (and/or of size shown on the drawings) extending through the black face into the white layer. Nameplates located on the face of the control station enclosures shall be secured with two 316 Stainless Steel screws.

PART 3 - EXECUTION

3.01 INSTALLATION

A. Mount light switches and manual motor starters at 48" above finished floor to the center of the switches unless otherwise noted. Locate switch/motor starter on the side of the door opening opposite the hinges and as shown on the PLANS.

B. Mount receptacles at 36" above finished floor (to the bottom of the receptacles) in all areas (unless otherwise noted on the PLANS).

C. Mount receptacles that deliver DC (Direct Current) Operating Voltage at 54" above finished floor (to the center of the receptacles) in all areas (unless otherwise noted on the PLANS).

D. Test wiring devices in accordance to Section 16800 of the contract specifications.

E. For manual motor starts, perform continuity tests on installed manual motor starters and circuits. Check control and interlock wiring for proper operation.

F. Identify all 120VAC receptacles, special purpose outlets, and light switches by branch circuit number. Example, for a light switch that is powered by circuit "LP-23", the identification nameplate on the face of the light switch shall read "ckt. LP-23". Similarly, the same applies for all special purpose outlets and 120VAC receptacles. Identification nameplates shall be 3-ply phenolic "'Black-White-Black" laminated nameplates with adhesive backplane.

G. Provide 6-inches offset for receptacles or other wiring devices mounted on opposite sides of a wall. Do not mount back-to-back.

H. All receptacle and switch boxes installed outdoors and indoors shall be of one piece. All boxes shall be provided with covers of the same manufacture as the boxes. The type of cover selected must meet the conditions imposed in every case.

I. Do not use switch boxes as junction boxes for switch and receptacle.

J. Set boxes square and true with building surfaces. Secure boxes firmly to support channels.

K. Do not mount surface mounted device and outlet boxes directly to building/structure walls. Utilize 316-stainless steel support channels, then secure/mount device and outlet boxes to the support channels. Support channels shall be per the requirements of Section 16150 "Raceways, Fittings, and Supports". All mounting hardware shall be 316-stainless steel. Additionally, refer to details shown on the PLANS.

L. Maintain symmetry of all devices as closely as possible within the Architectural Section contained. For example, center a light fixture over a doorway, or a receptacle in a section of wall, if shown in that approximate position.

M. Verify location of receptacles and switches in finished rooms. In centering devices and locating device boxes, allow for overhead pipes, and mechanical equipment; etc., and correct any inaccuracy from failure to do so without extra expense to the Owner.

N. Locate light switches on the latch side of the door. Verify door hinge location in the field prior to the switch outlet installation.

O. Cap all device boxes not used under this Contract with blank 316 stainless steel outlet covers.

P. When "gang" arrangements of outlets are employed, use 2-3/4" deep "gang" boxes of the specified manufacturer Model/Series (unless otherwise noted on the PLANS or specified herein otherwise. Note: boxes in CMU block walls shall not be less than 3-1/2" deep).

3.02 MEASUREMENT AND PAYMENT

A. No separate measurement or payment for work performed under this Section. All costs are included in the Base Bid.

END OF SECTION

SECTION 16550
GROUNDING

PART 1 - GENERAL

1.01 SCOPE

A. Provide grounding in accordance with the Plans, these Specifications and the National Electrical Code "N.E.C.". Included within this section are furnishing and installing all the wire, rods, connections, ground plates, and other devices associated with the grounding system.

1.02 RELATED REQUIREMENTS

A. Related work as called for on the PLANS, as specified herein or in other Sections of the Specifications.

1.03 SUBMITTALS

A. Submit shop drawings on all grounding system product and in accordance with Section 01300 of the Contract Specifications.

B. Submit Operations and Maintenance Manuals (O&M) in accordance with Section 01730 of the Contract Specifications. O&M Manuals shall include copies of the approved shop drawings, and on-site/field test data.

PART 2 - PRODUCTS

2.01 GENERAL

A. Grounding Electrodes: Unless otherwise noted on the PLANS, grounding electrodes shall be assumed to be ground plates. Where specifically noted on the PLANS, ground rods may be used in lieu of ground plates.

1. Ground plates shall be high conductivity copper sheet plates as manufactured by Thermoweld, Erico, or approved equal. Ground plates shall be furnished complete with manufacturer's factory attached welded pigtail conductor. Pigtail conductor size shall be equivalent to the size of the grounding conductor that terminates to the ground plate as shown on the PLANS.

   a. Ground plates installed in all areas except at ground test wells shall be 24 inch long by 24 inch wide. Minimum thickness shall be 20 gauge sheet copper, or 1/32 inch.

   b. Ground plates installed at ground test wells shall be 24 inch long by 24 inch wide by 1/4 inch thick. Ground plate shall be factory assembled with female threaded coupler attached to the ground plate via a welded bond. The coupler shall

facilitate attachment of a 3/4-inch diameter sectional ground rod to the ground test well ground plate assembly.

2. Ground rods shall be 3/4-inch diameter by 10’-0” long, copper clad steel by Thermoweld, Erico, or approved equal.
   a. Exception: Where ground rod is installed as part of an assembly with ground plate at ground test wells, ground rod shall be 3/4-inch diameter by 4’-0” long, copper clad steel sectional type ground rods by Thermoweld, Erico, or approved equal. Refer to the PLANS.

B. Connections between ground plates/rods and grounding electrode conductors shall be made below grade using Cadweld, Burndy Thermoweld, or equal thermite reaction welding system. Exception: Connections between ground plates/rods and grounding electrode conductors made inside an accessible underground Grounding System Test Well, only where noted/detailed/shown on the PLANS, shall be permitted to be made with tin-plated Bolted Ground Lug connectors as manufactured by BURNDY Type GK, or approved equal.

C. Grounding electrode conductors/wire shall be green insulated THWN-2/THHN stranded copper. Use bare copper for grounding grids only (as shown on the PLANS) only.

D. Equipment and/or static voltage and/or any other ground buses/bars (for any other type of use) called for on the PLANS and Specifications shall be tin-plated copper.

PART 3 - EXECUTION

3.01 GENERAL

A. Ground all electrical equipment, including lights and receptacles, etc., with a separate equipment ground wire installed in the conduit with the power conductors.

B. Install grounding system electrically and mechanically continuous throughout. Do not bond to the system neutral except at the building service transformer.

C. Ground lighting transformer neutrals to their housing and bond the housing to the equipment grounding conductor.

D. Connect equipment grounding conductors to ground bars or busses provided at panelboards, motor control centers, disconnect switches, switchgears, etc., from which the equipment is served.

E. Where the equipment has no facility to attach an equipment ground wire, use a Burndy Quicklug or equal. Clean the metal surface under the lug to bright metal so that good contact can be made. Repaint metal surfaces after the lug and connecting ground wires are installed.

F. Make ground connections to equipment by using ground lugs or ground bars, where they are provided. Do not make connections to equipment anchor bolts.

G. Use a thermite reaction welding system process as previously specified, by Burndy Thermoweld, Cadweld, or approved equal, to make connections to ground plates/rods; and, at any joint or connection which will be inaccessible after the construction. Exception: Connect to Grounding System Test Wells as previously specified and as also shown on the PLANS. Do not cover until each connection has been inspected by the Owner.

H. Furnish bonding jumpers as shown or as otherwise required by the National Electrical Code "N.E.C." Use stranded copper wire.

I. Inside buildings and at above ground level and through concrete floor slabs, route the ground wire(s) in PVC Schedule-80 conduit system DO NOT RUN GROUND WIRING EXPOSED AND/OR UNPROTECTED AND/OR NOT CONTAINED WITHIN A CONDUIT RACEWAY SYSTEM. Fill annular space between ground wire and conduit with Crouse Hinds, Nelson or Raychem watertight and flame-retardant sealant.

J. Connect ground wires entering outlet boxes in such a manner that removal of the receptacle will not interrupt the continuity of the grounding circuit. A grounding screw attached to the box, and used for no other purpose, may be used to accomplish this.

K. ALL GROUND WIRING CONNECTIONS/TERMINATIONS MUST BE PROTECTED AGAINST CORROSION by applying generous quantities of 3M 1601 Clear-Color Fast Drying Sealer and Insulator, or approved equal by Dow Chemical, corrosion resistant and moisture repelling Electrical Coating/spray and moisture repelling Electrical Coating to all grounding termination points inside outlet boxes, junction boxes, pull boxes, lighting fixtures, receptacle boxes, light switches, manual motor starter stations, disconnect switches, enclosed circuit breakers, combination motor starters, control panels, 480 volt motor control centers, transformers, panelboards, wireways, medium voltage switchgears, automatic transfer switches, field instruments/devices, field control stations, solenoid valves, motors, all mechanical equipment, field control panels, etc. Also, refer to Specification Section 16200 "Wiring (600 Volts and Below)".

L. Test grounding in accordance with Section 16800. Maximum resistance to ground shall not exceed 2-ohms. At no additional cost to the owner, install additional ground rods over the number required by the drawings, as necessary to accomplish the 2-ohms or less resistance.

M. Install a bonding jumper from the grounding lug of each conduit grounding bushing to the ground bar or bus of each enclosure and/or equipment housing (such as pull boxes, junction boxes, panelboards, switchgears, disconnect switches, transformers, instrument and control panels, motor control centers, etc.), as applicable. DO NOT connect equipment ground wire (routed through conduit system) to conduit grounding bushings; Also refer to details shown on the PLANS. Bonding jumper wire for conduit system grounding bushings shall be <u>STRANDED</u> bare copper wire with minimum of 19-strands. Wire size shall be in accordance with National Electrical Code "N.E.C." requirements, however, the minimum wire size permitted shall be #10 AWG.

N. Where splicing to existing phase conductors is required inside of existing underground electrical manholes and/or handholes, and/or where routing of new (proposed) phase conductors is required inside/through existing underground electrical manholes and/or handholes, install 400 amperes rated, tin-plated copper Ground Bus/Bar inside of the existing electrical manhole and/or handhole. Each Ground Bus/Bar shall be as manufactured by General Electric Company "G.E.",

Cutler-Hammer, or Square-D Company. Adhere to the following minimum assembly and system installation requirements:

1. Mount the Ground Bus/Bar with 600 volts AC stand-off isolators/insulators, as manufactured by General Electric Company "G.E.", Cutler-Hammer, or Square-D Company. The 600 volt insulators/isolators shall be spaced at a maximum distance of 12-inches apart.

2. Each Ground Bus/Bar shall have a minimum length of 2-feet.

3. Each Ground Bus/Bar shall be furnished with a minimum of twelve (12) terminals (ground lugs). Each terminal (Grounding lug) shall be tin plated copper, capable of terminating various sizes of wire ranging from #10 AWG to #4 AWG. Additionally, connect each Ground Bus/Bar directly to the grounding network of the associated Process Building Electrical Room (as shown on the PLANS), the Underground Electrical Distribution System, and the grounding system around the Electrical Manholes and Handholes. Utilize #250 AWG 600 volts GREEN insulated TYPE-THWN-2/THHN ground wires for connection to the Ground Bus/Bar.

4. Extend a dedicated equipment ground wire from each Ground Bus/Bar to each conduit system grounding bushings, cable-clamps, support channels, support systems, etc. housed inside the associated electrical manhole and electrical handhole. Do not connect/terminate more than one (1) equipment ground wire to a single terminal point on the Ground Bus/Bar. Additionally, DO NOT daisy-chain equipment ground wire from one support system, support channel system, cable clamp, etc. to another. Moreover, DO NOT connect/bond equipment ground wire of one system to another with direct ground wire connection to the Ground Bus/Bar. Each support channel, cable-clamp, conduit grounding bushing, etc. shall have its own individual equipment ground wire routed (home-run) directly to its associated Ground Bus/Bar. Wire size shall be in accordance with National Electrical Code "N.E.C." requirements, however, the minimum wire size of each of the dedicated equipment ground wires shall be #6 AWG (600 volts, green insulated wire). Also, refer to the PLANS.

O. Install 400 amperes rated, tin-plated copper Ground Bus/Bar inside of each electrical manhole (new/proposed and existing manholes), inside of each electrical handhole (new/proposed and existing handholes), and inside of each 15kV power distribution feeder pull box. Each Ground Bus/Bar shall be as manufactured by General Electric Company "G.E.", Cutler-Hammer, or Square-D Company. Adhere to the following minimum assembly and system installation requirements (Also, refer to and comply with the additional requirements shown on the PLANS):

1. Mount the Ground Bus/Bar with 600 volts AC stand-off isolators/insulators, as manufactured by General Electric Company "G.E.", Cutler-Hammer, or Square-D Company. The 600 volt insulators/isolators shall be spaced at a maximum distance of 12-inches apart.

2. Each Ground Bus/Bar shall have a minimum length of 3-feet.

3. Each Ground Bus/Bar shall be furnished with a minimum of twelve(12) terminals (ground lugs). Each terminal (Grounding lug) shall be of tin-plated copper, capable of terminating various sizes of wire ranging from #10 AWG to #4 AWG. Additionally, connect each Ground Bus/Bar directly to the Grounding Network of all the various systems as well as the Grounding System around the Electrical Manholes and Handholes,

as also shown on the PLANS. Utilize #250 AWG 600 volts GREEN insulated TYPE-THWN-2/THHN ground wires for connection to the Ground Bus/Bar.

4. Extend a dedicated equipment ground wire from each Ground Bus/Bar to each individual conduit system grounding bushings, each individual medium and low voltage cable-clamps, each medium and low voltage cable support channels, each strip of support channels, etc. housed inside the associated electrical manhole and electrical handhole. DO NOT connect/terminate more than one (1) equipment ground wire to a single terminal point on the Ground Bus/Bar. Additionally, DO NOT daisy-chain equipment ground wire from one support system, support channel system, cable clamp, etc. to another. Moreover, DO NOT connect/bond equipment ground wire of one system to another with direct ground wire connection to the Ground Bus/Bar. Each individual support channel, cable-clamp, conduit grounding bushing, each cable support channel, etc. shall have its own individual equipment ground wire routed (home-run) directly to its associated Ground Bus/Bar. Daisy Chaining of ground wire WILL NOT BE PERMITTED. Also, refer to the PLANS. Wire size shall be in accordance with National Electrical Code "N.E.C." requirements, however, the minimum wire size of each of the dedicated equipment ground wires shall be #6 AWG (600 volts, green insulated wire). Also, refer to the PLANS.

P. Install underground and/or above ground Grounding System Testing Well as shown and required by the PLANS. However, under no circumstances less one (1) underground and/or above ground Grounding System Testing Well be installed per building and process structure. Underground Grounding System Testing Wells shall be housed in an underground precast concrete pull box as detailed and called for on the PLANS. Tag each grounding electrode conductor entering the grounding system test well with the source and destination identification nameplate. Identification nameplate shall be 3-ply phenolic "Green-White-Green" nameplate. Attach nameplate to each grounding electrode conductor inside the well with plastic wire ties. The size of the lettering shall be 3/8" high Roman-Gothic Type lettering. The inscription of the destination tag on the Identification Nameplate shall be placed within parenthesis. Both inscription of source and destination tags of each grounding electrode conductor shall be placed on the same Identification Nameplate of the respective grounding electrode conductor. Each ground rod within an underground test well shall also be tagged by a unique Alphanumeric name that shall be unique within the entire plant. The tag shall have a prefix that represents the process area code within the plant, followed by a 2-digit number that represents the total count of total count of ground rods within the process area, followed by an Alphabetical number that represents the unit number of the test well within the process area.. The ground rod Identification Nameplate shall be 3-ply phenolic "Green-White-Green" nameplate. Attach ground rod Identification nameplate to each ground rod inside the test well with plastic wire ties. The size of the lettering shall be 3/8" high Roman-Gothic Type lettering. Ground rod installed within the grounding system test well shall have its end be exposed a distance of 12-inches WITHIN only the boundaries of the TEST WELL and only INSIDE the TEST WELL (i.e., when the cover of the test well is shut, the ground rod shall be concealed and be buried inside the test well). All connections between ground rods and grounding electrode conductors inside the test wells shall be made with 400 ampere tin-plated Bolted Ground Lug connections as manufactured by BURNDY type QPX, or approved equal.

Q. Grounding System Junction Box: Furnish and install grounding system junction boxes where required by the PLANS. Ground bus shall be 400 amperes rated, tin-plated copper Ground Bus/Bar. Each Ground Bus/Bar shall be as manufactured by General Electric Company "G.E.",

Cutler-Hammer, or Square-D Company. Adhere to the following minimum assembly and system installation requirements (Also, refer to and comply with the additional requirements shown on the PLANS):

1. Mount the Ground Bus/Bar with 600 volts AC stand-off isolators/insulators, as manufactured by General Electric Company "G.E.", Cutler-Hammer, or Square-D Company. Attach to enclosure backpanel.

2. Each Ground Bus/Bar shall have a minimum length of 12-inches.

3. Each Ground Bus/Bar shall be furnished with a minimum of six (6) terminals (ground lugs). Each terminal (Grounding lug) shall be of tin-plated copper, capable of terminating various sizes of wire ranging from #10 AWG to #4 AWG. Additionally, connect each Ground Bus/Bar directly to the Grounding Network as also shown on the PLANS. Utilize #250 AWG 600 volts GREEN insulated TYPE-THWN-2/THHN ground wires for connection to the Ground Bus/Bar unless shown otherwise on the PLANS.

4. Extend ground wire from the Ground Bus/Bar to each individual conduit system grounding bushings, door, etc. housed inside the associated junction box. Wire size shall be in accordance with National Electrical Code "N.E.C." requirements, however, the minimum wire size permitted shall be #10 AWG.

3.02 MEASUREMENT AND PAYMENT

No separate measurement or payment for work performed under this Section. Include cost of same in Contract price bid for work of which this is a component part.

END OF SECTION

SECTION 16600

DISCONNECT SWITCHES AND ENCLOSED CIRCUIT BREAKERS

PART 1 - GENERAL

1.01 SCOPE

A. Furnish and install enclosed circuit breakers as indicated on the PLANS and specified herein. All enclosed circuit breakers are to be molded case type, NEMA rated, and U.L. Listed. So called "International" and IEC rated circuit breakers will not be accepted even if they were to show equivalent NEMA ratings.

1.02 SUBMITTALS

A. Submit Shop Drawings in accordance with Section 01300 of the Contract Specifications. Include enclosure dimensions, ratings, wiring connection diagram and fabrication drawings. Submit protective device coordination curves and current limiting circuit breaker/fuse peak current let through curves, where applicable.

B. Submit Operations and Maintenance Manuals (O&M) in accordance with Section 01730 of the Contract Specifications. O&M Manuals shall include copies of the approved shop drawings, and on-site/field test data.

1.03 ACCEPTABLE MANUFACTURERS

Furnish units manufactured by Cutler-Hammer, General Electric Company “G.E.”, or Square-D Company.

PART 2 - PRODUCTS

2.01 DISCONNECT SWITCHES

A. Unless otherwise noted on PLANS, all electrical equipment denoted on PLANS as “Disconnect Switch” or “Disconnect” shall be the enclosed circuit breaker as described in this section of the specifications.

2.02 ENCLOSED CIRCUIT BREAKERS

A. Construction

1. Circuit breakers to have quick-make and quick-break, trip-free type operating mechanism with inverse time thermal trip and instantaneous time magnetic trip. Provide overload tripping elements in each pole. A tripped condition to be indicated by the breaker assuming a neutral position between “ON” and “OFF”.

2. Circuit breaker shall have handles with provision for padlocking in the ”OFF” position, with at least four padlocks. The locking provisions shall be such that the padlock directly interferes with the operating handle and is fully visible. Multi-pole breakers to be common trip with a single trip handle; handle ties are NOT TO BE USED. Circuit breakers shall have a dual enclosure interlock to prevent unauthorized opening of the enclosure door when the circuit breaker is in the "ON" position, or closing of the circuit breaker mechanism with the door open. All current-carrying parts to be plated through electrolytic processes.

3. Furnish lugs to terminate the incoming/outgoing field wiring as shown on the PLANS. Refer to the PLANS. Each switch to have a grounding lug for equipment ground wire connection. Lugs to be front removable and U.L. listed for copper cables.

4. Circuit breaker shall consist of two (2) form C auxiliary dry contacts. Each such contact shall be integral to the breaker and shall be mechanically interlocked with the breaker position. With the breaker in the open or tripped position, one contact in the form C assembly shall be open and the other closed. Each contact shall change to the opposite state only when the breaker position changes from open/tripped to closed or from closed to open/tripped. Each contact shall be rated at 120 volts A.C., and capable of continuously driving up to a minimum of 5 Amp inductive load.

B. Enclosures

1. Enclosed circuit breaker assemblies installed in ALL AREAS shall be enclosed in NEMA-4X Type 316-Stainless Steel gasketed cabinets. Enclosures shall have a smooth, non-brushed finish.

C. Circuit Breaker Ratings

1. Enclosed circuit breakers shall be thermal magnetic molded case circuit breakers with U.L. listed minimum RMS symmetrical short circuit current rating equal to or greater than the minimum RMS symmetrical short circuit current rating of the line-side (source) bus at 480 volts A.C. unless otherwise indicated on the PLANS). Breakers shall operate continuously, without tripping, when operating/running current is equal to 80 percent of the long time trip setting (or frame rating, as applicable) of the breakers.

2. Circuit breaker shall be three pole, 600 volt with a maximum continuous current carrying capacity as shown on the PLANS and as described in these specifications. Circuit breaker shall have a U.L. listed minimum RMS symmetrical short circuit current rating equal to or greater than the minimum RMS symmetrical short circuit current rating of the line-side (source) bus at 480 volts A.C, unless otherwise indicated on the one-line diagrams shown on the PLANS. Breaker shall be U.L. listed and shall comply with NEMA Standard No. AB1-1975 and Federal Specification W-C-375B/GEN 21a. Circuit breaker shall be fully rated and not require derating for ambient temperatures of 40 degrees Celsius or less.

3. Furnish current limiting type circuit breakers when specifically required by the one-line drawings shown on the PLANS.

4. Provide electronic trip attachment where specifically shown on the PLANS.

5. Circuit breakers shall be Square D Company Type FCL, or approved equal by General Electric Company "G.E.", Cutler-Hammer Corporation.

2.03 IDENTIFICATION

A. Each disconnect switch/circuit breaker shall be provided with identification nameplate engraved with the device name and number exactly at it appears on the one-line diagrams shown on the PLANS. Identification nameplates shall be Laminated 3-ply Phenolic, "White-Black-White", plastic nameplates with Roman Gothic 3/8-inch lettering for each unit disconnect switch/circuit breaker, attached with 316-Stainless Steel screws.

PART 3 - EXECUTION

3.01 INSTALLATION

A. Install enclosed disconnect switch/circuit breakers where the top of each disconnect switch/circuit breaker is no higher than 6-feet-6-inches above the finished floor elevation, unless otherwise noted on the PLANS.

B. Surface mount enclosed disconnect switch/circuit breaker assemblies. Use approved support channels and fittings for installations. i.e., do not mount/support any box/cabinet directly to building walls. Also, refer to specifications Section 16150 "Raceways, Fittings and Supports" and details shown on the PLANS. Use "Unistrut" or approved equal Stainless Steel channel supports and fittings for securing the installation of the enclosed disconnect switch/circuit breaker assemblies. Gauge of the Stainless Steel channel shall be in compliance to the requirements of Section 16150 "Raceways, Fittings and Supports" for Support of Electrical Equipments and Raceways. However all fastening hardware, fittings, supports, base posts, clamps, channel nuts, framing system, etc. shall be fabricated with a minimum of Type 316 stainless steel. Also refer to details shown on the PLANS.

C. Refer to specification Section 16200 "Wiring (600 Volts and Below)" for special and specific field wiring termination requirements.

3.02 MEASUREMENT AND PAYMENT

No separate measurement or payment for work performed under this Section, except as indicated below. Include cost of same in Contract price bid for work of which this is a component part.

END OF SECTION

SECTION 16800

CALIBRATION, TESTING AND SETTING

PART 1 - GENERAL

1.01 SUMMARY

A. Provide all equipment and labor required for calibration, setting and testing as described herein or otherwise required. All tests shall be witnessed by the Owner or the Owner's designated representative. Give written notification of the tests at least seven days prior to the desired date to perform the tests. Repair or replace all defective material, equipment or workmanship disclosed as a result of these tests at no cost to Owner.

B. All work, including installation, connection, calibration, testing, and adjustment, shall be accomplished by qualified, experienced personnel working under continuous, competent supervision. The completed installation shall display competent work, reflecting adherence to prevailing industrial standards and methods.

C. Tests:

The Contractor shall make all tests required by these specifications, or other authorities having jurisdiction. All such tests shall be performed in the presence of the Construction Manager or his representative. The Contractor shall furnish all necessary testing equipment and pay all costs of tests, including all replacement parts and labor necessary due to damage resulting from damaged equipment or from test and correction of faulty installation.

1.02 RELATED REQUIREMENTS

A. Related work as called for on the PLANS, as specified herein or in other Sections of the Specifications.

1.03 TEST PLAN AND TEST RESULTS

A. Performance:

Testing shall be performed in compliance with the successfully reviewed Test Plan. The Test Plan shall be submitted in accordance with the outline given below. Provide the Owner with a typewritten results of all tests, including a description of the equipment tested, the date and time of day tested, weather conditions; and test values and results.

B. Test plan:

At minimum, Submit a Test Plan for each of the Sections listed in Division 16 of these specifications. Test Plan shall be submitted at least two(2) weeks prior to the desired date and time of the test. Test Plan shall clearly identify the following, as applicable:

1. Desired date and time to perform the test

2. Name of Entity/individual that shall perform the test

3. Test procedures and recording data sheets

4. Name, description, catalog number, calibration date, and calibration entity's name of each of the test instruments to be used in executing the test

5. Expected duration of the test

6. Request for type, time and duration of any shutdown that may be required during the test.

C. Test Results:

Submit Test Results for each of the Sections listed in Division 16 of these specifications. Test Results shall be submitted no later than at least two(2) weeks after the last date of the respective test. Test Results shall be typewritten and shall include the following, as minimum:

1. All data and information provided in the Test Plan

2. Name of Entities and individuals that attended and witnessed the test

3. Weather Conditions

4. Tabulated test values and results

5. Corrective measures taken and/or to be taken toward defective material, equipment or workmanship disclosed as a result of these tests. Also include Re-Test dates and procedures for defective material, equipment or workmanship disclosed from the previous test.

1.04 GENERAL AND SPECIAL SUBMITTAL REQUIREMENT AND FORMAT:

A. Submittals shall include copies of the test results/reports. Submittals shall be per the quantity and format requirements of Sections 01300 and 01730 of the Contract Specifications.

B. Submit test result sheets and/or tables indicating product data, factory test results, field test results, quantities, physical location and reference, catalog number, reference, wiring diagram drawing number reference, cost, and any other field entered in the test resulting reports sheets and/or any other spreadsheets and/or any other table and/or listings of references/etc. Submittals shall include copies of the quantity and format required by the Contract Documents.

C. Testing Plans shall be submitted in the format required by Section 01300 of the Contract Specifications.

D. All test instrument catalog and product data sheets and/or component data sheets shall be submitted in the format required by Section 01300 of the Contract Specifications.

1.05 TEST EQUIPMENT

A. Each test instrument shall have been certified by an established calibration laboratory within the six (6) months prior to its use in testing and calibration procedures. Calibration shall be traceable to the National Bureau of Standards.

PART 2 - PRODUCTS

A. No products are required by this Section of the Specifications.

PART 3 - EXECUTION

3.01 INSULATION RESISTANCE (MEGGER) TESTS:

A. Use a minimum 1000 volt megohmeter.

B. Take each reading for at least one minute.

C. Include the following tests:

115 and 230 volt motors	…….	5.0 Megohms
460 volt motors	…….	7.0 Megohms
600 volt transformer windings	…….	100.0 Megohms
600 volt wiring up to 1000 ft.	**…….**	25.0 Megohms

D. Test all transformer windings as follows:

Primary to ground
Secondary to ground
Primary to secondary

E. Record and submit all Megger readings to the Owner/Engineer for review and record keeping purposes. Neatly type all readings and organize in a Database table form. Incremental megger readings shall also be recorded and included in the table.

3.02 GROUND RESISTANCE TESTING

A. Ground system testing shall be performed by an independent professional testing company specialized in, and well equipped to perform, ground resistance testing.

B. Take ground resistance measurements in dry weather, not less than 48 hours after rainfall, with ground under test isolated from other grounds.

C. Ground testing shall assure resistance to ground values listed in the Grounding Specification. All tests must be witnessed by the Owner or the Owner's designated representative.

D. Measure the ground resistance of each individual ground rod. Finally, measure the combined ground resistance of the entire ground grid at the end of run of each ground wire exiting the grounding grid. The same procedure and method shall be used for ground test of other secondary ground rods such as rods at corners of building structures, at light poles, at pull boxes, at/around manholes and handholes.

E. Install additional grounding/ground rods if the resistance to ground measures more than the values stipulated in the Grounding Section of these Specifications. This shall be executed at no additional cost to the Owner.

F. Submit to the owner record drawings and test reports indicating the rod and/or rods location (as applicable), the resistance measured, the soil condition at the time, any re-tests including reasons for re-tests, and time duration of each reading, overall duration of the test, and overall Technical Opinion of the Test Outcome. All tests must be witnessed by the Owner or the Owner's designated representative.

3.03 MOTORS

A. Test the insulation resistance (megger test) of all motors installed under this Contract inclusive of process mechanical drive motors and the Heating and Ventilation System drive motors such as exhaust fans, fan and coil units drive motors, etc. Test all motors in accordance to with Paragraph 3.01 above.

B. Dry out any wet insulation by use of space heaters or other approved methods.

C. Check coupling alignment, shaft end play, lubrication, and other mechanical checks as required. Follow manufacturer’s instructions.

D. Check for proper motor rotation.

3.04 RECEPTACLES

A. Test all receptacles for proper connections and grounding. Use an approved plug-in tester equal to Woodhead 1750 or Hubbell 5200.

3.05 CONTROL CIRCUITS

A. Check all circuits for continuity, proper connection, and proper operations.

B. Set all time delay relays and timers for the desired operations. Record the settings, indicating the relay or timer, its location, and the setting used. Verify all settings with a stopwatch.

3.06 LIGHTING

A. Turn on all lights after lamping them with new lamps take load readings of each circuit with lights on. Submit type-written results to the Owner. Results shall include panelboard number and location, branch circuit number and load served, and amperage reading. Balance phases on each panelboard as closely as possible.

B. Install new lamps in all fixtures just prior to final inspection of the project (following substantial completion).

C. Replace any damaged fixture or lens at no cost to the owner. Leave any protective covering on lens until the fixture is installed.

D. Allow H.I.D. lights to remain "ON" for 72-hours to check ballasts as well as lamps. Replace any defective material.

3.07 COMBINATION MOTOR STARTERS

A. Set all motor circuit protectors, all feeder circuit breakers, protective relaying system (as applicable) and all overload relays.

B. Take and record voltage and current (amperage) readings on all feeders and motors to ensure proper phase balance.

3.08 CONTINUITY TESTS

A. Perform continuity test on all low voltage conductors (600 volt, and below, wiring system). Continuity test must be performed after wiring is pulled in the conduit system and/or underground electrical system (as applicable). Continuity test must be performed on each conductor between its source and final destination (point of termination to load/device/etc.). Utilize ohmmeter for this test. Ohmmeter must be set to lowest ohm setting, 10 ohms full scale deflection.

3.09 MEASUREMENT AND PAYMENT

A. No separate measurement or payment for work performed under this Section. Include cost of same in Contract price bid for work of which this is a component part.

END OF SECTION

THIS PAGE IS LEFT BLANK INTENTIONALLY

SECTION 16825

MOTOR REHABILITATION

PART 1 - GENERAL

1.01 SCOPE

A. The Motor Rehabilitation Contractor (MRC) is responsible for the testing, diagnostics, overhaul, repair, and overall rehabilitation of existing motors for the high service pumps as shown in CONTRACT DOCUMENTS. The nameplate data of the existing motor is included in Attachment "A" of this section.

B. The MRC shall be responsible for all shipping of the motors from the OWNER's designated site to the MRC's repair facility and from the MRC's repair facility to the OWNER's designated site. The MRC shall coordinate with OWNER for specific motor to be rehabilitated. The MRC shall coordinate with OWNER and original motor manufacturer to attain a copy of any existing operation and maintenance documentation for motor to be rehabilitated.

C. The MRC shall rehabilitate the motor to a fully functional rehabilitated motor meeting or exceeding the manufacturer's specifications of original motor in accordance to the procedures as outlined in this specification section. The proposed material used in the repair of motor shall be of same or enhanced material as that of existing motor, while maintaining the manufacturer's intended motor electrical and mechanical parameters and operating characteristics.

D. The costs for all the work as identified in this specification section shall be included in the base bid, with exception to motor rotor, shaft, and core repair costs. The contractor shall clearly identify the motor rotor, shaft, and core repairs, if any, as well as associated costs, as part of the shop drawing submittal for review and approval by OWNER. Costs associated with motor shaft, rotor, and core repair shall be applied to the Additional Motor Rehabilitation bid allowance item.

E. The contractor shall be responsible for all work performed by MRC as identified in this specification section. Should MRC be unable to meet the requirements of this specification section, as identified by OWNER, then the contractor is responsible for meeting all requirements as identified in this specification section. The contractor shall be the only designated point of contact for any communication with the OWNER from/to the MRC. The contractor is responsible for conveying all information between MRC and OWNER.

1.02 MOTOR REHABILITATION CONTRACTOR (MRC) QUALIFICATIONS

As a minimum, the Motor Rehabilitation Contractor (MRC) is to have the following:

A. The MRC shall own and maintain in its repair facility a minimum of 25,000 square-ft. of space dedicated for motor testing and rehabilitation. The required square footage of 25,000 is motor testing and rehabilitation space only and is exclusive of any office spaces of the MRC.

B. The MRC facility shall have the following equipment/capabilities in-house:

1. A minimum of 25 ton hoisting capability and dynamic balancing capabilities up to 15,000 lbs.

2. A minimum 12-foot diameter Vacuum Pressure Impregnation tank.

C. The MRC shall maintain a fully equipped office/production facility with full-time employees capable of fabricating, configuring, installing, calibrating, troubleshooting, testing, and rehabilitating the motor specified herein. Qualified repair personnel shall be available and capable of reaching the facility within a 24 hour period.

D. The key personnel of the MRC that are directly engaged in the day-to-day activity of this project shall have a minimum of ten (10) years experience in testing and rehabilitation of motors similar to the motor(s) specified herein. At minimum, the experience of the key personnel of the MRC assigned to this project shall encompass specific expertise in motor inspection, testing, diagnostics, and rehabilitation in various facets of the project including administration, management, equipment repair identification, submittal preparation, proper procurement of repair equipment, equipment installation, equipment transport to/from OWNER's site, coordination with Owner/Engineer and equipment suppliers, etc. i.e., the MRC inclusive of its key personnel shall have in-house the proper resources for the testing and rehabilitation and of all efforts and elements of work required to insure proper motor rehabilitation for a fully functional rehabilitated motor meeting or exceeding the manufacturer's specifications of the original motor.

E. The MRC that wishes to provide these services on this project shall prepare a qualifications package that shall be submitted with the Shop Drawing Submittal. This qualification package must demonstrate MRC's experience in section 1.02 herein, which shall be subject to review by Owner/Engineer. The Owner will make the final determination of whether or not the MRC meets the minimum capabilities, experience criteria, and staff and facility requirements as specified herein. All decisions will be final.

1.03 REFERENCE DOCUMENTS

The references to be used in conjunction with these Specifications are the latest editions of the following:

EASA	Standards for the Repair of Electrical Apparatus
IEEE	IEEE Std. 43, Recommended Practice for Testing Insulation Resistance of Rotating Machinery
	IEEE Std. 112, IEEE Standard Test Procedure for Polyphase Induction Motors and Generators
	IEEE Std. 522, IEEE Guide for Testing Turn-to Turn Insulation on Form-Wound-Wound Stator Coils for Alternating-Current Rotating Electric Machines - For Trial Use
NEMA	NEMA Std. MG-l, Motors and Generators
ABMA	ABMA Std. 7, Shaft and Housing Fits for Metric Radial Ball and Roller Bearings
UL	UL674 Electric Motor and Generators for use in hazardous locations (where applicable for motor rated for or located in hazardous area, as identified in these specifications)

1.04 SUBMITTALS

A. Submit the following in accordance with the Section 01300 and 01730 of the Specifications.

B. MRC shall submit shop drawing submittal to consist, at minimum, of the following:

1. MRC Qualifications Package, as identified in this section of the specifications

2. Test results and report from inspection and dismantling of the motor

3. Identification of damage to the motor with supporting photographs and diagnostic data

4. List of repair requirements to the motor

5. A detailed procedure write up of proposed rehabilitation by MRC to the motor

6. Data sheets of all components and materials to be used/installed in the motor, e.g., bearings, winding wire, etc.

C. MRC to furnish Operation and Maintenance Manuals to include, at minimum, the following:

1. All items as submitted in shop drawing, reflecting all shop drawing review comments

2. Diagnostic and test results of all tests performed to motor after rehabilitation

3. Contractor to include all on site test results of motor in the Operation and Maintenance Manual.

PART 2- REHABILITATION PROCEDURES

2.01 MOTOR REHABILITATION CONTRACTOR

A. TECO-Westinghouse

B. Brandon & Clark, Inc.

2.02 INCOMING INSPECTION

On receipt of the motor, the MRC shall do the initial tests set out below:

A. Visual

A visual inspection shall be made to assess the general condition of the outside of the motor for cracks, broken welds and missing parts. Digital photographs (minimum 5 megapixel resolution) of existing conditions shall be taken and provided to the OWNER.

B. Insulation to Ground

An insulation resistance test to ground shall be performed, at a voltage suitable for the motor's voltage rating and the apparent condition of the motor. The insulation need not be tested if it is obviously defective. The testing shall be as follows:

1. The initial test voltage up to 1,000 volts and shall not exceed 1.5 times the insulation rating for insulation rated over 1,000 volts.

2. The duration of the insulation test shall be one minute. The temperature and the humidity shall be recorded.

C. Bearings

The shaft shall be manually rotated, to check for any problems with the bearings or shaft.

D. No Load Run

If possible, the motor shall be run on no load, at nameplate voltage and checked for balanced currents and vibration. The readings shall be noted in the job file.

2.03 DISMANTLING

A. After the incoming inspection, the MRC shall dismantle the motor to the extent needed to fully identify existing motor conditions and repair the motor. Digital photographs (minimum 5 megapixel resolution) of existing conditions shall be taken of motor components, particularly those requiring repair, and provided to the OWNER.

B. End brackets and frames shall be clearly match-marked.

C. Bolts and small parts shall be stored in dedicated containers and parts from other jobs shall not be kept with them.

D. If the motor has insulated bearings, note which, if any, have the insulation deliberately bridged. The insulation resistance of each insulated bearing shall be at least one megaohm with a 500 volt test.

E. If dowels or fitted bolts are used to ensure accurate fits, the locations of these pieces shall be identified.

F. For horizontal motors where the shaft rotor assembly is too heavy to be removed easily by hand, one or two cranes shall be used to move the shaft, with a close fitting pipe installed over one end of the shaft to act as a shaft extension. Attention shall be paid to the following:

   1. Care shall be taken that the slings do not damage the bearing surfaces or the rotor.

   2. Under no circumstances shall the stator windings be touched by any of the parts being moved.

2.04 WINDING REMOVAL

A. The MRC shall strip, clean, test and repair the winding core.

B. Winding data shall be obtained from existing motor to permit coil manufacture of formed coils.

C. A core loss test shall be performed on all stators both before and after stripping and iron repair, to check for damaged interlaminar insulation. The tests shall be performed at a flux density of 85,000 lines per square inch rms. Exciting current and watts loss shall be recorded each time, as well as a physical check carried out for hot spots. If data from previous tests are available, the results shall be compared. Testing at other flux densities may be performed if original data is available. If any areas are more than 15 ºC above the average after 10 minutes, or losses are excessive overall either before or after stripping, the situation shall be brought to the attention of the OWNER and repair methods proposed for review and written approval by the OWNER before proceeding further. For a core without any hot spots, the losses after stripping shall not be more than 110 percent of the pre-strip losses. The second core loss test should not be performed until the core has been cleaned and dried.

D. The winding shall be burned out in a controlled temperature burnout oven where the temperature is limited to 345°C (650°F) by means of fuel control and supplementary (water spray) cooling.

2.05 CORE PREPARATION

A. The stripped core shall be cleaned of all foreign material, such as insulation debris, and dried.

B. All iron damage, plus any problems indicated by the core loss tests, shall be repaired by MRC, as shall any frame damage.

C. The method of repair to damaged cores shall be documented and reported in writing to OWNER and shall be chosen from the following:

1. Selective grinding with a small sharp power tool;

2. Machining with a boring mill or comparable machine, taking care that the laminations are cut cleanly and not burred over (care shall be taken, especially on two and four pole motors, to maintain a constant air gap; on all motors, the combined rotor and stator machining shall not increase the total air gap by more than 20 percent.);

3. Separating laminations and reinsulating with spray-on interlaminar insulation;

4. Inserting split mica between the laminations; and,

5. Restacking, with deburred laminations and new interlaminar insulation.

6. Damage repairs where the winding is to be left in the motor are very difficult. A detailed plan shall be proposed to the Owner before work is commenced, and the Owner shall approve in writing prior to progress.

D. A final core loss test shall be performed as described in these specifications.

2.06 MOTOR REWIND

The MRC shall rewind the motor using the form wound coil method. The motor rewind shall meet at minimum the following requirements:

A. All materials used shall be rated temperature Class F or higher, at minimum equal to or greater than the class of the existing material of motor winding prior to repair.

B. The Vacuum Pressure Impregnation (VPI) method with epoxy resin is to be used as the method of impregnation of the winding as described in these specifications.

C. New coils shall be suitable for use with the impregnation system in use. They shall be insulated with material that will permit the resin to fully penetrate all the insulation with the pressures used. They shall all be of consistent shape. Dimensions shall be such as to permit insertion into the slots with a minimum use of force.

D. Changing the strand dimensions from original motor is not permitted and the total cross-sectional area of copper shall not be diminished from original motor winding. The new stranding must not permit buckling during the coil forming and handling processes. The modified design shall be approved by OWNER and engineer. The magnitude of the inrush and locked rotor current shall be maintained same as that per manufacturer’s specification of original motor.

E. The turn insulation shall be such that when inserted in the core, a single unimpregnated coil shall be able to withstand, from lead-to-lead, a voltage surge ranging from 350 volts times the number of turns in the coil to a maximum value of two times the crest value of the motor's line-to neutral voltage. Adhere to the IEEE Standard 522. Specifically, for a motor rated at 4,000 volts line-to- line with nine turns per coil, the test voltage would not exceed 6,500 volts.

F. Ground wall insulation shall be mica based with a protective layer over the insulation to prevent insulation damage during installation. The ground wall shall be capable, before impregnation, of withstanding an AC test voltage of the nominal line-to-line motor voltage for one minute.

G. Anti-corona paint shall be applied in and beyond the slot portion of coils in motors which originally had anti-corona paint. Unless otherwise approved by OWNER, the materials and methods shall be as originally supplied for motor.

H. Slot liners shall be used on coils without anti-corona paint if they were previously used on motor. They shall extend at least three eight's inch beyond the iron at each end. Side and bottom packing shall be used to ensure a snug fit in the slot.

I. Care shall be taken to ensure the coils are not damaged during insertion, especially in the area near the end of the slots. Excessive distortion of the coils will be avoided by leaving sufficient coils partially removed from the slots as the final coils are inserted and by waxing or heating the coil to make insertion easier.

J. The top, middle and bottom packing shall be sufficient to ensure a snug fit for the wedge.

K. The wedging, if not continuous, shall be placed in similar positions to the original factory wedging. Motors which had magnetic wedges when originally built, shall have magnetic wedges installed to maintain the performance characteristics.

L. Resistance Temperature Detectors (RTDs) shall be installed as follows (where applicable):

1. Number Characteristics: Unless otherwise specified, they shall be the same number and have the same characteristics as the original detectors (if any).

2. Dimensions They shall be at least six millimeters wide and the length shall be approximately 50 percent of the slot length. They shall be inserted in equally-spaced slots, between upper and lower coils, with packing filling the gap where the detector-is not located.

3. Location: The detectors shall be placed in the center of the slot width and in the expected hottest portion of the slot length. As far as possible, they shall be in intimate contact with the upper and lower coils.

Where required, each detector shall be installed and its leads brought out to a low voltage junction box, separate from the high voltage junction box of motor power leads, so that the detector is effectively protected from contact with the cooling air.

M. Before connecting, the entire dried winding shall be subject to a one minute Hipot test of the nominal line-to-line motor voltage for one minute and the leakage at the end of the test shall be noted. RTDs shall be grounded during this test. Each coil shall be subjected to a surge voltage. The surge voltage shall range from 350 volts times the number of turns in the coil to a maximum value of two times the crest value of the motor's line-to neutral voltage. Adhere to the IEEE Standard 522. Specifically, for a motor rated at 4,000 volts line-to-line with nine turns per coil, the test voltage would not exceed 6,500 volts.

Any coils failing any of these tests shall be replaced or repaired and the test repeated.

N. Bracing

1. The end turns shall be braced at the points of the original winding. The acceptable methods of coil support shall be:

a. Coil support rings, which shall be either fired or floating, as in the original winding, and shall be as strong as the original rings. (Magnetic material shall not be used in the rings. They shall be insulated or made of insulating material and, if necessary packing shall be put between the ring and the coil before tying the coil to the ring.

Regardless of the practice originally followed, each individual coil shall be tied to all support rings.)

b. Dacron felt spacers between the coils. (The spacers shall be of dacron felt, folded over at least once so that they are compressed during insertion. They shall be at least as deep as the coil height. Spacers cut from pre-cured sheet material shall not be used alone.)

c. An epoxy loaded rope tied inside the knuckle, of each coil and overlapping through two knuckles. (The rope shall either be new, or shall have been kept refrigerated before use.)

2. The twine used for tying shall be compatible with coils and shall not cause abrasion under movement.

O. Connections

1. All connections shall be brazed. Before insulating, the joints shall be smoothed off to avoid any sharp points which may cause corona or puncture the insulation. Joint insulation shall be compatible with the coils and resin, and shall be comprised of the following:

a. At least one thickness of flexible tape over the metal (For VPI processes, the tape shall permit resin entry);

b. At least one thickness of glass/mica compound tape for every thousand volts of motor rating;

c. A layer of protective tape overall

2. Jumpers and Leads: Jumpers and leads shall be tied to the coils and to each other wherever they come close or in contact. Dacron felt spacers shall be used where needed, to make the whole structure more rigid.

P. Vacuum Pressure Impregnation

The resin used with the Vacuum Pressure Impregnation (VPI) system shall be 100 percent reactive epoxy, with a viscosity at operating temperature, low enough to fully penetrate the tape layers and a gel time fast enough to minimize drainage. It shall be compatible with the coil insulating materials.

1. Resin Sample: To ensure quality, a sample of the resin shall have been taken and tested satisfactorily within two months before the motor is impregnated. The results of the resin tests shall be kept on file.

2. Vacuum/Pressure Levels: The vacuum portion of the cycle level shall be at 5 mm of mercury (Torr) or less, and the pressure portion of the cycle shall be at 95 psi or greater. The duration of the cycles shall be sufficient to achieve full impregnation with no voids.

3. Spare Coil: A spare coil shall be purchased with each coil order and run through the impregnation process, with one side in a fabricated dummy slot, at the same time as the main winding. A portion of this spare coil shall be shipped with the motor for later use while the other portion shall be used for internal quality control checks.

4. Two Cycles: Each winding will go through at least two vacuum pressure cycles with oven curing after each treatment.

2.07 ROTOR TEST AND REPAIR

A. Testing

The MRC shall test all rotors for damaged bars. This test shall apply a stable single-phase voltage to the stator of the assembled motor while the shaft is slowly turned through at least one revolution. Any fluctuations of stator current in excess of 5 percent shall be investigated further. Additional tests shall be performed as follows:

1. Measuring watts and power factor on single phase tests,
2. Growler tests,
3. Analysis of the amperes, volts and vibration of a loaded motor,
4. Physical examination,
5. Ultrasonic examination of the bars and end rings, and
6. Core loss tests.

B. Swaging

If inspection reveals that the bars are loose in the cage and there are no cracked or broken bars or joints, the bars shall be fixed firmly in the slots by swaging each bar at a minimum of three points along the slot. The bar shall be deformed so that it fits snugly in the slot by indentation of the top surface of the bar. It is understood that with some forms of rotor construction, this method may not be practical, and in these cases other methods may be proposed in writing for Owner review and approval.

C. Joint Repair

If it is only necessary to repair some joints, the end ring shall be removed, all mating surfaces shall be cleaned and the joints remade as described in this specification for Brazing under Rotor Test and Repair. Care shall be taken not to damage any other components during the dismantling. The length of bar extending from the rotor core shall not be changed without specific approval.

D. Cage Replacement

For cage replacement, the conductive, metallurgical and strength characteristics of both the bar and end ring materials of the existing motor shall be determined and equivalent materials used for replacement. Since changing the rotor resistance has major effects on the motor performance, no change in resistance is permitted. Any parts that are to be reused shall be cleaned and examined for defects. The new bars shall be machined to be a snug fit in the slot (i.e., some force is required to push them into the slot).

E. Brazing

The bars shall be brazed or welded to the end rings with material that is not subject to chemical attack by the contaminants for the environment of the particular motor. Brazing shall be performed as rapidly as possible in one continuous operation to minimize heating of rotor iron.

F. The joints shall be examined and tested by ultrasonic or comparable means, and the bars swaged in place.

G. Balance

The rotor shall be balanced to the tolerances listed in this specification.

H. Cast Rotor Repair

The method of repair shall be to remove the old cage by chemical means, without damaging the laminations, followed by re-barring with extruded, aluminum bars or copper bars (matching same material as original motor bars) and duplicate cast aluminum end rings using the methods described in this specification under Cage Replacement and Balancing to give the same cage resistance as original motor per manufacturer's data for the motor.

I. Iron Repairs

If laminations are damaged, they shall be replaced. Care shall be taken to ensure a consistent air gap: the total of both stator and rotor machining shall not increase the air gap by more than 20 percent. This shall be followed by balancing to the tolerances specified in the specification for rotor Balancing.

2.08 SHAFT REPAIR

A. General

If damage is indicated for motor shaft, shaft shall be replaced. If there is any risk or uncertainty in the proposed repair method/replacement, this shall be discussed with the Owner prior to proceeding.

B. Requirements

MRC shall perform all shaft repairs to address the damage of motor shaft. When the shaft repair work is completed, the shaft shall meet the following criteria:

1. It shall be straight, with a Total Indicated Runout (TIR) when measured in V blocks, of no more than specified in the EASA Standards for the Repair of Electrical Apparatus.

2. The shaft shall have no cracks. Use ultrasonic, magnetic particle, dye penetrant or other testing methods to verify this, and document in repair records.

3. The shaft shall be straight, parallel and undamaged, particularly at the bearing areas. If any measurable deviation from this is noted, it shall be repaired and documented in repair records.

4. Journal repairs shall be by plating, followed by machining and grinding. The MRC shall return the shaft to the size specified by the anti-friction bearing manufacturer for the application, or to give the correct clearance, as listed in this specification for a Babbitt bearing.

5. The TIR in the journal area of a sleeve bearing motor shall not exceed 0.013 mm (.0005 in) when measured with the shaft supported in narrow V blocks.

6. There shall be a tight fit to the rotor iron. If there is looseness, the shaft should be replaced. If the MRC believes that welding will give satisfactory results, this shall be approved by the Owner in writing.

7. New shafts shall be machined from AISI Gr. C1045 hot rolled steel or equivalent. For special applications, the repair shop and the manufacturer will consult and report to Owner.

8. In general, shaft dimension tolerances shall be within the limits specified in NEMA MG- 1, Motors and Generators sections.

9. For motors with proximity probes, the area under the probes shall have mechanical run out less than 0.013 mm (.0005 in) and total electrical and mechanical run out less than 0.018 mm (.0007 in). Grinding and demagnetizing may be needed to achieve this.

2.09 ANTI-FRICTION BEARINGS

A. New Bearings

The MRC shall replace all Anti-friction bearings of existing motor with new bearings and of the same type as originally used. If the bearing type, size, sealing, shielding or configuration is changed, this shall be noted on the nameplate. If the original bearing race showed pitting from shaft current, the causes and remedy for this shall be identified in writing to the Owner. Submit bearing data sheets and manufacturer to Owner for review and approval.

B. Shielding, Sealing

If the method of shielding, sealing or lubricating is to be changed, indicate this in the submittal for OWNER review and approval.

C. Clearance

Unless otherwise specified by the motor manufacturer, C3 clearance bearings shall be used for all bearings.

D. Tolerances

Fitting tolerances to the journals and housings shall be to the recommendations for electric motors found in ABMA Std. 7.

E. Heating

The bearing shall be heated, without use of direct flame, to approximately 182°F to permit it to be slid easily onto the shaft up to the shoulder.

F. Grease

Greasable bearings shall be lubricated as specified in the EASA Standards for the Repair of Electrical Apparatus.

G. Oil Mist

On motors which use oil mist bearing lubrication systems, care shall be taken to ensure the shaft seals are in good condition, and there are no blocked passages.

2.10 BABBITT BEARINGS (AS APPLICABLE)

A. Checks

MRC shall check Babbitt bearings for wear, clearances to the journal and housing, and damage. Abnormal wear patterns shall be noted and identified in writing to the Owner. Clearances to the journal should be within the original manufacturer's specifications if available; otherwise refer to the EASA Standards for Repair of Electrical Apparatus. Clearances outside this range shall be identified in writing to the Owner for OWNER approval. There should be no separation of the babbitt from the backing material.

B. Repair

MRC shall fix minor problems of bearing by machining, scraping and polishing, followed by rechecking. Other problems shall be remedied by replacement or rebabbitting the bearing.

C. Rebabbitting

When rebabbitting bearings, the following shall be observed by MRC:

1. Centrifugal Casting: Centrifugal casting shall be wed with thorough cleaning and preparation of the backing metal.

2. Lead Free: The babbitt shall have high tin content and shall be lead free.

3. Bond: After initial machining, the bond of babbitt to backing metal shall be verified ultrasonically to be more than 80 percent.

4. Machine: The bearing shall be machined to the specified clearance, and oil grooves, RTD pockets and other features that were in the original bearing, duplicated.

5. Check fit: The bearing shall be checked for fit to the shaft by bluing and checking the contact pattern after assembly, rotation and dismantling of the bearing. The bearing shall be scraped and polished until a uniform contact pattern is achieved.

6. Clearance: Clearance shall be checked with a plastigage or equivalent method, to be within the specified range.

D. Insulated Bearings

Insulated bearings shall be tested per IEEE 112, section 9.4.3.

E. Oil Rings

Oil rings shall be round within 0.025 mm (.001 in) and shall have no rough edges. Replacement rings shall be machined from the same material as the original rings.

2.11 END BRACKETS

A. Requirements

End brackets should be snug fits to the stator frame. Worn dowel holes and rabbit fits shall be repaired.

B. Clearances

Clearances to the outer sections of anti-friction bearings shall be within the tolerances specified by ABMA Standard 7.

C. Repairs

The MRC shall implement all repairs to any damage of the end brackets. The repairs to end brackets shall be by building up the metal and machining to size. Welding, plating and sleeving are the accepted methods. Epoxies and other compounds shall not be used for locking bearings.

2.12 OTHER DEVICES

A. Fans

MRC shall check Fans for cracks and fit to the shaft or rotor. Fans shall be firmly fixed to the shaft or rotor by the original motor manufacturer's factory method, unless there has been corrosion between dissimilar metals, in which case a new method shall be proposed to the Owner. Welding to the shaft is not permitted. Repairs to fans shall only be performed with Owner approval. New fans shall be as supplied by the original manufacturer unless the design appears to be defective, in which case, this shall be brought to the attention of the OWNER and MRC shall propose an alternate method for fan installation for review and approval by OWNER.

B. Leads

Leads shall be flexible and multistranded, and have the same cross sectional area and same or higher temperature class as the original leads, minimum of Class F. Main power and accessory leads shall be indelibly marked using the same marking systems as the incoming motor. If this is illegible, then the system described in NEMA MG- 1, Motors and Generators, Section 2 shall be used and a notice describing the system attached to the terminal box. Every effort shall be made to keep the original direction of rotation. Lugs, if used, shall be suited for the application and have all cable strands in the lug. No cable strands may be cut off or bent back to facilitate insertion in the lug. If crimp lugs are used, the correct make and style of die shall be used for the particular lug, and the correct compression applied.

C. Junction Boxes

Junction boxes shall be returned to original condition. In particular, the following items must be confirmed:

1. Missing bolts for both the cover and the motor-to-box joint shall be replaced.

D. Space Heaters

Space heaters, where installed, shall be tested for insulation resistance for one minute at 500 volts. A 10 megaohm resistance is acceptable. They shall be tested for correct functioning with their rated supply voltage.

E. Temperature Sensors

Temperature sensors shall be installed in the motor as originally found or as otherwise specified by Owner.

1. Winding RTDs: Winding RTDs shall be as specified in this specification section.

2. Bearing RTDs: Bearing RTDs shall be of the same type as those removed and shall be located to sense, as negly as possible, the highest Babbitt temperature. If the original bearing RTD was insulated, the replacement shall also be insulated.

F. Vibration Sensors

Vibration sensors shall be replaced in their original locations. Where non-contacting proximity sensors or eddy current probes are used, care shall be taken that they are adjusted so they do not touch the shaft.

G. Surge Equipment

1. Surge capacitors and arresters shall be tested by:

   a. Testing the capacitors' insulation resistance at 1,000 volts (normally the discharge resistor will give a reading of less than 30 megaohm);

   b. Applying a DC Hipot test to the arrester at 80 percent of its rating (it should not break down at this level. For a 4.5 kV arrester, the test voltage would be voltage = 4.5 x 1.4 x 0.8 = 5kV); and,

   c. Alternatively, using a surge tester on the windings with the surge equipment both connected and disconnected (there should be a much less steep wave front with the equipment connected.)

2. Leaking capacitors, or components which fail the tests shall be replaced.

2.13 BALANCING

A. The MRC shall balance motor rotor in a balance stand before assembly of the motor. Balance criteria include the following:

1. It shall be balanced with a half key in the keyway or with sheave or a half coupling and full key.

2. Generally, the permitted total unbalance is 15W/n/2 = oz in/plane where W is weight of rotor in pounds and N is operating speed in RPM. (426 W/n/2 gm. in/plane)

3. Two Pole rotors should be balanced to 6W/n/2 = oz.in./plane. (170.4 W/n/2 gm. In/plane)

4. If material is removed, structural integrity and fan capacity and efficiency shall be maintained.

5. Added material shall be able to withstand the centrifugal forces and be positioned either in the manufacturer's designated positions and locked in place, or positioned in a location where centrifugal force will tend to keep the material in place. Weights may be attached to metallic parts only.

2.14 REASSEMBLY

A. The assembly of the motor by MRC is the reverse of the disassembly process and the following points shall be observed:

1. Match marks shall line up.

2. On reinsertion of the rotor, take care not to damage the journals or the stator windings. Cranes, slings and extension pipes shall be used on heavy rotors.

3. Dowels and fitted blots shall go back into the same holes that they came from.

4. Where they can be measured, all air gaps shall be within 10 percent of the average.

5. On motors with insulated bearings, the insulation shall be checked and noted.

6. On vertical motors, the lift on the shaft shall be the same as the original manufacturer’s setting, unless Owner and the MRC agree that a modified setting would give better performance.

7. Motors for use in hazardous environments shall have all the explosion-proof features maintained and verified in accord with UL674.

2.15 PROTECTIVE COATINGS

A. Motor existing paint shall be removed and the motors shall be repainted to have corrosion resistant finish suitable for severe duty operation in the adverse environmental conditions normally encountered in a pulp and paper mill atmosphere.

B. Protective coating and painting for extended life shall consist of a primer and epoxy finish coat of 4-5 mils.

C. Internal surfaces, shaft, rotor, stator iron, end bells and parts shall be covered with a corrosion resistant coating of epoxy paint or equal material of 2 mils minimum dry film thickness for increased life against paper and pulp mill adverse environmental conditions.

D. Shaft extension shall be protected with a rust preventive strippable coating capable of being peeled off or unwrapped.

2.16 FINAL TESTS

A. Insulation

Prior to running, the motor shall be given an insulation resistance test to ground in the following manner:

1. Random Wound: For random wound motors, a DC high potential test shall be conducted as specified in NEMA MG-1, chapters 3 and 12. Readings corrected to 40ºC, which are less than 100 megaohms, shall be documented and reported to Owner.

2. Form Wound: For form wound motors, a polarization index test at 1,000 volts DC for 10 minutes shall be performed. Corrected readings less than 500 megaohms, or polarization indexes less than two, shall be documented and reported to Owner.

3. Withstand: For form wound motors, a DC withstand test at two times the nominal voltage, plus 1,000 volts, shall be carried out for one minute. Thus, for a 4,000 volt motor, the withstand test shall be 9,000 volts for one minute. Alternatively, an AC test voltage of 70 percent of the DC level may be used.

B. Running Test With No Load

After the insulation tests, the motor shall be run at no load at full terminal voltage, with either a half key or a half coupling, on the shaft. If the motor uses an external oil supply and removal system in normal use, a similar system shall be arranged for the test. The test shall determine and document in a report furnished for review and approval by OWNER the following:

1. No Load Amps: No load current imbalance at balanced rated voltage shall be less than 2 percent.

2. Vibration: horizontal, vertical and axial readings shall be taken at each bearing and furnished with the report. Tolerance shall not exceed EASA Standard 6.4.6.3 Quality Grade A.

3. Temperature Rise: Temperature rise after 15 minutes running, and another set of readings after one hour of running or until levels stabilize. The temperature rise shall be

within manufacturer's stated limits on the frame and bearings. All final RTD readings shall be recorded.

4. Insulated Bearings: On motors with insulated bearings, the voltage of the uninsulated bearing shall be checked. If the voltage is more than 0.1 volts, AC or DC, the bearing insulation shall be rechecked and, if not corrected, replaced.

5. Magnetic Center: On motors with sleeve bearings, the magnetic center location shall be verified and oil ring rotation confirmed.

C. Running Test With Load

1. Locked Rotor Amps: current draw under locked rotor condition

2. Motor characteristics: Provide speed versus torque, speed versus current draw, and speed versus power factor curves for motor at speeds ranging from 0% through 90% percent in 5% increments, and from 90% through 100% in 1% increments. Provide current draw versus load, efficiency versus load, and power factor versus load curves, in maximum increments of 10% from 0% to 115% of full load. Identify full load value.

3. Temperature and Vibration: Repeat temperature and vibration tests as identified for the no load case under motor full load conditions.

D. At the completion of the test, the motor shall be drained of any oil used for the test, painted and prepared for shipment. Refer to Protective Coatings in this specification. Any drained oil sumps shall be marked with a tag advising to refill the sump before operation. Oil and coolant inlets and outlets shall be plugged and masked before painting and shipping.

E. Block Shaft Motors shall have their shafts blocked to prevent axial and radial movement during shipping. The MRC shall package the motor for shipping so as not to inflect any damage to rehabilitated motor in the process of transport and in setting motor in its final location at the OWNER's site, as indicated by OWNER.

F. On Site Test Run

1. Once the rehabilitated motor is on site, the contractor is to furnish and install oil to motor, as required, and to couple the motor to a centrifugal pump load, as designated by OWNER, and perform a test run of motor for the duration of 24 hours, during which time motor power draw, volts and amps for each phase, vibration, and temperature of the motor shall be observed and recorded at a minimum interval of 4 times per hour by contractor.

2. Contractor shall furnish all labor and material/instruments for such monitoring. Contractor is to monitor vibration of motor casing and for each bearing. Contractor is to monitor temperature for each bearing and the stator.

3. Once the motor operates to the satisfaction of OWNER, the contractor is to decouple the motor from the load and place the motor at a location, as indicated by OWNER, as a spare motor.

4. During the on site test run of the motor, should the motor not operate to the satisfaction of the OWNER, the MRC shall, at no additional cost to the OWNER, rehabilitate the motor to the OWNER's satisfaction. If necessary, the MRC shall transport motor back to its repair facility to perform the necessary repairs and transport back to OWNERs designated location at no additional cost to the OWNER. The contractor shall, at no additional cost to the OWNER, perform another on site test run of rehabilitated motor after MRC repair.

5. After on site test run completion, contractor shall coordinate with OWNER for removal of any oil used for the test of rehabilitated motor.

6. It is permissible for the MRC to perform motor coupling/decoupling with load, oil install/removal, and monitoring of rehabilitated motor on site test run in lieu of contractor.

PART 3 - QUALITY CONTROL

3.01 MEASURING INSTRUMENTS

A. Calibration

All measuring instruments shall be calibrated regularly. The calibration records shall be available for Owner inspection. Minimum frequency of calibration shall be annually, except:

1. Insulation Testers Insulation resistance testers - every three months to a known resistance (battery-powered units shall be checked for battery condition before and after each set of readings);

2. Dimension Meters Micrometers, vernier calipers and other dimension measuring devices - every three months; and,

3. Bore Gages Bore gages shall be calibrated to a certified standard before and after each use.

B. Storage

All measuring equipment shall be stored in a clean dry place.

3.02 MATERIALS

A. Anti-Friction Bearings

1. Anti-friction bearings shall be the same type as originally used, unless otherwise approved by Owner. In general, only metallic cages shall be used.

2. Bearings shall be stored in their factory packaging in a clean, dry, vibration free location.

B. Solid Insulation

1. Insulating materials such as slot liners, tapes and phase insulation shall be rated for the temperature class of the motor and shall be compatible with the resins used.

2. Specifications for the materials shall be obtained from the material supplier and kept for checking their suitability for the application.

3. The materials shall be stored in a clean, dry location. Material such as B stage tape that degrades with time at room temperature, shall be kept refrigerated.

C. The manufacturer's material specifications for resins and varnishes shall be kept on file, to permit checking for correct storage, handling and usage. A sample shall have been taken and analyzed to be satisfactory within two months of its being used on a motor.

D. Other Materials

Other materials shall be new and of good quality. In particular the following shall be confirmed:

1. Lead Wires: Lead wires shall be multi-stranded and flexible with insulation rated for the temperature and voltage class of the motor.

2. Magnet Wire: Magnet wire for random-wound motors shall be compatible with the other insulation system components and shall be insulated with a polyamide, polyimide or a combination of both, over a polyester base coat, or equivalent. Any wire damaged in storage or working shall be replaced. The manufacturer's specifications for the insulation shall be kept on file for reference.

3. Formed Coils: All the formed coil supplier's quality assurance data shall be supplied with the coils and a copy provided to the OWNER.

3.03 TESTS AND INSPECTION DURING WORK

A. Records

Records shall be kept of all tests and inspections carried out during the work. Signed copies of these records shall be shipped in original form, at the same time as the motor, to the Owner's designated contact person.

B. Access

Owner shall have access to the repair facilities at all times that work is being done, for the purposes of checking progress and inspecting the work.

3.04 FINAL INSPECTION AND TEST

A. Owner shall be informed when the final inspection and testing of the motor is to take place. Owner shall be present for witness of tests on any motors.

B. All final inspection and test results shall be compiled and submitted to the Owner for review and approval. Upon review of test and inspection results, OWNER shall reserve the right to perform additional motor tests, re-test the motor, and/or perform additional repairs to the motor to the satisfaction of the OWNER at no additional cost to the OWNER.

PART 4- EXECUTION

4.01 GENERAL

A. The MRC shall furnish all labor, materials, equipment, and incidentals required to rehabilitate each motor in accordance with this specification section, without subcontracting any of the work.

B. B. The MRC shall be responsible for ensuring that each motor is rehabilitated and fully operational to original manufacturer requirements and recommendations in accordance with best industry practice.

4.02 MEASUREMENT AND PAYMENT

No separate measurement or payment for work performed under this Section, except as indicated below.

Include cost of same in Contract price bid for work of which this is a component part.

ATTACHMENT "A"

MOTOR SCHEDULE FOR HIGH SERVICE PUMP STATION

A. DESCRIPTION OF EXISTING PUMP MOTORS

Pump Tag ID	HSPS-HSP-023	HSPS-HSP-024	HSPS-HSP-026
Motor Manufacturer	Allis Chalmers	Allis Chalmers	TECO-Westinghouse
Motor Serial Number	46331-2	46331-3	4065AA-02
Motor Size (HP)	1500	1500	1500
Full Load Speed (rpm)	1900	1900	1900
Rated Voltage (volt)	4160	4160	4160
Full Load Current (amp)	183	183	183
Motor Cooling Method	Air Cooled	Air Cooled	Water Cooled
Installation Year	1973	1973	1984

END OF SECTION

THIS PAGE IS LEFT BLANK INTENTIONALLY

SECTION 17100

PROCESS INSTRUMENTATION AND CONTROL SYSTEM PICS

PART 1 - GENERAL

1.01 SCOPE

A. Provide all labor, materials, and equipment to design, furnish, install, calibrate, test, adjust, and place in operation the facility monitoring and control system as specified herein and as shown on the PLANS.

B. The PLANS and Specifications show and specify those features required to illustrate and describe functional requirements of the monitoring and control system.

C. A single Instrument and Control System Contractor (ICS) shall furnish all services and equipment defined herein and in other Specification sections as listed below under Related Work. These services include but not limited to furnishing the design, equipment, installation, calibration, programming, checkout, required documentation, maintenance, etc. for the entire instrumentation and control system as specified herein and in Division 17 of the Specifications. The Instrument and Control System Contractor is referred to herein and after (in Division 17 of the Specifications) as the ICS, ICS supplier/firm, or Contractor.

D. The **ICS** shall also:

1. Terminate and tag all field wiring associated with the process instrumentation and control system shown on the PLANS and specified herein and in other Specification sections listed below under Related Work. This includes termination and tagging of instrumentation and control system wiring within, inside and at:

   a. Modifications to the existing Main Instrument and Control and PLC Cabinet named on the PLANS as "RTU-24" located in the High Service Pump Station.

   b. Modifications associated with the existing 480V Low Voltage Motor Control Centers, and other power distribution/control equipment as shown on the PLANS

   c. All the mechanical equipment

   d. I&C wiring field termination junction boxes.

   e. Field mounted Control Stations/Control Panels

   f. Field mounted instruments and control/sensing devices such as pressure transmitters, flow transmitters, process variable indicators and sensors, machine monitoring sensing devices, etc.

   g. All Distributed Control System (**DCS**) system wiring and cables. Including extension and termination of the Modbus^{+} network, fiber optic network, remote I/O wiring, etc.

2. Tag Instrumentation and control wiring/cable and Fiber-Optic cables per the requirements and methodology/scheme outlined in specifications *Section 16200 "Wiring (600 volt and*

Below) paragraph 3.03 "Wire Tagging Methodology" and per the most recent wire tagging requirements of the City of Austin Water and Wastewater Utilities.

3. Calibrate, set and test the **PICS** equipment, components, cables, hardware, and software.

4. Provide special additional services during installation, including:

   a. Verifying that the following are furnished and installed:

      1) Correct type size, and number of signal wires with their raceways.

      2) Correct electrical power circuits and raceways

      3) Correct size, type, and number of PICS related pipes, valves, fittings, and tubes.

      4) Correct size, type, materials, and connections of process mechanical piping for in-line primary elements.

   b. Required submittals.

   c. Equipment and ancillaries.

   d. Instructions, details, and recommendations to, and coordination with, all other installation entities for Certificate of Proper Installation.

   e. Certifying readiness for operation.

   f. Starting up.

   g. Testing.

   h. Training.

5. For equipment not provided by the ICS, but directly connected to the PICS:

   a. Obtain manufacturer's information regarding installation, interface, function, and adjustment for equipment from the Contractor.

   b. Coordinate with Contractor to allow required interface and operation with the PICS.

   c. Verify that installation, interfacing signal terminations, calibration, and adjustments have been completed in accordance with the manufacturer's recommendations.

   d. Test to demonstrate the required interface and operation with the PICS

   e. Examples of equipment in this category include, but are not limited to the following:

      1) Motor Control Centers

      2) Process/Mechanical Equipment.and Packaged Control Systems

      3) Motorized Valve Operators

      4) Irrigation Pumping System Controls

6. If required for the project per specification section 17600, provide equipment, software, and services for the installation of the **DCS** configuration system at the Engineer's *Austin, Texas* office.

7. Assist Engineer, as specified in applicable **DCS** subsystem specifications sections, in Applications Software Development which shall be provided by Engineer for the **DCS** and **PC**s (as applicable).

1.02 RELATED WORK AND EQUIPMENT SPECIFIED ELSEWHERE

A. Division-16 ELECTRICAL SPECIFICATIONS

B. Division-17: INSTRUMENTATION AND CONTROL SPECIFICATIONS

C. All other Divisions of the Specifications related to the installation of the process mechanical equipment, etc. that are related to the operation of the instrumentation and control system.

D. Related work as called for on the PLANS, as specified herein or in other Sections of the Specifications.

1.03 ACCEPTABLE INSTRUMENT AND CONTROL SYSTEM SUPPLIERS AND INSTALLERS (ICS)

As minimum the ICS firm to have the following:

A. The **ICS** firms shall have in-house capability to prepare all necessary component drawings, system drawings (loop diagrams) and installation, operations and maintenance manuals.

B. The **ICS** firm shall have in-house capability to coordinate design and selection of all components in the instrument and control system. It is understood that the **ICS** firm shall understand and review the design of the entire process instrumentation and control system PICS and not just trace the PLANS. It is also understood that the **ICS** firm shall review all the components, equipment, and software/hardware specifications and prepare detailed purchase orders that will assure the proper features are furnished on each component that will comply with the intent of the Specifications and function as required in the individual system as designed and specified by the Engineer.

C. The **ICS** firm and the key personnel of the **ICS** firm that shall be directly engaged in the day-to-day activity of this project shall have experience in manufacturing and installing complete instrument and control systems for water and wastewater facilities that are similar in scope and value as that proposed for this project. At minimum, the experience of the key personnel of the ICS firm assigned to this project shall encompass specific expertise in instrumentation and control systems of water and wastewater facilities in various facets of the project including administration, management, equipment selection, equipment submittal preparation, proper procurement of equipment, instrument and control panel layout and integrated component/equipment arrangement and wiring, equipment installation and procurement, coordination with Owner/Engineer and equipment suppliers, production of detailed installation/loop/ wiring/etc. drawings, ….etc. i.e., the **ICS** firm inclusive of its key personnel shall have the proper resources for the preparation and installation of all efforts and elements of work required to insure proper system setup, proper system operation, and successful completion of this project. An acceptable **ICS** firm shall have the following minimum qualifications:

1. The **ICS** firm shall have a minimum of five (5) years experience in providing, integrating, installing, testing, and start-up of similar systems as those required for this project.

2. The **ICS** firm Site Representative shall have a minimum of eight (8) years experience installing similar systems as those required for this project.

3. The **ICS** firm Start-up and Testing Team Members shall have a minimum of three (3) years experience in testing systems similar to those required for this project.

D. The ICS firm shall own and maintain in its headquarter facility a minimum of 4000 square-ft. of manufacturing space dedicated for layout and manufacturing of control panels and associated wiring and integrated systems. The required square footage of 4000 is manufacturing space only and is exclusive of any office spaces of the ICS firm.

E. The ICS shall maintain a fully equipped office/production facility with full-time employees capable of fabricating, configuring, installing, calibrating, troubleshooting, and testing the system specified herein. Qualified repair personnel shall be available and capable of reaching the facility within a 24 hour period.

F. ICS firms that wish to provide these services on this project shall prepare a qualifications package that shall be submitted to the Owner/Engineer for approval. This qualification package must demonstrate ICS's experience in Paragraphs 1.03A through 1.03E herein, which shall be subject to review and approval by Owner/Engineer. The Owner will make the final determination of whether or not the ICS meets the minimum capabilities, experience criteria, and staff and facility requirements as specified herein. All decisions will be final.

1.04 SPECIAL CONDITIONS

A. All components shall be used in the instrument and control systems shall be new (not used) and the current model produced by the manufacturer.

B. All equipment of a common type shall be the product of a single manufacturer.

1.05 SUBMITTALS

A. General: Do not design, manufacture, or ship any **PICS** equipment until all related submittals have been reviewed by Engineer. Submit shop drawings and product data in complete functional packages; i.e., submit all shop drawings and product data for a given loop or subsystem together as a functional package. Piecemeal submittals not organized by systems or incomplete submittals for a given loop or subsystem will not be accepted. Drawings shall be neat, legible, and on 2 feet x 3 feet sheets.

B. Comply with the requirements outlined in ***Subsection 1.07*** (below) "*Special Submittal Requirements.* Additionally, Submit shop drawings in accordance with *Sections 01300 and 01730* of the Contract Specifications and as specified below:

1. Prior to the first shop drawing submittal, provide certification that ICS firm has completed the design and taken into account all interrelationships of the specific instruments proposed; and that the design accomplishes the functions described herein and shown on the PLANS.

2. Loop Diagrams: Prepare loop diagrams in accordance to the format shown on the PLANS.

3. Control Cabinet Wiring and Piping Diagrams.

4. Field Wiring and Piping Diagrams:

5. Ladder Diagrams and Control Schematics: Ladder diagrams shall also include interconnections with remotely located and/or existing devices such as motor starters, control valves, flow loops, etc. These diagrams shall be thorough and complete in all aspects. Diagrams shall present/show all control components, pilot devices, terminal block numbers, wire numbers, etc. that are part of the control logic of a single piece of equipment shall be controlled, yet, are not necessarily located in the main instrument control panel and/or the PLC cabinets. Example: control power transformer of each equipment, phase monitors, protective relays, motor space heater, starter coils, overloads, etc. Diagrams shall show these remote devices along with the actual terminal block numbers, wire number, etc., that are utilized within the remote cabinets/equipment in which they are installed and furnished by others. The ICS firm shall obtain all necessary information from the respective remote equipment supplier and/or existing field sensors/instrument which are scheduled for reuse to properly complete these drawings (such as wiring diagrams from process/mechanical equipment manufacturer, 15kV switchgear manufacturer, motor control center manufacturer, HVAC equipment manufacturer, Air scrubber equipment manufacturer, etc.). Prepare ladder diagrams and control schematics in accordance to the format shown on the PLANS.

6. Although typical control schematics are presented on the PLANS (refer to the PLANS), the Contractor shall generate specific equipment control schematic drawings (i.e., individual control schematic drawings dedicated for each specific equipment) based upon the typical control schematic, the device identification/tag replacement schedules shown on the PLANS, and the additional requirements described herein. The Contractor generated specific equipment control schematics shall follow the same overall presentation format as the typical equipment control schematics/instrument loops presented on the PLANS. The specific equipment control schematics, complete with all specific equipment/device tags, wire codes, terminal block numbers, (as a minimum, also refer to the additional requirements described herein), etc., shall be generated by the Contractor and included with the project submittals (i.e., prior to equipment purchase) and the "As-Built" drawings. Any Contractor generated control schematic shown as applicable to multiple equipment shall not be accepted. Prepare ladder diagrams and control schematics in accordance to the format shown on the PLANS.

7. All loop diagrams, ladder diagrams, control schematics, etc., shall be generated with terminal block numbers, wire numbers, rung numbers with unique prefix letter(s) for each equipment diagram/schematic, and rung number references for each contact and be complete in all respects. It is anticipated that all wire numbers cannot be accommodated on the loop diagrams, ladder diagrams, control schematics, etc. format shown on the PLANS. As a minimum, to facilitate the depiction of the wire numbers on the loop diagrams, ladder diagrams, control schematics, etc., the Contractor shall generate and include uniquely identified alpha-numeric wire codes on the loop diagrams, ladder diagrams, control schematics, etc. The wire codes shall cross-reference tables of wire numbers shown on additional drawings that shall be generated by the Contractor. At minimum, the Contractor shall generate the wire codes and the cross-reference tables which depict the wire numbers associated with each wire code and shall group the cross-

reference tables by specific equipment (Jet Mixing Pump No. 1, Jet Mixing Pump No. 2, Jet Mixing Pump No. 3, etc.). As a minimum, the Contractor shall generate drawings to depict the wire code and wire tag cross-reference tables and these drawings shall also be grouped by specific equipment (Jet Mixing Pump No. 1, Jet Mixing Pump No. 2, Jet Mixing Pump No. 3, etc.). Additional requirements concerning the cross-reference table headings, table organization, wire code generation, formatting, etc., shall be provided by the Owner during the Pre-Submittal Conference specified hereinafter (refer to subsection 1.08, this Section of the Specifications) and the Contractor shall incorporate these requirements at no additional cost to the Owner.

8. The Engineer shall develop and provide to ICS a listing of all PLC I/O points Software Tags used on this project in electronic, Microsoft Excel Format. The ICS shall incorporate the software tag of each PLC I/O point onto the respective PLC I/O point depicted on the CAD drawings, including but not limited to, loop diagrams, PLC I/O schematics, ladder diagrams, control schematics, etc., in the development of the drawings provided as part of the Operation and Maintenance Manuals. ICS shall coordinate with Engineer to request the PLC I/O point Software Tag listing after all PAT activity for the respective area is completed.

9. Submit detailed product data for each item of equipment and material:

10. Submit four copies of the following reports:

    a. Factory calibration reports.

    b. Installation inspection reports.

    c. Field calibration reports.

    d. Field system test report.

11. Operation and Maintenance (O&M) Manuals:

    a. Content and Format:

        1) Complete sets of separately bound O&M manuals for each **PICS** Subsystem.

        2) Sufficient detail to allow operation, removal, installation, adjustment, calibration, maintenance and purchasing replacements for each **PICS** component.

12. Testing Related Submittals: Submit the following for each of type of test required under Division 17 of the Specifications:

    a. Preliminary Test Procedures: Outlines of proposed tests, forms, and checklists.

    b. Final Test Procedures: Proposed test procedures, forms, and checklists.

    c. Test Documentation: Copy of signed off test procedures when tests are completed.

1.06 OPERATION AND MAINTENANCE MANUALS

A. Furnish and submit Operation and Maintenance manuals in accordance with Section 01300 and 01730 of the Contract Specifications. Additionally, provide Operation and Maintenance manuals in electronic format per the requirements of Section 01730 of the Contract Specifications.

Include approved shop drawing data in the Operation and Maintenance manuals and including the following contents:

1. Information as specified in Paragraph 1.05 with the following modifications to the shop drawing exhibits:
   a. Reflect "As-Built" conditions.
   b. Prints of exhibits, wiring diagrams, etc. shall be half size (11 x 17-inch).
   c. Full size reproducible mylars (2 x 3-foot) of all exhibits, loop diagrams, ladder control wiring diagrams, point to point wiring diagrams, etc. The same must also be submitted on **CD-ROM** produced **in AutoCAD** (latest release)**.**
2. Operating procedures.
3. Shut-down procedures.
4. Safety instructions.
5. Calibration instructions and factory test results of each instrument.
6. Maintenance and repair instructions.
7. Recommended spare parts list.
8. Name, address and phone number of instrumentation control system supplier's local representative.
9. Additionally, comply with the requirements of the Contract Documents.

1.07 SPECIAL SUBMITTAL REQUIREMENTS – APPLICABLE TO BOTH SHOP DRAWING SUBMITTALS AND OPERATIONS AND MAINTENANCE MANUALS:

A. All system layout drawings, cross sectional view drawings, wiring diagram drawings, Connection detail drawings, physical layout and detail drawings, etc. shall be developed electronically using "**AUTO-CAD Version 2007 software".** Submittals shall include hard copies (of the quantity and format required by the Contract Documents) and electronic Version in "**AUTO-CAD Version 2007";** This applies to all drawings requested in this Section of the Specifications and any other manufacturer's product standard drawings required for submittal, and ALL PRODUCT DRAWINGS TO BE SUBMITTED for this project. Electronic Version shall be submitted in a **CD-ROM**.

B. All system equipment and associated component Bill of Material sheets and/or tables indicating product data, quantities, physical location and reference, catalog number, wire tags, reference, wiring diagram drawing number reference, cost, and any other field entered in the bill of materials sheet and/or any other spreadsheets and/or any other table and/or listings of references/etc. SHALL ALL BE ELECTRONICALLY DEVELOPED IN A DATABASE FORMAT using **MICROSOFT ACCESS - 97 Software** (professional suite). This applies to all summary sheets, material listings, etc. TO BE SUBMITTED for this project. Submittals shall include hard copies (of the quantity and format required by the Contract Documents) and an electronic Version developed in **MICROSOFT ACCESS – 97**. Electronic version shall be submitted in a **CD-ROM**.

C. AUTOCAD drawings shall be developed in full adherence to the formats and drawing standards developed by the City of Austin. A copy of the AUTOCAD DRAWINGS STANDARDS MANUAL SHALL BE OBTAINED FROM **AUSTIN WATER UTILITY**.

1.08 PRESUBMITTAL CONFERENCE

A. Schedule, arrange and conduct a presubmittal conference for the entire **PICS** within 90 days after receipt of written notice to proceed work is given by the Owner.

B. The presubmittal conference shall be attended by representatives of the Contractor, the Engineer and the ICS firm. Each attendee to allot time required for the conference.

C. The purpose of the presubmittal conference shall review the manner in which the Contract requirements will be met before any submittals are prepared.

D. The following items shall be presented at the presubmittal conference:

1. A list of equipment and materials required for the **PICS** and the brand shall be used for each item.
2. A sample of each type of submittal specified later herein.
3. Sample submittal drawings from similar projects previously performed by the ICS firm. Submittal drawings shall include sample wiring diagrams, cabinet elevations, bill of materials, etc.

PART 2 - QUALITY ASSURANCE

2.01 ACCEPTABLE PROCESS INSTRUMENTATION AND CONTROL SYSTEM PICS

A. Provide a complete, workable, and installed-in-place Instrument and Control System, hereinafter referred to as the PICS, as specified herein. The PICS shall be designed, installed, and started up by the single ICS firm.

B. Acceptable ICS firm shall be as required by *Subsection 1.03, above*.

2.02 SYSTEM COORDINATION AND QUALITY

A. Coordinate installation of instrumentation with mechanical and electrical systems.

B. Coordinate subsystems to provide a complete operational and functional instrumentation system to the satisfaction of the Owner and Engineer.

C. Equipment, instruments, components, and materials for PICS components shall be new (not used) and of the current model.

D. Instrument and Control Components Furnished By Others: Certain items of instrumentation and controls shall be furnished by various equipment manufacturers. Coordinate the purchase orders of the items such that the resulting system will function properly.

2.03 DESIGN CRITERIA

A. Design, construct, and install all PICS components in compliance with the applicable provisions of the following standards, codes, and regulations:

1. American National Standards Institute (ANSI) Standards.
2. American Institute of Steel Construction (AISC) Standards.
3. American Society for Testing and Materials (ASTM) Standards.
4. American Waterworks Association (AWWA)Standards.
5. Joint Industrial Council (JIC) Standards.
6. National Electric Code (NEC)
7. National Electrical Manufacturer's Association (NEMA) Standards.
8. Local and State Building Codes.
9. Occupational Safety and Health Administration (OSHA) Regulations.
10. Scientific Apparatus Manufacturer's Association (SAMA) Standards.
11. Instrument Society of American Standards (ISA).
12. Institute of Electrical and Electronics Engineers (IEEE).

2.04 PRODUCT DELIVERY, STORAGE AND HANDLING

A. Delivery: Enclose cabinets and subassemblies in heavy polyethylene envelopes to protect them from dust and moisture. Place corrosive-inhibitive vapor capsules in shipping containers, and related equipment as recommended by the capsule manufacturer.

B. Storage: All materials and equipment shall be environmentally protected and stored in climate controlled (temperature and humidity, etc.) environment.

2.05 CALIBRATION INSTRUMENTS

A. Each instrument used for calibrating PICS equipment shall bear the seal of a reputable laboratory certifying that instrument has been calibrated within the previous twelve (12) months to a standard endorsed by the National Institute of Standards and Technology (**NIST**).

2.06 START DATE OF THE DISTRIBUTED CONTROL SYSTEM "DCS" WARRANTY (PICS INCLUDING SUBSYSTEMS)

A. Start Date of the process instrumentation and control system and associated subsystem Warranty (PICS including Subsystems) shall commence the date in which the Warranty period commences for the overall project per the requirements of the Contract Documents.

PART 3 - SEQUENCING AND SCHEDULING

3.01 GENERAL

A. All work provided under this section shall be in accordance with the Engineer-approved Schedule of Submittal Submissions and Schedule of Values.

B. Specification and Construction Implementation Plan *shown on the PLANS* requires phased installation of equipment and systems.

C. Wherever language in this section refers to the "**PICS**", the entire installed **PICS**, the entire **PICS**, or similar language, it shall be interpreted to apply to the individual phases of the work; except the requirements for the Performance Acceptance Test **PAT.**

3.02 SCHEDULE OF VALUES

A. Purpose: Project Schedule of Values and Progress Schedule to provide a basis for Partial Payment for Work completed.

B. Content: Summary of major milestones and associated Partial Payments for Work provided under **PICS** Subsystems.

3.03 PICS COMPLETION

A. When Engineer issues Certificate of **PICS** Completion.

B. Prerequisites:

1. All **PICS** submittals have been completed
2. **PICS** has successfully completed **PAT**.
3. Owner training plan is on schedule.
4. All spares, expendables, and test equipment have been delivered to Owner.

3.04 PICS ACCEPTANCE

A. When Engineer issues a written notice of acceptance.

B. Prerequisites:

1. Certificate of **PICS** Completion issued for <u>the Construction Contract per the requirements of the Contract Documents</u>.
2. Instrument Installation Reports "IIR" are completed, and all deficiencies are corrected.
3. Performance Acceptance Test PAT is completed
4. Punch-list items completed. <u>NOTE: punch list items will be issued 15 Calendar days following completion of the PAT</u>.
5. Final revisions to O&M manuals accepted.
6. All Training is completed

3.05 PREREQUISITE ACTIVITIES AND LEAD TIMES:

A. Start following key Project activities when prerequisite activities and lead times listed below have been completed and satisfied:

Activity	**Prerequisite and Lead Times**
Submittal reviews by Engineer	Engineer acceptance of Schedule of Values and Progress Schedule and completion of the Pre-Submittal conference
PICS hardware purchasing, fabrication, and assembly	Associated shop drawing submittals completed
DCS system design, fabrication and assembly	Associated shop drawing submittals completed
All remaining **PICS** instruments, components, hardware, fabrication, assembly, etc.	Associated shop drawing submittals completed
Shipment	Completion of **PICS** shop drawing submittals, preliminary O&M manuals
Performance Acceptance Tests **PAT**	Application software completed by Engineer and configuration system (if required for this project per specification section 17600) shipped from Engineer location to the project site, and the Instruments Installation Report(s) "IIR" completed, and PICS Operational Readiness Tests completed, and Contractor letter notification of successful completion of PICS Operational Readiness Test and Contractor's readiness for commencement of PAT is submitted. Additionally, the Startup and **PAT** procedures associated shop drawing submittals must be completed. Note: Owner requires Four (4) weeks notice prior to start **PAT**.
Owner training	Completion of PAT.

PART 4 - PRODUCTS

4.01 GENERAL

A. Refer to requirements of PICS Subsystem provided in Division-17 Specifications.

4.02 SOURCE QUALITY CONTROL

A. General:

1. Test all PICS elements, both hardware (instruments, components, devices, PLCs, etc.) and specific software, to demonstrate that PICS satisfies all requirements.
2. On-Site Tests Described Under **PART 5 - EXECUTION**:
    a. Performance Acceptance Tests "**PAT**".
3. Procedures, Forms, and Checklists:
    a. Conduct all tests in accordance with, and documented on, Engineer accepted procedures, forms, and checklists.
    b. Describe each test item to be performed.
    c. Have space after each test item description for sign off by appropriate party after satisfactory completion.
4. Required Test Documentation: Test procedures, forms, and checklists. All signed by Owner/Engineer and Contractor.
5. Conducting Tests:
    a. All special testing materials and equipment.
    b. Wherever possible, perform tests using actual process variables, equipment, and data.
    c. If it is not practical to test with real process variables, equipment, and data, provide suitable means of simulation.
    d. Define simulation techniques in test procedures.
6. Owner/Engineer will actively participate in many of the tests.
7. Owner/Engineer reserves the right to test or retest all specified functions whether or not explicitly stated Test Procedures.
8. Owner's/Engineer's decision will be final regarding acceptability and completeness of all testing.

PART 5 - EXECUTION

5.01 EXAMINATION

A. Equipment furnished by Supplier or any other subcontractor and installed by the ICS requires Supplier to observe and advise on installation to extent required to certify that equipment has been properly installed and will perform as required.

B. For equipment not provided by Supplier, but that directly interfaces with the PICS, verify the following conditions:
    1. Proper installation
    2. Calibration and adjustment of all instrumentation and control devices.
    3. Correct control action.

4. Switch settings.

5. Opening and closing speeds and travel stops.

6. Input and output signals.

5.02 INSTALLATION

A. General:

1. Install all equipment in accordance with the PLANS and instructions furnished by the manufacturer. Inspect each new instrument, control component, etc., before installation. Replace deficient items.

2. Instruments Installation Report(s) **IIR**: After installation, the manufacturer's non-sales type technical representatives shall inspect the installation and prepare a report or reports to include the following:

   a. A list of all deficiencies found.

   b. Recommended corrective action for all facilities.

   c. Certification that the item or system is properly installed, calibrated and tested except as noted.

3. The **IIR** shall be prepared for the following instruments:

   a. Machine monitoring equipment.

   b. Flow Indicator/Transmitter Instruments.

   c. Intelligent Pressure Measuring Indicators/Transmitters.

   d. Intelligent Temperature Measuring Indicators/Transmitters.

   e. Intelligent Differential Pressure Indicators/Transmitters and/or Flow Indicators/Transmitters, as applicable.

   f. Ultrasonic Level Controllers and Transducers

   g. Pneumatic Positioners, Pressure to Current Transmitters, Current to Pressure Transmitters.

Note: The **IIR** is required in addition to all the other tests, calibration and checkout procedures required under Subsection "**Field Quality Control**" (of this Section), and other similar requirements identified in all **PICS** Subsystems Specifications (Division-17, at its entirety). The IIR must be completed and all deficiencies must be corrected by the ICS prior to commencing the PAT.

B. Wiring:

1. All wiring connected to **PICS** components and assemblies including shall be in accordance to the requirements of Division 16 and 17 of the Specifications.

5.03 FIELD QUALITY CONTROL

A. General: All requirements listed in Subsection Source Quality Control, above, also applies to this Subsection Field Quality Control.

B. Onsite Supervision:

1. The **ICS** Project Site Representative to supervise and coordinate all onsite **PICS** activities.

2. The **ICS** Project Site Representative shall be On-Site during total period required to complete all On-Site **PICS** activities.

C. Startup and Testing Team:

1. Startup and Testing Team will consist of ICS firm and equipment supplier non-sales type technical representatives. The entire Process Instrumentation and Control System PICS shall be tested together.

2. Thoroughly check installation, termination, and adjustment for all **PICS** Subsystems and their components.

3. Complete On-Site tests.

4. Complete On-Site training.

5. Provide and conduct startup services.

6. **PICS** Operational Readiness Tests (ORT): Prior to startup of the Performance Acceptance Test "PAT", the **ICS** firm shall test the **PICS** equipment and systems:

   a. Conduct the ORT with entire **PICS** installed to demonstrate that it is operational and interconnected.

   b. PICS Subsystems: each portion of the PICS Subsystem shall be tested. (entire system interconnected).

   c. **DCS** Loop-Specific Functions including discrete, analog, etc.

   d. Loop-Specific Functions for Remaining **PICS** Subsystems including discrete, analog, etc.

   e. Make following documentation available to Owner/Engineer at test site both before and during the tests:

      1) Master copy of On-Site Tests Procedures.

      2) List of equipment to be tested including make, model, and serial number.

      3) Shop Drawing hardware and software submittals for equipment being tested.

   f. Daily schedule for the Test:

      1) Begin each day meeting to review day's test schedule.

      2) End each day with each meeting to review day's test results and to review or revise next day's test schedule.

7. During the **PICS** ORT, the Contractor shall maintain a list, henceforth called the **PICS** ORT Corrective Action List, that identifies, with a detailed description, each problem found, the affected equipment, and the corrective measures taken to correct each problem. The Contractor shall submit the **PICS** ORT Corrective Action List for review if requested by the Owner and shall submit the **PICS** ORT Corrective Action List within seven calendar days of the requested date. The Contractor shall claim and validate

thorough **PICS** ORT were performed successfully and all resulting corrective action measures taken were performed successfully and re-tested successfully. Upon successful completion of the **PICS** ORT, the Contractor shall submit letter notification to the Owner stating that all **PICS** ORT have been successfully completed. The letter notification shall further state that the ICS is ready to begin the Performance Acceptance Test.

D. Performance Acceptance Tests "PAT":

1. Minimum duration of the PAT shall be a cumulative total of <u>two (2) calendar days</u>. The cumulative total quantity of calendar days shall be consumed in association and in synch with the overall construction sequence for the project. Any Holidays that occur during the PAT shall result in a corresponding number of days being added to the duration of the PAT. The PAT encompasses startup and testing period of the instrumentation and control system and the associated process and mechanical equipment that are controlled and monitored by the instrumentation and control system. The PAT shall be conducted using application software developed by the Engineer. The ICS shall test functions installed and the hard-wired system and the entire associated instrumentation and control system including validating the operation and monitoring and control functions of the all instruments, all control devices, all instrument and control components, control functions, alarm function, monitoring function, calibration ranges, control/alarm setpoint operations, etc. Owner/Engineer shall test software functions. The ICS shall also test the **DCS**.

2. Commissioning of PICS and Facility in General: The facility and the PICS along with the associated process and mechanical equipment shall not be considered ready for operation and commissioning until the PAT is successfully completed and it is completed to the satisfaction of the Owner/Engineer.

3. The ICS shall startup and test the operation of the instrumentation and control system and the operation of the associated process and mechanical equipment that shall be monitored and controlled by the instrumentation and control system. The ICS shall demonstrate that the PICS is operating as required by the Contract Documents. Demonstrate each required function on a paragraph-by-paragraph, loop-by-loop, point-by-point basis, function by function basis, event by event basis, control function by control function basis, step by step logic test basis, etc.

4. Loop specific tests except that the entire installed PICS tested using actual process variables and all functions demonstrated, as minimum.

   a. Check the PICS for proper installation, calibration, and adjustment on a component-by-component basis.

   b. Use Loop Status Report to organize and track inspection, adjustment, and calibration of each loop.

   c. Calibrations, Setting and Testing, for example, but not limited to:

      1) Analog and Sonic-Echo Devices: Actual inputs and outputs at 0, 10, 50, and 100 percent of span, rising and falling.

      2) Discrete Devices: Actual trip points and reset points.

      3) Indicators/Transmitters/Controllers: alarm and control set point as well as setpoint function tests in association with their respective interface with the control logic of the associated process mechanical equipment.

4) Closed and open loop PID type control algorithms.

5) I/O Modules: Actual inputs or outputs of 0, 10, 50, and 100 percent of span, rising and falling

5. Maintain Loop Status Reports, Valve Adjustment Sheets, and Component Calibration Sheets at Project site and make them available to Owner/Engineer at all time. The ICS shall develop project specific Loop Status Reports, Valve Adjustment Sheets, and Component Calibration Sheets and submit a sample report of each type for review by Owner/Engineer at least 60 calendar days prior to commencing the PAT.

6. Perform local and manual tests for each loop before proceeding to remote and automatic modes.

7. Complete control logic simulation and actual/live test in all modes of operations.

8. Make updated versions of documentation required for PAT available to Owner/Engineer at Project site, both before and during tests.

9. Make one copy of all O&M manuals available to Owner and Engineer at the Project site both before and during testing.

10. The Owner and/or Engineer shall witness all Tests.

11. The PAT shall be completed in coordination with the Owner/Engineer and the ICS firm.

12. Prolonged and Excessive Startup and Testing During the PAT (startup and testing period of the instrumentation and control system and the associated process and mechanical equipment that are controlled and monitored by the instrumentation and control system): If parts of a startup and testing of equipment fail and must be redone following the completion of the allotted PAT period and/or startup and testing extends past the PAT period as a result of deficiencies found in the installation of the PICS, and/or startup and testing extends past the PAT period due to prolonged test per piece of equipment resulting from Lack of complete readiness of the ICS and/or the Contractor as well as the associated systems to commence the PAT, and/or not being completely ready to perform the PAT, etc; Any additional time expended by the ICS shall reimburse the Owner for the additional time at the rate of $150.00 per hour. Additional time is defined as any-time in excess of the total number of allotted Calendar days, based on normal business working hours during the PAT period, for these costs the Engineer will document work hours and other expenses required during the additional time.

13. Final Maintenance Report: Summarizing maintenance performed during PAT:

    a. Tasks performed and person-hours required for the performance.

    b. Numbers and types of components repaired or replaced, name and address of repair firm, extent of repairs, and time required for their completion.

    c. Recommended additional components, test equipment, tools, and other facilities for maintenance not supplied under this contract.

5.04 MEASUREMENT AND PAYMENT

A. No separate measurement or payment for work performed under this Section. Include cost of same in Contract price bid for work of which this is a component part.

END OF SECTION

THIS PAGE IS LEFT BLANK INTENTIONALLY

SECTION 17200

INSTRUMENT AND CONTROL CABINETS AND ASSOCIATED EQUIPMENT

PART 1 - GENERAL

1.01 SCOPE

A. This Section covers the instrument and control cabinets that shall be furnished, installed, and put into satisfactory service which at minimum includes the following:

1. Modifications to the existing large freestanding type of Instrument and Control and PLC cabinets are required in the High Service Pump Station. Refer to the PLANS. These cabinets are shown on the PLANS as "RTU-24", "HSPS-MCP-001".

1.02 RELATED REQUIREMENTS

A. Refer to Section 17100

B. Related work as called for on the PLANS, as specified herein or in other Sections of the Specifications.

1.03 SUBMITTALS

A. Submit the following in accordance with *Section 01300 and Section 01730* of the Contract Specification and Specification *Section 17100:*

1. Shop drawings and product data.

a. In addition to the requirements noted in Specification Section 01300, submit the following:

1) Bill of materials identifying equipment/device description, manufacturer, model/catalog number and quantity provided.

2) Manufacturer's recommended wiring diagram(s).

3) Front, backpanel, interior door elevation shop drawings showing modifications to existing Instrument and Control cabinets/panels.

4) Exterior and interior elevation shop drawings for proposed control panels/cabinets. The interior backpanel elevation of proposed control panel/cabinet shall include all proposed components/hardware and associated hardware equipment schedule.

5) Control wiring schematics showing internal and external interconnect wiring between devices/components. Provide terminal blocks tags including terminal blocks terminated in field mounted equipment external of proposed/existing cabinets/panels (i.e. motor control center, flow indicating transmitter, pressure indicating transmitter, pumping unit control station, etc.) obtained from equipment submittals.

6) Sample wire tags for all types of interconnect and field wiring from the proposed/existing cabinets/panels. After approval of the example wire tags, a wire tag table showing all provided wire tags shall be submitted in a separate submittal for review. Refer to Specification 16200 Subsection 3.03 for wiring tagging methodology.

7) Loop wiring schematics showing interconnect wiring between **devices/components.**

8) Provide individual control logic and loop wiring schematics with appropriate equipment/device tags; typical schematics are not acceptable.

9) Spare parts listing.

2. Operation and maintenance manuals.

a. As minimum, provide the following:

1) Final approved versions of all shop drawing submittals.

2) As-built product data and shop drawings/wiring diagrams reflecting deviations approved through change orders and/or requests for information/deviation.

3) Product data and manufacturer's recommended wiring diagrams.

4) Field calibration and system test reports.

5) Component Manufacturers' O&M Manuals including manuals to cover installation, operation, maintenance, troubleshooting, and calibration.

6) List of spare parts and expendables provided and list of spare parts recommended.

1.04 TOOLS AND SPARE PARTS

A. Furnish the following spare parts with the equipment for each Main Instrument and Control Cabinet (MCP) in conformance with the specifications:

1. One set (minimum 3) of fuses for each type and size used.

2. One set (minimum 3) of Circuit Breaker Overcurrent Protection Devices for each type and size used..

3. Twenty (20) terminal blocks of each color and type used.

4. Four (4) 120VAC control relay assemblies for each type used. Each assembly shall be fully assembled and furnished complete with:

a. The relay coil,

b. Four(4) Normally Open (N.O.) contacts, and

c. Four(4) Normally Closed (N.C.) contacts.

d. Relay Manufacturer's Transient Voltage Suppression Module.

5. Two (2) 24VDC control relay for each type used assemblies complete with accessories.

6. Four (4) Timing relays for each type used, each complete with the relay socket base assembly.

7. Four (4) complete Instrument Loop Current Isolators (I/I Converters) for each type used.

8. Two (2) indicating transmitter alarm controllers for each type used complete with input and output signals and relay outputs.

9. 25% spare push-buttons, selector switches, indication light assemblies for each type used (minimum of 2 per type).

10. 50% of spare lenses and lamps for each type and color size and type used (minimum of 4 per type).

PART 2 - PRODUCTS

2.01 GENERAL CONSTRUCTION REQUIREMENTS FOR INSTRUMENT AND CONTROL CABINETS/PANELS

A. The various instrument and control cabinets/panels shall be constructed to the approximate dimensions and instrument arrangement as shown on the PLANS. The Engineer will review alternate arrangements and recommendations.

B. For proposed cabinets, cabinet doors shall be furnished and installed in the locations shown on the PLANS. Cabinets shall have door in front and may have instruments mounted on front face of cabinet, as shown on PLANS.

C. All instruments, devices and wiring shall be arranged such that everything can be installed, removed and serviced through the door. Cabinets shall be of the approximate size as shown on the Plans. Alternate arrangements of equipment will be reviewed by Engineer upon recommendations (if any) by the manufacturer.

D. Wire entering the cabinets shall enter through the floor, the side and/or the top of the cabinets via conduits with bushings or hubs. All wiring shall be terminated on terminals located on an interior panel prior to being connected to any instrument or switch. All internal wiring shall be accomplished by the **ICS** prior to shipment. All wiring and terminals shall be clearly marked and wiring schematics furnished. All wiring shall be neatly bundled, laced together and routed as required throughout the cabinet.

E. For proposed panels, the exterior of each panel shall be painted *Medium Gray with textured finish*. However, Manufacturer furnished samples of the specified paint color and finish, in addition to other available paint colors and finishes shall also be submitted for final selection by the Owner.

F. For proposed cabinets, cabinet doors shall have heavy gauge continuous hinges. Hinges and doors shall be capable of supporting weight of equipment mounted on doors.

G. Mounting channels and interior panels shall be provided in the cabinets for mounting terminals, relays, etc.

H. For proposed cabinets, the cabinet shall be completely assembled and wired at the factory such that installation can be accomplished by connecting field wiring to terminal strips located in the panel.

I. Each cabinet section shall be furnished with a minimum of two (2) ground buses/bars, isolated and non-isolated ground bars. The isolated ground wiring ground buses/bars shall be supported/bolted to the control cabinet through 600 volt isolators. Each ground bus/bar shall be furnished with the required number of terminals for proper wiring in addition to 20% spare terminals for future connections. Do not connect/terminate more than one (1) isolated or distorted ground wire to a single terminal point on a ground bar/bus. Certain microprocessor based control equipment will require the connection of both distorted and undistorted (isolated) ground wires such as Programmable Logic Controllers **PLC's, PLC** Input/Output **I/O** cards, Fiber Optic Communication equipment, etc.

J. Instrumentation and Control equipment installed in the cabinets that require isolated/clean (undistorted) ground wire terminations (in addition to distorted ground wire termination) shall be supported/bolted to the control cabinet through 600 volt isolators (i.e., electrically isolated from body/housing of control cabinets and distorted ground wires). As minimum, this requirement applies to the Programmable Logic Controllers **PLC's, PLC** Input/Output **I/O** cards, etc.

K. Mark all wiring (power, control, instrument, alarm, data, ground, shield, etc.) at each end of each wire. Use Flame-Retardant, Heavy-Duty Industrial Grade and Heat Shrinkable type wire tags approved for this use and as manufactured by **"Raychem type Heave-Duty Industrial Grade ShrinkMark Heat-Shrinkable Marking Sleeves"**. All wire tags shall be **YELLOW** in color ***Except the color*** *used for branch-circuit lighting, convenience receptacle circuits, and 120 volts AC power circuits to instrument/devices shall be* ***WHITE***. HEAT SHRINK ALL WIRE TAGS. All wire tags must be typed with an indelible marking process. Utilize **"Raychem" Portable-Marking-System" complete with wire tag cartridges.** Character size shall be minimum of 1/8" in height. Handwritten tags WILL NOT BE ACCEPTED. Minimum length of each wire tag shall be 2-inches long. Tag each wire in a Multi-Conductor cable in addition to the overall cable itself. Heat shrink all wire tags. Wiring must be tagged the same as the terminal block terminal designation. Wiring of each equipment (such as Pump No. 1, Pump No. 2, etc.) within the facility must be tagged different from any other equipment, and easy to identify even without schematic drawings at hand. Power, Control and Instrumentation wiring/cable tagging shall be per the requirements and methodology/scheme outlined in specifications Section 16200 "Wiring (600 volt and Below), ***"Wire Tagging Methodology".***

L. For proposed freestanding instrument control cabinets/panel, or where damaged in existing cabinet, install 1-1/2-inch high heavy duty fiberglass floor grading at the bottom of each section of the freestanding instrument control cabinets/panel. Each floor grading to be removable, however secure each to the bottom beams of the cabinet with stainless steel bolts/hardware. The fiberglass grading shall form a continuous floor allowing maintenance personnel to walk inside the cabinet/panel, from one section to another without exiting the cabinet/panel. The floor grading shall meet **OSHA** safety standards for personnel traffic. Field instrument /control/power/etc. wiring and cable entering/exiting the cabinets/panels shall be neatly laced/arranged beneath the fiberglass grading; i.e., the grading must be installed after start-up and testing is successfully completed.

M. For proposed cabinets, the interior of the cabinets shall be painted white.

N. Backpanels shall be painted white. Each section of the freestanding control cabinet/panel shall be furnished with a backpanel that shall extend the full height and width of the respective section.

2.02 MAIN INSTRUMENT AND CONTROL CABINETS

A. Modifications to existing freestanding Cabinets/Panels (Cabinet named on the PLANS as "RTU-24", "HSPS-MCP-001".).

1. Each piece of equipment shall have its individual control wiring terminal block/strip segregated and isolated from terminal block/strip of any other equipment. For example: Control wiring terminal block/strip for the Pump "HSPS-HSP-001" shall be physically isolated and mechanically separated from terminal block/strip utilized for control wiring of Pump "HSPS-HSP-002"; i.e. one long continuous terminal block/strip for both equipment and/or any other equipment <u>will not be accepted</u>. Additionally, signal wiring to **PLC** cabinet/racks shall be terminated to terminal blocks/strips segregated and isolated from terminal blocks/strips of any other equipment. This requirement also applies to discrete and analog signal wiring to multiple remote instrument and control panels/cabinets. When modifying existing cabinet/panel, remove any existing spare hardware (i.e. spare terminal blocks, din rail, control relay base hardware, etc.) to provide room for a terminal block/strip and hardware for each piece of equipment. Arrange terminal blocks/strip and hardware (i.e. isolators, relays, controllers, etc.) associated for a typical process equipment together on the backpanel of the existing control cabinet panel in the section as indicated on the PLANS. For example, for Surge Tank No. 1, provide additional din rail mounting if necessary, relocate existing terminal blocks to be used for terminating control logic wiring as denoted on PLANS, furnish and install terminal blocks as denoted on PLANS , and mount control relays, signal isolators, transmitter controller, and any other hardware associated with the equipment along the same din rail section. Separate discrete and analog terminal blocks along terminal block/strip associated for Surge Tank No. 1 as required. Provide a new nameplate identifying the terminal block/strip for Surge Tank No. 1 (i.e. TB-ST1). Perform the same modifications to the existing control cabinet/panel as provided in the aforementioned example for Surge Tank No. 1 for the other equipment installed in this project (i.e. Surge Tank No. 2, Surge Tank No.3, etc.). Also refer to section 2.06 F within this specification section for additional information regarding terminal blocks.

2. Label and provide nameplates for all relocated or installed terminal blocks or hardware within the existing control cabinet/panel. Provide labels as required per Subsections 2.06 F and 2.10 of this specification.

3. If any portion of the cabinet is damaged, then provide a replacement cabinet or replacement part as specified. Where new equipment is to be installed within the existing cabinet, please provide necessary accessories or hardware for mounting equipment as specified below.

4. The Instrument and control cabinets that are freestanding shall be comprised of the manufacturers MODULAR ENCLOSURES completely enclosed metal cubicles from formed structural members and furniture steel plate. The modular enclosures shall be joined together to form the overall freestanding cabinet (line-up). The cabinets shall comply with **NEMA-12** gasketed enclosure standards and be constructed of metal not less than **12 gauge** thickness. Provide lifting eyes for easy handling. Door shall be provided with neoprene door gaskets attached with oil-resistant adhesive and held in

place with steel retaining strips. Doors to have a continuous piano type hinge. Provide a 3-point latching mechanism, operated by an oil-tight key- locking handle on each door and on each set of overlapping doors. Provide rollers on the end of the door latch rods for easier door closing.

5. The manufacturers modular enclosure design shall also be of the type that is specifically manufactured to accept a wide variety of, USER SELECTABLE, manufacturer's **Internal *and* External Components** for configuring/arranging the freestanding cabinets as desired in order to achieve ease of maintenance for devices mounted within the cabinets, practical installation, space savings, aesthetics, etc. As minimum the following components must be available and be manufactured by the same manufacturer, and shall be utilized in the installation of each section of the MODULAR ENCLOSURES, unless otherwise noted:

   a. TOPS and BASES - External Components

      1) Tops shall be solid. Tops shall be furnished with removable lifting eyes. Bases shall be either solid or shall have adequate window openings for bottom conduit system entry. Refer to the PLANS. All bases shall be equipped with Stabilizers to provide extra stability for the enclosures. The exact dimensions of the window opening shall be determined based on the magnitude/spacing of the conduits entering the bottom of the cabinets.

      2) The height of the solid bases shall be a minimum of 5-inches and a maximum of 9-inches. The exact height shall be determined based on the volume of field interconnect cables/wiring. The cost of either arrangement shall be included in the BASE-BID. ***Please Note:*** All sections of the cabinet shall have the same height.

      3) Tops and bases shall be painted a different color from the enclosure body for architectural appearance. Additionally, the tops shall have a manufacturer's TRIM for architectural appearance.

      4) The tops shall be equipped with EXTRA SUPPORT BRACKETS to provide the extra support needed to accommodate the TOP ENTRY CONDUIT SYSTEM.

   b. SIDE and BACK COVERS - External Components

      1) Solid side cover shall be utilized for the end sections of the cabinet line-up. Each side cover shall be of one piece extending the full height and depth of the enclosure.

      2) Solid back cover shall be provided for each section of the cabinets. Each back cover shall be of one piece extending the full height and width of the enclosure.

   c. DOOR ASSEMBLIES - External Components

      1) Each section of the cabinets shall be furnished with a Full Height Solid Door. DOUBLE-BAY modules shall be equipped with two(2) overlapping doors.

      2) As indicated above, each door shall be equipped with a piano type hinge extending the full height of the enclosure.

3) As also indicated above, each door shall be equipped with 3-point latching mechanism and a key-lockable door handle. Door handles shall rotate clockwise or counterclockwise. Door handles shall be available in Medium Gray or Black colors for final selection by the OWNER.

4) Each door assembly shall be furnished with manufacturer's Door STOP Kit that will enable hold the door open in any position between 0-140 degrees.

5) Each door assembly shall be furnished with the manufacturer's Full-Door-Height **DOOR BARS** for the installation of inner device panels, rack-grid-system, etc. Each door MUST BE EQUIPPED WITH DOOR BARS EVEN WHEN DOOR MOUNTED DEVICES ARE NOT REQUIRED BY THE PLANS AND SPECIFICATIONS. If existing cabinet does not have DOOR BARS, contractor shall furnish and install for installation of proposed instrumentation.

6) The inside of each door shall be equipped with the manufacturer's DATA-POCKET for storing drawings and manuals. Double-Bay enclosures shall be furnished with one(1) data-pocket.

7) Doors that are scheduled to have a door mounted device/instrument shall also be equipped with manufacturer's GRID-STRAPS and FASTENER PACKAGE that shall be installed horizontally between DOOR BARS. If existing cabinet door does not have GRID STRAPS, contractor shall furnish and install for installation of proposed instrumentation.

8) Each door shall be furnished with the cabinet forced air ventilation assembly comprised of manufacturer's door mounted and thermostatically controlled EXHAUST FAN and associated LOUVER, and DOOR MOUNTED FRESH AIR INTAKE Louver, as also detailed on the PLANS. Each exhaust fan shall be of fractional horsepower with an operating voltage of 120 volts AC. Thermostats shall be mounted on the backpanel assembly of the cabinets. The thermostat shall be equipped with temperature gauge and temperature setting dial with setpoint indicating gauge. Thermostat shall be as manufactured by **Honeywell, Johnson Controls**, or approved equal. Fans shall be mounted on the inside of each door. Connect exhaust fans as shown on the PLANS. Provide an isolation DIN-RAIL mounted isolation circuit breaker for each exhaust fan. Size the circuit breaker per the National Electric Code (N.E.C.).

d. BACKPANELS (Subpanels) - Internal Components

1) Each section of the cabinet (modular-bay) shall be furnished with a full and solid backpanel (one piece full subpanel). Each backpanel shall extend the full height and width of the section.

2) Backpanels shall be used for mounting device terminals, relays, wireways, etc.

3) Each backpanel shall be mounted on the manufacturer's DIN Frame which shall be an inner frame around the full inner height and inner width of the section (BAY).

4) In addition to the backpanels, install a JOINING-BACKPANEL (joining subpanel) between every two(2) backpanels to provide a continuous backpanel (subpanel) surface between all the section.

5) All backpanels and joining backpanels shall be painted **WHITE**.

6) If the existing cabinets require additional space, contractor shall furnish and install additional side panels, backpanels, swing out panels of the same manufacturer as existing providing additional space for proposed equipment.

e. Accessories - Internal Components

The following represent only the bare -minimum accessories, other hardware type and component installation type accessories shall also be included and provided to accommodate for the neat, safe, aesthetically pleasing installation. Adherence to this requirement is necessary in order to accomplish a good craftsmanship-like system installation in an effort to and to the satisfaction of the OWNER and ENGINEER. The bare -minimum accessories required are:

1) Each door shall be electrically bonded to the frame of the associated enclosure with #8 AWG 600 volts insulated GREEN ground wire. Utilize manufacturer's grounding device assembly.

2) Install manufacturer's DRAW-OUT SHELVES for mounting equipment on a horizontal plane, where required on PLANS, to reduce from consumption of vertical space as well as providing a more convenient and easy access to the devices by maintenance personnel. The shelf assemblies shall be of the HEAVY-DUTY draw-out type with guide rails. As minimum Draw-out shelves shall be utilized for mounting the Ethernet switches and their associated power outlets and power adapters, and Instrument loops redundant DC power supply unit(s). Additionally, refer to the additional requirements of the PLANS. Draw-out shelves and associated assemblies shall be painted **WHITE**.

6. Freestanding Cabinets/Panels cabinets shall be as manufactured by "Hoffman" Model Proline Modular Industrial Enclosures complete with specified accessories, or approved equal.

2.03 WALL-MOUNTED LOCAL CONTROL PANEL

A. Typical for all wall mounted enclosures:

1. Enclosure shall be Type 316 Stainless Steel NEMA-4X corrosion resistant and completely enclosed. Enclosure door shall be gasketed and equipped with hinged doors complete with 1/4 (quarter) turn door latches. Enclosures shall have a smooth, non-brushed finish. Screw and clamp type door latches <u>are not acceptable</u>.

2. Enclosure door assembly shall be furnished with manufacturer's door stop kit that will hold the door open in any position between 0-130 degrees. Door shall be electrically bonded to the frame of the enclosure with #8 AWG 600 volts insulated green ground wire. Utilize manufacturer's grounding device assembly. The inside of door shall be equipped with the manufacturer's data-pocket for storing drawings and manuals.

3. Enclosure shall be furnished with a full and solid backpanel (one piece full subpanel). The backpanel shall extend the full height and width of the cabinet. Interior backpanel shall be painted white.

4. Cabinet/Panel shall be as manufactured by "HOFFMAN" Concept Wall-Mounted Series Industrial Enclosures complete with specified accessories, "RITTAL", or approved equal. Furnish enclosure complete with specified accessories.

2.04 INSTRUMENT AND CONTROL CABINET INTERIOR LIGHTING AND PROTECTIVE DEVICES

A. 120 Volts A.C. Overcurrent Protection:

1. Each cabinet uninterruptible power supply load distribution branch circuiting, lighting, convenience receptacle and 120 VAC/20A incoming main control/instrument power circuit shall be individually protected with thermal magnetic circuit breaker, as shown on the PLANS.

2. Each cabinet instrument and/or control device (controller, indicator, control device, power supply, **PLC** I/O, etc.), process signal instrument loop power supply, and individual 120VAC control logic branch circuiting shall be individually protected with a thermal magnetic circuit breaker, as shown on the PLANS.

3. Circuit breakers shall be U.L and CSA Listed, and shall be DIN-rail mounted, complete with visible trip indicator, as manufactured by **Allen-Bradley Series1492-SPM**. Size each circuit breaker to provide proper protection for instrument and/or control device served by the respective circuit breaker. Tag each circuit breaker similar to the terminal blocks, as defined under **Subsection 2.11** of this Section of the Specifications.

B. 24 Volts D.C. Overcurrent Protection:

1. Each cabinet instrument and/or control device (controller, indicator, control device, power supply, etc.), process signal instrument loop power supply, and 24VDC instrument loop shall be individually protected with a thermal magnetic circuit breaker, as shown on the PLANS.

2. Circuit breakers shall be U.L and CSA Listed, and shall be DIN-rail mounted, complete with visible trip indicator, as manufactured by **Allen-Bradley Series 1492-GH**. Size each circuit breaker to provide proper protection for instrument and/or control device served by the respective circuit breaker. Tag each circuit breaker similar to the terminal blocks, as defined under **Subsection 2.11** of this Section of the Specifications

C. Instrument Control Cabinet General Interior Lighting:

Furnish interior lighting fixture where shown on the PLANS. Each lighting fixture shall be fluorescent lighting fixture, suitable for 120 volts AC operation. Each fixture shall be 2-feet long utilizing two (2) 2-feet long rapid start and cool white fluorescent lamps. Each lighting fixture furnished shall also be furnished with an integral door activated switch wired to switch the light based upon the cabinet section door position.

D. Instrument Control Cabinet convenience receptacle:

Provide 120 VAC, 20A rated, specification grade grounded duplex receptacles. Refer to the PLANS for quantity required and additional requirements. Additional receptacle assembly features are as follows:

1. Specification grade
2. Duplex, 3-wire, polarized grounding type, rated 20 amp, 125 volt, 60 Hertz
3. Ivory Color
4. Manufacturer: Hubbell No. HBL5362I, Bryant**,** Pass and Seymour, or approved equal.
5. Coverplate: 304 brushed stainless steel, as manufactured by Hubbell, Killark, or approved equal.
6. Install in NEMA-1 enclosure inside of the control panel.

E. UPS Receptacle: Where shown on PLANS, Provide 120 VAC, 30A rated, specification grade grounded simplex twist-lock receptacle. Receptacle configuration shall be L5-30R, coordinate final configuration with the UPS requirements. Receptacle shall be Hubbell HBL2610 or approved equal. Refer to the PLANS for quantity required and additional requirements. Install receptacle inside control panel in NEMA-1 enclosure.

2.05 INSTRUMENT AND CONTROL CABINETS CONTROL DEVICES

A. Control Relays: Control relays shall be provided as required by the schematic diagrams. Refer to the PLANS. Mount control relays on the backpanels (device panels/subpanels) located inside the cabinets. Refer to the PLANS. All control relays shall be Type I relays unless specifically noted otherwise on the PLANS or as specified hereinafter. The minimum requirements for the different types of relays are as described below:

1. Type I Relays: Relays shall be 300 volts Heavy-Duty industrial type with 120V coils. Minimum contact rating shall be 10A, continuous, at 120 volts AC. One additional normally open (N.O.) and one additional normally closed (N.C.) contact, in addition to those shown on the schematic diagram, shall be provided for each relay. Wire the normally open and normally closed contacts to terminal blocks. Relays shall be furnished with visual mechanical latch-unlatch indicators. Additionally, coil of each relay shall be furnished with Relay Manufacturer's Transient Voltage Suppression Module. Relays shall be Allen Bradley Bulletin 700-P, or approved equal. <u>So called "International" and IEC rated relays will not be accepted.</u> All relays shall be standard NEMA size.
2. Type II Control Relays: <u>Relays shall be used only where specifically noted on the PLANS.</u> Relays shall be 300 volts "Ice-Cube" type with 24-volt DC (nominal voltage) coils. Minimum contact rating shall be 10A at 120 volts AC. Relays shall be configured with four (4) Form-C contacts (4PDT). Relay shall be equipped with LED indicator light and push-to-test button. Furnish relay complete with socket and retaining clip. Relay socket shall be din rail mountable. Relays shall be "Allen-Bradley", catalog number 700-HF34Z24-3-4 complete with relay socket base catalog number 700-HN139 and relay retaining clip catalog number 700-HN140, or approved equal.

B. **Timing Relays**: Solid state, multi-time, and multi-function type relay. Both timing ranges and timing modes shall be field selectable. Each relay shall be capable of the following timing modes: On Delay, Off Delay, One Shot, Repeat Cycle, and Interval. Minimum relay contact rating shall be 10 amps, continuous, at 120 VAC. Coils shall be 120 VAC. Timing relays shall be

Square D Class 9050 model No. JCK70 complete with Type NR61 Socket, or approved equal. One additional normally open spare contact and one additional normally closed spare contact shall be provided for each relay, in addition to those contacts shown on the schematic diagrams. Wire the additional spare contacts to terminal blocks for future use. Mount control relays on the backpanels (device panels/subpanels) located inside the cabinets.

C. **Elapsed Time Meters**: Non-Resettable type, cyclometric types reading at least to 99999.9 hours (HR.) and at least to nearest one-tenth of an hour. **Eagle Signal/Danaher Controls series HK410**.

D. Pushbuttons, Selector Switches and Pilot Lights:

1. For installation on Nema 12 enclosures and enclosures located in environmentally and climate controlled areas:

   a. Indicating lights shall be NEMA Style, full size 30-millimeter (30mm), Transformer Type Light Emitted Diode (LED), NEMA 4/13 oil tight and watertight, full size, push to test type, rated at 120VAC, with legend plate marked as shown on the PLANS. Lens color shall be as shown on the PLANS. Refer to PLANS control schematics and details for the exact color requirements. Pilot lights shall be as manufactured by Allen-Bradley Bulletin 800T NEMA Type 4/13, oil tight and water tight. Miniature size pilot lights will not be accepted.

   b. Pushbuttons and Selector Switches shall be Heavy duty NEMA 4/13, oil tight/ water tight, NEMA Style full size 30-millimeter (30mm), pushbuttons and selector switches as required by the PLANS. The number of contact blocks shall be as required by the PLANS. The selector switches and pushbutton contacts shall be rated 10-amperes minimum at 120 volts AC. The selector switches shall be furnished with Black Knob Lever Operators. The color of the pushbutton operator shall be as shown on the PLANS, Black otherwise. Selector switches and pushbutton operators and contact blocks shall be Allen Bradley Bulletin 800T. Miniature size stations will not be accepted.

   c. Mushroom Head Push Buttons: NEMA style, heavy duty, NEMA 4/13 watertight/oiltight mushroom head pushbutton with the number of contact blocks required by the schematic diagrams. Mushroom head pushbutton contacts shall be rated 10 amps at 120VAC. The contact blocks shall be provided with fingersafe guards (guards on contacts). The mushroom head pushbuttons shall be the two-position "Push-Pull" type with RED mushroom head button. The mushroom head pushbuttons shall be as manufactured by Allen-Bradley Bulletin 800T. Miniature size stations will not be accepted. Each button shall be provided with a hinged polycarbonate corrosion resistant locking cover. Cover shall be capable of closing without actuating the push button. Cover shall be C3 Controls Model LOAFC, or approved equal.

2. For installation on Nema 4X enclosures and enclosures located in areas that are not environmentally and climate controlled:

   a. Indicating lights shall be Heavy duty NEMA 4X/13, oil tight/corrosion resistant, and rated for use in wet locations, NEMA Style full size 30-millimeter (30mm), Transformer Type Light Emitted Diode (LED), push-to-test type, rated at 120VAC, with legend plate marked as shown on the PLANS. The push-to-test

Indicating lights shall be furnished with stackable sealed contact blocks. Lens color shall be as shown on the PLANS. Indicating lights shall be as manufactured by Allen Bradley Bulletin 800H, or approved equal. Miniature size pilot lights will not be accepted.

b. Pushbuttons and Selector Switches shall be heavy duty NEMA 4X/13, oil tight/corrosion resistant, and rated for use in wet locations, NEMA Style full size 30-millimeter (30mm), pushbuttons and selector switches as required by the PLANS. Selector switches and pushbutton shall be furnished with stackable sealed contact blocks. The number of contact blocks shall be as required by the PLANS. The selector switches and pushbutton contacts shall be rated 10-amperes minimum at 120 volts AC. The selector switches shall be furnished with Black Knob Lever Operators. The color of the pushbutton operator shall be as shown on the PLANS, Black otherwise. Selector switches and pushbutton operators and contact blocks shall be Allen Bradley Bulletin 800H. Miniature size stations will not be accepted.

c. Indicating lights shall be NEMA Style, full size 30-millimeter (30mm), Transformer Type Light Emitted Diode (LED), NEMA 4X /13 oil tight and watertight, full size, push to test type, rated at 120VAC, with legend plate marked as shown on the PLANS. Lens color shall be as shown on the PLANS. Refer to PLANS control schematics and details for the exact color requirements. Pilot lights shall be as manufactured by Allen-Bradley Bulletin 800H NEMA Type 4X/13, oil tight and water tight. Miniature size pilot lights will not be accepted.

d. Mushroom Head Push Buttons: PUSH-PULL maintained pushbuttons, heavy duty NEMA 4X/13, oil tight/corrosion resistant, rated for use in wet locations, NEMA Style full size 30-millimeter (30mm), pushbuttons and selector switches as required by the PLANS. Push-Button Station shall be furnished with stackable sealed contact blocks. The number of contact blocks shall be as required by the PLANS. Push-Button Station contacts shall be rated 10-amperes minimum at 120 volts AC. The Push-Button Stations shall be furnished with mushroom-head operators with the lettering engraved on the operators as shown on the PLANS. The color of the Push-Button Station Operators shall be RED and as shown on the PLANS. The control stations shall be as manufactured by Allen-Bradley Bulletin 800H. Each button shall be provided with a hinged polycarbonate corrosion resistant locking cover. Cover shall be capable of closing without actuating the push button. Cover shall be C3 Controls Model LOAFC, or approved equal. Miniature size Push-Button Stations will not be accepted.

3. Legend Plates: Provide legend plates for each control panel, pilot device, pushbutton, and selector switch installed on the control panel per details shown on the PLANS. Additionally, the legend plates shall be the Manufacturer's standard with lettering and lettering height as indicated on the PLANS. Legend plates shall be of the same manufacturer as the respective pushbuttons, selector switches and pilot lights.

2.06 INSTRUMENT AND CONTROL WIRING

A. **General Wiring**: All control wiring shall be extra flexible 41-strand**, #14 AWG**, copper conductor, 600v insulation, **SIS wire** manufactured by **General Cable Company, The Okonite Company,** or equal. Color coding shall be as follows:

FUNCTION	COLOR CODE
120Vac control/status/alarm signal wiring. This does not apply to control/status signal wiring that are scheduled for interface with Programmable Logic Controller **(PLC)** and DC Alarm wiring	**Red**
120Vac control wiring to relay coils (L1 & L2 terminals or H&N terminals) that are not generated from a **PLC** Discrete Output point (**DO)**	**Gray**
120Vac power supply wiring to instrumentation and control devices that are not generated from a **PLC** Discrete Output point (**DO)**	**Gray**
24 VDC power supply wiring	**Blue**
Alarm wiring for 125 volt D.C. circuits only	**Yellow**
Wiring to instrument control cabinet interior lights/receptacle/exhaust-fans	**Red = Hot (phase-A)** **Black = Hot (phase-B)** **Blue = Hot (phase-C)** **White = Neutral**
Control/status signal wiring to Programmable Logi Controller **(PLC) -**Discrete Input Modules (as shown on the PLANS)	**Violet**
Control/status signal wiring **from** Programmable Logic Controllers **(PLC's)** –Discrete Output Modules (**DO**'s as shown on the PLANS)	**Pink**
Ground Wires	**Green**
24VDC instrument loop power wiring	**Blue = Positive (+)** **Brown = Negative (-)**

B. 4-20 Milliamp Signal wiring: Twisted pair, #16 AWG stranded copper conductors with PVC insulation over each conductor, a tinned copper drain wire, an overall aluminum-mylar shield and an outer PVC jacket. **Samuel Moore and Company, Dekoron Division, Cat. No. 1852** or equal. ***Color*** of the twisted pair shielded cable jacket shall be **BLACK**. The ***color*** of the positive (+) and negative (-) conductors within the each cable shall be **BLACK** and **WHITE** respectively.

C. Resistance Temperature Detector "RTD" Signal Wiring: Twisted triad, #16 AWG stranded copper conductors with PVC insulation over each conductor, a tinned copper drain wire, an overall aluminum-mylar shield and an outer PVC jacket. **Samuel Moore and Company, Dekoron Division, Cat. No. 1862** or equal. ***Color*** of the twisted pair shielded cable jacket shall

be **BLACK**. The ***color*** of the sense (+), negative (-), and common (-) conductors within the each cable shall be **BLACK**, **WHITE,** and **RED** respectively

D. Ethernet Data Communication Cable, Connectors, and Hardware:

1. Provide and install copper cables, connectors, and patch cords for the Distributed Control System DCS where shown on the PLANS. Replace/repair existing copper cables, connectors, and patch cords should the existing be damaged during renovation of existing Instrument and Control cabinets/panels. The ICS shall schematically design the routing and specify component make and model. The components herein shall be provided as minimum for bidding purposes.

2. Ethernet Copper Connectors: All copper Ethernet cables shall have a Category 6A boot type RJ-45 connector.

3. The installed Ethernet copper media system (including cable, data outlets, connectors, patch cords, patch panels, etc.) shall at minimum meet the TIA/EIA-568-C.2-10 Category 6A standards.

4. Ethernet Copper Patch Cords:

   a. The Ethernet Copper Patch Cord shall be used to connect a communication device with a patch panel or Ethernet Copper Data Outlet. The Ethernet Copper Patch Cord shall also be used to connect devices directly to one another. At minimum, furnish and install copper patch cords for all Ethernet cabling between devices or between device and patch panel within the same cabinet. Refer to PLANS for required interconnections.

   b. Each patch cord connector end shall be RJ-45 and shall be the Boot type connector. The connectors at each end shall be preinstalled by the Ethernet patch cord manufacturer.

   c. The Patch Cord shall be unshielded twisted pair and shall be rated Category 6A.

   d. The Ethernet copper cable outer jacket shall be Blue.

5. Copper Ethernet Data Communication Cabling:

   a. Copper Ethernet Communication Cabling shall be used to interconnect copper patch panels with each other, or to interconnect Ethernet data outlets to copper patch panels.

   b. The copper Ethernet cabling shall be unshielded, twisted pair, rated Category 6A cabling.

   c. Agency Compliance: TIA/EIA-568-C.2, TIA/EIA-568-C.2-10 Category 6A, IEEE 802.3an 10GBASE-T Ethernet, UL Listed

   d. Number of Pairs: Four

   e. Wire: #23 AWG Bare Copper

   f. Type of Conductors: solid copper conductors, twisted

   g. Individual Conductor Insulation: minimum 300 volt polyolefin

   h. Individual Conductor Insulation Color: White/Blue Stripe, Blue, White/Orange Stripe, Orange, White/Green Stripe, Green, White/Brown Stripe, Brown

i. Overall Jacket: PVC, include ripcord

j. Overall Jacket Color: Blue

k. Manufacturer: Belden 10GX32, or approved equal

6. Cabinet Door Mount Data Jack

a. An RJ-45 data jack shall be mounted on the control cabinet door, as indicated on drawings, for owner access to communication network.

b. The cabinet door mount data jack shall be waterproof CAT6 RJ45 Panel Mount Jack, with cover, model RJ45-6WTP-CS-JCK, as manufactured by NTI.

E. Terminal Blocks and Routing/Termination of Wiring:

a. Type I Terminal Blocks: Type I terminal blocks shall be used in all proposed control panels/cabinets specified herein. Terminal blocks shall be single layer, NEMA rated Terminal Blocks, made of nylon or polypropylene, rated for 600 volts with a continuous current rating of 55-amperes. Terminal block color shall be as specified hereinafter. Terminal blocks shall be manufactured by **Allen-Bradley catalog No. 1492-HM3** (37 terminals per foot), Phoenix Contact, or approved equal.

b. Provide manufacturer's standard insulating jumpers, DIN rail, barriers, end anchors, etc. and all related mounting hardware as required for a complete and functional installation. All additional hardware and accessories shall be of the same manufacturer as the provided terminal blocks.

c. If providing proposed terminal blocks in the existing control cabinet/panel, the proposed terminal blocks shall match the existing terminal blocks (i.e. manufacturer and model no.) provided in the existing control cabinet/panel.

2. The ***color*** of **each** Terminal Blocks shall be based on function and type of the wiring terminated to the block. The color coding of the terminal blocks shall be as follows:

FUNCTION	COLOR CODE
TERMINAL BLOCKS for 120Vac control/status/alarm signal wiring. This APPLIES TO ALL control/status signal wiring and including 120Vac control/status signal interface wiring with Programmable Logic Controller **(PLC)** and Alarm wiring	**RED**
TERMINAL BLOCKS for 120Vac control wiring to relay coils (L1 & L2 terminals or H&N terminals) INCLUDING THOSE that are generated from a **PLC** Discrete Output point (**DO)**	**RED**
TERMINAL BLOCKS for 120Vac power supply wiring to instrumentation and control devices and communication instruments	**BLACK**
Wiring to instrument control cabinet interior lights/receptacle/exhaust-fans	**BLACK**

FUNCTION	COLOR CODE
Ground Wiring terminal blocks, including shield wiring terminal blocks within the 4-20mAdc signal wiring terminal strip	**GREEN**
Terminal Blocks for 4-20mAdc process signal wiring POSITIVE (+) and NEGATIVE (-) terminals	**WHITE**
Terminal Blocks for 24volts DC power wiring	**WHITE**

3. Terminate all incoming wiring and inter-cabinet wiring to terminal blocks. Terminal blocks shall be mounted on a Heavy Duty DIN Rail. Each terminal block shall be furnished with Allen-Bradley Bulletin **1492-SMN81 Marking System**, or approved equal, for multi-character marking surface, complete with detachable multi-character marking surface (holder) extending the full width of the terminal block.

4. Tag each terminal block. All tags must be typed and neatly attached to the marking surface (utilize adhesive tags).

5. Tag/Identify each terminal strip/string of terminal blocks with identification nameplate constructed of **3-ply "Black-White-Black"** laminated phenolic material having engraved letters approximately 1/4 inch high minimum (and/or of size shown on the PLANS) extending through the black face into the white layer. Nameplates located on the panel/cabinet backpanel shall be secured with two (2) stainless steel screws..

6. Utilize manufacturer's standard plated insulated copper terminal-to-terminal insulated side jumpers for making connections between adjacent terminal blocks and/or between terminal blocks located on the same terminal strip. Use of wire as jumper between terminal blocks will not be accepted.

7. Each process equipment shall have its individual control wiring terminal block/strip segregated and isolated from terminal block/strip of any other process equipment.

8. Terminal blocks/terminal strips for different wiring systems such as power wiring, control/discrete signal wiring, and analog/instrument wiring shall be segregated from each other. Also refer to the PLANS.

9. Wire entering the cabinets/panels shall enter through the floor, the side, and/or the top of the cabinets via conduits fitted with bushings or hubs.

10. Route all wiring from an instrument through the terminal block to the other instrument rather than directly from one instrument to the other. This also applies to wiring between pushbutton selector switches, relays, relay contacts, and pilot lights. Also, refer to the PLANS.

11. Route power supply wiring or wiring common to more than one device or instrument individually from the terminal strips to each device. Do not loop wiring between devices.

12. Group all wiring where possible and neatly lace with waxed twine or wrap with a clear polyethylene flexible spiral wrapping by **Electrovert Spiraband** or approved equal. Wiring routed against back panel of the control panel may be installed in plastic wireways by **Panduit** or approved equal. However, where wiring is routed on inside face of control panel access door and where not possible to route in plastic wireway installed on the back panel, waxed twin or spiral wrapping must be used.

13. Route wiring to equipment on doors (if applicable) so that the doors can be opened to the fullest extent of travel without stressing the wiring.

14. Terminate shield wire of each shielded cable to a terminal point (block) on the terminal strip (i.e., treat as current carrying conductor). Do not terminate more than one shield wire to a single terminal block (point). i.e., each twisted pair shielded cable should have three termination points independent/isolated from termination points of neighboring cables. Extend #14 AWG insulated green ground wire from each shielded cable shield termination terminal point to the isolated main ground bar of the cabinet (shield/drain wire ground).

15. Terminal point on a device, relay, instrument, etc. will not be considered the same as terminal located on a terminal block. Terminal blocks, terminal symbols, etc. shown on the drawings are in reference to terminal blocks, terminals, etc. independent of any terminal strip and/or termination point furnished with/on the device, relay, instrument, etc. by the device, relay, instrument, etc. manufacturer.

16. Spare contacts of each device (i.e. control relays, timing relays, selector switches, etc.) shall be wired (in same fashion) to terminal blocks (although they shall serve as spare points). Wiring and termination points of spare points of all equipment must be treated the same as any other active point and must follow the same format described under wiring/terminal block tagging scheme/strategy/method.

17. Wiring and termination points of spare points (spare wires, if any) shall be tagged, terminated to terminal blocks/strips (i.e., not left coiled inside the Cabinet) and shall be treated the same as any other active point and must follow the same format described under wiring/terminal block tagging scheme/ strategy/method. The spare terminal blocks/strip shall be identified as ***future use - spare terminal block strip.***

2.07 INSTRUMENT AND CONTROL CABINETS INSTRUMENTATION EQUIPMENT

A. Indicating Transmitter Limit Alarm Controller:

1. Furnish programmable Current Limit Alarm Controller where shown on the PLANS.

2. The Limit Alarm Controller shall be designed for one 4-20mA Current input, one 4-20 mA isolated output signal and four single-pole/double-throw output relays.

3. The Limit Alarm Controller shall be capable of accepting 24VDC supply or 120VAC supply. Refer to the PLANS.

4. The Limit Alarm Controller current accuracy shall be +/- 0.03% of output span. The controller shall be equipped with RFI/EMI protection such that less than +/- 0.5 % of span error is incurred.

5. The Limit Alarm Controllers shall be provided with a 2x4 character backlit LCD alphanumeric display. Setpoint configuration shall be programmed utilizing a front panel keypad.

6. The Limit Alarm Controller shall be supplied with a 4-20mA isolated analog output (AO) signal option.

7. The Limit Alarm Controllers shall be of the high-density type with DIN-style housing. The Limit Alarm Controllers shall be mounted on a rail (DIN-rail mounting) in the control panel where shown on the PLANS. Each Limit Alarm Controllers shall be tagged by loop number and loop process identification, as also shown on the PLANS.

8. The Limit Alarm Controllers shall be as manufactured by MOORE Industries Model SPA2, with universal or approved equal.

B. Single Input, Single Output Instrument Loop Current Isolators (I/I Converters):

1. Furnish single input, single output instrument loop isolators (I/I Converters) where shown on the PLANS.

2. The loop current isolators shall be designed for one 4-20mA input and one 4-20 mA isolated output signal and equipped with a built-in load trimmer.

3. The loop isolator shall be capable of driving a 4-20mA signal into a maximum load of 1000 Ohms on the output channel.

4. The loop current isolator shall be capable of accepting 24VDC supply or 120VAC supply. Power the loop current isolator from an external 24VDC power supply as shown on the PLANS.

5. The output loop current accuracy shall be +/- 0.1% of full span. The loop isolator shall be equipped with RFI/EMI protection such that less than +/- 0.1 % of span error is incurred when tested against a reference signal of 30 volts per meter over the frequency range of 20 to 1000 MHz, inclusive.

6. Each loop isolator shall be equipped with the field selectable transmitter excitation option which allows the isolator to supply 24VDC power to a 2-wire instrument connected to the isolator input. For those instruments which do not source DC power to the isolator input loop, wire the isolator so that it supplies 24VDC power to the input loop. For those instruments which source DC power to the isolator input loop, wire the isolator so that it does not supply DC power to the input loop.

7. The loop isolator shall be of the high-density type with corrosion resistant metal housing. The isolators shall be mounted on a rail (DIN-rail mounting) in the control panel where shown on the PLANS. Each loop isolator shall be tagged by loop number and loop process identification, as also shown on the PLANS.

8. The loop current isolators shall be as manufactured by MOORE Industries Model ECT-DIN, 4-wire with TX and RF options, or approved equal.

C. Single Input, Dual Output Instrument Loop Current Isolators (I/I Converters)

1. Furnish single input, dual output instrument loop isolators (I/I Converters) where shown on the PLANS.

2. The loop current isolators shall be designed for one 4-20mA input and two 4-20 mA isolated output signal and equipped with built-in load trimmers.

3. The loop isolator shall be capable of driving a 4-20mA signal into a maximum load of 1000 Ohms on each output channel.

4. The loop current isolator shall be capable of accepting 24VDC supply or 120VAC supply. Power the loop current isolator from an external 24VDC power supply as shown on the PLANS.

5. The output loop current accuracy shall be +/- 0.1% of full span. The loop isolator shall be equipped with RFI/EMI protection such that less than +/- 0.1 % of span error is incurred when tested against a reference signal of 30 volts per meter over the frequency range of 20 to 1000 MHz, inclusive.

6. Each loop isolator shall be equipped with the field selectable transmitter excitation option which allows the isolator to supply 24VDC power to a 2-wire instrument connected to the isolator input. For those instruments which do not source DC power to the isolator input loop, wire the isolator so that it supplies 24VDC power to the input loop. For those instruments which source DC power to the isolator input loop, wire the isolator so that it does not supply DC power to the input loop.

7. The loop isolator shall be of the high-density type with corrosion resistant metal housing. The isolators shall be mounted on a rail (DIN-rail mounting) in the control panel where shown on the PLANS. Each loop isolator shall be tagged by loop number and loop process identification, as also shown on the PLANS.

8. The loop current isolators shall be as manufactured by MOORE Industries Model ECT-DIN, 4-wire with TX and RF options, or approved equal.

2.08 24 VDC INSTRUMENT LOOP POWER SUPPLIES

A. Provide power supplies installed and wired as shown on the PLANS in accordance with the following specifications.

B. Instrument Control Panels/Cabinets Dual Input Single Output 24 VDC Power Supplies:

Provide dual input single output 24 VDC Power Supplies were required by the PLANS. 24 VDC Dual Input Single Output 24 VDC Power Supplies shall be provided as dual Redundant primary-backup (secondary) arrangement 24 VDC switching type power supplies connected in parallel via current steering diodes with automatic switchover from the primary to the backup (secondary) power supply unit. The secondary power supply shall recover 24 VDC power to the system immediately and shall sound and alarm when a switchover has taken place (i.e., when the primary power supply unit has failed). The alarm contacts shall be rated 5-amps at 120 volts AC. Connect the alarm contacts to the Discrete Input Point on the Programmable Logic Controller (**PLC**) inside the Main Control Panel (MCP) as also shown on the PLANS. These power supplies shall operate from 120 VAC input power and shall provide direct current output current of 15 amperes (each unit) at 24 VDC at 40 degrees C, and shall be adjustable from 24 to 28 VDC by screw driver operated adjustment. Input power regulation shall be 0.2% from 105 to 130 VAC. Output load regulation shall be 0.2% maximum from zero to full load. Ripple shall not exceed 0.5% at full load. The power supplies shall have integral output current limiting and over-voltage protection. The power supplies shall have fully enclosing cases. The power supply shall be manufactured by **Acopian (Redundant Power Supply Unit)**, or approved equal.

Each power supply unit's draw-out assembly shall be furnished by the Power Supply Manufacturer. Additionally, each power supply unit shall be furnished with the following additional features by the Manufacturer of the Power Supply.

1. Draw-out handles mounted on the face of the power supply unit.
2. Voltage level analog indicator, one per source (primary and redundant).
3. Current level analog indicator, one per source (primary and redundant).

C. Instrument Control Panels/Cabinets Single Input Single Output 24VDC Instrument Loop Power Supply:

1. Provide single input single output linear regulated 24 VDC Power Supplies were required by the PLANS. These power supplies shall operate from 120 VAC input power and shall provide direct current output current of 1 amperes at 24 VDC at 40 degrees C, and shall be adjustable from 23 to 25 VDC by screw driver operated adjustment. Input power regulation shall be 0.05%. Output load regulation shall be 0.1% maximum from zero to full load. Ripple shall not exceed 1 milliVolt RMS at full load maximum. The power supplies shall have integral over-voltage protection. The power supplies shall have fully enclosing ventilated cases. The power supply shall be plug-in type, suitable for use with Octal socket. Provide octal mounting socket with each power supply. The power supply shall be manufactured by Acopian "Plug-In Single Output Linear Regulated" Model V24J100 complete with socket SL608, or approved equal.

2.09 INSTRUMENT CONTROL PANELS/CABINETS UPS:

A. Where required by the PLANS, furnish and install the quantity of Uninterruptible Power Supply (UPS) units <u>in each</u> of the instrument/control/communication cabinets as shown on the PLANS Each UPS shall be as follows:

1. The UPS shall have the apparent power rating as shown on the PLANS at minimum.
2. Each UPS shall operate from 120 VAC input power and shall provide 120 VAC output power. The UPS shall have a capacity to deliver the continuous full load AC output current shown on the PLANS at 120 VAC for fifteen (15) consecutive minutes at minimum, after the input power is removed. The output wave-form shall be 60Hz sinusoidal with 5% maximum harmonic distortion. The UPS shall be filtered with 0.3% IEEE surge let-through and zero clamping response time, complying with UL 1449 requirements. The output shall have over-current protection with latched shutdown.
3. The UPS shall consist of a field configurable bypass mode for automatic or manual bypass to the AC input source
4. The UPS shall consist of automatic self test, executed on start up and at regular intervals (minimum of once per 14 days), and fault detection LED annunciating self test failure. Upon inverter module failure, the UPS shall automatically direct connect the connected load to the input power source and bypass the inverter module.
5. The UPS shall consist of automatic voltage regulation to maintain its sine wave output in accordance to these specifications. The settings for the UPS AC input source voltage high and low values to initiate transfer to battery power shall be field adjustable.

6. The UPS shall have the following front panel indications (LED type) and alphanumeric display:

   a. UPS On Status

   b. Fault

   c. On Battery

   d. Bypass

   e. Battery Replacement Needed

7. The UPS shall have the following audible alarms:

   a. UPS failure

   b. Battery failure

   c. Power loss to the UPS

8. The UPS shall have the following front panel mounted push buttons:

   a. Energizing UPS

   b. De-energizing UPS

   c. Manual UPS Self test initiation

9. The batteries shall be maintenance-free, fumeless, sealed, leak proof batteries that are accessible for replacement by the OWNER. The batteries shall be rated for use in Computer Rooms (by NFPA and all other Safety Codes). Batteries shall have maximum of five (5) hours to charge to 95 percent capacity. Provide battery extension cabinet where required to obtain a minimum duration runtime of fifteen (15) minutes for the connected load in the event of a power loss and where shown on the PLANS.

10. The UPS shall be provided with a manufacturer's standard external maintenance bypass switch. The external maintenance bypass switch shall be sized such to carry the full load current of the UPS inclusive of inrush current, at minimum. Also refer to the requirements shown on the PLANS. The maintenance bypass switch shall be installed in such a manner that the selector switch is accessible from the front of the control cabinet. Provide any additional accessories necessary to facilitate the installation of the maintenance bypass switch.

11. The UPS and the battery backup units shall be installed in a NEMA-12 enclosures

12. The UPS shall be able to operate from 0 to 40 degrees C.

13. Accessories:

    a. The UPS shall consist of a relay I/O module which provides 24VDC, 1A rated relay output contacts. At minimum, the card shall consist of a dry contact indicating UPS fault, and a dry contact indicating requirement for Battery Replacement. Wire the UPS fault alarm, the battery replacement alarm, and the UPS in bypass status in series to a 24VDC rated Type II control relay as specified in section 17200. An alarm contact from the 24VDC UPS fail relay shall be wired as a discrete input into the programmable logic controller to indicate a UPS common trouble/fail alarm. Also refer to PLANS for wiring to the UPS relay I/O module.

b. The UPS shall be provided with all necessary interconnecting cables, connectors, Windows compatible configuration software (if necessary), for a complete and functional installation.

c. Provide all 19 inch rack mounting brackets, miscellanous mounting hardware to facilitate the mounting shown on the PLANS. Provide for the mounting configuration as shown on the PLANS. Mount UPS within the control cabinet, without obstructing access to components within cabinet. Install UPS in accordance to manufacturers requirements and recommendations, including proper UPS power termination, ventilation, and cooling.

14. The UPS shall have a two (2) year manufacturer's warranty at minimum

15. 15. The UPS shall be as manufactured by Eaton Model 9PX Series UPS with external maintenance bypass switch Eaton HotSwap MBP Model EHBPL****R-PDU1U (where **** is based on UPS rating shown on the PLANS), and Relay Interface Card Eaton Model No. Relay-MS , or approved equal.

2.10 INSTRUMENT AND CONTROL DEVICES IDENTIFICATION

A. All devices on the face, on the back, and inside the instrument control cabinets/panels shall be permanently identified. The device designations shall agree with those shown on the PLANS and per the equipment tagging requirements of Austin Water Utility. Each device shall be provided with permanent type identifying nameplate. Nameplates, unless otherwise specified, shall be constructed of **3-ply "Black-White-Black"** laminated phenolic material having engraved letters approximately 1/4 inch high minimum (and/or of size shown on the PLANS) extending through the black face into the white layer. Nameplates located on the panels/cabinets face shall be secured with two Stainless Steel screws.

B. For devices mounted on the face of the instrument control cabinets/panels doors, install identification nameplate on the back side of the doors in addition to the nameplates installed on the front face of the instrument control cabinets/panels. Nameplates installed on the back side of the doors shall be per the requirements of paragraph-A (above) of this subsection.

C. All field mounted control and instrument devices shall permanently identified. The device designations shall agree with those shown on the PLANS and per the equipment tagging requirements of Austin Water Utility. Each device shall be provided with permanent type identifying nameplate. Nameplates, unless otherwise specified, shall be shaped as a circle and shall be constructed of **3-ply "Black-White-Black"** laminated phenolic material having engraved letters approximately 1/4 inch high extending through the black face into the white layer. Securely hang nameplates from each instrument/control device by a flexible stainless steel snap-on type hanger/key-chain cord (neatly drill a hole through the top of the identification nameplate for this purpose).

PART 3 - EXECUTION

3.01 SHIPMENT AND STORAGE

A. Cabinets shall be prepared for shipment in weatherproof and crush-proof containers.

B. Handling of cabinets shall be accomplished with extreme care, especially after removal from shipping containers.

C. Storage: *Refer to Specification Section 17100*.

3.02 INSTALLATION

A. Cabinets shall be installed in the locations shown on the PLANS.

B. All wiring shall be connected as shown on PLANS and all systems shall be thoroughly checked out.

C. Install all equipment in accordance with the PLANS and instructions furnished by the manufacturer.

D. Inspect each new instrument, control component, etc., before installation. Replace deficient items.

E. Tag all power, Instrumentation and Controls, and all other types of auxiliary electrical wiring and cables at both ends in Instrument and Control Panels. Use Flame-Retardant, Heavy-Duty Industrial Grade and Heat Shrinkable type wire tags approved for this use and as manufactured by Raychem type Heavy-Duty Industrial Grade ShrinkMark Heat-Shrinkable Marking Sleeves. All wire tags shall be YELLOW in color (except the color used for branch-circuit lighting and convenience receptacle circuits shall be WHITE). HEAT SHRINK ALL WIRE TAGS. All wire tags must be typed with an indelible marking process. Utilize Raychem Portable-Marking-System complete with wire tag cartridges. Character size shall be minimum of 1/8" in height. Handwritten tags WILL NOT BE ACCEPTED. Tag wiring and cables per Section 16200 of the Specifications, "Wiring (600 volt and below)", subsection 3.03 "Wire Tagging Methodology" and per the Austin Water Utility cable and wire tagging standards. Tag each wire in a Multi-Conductor cable in addition to the overall cable itself. To represent all of the text to be shown, multiple wire tags may be needed at each end of the wire. Provide additional tags as necessary at no additional cost to the Owner.

3.03 INSTALLATION REPORT

A. After installation, the manufacturer's representatives shall inspect the installation and prepare a report or reports to include the following:

1. A list of all deficiencies found.
2. Recommend corrective action for all facilities.
3. Certification that the item or system is properly installed, except as noted.

3.04 FIELD CALIBRATION AND TESTING

A. Calibrate instruments and prepare calibration reports. All calibration shall be performed by factory-trained technical personnel. Calibration shall be witnessed by Owner's Personnel and Engineer.

B. The complete system shall be tested by experienced factory-trained technical personnel. All system tests shall be witnessed by Owner's Personnel and Engineer.

C. Perform the following tests using simulated inputs:

1. Check the overall system and each subsystem to see that they function as specified based on simulated inputs at each sensor and at each set of field contacts monitored. This check to include the testing of all automatic functions, sounding of alarms, shutdowns, etc.

2. Check the overall accuracy of each new and modified instrument loop to ensure that it is within acceptable tolerance.

D. If defects are found under simulated conditions, make corrections and retest.

E. After start-up, test the complete system under actual conditions to determine that all specified functions can be performed.

F. After completion of testing, submit a System Test Report. This report to include:

1. Certification that the system is operating correctly and within tolerances.

2. Listing of calculated tolerances for each new and modified instrument loop.

3.05 ON-SITE OPERATIONS AND MAINTENANCE TRAINING

A. Start-up Training: Provide required instruction to the Owner's personnel during start-up period.

B. Special Training School: Provide services of a factory-trained instructor or instructors for a period of not less than one (1) working day for the purpose of instructing the Owner's personnel in the correct operating and maintenance procedures for all the instrument and hard-wired control system components and the entire Instrumentation and Control System, and Communications System including the various instrument and control system cabinets/panels installed in this project. This is in addition to the training requirements defined in *Section 17100 of the Contract Specifications*. The date of this school shall be scheduled with the Owner, but will be after the entire instrument and control systems is in operation. Also, refer to the additional training requirements defined in *Section 17100 of the Contract Specifications*.

3.06 MEASUREMENT AND PAYMENT

A. No separate measurement or payment for work performed under this Section. Include cost of same in Contract price bid for work of which this is a component part.

END OF SECTION

SECTION 17600

DISTRIBUTED CONTROL SYSTEM

PART 1 - GENERAL

1.01 SCOPE OF WORK

A. Furnish all labor, materials, equipment, and incidentals required, and shall install complete, ready for operation, and test the distributed control system, hereinafter termed the System as shown on the PLANS and as specified.

B. The ICS shall provide equipment, materials, software, calibrations, and services that are required to successfully interface and interconnect the System and associated equipment that are specified or designated in drawings or provisions of these specifications for the purpose of providing a fully integrated and functional control system as specified.

C. The ICS shall furnish and install cabling and cable accessories, including tools necessary for connecting the System and peripherals, PLCs, data highway, and input/output devices.

D. The ICS shall furnish startup assistance, training, and system check-out services.

1.02 DISTRIBUTED CONTROL SYSTEM DESCRIPTION

A. General: the Distributed Control System (DCS) as shown on the PLANS and specified herein, consists of Programmable Logic Controllers Subsystem (PLCs), existing Personal Computers/Workstations "PC", and Communication System, Application and System Software, and PLC networking/data communications over a Fast Ethernet, and Gigabit Ethernet.

B. PLC Manufacturer:

1. The Type 1 PLCs system design shown on the Contract Drawings and specified herein shall be Schneider Electric, Telemecanique, BMX M340 Automation Series.

C. The PLCs shall be housed in the applicable Main Instrument and Control Cabinets as shown on the PLANS. The respective Control Panel shall also house the Fiber-Optic patch panels, Uninterruptable Power Supplies (UPS), I/O Subsystems, and networking equipment. Refer to PLANS.

D. Refer to requirements of Section 17100.

1.03 RELATED SPECIFICATIONS

A. Refer to Section 17100.

B. This Section covers work related to the Distributed Control System DCS and its Subsystems. Note that this Section does not stand alone. Many key technical definitions,

functional requirements, training, submittals, etc. requirements for the DCS are given in Section 17100 “Process Instrumentation and Control System PICS”.

1.04 DISTRIBUTED CONTROL SYSTEM (DCS) SUBMITTALS

A. Hardware: Provide the following for all elements of the PLCs:

1. Block Diagram: A diagram showing all major PLCs components. Identify components by manufacturer and model number. Show interconnecting cables diagrammatically.

2. Bill of Materials: A list of all PLCs components. Group components by type and include:
   a. Component manufacturer, model number, and part number.
   b. Component description.
   c. Quantity supplied.
   d. Reference to component catalog information.

3. Descriptive Information: Catalog information, descriptive literature, performance specifications, internal wiring diagrams, power and grounding requirements, power consumption, and heat dissipation of all elements of the PLCs. Clearly mark all options and features proposed for this project.

4. Interconnecting Wiring Diagrams: Diagrams shall show all PLCs elements, their interconnecting cables and wiring terminations, and all terminations to all interacting elements and subsystems. Terminations shall be numbered. The I/O point numbers and terminations for circuits extending outside the PLCs shall be numbered/labeled the same as those shown on the PLANS.

5. Installation Details: Any modifications or further details as may be required to supplement the Contract Documents and adequately define the installation of the PLCs elements.

6. List of spare parts and expendables provided.

7. List of additional spare parts recommended.

B. Operations and Maintenance O&M Manuals:

1. Hardware: As minimum, provide the following:
   a. Final approved versions of all shop drawing submittals.
   b. Component Manufacturers’ O&M Manuals including manuals to cover installation, operation, maintenance, troubleshooting, and calibration.
   c. List of spare parts and expendables provided and list of spare parts recommended.

C. Refer to submittal requirements of Specifications Section 17100, Section 01300 and Section 01730 of the Contract Specifications.

D. Refer to the requirements of Specifications Section 17100.

PART 2 - PRODUCTS

2.01 GENERAL

A. Refer to Section 17100.

B. Equipment shall be designed to operate on a 60 Hertz alternating current power source at a nominal 120 volts, plus or minus 10 percent, except where specifically noted otherwise. Regulators and power supplies required for compliance with the above shall be provided. Where equipment requires voltage regulation, constant voltage transformers shall be supplied.

C. Materials and equipment used shall be U.L. approved wherever such approved equipment and materials are available

2.02 PROGRAMMABLE LOGIC CONTROLLERS (PLCS) - FUNCTIONAL REQUIREMENTS

A. General

1. The PLCs shall be used for data acquisition and control. The operations described hereinafter are intended to identify minimum acceptable performance. The Contractor shall provide all hardware and software features required to make the PLCs totally operational.

2. A suggested Process Control System block diagram including Programmable Logic Controllers locations is shown on the PLANS.

B. Availability

1. Subsystem Availability Calculation: The Subsystem availability (A) for the PLCS is defined as average of the individual PLC availabilities (Ai) times the nonspecific availability (NA). That i, A = NA*(Al*A2*A3 ... *An)/n, where n is the number of PLC's.

2. Availability Requirements: The PLCs availability shall be at least 99 percent.

3. Component and Backup Definitions: For purposes of the availability calculations, each PLC, each PLC power supply, its process I/O, and data highway interface is considered to be an individual component. There are no backup components.

2.03 PROGRAMMABLE LOGIC CONTROLLERS (PLCS) - GENERAL EQUIPMENT SPECIFICATIONS REQUIREMENTS

A. General

1. All components and interconnecting wiring shall be provided as required to satisfy the functional and operational requirements of this Specification.

B. Power Supply

1. Refer to the drawings for the required voltage level of the power supply. Power supply capacity shall be minimum 31W.

C. Communication Cables, Terminations and Splices

1. Communication Cables: Provide all cables for interconnection between all components of the DCS inside the and/or in duct/conduit banks, as applicable. These cables shall include cables to the PLCs I/O racks, power supplies, central processing units, fiber-optic components, PCs, Modems, etc. Also refer to fiber-optic communications requirements listed in this specification section.

D. Spares

1. Provide the following Spare equipment, for each type of component that is used on this project. Spares for components not used on this project need not be provided:
   a. Two (2) spare PLC processor units (CPU Modules) for each module furnished in this project for that PLC type, with spare memory cards, if applicable, for each CPU.
   b. A minimum of Ten Percent of the Number of PLC power supply units, with a minimum of Two (2), for each module furnished in this project for that PLC type.
   c. A minimum of Ten Percent of the Number of each size PLC rack, with a minimum of One (1) of each kind, for each module furnished in this project for that PLC type.
   d. A minimum of Ten Percent of the Number of each type of I/O Module, with a minimum of two (2) of each kind, for each Type of PLC specified, for each module furnished in this project for that PLC type.
   e. A minimum of Ten Percent of the Number of each type of PLC network communication Modules (NOM, NOE), with a minimum of two (2) of each kind, each module furnished in this project for that PLC type.
   f. A minimum of Ten percent of each remote I/O controller head processor, and remote I/O drop processor, but not less than two (2) of each type, each module furnished in this project for that PLC type.

2.04 PROGRAMMABLE LOGIC CONTROLLERS (PLCS) - HARDWARE COMPONENT SPECIFICATIONS

A. Programmable Logic Controllers PLCs: Each programmable logic controller shall consist of central processor, process controller, power supply, memory, input/output, interconnecting cables, and optional items as specified.

1. Each PLC shall be assumed to be a Type 1 PLC unless otherwise specifically noted.

2. General Specifications requirements for the PLCs are:
   a. Operating Temperature: 0 to 60 degrees C

   b. Humidity: 5 to 95% noncondensing

   c. Operating Voltage: 120 volts, 60-Hz ($\pm$ 10%)

B. Type 1 PLC:

1. Central Processor Units (CPUs) shall be as follows:
   a. The controller shall consist of a minimum of 4096 Kbytes, at minimum.

   b. The controller shall consist of 1 mini B Universal Serial Bus (USB) port, 1 Modbus communication port, and 1 Ethernet Modbus TCP/IP port

   c. For each CPU, furnish and install a minimum 16 MB FLASH EEPROM Memory Card, as manufactured by Schneider Electric for the respective CPU

   d. The control shall be the MODICON M340 BMX P34 2020 processor as manufactured by Schneider Electric

2. Input/Output: The input/output subsystem shall consist of all of the hardware for the CPU to communicate with the specified types of input and output modules. The input/output system shall consist of a communications interface module, an I/O controller, I/O base controller, I/O base, and the I/O modules. I/O throughput between the CPU and the I/O modules shall not be less than 1.0 Mbps.

3. PLC Rack Extender System:
   a. Where shown on plans, furnish and install PLC rack extender system. Rack extender system shall be furnished and installed complete with all required cables, modules, and terminators per recommendations and requirements of Schneider Electric.

   b. Cable: Furnish and install extender cord, length as required per PLANS, manufactured by Extender Module manufacturer, model number BMX XBC series as manufactured by Schneider Electric.

   c. Rack Extender Module: MODICON M340 Automation Series model number BMX XBE 1000 as manufactured by Schneider Electric for each rack interconnected by Rack Extender System.

4. Discrete Input Module DI:
   a. The programmable control system discrete inputs DIs shall be 120-volt ac, 60-Hz, with 16 points per module. The number and wiring to each active and spare DI point and module shall be per the requirements of the I/O point wiring schematics shown on the Contract Drawings. All 120-volt ac power to input/output modules shall have secondary surge protectors conforming to the requirements of IEEE Standard 28-1972 (ANSI C62.1-1971). Each point on DI modules shall have LED indication of ON/OFF status.

   b. Individual input point shall be capable of withstanding low energy common mode transients to 1,500 volts without catastrophic failure.

5. Discrete Output DO:
   a. The programmable logic controller system discrete outputs DOs shall all be isolated Form A contacts (relay output), rated 3-amps at 120volt ac, 60-Hz suitable for driving relays, solenoid operated valves, actuating motors starters, and similar inductive loads. Each output module shall consist of 8-individually isolated Form-A contacts, as shown on the Contract Drawings. Each point on DO modules shall have LED indication of ON/OFF status

   b. The output modules shall be protected form damage by inductively generated, NORMAL mode, and LOW energy common mode transients to 1,500 volts peak. The isolated discrete outputs shall open when a PLC failure is detected.

   c. Discrete output modules shall have individual status lights for each output point, and shall have barrier type terminal blocks for termination of the input/output wires. The module shall be constructed such that the field wires do not have to be removed (and physically disconnected from the respective terminals) while replacing the module.

6. Analog Input Module AI:
   a. The programmable control system analog inputs AIs shall be suitable for accepting a 4-20mA dc, -5V to 5V dc, 1V to 5V dc, 0 to 20mA dc signal, with 8-individually isolated points per AI module; i.e. no single ended or common analog signals shall be allowed. The input shall have an accuracy of plus or minus 0.3 percent of full scale. The input shall be capable of withstanding low common mode transients of 1,400 volts peak without catastrophic PLC failure.

   b. Furnish and install 28-pin Screw-type terminal block, Schneider Electric BMX FTB 2800 for each AI module.

7. Analog Output Module AO:
   a. The programmable control system analog outputs AOs shall be 4-20mA dc, with 4-individually isolated points per AO module; i.e. no single ended or common analog signals shall be allowed. The 4-20mA dc outputs shall be suitable for driving into a 0 to 600 ohm load with an accuracy of plus or minus 0.25 percent of full scale

8. The Type 1 PLC I/O subsystem shall be Modicon X80 Series.

9. Network Option Ethernet (NOE): Each PLC rack which consists of a CPU, shall also consist of two (2) Ethernet Modules, where each such module is an Ethernet interface device as follows
   a. Each module shall contain a minimum of 1 10/100BaseTX port with an RJ-45 connector

   b. The Ethernet communication shall be Full Duplex capable

   c. Each Ethernet module shall have support for TCP services, including: FTP server, BOOTP server, SNMP V2 agent, MODBUS TCP/IP client, MODBUS TCP/IP server, and I/O Scanner.

   d. The Ethernet Module shall be the Modicon Automation Series model number BMENOC0311 Module as manufactured by Schneider Electric.

10. RTD Module:
    a. The programmable control system RTD analog input module shall consist of four (4) input channels, with each channel suitable for accepting and each independently programmable for 2, 3, and 4 wire RTD inputs. Each channel shall at minimum be capable of accepting and each independently programmable to support the following RTD types:
        1) IEC Platinum 100 and IEC Platinum 1000, each with a corresponding input channel measurement range of –200°C to 850°C.
        2) American Platinum 100 and American Platinum 1000, each with a corresponding input channel measurement range of –100°C to 450°C.
        3) Nickel 100 and Nickel 1000, each with a corresponding input channel measurement range of –60°C to 180°C.
    b. The module shall posses a minimum of 750V channel to channel isolation and 1400V isolation between channel and bus.
    c. Each input channel of the module shall have an accuracy of plus or minus 0.15 percent of full scale over the entire RTD module's ambient operating temperature range of 0°C to 60°C.
    d. Accessories: Provide an RTD extension module for each RTD module provided, model number MODICON model number Telefast ABE-7CPA412. Provide an extender cord, length as required per PLANS, model number BMX FCW series.

11. Rack: Rack: The PLC rack shall have the X Bus interface backplane. Refer to the drawings for the rack size.

12. I/O Module Terminal Blocks
    a. With exception to the RTD and AI modules, furnish and install for each I/O module the Screw clamp terminal blocks, accepting up to two (2) AWG 15 wires per terminal, model BMXFTB2010 by Schneider Electric.

PART 3 - EXECUTION

3.01 GENERAL INSTALLATION

A. The ICS shall furnish labor, materials, equipment, and incidentals required to install the system in accordance with specification section 17100 and 17600.

B. The ICS shall be responsible for ensuring that field wiring for power and signal circuits is correct and wired in accordance with best industry practice. Also, the ICS shall be responsible for providing all necessary system grounding to insure a satisfactory functioning installation.

3.02 TESTS (GENERAL)

Refer to Section 17100.

3.03 OPERATIONAL READINESS TESTS (ORT)

Refer to Section 17100.

3.04 PERFORMANCE ACCEPTANCE TESTS (PAT)

Refer to Section 17100.

3.05 MEASUREMENT AND PAYMENT

A. No separate measurement or payment for work performed under this Section. All costs are included in the Base Bid.

END OF SECTION