CITY OF AUSTIN, TEXAS

Purchasing Office

REQUEST FOR PROPOSAL (RFP)

SOLICITATION NO: GAL0020

DATE ISSUED: JUNE 30, 2014

COMMODITY/SERVICE DESCRIPTION: TRANSMISSION & DISTRIBUTION STEEL POLES

REQUISITION NO.: RQM 1100 14062700420

COMMODITY CODE: 7254452, 72542

PRE-PROPOSAL CONFERENCE TIME AND DATE: 9:30AM ON JULY 14, 2014

LOCATION: TOWN LAKE CENTER, ASSEMBLY RM. 130, 721 BARTON SPRINGS RD., AUSTIN, TX 78704

FOR CONTRACTUAL AND TECHNICAL ISSUES CONTACT THE FOLLOWING AUTHORIZED CONTACT PERSON:

GAGE LOOTS
Supervising Senior Buyer

Phone: (512) 322-6251
E-Mail: gage.loots@austinenergy.com

PROPOSAL DUE PRIOR TO: 3:00PM ON AUGUST 8, 2014

PROPOSAL CLOSING TIME AND DATE: 3:00PM ON AUGUST 8, 2014

LOCATION: MUNICIPAL BUILDING, 124 W 8th STREET RM 308, AUSTIN, TEXAS 78701

When submitting a sealed Offer and/or Compliance Plan, use the proper address for the type of service desired, as shown below:

P.O. Address for US Mail	Street Address for Hand Delivery or Courier Service
City of Austin	City of Austin, Municipal Building
Purchasing Office-Response Enclosed	Purchasing Office-Response Enclosed
P.O. Box 1088	124 W 8th Street, Rm 310
Austin, Texas 78767-8845	Austin, Texas 78701
	Reception Phone: (512) 974-2500

To ensure prompt delivery, all packages SHALL BE CLEARLY MARKED ON THE OUTSIDE "Purchasing Office-Response Enclosed" along with the offeror's name & address, solicitation number and due date and time. See Section 0200 Solicitation Instructions for more details.

All Offers (including Compliance Plans) that are not submitted in a sealed envelope or container will not be considered.

SUBMIT 1 ORIGINAL, 5 COPIES, AND 1 ELECTRONIC COPY (CD/FLASH) OF YOUR RESPONSE

*****SIGNATURE FOR SUBMITTAL REQUIRED ON PAGE 3 OF THIS DOCUMENT*****

This solicitation is comprised of the following required sections. Please ensure to carefully read each section including those incorporated by reference. By signing this document, you are agreeing to all the items contained herein and will be bound to all terms.

SECTION NO.	TITLE	PAGES
0100	STANDARD PURCHASE DEFINITIONS	*
0200	STANDARD SOLICITATION INSTRUCTIONS	*
0300	STANDARD PURCHASE TERMS AND CONDITIONS	*
0400	SUPPLEMENTAL PURCHASE PROVISIONS	8
0500	SPECIFICATION E-0758	38
0505	SPECIFICATION E-1114	32
0600	PROPOSAL PREPARATION INSTRUCTIONS & EVALUATION FACTORS	8
0605	LOCAL BUSINESS PRESENCE IDENTIFICATION FORM – Complete and return	1
0700	REFERENCE SHEET – Complete and return	2
0705	COST PROPOSAL SHEET FOR TRANSMISSION	3
0710	COST PROPOSAL SHEET FOR DISTRIBUTION	5
0800	NON-DISCRIMINATION CERTIFICATION	*
0805	NON-SUSPENSION OR DEBARMENT CERTIFICATION	*
0810	NON-COLLUSION, NON-CONFLICT OF INTEREST, AND ANTI-LOBBYING CERTIFICATION	*
0835	NONRESIDENT BIDDER PROVISIONS – Complete and return	1

*** Documents are hereby incorporated into this Solicitation by reference, with the same force and effect as if they were incorporated in full text. The full text versions of these Sections are available, on the Internet at the following online address:**

http://www.austintexas.gov/financeonline/vendor_connection/index.cfm#STANDARDBIDDOCUMENTS

If you do not have access to the Internet, you may obtain a copy of these Sections from the City of Austin Purchasing Office located in the Municipal Building, 124 West 8th Street, Room #308 Austin, Texas 78701; phone (512) 974-2500. Please have the Solicitation number available so that the staff can select the proper documents. These documents can be mailed, expressed mailed, or faxed to you.

I agree to abide by the City's MBE/WBE Procurement Program Ordinance and Rules. In cases where the City has established that there are no M/WBE subcontracting goals for a solicitation, I agree that by submitting this offer my firm is completing all the work for the project and not subcontracting any portion. If any service is needed to perform the contract that my firm does not perform with its own workforce or supplies, I agree to contact the Small and Minority Business Resources Department (SMBR) at (512) 974-7600 to obtain a list of MBE and WBE firms available

to perform the service and am including the completed No Goals Utilization Plan with my submittal. This form can be found Under the Standard Bid Document Tab on the Vendor Connection Website:

http://www.austintexas.gov/financeonline/vendor_connection/index.cfm#STANDARDBIDDOCUMENTS

If I am awarded the contract I agree to continue complying with the City's MBE/WBE Procurement Program Ordinance and Rules including contacting SMBR if any subcontracting is later identified.

The undersigned, by his/her signature, represents that he/she is submitting a binding offer and is authorized to bind the respondent to fully comply with the solicitation document contained herein. The Respondent, by submitting and signing below, acknowledges that he/she has received and read the entire document packet sections defined above including all documents incorporated by reference, and agrees to be bound by the terms therein.

Company Name:_____

Federal Tax ID No.: _____

Printed Name of Officer or Authorized Representative:_____

Title:_____

Signature of Officer or Authorized Representative:_____

Date: _____

E-Mail Address: _____

Phone Number: _____

*** Proposal response must be submitted with this Offer sheet to be considered for award**

Section 0605: Local Business Presence Identification

A firm (Offeror or Subcontractor) is considered to have a Local Business Presence if the firm is headquartered in the Austin Corporate City Limits, or has a branch office located in the Austin Corporate City Limits in operation for the last five (5) years. The City defines headquarters as the administrative center where most of the important functions and full responsibility for managing and coordinating the business activities of the firm are located. The City defines branch office as a smaller, remotely located office that is separate from a firm's headquarters that offers the services requested and required under this solicitation.

OFFEROR MUST SUBMIT THE FOLLOWING INFORMATION FOR EACH LOCAL BUSINESS (INCLUDING THE OFFEROR, IF APPLICABLE) TO BE CONSIDERED FOR LOCAL PRESENCE.

NOTE: ALL FIRMS MUST BE IDENTIFIED ON THE MBE/WBE COMPLIANCE PLAN OR NO GOALS UTILIZATION PLAN, SECTION 0900 OF THE SOLICITATION.

USE ADDITIONAL PAGES AS NECESSARY

OFFEROR:

Name of Local Firm						
Physical Address						
Is Firm located in the Corporate City Limits? (circle one)	Yes			No		
In business at this location for past 5 yrs?	Yes			No		
Location Type:	Headquarters	Yes	No	Branch	Yes	No

SUBCONTRACTOR(S):

Name of Local Firm						
Physical Address						
Is Firm located in the Corporate City Limits? (circle one)	Yes			No		
In business at this location for past 5 yrs?	Yes			No		
Location Type:	Headquarters	Yes	No	Branch	Yes	No

SUBCONTRACTOR(S):

Name of Local Firm	
Physical Address	

Is Firm located in the Corporate City Limits? (circle one)	Yes			No		
In business at this location for past 5 yrs?	Yes			No		
Location Type:	Headquarters	Yes	No	Branch	Yes	No

Section 0700: Reference Sheet
Please include the following information if required in the solicitation:

Responding Company Name _____

1. Company's Name _____

   Name and Title of Contact _____

   Present Address _____

   City, State, Zip Code _____

   Telephone Number (_____)_____ Fax Number (_____)_____

   Email Address _____

2. Company's Name _____

   Name and Title of Contact _____

   Present Address _____

   City, State, Zip Code _____

   Telephone Number (_____)_____ Fax Number (_____)_____

   Email Address _____

3. Company's Name _____

   Name and Title of Contact _____

   Present Address _____

   City, State, Zip Code _____

Telephone Number (_____)_____ Fax Number (_____)_____

Email Address _____

4. Company's Name _____

Name and Title of Contact _____

Present Address _____

City, State, Zip Code _____

Telephone Number (_____)_____ Fax Number (_____)_____

Email Address _____

5. Company's Name _____

Name and Title of Contact _____

Present Address _____

City, State, Zip Code _____

Telephone Number (_____)_____ Fax Number (_____)_____

Email Address _____

Section 0835: Non-Resident Bidder Provisions

Company Name _____

A. Bidder must answer the following questions in accordance with Vernon's Texas Statues and Codes Annotated Government Code 2252.002, as amended:

   Is the Bidder that is making and submitting this Bid a "Resident Bidder" or a "non-resident Bidder"?

   Answer:_____

   (1) Texas Resident Bidder- A Bidder whose principle place of business is in Texas and includes a Contractor whose ultimate parent company or majority owner has its principal place of business in Texas.
   (2) Nonresident Bidder- A Bidder who is not a Texas Resident Bidder.

B. If the Bidder id a "Nonresident Bidder" does the state, in which the Nonresident Bidder's principal place of business is located, have a law requiring a Nonresident Bidder of that state to bid a certain amount or percentage under the Bid of a Resident Bidder of that state in order for the nonresident Bidder of that state to be awarded a Contract on such bid in said state?

   Answer:_____ Which State:_____

C. If the answer to Question B is "yes", then what amount or percentage must a Texas Resident Bidder bid under the bid price of a Resident Bidder of that state in order to be awarded a Contract on such bid in said state?

   Answer:_____

CITY OF AUSTIN
PURCHASING OFFICE
SUPPLEMENTAL PURCHASE PROVISIONS
RFP GAL0020 – TRANSMISSION & DISTRIBUTION STEEL POLES

The following Supplemental Purchasing Provisions apply to this solicitation:

1. **EXPLANATIONS OR CLARIFICATIONS** (reference paragraph 5 in Section 0200)

   All requests for explanations or clarifications must be submitted in writing to the Purchasing Office no later than 8:00 AM on July 16, 2014 to gage.loots@austinenergy.com.

2. **INSURANCE** (Insurance is required for this solicitation.)

   A. General Requirements. See Section 0300, Standard Purchase Terms and Conditions, paragraph 32, entitled Insurance, for general insurance requirements.

      i. The Contractor shall provide a Certificate of Insurance as verification of coverages required below to the City at the below address prior to contract execution and within 14 calendar days after written request from the City. Failure to provide the required Certificate of Insurance may subject the Offer to disqualification from consideration for award

      ii. The Contractor shall not commence work until the required insurance is obtained and until such insurance has been reviewed by the City. Approval of insurance by the City shall not relieve or decrease the liability of the Contractor hereunder and shall not be construed to be a limitation of liability on the part of the Contractor.

      iii. The Contractor must also forward a Certificate of Insurance to the City whenever a previously identified policy period has expired, or an extension option or holdover period is exercised, as verification of continuing coverage.

      iv. The Certificate of Insurance, and updates, shall be mailed to the Contract Manager and to following address:

      City of Austin Purchasing Office
      P. O. Box 1088
      Austin, Texas 78767

   B. Specific Coverage Requirements. The Contractor shall at a minimum carry insurance in the types and amounts indicated below for the duration of the Contract, including extension options and hold over periods, and during any warranty period. These insurance coverage's are required minimums and are not intended to limit the responsibility or liability of the Contractor.

      i. Worker's Compensation and Employers' Liability Insurance. Coverage shall be consistent with statutory benefits outlined in the Texas Worker's Compensation Act (Section 401). The minimum policy limits for Employer's Liability are $100,000 bodily injury each accident, $500,000 bodily injury by disease policy limit and $100,000 bodily injury by disease each employee.

         (1) The Contractor's policy shall apply to the State of Texas and include these endorsements in favor of the City of Austin:
            (a) Waiver of Subrogation, Form WC 420304, or equivalent coverage
            (b) Thirty (30) days Notice of Cancellation, Form WC 420601, or equivalent coverage

      ii. Commercial General Liability Insurance. The minimum bodily injury and property damage per occurrence are $2,000,000 for coverages A (Bodily Injury and Property Damage) and B (Personal and Advertising Injury).

(1) The policy shall contain the following provisions:
   (a) Contractual liability coverage for liability assumed under the Contract and all other Contracts related to the project.
   (b) Contractor/Subcontracted Work.
   (c) Products/Completed Operations Liability for the duration of the warranty period.
   (d) If the project involves digging or drilling provisions must be included that provide Explosion, Collapse, and/or Underground Coverage (X,C,U).

(2) The policy shall also include these endorsements in favor of the City of Austin:
   (a) Waiver of Subrogation, Endorsement CG 2404, or equivalent coverage
   (b) Thirty (30) days Notice of Cancellation, Endorsement CG 0205, or equivalent coverage
   (c) The City of Austin listed as an additional insured, Endorsement CG 2010, or equivalent coverage

iii. Business Automobile Liability Insurance. The Contractor shall provide coverage for all owned, non-owned and hired vehicles with a minimum combined single limit of $500,000 per occurrence for bodily injury and property damage. Alternate acceptable limits are $250,000 bodily injury per person, $500,000 bodily injury per occurrence and at least $100,000 property damage liability per accident.

(1) The policy shall include these endorsements in favor of the City of Austin:
   (a) Waiver of Subrogation, Endorsement TE 2046A, or equivalent coverage
   (b) Thirty (30) days Notice of Cancellation, Endorsement TE 0202A, or equivalent coverage
   (c) The City of Austin listed as an additional insured, Endorsement TE 9901B, or equivalent coverage.

C. Endorsements. The specific insurance coverage endorsements specified above, or their equivalents must be provided. In the event that endorsements, which are the equivalent of the required coverage, are proposed to be substituted for the required coverage, copies of the equivalent endorsements must be provided for the City's review and approval.

3. TERM OF CONTRACT

A. The Contract shall be in effect for an initial term of twenty-four (24) months and may be extended thereafter for up to three (3) additional twelve (12) month periods, subject to the approval of the Contractor and the City Purchasing Officer or his designee.

B. Upon expiration of the initial term or period of extension, the Contractor agrees to hold over under the terms and conditions of this agreement for such a period of time as is reasonably necessary to re-solicit and/or complete the project (not to exceed 120 days unless mutually agreed on in writing).

C. Upon written notice to the Contractor from the City's Purchasing Officer or his designee and acceptance of the Contractor, the term of this contract shall be extended on the same terms and conditions for an additional period as indicated in paragraph A above. A price increase, subject to the provisions of this Contract, may be requested by the Contractor (for each period of extension) for approval by the City's Purchasing Officer or his designee.

4. QUANTITIES

The quantities listed herein are annual estimates. The City reserves the right to purchase more or less of these quantities as may be required during the Contract term. Quantities will be as needed and specified by the City with each order.

5. **DELIVERY REQUIREMENTS**

Location:	Days: Monday – Thursday
City of Austin	Times: 7:00 AM – 2:00 PM
Austin Energy	Other locations may be specified as directed by the City of Austin at no additional cost.
10001 Decker Lane	
Austin, Texas 78724	

A. Contractor shall provide order confirmation to the City within 72 hours of order placement.

B. The order must be shipped complete unless arrangements for partial shipments are made in advance.

C. Contractor shall provide a minimum ten (10) day notice of the date when ordered items will be ready for shipment and the manner of shipment. Such notice will include what is being shipped and instructions concerning any equipment or services required at the point of delivery to unload and care for these items.

D. Contractor shall contact Doug Weise at 512-505-7023 at time of shipment to schedule delivery, no less than 48 hours prior to delivery. The Contractor (or delivery personnel) shall contact Doug Weise 24 hours prior to delivery and again two hours prior to arrival on site. **Unscheduled deliveries shall not be accepted. Austin Energy is not responsible for delays in unloading if delivery is unscheduled.**

E. Shipping and Delivery

i. Hardware such as bolts, nuts and washers shall be shipped in boxes or crates. Individual boxes or crates are not to exceed 150 pounds in weight. Each box shall contain like pieces. The boxes or crates shall be of sufficient strength to resist failure during transit, storage, and subsequent handling in the field under dry or wet weather conditions.

ii. All shipping containers shall be plainly marked by stencil or a firmly fastened tag with the following information:

a. City of Austin

b. Contract No. _____

c. Contract Item No. _____

d. Type of Accessory _____

e. Quantity _____

f. Destination _____

iii. Pole sections shall be placed so that a minimum clearance of four inches is provided between the floor of car, barge, or truck. Pole sections shall be stacked with timber separators but not more than three tiers high. Structures shall be placed carefully to prevent shifting and damage to galvanizing or distortion of members during transit. Timber separators shall be either four by four inch (4” x 4”) oak or pine. **STRUCTURES SHALL BE LOADED, UNLOADED AND SECURED WITH NYLON STRAPS.**

iv. Removable pole tops, inspection hand hole covers, and arm end caps shall be secured to appropriate steel members prior to shipping.

v. Anchor bolts and embedded sections shall be shipped in advance of above ground sections of structures.

F. Contractor shall provide, with each delivery, a Shipping or Delivery Ticket showing the description of each item, quantity, and unit price.

G. Unless requested by the City, deliveries shall not be made on City-recognized legal holidays (see paragraph 52 in Section 0300).

6. **APPROVAL DRAWINGS**

A. All drawings furnished by the Contractor must be signed and sealed by a licensed Engineer.

B. Approval Drawings

i. Three (3) copies of shop detail drawing applicable to design and/or detail (and to changes when fabricating to Austin Energy details) are to be forwarded to the applicable Project Engineer or designee for approval prior to fabrication.

ii. Drawings shall include the following general assemble information:

a. Weight schedule – basic structure components shaft extensions, anchor bolt assemblies and nuts, bolts, and washers used for assembly.

b. Bill of Material including:

c. Member mark number

d. Member dimensions

e. Member quantities

f. Bolts and nut size, length and quantities

g. Round filter size, length and quantities

h. Anchor bolt details and setting data

i. Base reactions

j. Functions

iii. The approval of a drawing by the City shall not serve as a complete check, but will indicate only that the general method of fabrication and detailing is satisfactory. Approval of the drawings by the City does not relieve the Contractor from responsibility for the correctness of the drawings. The Contractor shall, at the Contractor's sole expense, correct any errors in the drawing.

iv. One (1) set of electronic drawing files (AutoCAD 2008) shall be submitted with or prior to the delivery of the structures. PDF format or any other type other than AutoCAD 2008 will not be accepted. The electronic drawing shall be submitted on AE border. These drawings shall show all details necessary to fabricate and erect of the structure.

v. The Contractor, by accepting an order from Austin Energy, acknowledges that Austin Energy has the right to use the final shop fabrication detail in any manner beneficial to Austin Energy including use by other manufactures in the fabrication of like structures for Austin Energy.

7. **REPORTS**

A. One (1) copy of the steel mill reports covering all structures furnished in accordance with these specifications shall be submitted to the Contract Manager or designee prior to the start of fabrication and upon receipt of steel shipments thereafter.

B. One (1) copy of weld inspection reports covering all structures furnished in accordance with these specifications shall be submitted directly to the Project Engineers and the Contract Manager.

8. **SERVICE BULLETINS**

Service Bulletins shall be provided to the Contract Manager or designee. The Contractor shall be responsible for providing any and all service bulletins/advisories on the material provided after delivery. This shall be an ongoing process provided by the Contractor to keep the Purchaser informed of any mechanical and/or electrical problems which may cause breakdown or failure of the structure or its components, or more importantly, jeopardize personnel working near the structure. This service shall continue beyond the standard warranty period and any fee for this service shall be included in the structure price.

9. **INVOICES and PAYMENT** (reference paragraphs 12 and 13 in Section 0300)

A. Invoices shall contain a non-duplicated invoice number and the information required in Section 0300, paragraph 12, entitled "Invoices." Invoices received without all required information cannot be processed and will be returned to the vendor.

Invoices shall be sent the Contract Manager and mailed to the below address:

	City of Austin
Department	Austin Energy
Attn:	Payments Section
Address	PO Box 3546
City, State Zip Code	Austin, Texas 78764

B. The Contractor agrees to accept payment by check or Electronic Funds Transfer (EFT) for all goods and/or services provided under the Contract.

10. **NON-COLLUSION, NON-CONFLICT OF INTEREST, AND ANTI-LOBBYING**

A. On November 10, 2011, the Austin City Council adopted Ordinance No. 20111110-052 amending Chapter 2.7, Article 6 of the City Code relating to Anti-Lobbying and Procurement. The policy defined in this Code applies to Solicitations for goods and/or services requiring City Council approval under City Charter Article VII, Section 15 (Purchase Procedures). During the No-Contact Period, Offerors or potential Offerors are prohibited from making a representation to anyone other than the Authorized Contact Person in the Solicitation as the contact for questions and comments regarding the Solicitation.

B. If during the No-Contact Period an Offeror makes a representation to anyone other than the Authorized Contact Person for the Solicitation, the Offeror's Offer is disqualified from further consideration except as permitted in the Ordinance.

C. If a Respondent has been disqualified under this article more than two times in a sixty (60) month period, the Purchasing Officer shall debar the Offeror from doing business with the City for a period not to exceed three (3) years, provided the Respondent is given written notice and a hearing in advance of the debarment.

D. The City requires Offerors submitting Offers on this Solicitation to provide a signed Section 0810, Non-Collusion, Non-Conflict of Interest, and Anti-Lobbying Affidavit, certifying that the Offeror has not in any way directly or indirectly made representations to anyone other than the Authorized Contact Person during the No-Contact Period as defined in the Ordinance The text of the City Ordinance is posted on the Internet at: http://www.ci.austin.tx.us/edims/document.cfm?id=161145

11. **LIQUIDATED DAMAGES**

Time is of the essence in the performance of the Contract; therefore, the Contractor shall strictly adhere to the Contract delivery schedule. No changes in the delivery schedule shall be effective unless in writing executed by both the City and the Contractor. The parties agree that if, due to no fault of the City, delivery of any material or performance of any service is delayed beyond the time specified in the Contract, the actual damages sustained by the City because of such delay will be uncertain and difficult to determine, and that the reasonable foreseeable damage incurred by the City is hereby stipulated to be 2% of the value of the delayed delivery per calendar day. The Contractor therefore agrees to pay, and the City agrees to accept, as liquidated damages, the sum of 2% of the value of the delayed delivery per calendar day for each calendar day of delay.

12. **ECONOMIC PRICE ADJUSTMENT:** (Please note that this is a sample clause as a placeholder. Proposers are required to submit the adjustment clause with their Proposal, but may use this language as a base.)

A. **Price Adjustments:** Prices shown in this Contract shall remain firm for the first twelve (12) months of the Contract. After that, in recognition of the potential for fluctuation of the Contractor's cost, a price adjustment (increase or decrease) may be requested by either the City or the Contractor on the anniversary date of the Contract or as may otherwise be specified herein. The percentage change between the contract price and the requested price shall not exceed the percentage change between the specified index in effect on the date the solicitation closed and the most recent, non-preliminary data at the time the price adjustment is requested. The requested price adjustment shall not exceed fifteen percent (15%) for any single line item and in no event shall the total amount of the contract be automatically adjusted as a result of the change in one or more line items made pursuant to this provision. Prices for products or services unaffected by verifiable cost trends shall not be subject to adjustment.

B. **Effective Date:** Approved price adjustments will go into effect on the first day of the upcoming renewal period or anniversary date of contract award and remain in effect until contract expiration unless changed by subsequent amendment.

C. **Adjustments:** A request for price adjustment must be made in writing and submitted to the other Party prior to the yearly anniversary date of the Contract; adjustments may only be considered at that time unless otherwise specified herein. Requested adjustments must be solely for the purpose of accommodating changes in the Contractor's direct costs. Contractor shall provide an updated price listing once agreed to adjustment(s) have been approved by the parties.

D. **Indexes:** In most cases an index from the Bureau of Labor Standards (BLS) will be utilized; however, if there is more appropriate, industry recognized standard then that index may be selected.

i. The following definitions apply:
(1) **Base Period:** Month and year of the original contracted price (the solicitation close date).
(2) **Base Price:** Initial price quoted, proposed and/or contracted per unit of measure.
(3) **Adjusted Price:** Base Price after it has been adjusted in accordance with the applicable index change and instructions provided.
(4) **Change Factor:** The multiplier utilized to adjust the Base Price to the Adjusted Price.
(5) **Weight %:** The percent of the Base Price subject to adjustment based on an index change.

ii. **Adjustment-Request Review:** Each adjustment-request received will be reviewed and compared to changes in the index(es) identified below. Where applicable:
(1) Utilize final Compilation data instead of Preliminary data
(2) If the referenced index is no longer available shift up to the next higher category index.

iii. **Index Identification:** Complete table as they may apply.

Weight % or $ of Base Price:	
Database Name:	
Series ID:	
☐ Not Seasonally Adjusted	☐ Seasonally Adjusted
Geographical Area:	
Description of Series ID:	
This Index shall apply to the following items of the Bid Sheet / Cost Proposal:	

Weight % or $ of Base Price:	
Database Name:	
Series ID:	
☐ Not Seasonally Adjusted	☐ Seasonally Adjusted
Geographical Area:	
Description of Series ID:	
This Index shall apply to the following items of the Bid Sheet / Cost Proposal:	

E. **Calculation:** Price adjustment will be calculated as follows:

Single Index: Adjust the Base Price by the same factor calculated for the index change.

Index at time of calculation
Divided by index on solicitation close date
Equals Change Factor
Multiplied by the Base Rate
Equals the Adjusted Price

F. If the requested adjustment is not supported by the referenced index, the City, as its sole discretion, may consider approving an adjustment on fully documented market increases.

13. **CONTRACT MANAGER**

The following person is designated as Contract Manager, and will act as the contact point for contractual matters between the City and the Contractor during the term of the Contract:

Chet Oszust Contract Compliance Specialist, Sr.
Austin Energy, Materials Control Section Town Lake Center
721 Barton Springs Road Austin, Texas 78704
Phone Number: (512) 322-6391 E-mail Address: chester.oszust@austinenergy.com

14. **PROJECT ENGINEERS**

The following persons are designed as the Project Engineers for distribution and transmission and will act as the contact point for technical matters between the City and the Contractor.

A. Distribution Engineer

Troy Vessel
St. Elmo Service Center
4411 Meinardus Dr.
Austin, Texas 78744
Office: 512 505-7097
Email: troy.vessel@austinenergy.com

B. Transmission Engineer

David Sloan
Kramer Service Center
2526 Kramer Lane
Austin, Texas 78758
Office: 512-505-7115
Email: david.sloan@austinenergy.com

*Note: The above listed Contract Manager and Project Engineers are not the authorized Contact Person for purposes of the **NON-COLLUSION, NON-CONFLICT OF INTEREST, AND ANTI-LOBBYING Provision** of this Section; and therefore, contact with the Contract Manager is prohibited during the no contact period.

Specification E-0758
May 16, 2014

AUSTIN ENERGY, ELECTRIC UTILITY DEPARTMENT

PURCHASE SPECIFICATION

FOR

DESIGN AND FABRICATION OF

TRANSMISSION STRUCTURES

DATE	PREPARED BY	ISSUANCE/REVISION	APPROVAL PROCESS SUPV. / MATERIALS SUPV.
11/20/90	D. Wahl	Revision	
09/23/92	L. Pham	Revision	
10/22/92	L. Pham	Revision	
12/09/93	M. Coleman	Revision	
02/20/96	Peter Soosay	Revision	
07/18/97	David Sloan	Revision	Clint Rogas / Bill Germany
07/20/99	Peter Soosay	Revision	
12/27/99	Steven Booher	Revision	Steven Booher / Allen Bearden
7/03/02	L. Pham	Revision	
06/29/07	Peter G. Soosay	Revision	
07/11/08	J. Gauthier	Revision	David Sloan
07/30/08	J. Gauthier	Revision	David Sloan
09/28/11	J. Gauthier	Revision	David Sloan
05/23/13	J. Gauthier	Revision	David Sloan
05/16/14	J. Gauthier	Revision	David Sloan

TABLE OF CONTENTS

1.0 SCOPE AND CLASSIFICATION
- 1.1 Scope
- 1.2 Classification

2.0 APPLICABLE STANDARDS

3.0 PHYSICAL REQUIREMENTS
- 3.1 Material
- 3.2 Fabrication
- 3.3 Pole Shafts
- 3.4 Embedded Structures
- 3.5 Anchor Base Structures
- 3.6 Arms and Other Structure Attachments

4.0 GENERAL REQUIREMENTS AND INFORMATION
- 4.1 Design Loading
- 4.2 Design Files
- 4.3 Inspections
- 4.4 Deliverables

ATTACHMENT 1 – POLE LIST

ATTACHMENT 2 – POLE DRAWINGS

ATTACHMENT 3 – ADDER ITEM LIST

ATTACHMENT 4 – ADDER ITEM DRAWINGS

CITY OF AUSTIN ELECTRIC UTILITY DEPARTMENT
PURCHASE SPECIFICATION
FOR
DESIGN AND FABRICATION OF
TRANSMISSION STRUCTURES

1.0 SCOPE AND CLASSIFICATION

1.1 Scope

1.1.1 This specification sets forth the requirements for design, material, fabrication, finishing, and shipping of galvanized lattice steel and galvanized and self-weathering steel transmission structures.

1.1.2 The City of Austin Electric Utility Department is hereinafter referred to as Austin Energy (AE).

1.1.3 Austin Energy (AE) requires a qualified Fabricator to supply transmission structures. The structures shall be towers made of galvanized lattice steel or poles made of either galvanized steel or self-weathering steel. The poles shall be symmetrical about the transverse and longitudinal axis, with a gradual and constant taper.

1.1.4 The term “Engineer” refers to the Project Engineer for Austin Energy or his designated representative.

1.1.5 The term “Fabricator” refers to the party selected to design, fabricate, and furnish the product. Fabricator shall also have the same meaning as Contractor as defined in the Standard Purchase Definitions (Section 0100).

1.2 Classification

1.2.1 Attachments 1, 2, 3 & 4 further define the design requirements for transmission structures.

2.0 APPLICABLE STANDARDS

Reference to standard specifications shall be the latest revision of such specifications with abbreviations as listed below:

AISC	-	American Institute of Steel Construction
ANSI	-	American National Standards Institute
ASCE	-	American Society of Civil Engineers
ASME	-	American Society of Mechanical Engineers
ASNT	-	American Society of Non-Destructive Testing
ASTM	-	American Society of Testing and Materials
AWS	-	American Welding Society
NEMA	-	National Electrical Manufacturers Association
NESC	-	National Electrical Safety Code
SSPC	-	Steel Structures Painting Council

3.0 PHYSICAL REQUIREMENTS

3.1 Material

3.1.1 All material used in the structure shall have a minimum yield strength equal to or greater than the value used in the design calculations.

3.1.2 Rolled shapes and plate shall comply with the following ASTM specifications:

Carbon steel	A-36
High strength carbon steel	A-440
High strength low alloy steel	A-242
	A-441
	A-572
	A-633
	A-36 Modified
Self-Weathering	A-871
	A-588

3.1.3 Structural Plate material shall be mill-certified to meet an impact of 15 ft-lb. at -20° F in the longitudinal direction using the Charpy V-Notch Impact Test in accordance with ASTM A673.There shall be an average of three (3) tests with no one test below 10ft-lb. The location of the test samples shall be in accordance with ASTM A673.

3.1.4 Assembly bolts shall be A-394, A-325, A-449, A-490 or A-354. Bolts and nuts shall have a class 2 tolerance as defined by ANSI No. B1.1 after galvanizing or self-weathering finish has formed.

3.2 Fabrication

3.2.1 Fabrication shall be in accordance with AISC specifications and shall be equal to the best shop practice of modern steel fabricating shops.

3.2.2 Welding

A. Design of all joints or seams and all welding procedures shall be in accordance with Structural Welding Code AWS D1.1, including the latest addenda. B. Welders shall be qualified on all welds used during the fabrication process in accordance with AWS D1.1.

C. Upon request by the Engineer, Fabricator shall provide weld design calculations for arms, baseplates, and other joint details.

3.2.3 Quality and Finish

A. Option “A” - Hot-dipped galvanized

1. Steel shall be hot dipped galvanized inside and outside after fabrication. The galvanizing shall be in accordance with ASTM Specification A-123. Precautions shall be taken against hydrogen embrittlement in accordance with ASTM Specification A-143. Double dipping is not allowed. Sections using metalizing shall be sealed to prevent internal corrosion.

2. Galvanized structures shall be free and clear of acid drops, tear drop edges, flaking zinc, rough appearance, trapped slag, holes covered with zinc membrane and in general shall be smooth, clean, attractive in appearance and unscarred when received. Pieces having galvanizing which do not meet these requirements, in the sole opinion of the Engineer, shall be rejected.

B. Option “B” - Self-weathering

1. Steel surfaces shall be blast cleaned after fabrication in accordance with the Steel Structures Painting Council’s Surface Preparation Specification SP6, commercial finish, to ensure rapid and uniform weathering.

2. Self-weathering structures shall have an initial formation of patina that is consistent in thickness and appearance. Pole sections shall be sealed to eliminate the need for internal corrosion protection. Pieces, which do not meet these requirements, in the sole opinion of the Engineer, shall be rejected.

C. All punching and drilling shall conform to the following:

1. Bolt holes shall be punched, drilled or oxygen cut for tubular steel poles. Bolt holes shall be punched or drilled for lattice towers.

2. The finished diameter of the bolt hole shall be 1/8" larger than the nominal bolt diameter.

3. Finished edges shall be clean cut and free from burrs and chips. Roughness of oxygen-cut surfaces shall not be greater than that defined by AWS D1.1.

4. All holes shall be cylindrical and perpendicular to the principal surface. Slotting of mispunched holes is not permitted.

5. Plugging and welding mispunched holes shall be kept to a minimum. Pieces that, in the opinion of the Engineer, have excessive plugs and welds will be rejected.

6. All holes drilled in the pole wall shall be plugged by an insert capable of remaining in place for the life of the pole.

7. Connections shall be arranged to minimize the eccentricity of loading on the member.

3.2.4 Identification Marking

A. Each piece of structure, except the bottom piece, shall have two 3”x5” steel name plates permanently affixed five (5) feet above the base. The bottom piece of structure shall have the steel name plates permanently affixed five (5) feet above the groundline. The plates shall be located and stamped according to the attached drawing.

B. Each piece of structure shall have its unique identifier welded above each of the name plates according to the attached drawing.

C. All identification markings shall be clearly legible after galvanizing or self-weathering finish has formed.

3.2.5 Balance Point Marking

A. Each piece of structure shall have the balance point indicated by “BP”, at least three inches (3”) in height, welded onto the outside of the pole. This marking shall be placed on the same faces as the name plates if possible, or on one of the adjacent faces if the unique identifier is in the way.

3.2.6. Tolerances

A. Maximum tolerance allowed on finished work shall conform to the following:

1.	Cutting length	± 1/16"
2.	Center to center distance of end holes on a piece	± 1/16"
3.	Variation of gage lines	± 1/32"
4.	Variation of center to center spacing of a group or cluster of holes	± 1/32"
5.	Compression members shall be straight to a tolerance of 1/1000 of the total length	± 1/32"

6. All material shall be free of deformations, bends, twists, or kinks. Straightening of damaged material shall not be permitted.

B. Fabricator shall size assembly bolts without allowances for washers, unless specifically requested. All bolts shall be of the coarse thread series furnished with self locking "Ancolock" hex nuts or equivalent unless otherwise specified. All bolts shall be of such a length that they pass entirely through the nut and have a minimum projection of two complete threads. Locking of nuts shall be by both mechanical method between the mated threads of the nuts and bolts, and by the application of "Ancolock" or equivalent self-locking nuts to all assembly bolts.

C. A five (5) percent overage of bolts and self-locking nuts shall be included.

3.2.7 Modifications

A. Structures are to be fabricated in accordance with detailed drawings furnished by the Fabricator for approval of the Engineer.

B. For fabrication only orders, minor deviations in member layout to accommodate variations in shop practices will be permitted provided that these deviations do not materially alter the configuration of the structures and do not reduce the strength of the structures. When such deviations in member layout are made, drawings showing these deviations shall be submitted to the Engineer for approval and the originals of such drawings shall become the property of Austin Energy upon completion of the order.

3.3 Pole Shafts

3.3.1 Pole shafts used in the structures shall be a minimum of twelve (12) sides and tapered. Taper shall not exceed 0.5 inches per linear for foot for 60 DEGREE and 90 DEGREE poles. Taper shall not exceed 0.4 inches per linear foot for all other poles.

3.3.2 Shaft sections up to 55 feet in length shall be furnished as one piece unless otherwise specified by the Engineer.

3.3.3 Slip-jointed poles shall not have a splice joint of less than 1 1/2 times the distance between the flats.

3.3.4 Four (4) jacking vangs per splice joint shall be welded to opposite walls of the pole shaft in order to accommodate a hydraulic jacking device for field assembly. The jacking vangs shall:

- Be located with the other pole attachments in mind such that it is possible to lay each pole section down flat with no protrusions
- Be located as to be clear of the section overlap
- Not be less than 24 inches apart when the joint is fully telescoped.

3.3.5 The pole top deflection shall not be greater than 10% of the total pole height under full loading conditions with overloads.

3.3.6 Pole tops shall be capped with a steel plate. The steel plate shall be attached by a bolt. There shall be no more than 1/8" of protrusion of the sealer plate beyond the circumference of the pole faces.

3.3.7 Where handling slots/lifting holes are used, they shall be fabricated in accordance with the attached drawing.

3.3.8 Flange bolted poles shall be connected with bolts and nuts. All Thread or anything similar is not an acceptable substitute.

3.3.9 The top piece of each structure shall have two ground clamps consisting of 1/2 inch hex nuts welded over 5/8 inch holes at the same level as the top attachment. The two ground clamps shall be on opposite sides of the pole from each other.

3.3.10 The max splice length shall be indicated by a weld mark.

3.3.11 For structures with post brackets, a ground clamp consisting of a 1/2 inch hex nut welded over a 5/8 inch hole shall be located 6 feet below the bottom post bracket. If the location of this ground clamp conflicts with the splice, the ground clamp shall be moved such that there is no conflict.

3.4 Embedded Structures

3.4.1 Embedded structures shall be designed so that the embedded section is a minimum of ten (10) percent of the overall pole length plus an additional two (2) feet.

3.4.2 Four (4) feet below grade and two (2) feet above grade of the embedded structure shall be coated with an Engineer approved coating that protects the coated section from corrosion for the life of the pole. This shall be the coating practice for all galvanized and self-weathering pole shafts. Please refer to attached drawing. This coating shall be UV resistant. If it is not, another UV resistant coating shall be applied over the top of the corrosion protection. The 6' of corrosion and UV resistant coating is to be included in the price of all direct embedded structures.

3.4.3 The corrosion protection coating shall be Corrocote II Classic PNT 215A and PNT 215B, with a minimum thickness of 16 mils. Another coating capable of protecting the coated section from corrosion for the life of the pole shall be allowed if the Engineer approves its use.

3.4.4 All embedded poles shall have provisions for two (2) bolted ground clamps consisting of 1/2 inch hex-nuts welded over 5/8 inch holes located fifteen (15) inches above and below groundline. Both nuts shall be located on the same pole flat.

3.4.5 Galvanized and Self-Weathering poles shall include a butt plate of at least 1/4 inch thickness. The butt plate on Self-Weathering poles shall completely enclose the shaft base. The butt plate on Galvanized poles shall be detailed to allow adequate drainage during galvanizing.

3.4.8 All embedded poles shall include the ground sleeve shown in the attached drawing.

3.5 Anchor Base Structures

3.5.1 Anchor bolt holes in the base plates shall be of a diameter within the range of 3/8 inch to 1/2 inch larger than the anchor bolts with which they are used.

3.5.2 Anchor bolts shall consist of deformed reinforcing bar in compliance with ASTM Specification A-36 or A-615, weld quality, with the top 12 inches of the bolt threaded according to ANSI-UNC-2A classification. The bolts shall resist the design load of the

structure at the yield point of the bolts. Bolt lengths shall be computed in accordance with of ACI 318, using a 28-day compressive strength of 3000 pounds per square inch. At least 18 inches of threaded ends of the bolts shall be hot dipped galvanized in accordance with ASTM A-123. Each bolt shall be furnished with 2 galvanized hex-nuts whose thread tolerance is such that they will not fail under design loading of the structure.

3.5.3 Anchor bolts shall be preclustered to provide for placement in the foundation as a unit. Unless furnished as part of the cluster assembly, steel anchor bolt setting templates shall be furnished for each base plate configuration except that multiple templates shall be furnished when two (2) or more poles or structures require the same template. Templates shall be permanently identified with a build number and orientation marks aligned on the bisector. Top templates shall have two clearly stamped nameplate (minimum text height of one inch) affixed by weld. The two nameplates shall be on opposite sides of the template.

3.5.4 The bottom piece of each anchor bolted structure shall include a 7 inch x 9 inch inspection hand hole approximately 12 inches above the base plate per the attached drawing. One grounding vang is to be installed 3” to either side of the inspection hand hole per the attached drawing.

3.5.6 All anchor bolt holes shall be equally spaced around the bolt circle. Per ACI 336, clear cover between anchor bolts shall not be less than 4 inches.

3.5.7 Every base plate shall be notched or otherwise marked on the inside bisector.

3.5.8 Anchor bolts shall not have an unsupported length greater than 15 feet. Middle templates shall be added to the cage as necessary.

3.5.9 Anchor bolt drawings shall include a 3D cage rendering.

3.6 Arms and Other Structure Attachments

3.6.1 All pole attachments are shall be designed per the attached drawings.

3.6.2 Arm and post insulator attachments shall be designed by the Fabricator so that the arm or insulator will fail before the failure of the structure or the attachment. All attachments to the poles shall use vang plates or arm brackets. All Davit arm attachments shall be interchangeable. Both static arm attachments shall be interchangeable.

3.6.3 All vangs for the attachment of shield wire, swing angle and dead-end insulators, and guys shall be through vangs welded to both walls of poles. Centers of 1 inch diameter holes in the vangs shall be located on the longitudinal centerline of vangs, and 1 ½ inches from the ends for insulator and guy vangs and 1 ¼ inches from the ends for shield wire vangs. Maximum plate thickness shall not exceed ¾ inch.

3.6.4 All pole shafts shall include provisions for use of removable pole steps unless otherwise noted. Pole steps are a standard Austin Energy inventory item and are not to be furnished with these structures. Pole step attachment shall be Hubbell J600007 detachable step or approved equal. The lowest step attachment shall be located 24 inches above the pole base plate or groundline and the remaining step attachments shall be located on 2 pole faces at 90 degrees to each other except where arc distance between faces exceed 24 inches. Step attachments shall be vertically spaced 30 inches on centers on each face (15 inches between consecutive steps). In addition, working step attachments shall be located on 4 faces of all poles at 4 and 6 feet below each static wire, conductor, and distribution attachment.

3.6.5 All parts bearing the same identification marking shall be interchangeable.

4.0 GENERAL REQUIREMENTS AND INFORMATION

4.1 Design Loading

4.1.1 All structures shall be designed to withstand the loading shown on the attached load tree drawings, without the yielding or failure of any part of the structure. These loads were derived from the National Electric Safety Code (NESC), latest edition, Heavy Loading District and include overload factors.

4.1.2 The Fabricator is responsible for all design and loading calculations for the requirements described herein and in all Attachments. All design calculations and drawings shall be sealed by the Fabricator's registered Professional Engineer.

4.1.3 Preliminary drawings shall include structure configuration, dimensions, weights and stress diagrams, and computer printout of maximum loading and loading conditions.

4.1.4 When requested by Austin Energy, the Fabricator shall include Distribution Arm loads as shown on attached COA-AE Drawings to design poles.

4.2 Design Files

4.2.1 The Fabricator shall submit designs for all contract items including poles and adders (davit arms and cross arms only). All design data shall be in the form of PLS-POLE component files. This will include the following files:

Steel Pole Properties file (.spp)
Tubular Steel Davit Arms properties file (.tdv)
Tubular Steel Cross Arms properties file (.xtm)

4.2.2 Base plates of anchor bolted structures shall be included in the Steel Pole Properties file. No base plate shall fail prior to the shaft when analyzed for ASCE/SEI 48-05 in PLS-POLE or PLS-CADD. If a bend line length override is necessary to comply with that requirement it shall be included in the Steel Pole Properties file.

4.2.3 Any curvature or other variation from a straight davit arm shall be reflected in the Geometry table of the Tubular Steel Davit Arm Properties file.

4.3 Inspections

4.3.1 The Fabricator's inspection personnel performing nondestructive examination (other than visual) shall be qualified in accordance with ASNT Practice No. SNT-TC-1A.

4.4 Deliverables

4.4.1 The Fabricator shall submit the following Deliverables with each Delivery Order:

A. Approval drawings
B. Test reports
C. Final structure drawings (including fabrication drawings)

ATTACHMENT 1

POLE LIST

Pole Type: TANGENT					
Pole Length (ft)	Direct Embed	Embedment Length (ft)	Restricted Groundline Diameter (in)	Anchor Bolt	Restricted Base Diameter (in)
80	✓	10	-	✓	-
85	✓	10.5	-	✓	-
90	✓	11	-	✓	-
95	✓	11.5	-	✓	-
100	✓	12	-	✓	-
105	✓	12.5	-	✓	-
110	✓	13	-	✓	-
120	✓	14	-	✓	-
130	✓	15	-	✓	-
140	✓	16	-	✓	-
150	✓	17	-	✓	-

Pole Type: 5 DEGREE					
Pole Length (ft)	Direct Embed	Embedment Length (ft)	Restricted Groundline Diameter (in)	Anchor Bolt	Restricted Base Diameter (in)
80	✓	10	-	✓	-
85	✓	10.5	-	✓	-
90	✓	11	-	✓	-
95	✓	11.5	-	✓	-
100	✓	12	-	✓	-
105	✓	12.5	-	✓	-
110	✓	13	-	✓	-
120	✓	14	-	✓	-
130	✓	15	-	✓	-
140	✓	16	-	✓	-
150	✓	17	-	✓	-

Pole Type: 10 DEGREE					
Pole Length (ft)	Direct Embed	Embedment Length (ft)	Restricted Groundline Diameter (in)	Anchor Bolt	Restricted Base Diameter (in)
80	✓	10	-	✓	-
85	✓	10.5	-	✓	-
90	✓	11	-	✓	-
95	✓	11.5	-	✓	-
100	✓	12	-	✓	-
105	✓	12.5	-	✓	-
110	✓	13	-	✓	-
120	✓	14	-	✓	-
130	✓	15	-	✓	-
140	✓	16	-	✓	-
150	✓	17	-	✓	-

Pole Type: 20 DEGREE					
Pole Length (ft)	Direct Embed	Embedment Length (ft)	Restricted Groundline Diameter (in)	Anchor Bolt	Restricted Base Diameter (in)
80	×	NA	NA	✓	-
85	×	NA	NA	✓	-
90	×	NA	NA	✓	-
95	×	NA	NA	✓	-
100	×	NA	NA	✓	-
105	×	NA	NA	✓	-
110	×	NA	NA	✓	-
120	×	NA	NA	✓	-
130	×	NA	NA	✓	-
140	×	NA	NA	✓	-
150	×	NA	NA	✓	-

Pole Type: 30 DEGREE					
Pole Length (ft)	Direct Embed	Embedment Length (ft)	Restricted Groundline Diameter (in)	Anchor Bolt	Restricted Base Diameter (in)
80	×	NA	NA	✓	-
85	×	NA	NA	✓	-
90	×	NA	NA	✓	-
95	×	NA	NA	✓	-
100	×	NA	NA	✓	-
105	×	NA	NA	✓	-
110	×	NA	NA	✓	-
120	×	NA	NA	✓	-
130	×	NA	NA	✓	-
140	×	NA	NA	✓	-
150	×	NA	NA	✓	-

Pole Type: 60 DEGREE					
Pole Length (ft)	Direct Embed	Embedment Length (ft)	Restricted Groundline Diameter (in)	Anchor Bolt	Restricted Base Diameter (in)
80	×	NA	NA	✓	-
85	×	NA	NA	✓	-
90	×	NA	NA	✓	-
95	×	NA	NA	✓	-
100	×	NA	NA	✓	-
105	×	NA	NA	✓	-
110	×	NA	NA	✓	-
120	×	NA	NA	✓	-
130	×	NA	NA	✓	-
140	×	NA	NA	✓	-
150	×	NA	NA	✓	-

Pole Type: 90 DEGREE					
Pole Length (ft)	Direct Embed	Embedment Length (ft)	Restricted Groundline Diameter (in)	Anchor Bolt	Restricted Base Diameter (in)
80	×	NA	NA	✓	-
85	×	NA	NA	✓	-
90	×	NA	NA	✓	-
95	×	NA	NA	✓	-
100	×	NA	NA	✓	-
105	×	NA	NA	✓	-
110	×	NA	NA	✓	-
120	×	NA	NA	✓	-
130	×	NA	NA	✓	-
140	×	NA	NA	✓	-
150	×	NA	NA	✓	-
Pole Type: GUYED STUB					
Pole Length (ft)	Direct Embed	Embedment Length (ft)	Restricted Groundline Diameter (in)	Anchor Bolt	Restricted Base Diameter (in)
30	×	NA	NA	✓	-
35	×	NA	NA	✓	-
40	×	NA	NA	✓	-
45	×	NA	NA	✓	-
50	×	NA	NA	✓	-
Pole Type: UNGUYED STUB					
Pole Length (ft)	Direct Embed	Embedment Length (ft)	Restricted Groundline Diameter (in)	Anchor Bolt	Restricted Base Diameter (in)
30	×	NA	NA	✓	-
35	×	NA	NA	✓	-
40	×	NA	NA	✓	-
45	×	NA	NA	✓	-
50	×	NA	NA	✓	-

ATTACHMENT 2

POLE DRAWINGS

NAME PLATE INFORMATION

AUSTIN ENERGY
NAME OF MANUFACTURER DATE OF MANUFACTURER (MM/YY)
HEIGHT (i.e. XXXFT) TYPE (i.e. 30DEG or TAN or LD6)
LINE ANGLE (if applicable)
PROJECT # – TUBE #
INVENTORY ITEM NUMBER (i.e. MAX# 12345)
TUBE WEIGHT (i.e. TUBE XXXLBS)
TOTAL STRUCTURE WEIGHT (i.e. STR XXXLBS)

STEEL PLATE

UNIQUE IDENTIFIER LOCATION

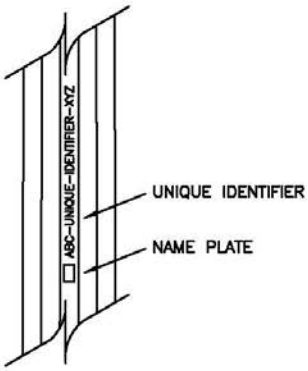

NAME PLATE LOCATION

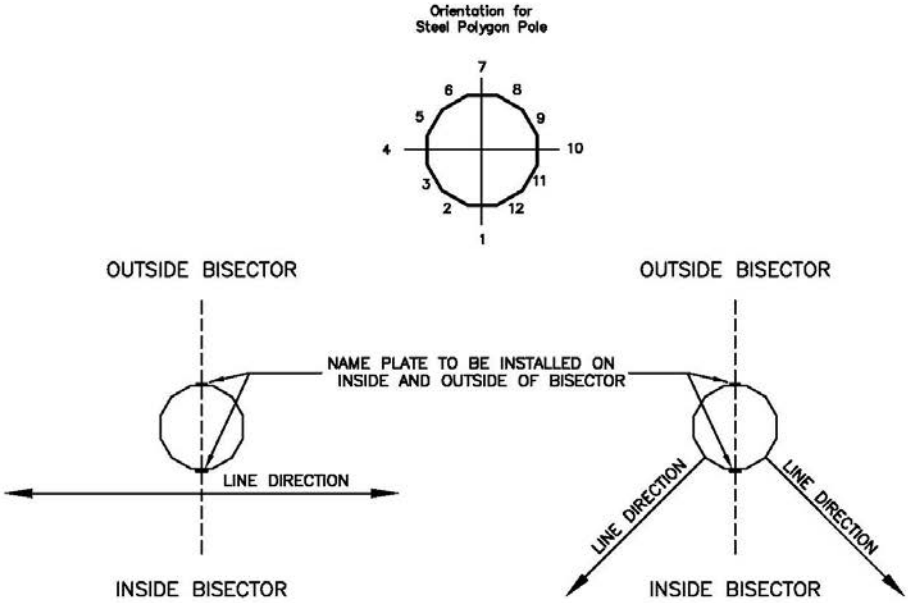

TANGENT – TOP VIEW

DEAD END – TOP VIEW

NOTE:
POLE TO BE ORIENTED SUCH THAT NAME PLATE AND FACES ON WHICH NAME IS INSTALLED IS PERPENDICULAR TO BISECTOR (1 AND 7)

AUSTIN ENERGY POWER DELIVERY	TITLE: NAME PLATE INFORMATION, PLACEMENT & UNIQUE ID	DRAWN: JJG	SCALE: N.T.S.
		CHECKED: TAC	FILENAME: E0758–NMPLT.dwg
		DATE: 5/2/14	DRAWING NO.: E0758–NMPLT

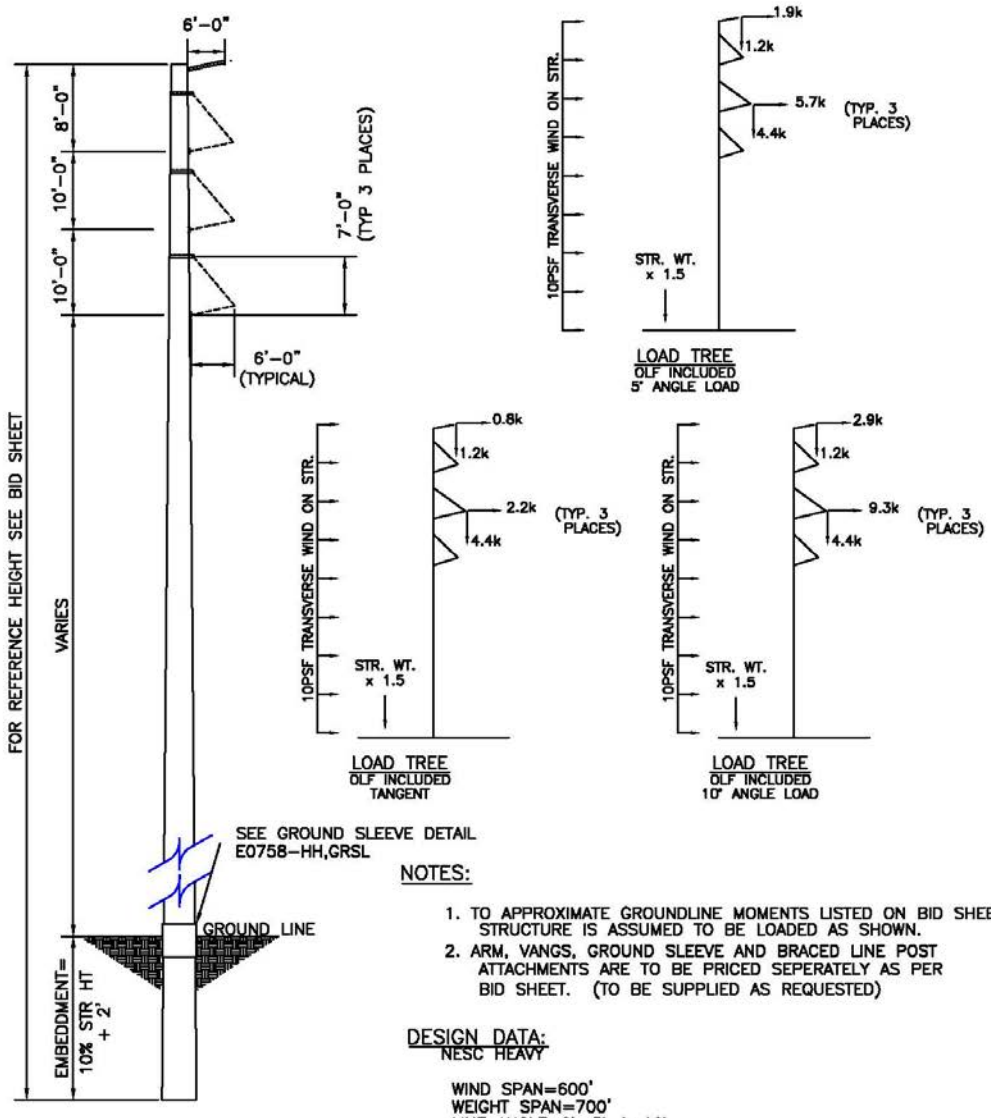

NOTES:

1. TO APPROXIMATE GROUNDLINE MOMENTS LISTED ON BID SHEET STRUCTURE IS ASSUMED TO BE LOADED AS SHOWN.
2. ARM, VANGS, GROUND SLEEVE AND BRACED LINE POST ATTACHMENTS ARE TO BE PRICED SEPERATELY AS PER BID SHEET. (TO BE SUPPLIED AS REQUESTED)

DESIGN DATA:
NESC HEAVY

WIND SPAN=600'
WEIGHT SPAN=700'
LINE ANGLE=0°, 5° & 10°

CONDUCTOR: (2) 795MCM ACSR (26/7) DRAKE PER PHASE
MDT=12480lbs PER CONDUCTOR

OHGW: (1) 0.637" DIA. FIBER OPTIC CABLE
MDT=7000lbs

AUSTIN ENERGY POWER DELIVERY	TITLE: TANGENT & LIGHT ANGLE DIRECT EMBEDDED	DRAWN: JJG	SCALE: N.T.S.
		CHECKED: TAC	FILENAME: E0758-TAN.LA.DE.dwg
		DATE: 9/27/11	DRAWING NO.: E0758-TAN.LA.DE

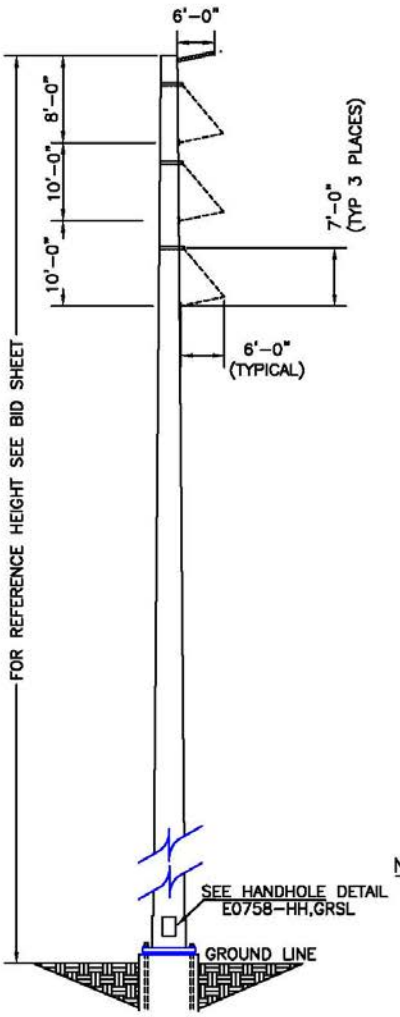

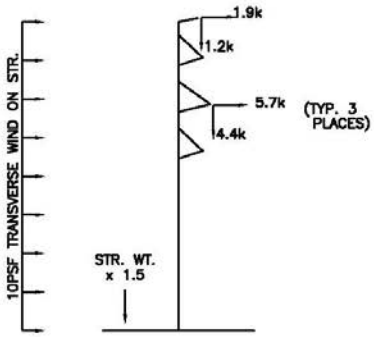

LOAD TREE
OLF INCLUDED
5° ANGLE LOAD

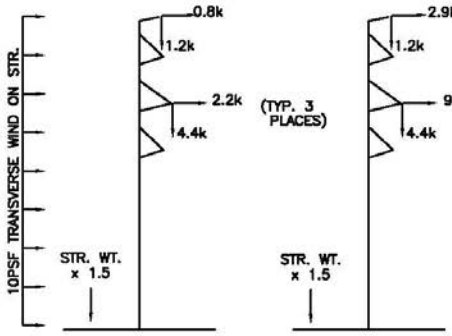

LOAD TREE
OLF INCLUDED
TANGENT

LOAD TREE
OLF INCLUDED
10° ANGLE LOAD

NOTES:

1. TO APPROXIMATE GROUNDLINE MOMENTS LISTED ON BID SHEET, STRUCTURE IS ASSUMED TO BE LOADED AS SHOWN.
2. ARM, VANGS AND BRACED LINE POST ATTACHMENTS ARE TO BE PRICED SEPERATELY AS PER BID SHEET. (TO BE SUPPLIED AS REQUESTED)

DESIGN DATA:
NESC HEAVY

WIND SPAN=600'
WEIGHT SPAN=700'
LINE ANGLE=0°, 5° & 10°

CONDUCTOR: (2) 795MCM ACSR (26/7) DRAKE PER PHASE
MDT=12480lbs PER CONDUCTOR

OHGW: (1) 0.637" DIA. FIBER OPTIC CABLE
MDT=7000lbs

AMERICAN ELECTRIC POWER DELIVERY	TITLE: TANGENT & LIGHT ANGLE ANCHOR BOLTED	DRAWN: JJG	SCALE N.T.S.	
		CHECKED: TAC	FILENAME: E0758-TAN.LA.AB.dwg	
		DATE: 10/18/11	DRAWING NO.: E0758-TAN.LA.AB	

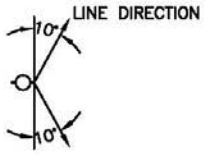

PLAN

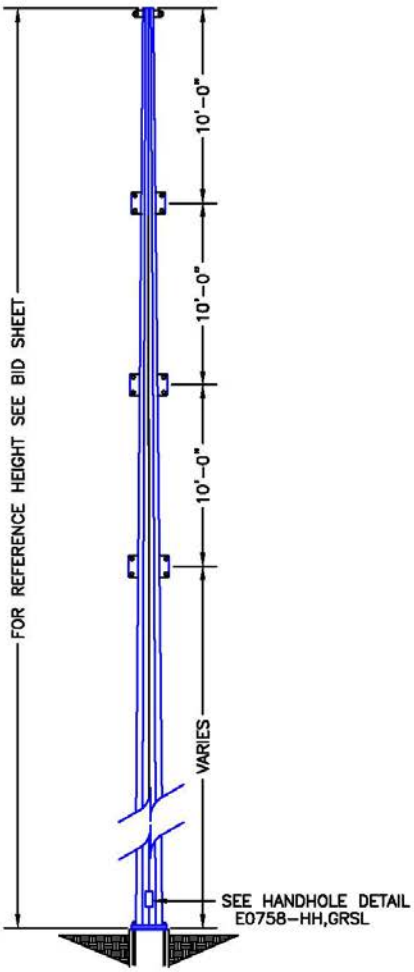

ELEVATION

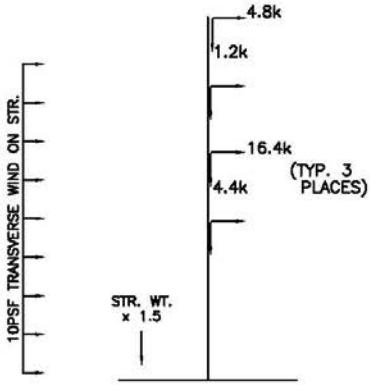

LOAD TREE
OLF INCLUDED

DESIGN DATA:
NESC HEAVY

WIND SPAN=600'
WEIGHT SPAN=700'
LINE ANGLE=20°

CONDUCTOR: (2) 795MCM ACSR (26/7) DRAKE PER PHASE
MDT=12480lbs PER CONDUCTOR

OHGW: (1) 0.637" DIA. FIBER OPTIC CABLE
MDT=7000lbs

NOTE:
VANGS ARE TO BE PRICED SEPERATELY AS PER BID SHEET.
(TO BE SUPPLIED AS REQUESTED)

AUSTIN ENERGY POWER DELIVERY	TITLE: 20° UNGUYED ANGLE ANCHOR BOLTED	DRAWN: JJG	SCALE: N.T.S.
		CHECKED: TAC	FILENAME: E0758-20DEG.dwg
		DATE: 5/31/13	DRAWING NO.: E0758-20DEG

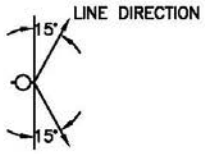

PLAN

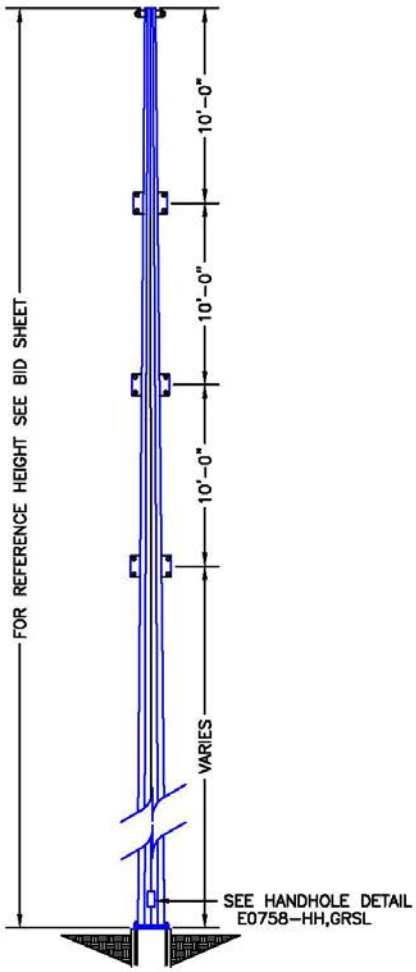

ELEVATION

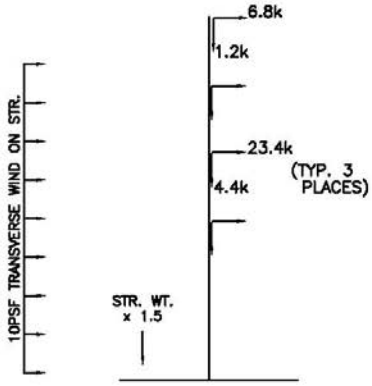

LOAD TREE
OLF INCLUDED

DESIGN DATA:
NESC HEAVY

WIND SPAN=600'
WEIGHT SPAN=700'
LINE ANGLE=30°

CONDUCTOR: (2) 795MCM ACSR (26/7) DRAKE PER PHASE
MDT=12480lbs PER CONDUCTOR

OHGW: (1) 0.637" DIA. FIBER OPTIC CABLE
MDT=7000lbs

NOTE:
VANGS ARE TO BE PRICED SEPERATELY AS PER BID SHEET.
(TO BE SUPPLIED AS REQUESTED)

AMERICAN ELECTRIC POWER POWER DELIVERY	TITLE: 30° UNGUYED ANGLE ANCHOR BOLTED	DRAWN: JJG	SCALE N.T.S.	
		CHECKED: TAC	FILENAME: E0758-30DEG.dwg	
		DATE: 5/31/13	DRAWING NO.: E0758-30DEG	

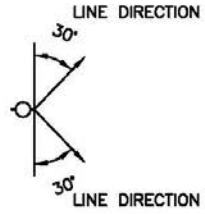

PLAN

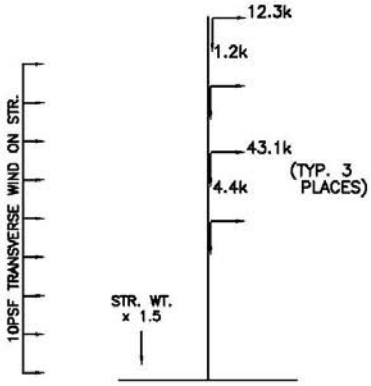

LOAD TREE
OLF INCLUDED

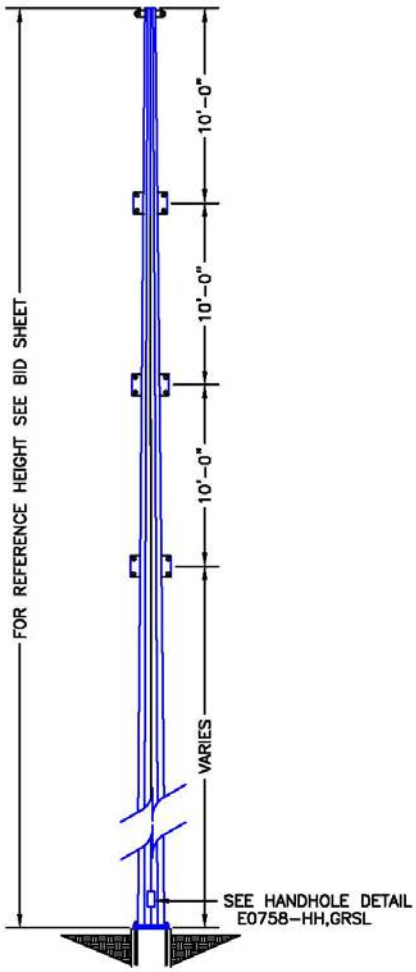

ELEVATION

DESIGN DATA:
NESC HEAVY

WIND SPAN=600'
WEIGHT SPAN=700'
LINE ANGLE=60°

CONDUCTOR: (2) 795MCM ACSR (26/7) DRAKE PER PHASE
MDT=12480lbs PER CONDUCTOR

OHGW: (1) 0.637" DIA. FIBER OPTIC CABLE
MDT=7000lbs

NOTE:
VANGS ARE TO BE PRICED SEPERATELY AS PER BID SHEET.
(TO BE SUPPLIED AS REQUESTED)

AUSTIN ENERGY POWER DELIVERY	TITLE: 60° UNGUYED ANGLE ANCHOR BOLTED	DRAWN: JJG	SCALE: N.T.S.
		CHECKED: TAC	FILENAME: E0758-60DEG.dwg
		DATE: 10/18/11	DRAWING NO.: E0758-60DEG

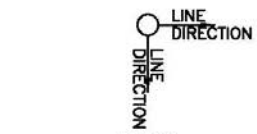

PLAN

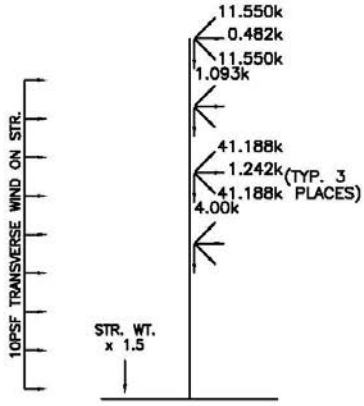

LOAD TREE
OLF INCLUDED

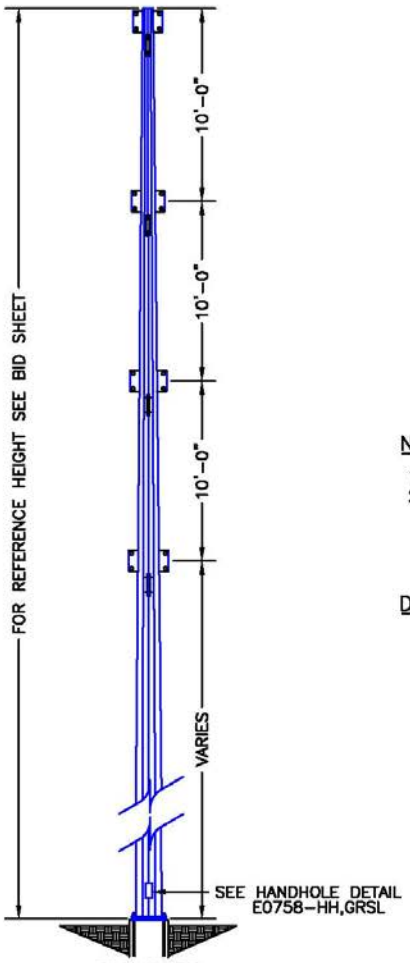

ELEVATION

NOTES:

1. POLE SHAFT SPLICES ARE TO BE BOLTED FLANGE.
2. VANGS ARE TO BE PRICED SEPERATELY AS PER BID SHEET. (TO BE SUPPLIED AS REQUESTED)

DESIGN DATA:

NESC HEAVY

WIND SPAN=500'
WEIGHT SPAN=600'
LINE ANGLE=90°

CONDUCTOR: (2) 795MCM ACSR (26/7) DRAKE PER PHASE
MDT=12480lbs PER CONDUCTOR

OHGW: (1) 0.637" DIA. FIBER OPTIC CABLE
MDT=7000lbs

AUSTIN ENERGY POWER DELIVERY	TITLE: 90° UNGUYED VDDE ANCHOR BOLTED	DRAWN: JJG	SCALE N.T.S.
		CHECKED: TAC	FILENAME: E0758-90DEG.dwg
		DATE: 10/18/11	DRAWING NO.: E0758-90DEG

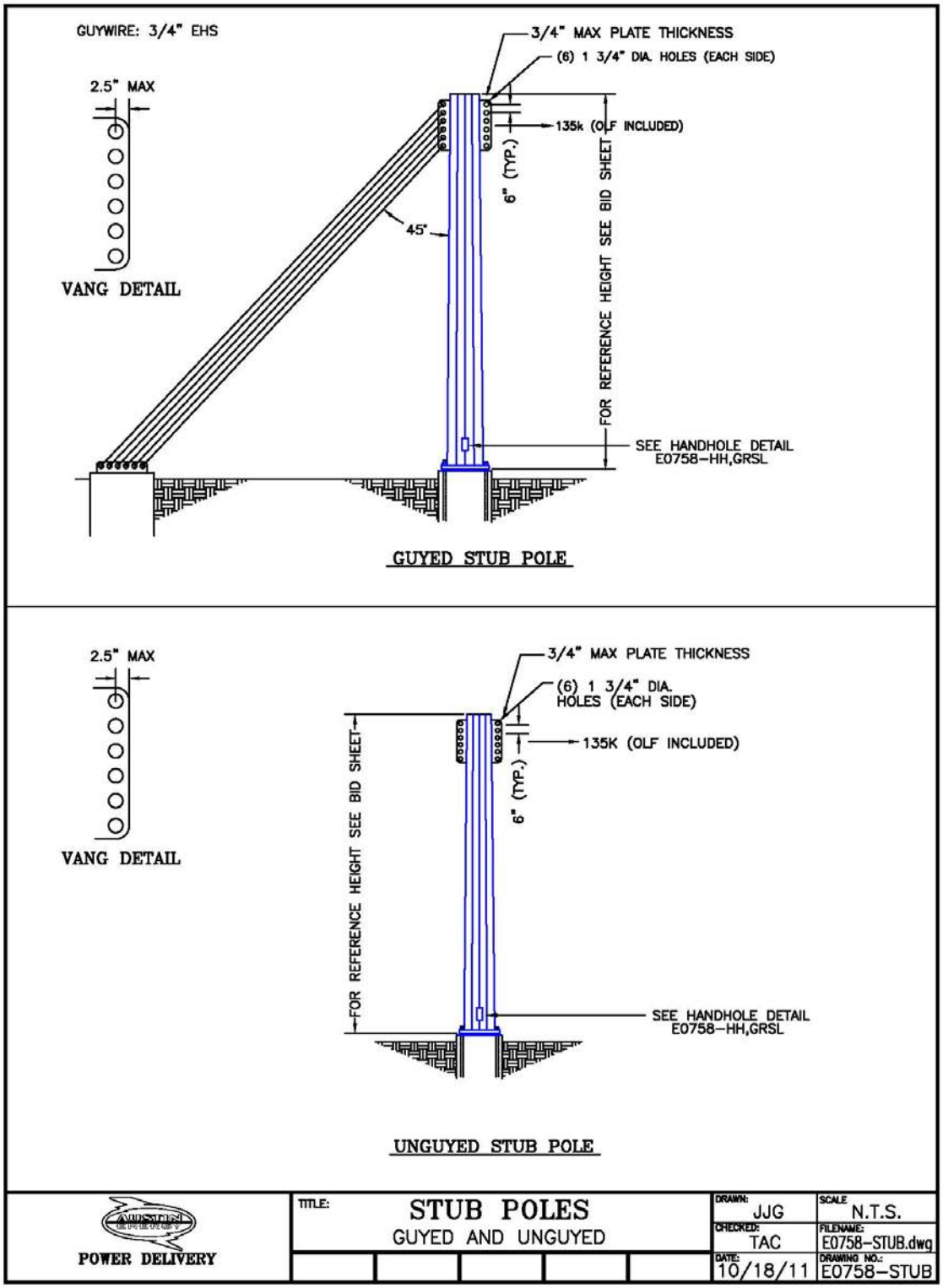
GUYWIRE: 3/4" EHS
2.5" MAX
VANG DETAIL
3/4" MAX PLATE THICKNESS
(6) 1 3/4" DIA. HOLES (EACH SIDE)
135k (OLF INCLUDED)
6" (TYP.)
45°
FOR REFERENCE HEIGHT SEE BID SHEET
SEE HANDHOLE DETAIL
E0758-HH,GRSL
GUYED STUB POLE
2.5" MAX
VANG DETAIL
3/4" MAX PLATE THICKNESS
(6) 1 3/4" DIA.
HOLES (EACH SIDE)
135K (OLF INCLUDED)
6" (TYP.)
FOR REFERENCE HEIGHT SEE BID SHEET
SEE HANDHOLE DETAIL
E0758-HH,GRSL
UNGUYED STUB POLE
POWER DELIVERY
TITLE:
STUB POLES
GUYED AND UNGUYED
DRAWN: JJG
CHECKED: TAC
DATE: 10/18/11
SCALE N.T.S.
FILENAME: E0758-STUB.dwg
DRAWING NO.: E0758-STUB

ATTACHMENT 3

ADDER ITEM LIST

ITEM	LENGTH(S)	REF. DRAWING
Conductor Dead End Thru Vang	NA	E0758-VNGS,PBR
Static DE Thru Vang	NA	E0758-VNGS,PBR
Post Insulator Bracket	NA	E0758-VNGS,PBR
Single Tangent Thru Vang	NA	E0758-VNGS,PBR
Distribution Arm	4.5'	E0758-DIST
Davit Arm	4' & 6'	E0758-4,6DVT
Davit Arm	8' & 10'	E0758-8,10DVT
Davit Arm Dead End, Single Conductor	4', 6', 8' & 10'	E0758-DEDVT
Davit Arm Dead End, Bundled Conductor	4', 6', 8' & 10'	E0758-DEDVT
Static Arm Tangent	6'	E0758-ST,VSARM
Static Arm Dead End	6'	E0758-ST,VSARM
V-String Arm	10'	E0758-ST,VSARM
Drop Bracket	NA	E0758-DB,TX
Tangent Cross Arm	10’	E0758-DB,TX
Dead End Cross Arm	20’, 30’ & 40’	E0758-DEX
Inspection Hand Hole	NA	E0758-HH,GRSL
Ground Sleeve	NA	E0758-HH,GRSL
Step Lug	NA	E0758-STEP
Lifting Holes	NA	E0758-LIFT
Embedded Detail	NA	E0758-EMBDET
Anchor Beam	NA	TH-OA-40

ATTACHMENT 4

ADDER ITEM DRAWINGS

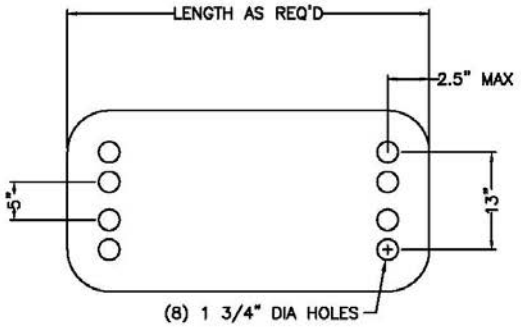

MAXIMUM, 3/4" PLATE THICKNESS

CONDUCTOR DEAD END THRU VANG
DETAIL 1

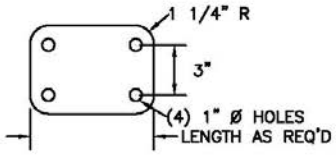

MAXIMUM, 3/4" PLATE THICKNESS

STATIC DE THRU VANG
DETAIL 2

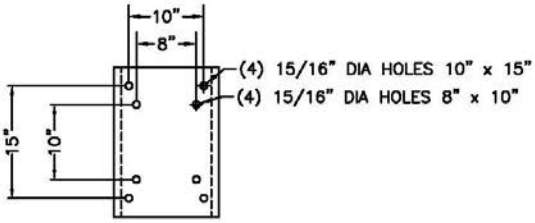

POST INSULATOR BRACKET
DETAIL 3

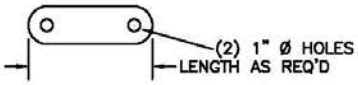

MAXIMUM, 3/4" PLATE THICKNESS

SINGLE TANGENT THRU VANG
DETAIL 4

AUSTIN ENERGY POWER DELIVERY	TITLE: POLE SUPPLY AGREEMENT ADDER DETAILS	DRAWN: JJG	SCALE: NTS
		CHECKED:	FILENAME: E0758-VNGS,PBR.dwg
		DATE: 7/27/11	DRAWING NO.: E0758-VNGS,PBR

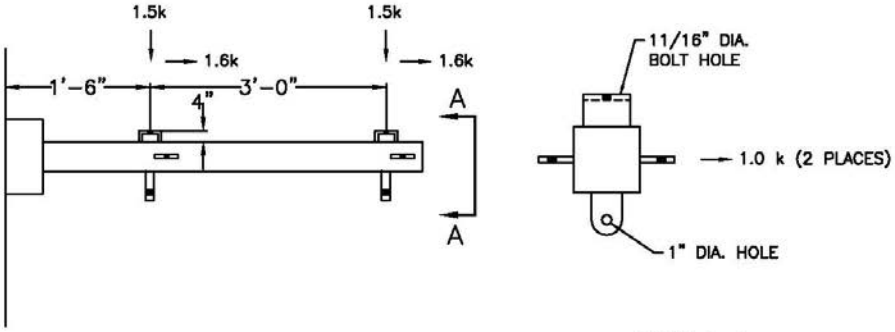

VIEW A-A

DISTRIBUTION ARM
DETAIL 1

DESIGN DATA:

NESC HEAVY

WIND SPAN = 300'
WEIGHT SPAN = 400'
LINE ANGLE = 0° - 10°

PRIMARY: 795 MCM AAC
ARBUTUS
MDT=5500 LBS.

NEUTRAL: 4/0 AAC
OXLIP
MDT=1500 LBS.

AUSTIN ENERGY POWER DELIVERY	TITLE: DISTRIBUTION ARM	DRAWN: JJG	SCALE: NTS
		CHECKED:	FILENAME: E0758-DIST.dwg
		DATE: 7/11/08	DRAWING NO.: E0758-DIST

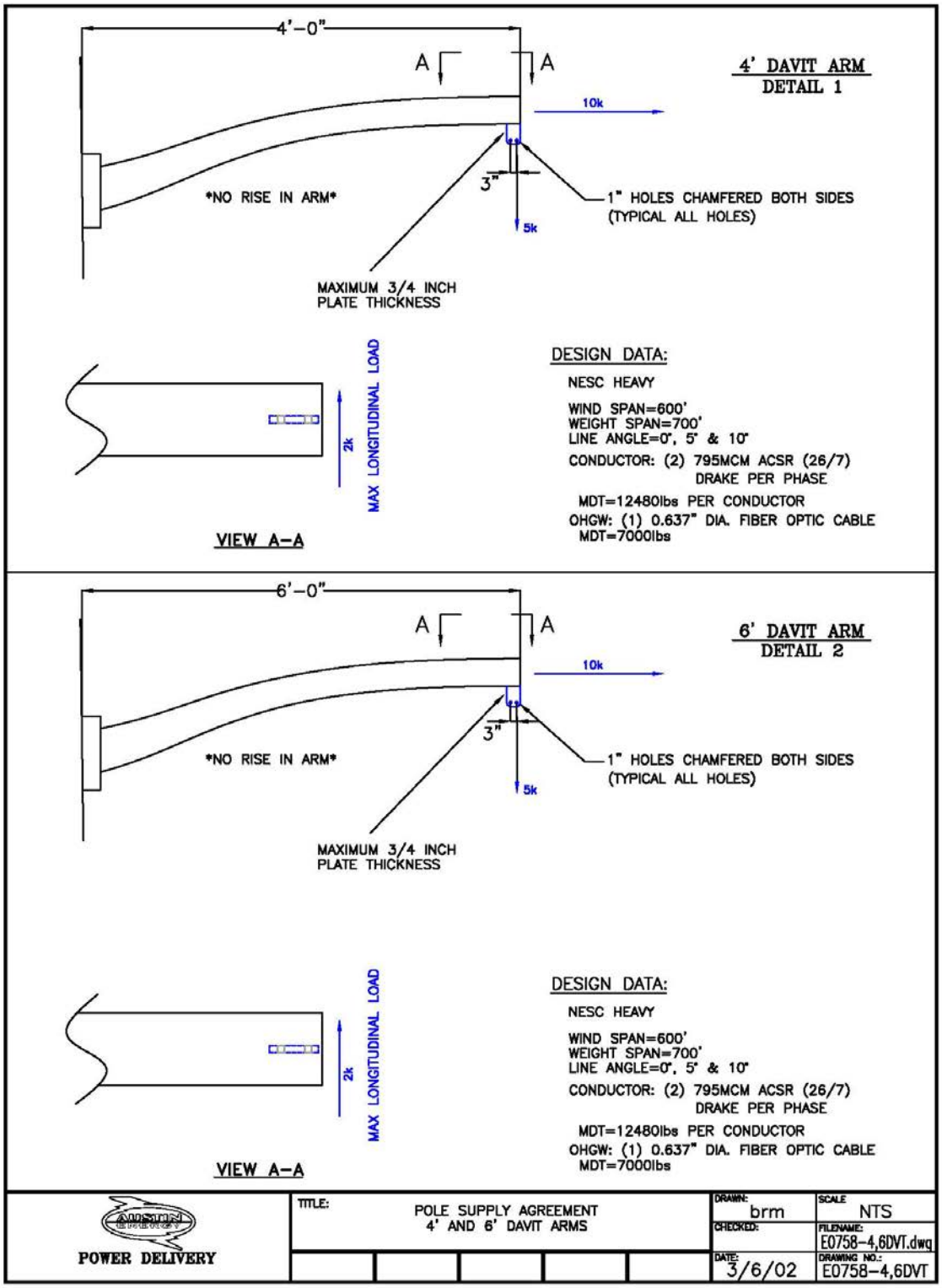
4'-0"
A
A
10k
3"
5k
NO RISE IN ARM
1" HOLES CHAMFERED BOTH SIDES
(TYPICAL ALL HOLES)
MAXIMUM 3/4 INCH
PLATE THICKNESS
4' DAVIT ARM
DETAIL 1
2k
MAX LONGITUDINAL LOAD
VIEW A-A
DESIGN DATA:
NESC HEAVY
WIND SPAN=600'
WEIGHT SPAN=700'
LINE ANGLE=0°, 5° & 10°
CONDUCTOR: (2) 795MCM ACSR (26/7)
DRAKE PER PHASE
MDT=12480lbs PER CONDUCTOR
OHGW: (1) 0.637" DIA. FIBER OPTIC CABLE
MDT=7000lbs
6'-0"
A
A
10k
3"
5k
NO RISE IN ARM
1" HOLES CHAMFERED BOTH SIDES
(TYPICAL ALL HOLES)
MAXIMUM 3/4 INCH
PLATE THICKNESS
6' DAVIT ARM
DETAIL 2
2k
MAX LONGITUDINAL LOAD
VIEW A-A
DESIGN DATA:
NESC HEAVY
WIND SPAN=600'
WEIGHT SPAN=700'
LINE ANGLE=0°, 5° & 10°
CONDUCTOR: (2) 795MCM ACSR (26/7)
DRAKE PER PHASE
MDT=12480lbs PER CONDUCTOR
OHGW: (1) 0.637" DIA. FIBER OPTIC CABLE
MDT=7000lbs
POWER DELIVERY
TITLE:
POLE SUPPLY AGREEMENT
4' AND 6' DAVIT ARMS
DRAWN: brm
CHECKED:
DATE: 3/6/02
SCALE NTS
FILENAME: E0758-4,6DVT.dwg
DRAWING NO.: E0758-4,6DVT

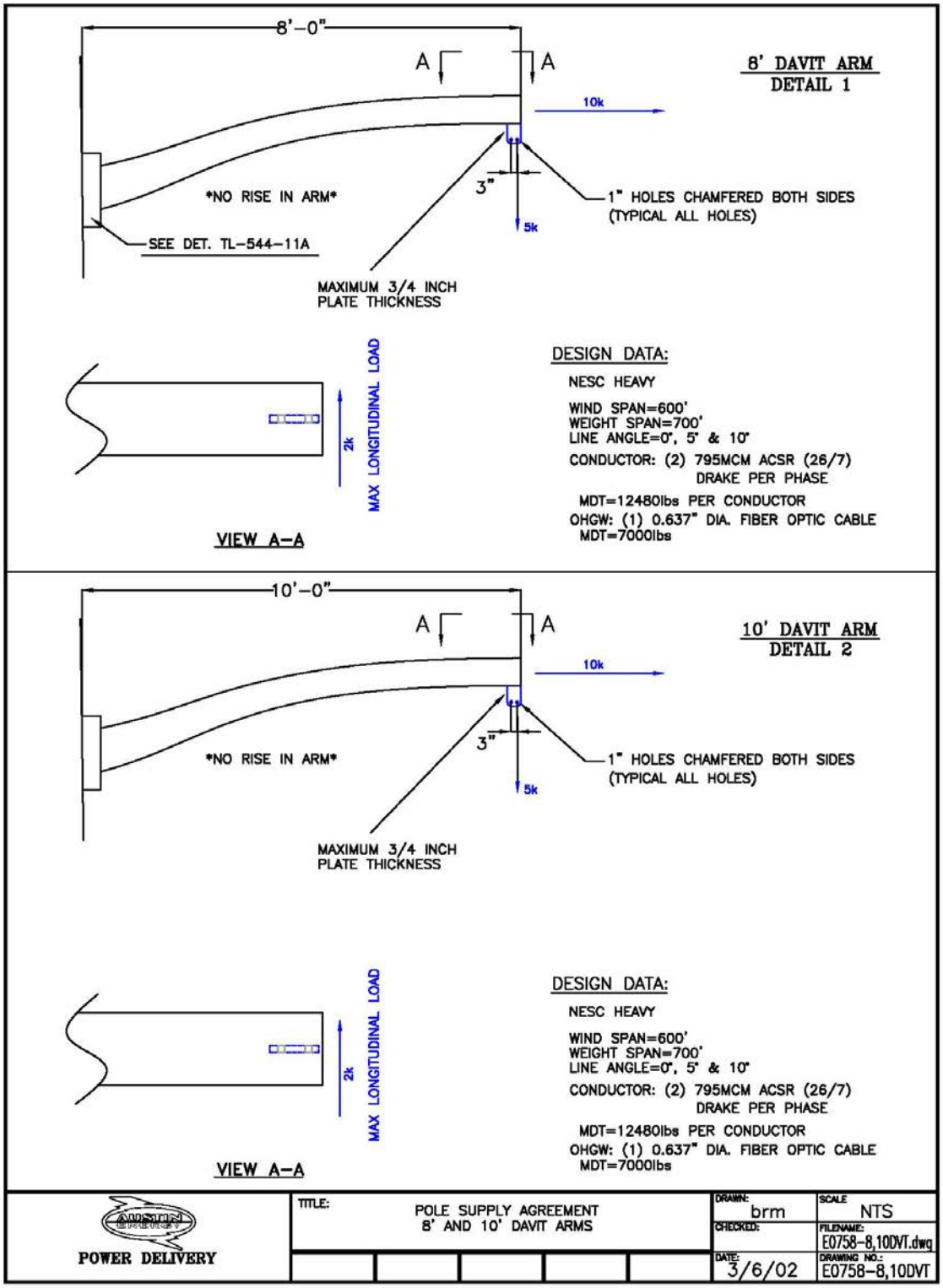
8'-0"
A
A
8' DAVIT ARM
DETAIL 1
10k
3"
5k
NO RISE IN ARM
1" HOLES CHAMFERED BOTH SIDES
(TYPICAL ALL HOLES)
SEE DET. TL-544-11A
MAXIMUM 3/4 INCH
PLATE THICKNESS
2k
MAX LONGITUDINAL LOAD
VIEW A-A
DESIGN DATA:
NESC HEAVY
WIND SPAN=600'
WEIGHT SPAN=700'
LINE ANGLE=0°, 5° & 10°
CONDUCTOR: (2) 795MCM ACSR (26/7)
DRAKE PER PHASE
MDT=12480lbs PER CONDUCTOR
OHGW: (1) 0.637" DIA. FIBER OPTIC CABLE
MDT=7000lbs
10'-0"
A
A
10' DAVIT ARM
DETAIL 2
10k
3"
5k
NO RISE IN ARM
1" HOLES CHAMFERED BOTH SIDES
(TYPICAL ALL HOLES)
MAXIMUM 3/4 INCH
PLATE THICKNESS
2k
MAX LONGITUDINAL LOAD
VIEW A-A
DESIGN DATA:
NESC HEAVY
WIND SPAN=600'
WEIGHT SPAN=700'
LINE ANGLE=0°, 5° & 10°
CONDUCTOR: (2) 795MCM ACSR (26/7)
DRAKE PER PHASE
MDT=12480lbs PER CONDUCTOR
OHGW: (1) 0.637" DIA. FIBER OPTIC CABLE
MDT=7000lbs
POWER DELIVERY
TITLE:
POLE SUPPLY AGREEMENT
8' AND 10' DAVIT ARMS
DRAWN: brm
CHECKED:
DATE: 3/6/02
SCALE NTS
FILENAME: E0758-8,10DVT.dwg
DRAWING NO.: E0758-8,10DVT

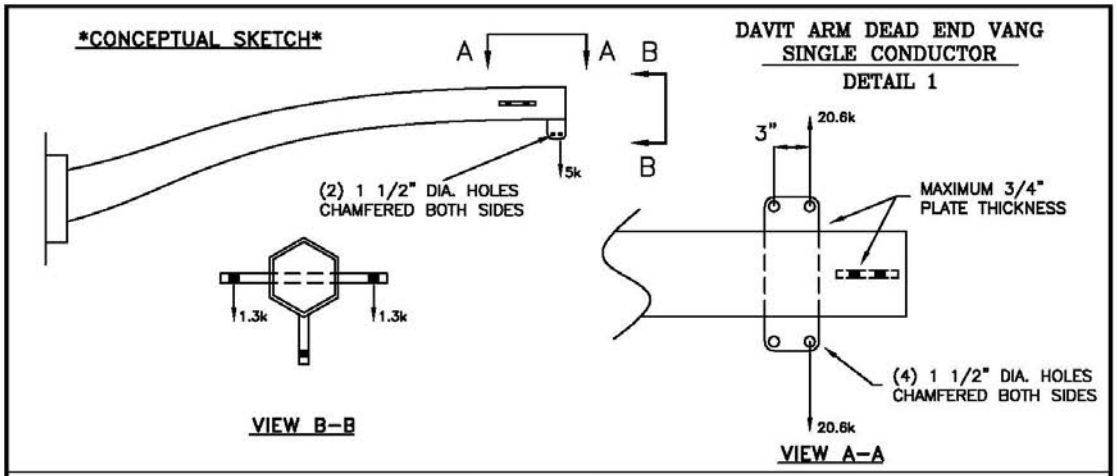

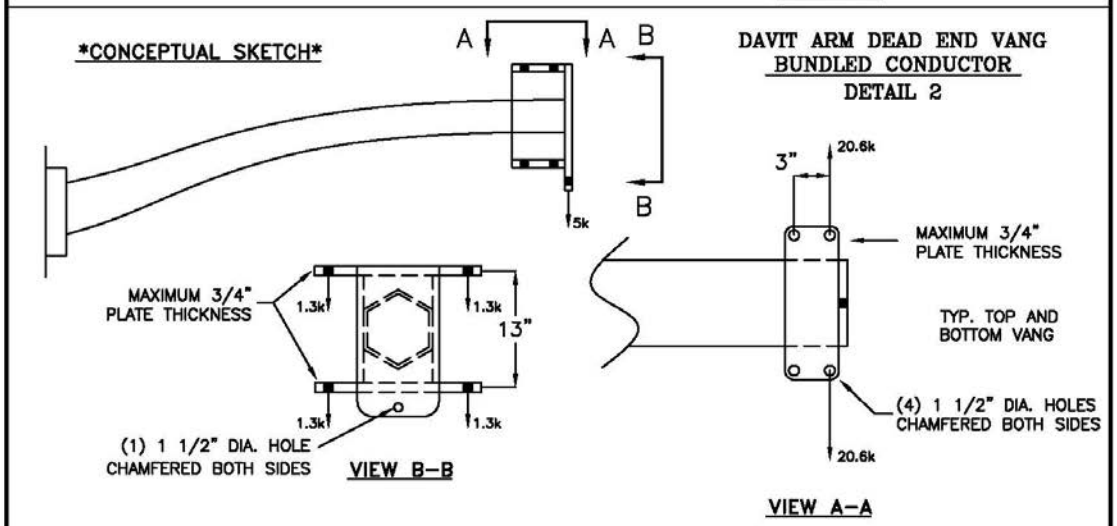

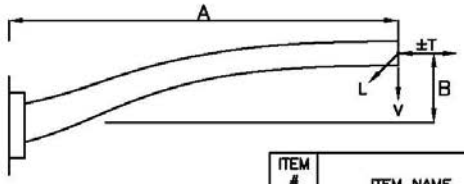

DAVIT ARM DEAD END
LOADING

DESIGN DATA:

NESC HEAVY

WIND SPAN=600'
WEIGHT SPAN=700'

CONDUCTOR: (1) 795MCM ACSR (26/7)
MDT=12480lbs

ASSUMED ADDITIONAL HARDWARE WEIGHT

ITEM #	ITEM NAME	ARM LENGTH (DIM A)	# COND	RISE (DIM B)	LONGITUDINAL (L, KIPS)	TRANSVERSE (T, KIPS)	VERTICAL (V, KIPS)
26	4' DAVIT DE 1 COND	4'	1	0	20.6	1.1	5
27	4' DAVIT DE 2 COND	4'	2	0	41.2	2.2	5
28	6' DAVIT DE 1 COND	6'	1	0	20.6	1.1	5
29	6' DAVIT DE 2 COND	6'	2	0	41.2	2.2	5
30	8' DAVIT DE 1 COND	8'	1	0	20.6	1.1	5
31	8' DAVIT DE 2 COND	8'	2	0	41.2	2.2	5
32	10' DAVIT DE 1 COND	10'	1	0	20.6	1.1	5
33	10' DAVIT DE 2 COND	10'	2	0	41.2	2.2	5

POWER DELIVERY

TITLE: DAVIT ARM DEAD ENDS
DEAD END VANGS AND LOADS

DRAWN: JJG
CHECKED: TAC
DATE: 5/31/13
SCALE: N.T.S.
FILENAME: E0758-DEDVT.dwg
DRAWING NO.: E0758-DEDVT

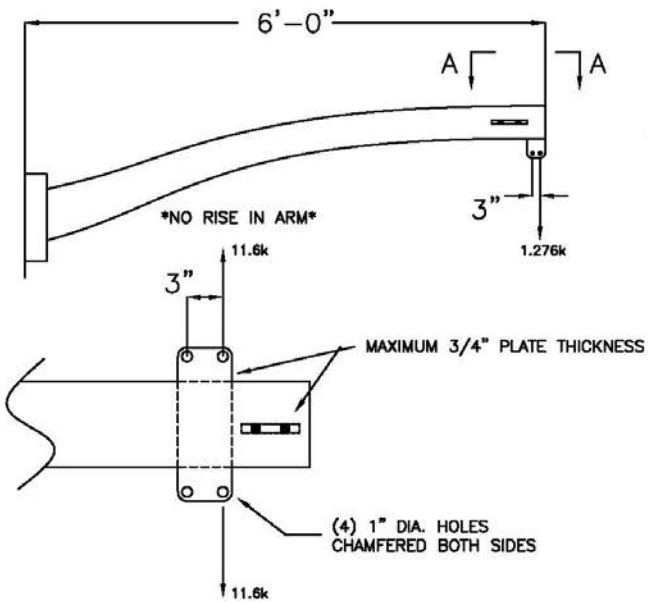

STATIC ARM
DETAIL 1

DESIGN DATA:

NESC HEAVY

WIND SPAN=600'
WEIGHT SPAN=700'
ARM TYPES=TAN & DE

OHGW: (1) 0.637" DIA. FIBER OPTIC CABLE
MDT=7000lbs

MAX LOADS:
TAN – VERTICAL: 1.276k
HORIZONTAL: 2.83k
LONGITUDINAL: 2k
DE – VERTICAL: 1.276k
LONGITUDINAL: 11.6k

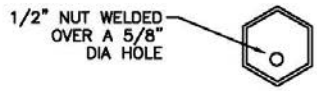

END PLATE

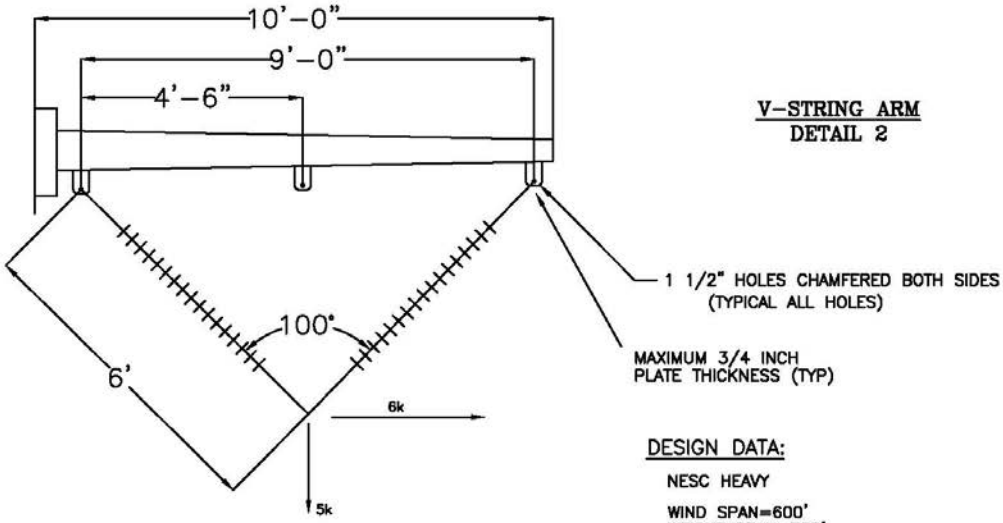

V-STRING ARM
DETAIL 2

DESIGN DATA:

NESC HEAVY

WIND SPAN=600'
WEIGHT SPAN=700'
LINE ANGLE=0°, 5° & 10°

CONDUCTOR: (2) 795MCM ACSR (26/7)
DRAKE PER PHASE

MDT=12480lbs PER CONDUCTOR

OHGW: (1) 0.637" DIA. FIBER OPTIC CABLE
MDT=7000lbs

POWER DELIVERY	TITLE: POLE SUPPLY AGREEMENT STATIC ARM & V-STRING ARM	DRAWN: JJG	SCALE: NTS
		CHECKED:	FILENAME: E0758-ST,VSARM.dwg
		DATE: 7/11/08	DRAWING NO.: E0758-ST,VSARM

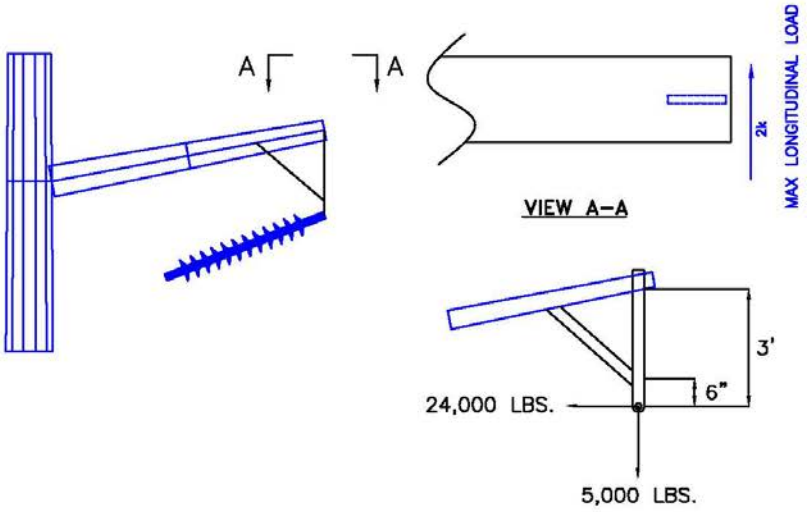

DROP BRACKET DETAIL

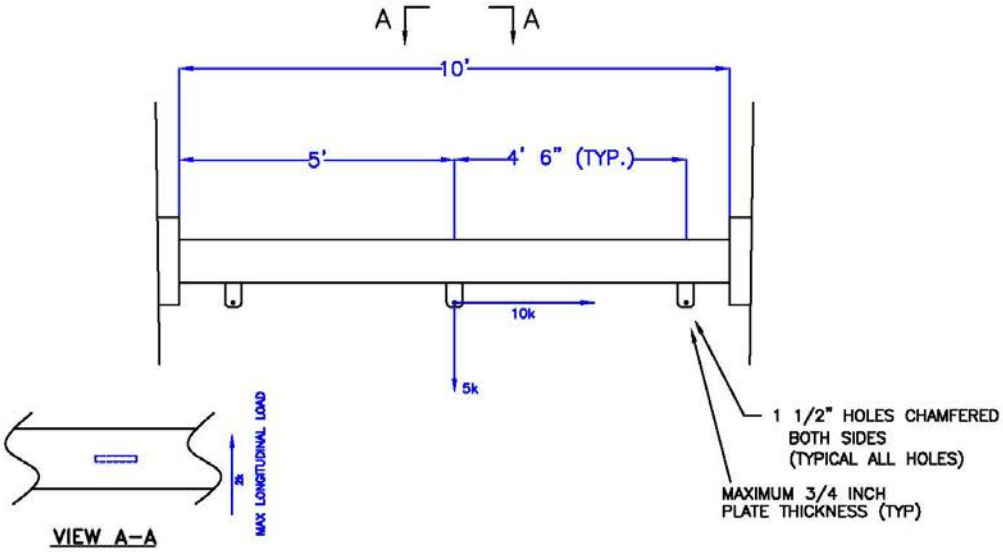

10' TANGENT CROSS ARM DETAIL

AUSTIN ENERGY POWER DELIVERY	TITLE: POLE SUPPLY AGREEMENT DROP BRACKET AND 10' CROSS ARM	DRAWN: JJG	SCALE: NTS
		CHECKED:	FILENAME: E0758–DB,TX.dwg
		DATE: 5/31/31	DRAWING NO.: E0758–DB,TX

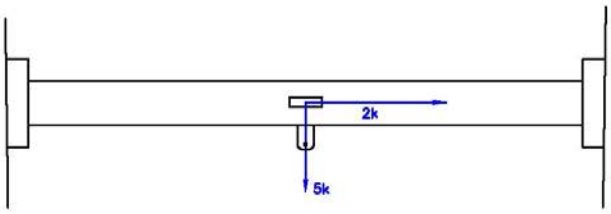

SIDE VIEW

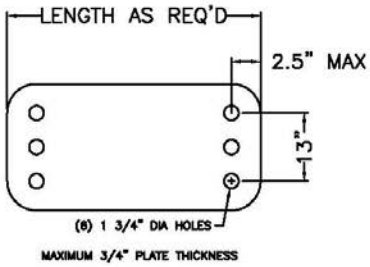

VANG DETAIL

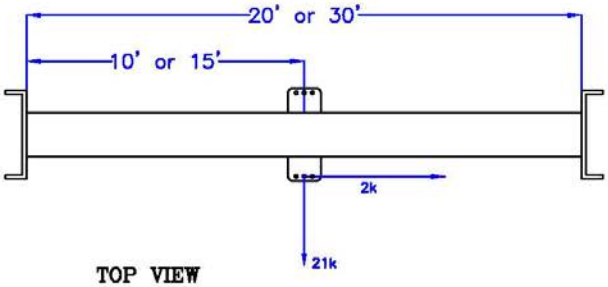

TOP VIEW

20' & 30' DEAD END CROSS ARM DETAIL

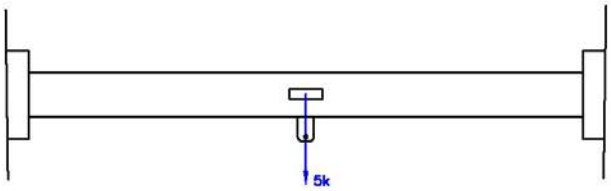

SIDE VIEW

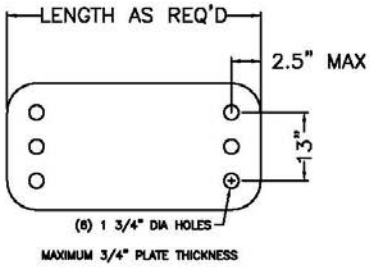

VANG DETAIL

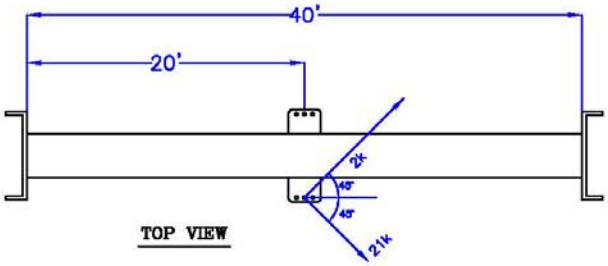

TOP VIEW

40' DEAD END CROSS ARM DETAIL

AUSTIN ENERGY POWER DELIVERY	TITLE: POLE SUPPLY AGREEMENT 20', 30' & 40' CROSS ARMS	DRAWN: JJG	SCALE: NTS
		CHECKED:	FILENAME: E0758-DEX.dwg
		DATE: 5/31/31	DRAWING NO.: E0758-DEX

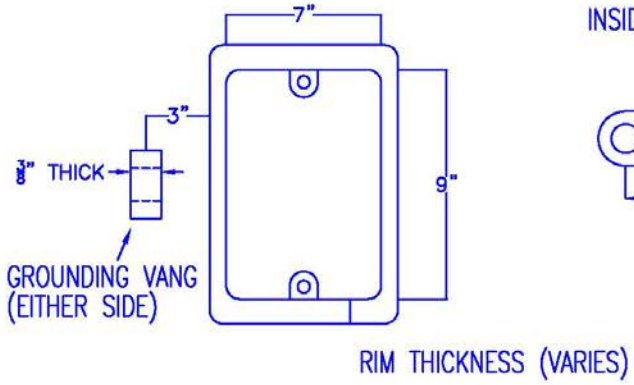

INSPECTION HAND HOLE DETAIL

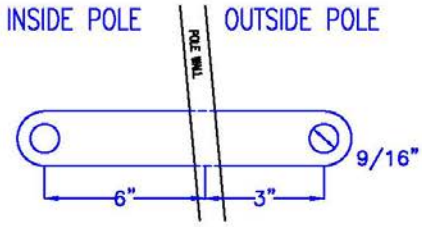

GROUNDING VANG

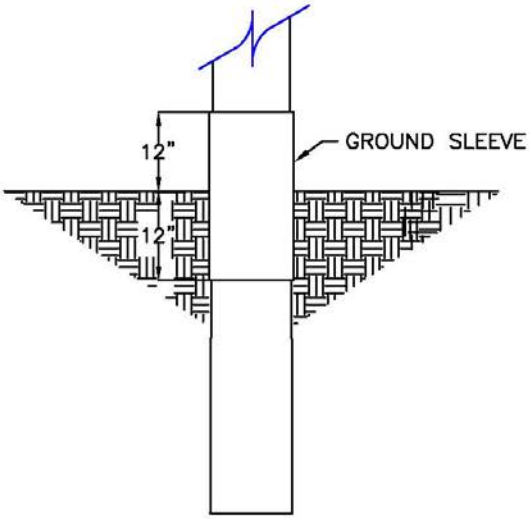

GROUND SLEEVE DETAIL

AUSTIN ENERGY POWER DELIVERY	TITLE: POLE SUPPLY AGREEMENT HAND HOLE AND GROUND SLEEVE DETAILS	DRAWN: JJG	SCALE NTS
		CHECKED:	FILENAME: E0758-HH,GRSL.dwg
		DATE: 5/31/31	DRAWING NO.: E0758-HH,GRSL

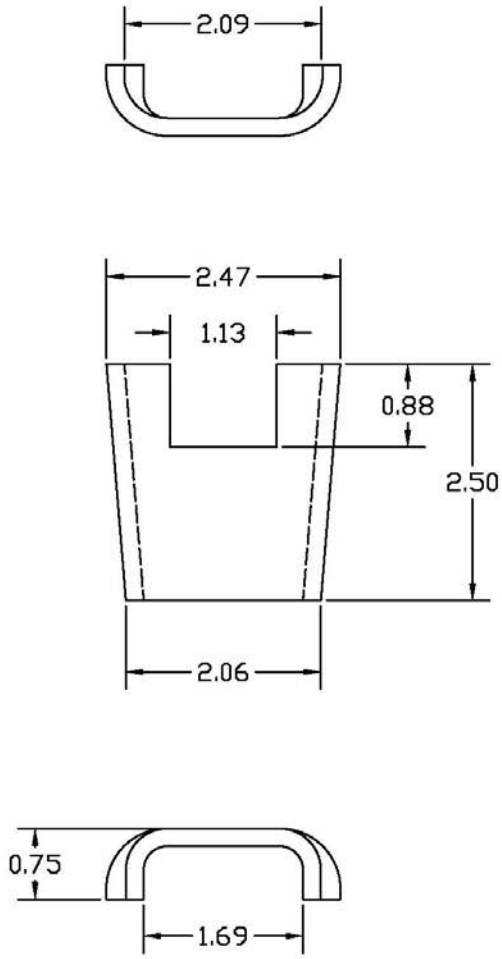

POWER DELIVERY	TITLE: POLE SUPPLY AGREEMENT STEP LUG DETAIL	DRAWN: brm	SCALE: NTS
		CHECKED:	FILENAME: E0758-STEP.dwg
		DATE: 8/28/02	DRAWING NO.: E0758-STEP

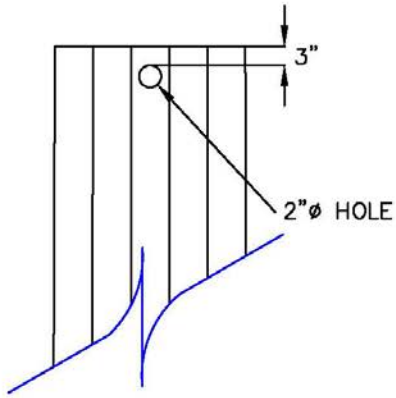

Orientation for
Steel Polygon Pole

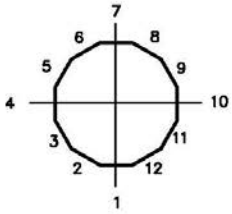

NOTE:
WHERE USED, HANDLING SLOTS/LIFTING HOLES
SHALL BE AS FOLLOWS (ON FACES 1 AND 7):

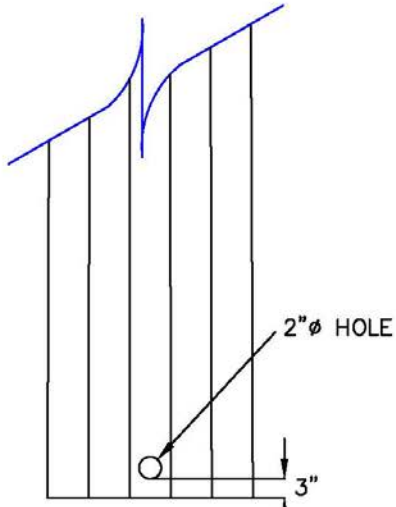

LIFTING HOLE DETAIL

AUSTRIAN ENERGY POWER DELIVERY	TITLE: POLE SUPPLY AGREEMENT LIFTING HOLE DETAIL	DRAWN: JJG	SCALE NTS	
		CHECKED:	FILENAME: E0758-LIFT.dwg	
		DATE: 9/27/11	DRAWING NO.: E0758-LIFT	

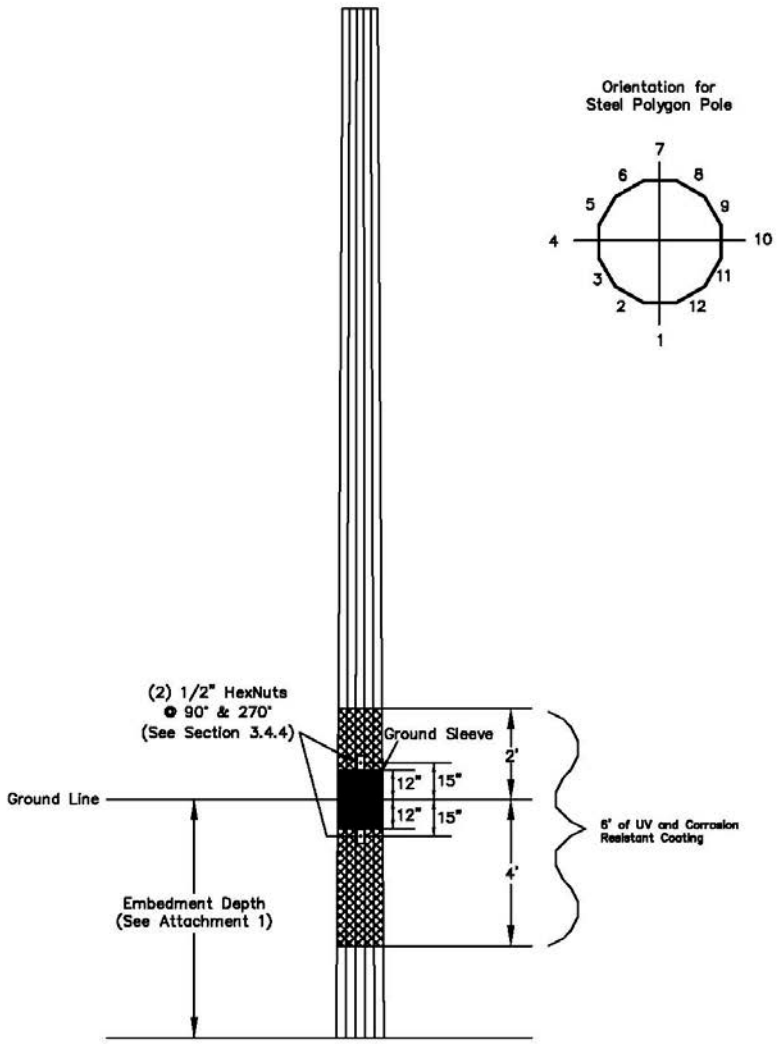

AMERICAN ELECTRIC POWER DELIVERY	TITLE: POLE SUPPLY AGREEMENT EMBEDDED DETAIL	DRAWN: JJG	SCALE NTS
		CHECKED:	FILENAME: E0758-EMBDET.dwg
		DATE: 9/27/11	DRAWING NO.: E0758-EMBDET

BILL OF MATERIALS

ITEM NO.	ITEM REQ.	DESCRIPTION	CSN	EL SPEC.
1	1	ANCHOR BEAM	SPECIAL ORDER	N.S.
2	6	ANCHOR BOLT	SPECIAL ORDER	N.S.

NOTES:

1. #11 DEFORMED REINFORCING BAR GRADE 60 1-1/4" NCS THREAD.
2. 1 NUT AND 1 WASHER SUPPLIED FOR EACH ANCHOR BOLT.
3. NUT, WASHER, & MINIMUM 10" (THREADS) OF BOLT TO BE GALVANIZED AS PER ASTM 123.

SIX ANCHOR BOLTS REQUIRED FOR EACH ANCHOR BEAM

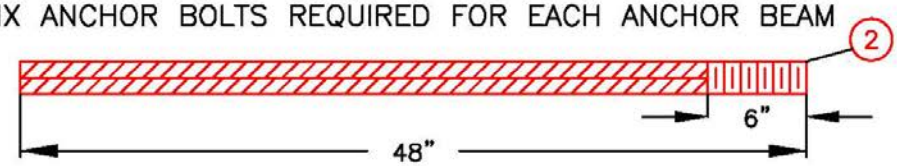

ANCHOR BOLT
N.T.S.

FOR FOUNDATION DETAILS, SEE FOUNDATION SCHEDULE.

TH-0A-40

STEEL SCHEDULE		
STEEL GRADE	DIMENSIONS A	DIMENSIONS B
65	1"	1"

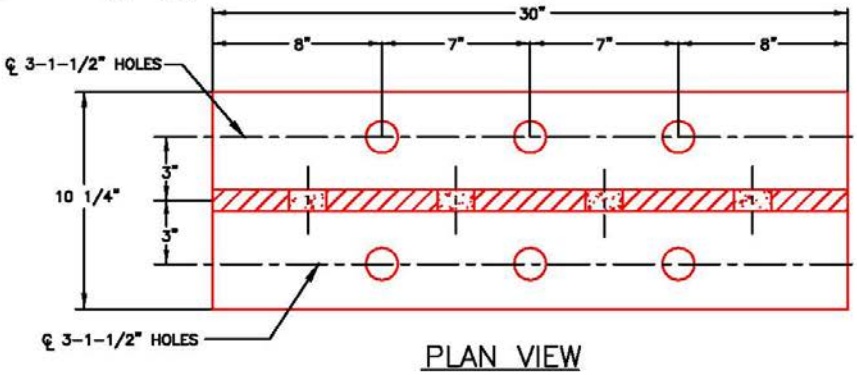

PLAN VIEW

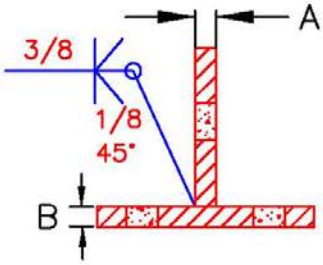

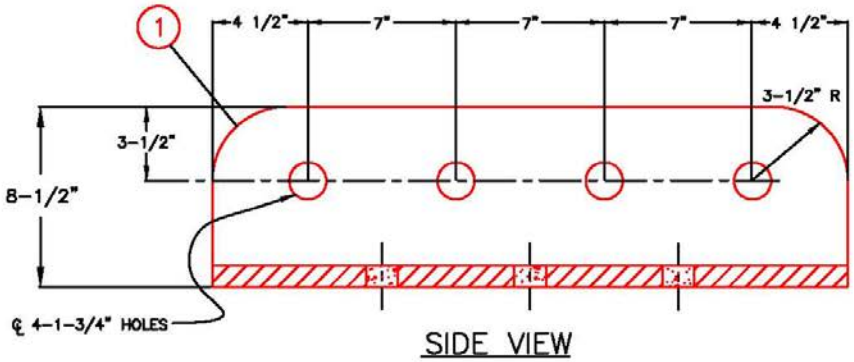

SIDE VIEW

HOT DIP GALV. AFTER FABRICATION.

AUSTIN ENERGY POWER DELIVERY	TITLE: ANCHOR BEAM	DRAWN: MTL	SCALE N.T.S.	
		CHECKED:	FILENAME: TH-0A-40	
		DATE: 9/18/01	DRAWING NO.: TH-0A-40	

Specification E-1114

AUSTIN ENERGY, ELECTRIC UTILITY DEPARTMENT

PURCHASE SPECIFICATION

FOR

DESIGN AND FABRICATION OF

DISTRIBUTION STRUCTURES

DATE	PREPARED BY	ISSUANCE/REVISION	APPROVAL PROCESS SUPV. / MATERIALS SUPV.
7/29/97	Peter G. Soosay, P.E.	Revision	
5/20/02	Mary N. Coleman, P.E.	Revision	
7/15/02	Mary N. Coleman, P.E.	Revision	
2/8/06	Mary N. Coleman, P.E./Mike Gaub	Revision	
8/6/08	J. Gauthier	Revision	
5/14/14	Lee Emmick, P.E.	Revision	

Reason for Revision	Affected Paragraphs
Added Corrosion Protection to full embedment	5.4.3 and Attachment 2 (Coleman)
Added one (1) bolted ground clamp at 10’ from pole top.	5.5.1 and Attachment 2 (Coleman)
Made boltholes a requirement.	5.5.2 and Attachment 4 (Coleman)
Reformatted to new Technical Specification Format	All paragraphs (Gaub)
and to Mirror E-1541	
Add requirements for Pole Weights to Identification Tag	3.3.3.4, 3.5, Attachment 4
and requirements for Pole Steps as requested.	
Add Attachment 4, Bolt Hole Patterns	
Removed Commercial Items and Renumbered (7/15/02)	4.0, 5.0, 6.0 (deleted), 7.0 (deleted)
Format, Language & Re-order	1.0 through 4.3.1
Added deliverables; included header	4.4
(8/6/08)	
Changed Jacking Nuts to Jacking Vangs	
and added weld marks to two piece poles (5/14/14)	3.3.3 and 3.3.4

This specification, until rescinded, shall apply to each future purchase and contract for the commodity described herein.
Retain for future reference.

TABLE OF CONTENTS

1.0 SCOPE AND CLASSIFICATION

1.1 Scope

1.2 Classification

2.0 APPLICABLE STANDARDS

3.0 PHYSICAL REQUIREMENTS

3.1 Material

3.2 Fabrication

3.3 Pole Shafts

3.4 Embedment

3.5 Arms and Other Structure Attachments

4.0 GENERAL REQUIREMENTS AND INFORMATION

4.1 Design Loading

4.2 Design Files

4.3 Inspections

4.4 Deliverables

ATTACHMENT 1 – Distribution Ground Line Moment Design Data

ATTACHMENT 2 – Steel Polygon Pole

ATTACHMENT 3 – Identification Marking

ATTACHMENT 4 – Bolt Hole Patterns

ATTACHMENT 5 – Load Tree and Loading Data

ATTACHMENT 5 – Step Lug Detail

CITY OF AUSTIN ELECTRIC UTILITY DEPARTMENT
PURCHASE SPECIFICATION
FOR
DESIGN AND FABRICATION OF
DISTRIBUTION STRUCTURES

1.0 SCOPE AND CLASSIFICATION

1.1 Scope

1.1.1 This specification sets forth the requirements for design, material, fabrication, finishing and shipping of galvanized and self-weathering steel distribution structures.

1.1.2 This specification is part of a bid package, which contains a description of the items being purchased, quantities, specific structure details, finish requirements, and, when necessary, attachments used to amend this specification.

1.1.3 The City of Austin Electric Utility Department is hereinafter referred to as Austin Energy (AE).

1.1.4 Austin Energy (AE) requires a qualified Supplier to supply distribution structures. The poles shall be made of either galvanized steel or self-weathering steel. The poles shall be symmetrical about the transverse and longitudinal axis, with a gradual and constant taper.

1.1.5 The term “Engineer” refers to the Standards Engineer at 4411-B Meinardus St., Austin TX, 78744.

1.1.6 The term “Fabricator” refers to the party selected to design, fabricate, and furnish the product. Fabricator shall also have the same meaning as Contractor as defined in the Standard Purchase Definitions (Section 0100).

1.2 Classification

1.2.1 Attachments 1, 2, 4 and 5 define the design requirements for distribution structures.

2.0 APPLICABLE STANDARDS

Reference to standard specifications shall be the latest revision of such specifications with abbreviations as listed below:

AISC	-	American Institute of Steel Construction
ANSI	-	American National Standards Institute
ASCE	-	American Society of Civil Engineers
ASME	-	American Society of Mechanical Engineers
ASNT	-	American Society of Non-Destructive Testing

ASTM	-	American Society of Testing and Materials
AWS	-	American Welding Society
NEMA	-	National Electrical Manufacturers Association
NESC	-	National Electrical Safety Code
SSPC	-	Structural Steel Painting Council

3.0 PHYSICAL REQUIREMENTS

3.1 Material

3.1.1 All material used in the structure shall have a minimum yield strength equal to or greater than the value used in the design calculations.

3.1.2 Rolled shapes and plate shall comply with the following ASTM specifications:

Carbon steel	A-36
High strength carbon steel	A-440
High strength low alloy steel	A-242
	A-441
	A-572
	A-36 Modified
Self-Weathering	A-871

3.1.3 Structural Plate material shall be mill-certified to meet an impact of 15 ft-lb. at -20° F in the longitudinal direction using the Charpy V-Notch Impact Test in accordance with ASTM A673. There shall be an average of three (3) tests with no one test below 10ft-lb. The location of the test samples shall be in accordance with ASTM A673.

3.1.4 When required, assembly and step bolts shall be A-394 or A-325. Step bolts shall be installed with self-locking “Ancolock” nuts or equivalent. Bolts and nuts shall have a class 2 tolerance as defined by ANSI B1.1 after galvanizing or self-weathering finish has formed.

3.2 Fabrication

3.2.1 Fabrication shall be in accordance with AISC specifications and shall be equal to the best shop practice of modern steel fabricating shops.

3.2.2 Welding

A. Design of all joints or seams and all welding procedures shall be in accordance with Structural Welding Code AWS D1.1, including the latest addenda. The bidder shall provide welding procedures and processes to be used in the various joints or seams.

B. Welders shall be qualified on all welds used during the fabrication process in accordance with AWS D1.1.

C. Upon request by the Engineer, Fabricator shall provide weld design calculations for arms, baseplates, and other joint details.

3.2.3 Quality and Finish

A. Finish of structures shall be as specified below.

B. Option “A” - Hot-dipped galvanized

1. Steel shall be hot dipped galvanized inside and outside after fabrication. The galvanizing shall be in accordance with ASTM Specification A-123. Precautions shall be taken against hydrogen embrittlement in accordance with ASTM Specification A-143. Double dipping is not allowed. Sections using metalizing shall be noted in bid documents and shall be sealed to prevent internal corrosion.

2. Galvanized structures shall be free and clear of acid drops, tear drop edges, flaking zinc, rough appearance, trapped slag, holes covered with zinc membrane and in general shall be smooth, clean, attractive in appearance and unscarred when received. Pieces having galvanizing which do not meet these requirements, in the sole opinion of the Engineer, shall be rejected.

C. Option “B” - Self-weathering

1. Steel surfaces shall be blast cleaned after fabrication in accordance with the Steel Structures Painting Council’s Surface Preparation Specification SP6, commercial finish, to ensure rapid and uniform weathering.

2. Self-weathering structures shall have an initial formation of patina that is consistent in thickness and appearance. All poles shall have a top and butt end sealer plate welded continuously with a fillet weld. On multiple piece poles, the embedded section shall have a sealer plate continuously fillet welded just inside the top end of the each base section. Pieces, which do not meet these requirements, in the sole opinion of the Engineer, shall be rejected.

D. All punching and drilling shall conform to the following:

1. Bolt holes may be punched, drilled or oxygen cut for tubular steel poles. Bolt holes shall be punched or drilled for lattice towers.

2. The finished diameter of the bolt hole shall be 1/8" larger than the nominal bolt diameter.

3. Finished edges shall be clean cut and free from burrs and chips. Roughness of oxygen-cut surfaces shall not be greater than that defined by AWS D1.1.

4. All holes shall be cylindrical and perpendicular to the principal surface. Slotting of mispunched holes is not permitted.

5. Plugging and welding mispunched holes shall be kept to a minimum. Pieces that, in the opinion of the Engineer, have excessive plugs and welds will be rejected.

6. All holes drilled in the pole wall shall be plugged by an insert capable of remaining in place for the life of the pole.

7. Connections shall be arranged to minimize the eccentricity of loading on the member.

3.2.4 Identification Marking

A. Each piece of structure shall be permanently marked with the same designation as shown on the fabrication drawings. The mark shall be located 12 inches from the point where the two poles have minimum required overlap as outlined in section 3.3.3.

B. Each piece of structure, except the bottom piece, shall have a 3”x5” steel name plate permanently affixed 5 feet above the base. The bottom piece of structure shall have the steel name plate permanently affixed 5 feet above the groundline. The plate shall be stamped according to the format shown in Attachment 3.

C. All identification markings shall be clearly legible after galvanizing or self-weathering finish has formed.

3.2.5 Tolerances

A. The finished work shall conform to the tolerances set forth in these specifications and shall be sufficiently accurate to permit field erection without reaming and with only a moderate amount of drifting. Maximum tolerance allowed on finished work shall conform to the following:

1.	Cutting length	± 1/16"
2.	Center to center distance of end holes on a piece	± 1/16"
3.	Variation of gage lines	± 1/32"
4.	Variation of center to center spacing of a group or cluster of holes	± 1/32"
5.	Compression members shall be straight to a tolerance of 1/1000 of the total length	± 1/32"

6. All material shall be free of deformations, bends, twists, or kinks. Straightening of damaged material shall not be permitted.

B. Fabricator shall size assembly bolts without allowances for washers, unless specifically requested. All bolts shall be of the coarse thread series furnished with self locking “Ancolock” hex nuts or equivalent unless otherwise specified. All bolts shall be of such a length that they pass entirely through the nut and have a minimum projection of two complete threads. Locking of nuts shall be by both mechanical method between the mated threads of the nuts and bolts, and by the application of “Ancolock” or equivalent self-locking nuts to all assembly bolts.

C. A five (5) percent overage of bolts and self-locking nuts shall be included.

3.2.6 Modifications

A. Structures are to be fabricated in accordance with detailed drawings furnished by the Fabricator for approval of the Engineer.

B. For fabrication only orders, minor deviations in member layout to accommodate variations in shop practices will be permitted provided that these deviations do not

materially alter the configuration of the structures and do not reduce the strength of the structures. When such deviations in member layout are made, drawings showing these deviations shall be submitted to the Engineer for approval and the originals of such drawings shall become the property of the Austin Energy upon completion of the order.

3.3 Pole Shafts

3.3.1 Pole shafts used in the structures shall be a minimum of twelve (12) sides and tapered. Taper shall not exceed 0.4 inches per linear foot.

3.3.2 Shaft sections up to 55 feet in length shall be furnished as one piece unless otherwise specified by the Engineer.

3.3.3 When the pole height requires more than one shaft section, each section shall be pre-fitted for a telescoping type of assembly. The upper section at a joint shall telescope over the lower section by not less than 1 1/2 times the distance between flats. Structure sections shall be numbered to relate to the structure identification in the Bid Sheet and at joints both sections shall be clearly marked so that the related faces can be correctly matched in the field assembly. A weld mark shall be made on each section to show that the sections are fully mated.

3.3.4 Four (4) jacking vangs per splice joint shall be welded to opposite walls of the pole shaft in order to accommodate a hydraulic jacking device for field assembly. The jacking vangs shall:

- Be located with the other pole attachments in mind such that it is possible to lay each pole section down flat with no protrusions
- Be located as to be clear of the section overlap
- Not be less than 24 inches apart when the joint is fully telescoped.

3.3.5 The pole top deflection shall not be greater than 10% of the total pole height under full loading conditions with overloads.

3.3.6 Pole tops shall be capped with a steel plate. The steel plate shall be flush with the pole faces. There shall be no protrusions of the sealer plate beyond the circumference of the pole faces.

3.3.7 Poles shall include a butt plate of at least 1/4 inch thickness. The butt plate for self-weathering poles shall completely enclose the shaft base. The butt plate on galvanized poles shall be detailed to allow adequate drainage during galvanizing.

3.4 Embedment

3.4.1 The poles will be embedded to a depth as set forth in Attachment 1.

3.4.2 The embedded portion of the pole shall not exceed 32" in diameter.

3.4.3 Three (3) ft. below grade and two (2) ft. above grade of the embedded structure shall be coated with an Engineer approved coating that protects the coated section from corrosion for the life of the pole. This shall be the coating practice for all galvanized and self-weathering pole shafts. Please refer to Attachment 1 and Attachment 2.

3.4.4 The coating shall be Corrocote II Classic PNT 215A and PNT 215B, with a minimum thickness of 16 mils. Another coating capable of protecting the coated section from corrosion for the life of the pole shall be allowed if the Engineer approves its use.

3.4.5 The coating application shall be performed by a certified applicator.

3.5 Structure Attachments

3.5.1 All poles shaft shall have provisions for four (4) bolted ground clamps consisting of 1/2" steel hex nuts welded over 5/8" holes. These holes shall be placed as set forth in Attachment 2.

3.5.2 Pre-drilling of 11/16 inch and/or 13/16 inch holes will be required. Each AE Purchase Release will indicate quantity and the type of Bolt Hole Pattern to be used as set forth in Attachment 4, otherwise drawings provided by AE will indicate size and location of holes to be drilled prior to shipping of poles.

3.5.3 Each AE order will indicate if provisions for use of removable pole steps will be required. Pole steps are a standard Austin Energy inventory item and are not to be furnished. Pole step attachments shall accommodate the Hubbell J600007 detachable step. The lowest step shall be located 24 inches above the ground line and the remaining step attachments shall be located on two (2) pole faces at 90 degrees to each other. Step attachments shall be vertically spaced 30 inches on centers on each face (15 inches between consecutive steps). In addition, working step attachments shall be located on four (4) faces of all poles at four (4) and at six (6) feet below each conductor and distribution attachment. Step pole attachment shall be in accordance with Attachment 6.

3.5.4 All parts bearing the same identification marking (§ 3.2.4) shall be interchangeable.

4.0 GENERAL REQUIREMENTS AND INFORMATION

4.1 Design Loading

4.1.1 All structures shall be designed to withstand the ground line moments at the embedment depths set forth in Attachment 1, without the yielding or failure of any part of the structure.

4.1.2 The Supplier is responsible for all design and loading calculations for the requirements described herein and in Attachments 1, 2, 4, and 5. All design calculations and drawings shall be sealed by the Fabricator's registered Professional Engineer who is licensed in the state of Texas.

4.1.3 Preliminary drawings shall include structure configuration, dimensions, weights and stress diagrams, and computer printout of maximum loading and loading conditions.

4.1.4 The design details shall also include maximum ground line moments, horizontal shear and vertical loading, uplift or bearing.

4.2 Design Data and Files

4.2.1 The Fabricator shall submit all design data in the form of a PLS-POLE Steel Pole Properties (.spp) file or in a spreadsheet organized as specified by the Engineer.

4.3 Inspections

4.3.1 The Fabricator's inspection personnel performing nondestructive examination (other than visual) shall be qualified in accordance with ASNT Practice No. SNT-TC-1A.

4.4 Deliverables

4.4.1 The Fabricator shall submit the following deliverables with each purchase order:

A. Approval drawings

B. Test reports

C. Final structure drawings (including fabrication drawings)

ATTACHMENT 1

DISTRIBUTION GROUND LINE MOMENT DESIGN DATA

POLE APPLICATION GUIDE

ATTACHMENT 1

Distribution Ground Line Moment Design Data

Pole Application Guide

Steel Pole Application Information			
Epoxy Protective Coating Located between (Ft)	**Pole Length (Ft)**	**Setting Depth (Ft)**	**Pole Ground Line Moment Capacity (Ft-Kips)**
LD-2 or EQUIVALENT			
4.00-9.00	40	7.00	120.00
4.50-9.50	45	7.50	135.00
5.00-10.00	50	8.00	145.00
5.75-10.75	55	8.75	155.00
6.25-11.25	60	9.25	170.00
7.00-12.00	65	10.00	180.00
7.50-12.50	70	10.50	195.00
8.00-13.00	75	11.00	218.00
8.50-13.50	80	11.50	233.00
9.50-14.50	85	12.50	248.00
10.00-15.00	90	13.00	264.00
10.50-15.50	95	13.50	280.00
11.00-16.00	100	14.00	296.00
11.50-16.50	105	14.50	313.00

12.00-17.00	110	15.00	331.00
13.50-18.50	120	16.50	367.00
LD-4 or EQUIVALENT			
4.50-9.50	40	7.50	165.00
5.00-10.00	45	8.00	180.00
5.50-10.50	50	8.50	195.00
6.25-11.25	55	9.25	210.00
6.75-11.75	60	9.75	230.00
7.50-12.50	65	10.50	250.00
8.00-13.00	70	11.00	270.00
8.50-13.50	75	11.50	303.00
9.00-14.00	80	12.00	325.00
10.00-15.00	85	13.00	347.00
10.50-15.50	90	13.50	370.00
11.00-16.00	95	14.00	394.00
11.50-16.50	100	14.50	416.00
12.00-17.00	105	15.00	435.00
12.50-17.50	110	15.50	453.00
14.00-19.00	120	17.00	491.00

ATTACHMENT 1(Continued)

Distribution Ground Line Moment Design Data

Pole Application Guide

Steel Pole Application Information			
Epoxy Protective Coating Located between (Ft)	**Pole Length (Ft)**	**Setting Depth (Ft)**	**Pole Ground Line Moment Capacity (Ft-Kips)**
LD-6 or EQUIVALENT			
5.00-10.00	40	8.00	205.00
5.50-10.50	45	8.50	230.00
6.00-11.00	50	9.00	255.00
6.75-11.75	55	9.75	275.00
7.25-12.25	60	10.25	300.00
8.00-13.00	65	11.00	330.00
8.50-13.50	70	11.50	355.00
9.00-14.00	75	12.00	409.00
9.50-14.50	80	12.50	440.00
10.50-15.50	85	13.50	472.00
11.00-16.00	90	14.00	506.00
11.50-16.50	95	14.50	540.00
12.00-17.00	100	15.00	576.00
12.50-17.50	105	15.50	613.00

13.00-18.00	110	16.00	651.00
14.50-19.50	120	17.50	709.00
LD-8 or EQUIVALENT			
5.50-10.50	40	8.50	255.00
6.00-11.00	45	9.00	285.00
6.50-11.50	50	9.50	315.00
7.25-12.25	55	10.25	345.00
7.75-12.75	60	10.75	380.00
8.50-13.50	65	11.50	415.00
9.00-14.00	70	12.00	455.00
9.50-14.50	75	12.50	528.00
10.00-15.00	80	13.00	571.00
11.00-16.00	85	14.00	615.00
11.50-16.50	90	14.50	661.00
12.00-17.00	95	15.00	708.00
12.50-17.50	100	15.50	757.00
13.00-18.00	105	16.00	808.00
13.50-18.50	110	16.50	860.00
15.00-20.00	120	18.00	970.00

ATTACHMENT 1 (Continued)

Distribution Ground Line Moment Design Data

Pole Application Guide

Steel Pole Application Information			
Epoxy Protective Coating Located between (Ft)	**Pole Length (Ft)**	**Setting Depth (Ft)**	**Pole Ground Line Moment Capacity (Ft-Kips)**
LD-10 or EQUIVALENT			
6.00-11.00	40	9.00	305.00
6.50-11.50	45	9.50	345.00
7.00-12.00	50	10.00	385.00
7.75-12.75	55	10.75	425.00
8.25-13.25	60	11.25	470.00
9.00-14.00	65	12.00	515.00
9.50-14.50	70	12.50	565.00
10.00-15.00	75	13.00	670.00
10.50-15.50	80	13.50	727.00
11.50-16.50	85	14.50	785.00
12.00-17.00	90	15.00	847.00
12.50-17.50	95	15.50	910.00
13.00-18.00	100	16.00	975.00

13.50-18.50	105	16.50	1025.00
14.00-19.00	110	17.00	1076.00
15.50-20.50	120	18.50	1176.00

ATTACHMENT 2

STEEL POLYGON POLE

ATTACHMENT 2
STEEL POLYGON POLE

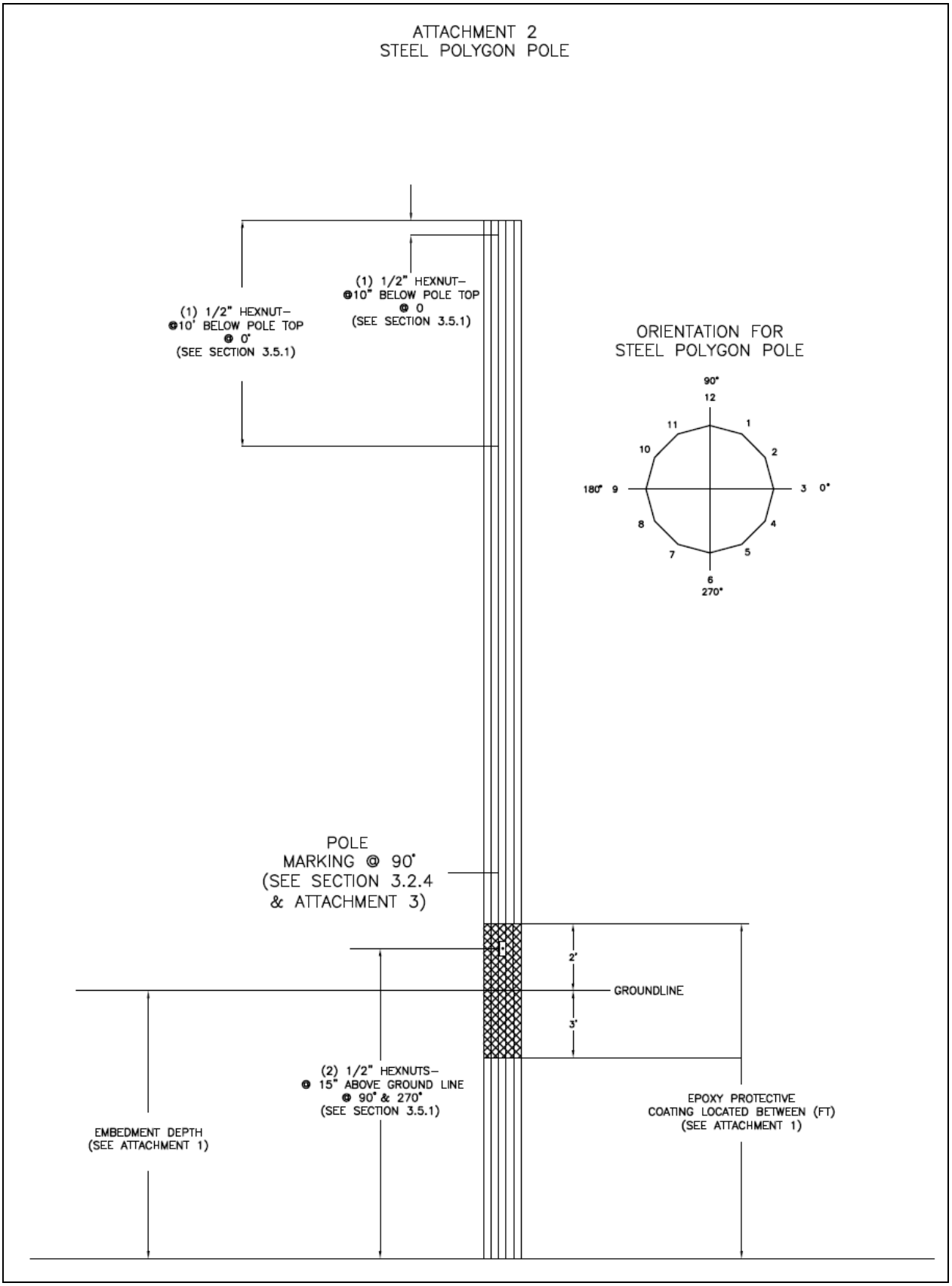

ATTACHMENT 3

Identification Marking

NAME PLATE INFORMATION

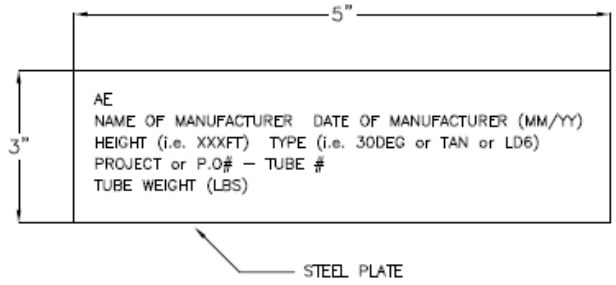

NAME PLATE INFORMATION

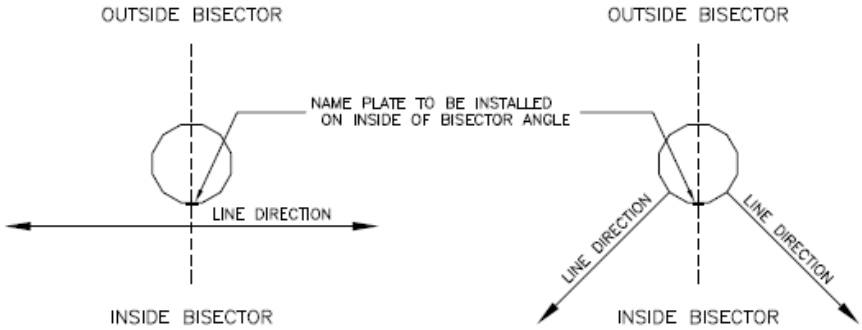

TANGENT – TOP VIEW

DEAD END – TOP VIEW

NOTE:
POLE TO BE ORIENTED SUCH THAT NAME PLATE AND FACE ON WHICH NAME IS INSTALLED IS PERPENDICULAR TO BISECTOR

POWER DELIVERY	TITLE: NAME PLATE INFORMATION AND PLACEMENT	DRAWN: JJG	SCALE: NTS
		CHECKED:	FILENAME: 544–0.dwg
		DATE: 7/11/08	DRAWING NO.: 7D–544–0

ATTACHMENT 4

BOLT HOLE PATTERNS

Attachment 4

Tangent – Bolt Hole Pattern

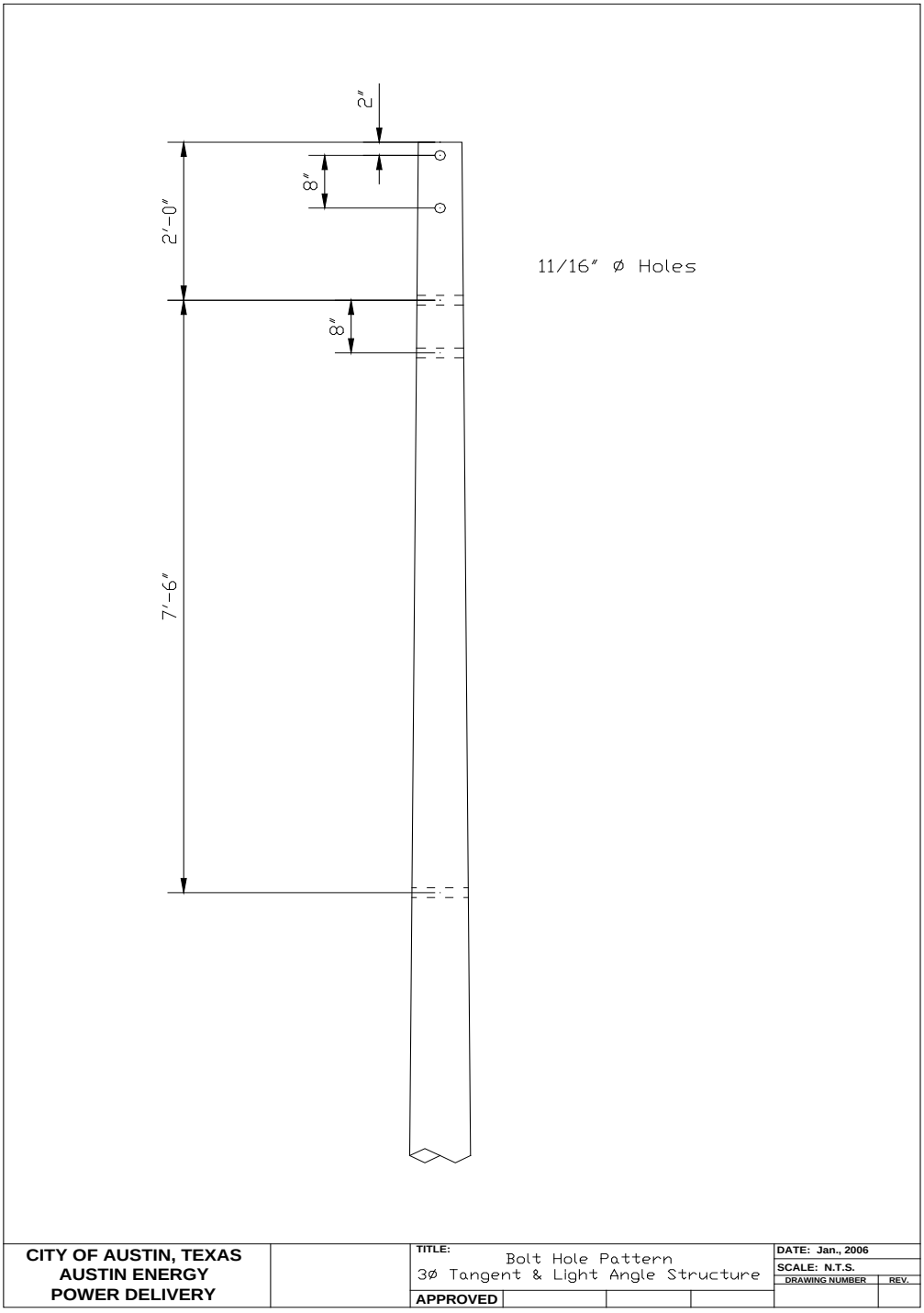

Attachment 4

Flat Dead End – Bolt Hole Pattern

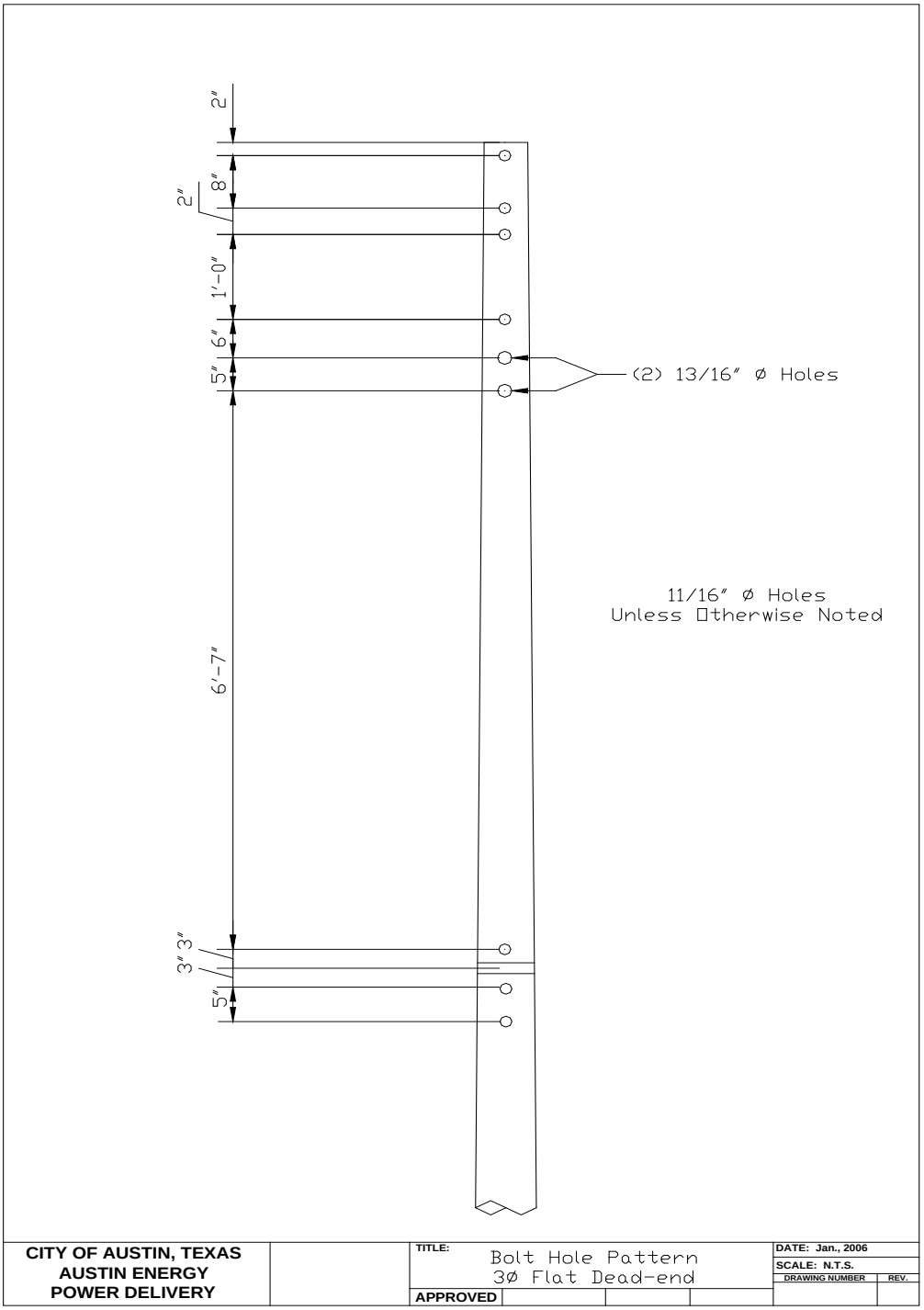

Attachment 4

Delta Dead End – Bolt Hole Pattern

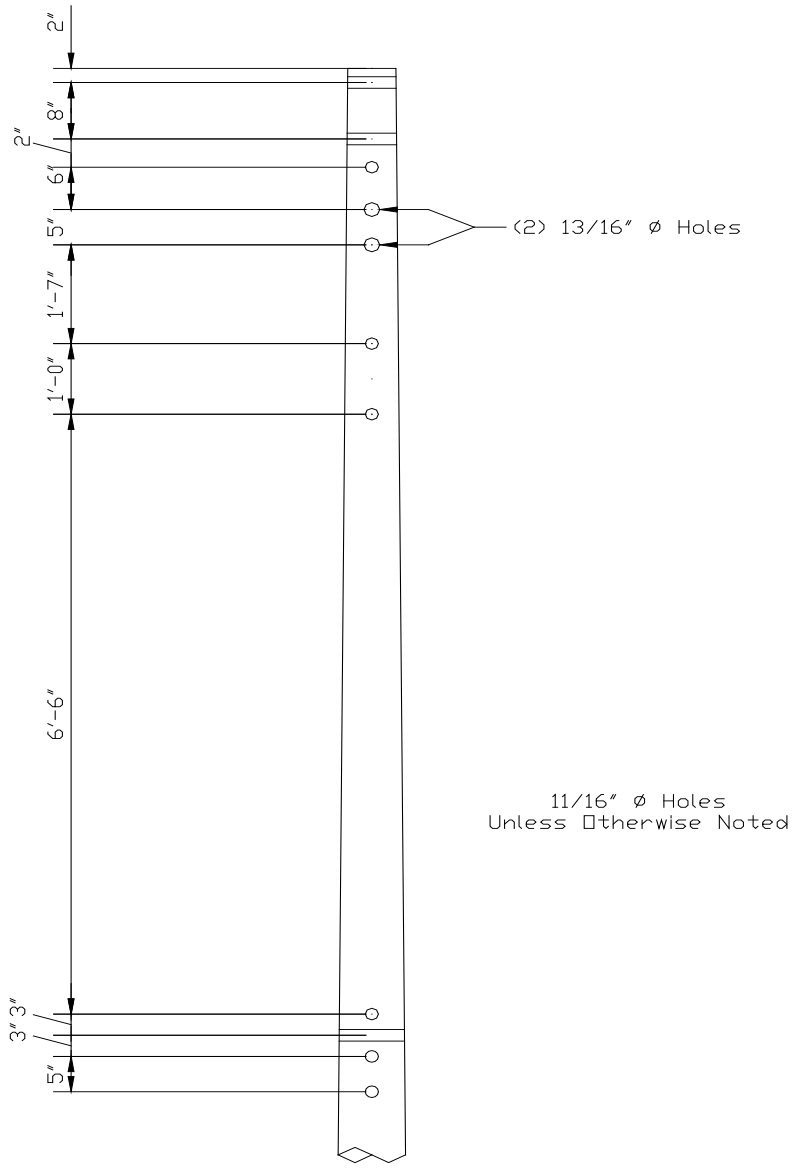

CITY OF AUSTIN, TEXAS AUSTIN ENERGY POWER DELIVERY		TITLE: Bolt Hole Pattern 3ø Delta Dead End APPROVED	DATE: Jan., 2006 SCALE: N.T.S. DRAWING NUMBER / REV.

ATTACHMENT 5

LOAD TREE AND LOADING DATA

ATTACHMENT 5

Loading Data and Load Tree

(Specification E-1114)

1 PRIMARY CONDUCTOR

1.1 Type - 795 kcmil All Aluminum (37 Strand) - Arbutus

1.2 Maximum tension - 4905 Lbs. at NESC Medium Loading District

1.3 Maximum tension - 1922 Lbs. at 60º F. Final Tension

1.4 Wind and Weight Span - 300 Ft

1.5 Conductor Bare Weight - 0.7464 Lbs/Ft

1.6 Conductor Diameter - 1.0260 In.

2 NEUTRAL CONDUCTOR

2.1 Type - 4/0 AWG All Aluminum (7 Strand) - Oxlip

2.2 Maximum tension - 1770 Lbs. at NESC Medium Loading District

2.3 Maximum tension - 512 Lbs. at 60º F. Final Tension

2.4 Wind and Weight Span - 300 Ft

2.5 Conductor Bare Weight - 0.1987 Lbs/Ft

2.6 Conductor Diameter - 0.5220 In.

3 TELEPHONE CABLE

3.1 Type - 300 Pair

3.2 Maximum tension - 2600 Lbs. at NESC Medium Loading District

3.3 Maximum tension - 1000 Lbs. at 60º F. Final Tension

3.4 Wind and Weight Span - 300 Ft

3.5 Conductor Bare Weight - 1.3050 Lbs/Ft

3.6 Conductor Diameter - 2.2650 In.

4 TELEVISION CABLE

4.1 Type - 156 Count Fiber

4.2 Maximum tension - 1000 Lbs. at NESC Medium Loading District

4.3 Maximum tension - 400 Lbs. at 60º F. Final Tension

4.4 Wind and Weight Span - 300 Ft

4.5 Conductor Bare Weight - 0.3020 Lbs/Ft

4.6 Conductor Diameter - 0.8400 In.

5 LOAD TREE

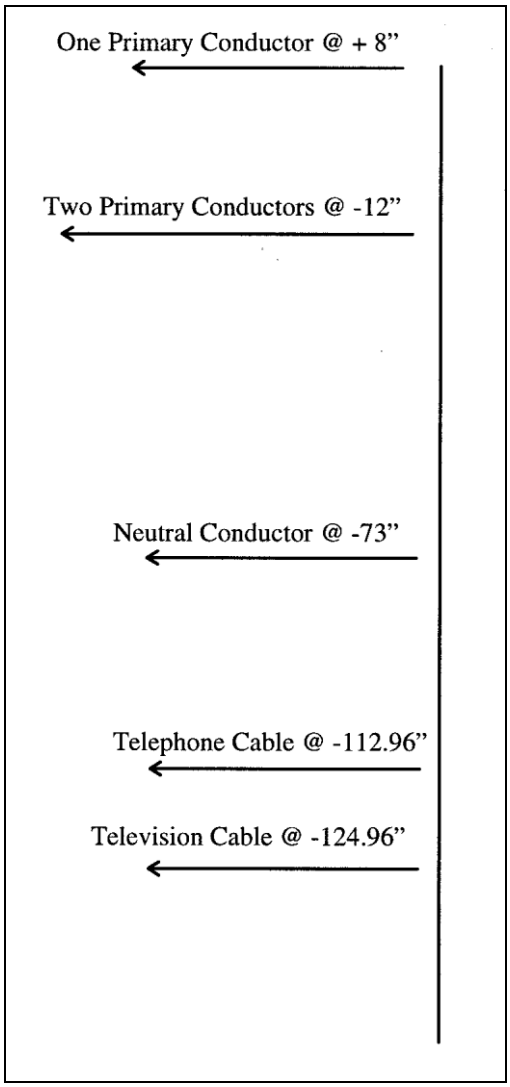
One Primary Conductor @ + 8”
Two Primary Conductors @ -12”
Neutral Conductor @ -73”
Telephone Cable @ -112.96”
Television Cable @ -124.96”

Attachment 6

Step Lug Detail

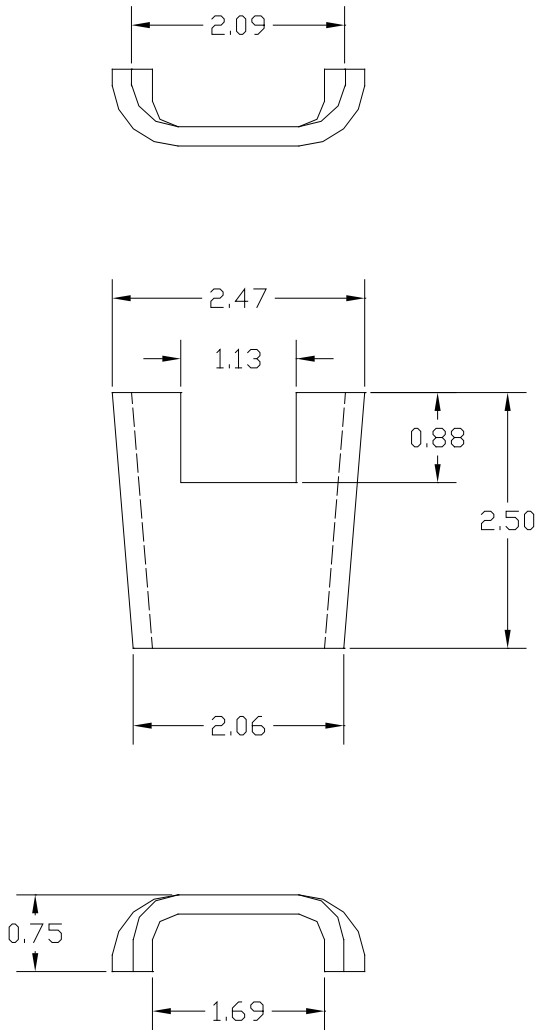

POWER DELIVERY	TITLE: POLE SUPPLY AGREEMENT STEP LUG DETAIL	DRAWN: brm	SCALE: NTS
		CHECKED:	FILENAME: 544-14.dwg
		DATE: 8/28/02	DRAWING NO.: 7D-544-14