CITY OF AUSTIN, TEXAS

Purchasing Office

REQUEST FOR PROPOSAL (RFP)

OFFER SHEET

SOLICITATION NO: RFP 1100 MMH3010

DATE ISSUED: 02/03/2020

REQUISITION NO.: RQM 1100 19120300162

COMMODITY CODE: 72542

FOR CONTRACTUAL AND TECHNICAL ISSUES CONTACT THE FOLLOWING AUTHORIZED CONTACT PERSON:

Primary Contact

Melita Harden
Procurement Specialist III
Phone: (512) 322.61.49
E-Mail: Melita.Harden@AustinTexas.gov

Secondary Contact

Terry Nicholson
Procurement Specialist
Phone : (512) 322-6158
E-Mail : Terry.Nicholson @AustinTexas.gov

COMMODITY/SERVICE DESCRIPTION: Design and Fabrication for Transmission Poles

PRE-PROPOSAL CONFERENCE TIME AND DATE: Thursday, February 13, 2020, 10:00am CST

LOCATION: 721 Barton Springs Road, Room 100, Austin, TX 78704 or Conference Call 512.974.9300 code 748193

PROPOSAL DUE PRIOR TO: Thursday, March 05, 2020, 2:00pm CST

PROPOSAL OPENING TIME AND DATE: Thursday, March 05, 2020, 3:00pm CST

LOCATION: MUNICIPAL BUILDING, 124 W 8th STREET
RM 308, AUSTIN, TEXAS 78701

LIVE SOLICITATION OPENING ONLINE: For RFP's, only the names of respondents will be read aloud

For information on how to attend the Solicitation Closing online, please select this link:

http://www.austintexas.gov/department/bid-opening-webinars

When submitting a sealed Offer and/or Compliance Plan, use the proper address for the type of service desired, as shown below:

Address for US Mail (Only)	Address for FedEx, UPS, Hand Delivery or Courier
City of Austin	City of Austin, Municipal Building
Purchasing Office-Response Enclosed for Solicitation # MMH3010	Purchasing Office-Response Enclosed for Solicitation # MMH3010
P.O. Box 1088	124 W 8th Street, Rm 308
Austin, Texas 78767-8845	Austin, Texas 78701
	Reception Phone: (512) 974-2500

NOTE: Offers must be received and time stamped in the Purchasing Office prior to the Due Date and Time. It is the responsibility of the Offeror to ensure that their Offer arrives at the receptionist's desk in the Purchasing Office prior to the time and date indicated. Arrival at the City's mailroom, mail terminal, or post office box will not constitute the Offer arriving on time. See Section 0200 for additional solicitation instructions.

All Offers (including Compliance Plans) that are not submitted in a sealed envelope or container will not be considered.

SUBMIT 1 ORIGINAL AND 1 ELECTRONIC COPY (USB FLASH DRIVE) OF YOUR RESPONSE

*****SIGNATURE FOR SUBMITTAL REQUIRED ON PAGE 3 OF THIS DOCUMENT*****

This solicitation is comprised of the following required sections. Please ensure to carefully read each section including those incorporated by reference. By signing this document, you are agreeing to all the items contained herein and will be bound to all terms.

SECTION NO.	TITLE	PAGES
0100	STANDARD PURCHASE DEFINITIONS	4
0200 V2	STANDARD SOLICITATION INSTRUCTIONS, UPDATED JUNE 26, 2018	11
0300	STANDARD PURCHASE TERMS AND CONDITIONS	15
0400	SUPPLEMENTAL PURCHASE PROVISIONS	7
0500	SCOPE OF WORK	37
0600	PROPOSAL PREPARATION INSTRUCTIONS & EVALUATION FACTORS	3
0605	LOCAL BUSINESS PRESENCE IDENTIFICATION FORM – Complete and return	2
0700	REFERENCE SHEET – Complete and return if required	2
0705	COST PROPOSAL SHEET	4
0800	NON-DISCRIMINATION AND NON-RETALIATION CERTIFICATION–Complete and return	2
0805	NON-SUSPENSION OR DEBARMENT CERTIFICATION	*
0810 V2	NON-COLLUSION, NON-CONFLICT OF INTEREST, AND ANTI-LOBBYING CERTIFICATION, UPDATED JUNE 26, 2018	*
0835	NONRESIDENT BIDDER PROVISIONS – Complete and return	1
0840	SERVICE-DISABLED VETERAN BUSINESS ENTERPRISE – Complete and return	1
0900	SUBCONTRACTING/SUB-CONSULTING UTILIZATION FORM – Complete & return	1
0905	SUBCONTRACTING/SUB-CONSULTING UTILIZATION PLAN – Complete and return if applicable	3

*** Documents are hereby incorporated into this Solicitation by reference, with the same force and effect as if they were incorporated in full text. The full text versions of the * Sections are available on the Internet at the following online address:**

http://www.austintexas.gov/financeonline/vendor_connection/index.cfm#STANDARDBIDDOCUMENTS

If you do not have access to the Internet, you may obtain a copy of these Sections from the City of Austin Purchasing Office located in the Municipal Building, 124 West 8th Street, Room #308 Austin, Texas 78701; phone (512) 974-2500. Please have the Solicitation number available so that the staff can select the proper documents. These documents can be mailed, expressed mailed, or faxed to you.

The undersigned, by his/her signature, represents that he/she is submitting a binding offer and is authorized to bind the respondent to fully comply with the solicitation document contained herein. The Respondent, by submitting and signing below, acknowledges that he/she has received and read the entire document packet sections defined above including all documents incorporated by reference, and agrees to be bound by the terms therein.

Company Name: _____

Company Address: _____

City, State, Zip: _____

Vendor Registration No. _____

Printed Name of Officer or Authorized Representative: _____

Title: _____

Signature of Officer or Authorized Representative: _____

Date: _____

Email Address: _____

Phone Number: _____

*** Proposal response must be submitted with this signed Offer sheet to be considered for award**

CITY OF AUSTIN
PURCHASING OFFICE
SECTION 0100: STANDARD PURCHASE DEFINITIONS

Whenever a term defined by the Uniform Commercial Code, as enacted by the State of Texas, is used in the Contract, the UCC definition shall control, unless otherwise defined in the Contract.

1. **Addendum** - a written instrument issued by the Contract Awarding Authority that modifies or clarifies the Solicitation prior to the Due Date. "Addenda" is the plural form of the word.

2. **Alternate Offers** - multiple Offers with substantive variations from the same Offeror in response to a Solicitation.

3. **Appropriate**, **Appropriated**, or **Appropriation** - the adoption by the City Council of a budget for a fiscal year that includes payments to be made under the Contract during the respective fiscal year.

4. **Authorized City Representative** - a person designated by the City Manager to act for the Contract Awarding Authority.

5. **Best Offer** - the best evaluated Offer in response to a Request for Proposals or Request for Qualification Statements.

6. **Best Offeror** - the Offeror submitting the Best Offer.

7. **Bid** - a complete, properly signed response to an Invitation for Bid, which if accepted, would bind the Bidder to perform the resultant Contract.

8. **Bidder** - a person, firm, or entity that submits a Bid in response to an Invitation for Bid. Any Bidder may be represented by an agent after submitting evidence demonstrating the agent's authority. The agent cannot certify as to his own agency status.

9. **Bid Guaranty** – a form of security assuring that the bidder (a) will not withdraw the Bid within the period specified for acceptance, and (b) will execute a Contract and furnish required bonds and any necessary insurance within the time specified in the Solicitation, unless a longer time is allowed by the City. The guarantee will be returned to the Bidder upon execution of a Contract.

10. **Bid Sheet** - a document, signed and dated by a Bidder, containing unit and extended bid prices for all goods and/or services, identified by item numbers and descriptions, for which Bids are being submitted

11. **Business Entity** – any entity recognized by law through which business is conducted, including a sole proprietorship, partnership, or corporation.

12. **Central Purchase Order (CT)** - a financial system document issued by the Contract Awarding Authority to encumber funds to pay for the deliverables identified in a Contract.

13. **City** - the City of Austin, a Texas home-rule municipal corporation.

14. **Compliance Plan** - is defined in chapter 2-9 of the City Code.

15. **Construction** - the construction, repair, rehabilitation, alteration, conversion or extension of buildings, parks, utilities, streets or other improvements or alterations to real property.

16. **Contract** - a binding legal agreement between the City and the Offeror. The Contract includes, without limitation, the Solicitation, the Offer submitted in response to the Solicitation, the Contract award, the Standard Purchase Terms and Conditions, Supplemental Terms and Conditions if any, Specifications, and any addenda and amendments thereto. Any inconsistency or conflict in the Contract documents shall be resolved by giving precedence in the following order:

A. any exceptions to the Offer accepted in writing by the City
B. the Supplemental Purchase Terms and Conditions
C. the Standard Purchase Terms and Conditions
D. the Offer, exhibits, and attachments; within the Offer, drawings (figured dimensions shall govern over scaled dimensions) will take precedence over specifications or scope of work.

17. **Contract Awarding Authority** - a City department authorized to enter into Contracts on behalf of the City.

18. **Contractor/Consultant** - a person, firm or entity that supplies or provides goods and/or services to the City by Contract.

19. **Controlling Interest** means: (1) an ownership interest or participating interest in a business entity by virtue of units, percentage, shares, stocks or otherwise that exceeds 10 percent; (2) membership on the board of directors or other governing body of a business entity of which the board or other governing body is composed of not more than 10 members; or (3) service as an officer of a business entity that has four or fewer officers, or service as one of the four officers most highly compensated by a business entity that has more than four officers.

20. **Deliverables** - the goods, products, materials, and/or services to be provided to the City under a Purchase Order, Contract, or Master Agreement.

21. **Delivery Order** - a release against a Master Agreement authorizing delivery of goods and/or performance of services. A financial system document issued by the Department to encumber funds to pay for the deliverables.

22. **Disadvantaged Business Enterprise** - is defined in 49 Code of Federal Regulation Part 26 or other applicable federal regulations.

23. **Due Date** - the date and time specified for receipt of Bids, Proposals, Qualification Statements, Quotations, Responses, Submittals and Compliance Plans.

24. **Goods** - supplies, materials, or equipment.

25. **Highest Responsible Offer** - the highest Offer meeting all requirements of the specifications, terms, and conditions of the Invitation for Bid-Sale or Request for Quotation-Sale.

26. **Highest Responsible Offeror** - the Offeror submitting the “Highest Responsible Offer.”

27. **Interested Party** – a person who has a Controlling Interest in a Business Entity with whom the City contracts or who actively participates in facilitating the Contract or negotiating the terms of the Contract, including a broker, intermediary, adviser, or attorney for the Business Entity.

28. **Invitation for Bid (IFB)** - a Solicitation requesting pricing for a specified Good or Service which has been advertised for Bid in a newspaper and/or on the Internet.

29. **Late Offer** - a Bid, Proposal, Quote, Response, or Submittal that is received after the Due Date and time specified in the Solicitation.

30. **Lowest Responsible Offer** - the Offer meeting all requirements of the specifications, terms, and conditions of the Invitation for Bid or Request for Quotation resulting in the lowest cost to the City in a total cost concept or based solely on price, taking into consideration the financial and practical ability of the Vendor to perform the Contract, past performance of the Vendor, and compliance with all City ordinances concerning the purchasing process.

31. **Lowest Responsible Offeror** - the Offeror submitting the Lowest Responsible Offer.

32. **Master Agreement** - a term contract that is used when the total quantity required cannot be definitely fixed, but can be stated as an estimate or within maximum and minimum limits with deliveries on demand. A Master Agreement does not create a financial obligation.

33. **Minority-Owned Business** - is defined in chapter 2-9 of the City Code.

34. **Non-Professional Services** - services performed that are not of a professional nature such as lawn care, security, janitorial, etc.

35. **Offer** - a complete signed response to a Solicitation including, but not limited to, an Invitation for Bid, a Request for Proposal, a Request for Qualification Statements, or a Request for Quotation.

36. **Offeror** - a person, firm, or entity that submits an Offer in response to a City Solicitation. Any Offeror may be represented by an agent after submitting evidence demonstrating the agent's authority. The agent cannot certify as to his own agency status. Includes Bidders, Proposers, Quoters, Contractors and Consultants.

37. **Pre-Bid / Proposal / Quote / Response / Submittal Conference** - a conference conducted by the Contract Awarding Authority, held in order to allow Offerors and Vendors to ask questions about the proposed Contract and particularly the Contract specifications.

38. **Professional Services** - services that use skills that are predominantly mental or intellectual, rather than physical or manual such as accounting, architecture, land surveying, law, medicine, optometry, professional engineering, etc.

39. **Proposal** - a complete, properly signed response to a Request for Proposals, which if accepted, would bind the Proposer to perform the resultant Contract.

40. **Proposal Guaranty** - a form of security assuring that the Proposer (a) will not withdraw the Proposal within the period specified for acceptance, and (b) will execute a Contract and furnish required bonds and any necessary insurance within the time specified in the Solicitation, unless a longer time is allowed by the City. The guarantee will be returned to the Proposer upon execution of a Contract.

41. **Proposer** - a person, firm or entity that submits a Proposal in response to a Request for Proposals. Any Proposer may be represented by an agent after submitting evidence demonstrating the agent's authority. The agent cannot certify as to his own agency status.

42. **Purchase Order (PO)** - an order placed by a City department for the purchase of Goods and/or Services written on the City's standard Purchase Order form and which, when accepted by the Vendor becomes a Contract. The Purchase Order is the Vendor's authority to deliver and invoice the City for Goods and/or Services specified, and the City's commitment to accept the Goods and/or Services for an agreed upon price.

43. **Purchasing Office** - refers to the Purchasing Office in the Financial and Administrative Services Department of the City.

44. **Quote** - a complete, properly signed response to a Request for Quotation, which if accepted, would bind the Offeror to perform the resultant Contract.

45. **Quoter** - a person, firm or entity that submits a Quote in response to a Request for Quotations. Any Quoter may be represented by an agent after submitting evidence demonstrating the agent's authority. The agent cannot certify as to his own agency status.

46. **Request for Information (RFI)** - a solicitation used to obtain "state of the art" information on goods and/or services for informational purposes only.

47. **Request for Interest (RFINT)** - a solicitation used to identify interest in a City requirement.

48. **Request for Proposal (RFP)** - a solicitation used to acquire goods and/or services when a clearly defined scope of work or specification is not available.

49. **Request for Qualification Statements (RFQS)** - a solicitation used to acquire professional services as defined by the State of Texas Government Code, Chapter 2254.

50. **Request for Quotation (RFQ)** - a solicitation used to acquire goods and/or services with a total dollar value less than the State of Texas competitive bidding amount.

51. **Resident Bidder** - a person, firm, or entity whose principal place of business is in the State of Texas, including a Contractor whose ultimate parent company or majority owner has its principal place of business in the State of Texas.

52. **Response** - a complete signed reply to a Solicitation including, but not limited to a Request for Information and/or a Request for Interest.

53. **Response Guaranty** – a form of security assuring that the Offeror (a) will not withdraw the Offer within the period specified for acceptance, and (b) will execute a Contract and furnish required bonds and any necessary insurance within the time specified in the Solicitation, unless a longer time is allowed by the City. The guarantee will be returned to the Offeror upon execution of a Contract.

54. **Responsible** - refers to the financial and practical ability of the Offeror to perform the Contract and takes into consideration resources, expertise, and past performance of the Offeror as well as compliance with all City ordinances concerning the purchasing process.

55. **Responsive** - meeting all the requirements of a Solicitation.

56. **Services** - include all work or labor performed for the City on an independent Contractor basis other than construction.

57. **Solicitation** - as applicable, includes Invitation for Bid, Invitation for Bid - Sale, Request for Proposal, Request for Qualification Statements, Request for Quotation, Request for Quotation – Sale, Request for Information, Request for Interest, or such other request as defined by the City.

58. **Subcontractor/Subconsultant** - a person, firm, or entity providing goods and/or services to a prime Contractor / Consultant to be used in the performance of the prime Contractor/Consultant's obligations under a Contract.

59. **Sub-Subcontractor/Sub-Subconsultant-** a person, firm or entity providing goods and/or services to a Subcontractor/Subconsultant to be used in the performance of the Subcontractor/Subconsultant's obligations under a Contract.

60. **Unbalanced Offer** - an Offer that is based on prices which are significantly less than cost for some items and significantly more than cost for others.

61. **Vendor** - a person, firm, or entity that sells Goods and/or Services.

62. **Woman-Owned Business** - is defined in chapter 2-9 of the City Code.

CITY OF AUSTIN PURCHASING OFFICE
SECTION 0200: SOLICITATION INSTRUCTIONS V2 JUNE 26, 2018

1. **VENDOR REGISTRATION:** All Vendors, Contractors, Subcontractors, Consultants, and Subconsultants desiring to sell to the City must be registered to do business with the City prior to submitting an Offer to a City solicitation. Prime Contractors/Consultants are responsible for ensuring that their Subcontractors/Subconsultants are registered. Registration can be done through the City's online vendor registration system. Log onto http://www.austintexas.gov/financeonline/vendor_connection/index.cfm and follow the directions.

1. **EQUAL OPPORTUNITY:**

   A. **Equal Employment Opportunity:** No Contractor, or Contractor's agent, shall engage in any discriminatory employment practice as defined in Chapter 5-4 of the City Code. No Offer submitted to the City shall be considered, nor any Purchase Order issued, or any Contract awarded by the City unless the Offeror has executed and filed with the City Purchasing Office a current Non-Discrimination Certification. Non-compliance with Chapter 5-4 of the City Code may result in sanctions, including termination of the contract and the Contractor's suspension or debarment from participation on future City contracts until deemed compliant with Chapter 5-4.

   B. **Americans with Disabilities Act (ADA) Compliance:** No Contractor, or Contractor's agent, shall engage in any discriminatory practice against individuals with disabilities as defined in the ADA, including but not limited to: employment, accessibility to goods and services, reasonable accommodations, and effective communications.

2. **MINORITY AND WOMEN OWNED BUSINESS ENTERPRISE (MBE/WBE) PROCUREMENT PROGRAM:** All City procurements are subject to the City's Minority-Owned and Women-Owned Business Enterprise Procurement Program found at Chapters 2-9A, 2-9B, 2-9C, and 2-9D of the City Code. The Program provides Minority-Owned and Women-Owned Business Enterprises (MBEs/WBEs) full opportunity to participate in all City contracts. Goals for MBE/WBE participation are stated in each Solicitation and differ from contract to contract based on the type of contract, the availability of MBEs/WBEs to perform the functions of the contract, and other factors. Information on achieving the goals or documenting good faith efforts to achieve the goals are contained in the MBE/WBE Program Package contained in Section 0900 of the Solicitation. When goals are established, Offerors are required to complete and return the MBE/WBE Compliance Plan with their Offer. If no goals are established, Offerors are required to submit the No Goals Utilization Plan. If a Compliance Plan or No Goals Utilization Plan is not submitted prior to the date and time set forth in the Solicitation, the Offer will not be accepted for consideration.

3. **SOLICITATION:**

   A. **Review of Documents:** Offerors are expected to examine all documents that make up the Solicitation. Offerors shall promptly notify the City of any omission, ambiguity, inconsistency or error that they may discover upon examination of the Solicitation. Offerors must use a complete Solicitation to prepare Offers. The City assumes no responsibility for any errors or misrepresentations that result from the use of incomplete Solicitations.

   B. **Location of Documents:** Solicitations are issued by the Purchasing Office. The location and phone number for the Purchasing Office are specified in the advertisement and in the Solicitation.

4. **WRITTEN EXPLANATIONS OR CLARIFICATIONS:** Any material information given to one Offeror concerning a Solicitation will be furnished as an Addendum to all Offerors who have been issued a Solicitation. Any explanation, clarification, interpretation or change to the Solicitation made in any other manner is not binding upon the City, and Offerors shall not rely upon such explanation, clarification, interpretation or change. Oral explanations or instructions given before the award of the Contract are not binding. Requests for explanations, clarifications or interpretations may be faxed to the City at (512) 974-2388. The fax must clearly identify the buyer's name and solicitation number.

5. **PRE-BID / PROPOSAL / RESPONSE CONFERENCE:** If a Pre-Bid/Proposal/Response conference is mandatory, the time, place and mandatory nature of the conference will be specified on the cover page of the Solicitation. If a Pre-Bid/Proposal/Response Conference is mandatory and is not attended by an Offeror, their Offer will be rejected.

6. **PREPARATION OF OFFERS:**

   A. **Alternate Offers:** Alternate Offers will be rejected unless the Solicitation authorizes the submission of Alternates.

   B. **Bid Preparation Costs:** All costs associated with preparing a Bid in response to a Solicitation shall be borne by the Bidder.

   C. **Bid / Proposal / Response Guaranty or Bond:** When required by the Solicitation, an Offer must be accompanied by a Bid/Proposal/Response Guaranty or a Bid / Proposal / Response Bond with Power of Attorney attached, issued by a solvent surety authorized under laws of the State of Texas and acceptable to the City.

   D. **Brand Name or Equal:** If the Solicitation indicates brand name or "equal" products are acceptable, the Offeror may propose an "equal" product but must be prepared to demonstrate those features that render it equal. Final determination of a product as an "equal" remains with the City.

   E. **Delivery Time:** Delivery time, if stated as a number of days, will be based on calendar days. Time is of the essence in any City purchase. If the indicated date cannot be met or the date is not indicated, the Offeror shall state its best delivery time.

   F. **Exceptions:** Exceptions that are taken to any portion of the Solicitation may jeopardize acceptance of the Offer.

   G. **Free on Board (FOB) Point:** The Offeror should quote its lowest and best price, with the goods delivered to the place specified, at the Offeror's expense and risk, and there tender delivery to the City.

   H. **Payment:** Payment terms shall be net 30 days.

   I. **Prices:** Offers shall be firm unless otherwise specified. Pricing shall be entered on the Bid/Quote Sheet (if applicable) in ink. Totals shall be entered in the "Total Price" column of the Bid/Quote Sheet. In the event of a discrepancy between unit price and extended price, the unit price shall govern.

   J. **Proposal Preparation Costs:** All costs directly or indirectly related to preparation of a Response to an RFP or any oral presentation required to supplement and/or clarify a Proposal which may be required by the City shall be the sole responsibility of the Proposer.

   K. **Proprietary Information:**

      i. All material submitted to the City becomes public property and is subject to the Texas Public Information Act, Chapter 552, Texas Government Code, upon receipt.
      ii. If an Offeror does not desire proprietary information in the Offer to be disclosed, each page must be identified and marked proprietary at time of submittal. The City will, to the extent allowed by law, endeavor to protect such information from disclosure. The final decision as to what information must be disclosed, however, lies with the Texas Attorney General.
      iii. Failure to identify proprietary information will result in all unmarked sections being deemed nonproprietary and available upon public request.
      iv. For Bids submitted in response to an Invitation for Bids (IFB), the City will not consider any requests to keep the contents of a Bid Sheet Proprietary or Confidential.

L. **Signature:** The Offeror must sign each document in the Solicitation requiring a signature. Any change made to the Offer must be initialed by the Offeror.

M. **Taxes:** Purchases of Goods or Services for City use are usually exempt from City, State, and most Federal Taxes. Offers should not include exempted taxes. The successful Offeror should request a Tax Exemption Certificate from the Purchasing Office. Under no circumstances shall the City be liable to pay exempt taxes under any Contract.

N. **Anti-Lobbying and Procurement:** Article 6, Chapter 2-7, City Code, repealed and replaced effective on June 25, 2018, prohibits lobbying activities or representations by Offerors during the No-Lobbying Period.

1. FINDINGS; PURPOSE.

(A) The council finds that persons who enter a competitive process for a city contract voluntarily agree to abide by the terms of the competitive process, including the provisions of this article.

(B) The council finds that it is in the City's interest:

(i) to provide the most fair, equitable, and competitive process possible for selection among potential vendors in order to acquire the best and most competitive goods and services; and

(ii) to further compliance with State law procurement requirements.

(C) The council intends that:

(i) each response is considered on the same basis as all others; and

(ii) respondents have equal access to information regarding a solicitation, and the same opportunity to present information regarding the solicitation for consideration by the City.

2. APPLICABILITY.

(A) This article applies to all solicitations except:

(i) City social service funding;

(ii) City cultural arts funding;

(iii) federal, state or City block grant funding;

(iv) the sale or rental of real property;

(v) interlocal contracts or agreements; and

(vi) solicitations specifically exempted from this article by council.

(B) Absent an affirmative determination by the council, the purchasing officer has the discretion to apply this article to any other competitive process.

(C) City Code Section 1-1-99 (*Offenses; General Penalty*) does not apply to this article.

3. DEFINITIONS.

In this article:

(A) AGENT means a person authorized by a respondent to act for or in place of the respondent in order to communicate on behalf of that respondent. Each of the following is presumed to be an agent:

(i) a current full-time or part-time employee, owner, director, officer, member, or manager of a respondent;

(ii) a person related within the first degree of consanguinity or affinity to a current full-time or part-time employee, owner, director, officer, member, or manager of a respondent;

(iii) a person related within the first degree of consanguinity or affinity to the respondent, if a respondent is an individual person; and

(iv) a lobbyist, attorney, or other legal representative of the respondent that has been retained by the respondent with respect to the subject matter of either the solicitation or the respondent's response to the solicitation.

(B) AUTHORIZED CONTACT PERSON means a City employee designated in a City solicitation as the point of contact for all purposes for that solicitation.

(C) CITY EMPLOYEE is defined in Section 2-7-2 (*Definitions*), and further includes an independent contractor hired by the City with respect to the solicitation.

(D) CITY OFFICIAL is defined in Section 2-7-2 (*Definitions*).

(E) NO-LOBBYING PERIOD means the period of time beginning at the date and time a solicitation is published and continuing through the earliest of the following:

(i) the date the last contract resulting from the solicitation is signed;

(ii) 60 days following council authorization of the last contract resulting from the solicitation; or

(iii) cancellation of the solicitation by the City

(F) PURCHASING OFFICER means the City employee authorized to carry out the purchasing and procurement functions and authority of the City.

(G) RESPONSE means a written offer or submission in reply to a solicitation.

(H) RESPONDENT means a person or entity that has timely submitted or subsequently timely submits a response to a City solicitation, even if that person subsequently withdraws its response or has been disqualified by the City for any reason. Respondent includes:

(i) a subsidiary or parent of a respondent;

(ii) a joint enterprise, joint venture, or partnership with an interest in a response and in which a respondent is a member or is otherwise involved, including any partner in such joint enterprise, joint venture, or partnership; and

(iii) a subcontractor to a respondent in connection with that respondent's response.

(I) SOLICITATION means an opportunity to compete to conduct business with the City that requires council approval under City Charter Article VII Section 15 (*Purchase Procedure*), and includes, without limitation:

(i) an invitation for bids;

(ii) a request for proposals;

(iii) a request for qualifications;

(iv) a notice of funding availability; and

(v) any other competitive solicitation process for which the purchasing officer, in the purchasing officer's sole discretion, affirmatively determines this article should apply in accordance with Section 2-B.

4. RESTRICTION ON LOBBYING.

Subject to the exclusions in Section 5 (*Permitted Communications*), during a no-lobbying period,

(A) a respondent or an agent shall not communicate directly with a City official or a City employee, or both in order to:

(i) provide substantive information about any respondent or response with respect to the solicitation to which the communication relates;

(ii) encourage the City to reject one or more of the responses to the solicitation to which the communication relates;

(iii) convey a complaint about the solicitation to which the communication relates; or

(iv) ask any City official or City employee to favor or oppose, recommend or not recommend, vote for or against, consider or not consider, or take action or refrain from taking action on any vote, decision, or agenda item regarding the solicitation to which the communication relates.

(B) a City official shall not contact or communicate with a respondent regarding a response or the solicitation to which the no-lobbying period applies;

(C) a City employee, other than the authorized contact person, shall not contact or communicate with a respondent regarding a response or the solicitation to which the no-lobbying period applies.

5. PERMITTED COMMUNICATIONS.

The following communications are permitted under this article at any time:

(A) any communication between a respondent or agent and any authorized contact person, including, without limitation and in accordance with regulation, any complaint concerning the solicitation;

(B) any communication between a respondent or agent and any person to the extent the communication relates solely to an existing contract between a respondent and the City, even when the scope, products, or services of the current contract are the same or similar to those contained in an active solicitation;

(C) any communication between a respondent or an agent and a City employee to the extent the communication relates solely to a non-substantive, procedural matter related to a response or solicitation;

(D) any communication required by or made during the course of a formal protest hearing related to a solicitation;

(E) any communication between a respondent or an agent and the City's Small & Minority Business Resources Department, that solely relates to compliance with Chapters 2-9A through 2-9D (*Minority-Owned and Women-Owned Business Enterprise Procurement Program*) of the City Code;

(F) any communication between an attorney representing a respondent and an attorney authorized to represent the City, to the extent the communication is permitted by the Texas Disciplinary Rules of Professional Conduct;

(G) any communication made by a respondent or an agent to the applicable governing body during the course of a meeting properly noticed and held under Texas Government Code Chapter 551 (*Open Meetings Act*);

(H) any communication between a respondent or an agent and a City employee whose official responsibility encompasses the setting of minimum insurance requirements for the solicitation to which the communication relates, to the extent the communication relates solely to the insurance requirements established by the City in the solicitation; and

(I) any contribution or expenditure as defined in Chapter 2-2 (*Campaign Finance*).

6. MODIFICATION OF RESTRICTION.

The purchasing officer may waive, modify, or reduce the requirements in Section 4 (*Restrictions on Lobbying*) in order to allow respondents to communicate with a City employee or a City official other than the authorized contact person when the purchasing officer determines, in writing, that the solicitation must be conducted in an expedited manner, including but not limited to a solicitation conducted for reasons of health or safety under the shortest schedule possible with no extensions. Any such modification authorized by the purchasing officer shall be stated in the solicitation.

7. NOTICE.

(A) Each solicitation shall include a notice advising respondents and prospective respondents:

(i) of the requirements of this article;

(ii) that any communication initiated by a City employee or City official, other than the authorized contact person, during the no-lobbying period regarding a response or the solicitation may result in a violation of Section 4(A) if the respondent subsequently lobbies that City employee or City official.

(B) The purchasing officer, or a City employee designated by the purchasing officer, shall provide weekly written notice, accessible to all City employees and City officials, of each solicitation for which the no-lobbying period is in effect.

8. DISCLOSURE OF VIOLATION.

A City official or a City employee other than the authorized contact person that becomes aware of a violation of Section 4 (*Restrictions on Lobbying*) shall notify the authorized contact person in writing as soon as practicable.

9. ENFORCEMENT.

(A) A respondent that has been disqualified pursuant to Section 10(A) (*Disqualification; Contract Voidable*) may appeal such disqualification to a subcommittee that is less than a quorum of the Ethics Review Commission established in Chapter 2-7, Article 2 (*Ethics Review Commission*), whose decision on appeal shall be final and binding. Any appeal must be filed in the manner prescribed by the Ethics Review Commission within 5 calendar days of the notice given by the purchasing officer pursuant to Section 10(B).

(B) The purchasing officer shall waive a violation of Section 4(A) if the violation was solely the result of communications initiated by a City official or a City employee other than the authorized contact person.

(C) The purchasing officer has the authority to enforce this article through rules promulgated in accordance with Chapter 1-2 (*Adoption of Rules*), which at a minimum shall include a notice and protest process for respondents disqualified pursuant to Section 10 (*Disqualification; Contract Voidable*), including:

(1) written notice of the disqualification imposed pursuant to Section 10 (*Disqualification; Contract Voidable*);
(2) written notice of the right to protest the disqualification imposed; and
(3) written notice of the right to request an impartial hearing process.

10. DISQUALIFICATION; CONTRACT VOIDABLE.

(A) If the purchasing officer finds that a respondent has violated Section 2-7-104(1), the respondent is disqualified from participating in the solicitation to which the violation related.

(B) The purchasing officer shall promptly provide written notice of disqualification to a disqualified respondent.

(C) If a respondent is disqualified from participating in a solicitation as a result of violating Section 2-7-104(1) and the solicitation is cancelled for any reason, that respondent is also disqualified from submitting a response to any reissue of the same or similar solicitation for the same or similar project. For the purposes of this section, the purchasing officer may determine whether any particular solicitation constitutes a “same or similar solicitation for the same or similar project”.

(D) If a respondent violates Section 104(1) and is awarded a contract resulting from the solicitation to which the violation relates, the City may void that contract.

(E) Respondents that violate Section 2-7-104(1) three or more times during a five year period may be subject to debarment from participating in any new contracts with the City for a period of up to three years.

8. **SUBMISSION OF OFFERS:** Offerors are required to submit an executed original and copies of the Offer as specified on the Offer Sheet of the Solicitation.

A. **Documents required with Offer:** Submit the following documents with the Offer, as applicable, prior to the Due Date (**SEE SECTIONS 0400, 0500 and 0600 IN THE SOLICITATION FOR ADDITIONAL REQUIRED INFORMATION). Failure to submit the documents may be grounds to reject the Offer:**

i. Cover Page, Offer Sheet signed by an authorized representative; ii. Section 0600, Bid/Quote Sheet or Offer, as applicable; iii. Section 0605, Local Business Presence Identification, if applicable;
iv. Section 0700, Reference Sheet, as applicable ;
v. Sections 0835 – Non-Resident Bidder Provisions;

vi. 0815, Living Wage and Benefits Contractor Certification, if applicable;
vii. Section 0900, MBE/WBE Procurement Program Package;
viii. Bid/Proposal Guaranty, if applicable; and ix.. any other document included in the Solicitation requiring completion or execution by the Offeror.

All other pages in the Solicitation should be retained by the Offeror.

B. **Mailing:** Offers and Compliance Plans (when required by the Solicitation), must be returned in a sealed envelope or container marked on the outside with the:

Offeror's Name & Address
Solicitation Number
Due Date and Time

i. If a MBE/WBE Compliance Plan is required, it may be submitted with the sealed Offer or in a separate sealed envelope. If the Compliance Plan is included with the Offer, the outside of the envelope must indicate that the Compliance Plan is included. If the Compliance Plan is submitted in a separate envelope, the outside of the envelope must identify the contents as the "Compliance Plan" and must also include the Offeror's name & address, the Solicitation number, and the Due Date and Time. If a Compliance Plan is required but is not submitted prior to the time set forth in the Solicitation, the Offer will not be accepted for consideration.
ii. When sending an Offer and/or Compliance Plan, use the proper address as shown below:

Address for US Mail (Only)	**Address for Fedex, UPS, Hand Delivery or Courier Service**
City of Austin	City of Austin, Municipal Building
Purchasing Office-Response Enclosed for Solicitation #	Purchasing Office-Response Enclosed for Solicitation #
P.O. Box 1088	124 W 8th Street, Rm 310
Austin, Texas 78767-8845	Austin, Texas 78701
	Reception Phone: (512) 974-2500

Note: Offers (including Compliance Plans) that are not submitted in a sealed envelope or container will not be considered.

iii. Unless authorized in the Solicitation, email, facsimile, or electronic Offers will not be accepted.

C. **Addendum:** Receipt of an Addendum should be acknowledged by signing and returning the Addendum with the Offer or under separate cover prior to the Due Date. The Addendum should be returned with the Offeror's name, address, the Solicitation number, and the Due Date and Time. If the elements covered in the addendum directly impact cost and the addendum is not returned before the Due Date and Time, the offer will be disqualified.

D. **Acceptance of Offers:** Offers must be received and time stamped at the receptionist's desk in the Purchasing Office prior to the Due Date and Time. The time stamp clock on the receptionist's desk in the Purchasing Office is the official time of record and is verified daily with the local time service at (512) 476-7744. It is the sole responsibility of the Offeror to ensure timely delivery of the Offer. The City will not be responsible for failure of service on the part of the U.S. Postal Office, courier companies, or any other form of delivery service chosen by the Offeror.

E. **Late Offers:** All Offers received after the Due Date and Time are considered late and will be returned to the Offeror. It is the responsibility of the Offeror to ensure that their Offer arrives at the proper location by the time and date indicated. Arrival at the City's mailroom, mail terminal, or post office box will not constitute the Offer arriving on time. Late Offers will be rejected unless the Purchasing Office, at its sole discretion, determines that the City's misdirection or mishandling was the sole or main cause for the Offer's late receipt at the designated location.

F. **Rejection of Offers:** The City reserves the right to reject any or all Offers and to waive any minor informality in any Offer or solicitation procedure (a minor informality is one that does not affect the competitiveness of the Offer).

9. **MODIFICATION OR WITHDRAWAL OF OFFERS:**

A. **Modification of Offers:** Offers may be modified in writing at any time prior to the Due Date.

B. **Withdrawal of Offers:** Offers may be withdrawn in writing, by email, or by facsimile (provided that the facsimile is signed by the Offeror) at any time prior to the Due Date. An Offeror may also withdraw an Offer in person, provided the withdrawal is made prior to the Due Date. A receipt of withdrawal must be signed by the Offeror. Withdrawn Offers may be resubmitted, with or without modifications, up to the Due Date.

10. **OPENING OF BIDS:** The Purchasing Office representative responsible for opening Bids shall confirm the time and announce the Bid opening. The representative shall then personally and publicly open all Bids timely received, reading each Bid aloud. Following the Bid opening, the City will post on the City's website the Bid Sheets from all timely received Bids.

11. **OPENING OF PROPOSALS / QUALIFICATIONS STATEMENTS AND RELEASE OF INFORMATION:** Proposals / Qualifications Statements will be opened in a manner that avoids disclosure of the contents. Following the Opening of Proposals / Qualification Statements, the City will post on the City's website the names of all Offerors submitting Proposals / Qualification Statements. At its sole discretion, the City may release to the public information that is contained in an opened Proposals / Qualifications Statement after City staff review, except as prescribed by State law, including Texas Government Code Chapter 552 and Local Government Code Chapter 252, provided that the City determines that the disclosure will not create a competitive disadvantage for the City.

12. **EVALUATION FACTORS AND AWARD FOR QUOTES AND BIDS:**

A. **Evaluation:** Offerors may furnish pricing for all or any portion of the Solicitation (unless otherwise specified). However, the City may evaluate and award the Contract for any item or group of items shown on the Solicitation, or any combination deemed most advantageous to the City. Offers that specify an "all or none" award may be considered if a single award is advantageous. An Offer containing prices significantly lower than all other Offeror's prices for an item will present a rebuttable presumption of irresponsibility.

B. **Award:** Request for Quotations and Invitations for Bids will be awarded to the Lowest Responsible Offeror. Invitation for Bids – Best Value will be awarded to the offeror who provides goods or services at the best value for the City based on factors outlined in Section 0600. Request for Quotations – Sale and Invitation for Bids – Sale will be awarded to the Highest Responsible Offeror.

C. **Local Business Presence:** A firm (Offeror or Subcontractor) is considered to have a Local Business Presence if the firm is headquartered in the Austin Corporate City Limits, or has a branch office located in the Austin Corporate City Limits in operation for the last five (5) years, currently employs residents of the City of Austin, Texas, and will use employees that reside in the City of Austin, Texas, to support this Contract. The City defines headquarters as the administrative center where most of the important

functions and full responsibility for managing and coordinating the business activities of the firm are located. The City defines branch office as a smaller, remotely located office that is separate from a firm's headquarters that offers the services requested and required under this solicitation.

(1) For Invitations for Bids if the City receives a competitive sealed bid from an offeror who has Local Business Presences and whose bid is within three percent of the lowest bid price received from an offeror who does not have Local Business Presence, the City may enter into a contract with the local vendor.

(2) For Request for Proposals and Invitation For Bids-Best Value: Points will be awarded through a combination of the Offeror's Local Business Presence and/or the Local Business Presence of their subcontractors per the below evaluation criteria. Evaluation of the Team's Percentage of Local Business Presence will be based on the dollar amount of goods and/or services as reflected in the Offeror's MBE/WBE Compliance Plan or MBE/WBE Utilization Plan. For Local Business Presence to be considered a completed Section 0605 must be returned with the Offer.

LOCAL BUSINESS PRESENCE (Maximum 10 points)

Team's Local Business Presence	Points Awarded
Local business presence of 90% to 100%	10
Local business presence of 75% to 89%	8
Local business presence of 50% to 74%	6
Local business presence of 25% to 49%	4
Local presence of between 1 and 24%	2
No local presence	0

D. **Acceptance of Quote/Bid:** Acceptance of a Quote/Bid for an open market purchase or supply or service Master Agreement will be by a Purchase Order or a Contract as appropriate. Subsequent Delivery Orders may be issued as appropriate. The contents of a Quote/Bid shall become a part of the Purchase Order/Contract. Under no circumstances will the City be responsible for Goods or Services provided without an acceptance signed by or authorized by an Authorized City Representative.

13. **EVALUATION FACTORS AND AWARD FOR PROPOSALS AND RESPONSES:**

Competitive Selection: This procurement will comply with applicable City of Austin Policy. The successful Proposer will be selected by the City on a rational basis. Evaluation factors outlined in Section 0600 of the Solicitation shall be applied to all eligible, responsive Proposers in comparing proposals and selecting the successful Proposer. Award of a contract may be made without discussion with Proposers after proposals are received. Proposals should, therefore, be submitted on the most favorable terms.

14. **RESERVATIONS:** The City expressly reserves the right to:

A. specify approximate quantities in the Solicitation;
B. extend the Solicitation closing date and time;
C. waive as an informality, minor deviations from specifications provided they do not affect competition or result in functionally unacceptable Goods or Services;
D. waive any minor informality in any Offer or Solicitation procedure (a minor informality is one that does not affect the competitiveness of the Offeror);
E. add additional terms or modify existing terms in the Solicitation;
F. reject an Offer containing exceptions, additions, qualifications or conditions not called for in the solicitation;
G. reject an Offer received from an Offeror who is currently debarred or suspended by the City or State;

H. reject an Offer received from an Offeror who is currently debarred or suspended by the Federal Government (Applicable if project receives Federal funding);
I. reject an Offer that contains fraudulent information;
J. reject an Offer that has material omissions;
K. reject or cancel any or all Offers;
L. reissue a Solicitation;
M. procure any item by other means;
N. consider and accept alternate Offers, if specified in the Solicitation, when most advantageous to the City; and/or
O. reject an Offer because of unbalanced unit prices;

15. **NEGOTIATIONS OF PROPOSALS:** The City reserves the right to negotiate all elements which comprise the Offeror's Proposal to ensure that the best possible consideration be afforded to all concerned.

16. **CONTRACT INCORPORATION:** Offeror should be aware that the contents of the successful Offer will become a part of the subsequent contractual documents. Failure of the successful Offeror to accept this obligation may result in the cancellation of any award. Any damages accruing to the City as a result of the successful Offeror's failure to contract may be recovered from the successful Offeror.

17. **OPPORTUNITY TO PROTEST:** The Purchasing Officer has the authority to settle or resolve any claim of an alleged deficiency or protest. The procedures for notifying the City of Austin of an alleged deficiency or filing a protest are listed below. If you fail to comply with any of these requirements, the Purchasing Officer may dismiss your complaint or protest.

A. **Prior to Offer Due Date:** If you are a prospective Offeror and you become aware of the facts regarding what you believe is a deficiency in the solicitation process before the Due Date for receipt of Offers, you must notify the City in writing of the alleged deficiency before that date, giving the City an opportunity to resolve the situation prior to the Offer Due Date.

B. **After Offer Due Date:** If you submit an Offer to the City and you believe that there has been a deficiency in the solicitation process or the award, you have the opportunity to protest the solicitation process or the recommended award as follows:

i. You must file written notice of your intent to protest within four (4) calendar days of the date that you know or should have known of the facts relating to the protest. If you do not file a written notice of intent within this time, you have waived all rights to protest the solicitation process or the award.
ii. You must file your written protest within fourteen (14) calendar days of the date that you know or should have known of the facts relating to the protest unless you know of the facts before the Offer has been closed. If you know of the facts before those dates, you must notify the City as stated above.
iii. You must submit your protest in writing and must include the following information:
(1) your name, address, telephone, and fax number;
(2) the solicitation number and the CIP number, if applicable;
(3) a detailed statement of the factual grounds for the protest, including copies of any relevant documents.
iv. Your protest must be concise and presented logically and factually to help with the City's review.
v. When the City receives a timely written protest, the Purchasing Officer will determine whether the grounds for your protest are sufficient. If the Purchasing Officer decides that the grounds are sufficient, the Purchasing Office will schedule a protest hearing, usually within five (5) working days. If the Purchasing Officer determines that your grounds are insufficient, the City will notify you of that decision in writing.
vi. The protest hearing is informal and is not subject to the Open Meetings Act. The purpose of the hearing is to give you a chance to present your case, it is not an adversarial proceeding. Those who may attend from the City are: representatives from the department that requested the

purchase, the Department of Law, the Purchasing Office, and other appropriate City staff. You may bring a representative or anyone else that will present information to support the factual grounds for your protest with you to the hearing.

vii. A decision will usually be made within fifteen (15) calendar days after the hearing.

viii. The City will send you a copy of the hearing decision after the appropriate City staff has reviewed the decision.

ix. When a protest is filed, the City usually will not make an award until a decision on the protest is made. However, the City will not delay an award if the City Manager or the Purchasing Officer determines that:

(1) the City urgently requires the supplies or services to be purchased, or

(2) failure to make an award promptly will unduly delay delivery or performance.

In those instances, the City will notify you and make every effort to resolve your protest before the award.

18. **INTERESTED PARTIES DISCLOSURE**

As a condition to entering the Contract, the Business Entity constituting the Offeror must provide the following disclosure of Interested Parties to the City prior to the award of a contract with the City on Form 1295 "Certificate of Interested Parties" as prescribed by the Texas Ethics Commission for any contract award requiring council authorization. The Certificate of Interested Parties Form must be completed on the Texas Ethics Commission website, printed, and signed by the authorized agent of the Business Entity with acknowledgment that disclosure is made under oath and under penalty of perjury. The City will submit the "Certificate of Interested Parties" to the Texas Ethics Commission within 30 days of receipt from the successful Offeror. The Offeror is reminded that the provisions of Local Government Code 176, regarding conflicts of interest between the bidders and local officials remains in place. Link to Texas Ethics Commission Form 1295 process and procedures below:

https://www.ethics.state.tx.us/File/

19. **POST OFFER DOCUMENTS REQUIRED FROM SUCCESSFUL OFFEROR:**

A. **Letters of Intent:** When a MBE/WBE Compliance Plan is required, the successful Offeror must submit to the Purchasing Officer the Letters of Intent to subcontract required by the Compliance Plan within three (1) business days after notification. Failure to submit the required letters will be grounds for rejection of the Offer.

B. **Certificates of Insurance:** When insurance is required, the Offeror must provide proof of coverage prior to execution of a Contract. The Offeror shall provide Certificates of Insurance in the amounts and for the coverages required to the Purchasing Office within 14 calendar days after written request from the City (See also "Insurance" in Section 0400, Supplement Purchase Provisions, of the Solicitation).

C. **Bonds:** When Bonds are required, the Offeror must provide the bonds prior to the execution of the Contract. The Offeror shall provide the Bonds, in the amounts and on the conditions required, within 14 calendar days after notification of award, or as otherwise required by the Solicitation.

D. **Chapter 176 Conflict of Interest Disclosure:** In accordance with Chapter 176 of the Texas Local Government Code, Offeror must file a Conflict of Interest Questionnaire with the Office of the City Clerk no later than 5:00 P.M. on the seventh (7th) business day after the commencement of contract discussions or negotiations with the City or the submission of an Offer, or other writing related to a potential Contract with the City. The questionnaire is available on line at the following website for the City Clerk:

http://www.austintexas.gov/department/conflict-interest-questionnaire

There are statutory penalties for failure to comply with Chapter 176.

CITY OF AUSTIN
PURCHASING OFFICE
SECTION 0300: STANDARD PURCHASE TERMS AND CONDITIONS

By submitting an Offer in response to the Solicitation, the Contractor agrees that the Contract shall be governed by the following terms and conditions. Unless otherwise specified in the Contract, Sections 3, 4, 5, 6, 7, 8, 20, 21, and 36 shall apply only to a Solicitation to purchase Goods, and Sections 9, 10, 11 and 22 shall apply only to a Solicitation to purchase Services to be performed principally at the City's premises or on public rights-of-way.

1. **CONTRACTOR'S OBLIGATIONS**. The Contractor shall fully and timely provide all Deliverables described in the Solicitation and in the Contractor's Offer in strict accordance with the terms, covenants, and conditions of the Contract and all applicable Federal, State, and local laws, rules, and regulations.

2. **EFFECTIVE DATE/TERM**. Unless otherwise specified in the Solicitation, this Contract shall be effective as of the date the contract is signed by the City, and shall continue in effect until all obligations are performed in accordance with the Contract.

3. **CONTRACTOR TO PACKAGE DELIVERABLES**: The Contractor will package Deliverables in accordance with good commercial practice and shall include a packing list showing the description of each item, the quantity and unit price Unless otherwise provided in the Specifications or Supplemental Terms and Conditions, each shipping container shall be clearly and permanently marked as follows: (a) The Contractor's name and address, (b) the City's name, address and purchase order or purchase release number and the price agreement number if applicable, (c) Container number and total number of containers, e.g. box 1 of 4 boxes, and (d) the number of the container bearing the packing list. The Contractor shall bear cost of packaging. Deliverables shall be suitably packed to secure lowest transportation costs and to conform with requirements of common carriers and any applicable specifications. The City's count or weight shall be final and conclusive on shipments not accompanied by packing lists.

4. **SHIPMENT UNDER RESERVATION PROHIBITED**: The Contractor is not authorized to ship the Deliverables under reservation and no tender of a bill of lading will operate as a tender of Deliverables.

5. **TITLE & RISK OF LOSS**: Title to and risk of loss of the Deliverables shall pass to the City only when the City actually receives and accepts the Deliverables.

6. **DELIVERY TERMS AND TRANSPORTATION CHARGES**: Deliverables shall be shipped F.O.B. point of delivery unless otherwise specified in the Supplemental Terms and Conditions. Unless otherwise stated in the Offer, the Contractor's price shall be deemed to include all delivery and transportation charges. The City shall have the right to designate what method of transportation shall be used to ship the Deliverables. The place of delivery shall be that set forth in the block of the purchase order or purchase release entitled "Receiving Agency".

7. **RIGHT OF INSPECTION AND REJECTION**: The City expressly reserves all rights under law, including, but not limited to the Uniform Commercial Code, to inspect the Deliverables at delivery before accepting them, and to reject defective or non-conforming Deliverables. If the City has the right to inspect the Contractor's, or the Contractor's Subcontractor's, facilities, or the Deliverables at the Contractor's, or the Contractor's Subcontractor's, premises, the Contractor shall furnish, or cause to be furnished, without additional charge, all reasonable facilities and assistance to the City to facilitate such inspection.

8. **NO REPLACEMENT OF DEFECTIVE TENDER**: Every tender or delivery of Deliverables must fully comply with all provisions of the Contract as to time of delivery, quality, and quantity. Any non-complying tender shall constitute a breach and the Contractor shall not have the right to substitute a conforming tender; provided, where the time for performance has not yet expired, the Contractor may notify the City of the intention to cure and may then make a conforming tender within the time allotted in the contract.

9. **PLACE AND CONDITION OF WORK**: The City shall provide the Contractor access to the sites where the Contractor is to perform the services as required in order for the Contractor to perform the services in a timely and efficient manner, in accordance with and subject to the applicable security laws, rules, and regulations. The Contractor acknowledges that it has satisfied itself as to the nature of the City's service requirements and specifications, the location and essential characteristics of the work sites, the quality and quantity of materials, equipment, labor and facilities necessary to perform the services, and any other condition or state of fact which could in any way affect performance of the Contractor's obligations under the contract. The Contractor hereby releases and holds the City

harmless from and against any liability or claim for damages of any kind or nature if the actual site or service conditions differ from expected conditions.

10. **WORKFORCE**

A. The Contractor shall employ only orderly and competent workers, skilled in the performance of the services which they will perform under the Contract.

B. The Contractor, its employees, subcontractors, and subcontractor's employees may not while engaged in participating or responding to a solicitation or while in the course and scope of delivering goods or services under a City of Austin contract or on the City's property .

i. use or possess a firearm, including a concealed handgun that is licensed under state law, except as required by the terms of the contract; or
ii. use or possess alcoholic or other intoxicating beverages, illegal drugs or controlled substances, nor may such workers be intoxicated, or under the influence of alcohol or drugs, on the job.

C. If the City or the City's representative notifies the Contractor that any worker is incompetent, disorderly or disobedient, has knowingly or repeatedly violated safety regulations, has possessed any firearms, or has possessed or was under the influence of alcohol or drugs on the job, the Contractor shall immediately remove such worker from Contract services, and may not employ such worker again on Contract services without the City's prior written consent.

11. **COMPLIANCE WITH HEALTH, SAFETY, AND ENVIRONMENTAL REGULATIONS**: The Contractor, its Subcontractors, and their respective employees, shall comply fully with all applicable federal, state, and local health, safety, and environmental laws, ordinances, rules and regulations in the performance of the services, including but not limited to those promulgated by the City and by the Occupational Safety and Health Administration (OSHA). In case of conflict, the most stringent safety requirement shall govern. The Contractor shall indemnify and hold the City harmless from and against all claims, demands, suits, actions, judgments, fines, penalties and liability of every kind arising from the breach of the Contractor's obligations under this paragraph.

12. **INVOICES**:

A. The Contractor shall submit separate invoices in duplicate on each purchase order or purchase release after each delivery. If partial shipments or deliveries are authorized by the City, a separate invoice must be sent for each shipment or delivery made.

B. **Proper Invoices must include a unique invoice number, the purchase order or delivery order number and the master agreement number if applicable, the Department's Name, and the name of the point of contact for the Department**. Invoices shall be itemized and transportation charges, if any, shall be listed separately. A copy of the bill of lading and the freight waybill, when applicable, shall be attached to the invoice. The Contractor's name and, if applicable, the tax identification number on the invoice must exactly match the information in the Vendor's registration with the City. Unless otherwise instructed in writing, the City may rely on the remittance address specified on the Contractor's invoice.

C. Invoices for labor shall include a copy of all time-sheets with trade labor rate and Deliverables order number clearly identified. Invoices shall also include a tabulation of work-hours at the appropriate rates and grouped by work order number. Time billed for labor shall be limited to hours actually worked at the work site.

D. Unless otherwise expressly authorized in the Contract, the Contractor shall pass through all Subcontract and other authorized expenses at actual cost without markup.

E. Federal excise taxes, State taxes, or City sales taxes must not be included in the invoiced amount. The City will furnish a tax exemption certificate upon request.

13. **PAYMENT**:

A. All proper invoices received by the City will be paid within thirty (30) calendar days of the City's receipt of the Deliverables or of the invoice, whichever is later.

B. **If payment is not timely made, (per paragraph A), interest shall accrue on the unpaid balance at the lesser of the rate specified in Texas Government Code Section 2251.025 or the maximum lawful rate; except, if payment is not timely made for a reason for which the City may withhold payment hereunder, interest shall not accrue until ten (10) calendar days after the grounds for withholding payment have been resolved.**

C. If partial shipments or deliveries are authorized by the City, the Contractor will be paid for the partial shipment or delivery, as stated above, provided that the invoice matches the shipment or delivery.

D. The City may withhold or set off the entire payment or part of any payment otherwise due the Contractor to such extent as may be necessary on account of:

i. delivery of defective or non-conforming Deliverables by the Contractor;
ii. third party claims, which are not covered by the insurance which the Contractor is required to provide, are filed or reasonable evidence indicating probable filing of such claims;
iii. failure of the Contractor to pay Subcontractors, or for labor, materials or equipment;
iv. damage to the property of the City or the City's agents, employees or contractors, which is not covered by insurance required to be provided by the Contractor;
v. reasonable evidence that the Contractor's obligations will not be completed within the time specified in the Contract, and that the unpaid balance would not be adequate to cover actual or liquidated damages for the anticipated delay;
vi. failure of the Contractor to submit proper invoices with all required attachments and supporting documentation; or
vii. failure of the Contractor to comply with any material provision of the Contract Documents.

E. Notice is hereby given of Article VIII, Section 1 of the Austin City Charter which prohibits the payment of any money to any person, firm or corporation who is in arrears to the City for taxes, and of §2-8-3 of the Austin City Code concerning the right of the City to offset indebtedness owed the City.

F. Payment will be made by check unless the parties mutually agree to payment by credit card or electronic transfer of funds. The Contractor agrees that there shall be no additional charges, surcharges, or penalties to the City for payments made by credit card or electronic funds transfer.

G. The awarding or continuation of this contract is dependent upon the availability of funding. The City's payment obligations are payable only and solely from funds Appropriated and available for this contract. The absence of Appropriated or other lawfully available funds shall render the Contract null and void to the extent funds are not Appropriated or available and any Deliverables delivered but unpaid shall be returned to the Contractor. The City shall provide the Contractor written notice of the failure of the City to make an adequate Appropriation for any fiscal year to pay the amounts due under the Contract, or the reduction of any Appropriation to an amount insufficient to permit the City to pay its obligations under the Contract. In the event of non or inadequate appropriation of funds, there will be no penalty nor removal fees charged to the City.

14. **TRAVEL EXPENSES**: All travel, lodging and per diem expenses in connection with the Contract for which reimbursement may be claimed by the Contractor under the terms of the Solicitation will be reviewed against the City's Travel Policy as published and maintained by the City's Controller's Office and the Current United States General Services Administration Domestic Per Diem Rates (the "Rates") as published and maintained on the Internet at:

http://www.gsa.gov/portal/category/21287

No amounts in excess of the Travel Policy or Rates shall be paid. All invoices must be accompanied by copies of detailed itemized receipts (e.g. hotel bills, airline tickets). No reimbursement will be made for expenses not actually incurred. Airline fares in excess of coach or economy will not be reimbursed. Mileage charges may not exceed the amount permitted as a deduction in any year under the Internal Revenue Code or Regulations.

15. **FINAL PAYMENT AND CLOSE-OUT**:

A. If an MBE/WBE Program Compliance Plan is required by the Solicitation, and the Contractor has identified Subcontractors, the Contractor is required to submit a Contract Close-Out MBE/WBE Compliance Report to the Project manager or Contract manager no later than the 15th calendar day after completion of all work under the contract. Final payment, retainage, or both may be withheld if the Contractor is not in compliance with the requirements of the Compliance Plan as accepted by the City.

B. The making and acceptance of final payment will constitute:

i. a waiver of all claims by the City against the Contractor, except claims (1) which have been previously asserted in writing and not yet settled, (2) arising from defective work appearing after final inspection, (3) arising from failure of the Contractor to comply with the Contract or the terms of any warranty specified herein, (4) arising from the Contractor's continuing obligations under the Contract, including but not limited to indemnity and warranty obligations, or (5) arising under the City's right to audit; and

ii. a waiver of all claims by the Contractor against the City other than those previously asserted in writing and not yet settled.

16. **SPECIAL TOOLS & TEST EQUIPMENT**: If the price stated on the Offer includes the cost of any special tooling or special test equipment fabricated or required by the Contractor for the purpose of filling this order, such special tooling equipment and any process sheets related thereto shall become the property of the City and shall be identified by the Contractor as such.

17. **AUDITS and RECORDS**:

A. The Contractor agrees that the representatives of the Office of the City Auditor or other authorized representatives of the City shall have access to, and the right to audit, examine, or reproduce, any and all records of the Contractor related to the performance under this Contract. The Contractor shall retain all such records for a period of three (3) years after final payment on this Contract or until all audit and litigation matters that the City has brought to the attention of the Contractor are resolved, whichever is longer. The Contractor agrees to refund to the City any overpayments disclosed by any such audit.

B. Records Retention:

i. Contractor is subject to City Code chapter 2-11 (Records Management), and as it may subsequently be amended. For purposes of this subsection, a Record means all books, accounts, reports, files, and other data recorded or created by a Contractor in fulfillment of the Contract whether in digital or physical format, except a record specifically relating to the Contractor's internal administration.

ii. All Records are the property of the City. The Contractor may not dispose of or destroy a Record without City authorization and shall deliver the Records, in all requested formats and media, along with all finding aids and metadata, to the City at no cost when requested by the City

iii. The Contractor shall retain all Records for a period of three (3) years after final payment on this Contract or until all audit and litigation matters that the City has brought to the attention of the Contractor are resolved, whichever is longer.

C. The Contractor shall include sections A and B above in all subcontractor agreements entered into in connection with this Contract.

18. **Financial Disclosures and Assurances:** The City may request and review financial information as the City requires to determine the credit worthiness of the Contractor, including but not limited to, annual reports, audited financial statements and reports, bank letters of credit or other credit instruments. Failure of the Contractor to comply with this requirement shall be grounds for terminating the Contract.

19. **SUBCONTRACTORS**:

A. If the Contractor identified Subcontractors in an MBE/WBE Program Compliance Plan or a No Goals Utilization Plan the Contractor shall comply with the provisions of Chapters 2-9A, 2-9B, 2-9C, and 2-9D, as applicable, of the Austin City Code and the terms of the Compliance Plan or Utilization Plan as approved by the City (the "Plan"). The Contractor shall not initially employ any Subcontractor except as provided in the Contractor's Plan. The Contractor shall not substitute any Subcontractor identified in the Plan, unless the substitute has been accepted by the City in writing in accordance with the provisions of Chapters 2-9A, 2-9B, 2-9C and 2-9D, as applicable. No acceptance by the City of any Subcontractor shall constitute a waiver of any rights or remedies of the City with respect to defective Deliverables provided by a Subcontractor. If a Plan has been approved, the Contractor is additionally required to submit a monthly Subcontract Awards and Expenditures Report to the Contract Manager and the Purchasing Office Contract Compliance Manager no later than the tenth calendar day of each month.

B. Work performed for the Contractor by a Subcontractor shall be pursuant to a written contract between the Contractor and Subcontractor. The terms of the subcontract may not conflict with the terms of the Contract, and shall contain provisions that:

i. require that all Deliverables to be provided by the Subcontractor be provided in strict accordance with the provisions, specifications and terms of the Contract;
ii. prohibit the Subcontractor from further subcontracting any portion of the Contract without the prior written consent of the City and the Contractor. The City may require, as a condition to such further subcontracting, that the Subcontractor post a payment bond in form, substance and amount acceptable to the City;
iii. require Subcontractors to submit all invoices and applications for payments, including any claims for additional payments, damages or otherwise, to the Contractor in sufficient time to enable the Contractor to include same with its invoice or application for payment to the City in accordance with the terms of the Contract;
iv. require that all Subcontractors obtain and maintain, throughout the term of their contract, insurance in the type and amounts specified for the Contractor, with the City being a named insured as its interest shall appear; and
v. require that the Subcontractor indemnify and hold the City harmless to the same extent as the Contractor is required to indemnify the City.

C. The Contractor shall be fully responsible to the City for all acts and omissions of the Subcontractors just as the Contractor is responsible for the Contractor's own acts and omissions. Nothing in the Contract shall create for the benefit of any such Subcontractor any contractual relationship between the City and any such Subcontractor, nor shall it create any obligation on the part of the City to pay or to see to the payment of any moneys due any such Subcontractor except as may otherwise be required by law.

D. The Contractor shall pay each Subcontractor its appropriate share of payments made to the Contractor not later than ten (10) calendar days after receipt of payment from the City.

20. **WARRANTY-PRICE**:

A. The Contractor warrants the prices quoted in the Offer are no higher than the Contractor's current prices on orders by others for like Deliverables under similar terms of purchase.

B. The Contractor certifies that the prices in the Offer have been arrived at independently without consultation, communication, or agreement for the purpose of restricting competition, as to any matter relating to such fees with any other firm or with any competitor.

C. In addition to any other remedy available, the City may deduct from any amounts owed to the Contractor, or otherwise recover, any amounts paid for items in excess of the Contractor's current prices on orders by others for like Deliverables under similar terms of purchase.

20. **WARRANTY – TITLE**: The Contractor warrants that it has good and indefeasible title to all Deliverables furnished under the Contract, and that the Deliverables are free and clear of all liens, claims, security interests and encumbrances. The Contractor shall indemnify and hold the City harmless from and against all adverse title claims to the Deliverables.

21. **WARRANTY – DELIVERABLES**: The Contractor warrants and represents that all Deliverables sold the City under the Contract shall be free from defects in design, workmanship or manufacture, and conform in all material respects to the specifications, drawings, and descriptions in the Solicitation, to any samples furnished by the Contractor, to the terms, covenants and conditions of the Contract, and to all applicable State, Federal or local laws, rules, and regulations, and industry codes and standards. Unless otherwise stated in the Solicitation, the Deliverables shall be new or recycled merchandise, and not used or reconditioned.

A. Recycled Deliverables shall be clearly identified as such.

B. The Contractor may not limit, exclude or disclaim the foregoing warranty or any warranty implied by law; and any attempt to do so shall be without force or effect.

C. Unless otherwise specified in the Contract, the warranty period shall be at least one year from the date of acceptance of the Deliverables or from the date of acceptance of any replacement Deliverables. If during the warranty period, one or more of the above warranties are breached, the Contractor shall promptly upon receipt of demand either repair the non-conforming Deliverables, or replace the non-conforming Deliverables with fully conforming Deliverables, at the City's option and at no additional cost to the City. All costs incidental to such repair or replacement, including but not limited to, any packaging and shipping costs, shall be borne exclusively by the Contractor. The City shall endeavor to give the Contractor written notice of the breach of warranty within thirty (30) calendar days of discovery of the breach of warranty, but failure to give timely notice shall not impair the City's rights under this section.

D. If the Contractor is unable or unwilling to repair or replace defective or non-conforming Deliverables as required by the City, then in addition to any other available remedy, the City may reduce the quantity of Deliverables it may be required to purchase under the Contract from the Contractor, and purchase conforming Deliverables from other sources. In such event, the Contractor shall pay to the City upon demand the increased cost, if any, incurred by the City to procure such Deliverables from another source.

E. If the Contractor is not the manufacturer, and the Deliverables are covered by a separate manufacturer's warranty, the Contractor shall transfer and assign such manufacturer's warranty to the City. If for any reason the manufacturer's warranty cannot be fully transferred to the City, the Contractor shall assist and cooperate with the City to the fullest extent to enforce such manufacturer's warranty for the benefit of the City.

22. **WARRANTY – SERVICES**: The Contractor warrants and represents that all services to be provided the City under the Contract will be fully and timely performed in a good and workmanlike manner in accordance with generally accepted industry standards and practices, the terms, conditions, and covenants of the Contract, and all applicable Federal, State and local laws, rules or regulations.

A. The Contractor may not limit, exclude or disclaim the foregoing warranty or any warranty implied by law, and any attempt to do so shall be without force or effect.

B. Unless otherwise specified in the Contract, the warranty period shall be at least one year from the Acceptance Date. If during the warranty period, one or more of the above warranties are breached, the Contractor shall promptly upon receipt of demand perform the services again in accordance with above standard at no additional cost to the City. All costs incidental to such additional performance shall be borne by the Contractor. The City shall endeavor to give the Contractor written notice of the breach of warranty within thirty (30) calendar days of

discovery of the breach warranty, but failure to give timely notice shall not impair the City's rights under this section.

C. If the Contractor is unable or unwilling to perform its services in accordance with the above standard as required by the City, then in addition to any other available remedy, the City may reduce the amount of services it may be required to purchase under the Contract from the Contractor, and purchase conforming services from other sources. In such event, the Contractor shall pay to the City upon demand the increased cost, if any, incurred by the City to procure such services from another source.

23. **ACCEPTANCE OF INCOMPLETE OR NON-CONFORMING DELIVERABLES**: If, instead of requiring immediate correction or removal and replacement of defective or non-conforming Deliverables, the City prefers to accept it, the City may do so. The Contractor shall pay all claims, costs, losses and damages attributable to the City's evaluation of and determination to accept such defective or non-conforming Deliverables. If any such acceptance occurs prior to final payment, the City may deduct such amounts as are necessary to compensate the City for the diminished value of the defective or non-conforming Deliverables. If the acceptance occurs after final payment, such amount will be refunded to the City by the Contractor.

24. **RIGHT TO ASSURANCE**: Whenever one party to the Contract in good faith has reason to question the other party's intent to perform, demand may be made to the other party for written assurance of the intent to perform. In the event that no assurance is given within the time specified after demand is made, the demanding party may treat this failure as an anticipatory repudiation of the Contract.

25. **STOP WORK NOTICE**: The City may issue an immediate Stop Work Notice in the event the Contractor is observed performing in a manner that is in violation of Federal, State, or local guidelines, or in a manner that is determined by the City to be unsafe to either life or property. Upon notification, the Contractor will cease all work until notified by the City that the violation or unsafe condition has been corrected. The Contractor shall be liable for all costs incurred by the City as a result of the issuance of such Stop Work Notice.

26. **DEFAULT**: The Contractor shall be in default under the Contract if the Contractor (a) fails to fully, timely and faithfully perform any of its material obligations under the Contract, (b) fails to provide adequate assurance of performance under Paragraph 24, (c) becomes insolvent or seeks relief under the bankruptcy laws of the United States or (d) makes a material misrepresentation in Contractor's Offer, or in any report or deliverable required to be submitted by the Contractor to the City.

27. **TERMINATION FOR CAUSE:**. In the event of a default by the Contractor, the City shall have the right to terminate the Contract for cause, by written notice effective ten (10) calendar days, unless otherwise specified, after the date of such notice, unless the Contractor, within such ten (10) day period, cures such default, or provides evidence sufficient to prove to the City's reasonable satisfaction that such default does not, in fact, exist. The City may place Contractor on probation for a specified period of time within which the Contractor must correct any non-compliance issues. Probation shall not normally be for a period of more than nine (9) months, however, it may be for a longer period, not to exceed one (1) year depending on the circumstances. If the City determines the Contractor has failed to perform satisfactorily during the probation period, the City may proceed with suspension. In the event of a default by the Contractor, the City may suspend or debar the Contractor in accordance with the "City of Austin Purchasing Office Probation, Suspension and Debarment Rules for Vendors" and remove the Contractor from the City's vendor list for up to five (5) years and any Offer submitted by the Contractor may be disqualified for up to five (5) years. In addition to any other remedy available under law or in equity, the City shall be entitled to recover all actual damages, costs, losses and expenses, incurred by the City as a result of the Contractor's default, including, without limitation, cost of cover, reasonable attorneys' fees, court costs, and prejudgment and post-judgment interest at the maximum lawful rate. All rights and remedies under the Contract are cumulative and are not exclusive of any other right or remedy provided by law.

28. **TERMINATION WITHOUT CAUSE**: The City shall have the right to terminate the Contract, in whole or in part, without cause any time upon thirty (30) calendar days' prior written notice. Upon receipt of a notice of termination, the Contractor shall promptly cease all further work pursuant to the Contract, with such exceptions, if any, specified in the notice of termination. The City shall pay the Contractor, to the extent of funds Appropriated or otherwise legally

available for such purposes, for all goods delivered and services performed and obligations incurred prior to the date of termination in accordance with the terms hereof.

29. **FRAUD**: Fraudulent statements by the Contractor on any Offer or in any report or deliverable required to be submitted by the Contractor to the City shall be grounds for the termination of the Contract for cause by the City and may result in legal action.

30. **DELAYS**:

A. The City may delay scheduled delivery or other due dates by written notice to the Contractor if the City deems it is in its best interest. If such delay causes an increase in the cost of the work under the Contract, the City and the Contractor shall negotiate an equitable adjustment for costs incurred by the Contractor in the Contract price and execute an amendment to the Contract. The Contractor must assert its right to an adjustment within thirty (30) calendar days from the date of receipt of the notice of delay. Failure to agree on any adjusted price shall be handled under the Dispute Resolution process specified in paragraph 48. However, nothing in this provision shall excuse the Contractor from delaying the delivery as notified.

B. Neither party shall be liable for any default or delay in the performance of its obligations under this Contract if, while and to the extent such default or delay is caused by acts of God, fire, riots, civil commotion, labor disruptions, sabotage, sovereign conduct, or any other cause beyond the reasonable control of such Party. In the event of default or delay in contract performance due to any of the foregoing causes, then the time for completion of the services will be extended; provided, however, in such an event, a conference will be held within three (3) business days to establish a mutually agreeable period of time reasonably necessary to overcome the effect of such failure to perform.

31. **INDEMNITY**:

A. Definitions:

i. "Indemnified Claims" shall include any and all claims, demands, suits, causes of action, judgments and liability of every character, type or description, including all reasonable costs and expenses of litigation, mediation or other alternate dispute resolution mechanism, including attorney and other professional fees for:
(1) damage to or loss of the property of any person (including, but not limited to the City, the Contractor, their respective agents, officers, employees and subcontractors; the officers, agents, and employees of such subcontractors; and third parties); and/or
(2) death, bodily injury, illness, disease, worker's compensation, loss of services, or loss of income or wages to any person (including but not limited to the agents, officers and employees of the City, the Contractor, the Contractor's subcontractors, and third parties),

ii. "Fault" shall include the sale of defective or non-conforming Deliverables, negligence, willful misconduct, or a breach of any legally imposed strict liability standard.

B. **THE CONTRACTOR SHALL DEFEND (AT THE OPTION OF THE CITY), INDEMNIFY, AND HOLD THE CITY, ITS SUCCESSORS, ASSIGNS, OFFICERS, EMPLOYEES AND ELECTED OFFICIALS HARMLESS FROM AND AGAINST ALL INDEMNIFIED CLAIMS DIRECTLY ARISING OUT OF, INCIDENT TO, CONCERNING OR RESULTING FROM THE FAULT OF THE CONTRACTOR, OR THE CONTRACTOR'S AGENTS, EMPLOYEES OR SUBCONTRACTORS, IN THE PERFORMANCE OF THE CONTRACTOR'S OBLIGATIONS UNDER THE CONTRACT. NOTHING HEREIN SHALL BE DEEMED TO LIMIT THE RIGHTS OF THE CITY OR THE CONTRACTOR (INCLUDING, BUT NOT LIMITED TO, THE RIGHT TO SEEK CONTRIBUTION) AGAINST ANY THIRD PARTY WHO MAY BE LIABLE FOR AN INDEMNIFIED CLAIM.**

32. **INSURANCE**: (reference Section 0400 for specific coverage requirements). The following insurance requirement applies. (Revised March 2013).

A. General Requirements.

i. The Contractor shall at a minimum carry insurance in the types and amounts indicated in Section 0400, Supplemental Purchase Provisions, for the duration of the Contract, including extension options and hold over periods, and during any warranty period.

ii. The Contractor shall provide Certificates of Insurance with the coverages and endorsements required in Section 0400, Supplemental Purchase Provisions, to the City as verification of coverage prior to contract execution and within fourteen (14) calendar days after written request from the City. Failure to provide the required Certificate of Insurance may subject the Offer to disqualification from consideration for award. The Contractor must also forward a Certificate of Insurance to the City whenever a previously identified policy period has expired, or an extension option or hold over period is exercised, as verification of continuing coverage.

iii. The Contractor shall not commence work until the required insurance is obtained and until such insurance has been reviewed by the City. Approval of insurance by the City shall not relieve or decrease the liability of the Contractor hereunder and shall not be construed to be a limitation of liability on the part of the Contractor.

iv. The City may request that the Contractor submit certificates of insurance to the City for all subcontractors prior to the subcontractors commencing work on the project.

v. The Contractor's and all subcontractors' insurance coverage shall be written by companies licensed to do business in the State of Texas at the time the policies are issued and shall be written by companies with A.M. Best ratings of B+VII or better.

vi. The "other" insurance clause shall not apply to the City where the City is an additional insured shown on any policy. It is intended that policies required in the Contract, covering both the City and the Contractor, shall be considered primary coverage as applicable.

vii. If insurance policies are not written for amounts specified in Section 0400, Supplemental Purchase Provisions, the Contractor shall carry Umbrella or Excess Liability Insurance for any differences in amounts specified. If Excess Liability Insurance is provided, it shall follow the form of the primary coverage.

viii. The City shall be entitled, upon request, at an agreed upon location, and without expense, to review certified copies of policies and endorsements thereto and may make any reasonable requests for deletion or revision or modification of particular policy terms, conditions, limitations, or exclusions except where policy provisions are established by law or regulations binding upon either of the parties hereto or the underwriter on any such policies.

ix. The City reserves the right to review the insurance requirements set forth during the effective period of the Contract and to make reasonable adjustments to insurance coverage, limits, and exclusions when deemed necessary and prudent by the City based upon changes in statutory law, court decisions, the claims history of the industry or financial condition of the insurance company as well as the Contractor.

x. The Contractor shall not cause any insurance to be canceled nor permit any insurance to lapse during the term of the Contract or as required in the Contract.

xi. The Contractor shall be responsible for premiums, deductibles and self-insured retentions, if any, stated in policies. Self-insured retentions shall be disclosed on the Certificate of Insurance.

xii. The Contractor shall provide the City thirty (30) calendar days' written notice of erosion of the aggregate limits below occurrence limits for all applicable coverages indicated within the Contract.

xiii. The insurance coverages specified in Section 0400, Supplemental Purchase Provisions, are required minimums and are not intended to limit the responsibility or liability of the Contractor.

B. Specific Coverage Requirements: Specific insurance requirements are contained in Section 0400, Supplemental Purchase Provisions

33. **CLAIMS**: If any claim, demand, suit, or other action is asserted against the Contractor which arises under or concerns the Contract, or which could have a material adverse affect on the Contractor's ability to perform thereunder, the Contractor shall give written notice thereof to the City within ten (10) calendar days after receipt of notice by the Contractor. Such notice to the City shall state the date of notification of any such claim, demand, suit, or other action; the names and addresses of the claimant(s); the basis thereof; and the name of each person against whom such claim is being asserted. Such notice shall be delivered personally or by mail and shall be sent to the City and to the Austin City Attorney. Personal delivery to the City Attorney shall be to City Hall, 301 West 2nd Street, 4th Floor, Austin, Texas 78701, and mail delivery shall be to P.O. Box 1088, Austin, Texas 78767.

34. **NOTICES**: Unless otherwise specified, all notices, requests, or other communications required or appropriate to be given under the Contract shall be in writing and shall be deemed delivered three (3) business days after postmarked if sent by U.S. Postal Service Certified or Registered Mail, Return Receipt Requested. Notices delivered by other means shall be deemed delivered upon receipt by the addressee. Routine communications may be made by first class mail, telefax, or other commercially accepted means. Notices to the Contractor shall be sent to the address specified in the Contractor's Offer, or at such other address as a party may notify the other in writing. Notices to the City shall be addressed to the City at P.O. Box 1088, Austin, Texas 78767 and marked to the attention of the Contract Administrator.

35. **TEXAS PUBLIC INFORMATION ACT**:

A. All material submitted by the Contractor to the City related to the Contract shall become property of the City upon receipt. Any portions of such material claimed by the Contractor to be proprietary must be clearly marked as such. Determination of the public nature of the material is subject to the Texas Public Information Act, Chapter 552, Texas Government Code.

B. In accordance with Texas Government Code Sec. 552.372, if this Contract has a stated expenditure of at least $1 million in public funds for the purchase of goods or services by the City or results in the expenditure of at least $1 million in public funds for the purchase of goods or services by the City in a fiscal year, Contractor agrees to:

i. Preserve all contracting information related to the Contract as provided by the records retention requirements in Section 17 (Audits and Records) of the Contract;

ii. Promptly provide to the City any contracting information related to the Contract that is in the custody or possession of Contractor on request of the City; and

iii. On completion of the Contract, either:

(1) Provide at no cost to the City all contracting information related to the Contract that is in the custody or possession of Contractor; or

(2) Preserve the contracting information related to the Contract as provided by the records retention requirements in Section 17 (Audits and Records) of the Contract.

C. The requirements of Subchapter J, Chapter 552, Texas Government Code, may apply to this Contract, and the Contractor agrees that the Contract can be terminated if the Contractor knowingly or intentionally fails to comply with a requirement of that Subchapter.

36. **NO WARRANTY BY CITY AGAINST INFRINGEMENTS**: The Contractor represents and warrants to the City that: (i) the Contractor shall provide the City good and indefeasible title to the Deliverables and (ii) the Deliverables supplied by the Contractor in accordance with the specifications in the Contract will not infringe, directly or contributorily, any patent, trademark, copyright, trade secret, or any other intellectual property right of any kind of any third party; that

no claims have been made by any person or entity with respect to the ownership or operation of the Deliverables and the Contractor does not know of any valid basis for any such claims. The Contractor shall, at its sole expense, defend, indemnify, and hold the City harmless from and against all liability, damages, and costs (including court costs and reasonable fees of attorneys and other professionals) arising out of or resulting from: (i) any claim that the City's exercise anywhere in the world of the rights associated with the City's' ownership, and if applicable, license rights, and its use of the Deliverables infringes the intellectual property rights of any third party; or (ii) the Contractor's breach of any of Contractor's representations or warranties stated in this Contract. In the event of any such claim, the City shall have the right to monitor such claim or at its option engage its own separate counsel to act as co-counsel on the City's behalf. Further, Contractor agrees that the City's specifications regarding the Deliverables shall in no way diminish Contractor's warranties or obligations under this paragraph and the City makes no warranty that the production, development, or delivery of such Deliverables will not impact such warranties of Contractor.

37. **CONFIDENTIALITY**: In order to provide the Deliverables to the City, Contractor may require access to certain of the City's and/or its licensors' confidential information (including inventions, employee information, trade secrets, confidential know-how, confidential business information, and other information which the City or its licensors consider confidential) (collectively, "Confidential Information"). Contractor acknowledges and agrees that the Confidential Information is the valuable property of the City and/or its licensors and any unauthorized use, disclosure, dissemination, or other release of the Confidential Information will substantially injure the City and/or its licensors. The Contractor (including its employees, subcontractors, agents, or representatives) agrees that it will maintain the Confidential Information in strict confidence and shall not disclose, disseminate, copy, divulge, recreate, or otherwise use the Confidential Information without the prior written consent of the City or in a manner not expressly permitted under this Agreement, unless the Confidential Information is required to be disclosed by law or an order of any court or other governmental authority with proper jurisdiction, provided the Contractor promptly notifies the City before disclosing such information so as to permit the City reasonable time to seek an appropriate protective order. The Contractor agrees to use protective measures no less stringent than the Contractor uses within its own business to protect its own most valuable information, which protective measures shall under all circumstances be at least reasonable measures to ensure the continued confidentiality of the Confidential Information.

38. **PUBLICATIONS**: All published material and written reports submitted under the Contract must be originally developed material unless otherwise specifically provided in the Contract. When material not originally developed is included in a report in any form, the source shall be identified.

39. **ADVERTISING**: The Contractor shall not advertise or publish, without the City's prior consent, the fact that the City has entered into the Contract, except to the extent required by law.

40. **NO CONTINGENT FEES**: The Contractor warrants that no person or selling agency has been employed or retained to solicit or secure the Contract upon any agreement or understanding for commission, percentage, brokerage, or contingent fee, excepting bona fide employees of bona fide established commercial or selling agencies maintained by the Contractor for the purpose of securing business. For breach or violation of this warranty, the City shall have the right, in addition to any other remedy available, to cancel the Contract without liability and to deduct from any amounts owed to the Contractor, or otherwise recover, the full amount of such commission, percentage, brokerage or contingent fee.

41. **GRATUITIES**: The City may, by written notice to the Contractor, cancel the Contract without liability if it is determined by the City that gratuities were offered or given by the Contractor or any agent or representative of the Contractor to any officer or employee of the City of Austin with a view toward securing the Contract or securing favorable treatment with respect to the awarding or amending or the making of any determinations with respect to the performing of such contract. In the event the Contract is canceled by the City pursuant to this provision, the City shall be entitled, in addition to any other rights and remedies, to recover or withhold the amount of the cost incurred by the Contractor in providing such gratuities.

42. **PROHIBITION AGAINST PERSONAL INTEREST IN CONTRACTS**: No officer, employee, independent consultant, or elected official of the City who is involved in the development, evaluation, or decision-making process of the performance of any solicitation shall have a financial interest, direct or indirect, in the Contract resulting from that solicitation. Any willful violation of this section shall constitute impropriety in office, and any officer or employee guilty

thereof shall be subject to disciplinary action up to and including dismissal. Any violation of this provision, with the knowledge, expressed or implied, of the Contractor shall render the Contract voidable by the City.

43. **INDEPENDENT CONTRACTOR**: The Contract shall not be construed as creating an employer/employee relationship, a partnership, or a joint venture. The Contractor's services shall be those of an independent contractor. The Contractor agrees and understands that the Contract does not grant any rights or privileges established for employees of the City.

44. **ASSIGNMENT-DELEGATION**: The Contract shall be binding upon and enure to the benefit of the City and the Contractor and their respective successors and assigns, provided however, that no right or interest in the Contract shall be assigned and no obligation shall be delegated by the Contractor without the prior written consent of the City. Any attempted assignment or delegation by the Contractor shall be void unless made in conformity with this paragraph. The Contract is not intended to confer rights or benefits on any person, firm or entity not a party hereto; it being the intention of the parties that there be no third party beneficiaries to the Contract.

45. **WAIVER**: No claim or right arising out of a breach of the Contract can be discharged in whole or in part by a waiver or renunciation of the claim or right unless the waiver or renunciation is supported by consideration and is in writing signed by the aggrieved party. No waiver by either the Contractor or the City of any one or more events of default by the other party shall operate as, or be construed to be, a permanent waiver of any rights or obligations under the Contract, or an express or implied acceptance of any other existing or future default or defaults, whether of a similar or different character.

46. **MODIFICATIONS**: The Contract can be modified or amended only by a writing signed by both parties. No pre-printed or similar terms on any the Contractor invoice, order or other document shall have any force or effect to change the terms, covenants, and conditions of the Contract.

47. **INTERPRETATION**: The Contract is intended by the parties as a final, complete and exclusive statement of the terms of their agreement. No course of prior dealing between the parties or course of performance or usage of the trade shall be relevant to supplement or explain any term used in the Contract. Although the Contract may have been substantially drafted by one party, it is the intent of the parties that all provisions be construed in a manner to be fair to both parties, reading no provisions more strictly against one party or the other. Whenever a term defined by the Uniform Commercial Code, as enacted by the State of Texas, is used in the Contract, the UCC definition shall control, unless otherwise defined in the Contract.

48. **DISPUTE RESOLUTION**:

    A. If a dispute arises out of or relates to the Contract, or the breach thereof, the parties agree to negotiate prior to prosecuting a suit for damages. However, this section does not prohibit the filing of a lawsuit to toll the running of a statute of limitations or to seek injunctive relief. Either party may make a written request for a meeting between representatives of each party within fourteen (14) calendar days after receipt of the request or such later period as agreed by the parties. Each party shall include, at a minimum, one (1) senior level individual with decision-making authority regarding the dispute. The purpose of this and any subsequent meeting is to attempt in good faith to negotiate a resolution of the dispute. If, within thirty (30) calendar days after such meeting, the parties have not succeeded in negotiating a resolution of the dispute, they will proceed directly to mediation as described below. Negotiation may be waived by a written agreement signed by both parties, in which event the parties may proceed directly to mediation as described below.

    B. If the efforts to resolve the dispute through negotiation fail, or the parties waive the negotiation process, the parties may select, within thirty (30) calendar days, a mediator trained in mediation skills to assist with resolution of the dispute. Should they choose this option, the City and the Contractor agree to act in good faith in the selection of the mediator and to give consideration to qualified individuals nominated to act as mediator. Nothing in the Contract prevents the parties from relying on the skills of a person who is trained in the subject matter of the dispute or a contract interpretation expert. If the parties fail to agree on a mediator within thirty (30) calendar days of initiation of the mediation process, the mediator shall be selected by the Travis County Dispute Resolution Center (DRC). The parties agree to participate in mediation in good faith for up to thirty (30) calendar days from the date of the first mediation session. The City and the Contractor will share the mediator's fees

equally and the parties will bear their own costs of participation such as fees for any consultants or attorneys they may utilize to represent them or otherwise assist them in the mediation.

49. **JURISDICTION AND VENUE**: The Contract is made under and shall be governed by the laws of the State of Texas, including, when applicable, the Uniform Commercial Code as adopted in Texas, V.T.C.A., Bus. & Comm. Code, Chapter 1, excluding any rule or principle that would refer to and apply the substantive law of another state or jurisdiction. All issues arising from this Contract shall be resolved in the courts of Travis County, Texas and the parties agree to submit to the exclusive personal jurisdiction of such courts. The foregoing, however, shall not be construed or interpreted to limit or restrict the right or ability of the City to seek and secure injunctive relief from any competent authority as contemplated herein.

50. **INVALIDITY**: The invalidity, illegality, or unenforceability of any provision of the Contract shall in no way affect the validity or enforceability of any other portion or provision of the Contract. Any void provision shall be deemed severed from the Contract and the balance of the Contract shall be construed and enforced as if the Contract did not contain the particular portion or provision held to be void. The parties further agree to reform the Contract to replace any stricken provision with a valid provision that comes as close as possible to the intent of the stricken provision. The provisions of this section shall not prevent this entire Contract from being void should a provision which is the essence of the Contract be determined to be void.

51. **HOLIDAYS:** The following holidays are observed by the City:

Holiday	Date Observed
New Year's Day	January 1
Martin Luther King, Jr.'s Birthday	Third Monday in January
President's Day	Third Monday in February
Memorial Day	Last Monday in May
Independence Day	July 4
Labor Day	First Monday in September
Veteran's Day	November 11
Thanksgiving Day	Fourth Thursday in November
Friday after Thanksgiving	Friday after Thanksgiving
Christmas Eve	December 24
Christmas Day	December 25

If a Legal Holiday falls on Saturday, it will be observed on the preceding Friday. If a Legal Holiday falls on Sunday, it will be observed on the following Monday.

52. **SURVIVABILITY OF OBLIGATIONS:** All provisions of the Contract that impose continuing obligations on the parties, including but not limited to the warranty, indemnity, and confidentiality obligations of the parties, shall survive the expiration or termination of the Contract.

53. **NON-SUSPENSION OR DEBARMENT CERTIFICATION:**

The City of Austin is prohibited from contracting with or making prime or sub-awards to parties that are suspended or debarred or whose principals are suspended or debarred from Federal, State, or City of Austin Contracts. By accepting a Contract with the City, the Vendor certifies that its firm and its principals are not currently suspended or debarred from doing business with the Federal Government, as indicated by the General Services Administration List of Parties Excluded from Federal Procurement and Non-Procurement Programs, the State of Texas, or the City of Austin.

54. **EQUAL OPPORTUNITY**

A. **Equal Employment Opportunity:** No Contractor, or Contractor's agent, shall engage in any discriminatory employment practice as defined in Chapter 5-4 of the City Code. No Offer submitted to the City shall be considered, nor any Purchase Order issued, or any Contract awarded by the City unless the Offeror has executed and filed with the City Purchasing Office a current Non-Discrimination Certification. Non-compliance with Chapter 5-4 of the City Code may result in sanctions, including termination of the contract and the Contractor's suspension or debarment from participation on future City contracts until deemed compliant with Chapter 5-4.

B. **Americans with Disabilities Act (ADA) Compliance:** No Contractor, or Contractor's agent, shall engage in any discriminatory practice against individuals with disabilities as defined in the ADA, including but not limited to: employment, accessibility to goods and services, reasonable accommodations, and effective communications.

55. **BUY AMERICAN ACT-SUPPLIES (Applicable to certain Federally funded requirements)**

A. Definitions. As used in this paragraph –

i. "Component" means an article, material, or supply incorporated directly into an end product.

ii. "Cost of components" means -

(1) For components purchased by the Contractor, the acquisition cost, including transportation costs to the place of incorporation into the end product (whether or not such costs are paid to a domestic firm), and any applicable duty (whether or not a duty-free entry certificate is issued); or

(2) For components manufactured by the Contractor, all costs associated with the manufacture of the component, including transportation costs as described in paragraph (1) of this definition, plus allocable overhead costs, but excluding profit. Cost of components does not include any costs associated with the manufacture of the end product.

iii. "Domestic end product" means-

(1) An unmanufactured end product mined or produced in the United States; or

(2) An end product manufactured in the United States, if the cost of its components mined, produced, or manufactured in the United States exceeds 50 percent of the cost of all its components. Components of foreign origin of the same class or kind as those that the agency determines are not mined, produced, or manufactured in sufficient and reasonably available commercial quantities of a satisfactory quality are treated as domestic. Scrap generated, collected, and prepared for processing in the United States is considered domestic.

iv. "End product" means those articles, materials, and supplies to be acquired under the contract for public use.

v. "Foreign end product" means an end product other than a domestic end product.

vi. "United States" means the 50 States, the District of Columbia, and outlying areas.

B. The Buy American Act (41 U.S.C. 10a - 10d) provides a preference for domestic end products for supplies acquired for use in the United States.

C. The City does not maintain a list of foreign articles that will be treated as domestic for this Contract; but will consider for approval foreign articles as domestic for this product if the articles are on a list approved by another

Governmental Agency. The Offeror shall submit documentation with their Offer demonstrating that the article is on an approved Governmental list.

D. The Contractor shall deliver only domestic end products except to the extent that it specified delivery of foreign end products in the provision of the Solicitation entitled "Buy American Act Certificate".

56. **PROHIBITION OF BOYCOTT ISRAEL VERIFICATION**

Pursuant to Texas Government Code §2270.002, the City is prohibited from contracting with any “company” for goods or services unless the following verification is included in this **Contract**.

A. For the purposes of this Section only, the terms “company” and “boycott Israel” have the meaning assigned by Texas Government Code §2270.001.

B. If the **Principal Artist** qualifies as a “company”, then the **Principal Artist** verifies that he:
   i. does not “boycott Israel”; and
   ii. will not “boycott Israel” during the term of this **Contract**.

C. The **Principal Artist’s** obligations under this Section, if any exist, will automatically cease or be reduced to the extent that the requirements of Texas Government Code Chapter 2270 are subsequently repealed, reduced, or declared unenforceable or invalid in whole or in part by any court or tribunal of competent jurisdiction or by the Texas Attorney General, without any further impact on the validity or continuity of this Contract.

CITY OF AUSTIN
PURCHASING OFFICE
SECTION 0400: SUPPLEMENTAL PURCHASE PROVISIONS
RFP 1100 MMH3010: DESIGN AND FABRICATION OF TRANSMISSION POLES

The following Supplemental Purchasing Provisions apply to this solicitation:

1. **EXPLANATIONS OR CLARIFICATIONS:** (reference paragraph 5 in Section 0200)
All requests for explanations or clarifications must be submitted in writing to Melita.Harden@austintexas.gov no later than fourteen (14) days prior to the solicitation due date.

2. **ALTERNATE OFFERS:** (reference paragraph 7A in Section 0200)
Alternate Offers will be considered.

3. **INSURANCE:** Insurance is required for this solicitation.

   A. **General Requirements:** See Section 0300, Standard Purchase Terms and Conditions, paragraph 32, entitled Insurance, for general insurance requirements.

      i. The Contractor shall provide a Certificate of Insurance as verification of coverages required below to the City at the below address prior to contract execution and within 14 calendar days after written request from the City. Failure to provide the required Certificate of Insurance may subject the Offer to disqualification from consideration for award
      ii. The Contractor shall not commence work until the required insurance is obtained and until such insurance has been reviewed by the City. Approval of insurance by the City shall not relieve or decrease the liability of the Contractor hereunder and shall not be construed to be a limitation of liability on the part of the Contractor.
      iii. The Contractor must also forward a Certificate of Insurance to the City whenever a previously identified policy period has expired, or an extension option or holdover period is exercised, as verification of continuing coverage.
      iv. The Certificate of Insurance, and updates, shall be mailed to the following address:

         City of Austin Purchasing Office
         P. O. Box 1088
         Austin, Texas 78767

         OR

         PURInsuranceCompliance@austintexas.gov

   B. **Specific Coverage Requirements:** The Contractor shall at a minimum carry insurance in the types and amounts indicated below for the duration of the Contract, including extension options and hold over periods, and during any warranty period. These insurance coverages are required minimums and are not intended to limit the responsibility or liability of the Contractor.

      i. **Worker's Compensation and Employers' Liability Insurance:** Coverage shall be consistent with statutory benefits outlined in the Texas Worker's Compensation Act (Section 401). The minimum policy limits for Employer's Liability are $1,000,000 bodily injury each accident, $1,000,000 bodily injury by disease policy limit and $1,000,000 bodily injury by disease each employee.
         (1) The Contractor's policy shall apply to the State of Texas and include these endorsements in favor of the City of Austin:
            (a) Waiver of Subrogation, Form WC420304, or equivalent coverage
            (b) Thirty (30) days Notice of Cancellation, Form WC420601, or equivalent coverage
      ii. **Commercial General Liability Insurance:** The minimum bodily injury and property damage per occurrence are $1,000,000 for coverages A (Bodily Injury and Property Damage) and B (Personal and Advertising Injury).
         (1) The policy shall contain the following provisions:
            (a) Contractual liability coverage for liability assumed under the Contract and all other Contracts related to the project.
            (b) Contractor/Subcontracted Work.

(c) Products/Completed Operations Liability for the duration of the warranty period.
(d) If the project involves digging or drilling provisions must be included that provide Explosion, Collapse, and/or Underground Coverage.

(2) The policy shall also include these endorsements in favor of the City of Austin:
(a) Waiver of Subrogation, Endorsement CG 2404, or equivalent coverage
(b) Thirty (30) days Notice of Cancellation, Endorsement CG 0205, or equivalent coverage
(c) The City of Austin listed as an additional insured, Endorsement CG 2010, or equivalent coverage

iii. **Business Automobile Liability Insurance:** The Contractor shall provide coverage for all owned, non-owned and hired vehicles with a minimum combined single limit of $1,000,000 per occurrence for bodily injury and property damage. Alternate acceptable limits are $250,000 bodily injury per person, $500,000 bodily injury per occurrence and at least $100,000 property damage liability per accident.

(1) The policy shall include these endorsements in favor of the City of Austin:
(a) Waiver of Subrogation, Endorsement CA0444, or equivalent coverage
(b) Thirty (30) days Notice of Cancellation, Endorsement CA0244, or equivalent coverage
(c) The City of Austin listed as an additional insured, Endorsement CA2048, or equivalent coverage.

C. **Endorsements:** The specific insurance coverage endorsements specified above, or their equivalents must be provided. In the event that endorsements, which are the equivalent of the required coverage, are proposed to be substituted for the required coverage, copies of the equivalent endorsements must be provided for the City's review and approval.

4. **TERM OF CONTRACT:**

A. The Contract shall be in effect for an initial term of twenty-four (24) months and may be extended thereafter for up to three (3) additional twelve (12) month periods, subject to the approval of the Contractor and the City Purchasing Officer or his designee.

B. Upon expiration of the initial term or any period of extension, the Contractor agrees to hold over under the terms and conditions of this Contract for such a period of time as is reasonably necessary for the City to re-solicit and/or complete the deliverables due under this Contract. Any hold over period will not exceed 120 calendar days unless mutually agreed on by both parties in writing.

C. Upon written notice to the Contractor from the City's Purchasing Officer or his designee and acceptance of the Contractor, the term of this contract shall be extended on the same terms and conditions for an additional period as indicated in paragraph A above.

D. Prices are firm and fixed for the first twelve (12) months. Thereafter, price changes are subject to the Economic Price Adjustment provisions of this Contract.

5. **QUANTITIES:** The quantities listed herein are estimates for the period of the Contract. The City reserves the right to purchase more or less of these quantities as may be required during the Contract term. Quantities will be as needed and specified by the City for each order. Unless specified in the solicitation, there are no minimum order quantities.

6. **DELIVERY REQUIREMENTS:**

Delivery Location:	Receiving Hours :
Austin Energy **St. Elmo Warehouse and Yard** 4411 Meinardus Drive, Building W	Monday through Friday Hours: 7:00 am to 2:00 pm

Austin, TX 78744	
Austin Energy **Kramer Warehouse and Yard** 2412 Kramer Lane, Building D Austin, TX 78758	Monday through Friday Hours:7:00 a.m. to 2:00 p.m.

A. Contractor shall provide order confirmation to the City within 72 hours of order placement.

B. The order must be shipped complete unless arrangements for partial shipments are made in advance.

C. Contractor shall provide a minimum ten (10) day notice of the date when ordered items will be ready for shipment and the manner of shipment. Such notice will include what is being shipped and instructions concerning any equipment or services required at the point of delivery to unload and care for these items.

D. Contractor shall contact Warehouse Supervisor (St Elmo) at 512-505-7632, (Kramer) at 512-505-7265 at time of shipment to schedule delivery, no less than 48 hours prior to delivery. The Contractor (or delivery personnel) shall contact Warehouse Supervisors 24 hours prior to delivery and again two hours prior to arrival on site. **Unscheduled deliveries shall not be accepted. Austin Energy is not responsible for delays in unloading if delivery is unscheduled.**

E. Shipping and Delivery

i. Hardware such as bolts, nuts and washers shall be shipped in boxes or crates. Individual boxes or crates are not to exceed 150 pounds in weight. Each box shall contain like pieces. The boxes or crates shall be of sufficient strength to resist failure during transit, storage, and subsequent handling in the field under dry or wet weather conditions.

ii. All shipping containers shall be plainly marked by stencil or a firmly fastened tag with the following information:

a. City of Austin
b. Contract No.
c. Contract Item No.
d. Type of Accessory
e. Quantity
f. Destination

iii. Pole sections shall be placed so that a minimum clearance of four inches is provided between the floor of car, barge, or truck. Pole sections shall be stacked with timber separators but not more than three tiers high. Structures shall be placed carefully to prevent shifting and damage to galvanizing or distortion of members during transit. Timber separators shall be either four by four inch (4" x 4") oak or pine. **STRUCTURES SHALL BE LOADED, UNLOADED AND SECURED WITH NYLON STRAPS.**

iv. Removable pole tops, inspection hand hole covers, and arm end caps shall be secured to appropriate steel members prior to shipping.

v. Anchor bolts and embedded sections shall be shipped in advance of above ground sections of structures.

F. Contractor shall provide, with each delivery, a Shipping or Delivery Ticket showing the description of each item, quantity, and unit price.

G. Unless requested by the City, deliveries shall not be made on City-recognized legal holidays (see paragraph 52 in Section 0300).

7. **APPROVAL DRAWINGS**

A. All drawings furnished by the Contractor must be signed and sealed by a licensed Engineer.

B. Approval Drawings

i. Three (3) copies of shop detail drawing applicable to design and/or detail (and to changes when fabricating to Austin Energy details) are to be forwarded to the applicable Project Engineer or designee for approval prior to fabrication.

ii. Drawings shall include the following general assemble information:

a. Weight schedule – basic structure components shaft extensions, anchor bolt assemblies and nuts, bolts, and washers used for assembly.
b. Bill of Material including:
c. Member mark number
d. Member dimensions
e. Member quantities
f. Bolts and nut size, length and quantities
g. Round filter size, length and quantities
h. Anchor bolt details and setting data
i. Base reactions
j. Functions

iii. The approval of a drawing by the City shall not serve as a complete check, but will indicate only that the general method of fabrication and detailing is satisfactory. Approval of the drawings by the City does not relieve the Contractor from responsibility for the correctness of the drawings. The Contractor shall, at the Contractor's sole expense, correct any errors in the drawing.

iv. One (1) set of electronic drawing files (AutoCAD 2008) shall be submitted with or prior to the delivery of the structures. PDF format or any other type other than AutoCAD 2008 will not be accepted. The electronic drawing shall be submitted on AE border. These drawings shall show all details necessary to fabricate and erect of the structure.

v. The Contractor, by accepting an order from Austin Energy, acknowledges that Austin Energy has the right to use the final shop fabrication detail in any manner beneficial to Austin Energy including use by other manufactures in the fabrication of like structures for Austin Energy.

8. **REPORTS**

A. One (1) copy of the steel mill reports covering all structures furnished in accordance with these specifications shall be submitted to the Distribution Engineer or designee prior to the start of fabrication and upon receipt of steel shipments thereafter.

B. One (1) copy of weld inspection reports covering all structures furnished in accordance with these specifications shall be submitted directly to the Project/Distribution Engineer.

9. **SERVICE BULLETINS**

A. Service Bulletins shall be provided to the Distribution Engineer or designee. The Contractor shall be responsible for providing any and all service bulletins/advisories on the material provided after delivery. This shall be an ongoing process provided by the Contractor to keep the Purchaser informed of any mechanical and/or electrical problems which may cause breakdown or failure of the structure or its components, or more importantly, jeopardize personnel working near the structure. This service shall continue beyond the standard warranty period and any fee for this service shall be included in the structure price.

10. **INVOICES and PAYMENT:** (reference paragraphs 12 and 13 in Section 0300)

A. Invoices shall contain a unique invoice number and the information required in Section 0300, paragraph 12, entitled "Invoices." Invoices received without all required information cannot be processed and will be returned to the vendor.

Invoices shall be mailed to the below address:

	City of Austin
Department	Austin Energy
Attn:	Payments Section
Address	PO Box 3546
City, State Zip Code	Austin, Texas 78764

B. The Contractor agrees to accept payment by either credit card, check or Electronic Funds Transfer (EFT) for all goods and/or services provided under the Contract. The Contractor shall factor the cost of processing credit card payments into the Offer. There shall be no additional charges, surcharges, or penalties to the City for payments made by credit card.

11. **NON-COLLUSION, NON-CONFLICT OF INTEREST, AND ANTI-LOBBYING:**

A. On June 14, 2018, the Austin City Council adopted Ordinance No. 20180614-056 replacing Chapter 2.7, Article 6 of the City Code relating to Anti-Lobbying and Procurement. The policy defined in this Code applies to Solicitations for goods and/or services requiring City Council approval under City Charter Article VII, Section 15 (Purchase Procedures). The City requires Offerors submitting Offers on this Solicitation to certify that the Offeror has not in any way directly or indirectly had communication restricted in the ordinance section 2-7-104 during the No-Lobbying Period as defined in the Ordinance. The text of the City Ordinance is posted on the Internet at: https://assets.austintexas.gov/purchase/downloads/New_ALO_Ordinance_No_20180614-056.pdf and is also included in the Solicitation, Section 0200 V2, Solicitation Instructions June 26, 2018.

12. **ECONOMIC PRICE ADJUSTMENT:**

A. **Price Adjustments:** Prices shown in this Contract shall remain firm for the first twelve (12) months of the Contract. After that, in recognition of the potential for fluctuation of the Contractor's cost, a price adjustment (increase or decrease) may be requested by either the City or the Contractor on the anniversary date of the Contract or as may otherwise be specified herein. The percentage change between the contract price and the requested price shall not exceed the percentage change between the specified index in effect on the date the solicitation closed and the most recent, non-preliminary data at the time the price adjustment is requested. The requested price adjustment shall not exceed ten percent (10%) for any single line item and in no event shall the total amount of the contract be automatically adjusted as a result of the change in one or more line items made pursuant to this provision. Prices for products or services unaffected by verifiable cost trends shall not be subject to adjustment.

B. **Effective Date:** Approved price adjustments will go into effect on the first day of the upcoming renewal period or anniversary date of contract award and remain in effect until contract expiration unless changed by subsequent amendment.

C. **Adjustments:** A request for price adjustment must be made in writing and submitted to the other Party prior to the yearly anniversary date of the Contract; adjustments may only be considered at that time unless otherwise specified herein. Requested adjustments must be solely for the purpose of accommodating changes in the Contractor's direct costs. Contractor shall provide an updated price listing once agreed to adjustment(s) have been approved by the parties.

D. **Indexes:** In most cases an index from the Bureau of Labor Standards (BLS) will be utilized; however, if there is more appropriate, industry recognized standard then that index may be selected.

i. The following definitions apply:

(1) **Base Period:** Month and year of the original contracted price (the solicitation close date).
(2) **Base Price:** Initial price quoted, proposed and/or contracted per unit of measure.
(3) **Adjusted Price:** Base Price after it has been adjusted in accordance with the applicable index change and instructions provided.
(4) **Change Factor:** The multiplier utilized to adjust the Base Price to the Adjusted Price.
(5) **Weight %:** The percent of the Base Price subject to adjustment based on an index change.

ii. **Adjustment-Request Review:** Each adjustment-request received will be reviewed and compared to changes in the index(es) identified below. Where applicable:
(1) Utilize final Compilation data instead of Preliminary data
(2) If the referenced index is no longer available shift up to the next higher category index.

iii. **Index Identification:** Complete table as they may apply.

Weight % or $ of Base Price: 100%	
Database Name: Producer Price Index Commodity Data	
Series ID: WPU1017	
☒ Not Seasonally Adjusted	☐ Seasonally Adjusted
Geographical Area: All	
Description of Series ID: Metal and Metal Items/Steel Mill Products	
This Index shall apply to the following items of the Bid Sheet / Cost Proposal: All	

E. **Calculation:** Price adjustment will be calculated as follows:

Single Index: Adjust the Base Price by the same factor calculated for the index change.

F. If the requested adjustment is not supported by the referenced index, the City, at its sole discretion, may consider approving an adjustment on fully documented market increases.

13. **CONTRACT MANAGER:** The following person is designated as Contract Manager, and will act as the contact point between the City and the Contractor during the term of the Contract:

Chet Oszust Contract Compliance Specialist, Sr.
Austin Energy, Materials Control Section Town Lake Center
721 Barton Springs Road Austin, Texas 78704
Phone Number: (512) 322-6391 E-mail Address: chester.oszust@austinenergy.com

14. PROJECT ENGINEERS

A. Transmission Engineer
David Sloan
Kramer Service Center
2526 Kramer Lane
Austin, Texas 78758
Office: 512-505-7115
Email: david.sloan@austinenergy.com

*Note: The above listed Contract Manager is not the authorized Contact Person for purposes of the **NON-COLLUSION, NON-CONFLICT OF INTEREST, AND ANTI-LOBBYING Provision** of this Section; and therefore, contact with the Contract Manager is prohibited during the no contact period.

USTIN ENERGY, ELECTRIC UTILITY DEPARTMENT

PURCHASE SPECIFICATION

FOR

DESIGN AND FABRICATION OF

TRANSMISSION POLES

DATE	PREPARED BY	ISSUANCE/REVISION	APPROVAL PROCESS SUPV. / MATERIALS SUPV.
11/20/90	D. Wahl	Revision	
09/23/92	L. Pham	Revision	
10/22/92	L. Pham	Revision	
12/09/93	M. Coleman	Revision	
02/20/96	Peter Soosay	Revision	
07/18/97	David Sloan	Revision	Clint Rogas / Bill Germany
07/20/99	Peter Soosay	Revision	
12/27/99	Steven Booher	Revision	Steven Booher / Allen Bearden
7/03/02	L. Pham	Revision	
06/29/07	Peter G. Soosay	Revision	
07/11/08	J. Gauthier	Revision	David Sloan
07/30/08	J. Gauthier	Revision	David Sloan
09/28/11	J. Gauthier	Revision	David Sloan
05/23/13	J. Gauthier	Revision	David Sloan
05/16/14	J. Gauthier	Revision	David Sloan
07/02/19	E. Cliggott-Perlt	Revision	Scott Walton

This document has been digitally signed and sealed by the PE whose seal appears to the left. To authenticate the digital seal, refer to the original electronic document.

7/22/19

TABLE OF CONTENTS

1.0 SCOPE AND CLASSIFICATION

- 1.1 Scope
- 1.2 Classification

2.0 APPLICABLE STANDARDS

3.0 PHYSICAL REQUIREMENTS

- 3.1 Material
- 3.2 Fabrication
- 3.3 Pole Shafts
- 3.4 Embedded Structures
- 3.5 Anchor Base Structures
- 3.6 Arms and Other Structure Attachments

4.0 GENERAL REQUIREMENTS AND INFORMATION

- 4.1 Design Loading
- 4.2 Design Files
- 4.3 Inspections
- 4.4 Deliverables

ATTACHMENT 1 – POLE LIST

ATTACHMENT 2 – POLE DRAWINGS

ATTACHMENT 3 – ADDER ITEM LIST

ATTACHMENT 4 – ADDER ITEM DRAWINGS

CITY OF AUSTIN ELECTRIC UTILITY DEPARTMENT
PURCHASE SPECIFICATION
FOR
DESIGN AND FABRICATION OF
TRANSMISSION POLES

1.0 SCOPE AND CLASSIFICATION

1.1 Scope

1.1.1 This specification sets forth the requirements for design, material, fabrication, inspection, finishing, and shipping of galvanized and self-weathering steel transmission structures.

1.1.2 The City of Austin Electric Utility Department is hereinafter referred to as Austin Energy (AE).

1.1.3 Austin Energy (AE) requires a qualified Fabricator to supply transmission structures. The structures shall be poles made of either galvanized steel or self-weathering steel. The poles shall be symmetrical about the transverse and longitudinal axis, with a gradual and constant taper.

1.1.4 The term “Engineer” refers to the Project Engineer for Austin Energy or their designated representative.

1.1.5 The term “Fabricator” refers to the party selected to design, fabricate, and furnish the product. Fabricator shall also have the same meaning as Contractor as defined in the Standard Purchase Definitions (Section 0100).

1.2 Classification

1.2.1 Attachments 1, 2, 3 & 4 further define the design requirements for transmission structures.

2.0 APPLICABLE STANDARDS

Reference to standard specifications shall be the latest revision of such specifications with abbreviations as listed below:

AISC	-	American Institute of Steel Construction
ANSI	-	American National Standards Institute
ASCE	-	American Society of Civil Engineers
ASME	-	American Society of Mechanical Engineers
ASNT	-	American Society of Non-Destructive Testing
ASTM	-	American Society of Testing and Materials
AWS	-	American Welding Society
NEMA	-	National Electrical Manufacturers Association
NESC	-	National Electrical Safety Code
SSPC	-	Steel Structures Painting Council

3.0 PHYSICAL REQUIREMENTS

3.1 Material

3.1.1 All material used in the structure shall have a minimum yield strength equal to or greater than the value used in the design calculations.

3.1.2 Rolled shapes and plate shall comply with the latest edition of the following ASTM specifications:

Carbon steel	A 36
High strength carbon steel	A 440
High strength low alloy steel	A 242
	A 441
	A 572
	A 633
	A 36 Modified
Self-Weathering	A 871
	A 588

3.1.3 Structural Plate material shall be mill-certified to meet an impact of 15 ft-lb. at -20° F in the longitudinal direction using the Charpy V-Notch Impact Test in accordance with ASTM A 673.There shall be an average of three (3) tests with no one test below 10ft-lb. The location of the test samples shall be in accordance with ASTM A673.

3.1.4 Assembly bolts shall be A 394, A 325, A 449, A 490 or A 354. Bolts and nuts shall have a class 2 tolerance as defined by ANSI No. B1.1 after galvanizing or self-weathering finish has formed.

3.1.5 Other materials may be used if approved in writing by AE Engineer prior to material procurement

3.2 Fabrication

3.2.1 Fabrication shall be in accordance with AISC specifications and shall be equal to the best shop practice of modern steel fabricating shops.

3.2.2 Welding

A. Design of all joints or seams and all welding procedures shall be in accordance with Structural Welding Code AWS D1.1, including the latest addenda.

B. Welders shall be qualified on all welds used during the fabrication process in accordance with AWS D1.1.

C. Upon request by the Engineer, Fabricator shall provide weld design calculations for arms, baseplates, and other joint details.

3.2.3 Quality and Finish

A. Option “A” - Hot-dipped galvanized

1. Steel shall be hot dipped galvanized inside and outside after fabrication. The galvanizing shall be in accordance with ASTM Specification A 123. Precautions shall be taken against hydrogen embrittlement in accordance with ASTM Specification A 143. Double dipping is not allowed. Sections using metalizing shall be sealed to prevent internal corrosion.

2. Galvanized structures shall be free and clear of acid drops, tear drop edges, flaking zinc, rough appearance, trapped slag, holes covered with zinc membrane and in general

shall be smooth, clean, attractive in appearance and unscarred when received. Pieces having galvanizing which do not meet these requirements, in the sole opinion of the AE Engineer, shall be rejected.

B. Option “B” - Self-weathering

1. Steel surfaces shall be blast cleaned after fabrication in accordance with the Steel Structures Painting Council’s Surface Preparation Specification SP6, commercial finish, to ensure rapid and uniform weathering.

2. Self-weathering structures shall have an initial formation of patina that is consistent in thickness and appearance. Pole sections shall be sealed to eliminate the need for internal corrosion protection. Pieces, which do not meet these requirements, in the sole opinion of the Engineer, shall be rejected.

C. All punching and drilling shall conform to the following:

1. Bolt holes shall be punched, drilled or oxygen cut for tubular steel poles.

2. The finished diameter of the bolt hole shall be 1/8" larger than the nominal bolt diameter.

3. Finished edges shall be clean cut and free from burrs and chips. Roughness of oxygen-cut surfaces shall not be greater than that defined by AWS D1.1.

4. All holes shall be cylindrical and perpendicular to the principal surface. Slotting of mispunched holes is not permitted.

5. Plugging and welding mispunched holes shall be kept to a minimum. Pieces that, in the opinion of the Engineer, have excessive plugs and welds will be rejected.

6. All holes drilled in the pole wall shall be plugged by an insert capable of remaining in place for the life of the pole.

7. Connections shall be arranged to minimize the eccentricity of loading on the member.

3.2.4 Identification Marking

A. Each piece of structure, except the bottom piece, shall have two 3”x5” steel name plates permanently affixed five (5) feet above the base. The bottom piece of structure shall have the steel name plates permanently affixed five (5) feet above the groundline. The plates shall be located and stamped according to the attached drawing.

B. Each piece of structure shall have its unique identifier welded above each of the name plates according to the attached drawing.

C. All identification markings shall be clearly legible after galvanizing or self-weathering finish has formed.

3.2.5 Balance Point Marking

A. Each piece of structure shall have the balance point indicated by “BP”, at least three inches (3”) in height, welded onto the outside of the pole. This marking shall be placed on the same faces as the name plates if possible, or on one of the adjacent faces if the unique identifier is in the way.

3.2.6. Tolerances

A. Maximum tolerance allowed on finished work shall conform to the following:

1.	Cutting length	± 1/16"
2.	Center to center distance of end holes on a piece	± 1/16"
3.	Variation of gage lines	± 1/32"
4.	Variation of center to center spacing of a group or cluster of holes	± 1/32"
5.	Compression members shall be straight to a tolerance of 1/1000 of the total length	± 1/32"

6. All material shall be free of deformations, bends, twists, or kinks. Straightening of damaged material shall not be permitted.

B. Fabricator shall size assembly bolts without allowances for washers, unless specifically requested. All bolts shall be of the coarse thread series furnished with self locking "Ancolock" hex nuts or equivalent unless otherwise specified. All bolts shall be of such a length that they pass entirely through the nut and have a minimum projection of two complete threads. Locking of nuts shall be by both mechanical method between the mated threads of the nuts and bolts, and by the application of "Ancolock" or equivalent self-locking nuts to all assembly bolts.

C. A five (5) percent overage of bolts and self-locking nuts shall be included.

3.2.7 Modifications

A. Structures are to be fabricated in accordance with detailed drawings furnished by the Fabricator and approved by the AE Engineer.

B. For fabrication only orders, minor deviations in member layout to accommodate variations in shop practices will be permitted provided that these deviations do not materially alter the configuration of the structures and do not reduce the strength of the structures. When such deviations in member layout are made, drawings showing these deviations shall be submitted to the AE Engineer for approval and the originals of such drawings shall become the property of Austin Energy upon completion of the order.

3.3 Pole Shafts

3.3.1 Pole shafts used in the structures shall be a minimum of twelve (12) sides and tapered. Taper shall not exceed 0.5 inches per linear for foot for 60 DEGREE and 90 DEGREE poles. Taper shall not exceed 0.4 inches per linear foot for all other poles.

3.3.2 Shaft sections up to 55 feet in length shall be furnished as one piece unless otherwise specified by the Engineer.

3.3.3 Slip-jointed poles shall not have a splice joint length of less than 1 1/2 times the maximum inside diameter measured across the flats of the outer section.

3.3.4 Four (4) jacking vangs per splice joint shall be welded to opposite walls of the pole shaft in order to accommodate a hydraulic jacking device for field assembly. The jacking vangs shall:

- Be located with the other pole attachments in mind such that it is possible to lay each pole section down flat with no protrusions
- Be located as to be clear of the section overlap
- Not be less than 24 inches apart when the joint is fully telescoped.

3.3.5 The pole top deflection shall not be greater than 10% of the total pole height under full loading conditions with overloads.

3.3.6 Pole tops shall be capped with a steel plate. The steel plate shall be attached by a bolt on galvanized poles and welded on self-weathering poles. There shall be no more than 1/8” of protrusion of the sealer plate beyond the circumference of the pole faces.

3.3.7 Where handling slots/lifting holes are used, they shall be fabricated in accordance with the attached drawing.

3.3.8 Flange bolted poles shall be connected with bolts and nuts. All Thread or anything similar is not an acceptable substitute.

3.3.9 The top piece of each structure shall have two ground clamps consisting of 1/2 inch hex nuts welded over 5/8 inch holes at the same level as the top attachment. The two ground clamps shall be on opposite sides of the pole from each other.

3.3.10 The max splice length shall be indicated by a weld mark.

3.3.11 For structures with post brackets, a ground clamp consisting of a 1/2 inch hex nut welded over a 5/8 inch hole shall be located 6 feet below the bottom post bracket. If the location of this ground clamp conflicts with the splice, the ground clamp shall be moved such that there is no conflict.

3.5.9 Pole drawings shall include a 3D rendering.

3.4 Embedded Structures

3.4.1 Embedded structures shall be designed so that the embedded section is a minimum of ten (10) percent of the overall pole length plus an additional four (4) feet.

3.4.2 Four (4) feet below grade and two (2) feet above grade of the embedded structure shall be coated with an AE Engineer approved coating that protects the coated section from corrosion for the life of the pole. This shall be the coating practice for all galvanized and self-weathering pole shafts. Please refer to attached drawing. This coating shall be UV resistant. If it is not, another UV resistant coating shall be applied over the top of the corrosion protection. The 6’ of corrosion and UV resistant coating is to be included in the price of all direct embedded structures.

3.4.3 The corrosion protection coating shall be Corrocote II Classic PNT 215A and PNT 215B, with a minimum thickness of 16 mils. Another coating capable of protecting the coated section from corrosion for the life of the pole shall be allowed if the AE Engineer approves its use.

3.4.4 All embedded poles shall have provisions for two (2) bolted ground clamps consisting of 1/2 inch hex-nuts welded over 5/8 inch holes located twenty-one (21) inches above and below groundline. Both nuts shall be located on the same pole flat.

3.4.5 Galvanized and Self-Weathering poles shall include a butt plate of at least 1/4 inch thickness. The butt plate on Self-Weathering poles shall completely enclose the shaft base. The butt plate on Galvanized poles shall be detailed to allow adequate drainage during galvanizing.

3.4.6 All embedded poles shall include a plate steel ground sleeve of at least 3/16 inch thickness

.

3.5 Anchor Base Structures

3.5.1 Anchor bolt holes in the base plates shall be of a diameter within the range of 3/8 inch to 1/2 inch larger than the anchor bolts with which they are used.

3.5.2 Anchor bolts shall consist of deformed reinforcing bar in compliance with ASTM Specification A-36 or A-615, weld quality, with the top 12 inches of the bolt threaded according to ANSI-UNC-2A classification. The bolts shall resist the design load of the structure at the yield point of the bolts. Bolt lengths shall be computed in accordance with of ACI 318, using a 28-day compressive strength of 3000 pounds per square inch. At least 18 inches of threaded ends of the bolts shall be hot dipped galvanized in accordance with ASTM A-123. Each bolt shall be furnished with 2 galvanized hex-nuts whose thread tolerance is such that they will not fail under design loading of the structure.

3.5.3 Anchor bolts shall be preclustered to provide for placement in the foundation as a unit. Unless furnished as part of the cluster assembly, steel anchor bolt setting templates shall be furnished for each base plate configuration except that multiple templates shall be furnished when two (2) or more poles or structures require the same template. Templates shall be permanently identified with a build number and orientation marks aligned on the bisector. Top templates shall have two clearly stamped nameplates (minimum text height of one inch) affixed by weld. The two nameplates shall be on opposite sides of the template.

3.5.4 The bottom piece of each anchor bolted structure shall include a 7 inch x 9 inch inspection hand hole approximately 12 inches above the base plate per the attached drawing. One grounding vang is to be installed 2” to either side of the inspection hand hole per the attached drawing.

3.5.6 All anchor bolt holes shall be equally spaced around the bolt circle. Per ACI 336, clear cover between anchor bolts shall not be less than 4 inches.

3.5.7 Every base plate shall be notched or otherwise marked on the inside bisector.

3.5.8 Anchor bolts shall not have an unsupported length greater than 15 feet. Middle templates shall be added to the cage as necessary.

3.6 Arms and Other Structure Attachments

3.6.1 All pole attachments shall be designed per the attached drawings.

3.6.2 Arm and post insulator attachments shall be designed by the Fabricator so that the arm or insulator will fail before the failure of the structure or the attachment. All attachments to the poles shall use vang plates or arm brackets. All Davit arm attachments shall be interchangeable. All static arm attachments shall be interchangeable.

3.6.3 All non-ring vangs for the attachment of shield wire, swing angle, braced post and dead-end insulators, and guys shall be through vangs welded to both walls of poles.

3.6.4 All pole shafts shall include provisions for the use of Hubbell J600007 detachable steps or approved equivalent unless otherwise noted. The detachable steps shall not be furnished with the structure.

A. The lowest step attachments shall be located on pole faces A and B at 12 inches above the pole base plate or groundline. Additional step attachments shall be spaced 30 inches on center (15 inches between consecutive steps alternating between faces A & B).

B. Pole faces A & B shall be 90 degrees to each other except where arc distance between faces exceeds 24 inches.

C. Additional working step attachments shall be located at 4 and 6 feet below each static wire, conductor, and distribution attachment such that circumferential distance (at the pole face) does not exceed 18” between steps.

3.6.5 All parts bearing the same identification marking shall be interchangeable.

4.0 GENERAL REQUIREMENTS AND INFORMATION

4.1 Design Loading

4.1.1 All pole shafts, attachments and arms shall be designed to withstand the loading shown on the attached load tree drawings, without the yielding or failure of any part of the structure. These loads were derived from the National Electric Safety Code (NESC), latest edition, Heavy Loading District and include overload factors.

A. Base plates shall be designed to exceed the moment capacity of the pole shaft.

B. Loads assume (2) 795MCM Drake per phase at 12,480lbs per conductor and (1) 0.637" diameter shield wire at 7,000lbs.

C. Loads assume 500' wind and 600' weight spans for 90° shafts and 600' wind and 700' weight spans for all other shafts and all arms.

4.1.2 The Fabricator is responsible for all design and loading calculations for the requirements described herein and in all Attachments. All design calculations and drawings shall be sealed by the Fabricator's registered Texas Professional Engineer.

4.1.3 Preliminary drawings shall include structure configuration, dimensions, weights and stress diagrams, and computer printout of maximum loading and loading conditions.

4.1.4 When requested by Austin Energy, the Fabricator shall include Distribution Arm loads as shown on attached COA-AE Drawings to design poles.

4.2 Design Files

4.2.1 The Fabricator shall submit designs for all contract items including poles and adders (davit arms and cross arms only). All design data shall be in the form of PLS-POLE component files. This will include the following files:

Steel Pole Properties file (.spp)
Tubular Steel Davit Arms properties file (.tdv)
Tubular Steel Cross Arms properties file (.xtm)

4.2.2 Base plates of anchor bolted structures shall be included in the Steel Pole Properties file. No base plate shall fail prior to the shaft when analyzed using ASCE/SEI 48-11 in PLS-POLE or PLS-CADD. If a bend line length override is necessary to comply with that requirement it shall be included in the Steel Pole Properties file.

4.2.3 Any curvature or other variation from a straight davit arm shall be reflected in the Geometry table of the Tubular Steel Davit Arm Properties file for PLS-POLE.

4.3 Inspections

4.3.1 The Fabricator's inspection personnel performing nondestructive examination (other than visual) shall be qualified in accordance with ASNT Practice No. SNT-TC-1A.

4.3.2 All full penetration welds shall undergo non-destructive weld inspection, either ultrasonic (UT) or radiographic (RT), by a 3rd party firm employed by the Fabricator.

A. Testing procedure shall reflect the procedure outlined in AWS D1.1./D1.1M, Section 6.27.1

B. 3rd Party Inspectors shall be qualified to AWS QCI

C. A report of the 3rd party inspection shall be delivered with the final fabrication drawings

D. For galvanized members with large T-Joint Connections, such as base plates, flange plates, etc., ultrasonic (UT) nondestructive weld testing shall be performed on 100% of joints, not only before, but also after galvanizing to ensure that no cracks have developed. Any indications found with this test shall be ground smooth and inspected with magnetic particle methods. Any positive indications after this inspection shall be repaired and re-inspected, and the finish shall be repaired in accordance with requirements of the appropriate ASTM standard. This requirement may be waived with written consent of the AE Project Engineer.

4.4 Deliverables

4.4.1 The Fabricator shall submit the following Deliverables with each Delivery Order:

A. Approval drawings
B. Test reports
C. Inspection Reports
D. Final structure drawings (including fabrication drawings)

ATTACHMENT 1

POLE LIST

Pole Type: TANGENT					
Pole Length (ft)	Direct Embed	Embedment Length (ft)	Restricted Groundline Diameter (in)	Anchor Bolt	Restricted Base Diameter (in)
70	✓	11	-	✓	-
75	✓	11.5	-	✓	-
80	✓	12	-	✓	-
85	✓	12.5	-	✓	-
90	✓	13	-	✓	-
95	✓	13.5	-	✓	-
100	✓	14	-	✓	-
105	✓	14.5	-	✓	-
110	✓	15	-	✓	-
115	✓	15.5	-	✓	-
120	✓	16	-	✓	-
125	✓	16.5	-	✓	-
130	✓	17	-	✓	-
135	✓	17.5	-	✓	-
140	✓	18	-	✓	-
145	✓	18.5	-	✓	-
150	✓	19	-	✓	-

Pole Type: 5 DEGREE					
Pole Length (ft)	Direct Embed	Embedment Length (ft)	Restricted Groundline Diameter (in)	Anchor Bolt	Restricted Base Diameter (in)
70	✓	11	-	✓	-
75	✓	11.5	-	✓	-
80	✓	12	-	✓	-
85	✓	12.5	-	✓	-
90	✓	13	-	✓	-
95	✓	13.5	-	✓	-
100	✓	14	-	✓	-
105	✓	14.5	-	✓	-
110	✓	15	-	✓	-
115	✓	15.5	-	✓	-
120	✓	16	-	✓	-
125	✓	16.5	-	✓	-
130	✓	17	-	✓	-
135	✓	17.5	-	✓	-
140	✓	18	-	✓	-
145	✓	18.5	-	✓	-
150	✓	19	-	✓	-

Pole Type: 10 DEGREE					
Pole Length (ft)	Direct Embed	Embedment Length (ft)	Restricted Groundline Diameter (in)	Anchor Bolt	Restricted Base Diameter (in)
70	✓	11	-	✓	-
75	✓	11.5	-	✓	-
80	✓	12	-	✓	-
85	✓	12.5	-	✓	-
90	✓	13	-	✓	-
95	✓	13.5	-	✓	-
100	✓	14	-	✓	-
105	✓	14.5	-	✓	-
110	✓	15	-	✓	-
115	✓	15.5	-	✓	-
120	✓	16	-	✓	-
125	✓	16.5	-	✓	-
130	✓	17	-	✓	-
135	✓	17.5	-	✓	-
140	✓	18	-	✓	-
145	✓	18.5	-	✓	-
150	✓	19	-	✓	-

Pole Type: 20 DEGREE					
Pole Length (ft)	Direct Embed	Embedment Length (ft)	Restricted Groundline Diameter (in)	Anchor Bolt	Restricted Base Diameter (in)
70	×	NA	NA	✓	-
75	×	NA	NA	✓	-
80	×	NA	NA	✓	-
85	×	NA	NA	✓	-
90	×	NA	NA	✓	-
95	×	NA	NA	✓	-
100	×	NA	NA	✓	-
105	×	NA	NA	✓	-
110	×	NA	NA	✓	-
115	×	NA	NA	✓	-
120	×	NA	NA	✓	-
125	×	NA	NA	✓	-
130	×	NA	NA	✓	-
135	×	NA	NA	✓	-
140	×	NA	NA	✓	-
145	×	NA	NA	✓	-
150	×	NA	NA	✓	-

Pole Type: 30 DEGREE					
Pole Length (ft)	Direct Embed	Embedment Length (ft)	Restricted Groundline Diameter (in)	Anchor Bolt	Restricted Base Diameter (in)
70	×	NA	NA	✓	-
75	×	NA	NA	✓	-
80	×	NA	NA	✓	-
85	×	NA	NA	✓	-
90	×	NA	NA	✓	-
95	×	NA	NA	✓	-
100	×	NA	NA	✓	-
105	×	NA	NA	✓	-
110	×	NA	NA	✓	-
115	×	NA	NA	✓	-
120	×	NA	NA	✓	-
125	×	NA	NA	✓	-
130	×	NA	NA	✓	-
135	×	NA	NA	✓	-
140	×	NA	NA	✓	-
145	×	NA	NA	✓	-
150	×	NA	NA	✓	-

Pole Type: 60 DEGREE					
Pole Length (ft)	Direct Embed	Embedment Length (ft)	Restricted Groundline Diameter (in)	Anchor Bolt	Restricted Base Diameter (in)
70	×	NA	NA	✓	-
75	×	NA	NA	✓	-
80	×	NA	NA	✓	-
85	×	NA	NA	✓	-
90	×	NA	NA	✓	-
95	×	NA	NA	✓	-
100	×	NA	NA	✓	-
105	×	NA	NA	✓	-
110	×	NA	NA	✓	-
115	×	NA	NA	✓	-
120	×	NA	NA	✓	-
125	×	NA	NA	✓	-
130	×	NA	NA	✓	-
135	×	NA	NA	✓	-
140	×	NA	NA	✓	-
145	×	NA	NA	✓	-
150	×	NA	NA	✓	-

Pole Type: 90 DEGREE					
Pole Length (ft)	Direct Embed	Embedment Length (ft)	Restricted Groundline Diameter (in)	Anchor Bolt	Restricted Base Diameter (in)
70	×	NA	NA	✓	-
75	×	NA	NA	✓	-
80	×	NA	NA	✓	-
85	×	NA	NA	✓	-
90	×	NA	NA	✓	-
95	×	NA	NA	✓	-
100	×	NA	NA	✓	-
105	×	NA	NA	✓	-
110	×	NA	NA	✓	-
115	×	NA	NA	✓	-
120	×	NA	NA	✓	-
125	×	NA	NA	✓	-
130	×	NA	NA	✓	-
135	×	NA	NA	✓	-
140	×	NA	NA	✓	-
145	×	NA	NA	✓	-
150	×	NA	NA	✓	-
Pole Type: GUYED STUB					
Pole Length (ft)	Direct Embed	Embedment Length (ft)	Restricted Groundline Diameter (in)	Anchor Bolt	Restricted Base Diameter (in)
30	×	NA	NA	✓	-
35	×	NA	NA	✓	-
40	×	NA	NA	✓	-
45	×	NA	NA	✓	-
50	×	NA	NA	✓	-
Pole Type: UNGUYED STUB					
Pole Length (ft)	Direct Embed	Embedment Length (ft)	Restricted Groundline Diameter (in)	Anchor Bolt	Restricted Base Diameter (in)
30	×	NA	NA	✓	-
35	×	NA	NA	✓	-
40	×	NA	NA	✓	-
45	×	NA	NA	✓	-
50	×	NA	NA	✓	-

ATTACHMENT 2

POLE DRAWINGS

NAME PLATE INFORMATION

AUSTIN ENERGY
NAME OF MANUFACTURER DATE OF MANUFACTURER (MM/YY)
HEIGHT (i.e. XXXFT) TYPE (i.e. 30DEG or TAN or LD6)
LINE ANGLE (if applicable)
PROJECT # – TUBE #
INVENTORY ITEM NUMBER (i.e. MAX# 12345)
TUBE WEIGHT (i.e. TUBE XXXLBS)
TOTAL STRUCTURE WEIGHT (i.e. STR XXXLBS)

STEEL PLATE

UNIQUE IDENTIFIER LOCATION

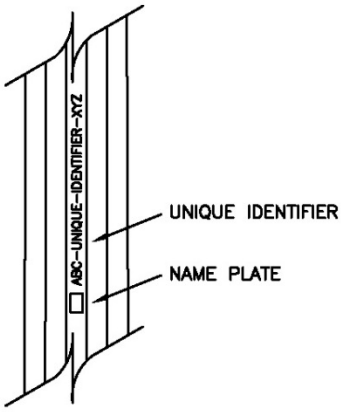

NAME PLATE LOCATION

Orientation for
Steel Polygon Pole

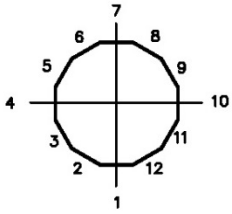

OUTSIDE BISECTOR

OUTSIDE BISECTOR

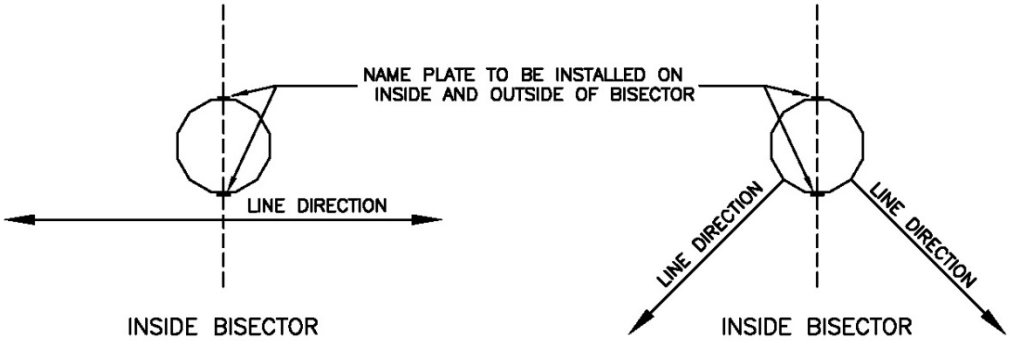

INSIDE BISECTOR

INSIDE BISECTOR

TANGENT – TOP VIEW

DEAD END – TOP VIEW

NOTE:
POLE TO BE ORIENTED SUCH THAT NAME PLATE AND FACES ON WHICH NAME IS INSTALLED IS PERPENDICULAR TO BISECTOR (1 AND 7)

AUSTIN ENERGY POWER DELIVERY	TITLE: NAME PLATE INFORMATION, PLACEMENT & UNIQUE ID	DRAWN: JJG	SCALE: N.T.S.
		CHECKED: TAC	FILENAME: E0758-NMPLT.dwg
		DATE: 5/2/14	DRAWING NO.: E0758-NMPLT

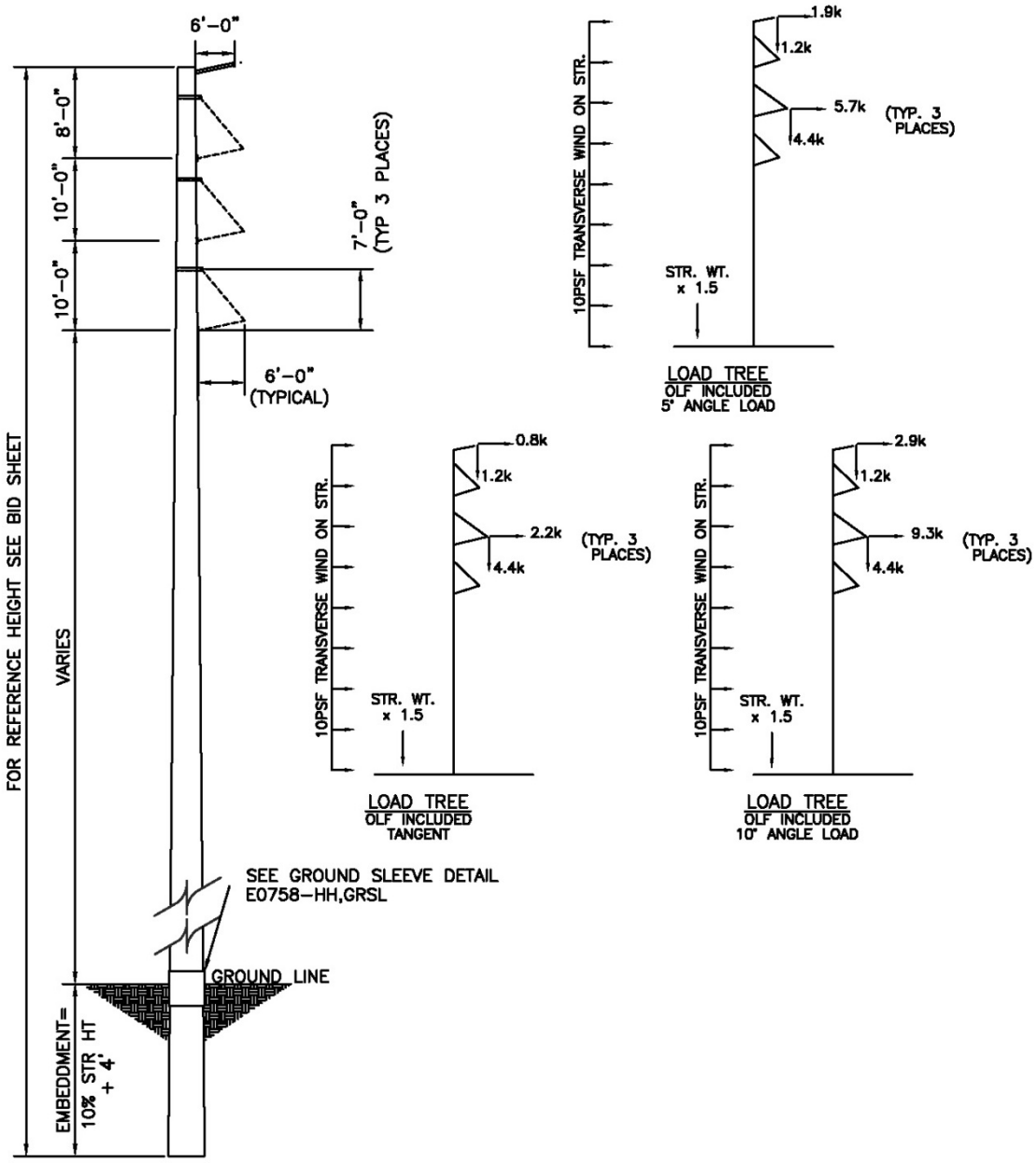

AUSTIN ENERGY POWER DELIVERY	TITLE: TANGENT & LIGHT ANGLE DIRECT EMBEDDED	DRAWN: JJG	SCALE N.T.S.
		CHECKED: TAC	FILENAME: E0758-TAN.LA.DE.dwg
		DATE: 9/27/11	DRAWING NO.: E0758-TAN.LA.DE

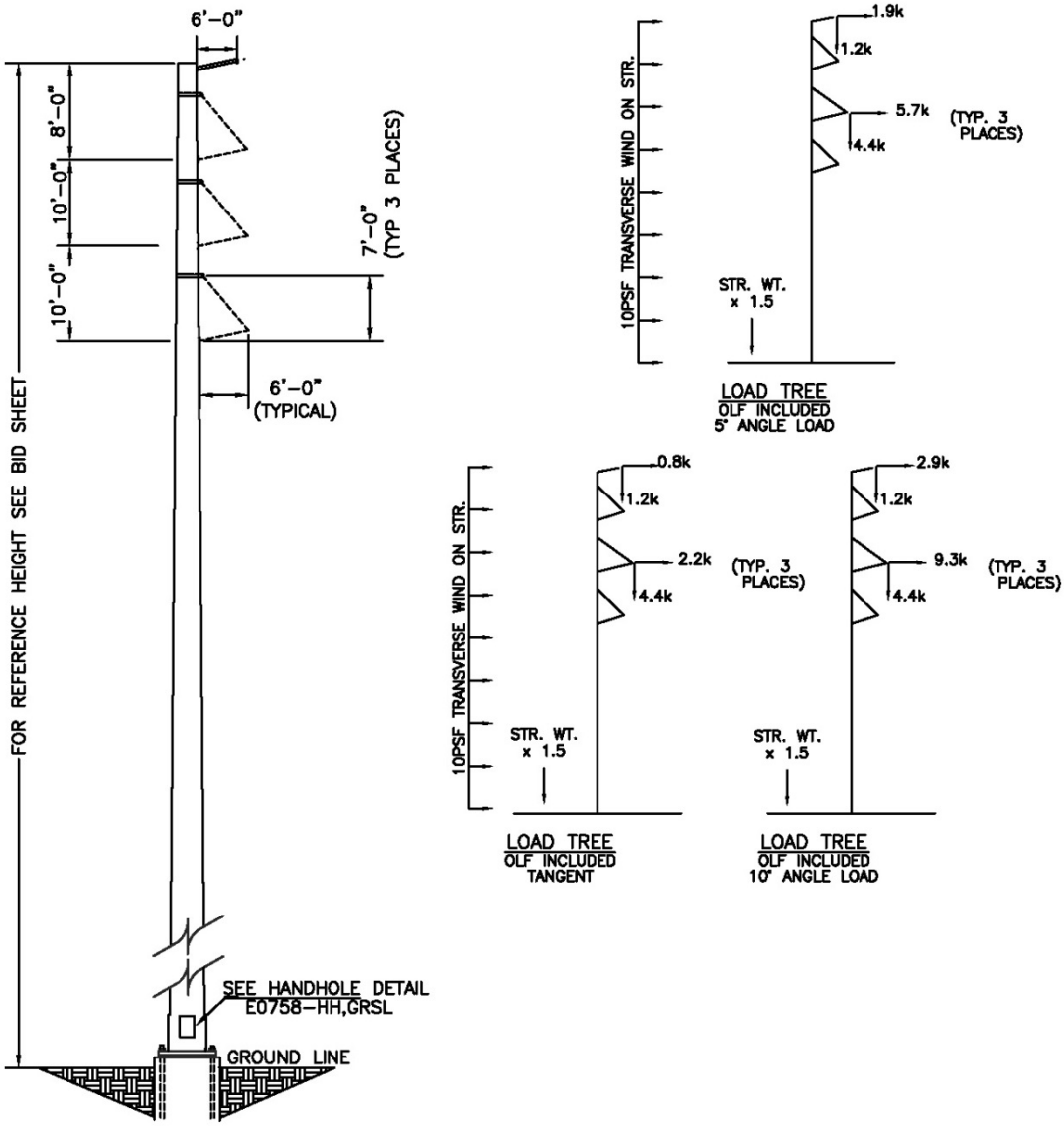

AUSTIN ENERGY POWER DELIVERY	TITLE: TANGENT & LIGHT ANGLE ANCHOR BOLTED	DRAWN: JJG	SCALE N.T.S.
		CHECKED: TAC	FILENAME: E0758-TAN.LA.AB.dwg
		DATE: 10/18/11	DRAWING NO.: E0758-TAN.LA.AB

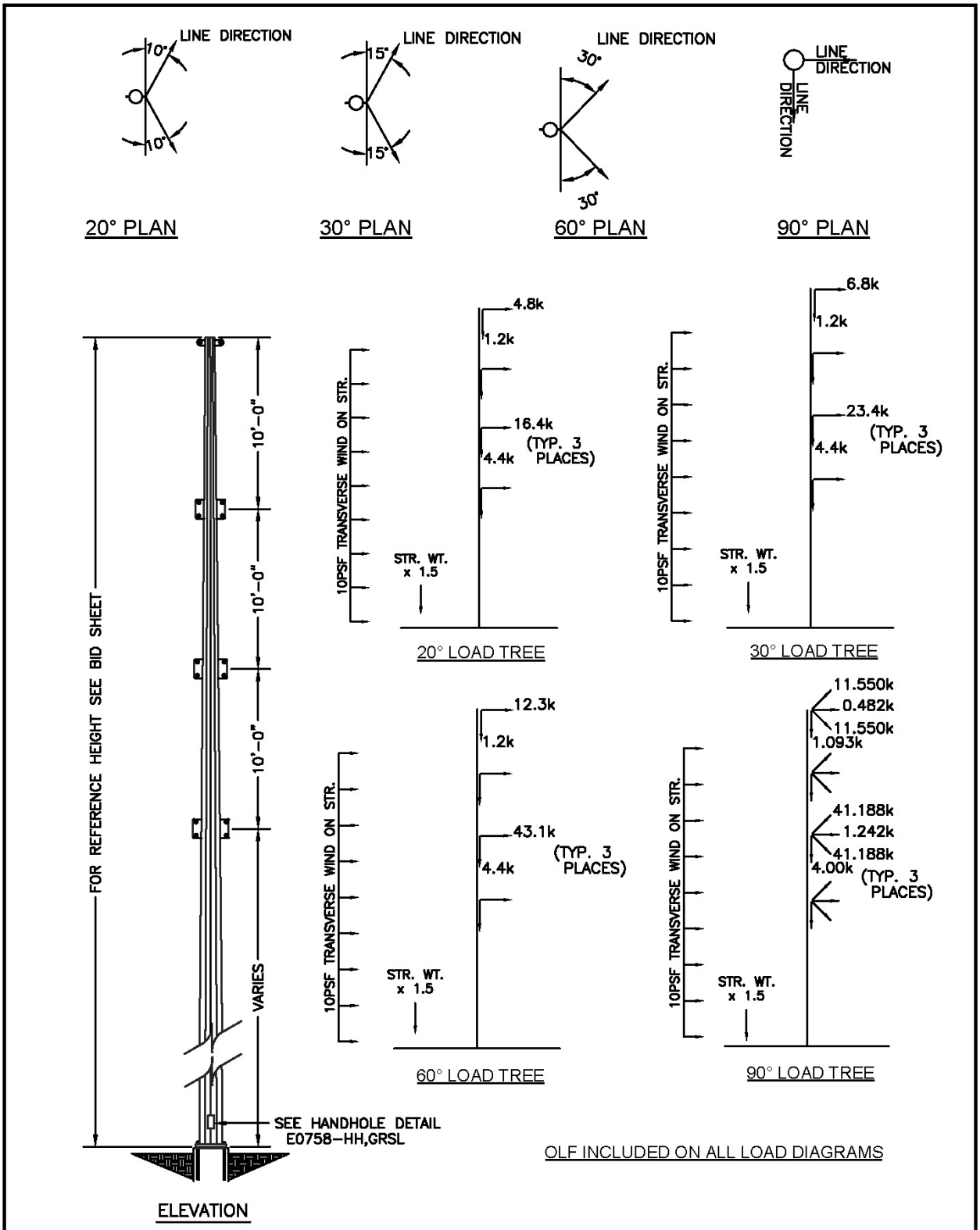

AUSTIN ENERGY POWER DELIVERY	TITLE: 20°,30°,60°,90° POLES ANCHOR BOLTED	DRAWN: ECP	SCALE: N.T.S.
		CHECKED: SJW	FILENAME: E0758-PS.dwg
		DATE: 07/19/19	DRAWING NO.: E0758-PS

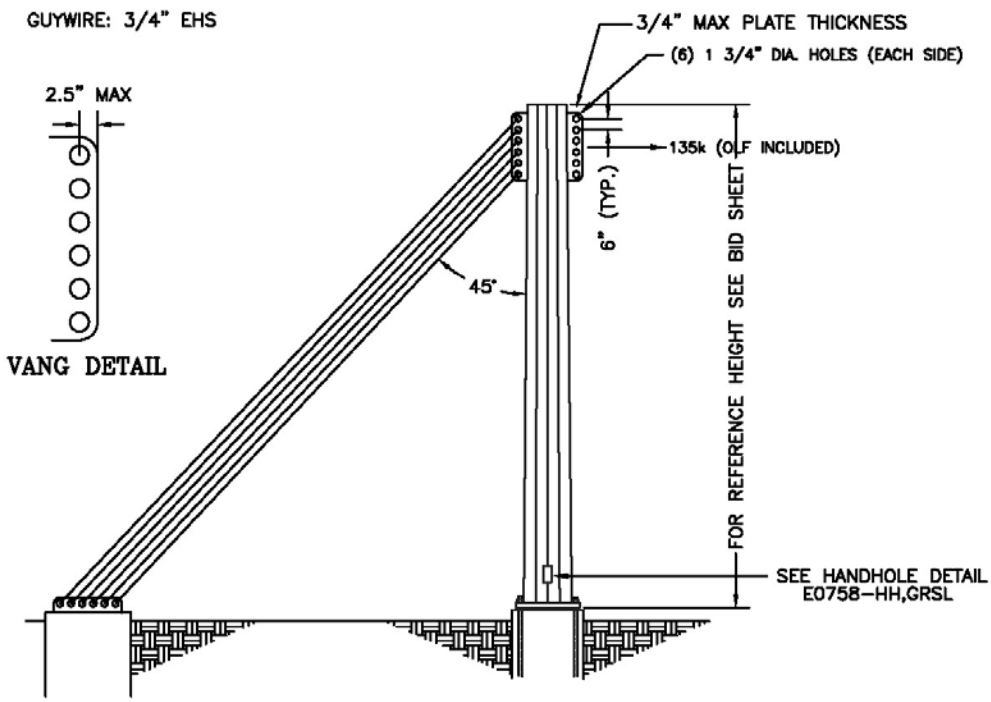

GUYED STUB POLE

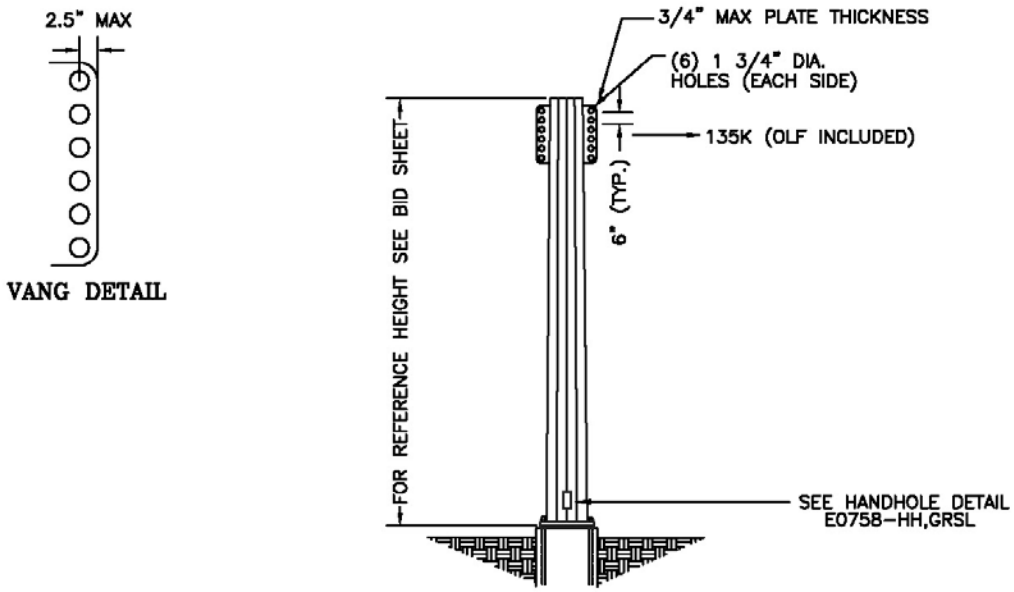

UNGUYED STUB POLE

AUSTIN ENERGY POWER DELIVERY	TITLE: STUB POLES GUYED AND UNGUYED	DRAWN: JJG	SCALE N.T.S.	
		CHECKED: TAC	FILENAME: E0758-STUB.dwg	
		DATE: 10/18/11	DRAWING NO.: E0758-STUB	

ATTACHMENT 3

ADDER ITEM LIST

ITEM	LENGTH(S)	REF. DRAWING
Conductor Dead End Thru Vang	NA	E0758-VNGS,PBR
Static DE Thru Vang	NA	E0758-VNGS,PBR
Post Insulator Bracket	NA	E0758-VNGS,PBR
Single Tangent Thru Vang	NA	E0758-VNGS,PBR
Distribution Arm	4.5'	E0758-DIST
Davit Arm Tangent	4',6',8',10',12',14'&16'	E0758-TDVT
Davit Arm Dead End, Single & Bund. Cond.	4', 6', 8' & 10'	E0758-DEDVT
Davit Arm Static Tangent & Dead End	4',6',8',10' & 12'	E0758-STARM
V-String Arm	10',17'	E0758-VSARM
Drop Bracket	NA	E0758-DB,TX
Tangent Cross Arm	10'	E0758-DB,TX
Dead End Cross Arm	20', 30' & 40'	E0758-DEX
Inspection Hand Hole	NA	E0758-HH,GRSL
Ground Sleeve	NA	E0758-HH,GRSL
Lifting Holes	NA	E0758-LIFT
Embedded Detail	NA	E0758-EMBDET
Anchor Beam	NA	E0758-TH-OA-40
Ring Vangs	NA	E0758-RV

ATTACHMENT 4

ADDER ITEM DRAWINGS

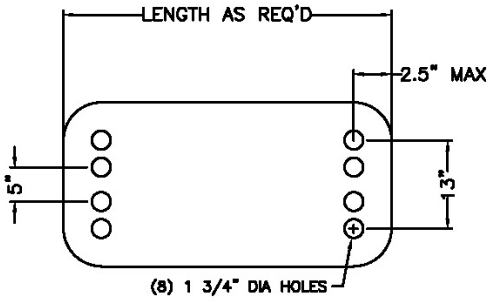

MAXIMUM, 3/4" PLATE THICKNESS
MINIMUM, 3" HOLE CENTER TO POLE FACE

CONDUCTOR DEAD END THRU VANG
DETAIL 1

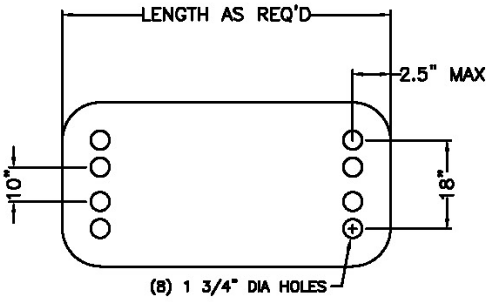

MAXIMUM, 3/4" PLATE THICKNESS
MINIMUM, 3" HOLE CENTER TO POLE FACE

345kV COND DEAD END THRU VANG
DETAIL 2

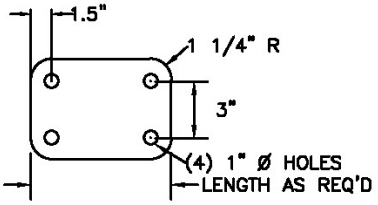

MAXIMUM, 3/4" PLATE THICKNESS
MINIMUM, 3" HOLE CENTER TO POLE FACE

STATIC DE THRU VANG
DETAIL 3

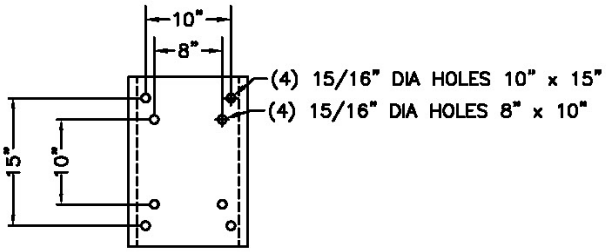

POST INSULATOR BRACKET
DETAIL 4

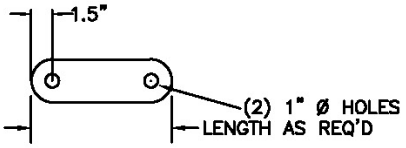

MAXIMUM, 3/4" PLATE THICKNESS
MINIMUM, 3" HOLE CENTER TO POLE FACE

SINGLE TANGENT THRU VANG
DETAIL 5

AUSTIN ENERGY POWER DELIVERY	TITLE: POLE SUPPLY AGREEMENT ADDER DETAILS	DRAWN: ECP	SCALE: NTS
		CHECKED:	FILENAME: E0758-VNGS,PBR.dwg
		DATE: 7/19/19	DRAWING NO.: E0758-VNGS,PBR

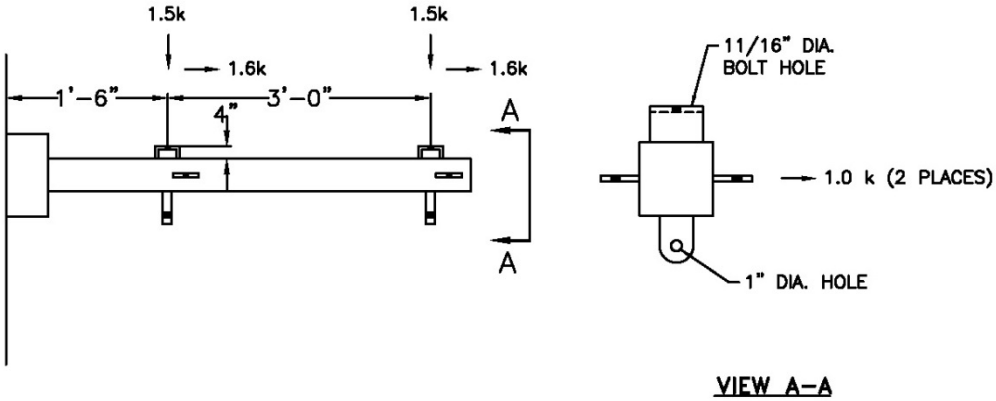

DISTRIBUTION ARM
DETAIL 1

DESIGN DATA:

NESC HEAVY

WIND SPAN = 300'
WEIGHT SPAN = 400'
LINE ANGLE = 0° – 10°

PRIMARY: 795 MCM AAC
ARBUTUS
MDT=5500 LBS.

NEUTRAL: 4/0 AAC
OXLIP
MDT=1500 LBS.

AUSTIN ENERGY POWER DELIVERY	TITLE: DISTRIBUTION ARM	DRAWN: JJG	SCALE: NTS
		CHECKED:	FILENAME: E0758-DIST.dwg
		DATE: 7/11/08	DRAWING NO.: E0758-DIST

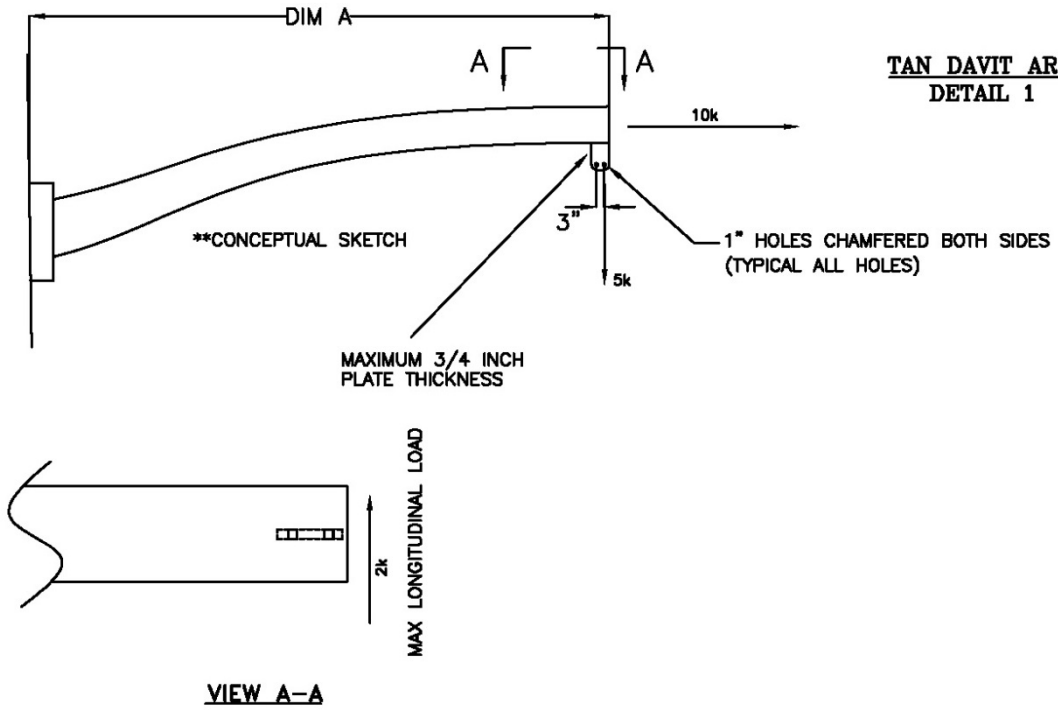

TAN DAVIT ARM
DETAIL 1

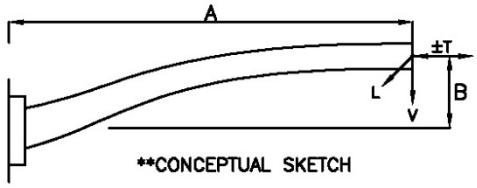

TAN DAVIT ARM
LOADING

#	ITEM NAME	LENGTH (DIM A,FT)	RISE (DIM B,FT)	LONGITUDINAL (L,KIPS)	TRANSVERSE (T,KIPS)	VERTICAL (V,KIPS)
1	4' Davit Arm	4	1	2	10	5
2	6' Davit Arm	6	1.25	2	10	5
3	8' Davit Arm	8	1.5	2	10	5
4	10' Davit Arm	10	1.5	2	10	5
5	12' Davit Arm	12	2	2	10	5
6	14' Davit Arm	14	2	2	10	5
7	16' Davit Arm	16	2.5	2	10	5

AUSTIN ENERGY POWER DELIVERY	TITLE: POLE SUPPLY AGREEMENT TANGENT DAVIT ARMS	DRAWN: ECP	SCALE: NTS
		CHECKED:	FILENAME: E0758-TDVT.dwg
		DATE: 7/19/19	DRAWING NO.: TDVT

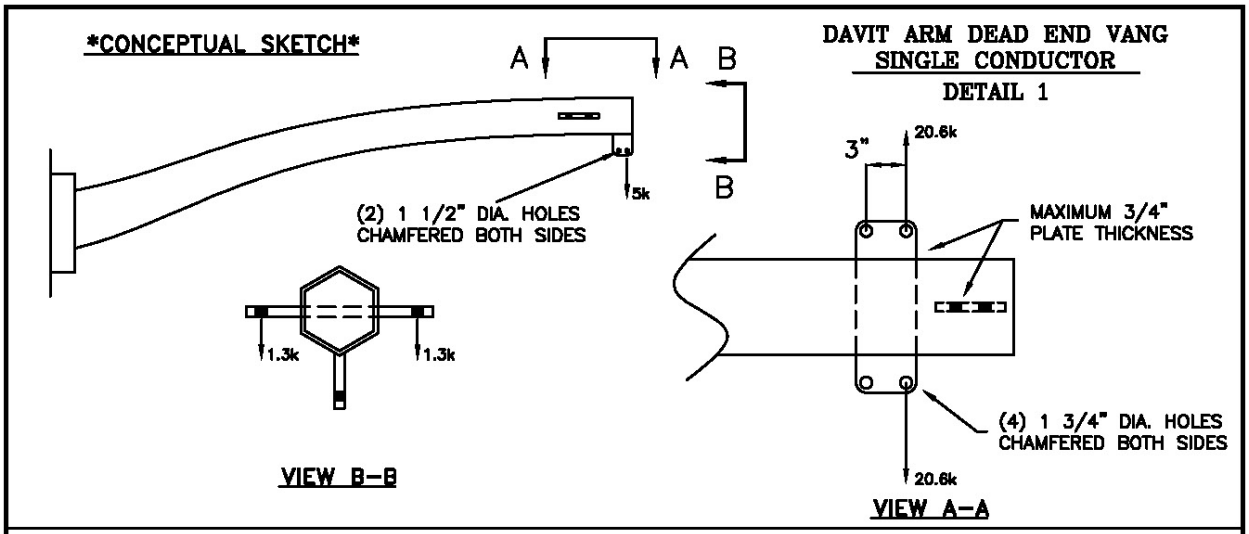

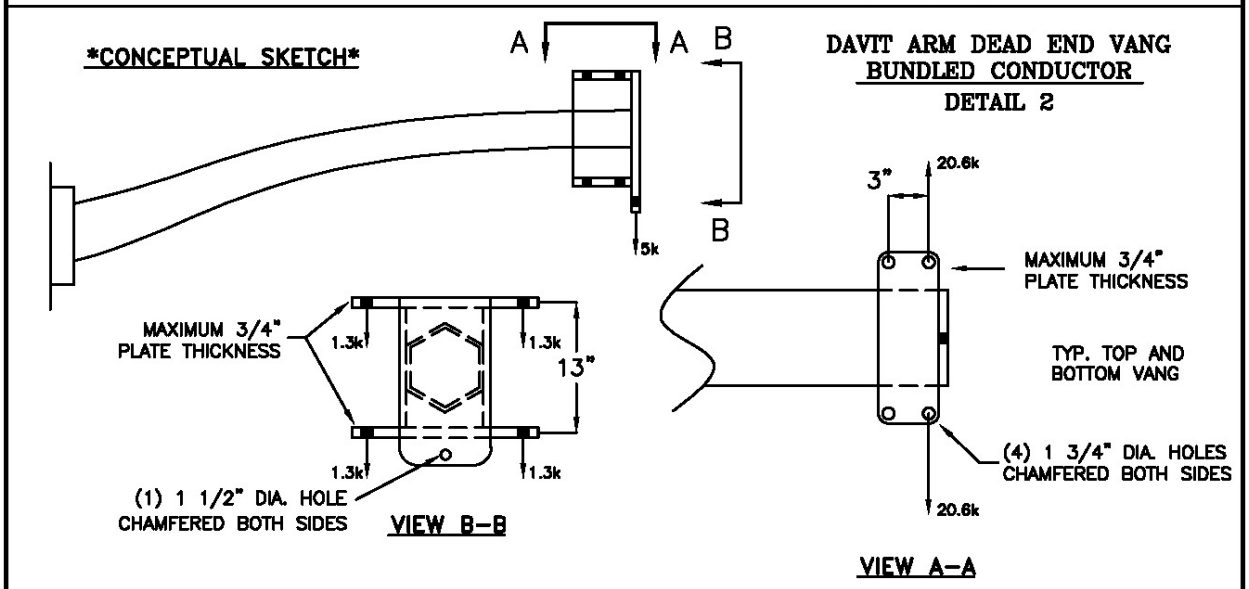

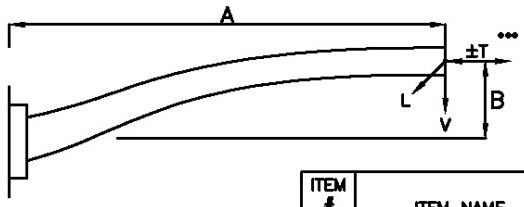

DAVIT ARM DEAD END LOADING

ITEM #	ITEM NAME	ARM LENGTH (DIM A)	# COND	RISE (DIM B)	LONGITUDINAL (L, KIPS)	TRANSVERSE (T, KIPS)	VERTICAL (V, KIPS)
26	4' DAVIT DE 1 COND	4'	1	1	20.6	1.1	5
27	4' DAVIT DE 2 COND	4'	2	1	41.2	2.2	5
28	6' DAVIT DE 1 COND	6'	1	1.25	20.6	1.1	5
29	6' DAVIT DE 2 COND	6'	2	1.25	41.2	2.2	5
30	8' DAVIT DE 1 COND	8'	1	1.5	20.6	1.1	5
31	8' DAVIT DE 2 COND	8'	2	1.5	41.2	2.2	5
32	10' DAVIT DE 1 COND	10'	1	1.5	20.6	1.1	5
33	10' DAVIT DE 2 COND	10'	2	1.5	41.2	2.2	5

AUSTIN ENERGY POWER DELIVERY	TITLE: DAVIT ARM DEAD ENDS DEAD END VANGS AND LOADS	DRAWN: ECP	SCALE: N.T.S.
		CHECKED:	FILENAME: E0758-DEDVT.dwg
		DATE: 7/2/19	DRAWING NO.: E0758-DEDVT

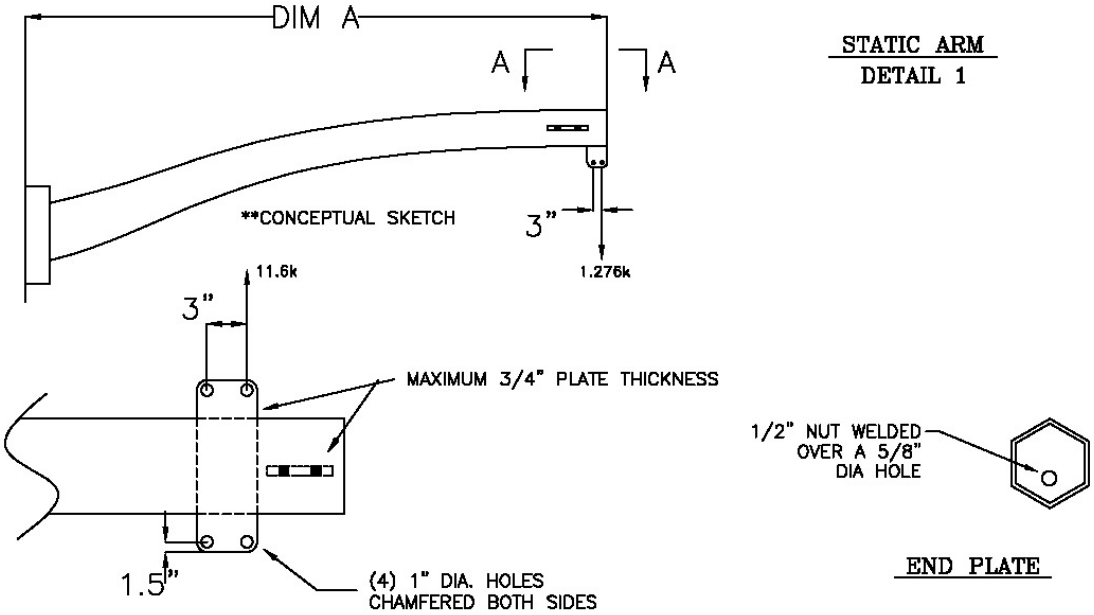

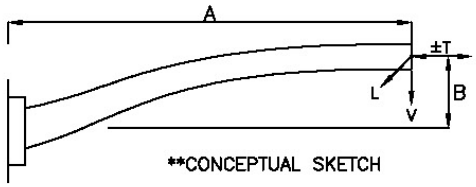

STATIC ARM
LOADING

#	ITEM NAME	LENGTH (DIM A,FT)	RISE (DIM B,FT)	LONIGTUDINAL (L,KIPS)	TRANSVERSE (T,KIPS)	VERTICAL (V,KIPS)
1	4' STATIC ARM	4	1	2	2.83	1.28
2	4' DE STATIC ARM	4	1	11.6	-	1.28
3	6' STATIC ARM	6	1.25	2	2.83	1.28
4	6' DE STATIC ARM	6	1.25	11.6	-	1.28
5	8' STATIC ARM	8	1.5	2	2.83	1.28
6	8' DE STATIC ARM	8	1.5	11.6	-	1.28
7	10' STATIC ARM	10	1.5	2	2.83	1.28
8	10' DE STATIC ARM	10	1.5	11.6	-	1.28
9	12' STATIC ARM	12	2	2	2.83	1.28
10	12' DE STATIC ARM	12	2	11.6	-	1.28

AUSTIN ENERGY POWER DELIVERY	TITLE: POLE SUPPLY AGREEMENT STATIC ARMS	DRAWN: ECP	SCALE NTS
		CHECKED:	FILENAME: E0758-STARM.dwg
		DATE: 7/19/19	DRAWING NO.: E0758-STARM

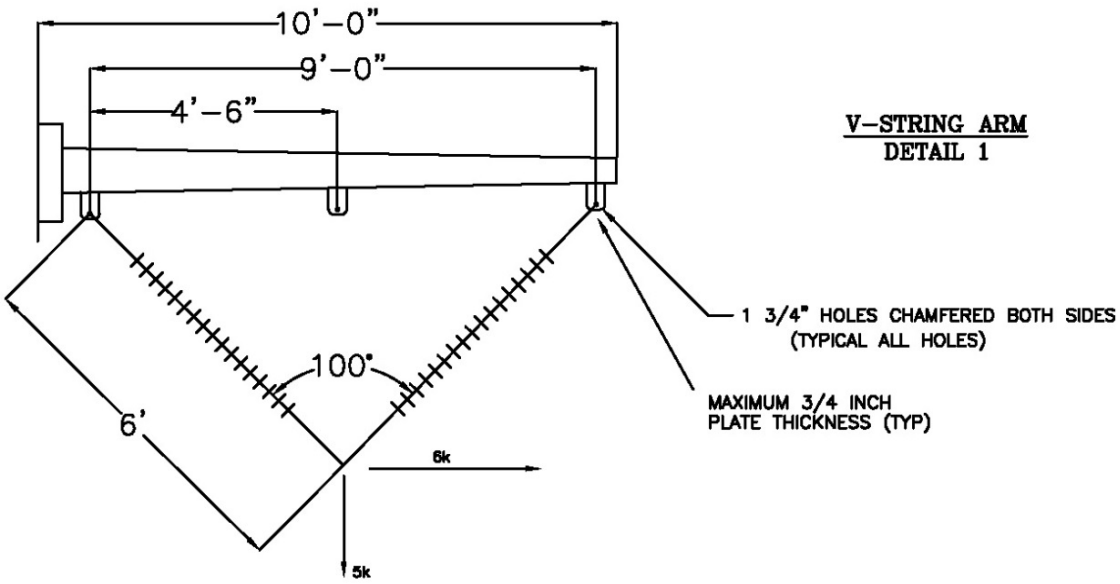

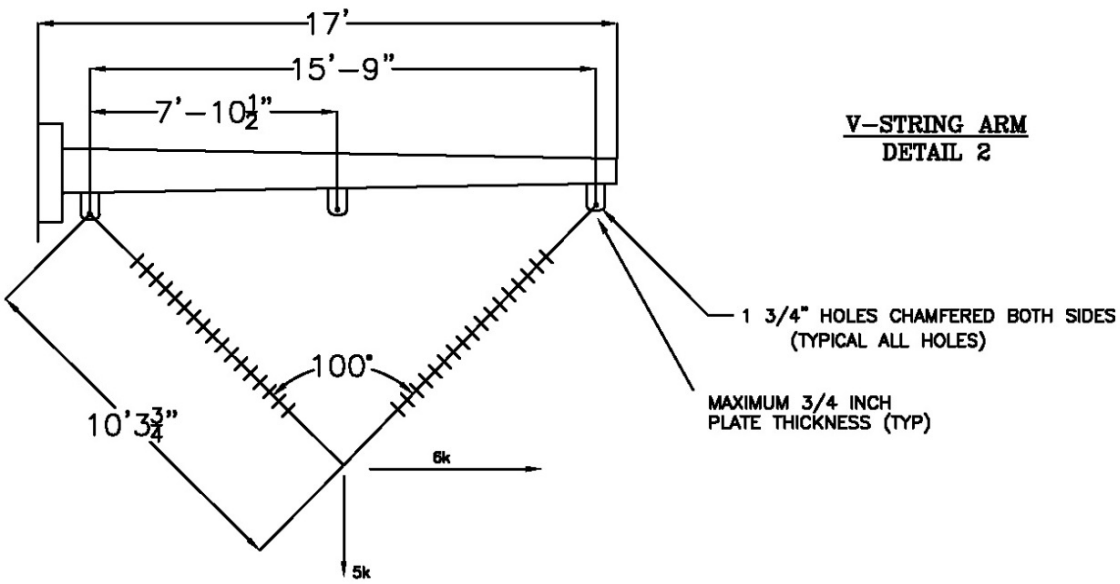

AUSTIN ENERGY POWER DELIVERY	TITLE: POLE SUPPLY AGREEMENT STATIC ARM & V–STRING ARM	DRAWN: ECP	SCALE: NTS
		CHECKED:	FILENAME: E0758–VSARM.dwg
		DATE: 7/2/19	DRAWING NO.: E0758–VSARM

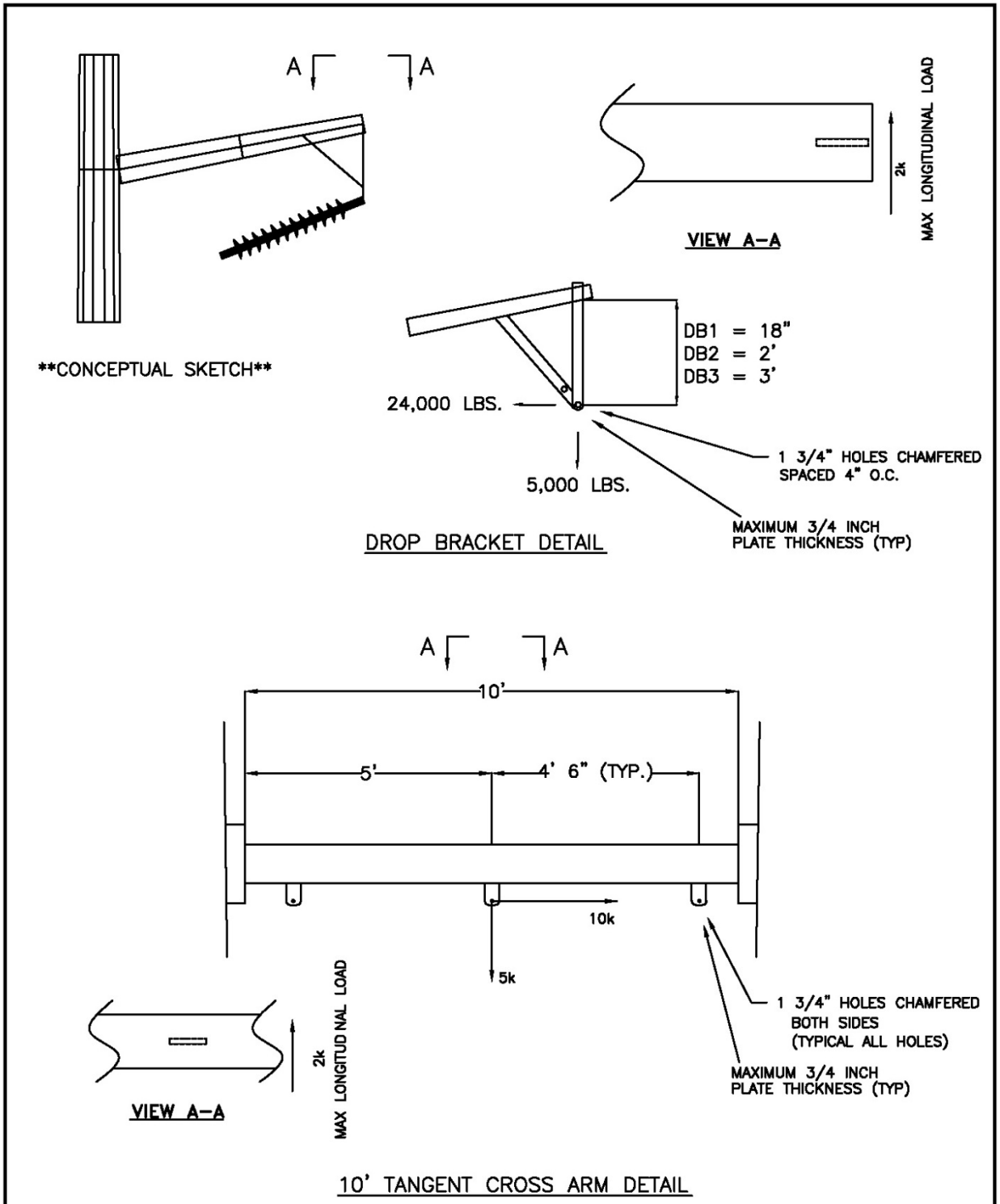

AUSTIN ENERGY POWER DELIVERY	TITLE: POLE SUPPLY AGREEMENT DROP BRACKET AND 10' CROSS ARM	DRAWN: ECP	SCALE: NTS
		CHECKED:	FILENAME: E0758–DB,TX.dwg
		DATE: 7/2/19	DRAWING NO.: E0758–DB,TX

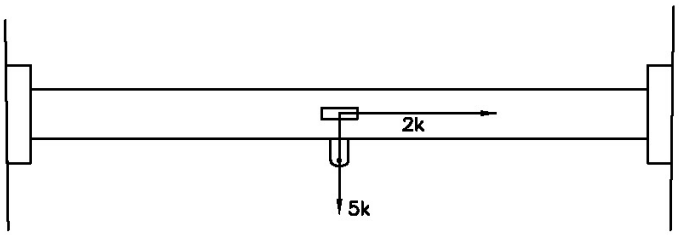

SIDE VIEW

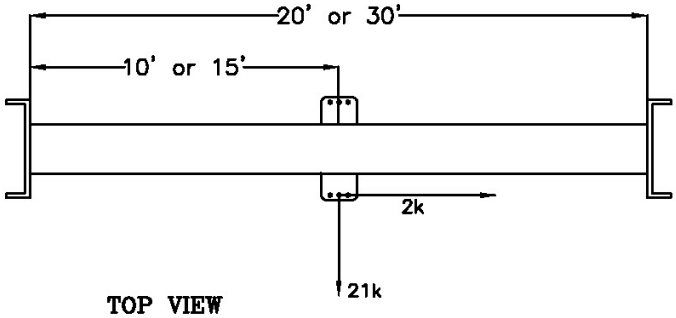

TOP VIEW

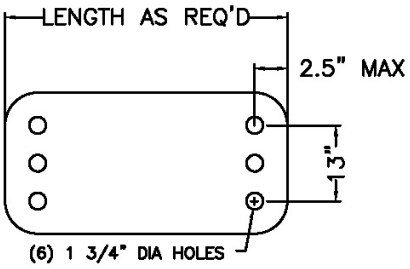

MAXIMUM 3/4" PLATE THICKNESS

VANG DETAIL

20' & 30' DEAD END CROSS ARM DETAIL

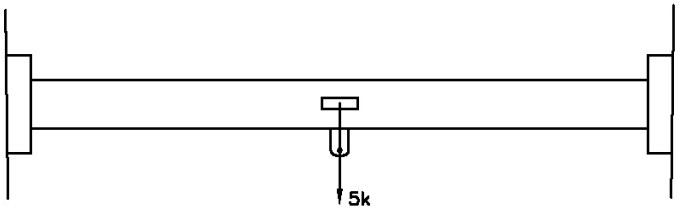

SIDE VIEW

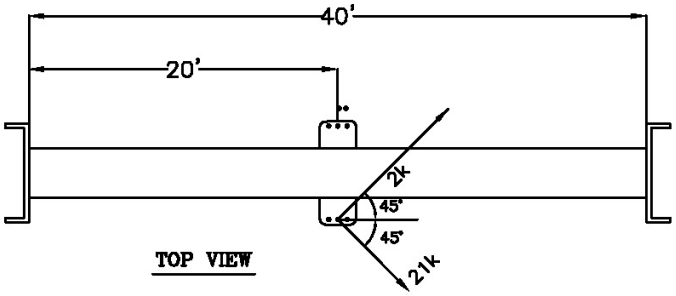

TOP VIEW

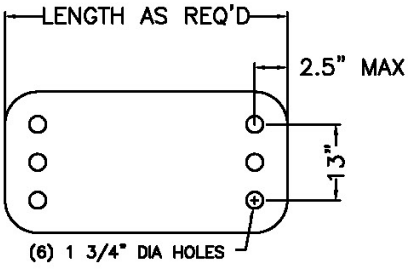

MAXIMUM 3/4" PLATE THICKNESS

VANG DETAIL

40' DEAD END CROSS ARM DETAIL

AUSTIN ENERGY POWER DELIVERY	TITLE: POLE SUPPLY AGREEMENT 20', 30' & 40' CROSS ARMS	DRAWN: JJG	SCALE: NTS	
		CHECKED:	FILENAME: E0758-DEX.dwg	
		DATE: 5/31/31	DRAWING NO.: E0758-DEX	

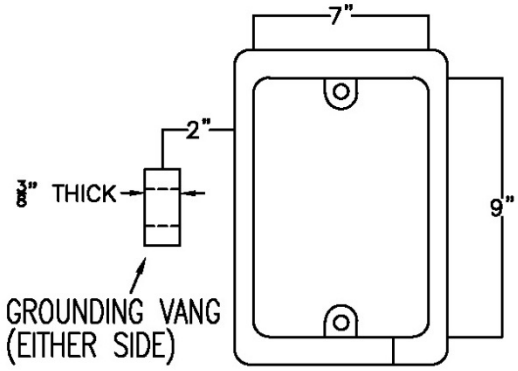

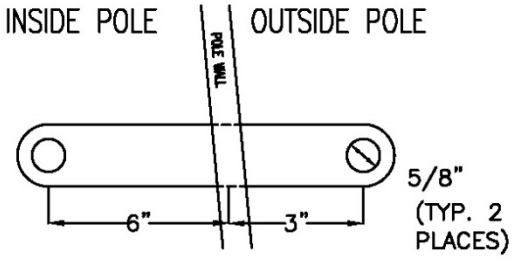

GROUNDING VANG

RIM THICKNESS (VARIES)

INSPECTION HAND HOLE DETAIL

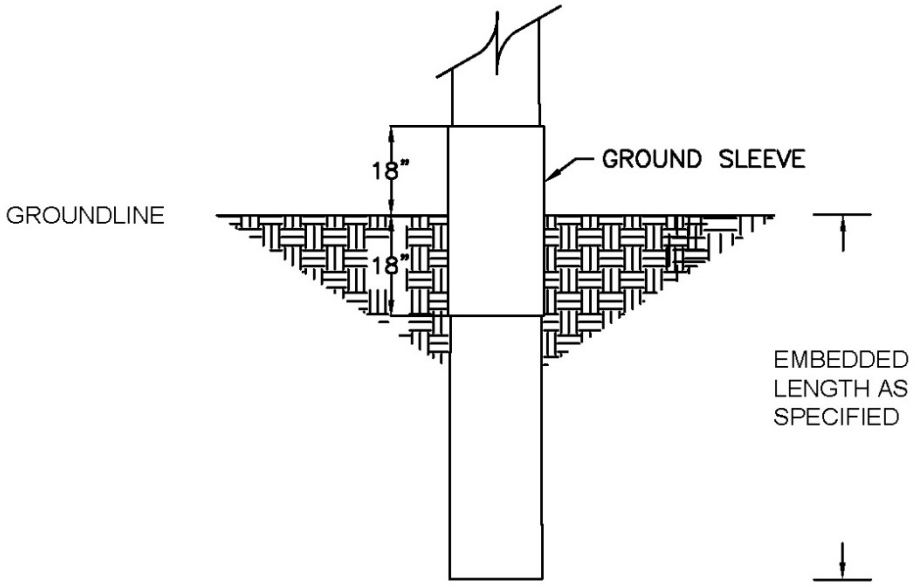

GROUND SLEEVE DETAIL

AUSTIN ENERGY POWER DELIVERY	TITLE: POLE SUPPLY AGREEMENT HAND HOLE AND GROUND SLEEVE DETAILS	DRAWN: JJG	SCALE NTS
		CHECKED:	FILENAME: E0758-HH,GRSL.dwg
		DATE: 5/31/31	DRAWING NO.: E0758-HH,GRSL

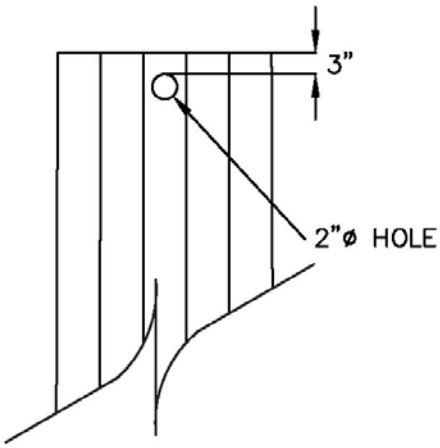

Orientation for
Steel Polygon Pole

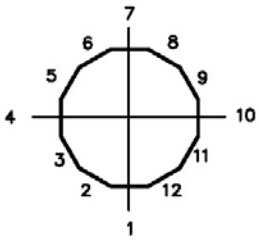

NOTE:
WHERE USED, HANDLING SLOTS/LIFTING HOLES SHALL BE AS FOLLOWS (ON FACES 1 AND 7):

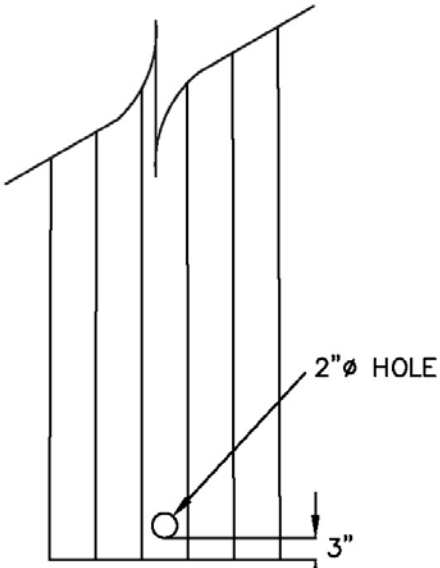

LIFTING HOLE DETAIL

AUSTIN ENERGY POWER DELIVERY	TITLE: POLE SUPPLY AGREEMENT LIFTING HOLE DETAIL	DRAWN: JJG	SCALE NTS	
		CHECKED:	FILENAME: E0758-LIFT.dwg	
		DATE: 9/27/11	DRAWING NO.: E0758-LIFT	

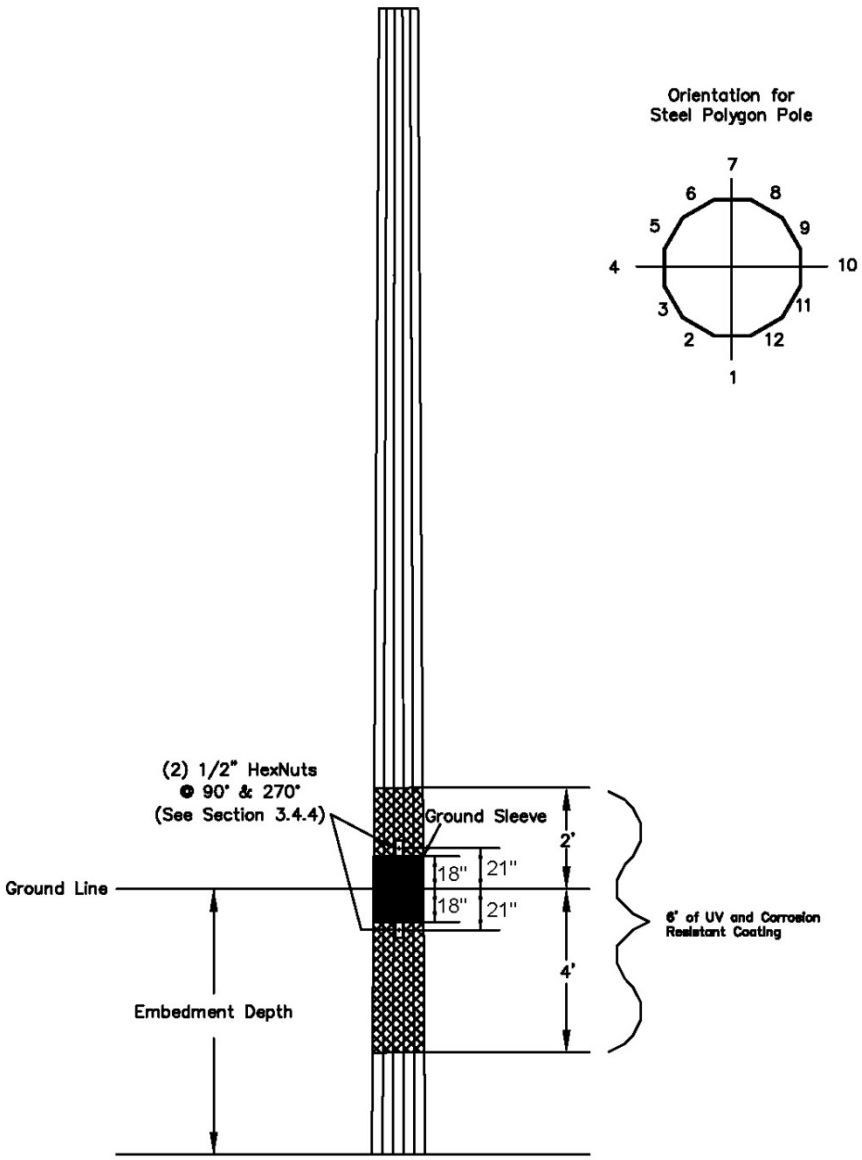

AUSTIN ENERGY POWER DELIVERY	TITLE: POLE SUPPLY AGREEMENT EMBEDDED DETAIL	DRAWN: JJG	SCALE: NTS
		CHECKED:	FILENAME: E0758-EMBDET.dwg
		DATE: 9/27/11	DRAWING NO.: E0758-EMBDET

BILL OF MATERIALS

ITEM NO.	ITEM REQ.	DESCRIPTION	CSN	EL SPEC.
1	1	ANCHOR BEAM	SPECIAL ORDER	N.S.
2	6	ANCHOR BOLT	SPECIAL ORDER	N.S.

NOTES:

1. #11 DEFORMED REINFORCING BAR GRADE 60 1-1/4" NCS THREAD.
2. 1 NUT AND 1 WASHER SUPPLIED FOR EACH ANCHOR BOLT.
3. NUT, WASHER, & MINIMUM 10" (THREADS) OF BOLT TO BE GALVANIZED AS PER ASTM 123.

SIX ANCHOR BOLTS REQUIRED FOR EACH ANCHOR BEAM

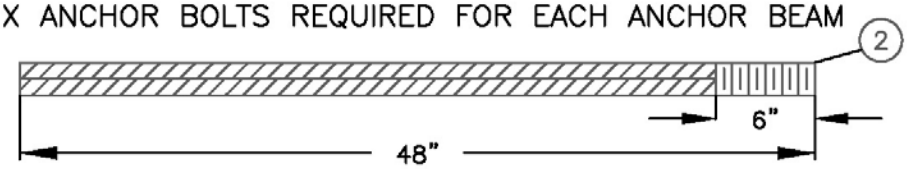

ANCHOR BOLT
N.T.S.

FOR FOUNDATION DETAILS, SEE FOUNDATION SCHEDULE.

TH-0A-40

STEEL SCHEDULE		
STEEL GRADE	DIMENSIONS A	DIMENSIONS B
65	1"	1"

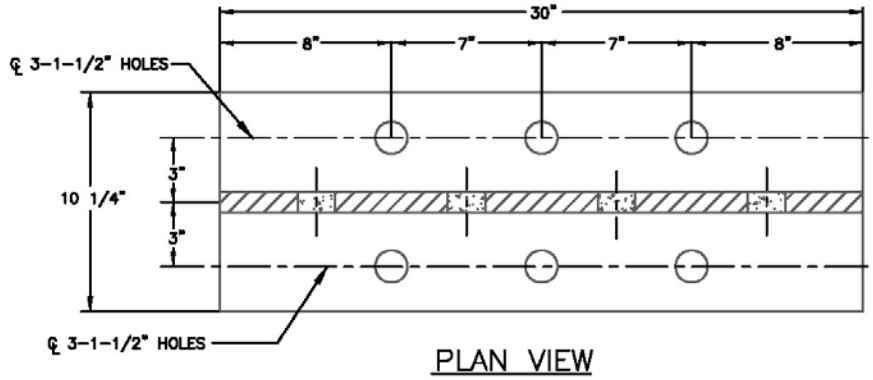

PLAN VIEW

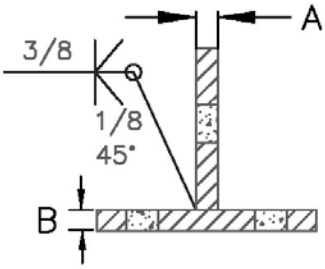

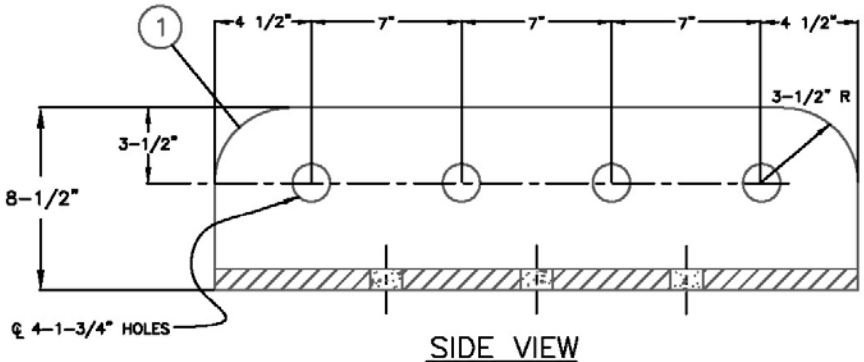

SIDE VIEW

HOT DIP GALV. AFTER FABRICATION.

AUSTIN ENERGY POWER DELIVERY	TITLE: ANCHOR BEAM	DRAWN: MTL	SCALE N.T.S.	
		CHECKED:	FILENAME: TH-0A-40	
		DATE: 9/18/01	DRAWING NO.: TH-0A-40	

SW RING VANG
DETAIL 1

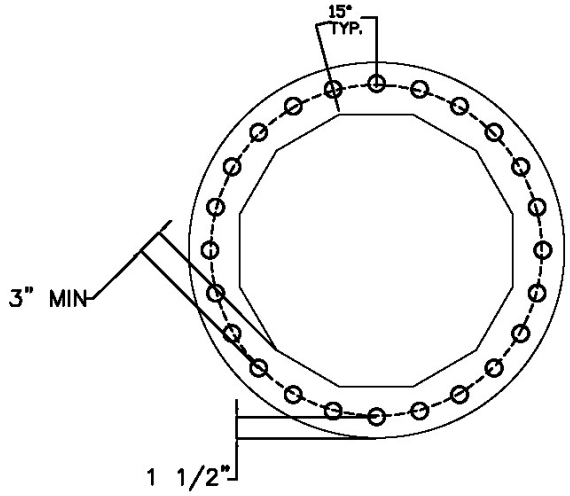

(24) 1" DIA HOLES
CHAMFERED BOTH SIDES

3/4 INCH
PLATE THICKNESS

COND RING VANG
DETAIL 1

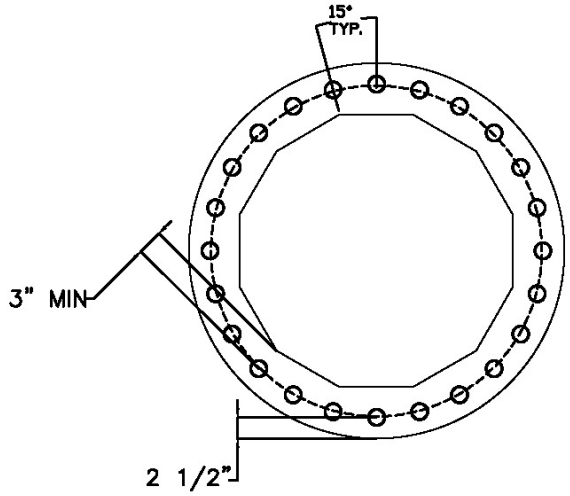

(24) 1 3/4" DIA HOLES
CHAMFERED BOTH SIDES

3/4 INCH
PLATE THICKNESS

AUSTIN ENERGY POWER DELIVERY	TITLE: POLE SUPPLY AGREEMENT RING VANGS				DRAWN: ECP	SCALE NTS
					CHECKED:	FILENAME: E0758-RV.dwg
					DATE: 7/2/19	DRAWING NO.: E0758-RV

CITY OF AUSTIN
PURCHASING OFFICE
SECTION 0600 - PROPOSAL PREPARATION INSTRUCTIONS AND EVALUATION FACTORS
SOLICITATION NUMBER: RFP 1100 MMH3010: DESIGN AND FABRICATION OF TRANSMISSION POLES

1. **PROPOSAL FORMAT**

Prefacing the proposal, the Proposer shall provide an Executive Summary of three (3) pages or less, which gives in brief, concise terms, a summation of the proposal. The proposal itself shall be organized in the following format and informational sequence:

A. **Business Organization**: State full name and address of your organization and identify parent company if you are a subsidiary. Specify the branch office or other subordinate element which will perform, or assist in performing, work herein. Indicate whether you operate as a partnership, corporation, or individual. Include the State in which incorporated or licensed to operate.

B. **Technical Concept and Solutions**: Define in detail your understanding of the requirement presented in the Purchase Specification (Section 0500) of this request for proposal and your solution. Provide all details as required in the Purchase Specification and any additional information you deem necessary to evaluate your proposal.

i. Calculations

ii. Drawings

iii. Fabrication (QA/QC)

C. **Performance Capability**: Describe only corporate experience related to producing the products specified in this solicitation. If the Offeror is not the manufacturer, the Offeror shall supply information describing the experience of the Offeror as well as of the manufacturer. At a minimum, specifically provide:

i. Details about the manufacturing facility that will be used to produce the products specified in this solicitation. This should include the location, capacity, and special capabilities as well as anything else that you deem important for the City to know about the facility. If multiple facilities may be used to support the City's needs, please list all facilities that may be used. If multiple facilities are listed, please designate one of the facilities as the primary facility designated to supply the City.

ii. Location of primary business office and location of office that will serve Austin Energy (if different from primary office).

D. **Prior Experience**: Describe only relevant corporate experience and individual experience for personnel who will be actively engaged in the project. Do not include corporate experience unless personnel assigned to this project actively participated. Do not include experience prior to 2010. Texas based utilities are preferred, but not required.

i. Corporate Experience: Offeror shall provide evidence of full service in design and fabrication management of transmission facilities and related services. Provide a list of similar services to other municipal electric systems. The list shall include municipal, and investor-owned utilities for which the Contractor has performed electric transmission pole design engineering and fabrication services within the past ten years.

ii. Personnel: Supply list of customers including company name, contact information and description of the contract such as length of alliance, types and sizes of poles provided, and contract value. Provide biographies or resumes, including home office location and other relevant information, for each key staff member likely to be assigned to the project and for any sub-consultants proposed to be used for the project.

E. **Delivery Lead Times**: State your guaranteed lead times after receipt of a purchase order. This should include milestones for any intermediate deliverables such as a drawing approval. Different lead times for different materials, such as poles and anchor bolt cages, is acceptable.

F. **Cost Proposal**:

i. Complete Section 07050 Cost Proposal Sheet for Transmission. Alternative pricing proposal will be considered only if the complete description of methodology and benefits is stated in detail.

ii. Price Adjustment Clause: - Describe the price adjustment clause that you are proposing. This shall include all details such market indices, weights, calculations and adjustment frequency. Please note if any market indices require a subscription fee or other financial obligation, the successful Proposer (i.e. Contractor) shall pay for the City's subscription during entire term of the Contract.

G. **Local Business Presence**: The City seeks opportunities for businesses in the Austin Corporate City Limits to participate on City contracts. A firm (Offeror or Subcontractor) is considered to have a Local Business Presence if the firm is headquartered in the Austin Corporate City Limits, or has a branch office located in the Austin Corporate City Limits in operation for the last five (5) years, currently employs residents of the City of Austin, Texas, and will use employees that reside in the City of Austin, Texas, to support this contract. The City defines headquarters as the administrative center where most of the important functions and full responsibility for managing and coordinating the business activities of the firm are located. The City defines branch office as a smaller, remotely located office that is separate from a firm's headquarters that offers the services requested and required under this solicitation. Points will be awarded through a combination of the Offeror's Local Business Presence and/or the Local Business Presence of their subcontractors. Evaluation of the Team's Percentage of Local Business Presence will be based on the dollar amount of work as reflected in the Offeror's MBE/WBE Compliance Plan or MBE/WBE Utilization Plan. Specify if and by which definition the Offeror or Subcontractor(s) have a local business presence.

H. **Service-Disabled Veteran Business Enterprise ("SDVBE"):** Pursuant to the interim Service-Disabled Veteran Business Enterprise (SDVBE) Program, Offerors submitting proposals in response to a Request for Proposals shall receive a three point (3 percent) preference if the Offeror, at the same time the proposal is submitted, is certified by the State of Texas, Comptroller of Public Accounts as a Historically Underutilized Business and is a Service-Disabled Veteran Business Enterprise. This preference does not apply to subcontractors. To receive this preference, Offerors shall complete the enclosed Section 0840 Service-Disabled Veterans Business Enterprise Preference Form, in accordance with the Additional Solicitation Instructions included therein.

I. **Proposal Acceptance Period:** All proposals are valid for a period of one hundred and twenty (120) calendar days subsequent to the RFP closing date unless a longer acceptance period is offered in the proposal

J. **Proprietary Information:** All material submitted to the City becomes public property and is subject to the Texas Open Records Act upon receipt. If a Proposer does not desire proprietary information in the proposal to be disclosed, each page must be identified and marked proprietary at time of submittal. The City will, to the extent allowed by law, endeavor to protect such information from disclosure. The final decision as to what information must be disclosed, however, lies with the Texas Attorney General. Failure to identify proprietary information will result in all unmarked sections being deemed non-proprietary and available upon public request.

K. **Authorized Negotiator:** Include name, address, and telephone number of person in your organization authorized to negotiate Contract terms and render binding decisions on Contract matters.

2. **EXCEPTIONS**:

Be advised that exceptions to any portion of the Solicitation may jeopardize acceptance of the Proposal.

3. **PROPOSAL PREPARATION COSTS**:

All costs directly or indirectly related to preparation of a response to the RFP or any oral presentation required to supplement and/or clarify a proposal which may be required by the City shall be the sole responsibility of the Proposer.

4. **EVALUATION FACTORS AND AWARD**

A. **Competitive Selection**: This procurement will comply with applicable City Policy. The successful Proposer will be selected by the City on a rational basis. Evaluation factors outlined in Paragraph B below shall be applied to all eligible, responsive Proposers in comparing proposals and selecting the Best Offeror. Award of a Contract may be made without discussion with Proposers after proposals are received. Proposals should, therefore, be submitted on the most favorable terms.

B. **Evaluation Factors**:

i. 100 points.

(1) Technical Concept and Solutions -22
(2) Performance Capability – 19
(3) Prior Experience - 16
(4) Delivery Lead Times 17
(5) Cost Proposal – 13
(6) Service-Disabled Veteran Business Enterprise Preference (3 points)
(7) LOCAL BUSINESS PRESENCE (Maximum 10 points)

Team's Local Business Presence	Points Awarded
Local business presence of 90% to 100%	10
Local business presence of 75% to 89%	8
Local business presence of 50% to 74%	6
Local business presence of 25% to 49%	4
Local presence of between 1 and 24%	2
No local presence	0

ii. Presentations, Demonstrations Optional. The City will score proposals on the basis of the criteria listed above. The City may select a "short list" of Proposers based on those scores. "Short-listed" Proposers may be invited for presentations, or demonstrations with the City. The City may also choose to visit the Proposer's designated manufacturing facility to review fabrication and QA/QC processes. The City reserves the right to re-score "short-listed" proposals as a result, and to make award recommendations on that basis.

Section 0605: Local Business Presence Identification

A firm (Offeror or Subcontractor) is considered to have a Local Business Presence if the firm is headquartered in the Austin Corporate City Limits, or has a branch office located in the Austin Corporate City Limits in operation for the last five (5) years, currently employs residents of the City of Austin, Texas, and will use employees that reside in the City of Austin, Texas, to support this Contract. The City defines headquarters as the administrative center where most of the important functions and full responsibility for managing and coordinating the business activities of the firm are located. The City defines branch office as a smaller, remotely located office that is separate from a firm's headquarters that offers the services requested and required under this solicitation.

OFFEROR MUST SUBMIT THE FOLLOWING INFORMATION FOR EACH LOCAL BUSINESS (INCLUDING THE OFFEROR, IF APPLICABLE) TO BE CONSIDERED FOR LOCAL PRESENCE.

NOTE: ALL FIRMS MUST BE IDENTIFIED ON THE MBE/WBE COMPLIANCE PLAN OR NO GOALS UTILIZATION PLAN (REFERENCE SECTION 0900).

USE ADDITIONAL PAGES AS NECESSARY

OFFEROR:

Name of Local Firm		
Physical Address		
Is your headquarters located in the Corporate City Limits? (circle one)	Yes	No
or		
Has your branch office been located in the Corporate City Limits for the last 5 years?	Yes	No
Will your business be providing additional economic development opportunities created by the contract award? (e.g., hiring, or employing residents of the City of Austin or increasing tax revenue?)	Yes	No

SUBCONTRACTOR(S):

Name of Local Firm		
Physical Address		
Is your headquarters located in the Corporate City Limits? (circle one)	Yes	No
or		
Has your branch office been located in the Corporate City Limits for the last 5 years	Yes	No

Will your business be providing additional economic development opportunities created by the contract award? (e.g., hiring, or employing residents of the City of Austin or increasing tax revenue?)	Yes	No

SUBCONTRACTOR(S):

Name of Local Firm		
Physical Address		
Is your headquarters located in the Corporate City Limits? (circle one)	Yes	No
or		
Has your branch office been located in the Corporate City Limits for the last 5 years	Yes	No
Will your business be providing additional economic development opportunities created by the contract award? (e.g., hiring, or employing residents of the City of Austin or increasing tax revenue?)	Yes	No

Section 0700: Reference Sheet

Responding Company Name _____

The City at its discretion may check references in order to determine the Offeror's experience and ability to provide the products and/or services described in this Solicitation. The Offeror shall furnish at least 3 complete and verifiable references. References shall consist of customers to whom the offeror has provided the same or similar services within the last 5 years. References shall indicate a record of positive past performance.

1. Company's Name _____

   Name and Title of Contact _____

   Project Name _____

   Present Address _____

   City, State, Zip Code _____

   Telephone Number (_____)_____ Fax Number (_____)_____

   Email Address _____

2. Company's Name _____

   Name and Title of Contact _____

   Project Name _____

   Present Address _____

   City, State, Zip Code _____

   Telephone Number (_____)_____ Fax Number (_____)_____

   Email Address _____

3. Company's Name _____

   Name and Title of Contact _____

   Project Name _____

   Present Address _____

   City, State, Zip Code _____

   Telephone Number (_____)_____ Fax Number (_____)_____

   Email Address _____

City of Austin, Texas
Section 0800
NON-DISCRIMINATION AND NON-RETALIATION CERTIFICATION

City of Austin, Texas

Equal Employment/Fair Housing Office

To: City of Austin, Texas,

I hereby certify that our firm complies with the Code of the City of Austin, Section 5-4-2 as reiterated below, and agrees:

(1) Not to engage in any discriminatory employment practice defined in this chapter.

(2) To take affirmative action to ensure that applicants are employed, and that employees are treated during employment, without discrimination being practiced against them as defined in this chapter, including affirmative action relative to employment, promotion, demotion or transfer, recruitment or recruitment advertising, layoff or termination, rate of pay or other forms of compensation, and selection for training or any other terms, conditions or privileges of employment.

(3) To post in conspicuous places, available to employees and applicants for employment, notices to be provided by the Equal Employment/Fair Housing Office setting forth the provisions of this chapter.

(4) To state in all solicitations or advertisements for employees placed by or on behalf of the Contractor, that all qualified applicants will receive consideration for employment without regard to race, creed, color, religion, national origin, sexual orientation, gender identity, disability, sex or age.

(5) To obtain a written statement from any labor union or labor organization furnishing labor or service to Contractors in which said union or organization has agreed not to engage in any discriminatory employment practices as defined in this chapter and to take affirmative action to implement policies and provisions of this chapter.

(6) To cooperate fully with City and the Equal Employment/Fair Housing Office in connection with any investigation or conciliation effort of the Equal Employment/Fair Housing Office to ensure that the purpose of the provisions against discriminatory employment practices are being carried out.

(7) To require of all subcontractors having 15 or more employees who hold any subcontract providing for the expenditure of $2,000 or more in connection with any contract with the City subject to the terms of this chapter that they do not engage in any discriminatory employment practice as defined in this chapter

For the purposes of this Offer and any resulting Contract, Contractor adopts the provisions of the City's Minimum Standard Non-Discrimination and Non-Retaliation Policy set forth below.

City of Austin
Minimum Standard Non-Discrimination and Non-Retaliation in Employment Policy

As an Equal Employment Opportunity (EEO) employer, the Contractor will conduct its personnel activities in accordance with established federal, state and local EEO laws and regulations.

The Contractor will not discriminate against any applicant or employee based on race, creed, color, national origin, sex, age, religion, veteran status, gender identity, disability, or sexual orientation. This policy covers all aspects of employment, including hiring, placement, upgrading, transfer, demotion, recruitment, recruitment advertising, selection for training and apprenticeship, rates of pay or other forms of compensation, and layoff or termination.

The Contractor agrees to prohibit retaliation, discharge or otherwise discrimination against any employee or applicant for employment who has inquired about, discussed or disclosed their compensation.

Further, employees who experience discrimination, sexual harassment, or another form of harassment should immediately report it to their supervisor. If this is not a suitable avenue for addressing their compliant, employees are advised to contact another member of management or their human resources representative. No employee shall be discriminated against, harassed, intimidated, nor suffer any reprisal as a result of reporting a violation of this policy. Furthermore, any employee, supervisor, or manager who becomes aware of any such discrimination or harassment should immediately report it to executive management or the human resources office to ensure that such conduct does

not continue.

Contractor agrees that to the extent of any inconsistency, omission, or conflict with its current non-discrimination and non-retaliation employment policy, the Contractor has expressly adopted the provisions of the City's Minimum Non-Discrimination Policy contained in Section 5-4-2 of the City Code and set forth above, as the Contractor's Non-Discrimination Policy or as an amendment to such Policy and such provisions are intended to not only supplement the Contractor's policy, but will also supersede the Contractor's policy to the extent of any conflict.

UPON CONTRACT AWARD, THE CONTRACTOR SHALL PROVIDE THE CITY A COPY OF THE CONTRACTOR'S NON-DISCRIMINATION AND NON-RETALIATION POLICIES ON COMPANY LETTERHEAD, WHICH CONFORMS IN FORM, SCOPE, AND CONTENT TO THE CITY'S MINIMUM NON-DISCRIMINATION AND NON-RETALIATION POLICIES, AS SET FORTH HEREIN, **OR** THIS NON-DISCRIMINATION AND NON-RETALIATION POLICY, WHICH HAS BEEN ADOPTED BY THE CONTRACTOR FOR ALL PURPOSES WILL BE CONSIDERED THE CONTRACTOR'S NON-DISCRIMINATION AND NON-RETALIATION POLICY WITHOUT THE REQUIREMENT OF A SEPARATE SUBMITTAL.

Sanctions:

Our firm understands that non-compliance with Chapter 5-4 and the City's Non-Retaliation Policy may result in sanctions, including termination of the contract and suspension or debarment from participation in future City contracts until deemed compliant with the requirements of Chapter 5-4 and the Non-Retaliation Policy.

Term:

The Contractor agrees that this Section 0800 Non-Discrimination and Non-Retaliation Certificate of the Contractor's separate conforming policy, which the Contractor has executed and filed with the City, will remain in force and effect for one year from the date of filling. The Contractor further agrees that, in consideration of the receipt of continued Contract payment, the Contractor's Non-Discrimination and Non-Retaliation Policy will automatically renew from year-to-year for the term of the underlying Contract.

Dated this _____ day of _____, _____

CONTRACTOR _____

Authorized Signature _____

Title _____

Section 0835: Non-Resident Bidder Provisions

Company Name _____

A. Bidder must answer the following questions in accordance with Vernon's Texas Statues and Codes Annotated Government Code 2252.002, as amended:

   Is the Bidder that is making and submitting this Bid a "Resident Bidder" or a "non-resident Bidder"?

   Answer: _____

   (1) Texas Resident Bidder- A Bidder whose principle place of business is in Texas and includes a Contractor whose ultimate parent company or majority owner has its principal place of business in Texas.
   (2) Nonresident Bidder- A Bidder who is not a Texas Resident Bidder.

B. If the Bidder id a "Nonresident Bidder" does the state, in which the Nonresident Bidder's principal place of business is located, have a law requiring a Nonresident Bidder of that state to bid a certain amount or percentage under the Bid of a Resident Bidder of that state in order for the nonresident Bidder of that state to be awarded a Contract on such bid in said state?

   Answer: _____ Which State: _____

C. If the answer to Question B is "yes", then what amount or percentage must a Texas Resident Bidder bid under the bid price of a Resident Bidder of that state in order to be awarded a Contract on such bid in said state?

   Answer: _____

Section 0840, Service-Disabled Veteran Business Enterprise Preference

Offeror Name
[OFFEROR NAME]

Additional Solicitation Instructions.

1. ☐ By checking this box, Offeror states they are NOT a certified Service-Disabled Veteran Business Enterprise seeking to claim preference points under the City of Austin's SDVBE Program.

2. Offerors seeking to claim the Service-Disabled Veteran Business Enterprise (SDVBE) preference shall be certified **under one of the two following scenarios**. Offerors shall check one of the following boxes, input the data in the applicable table below and include this completed form in their Proposal.

   ☐ **HUB/SV**. Offeror is certified as a Service-Disabled Veteran (SV) Historically Underutilized Business (HUB) by the Texas State Comptroller of Public Accounts.

Texas State HUB/SV Certification	
13-Digit Vendor ID (VID)	
HUB/SV Issue Date	
HUB/SV Expiration Date	

   ☐ **HUB/OTHER + Federal SDVOSB**. Offeror is certified by the Texas State Comptroller of Public Accounts as a Historically Underutilized Business in a HUB Eligibility Category other than Service-Disabled Veteran (SV) AND is verified by the US Veterans Administration as a Service-Disabled Veteran-Owned Small Business (SDVOSB). **Texas HUB Eligibility Categories:** HUB/BL (Black), HUB/AS (Asian), HUB/HI (Hispanic), HUB/AI (Native American), or HUB/WO (Women Owned).

Texas State HUB/OTHER Certification	
13-Digit Vendor ID (VID)	
HUB Eligibility Category	
HUB Issue Date	
HUB Expiration Date	

Federal SDVOSB Verification	
9-Digit DUNS	
SDVOSB Issue Date	
SDVOSB Expiration Date	

3. Offeror Identity. The Offeror submitting the Proposal shall be the same entity that is certified by the Texas State Comptroller of Public Accounts, AND if applicable as verified by the US Veterans Administration.

4. Certification Status. Offeror's certification(s) must be active on or before the Solicitation's due date for Proposals and shall not expire prior to the award and execution of any resulting contract.

5. Confirmation of Certification(s). Upon receipt of this completed form, the City will confirm the Offeror's certification(s): State: https://mycpa.cpa.state.tx.us/tpasscmblsearch. Federal: https://www.vip.vetbiz.gov/ The City will direct any questions concerning an Offeror's State or Federal certification status to the Offeror's contact person as designated on the Offer Form of their Proposal.

6. Misrepresentation. If the City determines that the Offeror requesting this preference is not certified by the State or Federal government if applicable, the Offeror will not receive the preference points. If the City determines that this misrepresentation was intentional, the City may also find the Offeror not responsible and may report the Offeror to the Texas State Comptroller of Public Accounts or if applicable to the US Veterans Administration. If the misrepresentation is discovered after contract award, the City reserves the right to void the contract.

Section 0900: SUBCONTRACTING/SUB-CONSULTING UTILIZATION FORM

MINORITY- AND WOMEN-OWNED BUSINESS ENTERPRISE (MBE/WBE)
PROCUREMENT PROGRAM
Subcontracting/Sub-Consulting ("Subcontractor") Utilization Form

SOLICITATION NUMBER:
SOLICITATION TITLE:

In accordance with the City of Austin's Minority and Women-Owned Business Enterprises (M/WBE) Procurement Program (Program), Chapters 2-9A/B/C/D of the City Code and M/WBE Program Rules, this Solicitation was reviewed by the Small and Minority Business Resources Department (SMBR) to determine if M/WBE Subcontractor/Sub-Consultant ("Subcontractor") Goals could be applied. Due to insufficient subcontracting/subconsultant opportunities and/or insufficient availability of M/WBE certified firms, SMBR has assigned no subcontracting goals for this Solicitation. However, Offerors who choose to use Subcontractors must comply with the City's M/WBE Procurement Program as described below. Additionally, if the Contractor seeks to add Subcontractors after the Contract is awarded, the Program requirements shall apply to any Contract(s) resulting from this Solicitation.

Instructions:
a.) Offerors who do not intend to use Subcontractors shall check the "NO" box and follow the corresponding instructions.
b.)Offerors who intend to use Subcontractors shall check the applicable "YES" box and follow the instructions. **Offers that do not include the following required documents shall be deemed non-compliant or nonresponsive as applicable, and the Offeror's submission may not be considered for award.**

☐ **NO, I DO NOT intend to use Subcontractors/Sub-consultants.**
Instructions: Offerors that do not intend to use Subcontractors shall complete and sign this form below (Subcontracting/Sub-Consulting ("Subcontractor") Utilization Form) and include it with their sealed Offer.

☐ **YES, I DO intend to use Subcontractors /Sub-consultants.**
Instructions: Offerors that do intend to use Subcontractors shall complete and sign this form below (Subcontracting/Sub-Consulting ("Subcontractor") Utilization Form), and follow the additional Instructions in the (Subcontracting/Sub-Consulting ("Subcontractor") Utilization Plan). Contact SMBR if there are any questions about submitting these forms.

Offeror Information			
Company Name			
City Vendor ID Code			
Physical Address			
City, State Zip			
Phone Number		Email Address	
If the Offeror City of Austin M/WBE certified?	☐ NO ☐ YES Indicate one: ☐ MBE ☐ WBE ☐ MBE/WBE Joint Venture		

Offeror Certification: I understand that even though SMBR did not assign subcontract goals to this Solicitation, I will comply with the City's M/WBE Procurement Program if I intend to include Subcontractors in my Offer. I further agree that this completed **Subcontracting/Sub-Consulting Utilization Form,** and if applicable my completed **Subcontracting/Sub-Consulting Utilization Plan**, shall become a part of any Contract I may be awarded as the result of this Solicitation. Further, if I am awarded a Contract and I am not using Subcontractor(s) but later intend to add Subcontractor(s), before the Subcontractor(s) is hired or begins work, I will comply with the City's M/WBE Procurement Program and submit the **Request For Change** form to add any Subcontractor(s) to the Project Manager or the Contract Manager for prior authorization by the City and perform Good Faith Efforts (GFE), if applicable. I understand that, if a Subcontractor is not listed in my **Subcontracting/Sub-Consulting Utilization Plan,** it is a violation of the City's M/WBE Procurement Program for me to hire the Subcontractor or allow the Subcontractor to begin work, unless I first obtain City approval of my **Request for Change** form. I understand that, if a Subcontractor is not listed in my **Subcontracting/Sub-Consulting Utilization Plan,** it is a violation of the City's M/WBE Procurement Program for me to hire the Subcontractor or allow the Subcontractor to begin work, unless I first obtain City approval of my **Request for Change** form.

_____ _____

Name and Title of Authorized Representative (Print or Type) Signature/Date

Section 0905: SUBCONTRACTING/SUB-CONSULTING UTILIZATION PLAN

MINORITY- AND WOMEN-OWNED BUSINESS ENTERPRISE (MBE/WBE)
PROCUREMENT PROGRAM
Subcontracting/Sub-Consulting ("Subcontractor") Utilization Plan

SOLICITATION NUMBER:
SOLICITATION TITLE:

INSTRUCTIONS: Offerors who DO intend to use Subcontractors may utilize M/WBE Subcontractor(s) or perform Good Faith efforts when retaining Non-certified Subcontractor(s). Offerors must determine which type of Subcontractor(s) they are anticipating to use (CERTIFIED OR NON-CERTIFIED), check the box of their applicable decision, and comply with the additional instructions associated with that particular selection.

☐ I intend to use City of Austin CERTIFIED M/WBE Subcontractor/Sub-consultant(s).

Instructions: Offerors may use Subcontractor(s) that ARE City of Austin certified M/WBE firms. Offerors shall contact SMBR (512-974-7600 or SMBRComplianceDocuments@austintexas.gov) to confirm if the Offeror's intended Subcontractor(s) are City of Austin certified M/WBE and if these firm(s) are certified to provide the goods and services the Offeror intends to subcontract. If the Offeror's Subcontractor(s) are current valid certified City of Austin M/WBE firms, the Offeror shall insert the name(s) of their Subcontractor(s) into the table below and must include the following documents in their sealed Offer:

- Subcontracting/Sub-Consulting Utilization Form (completed and signed)
- Subcontracting/Sub-Consulting Utilization Plan (completed)

☐ **I intend to use NON-CERTIFIED Subcontractor/Sub-Consultant(s) after performing Good Faith Efforts.**

Instructions: Offerors may use Subcontractors that ARE NOT City of Austin certified M/WBE firms ONLY after Offerors have first demonstrated Good Faith Efforts to provide subcontracting opportunities to City of Austin M/WBE firms.

STEP ONE: Contact SMBR for an availability list for the scope(s) of work you wish to subcontract;
STEP TWO: Perform Good Faith Efforts (Check List provided below);
STEP THREE: Offerors shall insert the name(s) of their certified or non-certified Subcontractor(s) into the table below and must include the following documents in their sealed Offer:

- Subcontracting/Sub-Consulting Utilization Form (completed and signed)
- Subcontracting/Sub-Consulting Utilization Plan (completed)
- All required documentation demonstrating the Offeror's performance of Good Faith Efforts (see Check List below)

GOOD FAITH EFFORTS CHECK LIST –

When using NON-CERTIFIED Subcontractor/Sub-consultants(s), **ALL of the following CHECK BOXES MUST be completed in order to meet and comply with the Good Faith Effort requirements and all documentation must be included in your sealed Offer. Documentation CANNOT be added or changed after submission of the bid.**

☐ **Contact SMBR.** Offerors shall contact SMBR (512-974-7600 or SMBRComplianceDocuments@austintexas.gov) to obtain a list of City of Austin certified M/WBE firms that are certified to provide the goods and services the Offeror intends to subcontract out. (Availability List). Offerors shall document their contact(s) with SMBR in the "SMBR Contact Information" table on the following page.

☐ **Contact M/WBE firms.** Offerors shall contact all of the M/WBE firms on the Availability List with a Significant Local Business Presence which is the Austin Metropolitan Statistical Area, to provide information on the proposed goods and services proposed to be subcontracted and give the Subcontractor the opportunity to respond on their interest to bid on the proposed scope of work. When making the contacts, Offerors shall use at least two (2) of the following communication methods: email, fax, US mail or phone. Offerors shall give the contacted M/WBE firms at least seven days to respond with their interest. Offerors shall document all evidence of their contact(s) including: emails, fax confirmations, proof of mail delivery, and/or phone logs. These documents shall show the date(s) of contact, company contacted, phone number, and contact person.

MINORITY- AND WOMEN-OWNED BUSINESS ENTERPRISE (MBE/WBE)
PROCUREMENT PROGRAM
Subcontracting/Sub-Consulting ("Subcontractor") Utilization Plan

SOLICITATION NUMBER: SOLICITATION TITLE:

☐ **Follow up with responding M/WBE firms.** Offeror shall follow up with all M/WBE firms that respond to the Offeror's request. Offerors shall provide written evidence of their contact(s): emails, fax confirmations, proof of mail delivery, and/or phone logs. These documents shall show the date(s) of contact, company contacted, phone number, and contact person.

☐ **Advertise**. Offerors shall place an advertisement of the subcontracting opportunity in a local publication (i.e. newspaper, minority or women organizations, or electronic/social media). Offerors shall include a copy of their advertisement, including the name of the local publication and the date the advertisement was published.

☐ **Use a Community Organization.** Offerors shall solicit the services of a community organization(s); minority persons/women contractors'/trade group(s); local, state, and federal minority persons/women business assistance office(s); and other organizations to help solicit M/WBE firms. Offerors shall provide written evidence of their Proof of contact(s) include: emails, fax confirmations, proof of mail delivery, and/or phone logs. These documents shall show the date(s) of contact, organization contacted, phone number, email address and contact person.

MINORITY- AND WOMEN-OWNED BUSINESS ENTERPRISE (MBE/WBE)
PROCUREMENT PROGRAM
Subcontracting/Sub-Consulting ("Subcontractor") Utilization Plan

SOLICITATION NUMBER:
SOLICITATION TITLE:

(Offerors may duplicate this page to add additional Subcontractors as needed)

Subcontractor/Sub-consultant		
City of Austin Certified	☐ MBE ☐ WBE Ethnic/Gender Code:	☐ NON-CERTIFIED
Company Name		
Vendor ID Code		
Contact Person	Phone Number:	
Additional Contact Info	Fax Number:	E-mail:
Amount of Subcontract	$	
List commodity codes & description of services		
Justification for not utilizing a certified MBE/WBE		

Subcontractor/Sub-consultant		
City of Austin Certified	☐ MBE ☐ WBE Ethnic/Gender Code:	☐ NON-CERTIFIED
Company Name		
Vendor ID Code		
Contact Person	Phone Number:	
Additional Contact Info	Fax Number:	E-mail:
Amount of Subcontract	$	
List commodity codes & description of services		
Justification for not utilizing a certified MBE/WBE		

SMBR Contact Information			
SMBR Contact Name	**Contact Date**	**Means of Contact**	**Reason for Contact**
		☐ Phone **OR** ☐ Email	

FOR SMALL AND MINORITY BUSINESS RESOURCES DEPARTMENT USE ONLY:

Having reviewed this plan, I acknowledge that the Offeror ☐ HAS or ☐ HAS NOT complied with these instructions and City Code Chapters 2-9A/B/C/D, as amended.

_____ _____

Reviewing Counselor Date

I have reviewed the completing the Subcontracting/Sub-Consultant Utilization Plan and ☐ Concur ☐ Do Not Concur with the Reviewing Counselor's recommendation.

_____ _____

Director/Assistant Director or Designee Date