CITY OF AUSTIN, TEXAS

Purchasing Office

REQUEST FOR PROPOSAL (RFP)

OFFER SHEET

SOLICITATION NO: RMJ0304

DATE ISSUED: September 21, 2015

COMMODITY/SERVICE DESCRIPTION: Three-Phase Power Transformers

REQUISITION NO.: RQM 1100 15082700502

COMMODITY CODE: 2858673

PRE-PROPOSAL CONFERENCE TIME AND DATE: October 1, 2015 at 2:00pm

LOCATION: Kramer Lane Service Center – Austin Energy
2526 Kramer Lane, Assembly Room # 200, Austin, Texas 78758

FOR CONTRACTUAL AND TECHNICAL ISSUES CONTACT THE FOLLOWING AUTHORIZED CONTACT PERSON:

Ray Moncada
Senior Buyer Specialist

Phone: (512) 322-6594
E-Mail: ray.moncada@austinenergy.com

PROPOSAL DUE PRIOR TO: October 30, 2015 at 2:00pm

PROPOSAL CLOSING TIME AND DATE: October 30, 2015 at 2:00pm

LOCATION: MUNICIPAL BUILDING, 124 W 8th STREET
RM 308, AUSTIN, TEXAS 78701

When submitting a sealed Offer and/or Compliance Plan, use the proper address for the type of service desired, as shown below:

Address for US Mail (Only)	Address for Fedex, UPS, Hand Delivery or Courier Service
City of Austin	City of Austin, Municipal Building
Purchasing Office-Response Enclosed for Solicitation # RMJ0304	Purchasing Office-Response Enclosed for Solicitation # RMJ0304
P.O. Box 1088	124 W 8th Street, Rm 308
Austin, Texas 78767-8845	Austin, Texas 78701
	Reception Phone: (512) 974-2500

NOTE: Offers must be received and time stamped in the Purchasing Office prior to the Due Date and Time. It is the responsibility of the Offeror to ensure that their Offer arrives at the receptionist's desk in the Purchasing Office prior to the time and date indicated. Arrival at the City's mailroom, mail terminal, or post office box will not constitute the Offer arriving on time. See Section 0200 for additional solicitation instructions.

All Offers (including Compliance Plans) that are not submitted in a sealed envelope or container will not be considered.

SUBMIT 1 ORIGINAL, 4 COPIES, AND 1 ELECTRONIC COPY (CD/FLASH) OF YOUR RESPONSE

*****SIGNATURE FOR SUBMITTAL REQUIRED ON PAGE 3 OF THIS DOCUMENT*****

This solicitation is comprised of the following required sections. Please ensure to carefully read each section including those incorporated by reference. By signing this document, you are agreeing to all the items contained herein and will be bound to all terms.

SECTION NO.	TITLE	PAGES
0100	STANDARD PURCHASE DEFINITIONS	*
0200	STANDARD SOLICITATION INSTRUCTIONS	*
0300	STANDARD PURCHASE TERMS AND CONDITIONS	*
0400	SUPPLEMENTAL PURCHASE PROVISIONS	7
0500	SCOPE OF WORK	6
0505	SPECIFICATIONS & ATTACHMENTS	102
0600	PROPOSAL PREPARATION INSTRUCTIONS & EVALUATION FACTORS	6
0605	LOCAL BUSINESS PRESENCE IDENTIFICATION FORM – Complete and return	2
0700	REFERENCE SHEET – Complete and return if required	2
0800	NON-DISCRIMINATION CERTIFICATION	*
0805	NON-SUSPENSION OR DEBARMENT CERTIFICATION	*
0810	NON-COLLUSION, NON-CONFLICT OF INTEREST, AND ANTI-LOBBYING CERTIFICATION	*
0835	NONRESIDENT BIDDER PROVISIONS – Complete and return	1
0900	MBE/WBE PROCUREMENT PROGRAM PACKAGE NO GOALS FORM – Complete & return	2

*** Documents are hereby incorporated into this Solicitation by reference, with the same force and effect as if they were incorporated in full text. The full text versions of these Sections are available, on the Internet at the following online address:**

http://www.austintexas.gov/financeonline/vendor_connection/index.cfm#STANDARDBIDDOCUMENTS

If you do not have access to the Internet, you may obtain a copy of these Sections from the City of Austin Purchasing Office located in the Municipal Building, 124 West 8th Street, Room #308 Austin, Texas 78701; phone (512) 974-2500. Please have the Solicitation number available so that the staff can select the proper documents. These documents can be mailed, expressed mailed, or faxed to you.

The undersigned, by his/her signature, represents that he/she is submitting a binding offer and is authorized to bind the respondent to fully comply with the solicitation document contained herein. The Respondent, by submitting and signing below, acknowledges that he/she has received and read the entire document packet sections defined above including all documents incorporated by reference, and agrees to be bound by the terms therein.

Company Name: _____

Company Address: _____

City, State, Zip: _____

Federal Tax ID No. _____

Printed Name of Officer or Authorized Representative: _____

Title: _____

Signature of Officer or Authorized Representative: _____

Date: _____

Email Address: _____

Phone Number: _____

*** Proposal response must be submitted with this Offer sheet to be considered for award**

Section 0605: Local Business Presence Identification

A firm (Offeror or Subcontractor) is considered to have a Local Business Presence if the firm is headquartered in the Austin Corporate City Limits, or has a branch office located in the Austin Corporate City Limits in operation for the last five (5) years, currently employs residents of the City of Austin, Texas, and will use employees that reside in the City of Austin, Texas, to support this Contract. The City defines headquarters as the administrative center where most of the important functions and full responsibility for managing and coordinating the business activities of the firm are located. The City defines branch office as a smaller, remotely located office that is separate from a firm's headquarters that offers the services requested and required under this solicitation.

OFFEROR MUST SUBMIT THE FOLLOWING INFORMATION FOR EACH LOCAL BUSINESS (INCLUDING THE OFFEROR, IF APPLICABLE) TO BE CONSIDERED FOR LOCAL PRESENCE.

NOTE: ALL FIRMS MUST BE IDENTIFIED ON THE MBE/WBE COMPLIANCE PLAN OR NO GOALS UTILIZATION PLAN (REFERENCE SECTION 0900).

USE ADDITIONAL PAGES AS NECESSARY

OFFEROR:

Name of Local Firm		
Physical Address		
Is your headquarters located in the Corporate City Limits? (circle one)	Yes	No
or		
Has your branch office been located in the Corporate City Limits for the last 5 years?		
Will your business be providing additional economic development opportunities created by the contract award? (e.g., hiring, or employing residents of the City of Austin or increasing tax revenue?)	Yes	No

SUBCONTRACTOR(S):

Name of Local Firm		
Physical Address		
Is your headquarters located in the Corporate City Limits? (circle one)	Yes	No
or		
Has your branch office been located in the Corporate City Limits for the last 5 years	Yes	No

Will your business be providing additional economic development opportunities created by the contract award? (e.g., hiring, or employing residents of the City of Austin or increasing tax revenue?)	Yes	No

SUBCONTRACTOR(S):

Name of Local Firm		
Physical Address		
Is your headquarters located in the Corporate City Limits? (circle one)	Yes	No
or		
Has your branch office been located in the Corporate City Limits for the last 5 years	Yes	No
Will your business be providing additional economic development opportunities created by the contract award? (e.g., hiring, or employing residents of the City of Austin or increasing tax revenue?)	Yes	No

Section 0700: Reference Sheet

Please include the following information if required in the solicitation:

Responding Company Name _____

1. Company's Name _____

   Name and Title of Contact _____

   Present Address _____

   City, State, Zip Code _____

   Telephone Number (_____)_____ Fax Number (_____)_____

   Email Address _____

2. Company's Name _____

   Name and Title of Contact _____

   Present Address _____

   City, State, Zip Code _____

   Telephone Number (_____)_____ Fax Number (_____)_____

   Email Address _____

3. Company's Name _____

   Name and Title of Contact _____

   Present Address _____

   City, State, Zip Code _____

   Telephone Number (_____)_____ Fax Number (_____)_____

   Email Address _____

4. Company's Name _____

Name and Title of Contact _____

Present Address _____

City, State, Zip Code _____

Telephone Number (_____)_____ Fax Number (_____)_____

Email Address _____

5. Company's Name _____

Name and Title of Contact _____

Present Address _____

City, State, Zip Code _____

Telephone Number (_____)_____ Fax Number (_____)_____

Email Address _____

Section 0835: Non-Resident Bidder Provisions

Company Name _____

A. Bidder must answer the following questions in accordance with Vernon's Texas Statues and Codes Annotated Government Code 2252.002, as amended:

   Is the Bidder that is making and submitting this Bid a "Resident Bidder" or a "non-resident Bidder"?

   Answer: _____

   (1) Texas Resident Bidder- A Bidder whose principle place of business is in Texas and includes a Contractor whose ultimate parent company or majority owner has its principal place of business in Texas.
   (2) Nonresident Bidder- A Bidder who is not a Texas Resident Bidder.

B. If the Bidder id a "Nonresident Bidder" does the state, in which the Nonresident Bidder's principal place of business is located, have a law requiring a Nonresident Bidder of that state to bid a certain amount or percentage under the Bid of a Resident Bidder of that state in order for the nonresident Bidder of that state to be awarded a Contract on such bid in said state?

   Answer: _____ Which State: _____

C. If the answer to Question B is "yes", then what amount or percentage must a Texas Resident Bidder bid under the bid price of a Resident Bidder of that state in order to be awarded a Contract on such bid in said state?

   Answer: _____

Section 0900: Minority- and Women-Owned Business Enterprise (MBE/WBE) Procurement Program No Goals Form

SOLICITATION NUMBER:
PROJECT NAME:

The City of Austin has determined that no goals are appropriate for this project. Even though goals were not assigned for this solicitation, the Bidder/Proposer is required to comply with the City's MBE/WBE Procurement Program, if areas of subcontracting are identified.

If any service is needed to perform the Contract and the Bidder/Proposer does not perform the service with its own workforce or if supplies or materials are required and the Bidder/Proposer does not have the supplies or materials in its inventory, the Bidder/Proposer shall contact the Small and Minority Business Resources Department (SMBR) at (512) 974-7600 to obtain a list of MBE and WBE firms available to perform the service or provide the supplies or materials. The Bidder/Proposer must also make a Good Faith Effort to use available MBE and WBE firms. Good Faith Efforts include but are not limited to contacting the listed MBE and WBE firms to solicit their interest in performing on the Contract, using MBE and WBE firms that have shown an interest, meet qualifications, and are competitive in the market; and documenting the results of the contacts.

Will subcontractors or sub-consultants or suppliers be used to perform portions of this Contract?

No	_____	**If no, please sign the No Goals Form and submit it with your Bid/Proposal in a sealed envelope**
Yes	_____	**If yes, please contact SMBR to obtain further instructions and an availability list and perform Good Faith Efforts. Complete and submit the No Goals Form and the No Goals Utilization Plan with your Bid/Proposal in a sealed envelope.**

After Contract award, if your firm subcontracts any portion of the Contract, it is a requirement to complete Good Faith Efforts and the No Goals Utilization Plan, listing any subcontractor, sub-consultant, or supplier. Return the completed Plan to the Project Manager or the Contract Manager.

I understand that even though goals were not assigned, I must comply with the City's MBE/WBE Procurement Program if subcontracting areas are identified. I agree that this No Goals Form and No Goals Utilization Plan shall become a part of my Contract with the City of Austin.	
Company Name	
Name and Title of Authorized Representative (Print or Type)	
Signature	**Date**

Minority- and Women-Owned Business Enterprise (MBE/WBE) Procurement Program No Goals Utilization Plan
(Please duplicate as needed)

SOLICITATION NUMBER:
PROJECT NAME:

PRIME CONTRACTOR / CONSULTANT COMPANY INFORMATION

Name of Contractor/Consultant			
Address			
City, State Zip			
Phone Number		Fax Number	
Name of Contact Person			
Is Company City certified?	Yes ☐ No ☐ MBE ☐ WBE ☐ MBE/WBE Joint Venture ☐		

I certify that the information included in this No Goals Utilization Plan is true and complete to the best of my knowledge and belief. I further understand and agree that the information in this document shall become part of my Contract with the City of Austin.

_____
Name and Title of Authorized Representative (Print or Type)

_____ _____
Signature **Date**

Provide a list of all proposed subcontractors / sub-consultants / suppliers that will be used in the performance of this Contract. **Attach Good Faith Effort documentation if non MBE/WBE firms will be used.**

Sub-Contractor / Sub-Consultant			
City of Austin Certified	MBE ☐ WBE ☐ Ethics / Gender Code: ☐ Non-Certified		
Vendor ID Code			
Contact Person		Phone Number	
Amount of Subcontract	$		
List commodity codes & description of services			

Sub-Contractor / Sub-Consultant			
City of Austin Certified	MBE ☐ WBE ☐ Ethics / Gender Code: ☐ Non-Certified		
Vendor ID Code			
Contact Person		Phone Number	
Amount of Subcontract	$		
List commodity codes & description of services			

FOR SMALL AND MINORITY BUSINESS RESOURCES DEPARTMENT USE ONLY:

Having reviewed this plan, I acknowledge that the proposer (HAS) or (HAS NOT) complied with City Code Chapter 2-9A/B/C/D, as amended.

Reviewing Counselor _____ **Date** _____ **Director/Deputy Director** _____ **Date** _____

CITY OF AUSTIN
PURCHASING OFFICE
SUPPLEMENTAL PURCHASE PROVISIONS
SOLICITATION NUMBER: RMJ0304

The following Supplemental Purchasing Provisions apply to this solicitation:

1. **EXPLANATIONS OR CLARIFICATIONS:** (reference paragraph 5 in Section 0200)

   All requests for explanations or clarifications must be submitted in writing to Ray Moncada in the Purchasing Office by 8:00 AM (CST), October 6, 2015. Submission may be made via e-mail to: ray.moncada@austinenergy.com or via fax at (512) 322-6174.

2. **INSURANCE:** Insurance is required for this solicitation.

   A. **General Requirements:** See Section 0300, Standard Purchase Terms and Conditions, paragraph 32, entitled Insurance, for general insurance requirements.

      i. The Contractor shall provide a Certificate of Insurance as verification of coverages required below to the City at the below address prior to contract execution and within 14 calendar days after written request from the City. Failure to provide the required Certificate of Insurance may subject the Offer to disqualification from consideration for award
      ii. The Contractor shall not commence work until the required insurance is obtained and until such insurance has been reviewed by the City. Approval of insurance by the City shall not relieve or decrease the liability of the Contractor hereunder and shall not be construed to be a limitation of liability on the part of the Contractor.
      iii. The Contractor must also forward a Certificate of Insurance to the City whenever a previously identified policy period has expired, or an extension option or holdover period is exercised, as verification of continuing coverage.
      iv. The Certificate of Insurance, and updates, shall be mailed to the following address:

         City of Austin Purchasing Office
         P. O. Box 1088
         Austin, Texas 78767

   B. **Specific Coverage Requirements:** The Contractor shall at a minimum carry insurance in the types and amounts indicated below for the duration of the Contract, including extension options and hold over periods, and during any warranty period. These insurance coverages are required minimums and are not intended to limit the responsibility or liability of the Contractor.

      i. **Worker's Compensation and Employers' Liability Insurance:** Coverage shall be consistent with statutory benefits outlined in the Texas Worker's Compensation Act (Section 401). The minimum policy limits for Employer's Liability are **$1,000,000** bodily injury each accident, **$1,000,000** bodily injury by disease policy limit and **$1,000,000** bodily injury by disease each employee.
         (1) The Contractor's policy shall apply to the State of Texas and include these endorsements in favor of the City of Austin:
            (a) Waiver of Subrogation, Form WC420304, or equivalent coverage
            (b) Thirty (30) days Notice of Cancellation, Form WC420601, or equivalent coverage
      ii. **Commercial General Liability Insurance:** The minimum bodily injury and property damage per occurrence are **$1,000,000** for coverages A (Bodily Injury and Property Damage) and B (Personal and Advertising Injury).
         (1) The policy shall contain the following provisions:
            (a) Contractual liability coverage for liability assumed under the Contract and all other Contracts related to the project.
            (b) Contractor/Subcontracted Work.
            (c) Products/Completed Operations Liability for the duration of the warranty period.

(d) If the project involves digging or drilling provisions must be included that provide Explosion, Collapse, and/or Underground Coverage.

(2) The policy shall also include these endorsements in favor of the City of Austin:

(a) Waiver of Subrogation, Endorsement CG 2404, or equivalent coverage

(b) Thirty (30) days Notice of Cancellation, Endorsement CG 0205, or equivalent coverage

(c) The City of Austin listed as an additional insured, Endorsement CG 2010, or equivalent coverage

iii. **Business Automobile Liability Insurance:** The Contractor shall provide coverage for all owned, non-owned and hired vehicles with a minimum combined single limit of **$1,000,000** per occurrence for bodily injury and property damage.

(1) The policy shall include these endorsements in favor of the City of Austin:

(a) Waiver of Subrogation, Endorsement CA0444, or equivalent coverage

(b) Thirty (30) days Notice of Cancellation, Endorsement CA0244, or equivalent coverage

(c) The City of Austin listed as an additional insured, Endorsement CA2048, or equivalent coverage.

iv. **Professional Liability:**

The Contractor shall provide coverage, at a minimum limit of **$3,000,000** per claim, to pay on behalf of the assured all sums which the assured shall become legally obligated to pay as damages by reason of any negligent act, error, or omission arising out of the performance of professional services under this Agreement.

If coverage is written on a claims-made basis, the retroactive date shall be prior to or coincident with the date of the Contract and the certificate of insurance shall state that the coverage is claims-made and indicate the retroactive date. This coverage shall be continuous and will be provided for twenty-four (24) months following the completion of the contract.

v. **Property Insurance:** For City of Austin property/equipment in the care, custody and control of the Contractor, the Contractor shall provide All Risk Property coverage including, but not limited to fire, wind, hail, theft, vandalism and malicious mischief. This policy shall be written in an amount no less than **$1,000,000**. If applicable, Transit coverage shall also be provided. The City of Austin shall be added to the property policy as a Loss Payee as their interest may appear.

C. **Endorsements:** The specific insurance coverage endorsements specified above, or their equivalents must be provided. In the event that endorsements, which are the equivalent of the required coverage, are proposed to be substituted for the required coverage, copies of the equivalent endorsements must be provided for the City's review and approval.

3. **PAYMENT BOND:**

A. The Contractor shall provide a Payment Bond in an amount equal to **50%** of the annual Contract amount within 14 calendar days (14 unless a different period is inserted) after notification of award. The Payment Bond serves as security for the faithful payment of all of the Contractor's obligations for subcontracts, work, labor, equipment, supplies, and materials furnished under the Contract. The Payment Bond shall be issued by a solvent company authorized to do business in the State of Texas, and shall meet any other requirements established by law or by the City pursuant to applicable law. The Surety must obtain reinsurance for any portion of the risk that exceeds 10% of the Surety's capital and surplus. For bonds exceeding $100,000, the Surety must also hold a certificate of authority from the U.S. Secretary of the Treasury or have obtained reinsurance from a reinsurer that is authorized as a reinsurer in Texas and holds a certificate of authority from the U.S. Secretary of the Treasury.

B. The Payment Bond shall remain in effect throughout the term of the Contract, and shall be renewed for each respective extension.

4. **PERFORMANCE BOND:**

A. The Contractor shall provide a Performance Bond in an amount equal to **50%** of the annual Contract amount within 14 calendar days after notification of award. The Performance Bond serves as security for the faithful performance of all of the Contractor's obligations under the Contract. The Performance Bond shall be issued by a solvent company authorized to do business in the State of Texas, and shall meet any other requirements established by law or by the City pursuant to applicable law. The Surety must obtain reinsurance for any portion of the risk that exceeds 10% of the Surety's capital and surplus. For bonds exceeding $100,000, the Surety must also hold a certificate of authority from the U.S. Secretary of the Treasury or have obtained reinsurance from a reinsurer that is authorized as a reinsurer in Texas and holds a certificate of authority from the U.S. Secretary of the Treasury.

B. The Performance Bond shall remain in effect throughout the term of the Contract and shall be renewed for each respective extension.

5. **TERM OF CONTRACT:**

A. The Contract shall be in effect for an initial term of twelve (12) months and may be extended thereafter for up to an additional five (5) twelve (12) month periods, subject to the approval of the Contractor and the City Purchasing Officer or his designee.

B. Upon expiration of the initial term or period of extension, the Contractor agrees to hold over under the terms and conditions of this agreement for such a period of time as is reasonably necessary to re-solicit and/or complete the project (not to exceed 120 days unless mutually agreed on in writing).

C. Upon written notice to the Contractor from the City's Purchasing Officer or his designee and acceptance of the Contractor, the term of this contract shall be extended on the same terms and conditions for an additional period as indicated in paragraph A above.

D. Prices are firm and fixed for the first twelve (12) months. Thereafter, price changes are subject to the Economic Price Adjustment provisions of this Contract.

6. **QUANTITIES:** The quantities listed herein are annual estimates for the period of the Contract. The City reserves the right to purchase more or less of these quantities as may be required during the Contract term. Quantities will be as needed and specified by the City for each order. Unless specified in the solicitation, there are no minimum order quantities.

7. **INVOICES and PAYMENT:** (reference paragraphs 12 and 13 in Section 0300)

A. Invoices shall contain a unique invoice number and the information required in Section 0300, paragraph 12, entitled "Invoices." Invoices received without all required information cannot be processed and will be returned to the vendor.

Invoices shall be mailed to the below address:

	City of Austin
Department	Austin Energy - City of Austin
Attn:	Equipment and Materials Engineering Supervisor

Address	2526 Kramer Lane Building "E"
City, State Zip Code	Austin, Texas 78758

B. The Contractor agrees to accept payment either by, credit card, check or Electronic Funds Transfer (EFT) for all goods and/or services provided under the Contract. The Contractor shall factor the cost of processing credit card payments into the Offer. There shall be no additional charges, surcharges, or penalties to the City for payments made by credit card.

8. **WARRANTY:**

Warranty period shall be at least five (5) years from the date of final acceptance of the deliverables or from the date of acceptance of any replacement deliverables. All other terms of the Warranty as stated in the Standard Purchase Terms and Conditions (Section 0300, paragraph 21) shall remain the same. If Contractor deems it necessary to repair at the factory, warranty shall include **freight** and **insurance** from the Austin Energy facility site to the Contractor facility, and return of deliverable to the Austin Energy facility site. During the warranty period, Contractor shall deliver replacement parts within seven (7) days of a claim by the City.

9. **LIQUIDATED DAMAGES:**

Time is of the essence in the performance of the Contract; therefore, the Contractor shall strictly adhere to the Contract delivery schedule. No changes in the delivery schedule shall be effective unless in writing executed by both the City and the Contractor. The parties agree that if, due to no fault of the City, delivery of any material or performance of any service is delayed beyond the time specified in the Contract, the actual damages sustained by the City because of such delay will be uncertain and difficult to determine, and that the reasonable foreseeable damage incurred by the City is hereby stipulated to be $5,000 per calendar day. The Contractor therefore agrees to pay, and the City agrees to accept, as liquidated damages, the sum of $5,000 per calendar day for each calendar day of delay. In the event delays exceed thirty (30) calendar days, the City may deem the delay a Default as defined in Section 0300, paragraph 26, entitled Default.

10. **NON-COLLUSION, NON-CONFLICT OF INTEREST, AND ANTI-LOBBYING:**

A. On November 10, 2011, the Austin City Council adopted Ordinance No. 20111110-052 amending Chapter 2.7, Article 6 of the City Code relating to Anti-Lobbying and Procurement. The policy defined in this Code applies to Solicitations for goods and/or services requiring City Council approval under City Charter Article VII, Section 15 (Purchase Procedures). During the No-Contact Period, Offerors or potential Offerors are prohibited from making a representation to anyone other than the Authorized Contact Person in the Solicitation as the contact for questions and comments regarding the Solicitation.

B. If during the No-Contact Period an Offeror makes a representation to anyone other than the Authorized Contact Person for the Solicitation, the Offeror's Offer is disqualified from further consideration except as permitted in the Ordinance.

C. If an Offeror has been disqualified under this article more than two times in a sixty (60) month period, the Purchasing Officer shall debar the Offeror from doing business with the City for a period not to exceed three (3) years, provided the Offeror is given written notice and a hearing in advance of the debarment.

D. The City requires Offerors submitting Offers on this Solicitation to certify that the Offeror has not in any way directly or indirectly made representations to anyone other than the Authorized Contact Person during the No-Contact Period as defined in the Ordinance. The text of the City Ordinance is posted on the Internet at: http://www.ci.austin.tx.us/edims/document.cfm?id=161145

11. **WORKFORCE SECURITY CLEARANCE AND IDENTIFICATION (ID):**

A. Access to the Austin Energy Facility Site for delivery and installation of the deliverables by the Contractor, and any/ all subcontractors and their employees will be strictly controlled at all times by the City. Security badges will be issued by the Department for this purpose. The Contractor shall submit a complete list of all persons requiring access to the delivery site at least thirty (30) days in advance of their need for access. The City reserves the right to deny a security badge to any Contractor personnel for reasonable cause. The City will notify the Contractor of any such denial no more than twenty (20) days after receipt of the Contractor's submittal.

B. Where denial of access by a particular person may cause the Contractor to be unable to perform any portion of the work of the contract, the Contractor shall so notify the City's Project Manager, in writing, within ten (10) days of the receipt of notification of denial.

C. Contractor personnel will be required to check in when entering or leaving the delivery site location and security badges must be on display at all times when at the Austin Energy facility. Failure to do so may be cause for removal of Contractor Personnel from the worksite, without regard to Contractor's schedule. Security badges may not be removed from the premises.

D. The Contractor shall provide the City's Project and Contract Compliance Manager's with a list of personnel scheduled to enter the site, seven days in advance. The list shall identify the persons by name, date of birth, driver's license number, the times that they will be inside the site and the areas where they will be working. Only persons previously approved by the City for the issuance of security badges will be admitted to the site.

E. The Contractor shall comply with all other security requirements imposed by the City and shall ensure that all employees and subcontractors are kept fully informed as to these requirements.

12. **ECONOMIC PRICE ADJUSTMENT:**

A. **Price Adjustments:** Prices shown in this Contract shall remain firm for the first twelve (12) months of the Contract. After that, in recognition of the potential for fluctuation of the Contractor's cost, a price adjustment (increase or decrease) may be requested by either the City or the Contractor on the anniversary date of the Contract or as may otherwise be specified herein. The percentage change between the contract price and the requested price shall not exceed the percentage change between the specified index in effect on the date the solicitation closed and the most recent, non-preliminary data at the time the price adjustment is requested. The requested price adjustment shall not exceed ten percent (10%) for any single line item and in no event shall the total amount of the contract be automatically adjusted as a result of the change in one or more line items made pursuant to this provision. Prices for products or services unaffected by verifiable cost trends shall not be subject to adjustment.

B. **Effective Date:** Approved price adjustments will go into effect on the first day of the upcoming renewal period or anniversary date of contract award and remain in effect until contract expiration unless changed by subsequent amendment.

C. **Adjustments:** A request for price adjustment must be made in writing and submitted to the other Party prior to the yearly anniversary date of the Contract; adjustments may only be considered at that time unless otherwise specified herein. Requested adjustments must be solely for the purpose of accommodating changes in the Contractor's direct costs. Contractor shall provide an updated price listing once agreed to adjustment(s) have been approved by the parties.

D. **Indexes:** In most cases an index from the Bureau of Labor Standards (BLS) will be utilized; however, if there is more appropriate, industry recognized standard then that index may be selected.

i. The following definitions apply:
(1) **Base Period:** Month and year of the original contracted price (the solicitation close date).
(2) **Base Price:** Initial price quoted, proposed and/or contracted per unit of measure.
(3) **Adjusted Price:** Base Price after it has been adjusted in accordance with the applicable index change and instructions provided.
(4) **Change Factor:** The multiplier utilized to adjust the Base Price to the Adjusted Price.
(5) **Weight %:** The percent of the Base Price subject to adjustment based on an index change.

ii. **Adjustment-Request Review:** Each adjustment-request received will be reviewed and compared to changes in the index(es) identified below. Where applicable:
(1) Utilize final Compilation data instead of Preliminary data
(2) If the referenced index is no longer available shift up to the next higher category index.

iii. **Index Identification:** Complete table as they may apply.

Weight % or $ of Base Price: 50%	
Database Name: Producer Price Index	
Series ID: WPU117409	
☒ Not Seasonally Adjusted	☐ Seasonally Adjusted
Geographical Area: N/A	
Description of Series ID: Machinery & Equipment - Power and Distribution Transformers, Except Parts	
This Index shall apply to the following items of the Price Proposal: 1-6	

Weight % or $ of Base Price: 50%	
Database Name: Producer Price Index	
Series ID: WPU117411	
☒ Not Seasonally Adjusted	☐ Seasonally Adjusted
Geographical Area: N/A	
Description of Series ID: Machinery & Equipment – Other Transformers and Parts for Transformers	
This Index shall apply to the following items of the Price Proposal: 7-8	

E. **Calculation:** Price adjustment will be calculated as follows:

Single Index: Adjust the Base Price by the same factor calculated for the index change.

Index at time of calculation
Divided by index on solicitation close date
Equals Change Factor
Multiplied by the Base Rate
Equals the Adjusted Price

F. If the requested adjustment is not supported by the referenced index, the City, at its sole discretion, may consider approving an adjustment on fully documented market increases.

13. **WORKING ON OR NEAR ENGERGIZED EQUIPMENT – ARC FLASH PROTECTION (reference Section 0300 Paragraph 11. Compliance With Health, Safety, and Environmental Regulations):**

Contractor's employees shall wear at all times the proper personal protective equipment and clothing required for the head, face, torso, arms, hands, and lower body that provides a minimum Arc Thermal Protection Value (ATPV) of 12 calories per square centimeter (cal/cm^2) when working on or near energized electrical equipment, or greater, if required by the NFPA Standard 70E and/or Article 410 of the NESC for the work being performed.

14. **SAFETY:** The Contractor shall also be responsible for strictly complying with all OSHA, City of Austin, and Austin Energy safety rules and regulations. The Contractor shall be responsible for ensuring that all subcontractors comply with OSHA, City of Austin, and Austin Energy safety rules and regulations. This includes use of all required safety equipment such as hard hats, safety harnesses, safety eyewear, and steel toe footwear. Exceptions will not be allowed.

15. **PROJECT MANAGER:** The following person is designated as Project Manager, and will act as the contact point between the City and the Contractor during the term of the Contract for all technical and scope of work issues:

City of Austin - Austin Energy
Martha Vela de Casillas
2526 Kramer Lane Bldg. "E"
Austin, Texas 78758

Phone : 512-505-7027 Fax: 512-505-7004
Martha.Casillas@austinenergy.com

16. **CONTRACT COMPLIANCE:** The following person is designated as Contract Compliance Manager, and will act as the contact point between the City and the Contractor during the term of the Contract for financial, Contract interpretation and Contract compliance issues:

City of Austin - Austin Energy
Attn: James R. "Ron" Ayers,
Manager Contract Compliance
721 Barton Springs Road
Austin, Texas 78704
Office: 512-322-6059; Cell: 512-917-8513
Ron.ayers@austinenergy.com

*Note: The above listed Project Manager and Contract Compliance Manager are not the authorized Contact Person for purposes of the **NON-COLLUSION, NON-CONFLICT OF INTEREST, AND ANTI-LOBBYING Provision** of this Section; and therefore, contact with the Project Manager and Contract Compliance Manager are prohibited during the no contact period.

Scope of Work

SOLICITATION NO. RMJ0304

Description: 138kV – 12.47 kV THREE PHASE POWER TRANSFORMERS
18/24/30 MVA; 24/32/40 MVA; 30/40/50 MVA; 40/53/67 MVA
and
138kV x 69kV -12.47 kV, 18/24/30 MVA THREE PHASE POWER TRANSFORMERS
and
138kV x 69kV - 35 kV, 42/56/70 MVA THREE PHASE POWER TRANSFORMERS

1.0 Purpose

The purpose of this Request for Proposal (RFP) is to solicit a supply agreement to procure Three-Phase Power Transformers for the Austin Energy Substations from qualified manufactures and/or distributors along with their manufacturers, herein referred to as Contractors. Power transformers are used in Substations to step down the transmission voltage to a distribution voltage.

2.0 Scope of Work:

The following specifications and Tasks shall be complied with in the supply, delivery, inspection, and energizing of the power transformers.

3.0 Specifications

3.1 Transformer Listings and Specification (See Section 0505 CITY OF AUSTIN ELECTRIC UTILITY DEPARTMENT PURCHASE SPECIFICATION FOR 138 - 12.47 kV 30, 40, 50 OR 67 MVA THREE PHASE POWER TRANSFORMER)

3.1.1 138kV- 12.47 kV, 18/24/30 MVA Power Transformer in accordance with City of Austin Electric Utility (AEU) Purchase Specification E-0815, dated 07/02/2015

3.1.2 138kV- 12.47 kV, 24/32/40 MVA Power Transformer in accordance with City of Austin Electric Utility (AEU) Purchase Specification E-0815, dated 07/02/2015

3.1.3 138kV- 12.47 kV, 30/40/50 MVA Power Transformer in accordance with City of Austin Electric Utility (AEU) Purchase Specification E-0815, dated 07/02/2015

3.1.4 138kV- 12.47 kV, 40/53/67 MVA Power Transformer in accordance with City of Austin Electric Utility (AEU) Purchase Specification E-0815, dated 07/02/2015

3.1.5 138kV x 69kV - 12.47 kV, 18/24/30 MVA Power Transformer in accordance with City of Austin Electric Utility (AEU) Purchase Specification E-0918, dated 07/02/2015

3.1.6 138kV x 69kV - 35 kV, 42/56/70 MVA Power Transformer in accordance with City of Austin Electric Utility (AEU) Purchase Specification E-1762, dated 07/02/2015

3.2 Design Review

3.2.1 Austin Energy shall conduct a design review with the manufacturer ten (10) weeks after Contract is signed in accordance with Attachment VII. Austin Energy shall not issue any Delivery Orders (DO) until the design review is complete and Austin Energy has given concurrence that the design review has been successfully completed.

3.2.2 The Contractor shall be prepared to discuss the gasket and gasket retention system during the design review. The manufacturer shall be prepared to discuss leak rates and durability of the gaskets.

4.0 Service Advisory

The Contractor shall provide copy of service advisories to Austin Energy. Copy of all service advisories shall be sent to:

City of Austin – Austin Energy
Attn: Equipment & Materials Engineering Supervisor
2526 Kramer Lane Bldg. "E"
Austin, Texas 78758

5.0 Shipping

5.1 The Contractor shall be responsible for manufacturing and shipping the transformer such that it will withstand, without damage, all forces encountered during truck, water, or rail shipment. When shipping by rail, the manufacture shall use special cars designed to provide maximum protection from shock. Rail delivery will not be available directly to sites.

5.2 Suitable impact recording devices shall be attached to the shipment for measuring both horizontal and the vertical components of shock. Readings from these impact recorders shall be available to Austin Energy personnel upon receipt of equipment. Calibration data showing that the impact recorders are in proper calibration shall be available to Austin Energy personal at time of receipt of equipment.

5.3 Shipment shall be made F.O.B. destination with full freight allowed and prepaid. The destination shall be on the transformer foundation at the job site. Final Delivery address will be verified upon completion of factory acceptance test. Offloading, assembly and factory recommended testing shall be the responsibility of the Contractor.

5.4 Each unit shall be shipped without oil. The unit shall be filled with dry air at positive pressure. The dry air shall have a dew point reading of - 67.7° C or drier at 20° C ambient temperature.

5.5 Dew Point Instrument

5.5.1 When Austin Energy is present, the dew point shall be taken with Austin Energy dew point instrument. The dew point taken with Austin Energy instrument shall be the official dew point instrument used to determine if additional drying is needed. Austin Energy will provide the manufacture with the dew point instrument calibration data upon request.

5.5.2 Acceptable Dew Point: The acceptable dew point of the transformer shall be less than the allowable maximum dew point value as calculated in the following formula:

Max. dew pt. in °C < [0.75 x (winding temp. in °C – 80)]

5.5.3 Measurement/ Readings Before Shipment

All readings shall be made no earlier than twenty-four (24) hours after the transformer has been assembled for shipment and filled with dry air.

a. The Contractor shall take a dew point reading prior to shipping. The Contractor shall email the results of the dew point measurements and the dew point instrument calibration data to the Contract Manager for approval. The Contractor shall not ship the transformer until written permission from Austin Energy is received.

b. If the dew point taken either by the Contractor is greater than the maximum allowable dew point as determined by the formula in Section 5.5.2; the manufacturer shall perform additional drying before the transformer is shipped.

Austin Energy reserves the right to refuse shipment if the transformer does not meet the specified criteria.

c. The Contractor shall perform a DC core ground resistance measurement prior to shipment but after the bushings are removed. The results of this test shall be reported to Austin Energy single point of contact prior to shipment. The Contractor shall resolve any deficiencies to the satisfaction of Austin Energy.

5.5.4 Measurement/ Readings before off-loading the transformer:

a. All readings shall be made prior to off-loading the transformer.

b. Austin Energy reserves the right to take dew point reading and a DC core ground resistance measurement of the transformer before it is off loaded.

c. Austin Energy will take a dew point reading of the transformer. This measurement will not be taken any later than 8:00 AM. Vacuum processing and filling of the transformer shall not start until a dew point measurement has been obtained. If a dew point measurement taken by Austin Energy is greater the maximum allowable dew point as determined by the formula in Section 5.5.2 above, the Contractor shall perform additional drying before the transformer is filled. The procedure for drying the transformer shall be approved in writing by Austin Energy. Austin Energy reserves the right to refuse the acceptance of the transformer if this approval is not obtained.

d. If additional drying of the transformer is required, the Contractor shall consult with Austin Energy. Once the plan for drying is signed off by Austin Energy, the Contractor may proceed.

5.5.5 The Contractor shall complete the transformer receiving inspection form supplied in the Instruction and Maintenance Manual. A copy of the completed Transformer Receiving Inspection Report shall be mailed to the Contract Manager. Austin Energy designee will be on site for monitoring the receiving of the transformer. Austin Energy designee will review the impact recorder with manufacturer. Austin Energy designee will sign the end of the impact recorder tapes to validate that the review was conducted. Failure of the Contractor to obtain this signature may result in the rejection of the transformer.

5.5.6 Vacuum processing and filling of the transformer shall not start until Austin Energy has taken a dew point reading on the transformer.

5.5.7 The Contractor shall be responsible for packing all parts for shipment so that they will not be damaged and can be stored outside for a reasonable period of time. The manufacturer shall be responsible for and make good any and all damage due to improper preparation or loading for shipment.

5.5.8 The centerline of gravity for the transformer in its shipping arrangement and its completed form shall be indicated on all four (4) sides of the transformer tank.

5.6 Delivery Requirements

5.6.1 Deliveries shall be made Monday through Thursday from 8:00 AM to 3:00 PM. Unless requested by the City, deliveries shall not be made on City-recognized legal holidays (see paragraph 52 in Section 0300).

5.6.2 Delivery destinations shall be transformer foundations at various AE job sites. These destinations shall be specified by the Contract Manger or authorized representative with each purchase. The Contractor shall notify AE seven (7) working days prior to scheduled ship date. AE reserves the right to change the

final destination within five (5) working days prior to required delivery date at no additional cost to AE. Final delivery destination shall be verified upon completion of factory acceptance tests.

5.6.3 Deliveries of any spare or replacement parts shall be made to:

City of Austin – Austin Energy
906 Justin Lane
Austin, Texas 78757

5.6.4 The Contractor (or representative) shall contact the following AE Contact for Delivery at least 48 hours prior to delivery to schedule delivery and again 24 hours prior to delivery to confirm.

AE Contact for Delivery
Richard Smith
Phone: (512) 505-7278
Email: Richard.Smith@austinenergy.com

5.6.5 Delivery shall be complete fully assembled and ready to energize. If installation of the unit will be performed by a sub-contractor, the Contractor shall provide the list of sub-contractors to Austin Energy for review and approval prior to scheduled delivery of the unit. Contractor shall be completely responsible for attaching all external accessories and for all work internal to the transformer such as making up leads, taping, etc not including low side connections to AE switchgear. The Contractor shall also be responsible for vacuum filling, field processing, site cleanup, and disposal of all debris associated with transformer assembly and packing materials. The Contractor shall be responsible for all equipment and material including, but not limited to off- loading equipment, oil tanks, oil, oil processing equipment, vacuum-processing equipment, ladders, boom trucks, debris containers and hand tools. Scheduling for this equipment and work shall be the sole responsibility of the Contractor based on the required date provided by Austin Energy.

5.6.6 The Contractor shall provide qualified on-site supervision. The Contractor shall provide proof of qualified personnel responsible for vacuum filling and field processing.

5.6.7 The Contractor shall be responsible for strictly complying with all City of Austin and Austin Energy spill prevention, control, and containment regulations and guidelines. Exceptions will not be allowed.

5.6.8 The Contractor shall also be responsible for strictly complying with all OSHA, City of Austin, and Austin Energy safety rules and regulations. The Contractor shall be responsible for ensuring that all subcontractors comply with OSHA, City of Austin, and Austin Energy safety rules and regulations. This includes use of all required safety equipment such as hard hats, safety harnesses, safety eyewear, and steel toe footwear. Exceptions will not be allowed.

5.6.9 Austin Energy shall provide the shipping destination with the issuance of purchase order. Austin Energy reserves the right to change the final destination within five (5) working days prior to required delivery date at no additional cost to Austin Energy. The manufacturer shall notify Austin Energy seven (7) working days prior to scheduled ship date.

5.6.10 The Contractor shall provide, with each delivery, shipping or Delivery Ticket showing the description of each item, quantity, and unit price.

5.7 Installation and Testing Requirements:

5.7.1 When the transformer has been vacuum processed and filled with oil, the Contractor shall complete the tests listed below. The final acceptance of the transformer will be based on the results of these tests. If these test limits are not achieved, the manufacturer shall find and correct the problem.

5.7.2 Take a DC core ground resistance measurement. This measurement shall be within the limits specified by the manufacturer in its Instruction and Maintenance Manual.

5.7.3 Make the following insulation power factor measurements of the transformer:

a. 138 kV winding to 12.47 kV winding
b. 138 kV winding to ground
c. 12.47kV winding to ground

5.7.4 The power factor shall be less than 0.5% when corrected to 20° C.

5.7.5 Take C1 and C2 power factor measurements and capacitance measurements of all capacitance graded bushings. These values shall not deviate by more than 1% from the values stamped on the nameplate.

5.7.6 Perform a hot collar type power factor test of all solid bushings. The value of each solid bushing shall not deviate by more than 2% from the watts loss of the other solid bushing on the transformer.

5.7.7 Perform excitation tests at 10 kV from 16R to 16L of the transformer windings. The patterns generated by these tests shall match those that were made by the manufacturer at the factory. The current generated by these tests shall match the currents measured by the manufacturer in the factory.

5.7.8 Take transformer turns ratio measurements from 16R to 16L of the transformer. All ratios shall be within 0.5% of the transformer nameplate values.

5.7.9 Perform the following Oil Tests:

5.7.9.1 Physical

Type of Test	***Limits***	***Test Standard***
Color (a)	0.5 max.	ASTM D-1500
Interfacial Tension (dynes/cm) 20° C	40 min.	ASTM D- 971
Specific Gravity	0.865-0.910 (60/60)	ASTM- 1298

5.7.9.2 Electrical

Type of Test	***Limits***	***Test Standard***
Dielectric Breakdown at 60Hz VDE Electrodes (kV) 0.04 inch gap	35 min.	ASTM D-1816
Dielectric Breakdown at 60Hz VDE Electrodes (kV) 0.08 inch gap	55 min.	ASTM D-1816
Power Factor at 60 Hz, 20° C	0.05% max	ASTM D- 924
Power Factor at 60 Hz, 100° C	0.3% max.	ASTM D- 924

5.7.9.3 Chemical

Type of Test	***Limits***	***Test Standard***
Total Acid Number, (mg KOH/g)	0.1 max.	ASTM D-2440
Water content (ppm)	5 max.	ASTM D-1533
Neutralization Number (mg KOH/g)	0.015 max.	ASTM D-974
Poly chlorinated Biphenyl's* (PCBs)	Not Detectable	EPA 608-1990

5.8 The Contractor shall provide a written report after assembly and testing is complete. Electronic format is acceptable. All Doble test results shall be made available to Austin Energy in electronic format suitable to load into DTAWeb software after completion of assembly.

6.0 Drawings

6.1 The Contractor shall furnish engineering drawings that are sufficient for design and construction of foundations for the transformer within six (6) weeks after receipt of the Delivery Order. All the information shall be in English and in standard non-metric units of measure. The following information shall be furnished:

6.1.1 Tank bottom dimensions within ± 4 inches.

6.1.2 Heights

6.1.3 Base to cover ± 4 inches.

6.1.4 Base to bushing terminals ± 5 inches.

6.1.5 Locations of bushings from centerlines of tank ± 4 inches.

6.1.6 Weights ± 5%, with oil and without oil.

6.1.7 Location of control cabinets within ± 3 inches from center line of tank.

6.1.8 Direction of removal of cooling equipment and bushings.

6.1.9 Height requirement for removal of bushings.

6.1.10 Location and size of Austin Energy conduit entrance to the control cabinet.

6.1.11 Power and voltage requirements of the cooling equipment.

6.1.12 The number and size of wires that Austin Energy must supply for power supply, controls, alarms, and the monitoring system in enough detail for the size of the incoming conduit to be determined

6.1.13 A schematic wiring diagram.

6.2 Drawings for approval shall be furnished within ten (10) weeks of Delivery Order issuance. The Contractor shall furnish one (1) complete set of electronic drawings for approval. These drawings shall be clearly stamped “FOR APPROVAL ONLY”. Partial sets are not acceptable. Each approval drawing set shall include, at a minimum, the following:

6.2.1 Outline drawings of the transformer packaged for shipping and the outline drawings for the transformer fully assembled for service.

6.2.2 Bushing outline drawings.

6.2.3 Connection diagrams showing where external Austin Energy cable connections are provided.

6.2.4 Control and alarm schematics.

6.2.5 Wiring diagrams showing all external control wiring (true point to point wiring diagrams shall be provided).

6.2.6 Nameplate drawings.

6.2.7 Current transformer characteristic curves.

6.2.8 Internal core and coil assembly drawings and lead arrangement drawings.

6.3 Austin Energy requires fifteen (15) working days after the receipt of approval drawings and manuals to review and return the approval drawings to the manufacturer. The Contractor shall not start actual construction until all issues are resolved.

6.4 The Contractor shall provide one (1) set of “CERTIFIED FOR CONSTRUCTION” outline, nameplate, electrical, control, and relay drawings when transformer construction begins. These drawings shall also be provided in AutoCAD release 14 or later on one (1) CD-ROM or via email. The certified drawings shall be sorted and bound as a set stamped “CERTIFIED FOR CONSTRUCTION” with current date on the drawings. The drawing sets shall include, at a minimum, the following:

6.4.1 Outline drawings of the transformer packaged for shipping and the outline drawings for the transformer fully assembled transformer for service.

6.4.2 Bushing outline drawings.

6.4.3 Connection diagrams showing where external Austin Energy cable connections are provided.

6.4.4 Control and alarm schematics.

6.4.5 Wiring diagrams showing all external control wiring (true point to point wiring diagrams shall be provided).

6.4.6 Nameplate drawings.

6.4.7 Current transformer characteristic curves.

6.4.8 Internal core and coil assembly drawings and lead arrangement drawings.

6.4.9 List of recommended spare parts with part number and cost.

6.5 The Contractor shall provide one (1) complete set of installation, operating, and maintenance instruction books for each of the transformer components and each relay and control device for each unit delivered. These materials shall be printed on 8 ½ inch x 11 inch paper, and bound in a heavy duty three ring binders suitable for reference and filing with the particular model supplied clearly noted on documents that apply to more than (1) type or model. Each set of the instruction books shall include a spare parts list detailing the manufacturer, catalog numbers, price, and ordering information. In addition, a complete set of "AS BUILT" drawings, including internal core and coil assembly drawings and lead arrangement drawings, shall be packed with the transformer. The manufacturer shall stamp "AS BUILT" and current date on these drawings. If revisions to the "AS BUILT" drawing are necessary, the Contractor shall pack the latest copy of the "AS BUILT" drawings with the transformer. The Contractor shall ship this material in weatherproof packing.

6.6 The Contractor shall provide one (1) complete set of "AS BUILT" drawings on one (1) CD-ROM or via email using AutoCAD release 14 or later. These drawings shall be submitted to Austin Energy no later than two (2) weeks after shipment of the transformer. The manufacture shall stamp "AS BUILT" and current date on these drawings.

6.7 The Contractor shall send one (1) copy of the certified test report to the AE Contract Manager after completion of factory acceptance testing. Electronic format via email acceptable.

6.8 All correspondence, after execution of the Contract, shall be directed to:

Equipment & Materials Engineering Supervisor
Austin Energy - Electric Service Delivery
2526 Kramer Lane Bldg. "E"
Austin, Texas 78758

7.0 Appendices/Exhibits/Attachments

Section 0505, Attachment A: CITY OF AUSTIN ELECTRIC UTILITY DEPARTMENT PURCHASE SPECIFICATION FOR 138kV - 12.47 kV, E-0815

Section 0505, Attachment B: CITY OF AUSTIN ELECTRIC UTILITY DEPARTMENT PURCHASE SPECIFICATION FOR 138kV X 69kV - 12.47 kV, E-0918

Section 0505, Attachment C: CITY OF AUSTIN ELECTRIC UTILITY DEPARTMENT PURCHASE SPECIFICATION FOR 138kV X 69kV - 35 kV, E-1762

CITY OF AUSTIN ELECTRIC UTILITY DEPARTMENT

PURCHASE SPECIFICATION

FOR

138 - 12.47 kV
30, 40, 50 OR 67 MVA

THREE PHASE POWER TRANSFORMER

DATE	PREPARED BY	ISSUANCE/REVISION	APPROVAL PROCESS SUPV. / MATERIALS SUPV.
04/26/2002	Greg Troxell	Issuance	
05/11/2005	Greg Troxell	Revision	
09/08/2005	Greg Troxell	Revision	
02/12/2007	Homer Portillo	Revision	
06/13/2011	Homer Portillo	Revision	
07/24/2012	Homer Portillo	Revision	
07/02/2015	M. Vela de Casillas	Revision	

REASON FOR REVISION	*AFFECTED PARAGRAPHS*
Prepare specification for bid solicitation	4.2, 5.4.3, 5.6, 5.10.4, 5.11.8, 5.15.1, 5.17.4, 5.23.6, 6.10.9, 6.18, 7

This specification, until rescinded, shall apply to each future purchase and contract for the commodity described herein. Retain for future reference.

TABLE OF CONTENTS

1.0 SCOPE AND CLASSIFICATION

1.1 ---------- SCOPE
1.2 ---------- CLASSIFICATION

2.0 APPLICABLE STANDARDS

2.1 ---------- STANDARDS

3.0 FUNCTIONAL REQUIREMENTS

3.1 ---------- FUNCTIONAL REQUIREMENTS

4.0 PERFORMANCE REQUIREMENTS

4.1 ---------- RATINGS
4.2 ---------- LOADING
4.3 ---------- IMPEDANCE
4.4 ---------- LOSSES
4.5 ---------- SHORT CIRCUIT REQUIREMENTS
4.6 ---------- AUDIBLE SOUND LEVEL

5.0 ACCESSORIES AND ADDITIONAL REQUIREMENTS

5.1 ---------- GENERAL
5.2 ---------- MATERIAL
5.3 ---------- CORE
5.4 ---------- INSULATION & WINDING CONSTRUCTION
5.5 ---------- THERMAL PERFORMANCE
5.6 ---------- BUSHINGS
5.7 ---------- LV THROAT
5.8 ---------- Bushing Current Transformer
5.9 ---------- Surge Arresters
5.10 ---------- DE-ENERGIZED TAP CHANGER
5.11 ---------- ON LOAD TAP CHANGER (OLTC)
5.14 ---------- INDICATING DEVICES
5.15 ---------- COOLING EQUIPMENT
5.16 ---------- OIL PRESERVATION SYSTEM
5.17 ---------- CONTROL CABINETS
5.18 ---------- AUXILIARY AND CONTROL POWER
5.19 ---------- GROUNDING
5.20 ---------- HANDLING
5.21 ---------- VACUUM FILLING
5.22 ---------- PAINT REQUIREMENTS
5.23 ---------- INSULATING OIL
5.24 ---------- NAMEPLATE REQUIREMENTS

6.0 INSPECTION AND TEST REQUIREMENTS

6.1 ---------- INSPECTION
6.2 ---------- DELAYS
6.3 ---------- ROUTINE TEST
6.4 ---------- ADDTIONAL TESTS
6.5 ---------- TEST SEQUENCE
6.6 ---------- INSULATION POWER FACTOR TESTS
6.7 ---------- LOAD LOSSES AND IMPEDANCE
6.8 ---------- NO-LOAD LOSS AND EXCITATION CURRENT TESTS
6.9 ---------- 110% EXCITATION TEST
6.10 ---------- TEMPERATURE RISE TESTS

6.11 ---------- LIGHTINING IMPULSE TESTS
6.12 ---------- APPLIED VOLTAGE TEST
6.13 ---------- NOISE TEST
6.14 ---------- INDUCED VOLTAGE TESTS
6.15 ---------- OTHER TESTS
6.16 ---------- CURRENT TRANSFORMER TESTS
6.17 ---------- CONTROL AND POWER WIRING TESTS
6.18 ---------- SWEEP FREQUENCY RESPONSE ANALYSIS TEST
6.19 ---------- SPECIAL TEST REQUIREMENTS

7.0 TEST REPORTS

7.1 ---------- CERTIFEID TEST REPORTS
7.2 ---------- PRINTING REQUIREMENTS
7.3---------- TEST REPORT REQUIREMENTS
7.4 ---------- SFRA TEST ELECTRONIC COPIES

ATTACHMENTS

I. TRANSFORMER BUSHING SPECIFICATION
II. TRANSFORMER/SWITCHGEAR OUTLINE
III. TRANSFORMER ONE-LINE
IV. TRANSFORMER OUTLINE
V. TRANSFORMER GROUNDING DETAIL
VI. TRANSFORMER DATA SHEET

CITY OF AUSTIN, ELECTRIC UTILITY DEPARTMENT
PURCHASE SPECIFICATION
FOR
138 - 12.47 kV, 30, 40, 50 MVA OR 67 MVA
THREE PHASE POWER TRANSFORMER

1. SCOPE AND CLASSIFICATION

1.1. Scope

The City of Austin (COA) Electric Utility Department d/b/a Austin Energy (AE) sets forth this specification as the minimum requirements for operating characteristics and safety features of a 138 - 12.47 kV power transformer.

1.2. Classification

1.2.1. The transformer shall be three phase 138 kV Delta - 12.47 kV Wye, 65° C temperature rise with an on load tap changer (OLTC) with capacities spelled out in section 4.1.

1.2.2. The transformer will be installed below an altitude of 1,000 meters and subjected to an annual ambient temperature variance of -25° C to +45° C. The average temperature for any twenty-four hour period will not exceed 30° C.

1.2.1 The manufacturer providing this unit shall have a minimum of 5 years of experience manufacturing power transformers meeting or exceeding this specification for the ANSI electric utility market.

2. APPLICABLE STANDARDS

2.1 Equipment supplied in accordance with this specification shall comply with the applicable provisions of the latest NEMA, IEEE, ANSI/IEEE, ASTM, NESC, NEC and ANSI standards (including but not limited to C57) relating to large power transformers. In case of conflict between any of the standards mentioned in this specification and the contents of this document, the AE specification shall govern.

3. FUNCTIONAL REQUIREMENTS

3.1 The transformer will be used in a step-down application in an electric utility distribution substation, connected to 12.47 kV, wye configured, 3 phase, 4 wire, solidly grounded neutral circuits of a separately furnished metal-clad switchgear line-up. The transformer high voltage bushings will be connected to the 138 kV transmission system and the low voltage bushing to the 12.47 kV distribution system.

4. PERFORMANCE REQUIREMENTS

4.1 Ratings

Ratings	
Frequency	60 Hz
Phase	3
Class	ONAN/ONAF/ONAF

Voltage				
High (HV)	138,000 Volts DELTA, 2x (±2 ½%) TAPS, DETC			
Low (LV)	12,470 Volts WYE, Solidly Grounded, ± 10% OLTC			
Capacity				
	Item 1	**Item 3**	**Item 4**	**Item 5**
Self-cooled	18 MVA	24 MVA	30 MVA	40 MVA
Forced-cooled	24 MVA	32 MVA	40 MVA	53 MVA
Forced-cooled	30 MVA	40 MVA	50 MVA	67 MVA
BIL				
HV	650 kV			
LV	150 kV			
Neutral	150 kV			
Temperature Rises				
Max Avg Winding Rise	65° C			
Max Hot Spot Rise (Wdgs & Leads)	80° C			
Maximum Top Oil Rise	65° C			
Loading Duty	**Terminal**	**MVA**	**Winding Temp. Rise by Resistance**	
Continuous	138 kV	See Capacity above	65°C	
Continuous	12.47 kV	See Capacity above	65°C	

4.2 The transformer and all auxiliaries shall be capable of carrying overloads in accordance with ANSI/IEEE C57.91. The manufacturer shall demonstrate that all auxiliaries have the adequate overload capability.

4.2.1 The neutral lead conductor and the neutral bushing shall be capable of carrying full load current. The neutral lead conductor and the neutral bushing shall also be capable of carrying all overloads in accordance with ANSI/IEEE C57.92.

4.2.2 The transformer shall be designed and manufactured to allow continuous operation at 110% voltage at no-load and at 105% voltage on the secondary winding at full load and 0.8 power factor without gassing.

4.3 Impedance

DETC, OLTC in Neutral Tap Position

18/24/30 MVA	24/32/40 MVA	30/40/50 MVA	40/53/67 MVA
9.5% on 18 MVA Base	9.5% on 24 MVA Base	9.5% on 30 MVA Base	9.5% on 40 MVA Base

The tolerance on impedances shall be in accordance with Section 9.2 of ANSI/IEEE C57.12.00.

4.4. Losses

4.4.1. The transformer losses will be used in the evaluation of the offers. No-load and load loss values at the 1 raise OLTC position at the self cooled (18 MVA, 24MVA, 30 MVA or 40 MVA) rating shall be supplied with the Offer and will be used in the evaluation. If the transformer has an OLTC, which uses variable volts per turn design, the no-load losses shall be guaranteed on the OLTC position having the highest no-load losses.

The Offeror shall state in the Offer the DETC and OLTC positions with the highest no-load losses as the guaranteed losses in the case of variable volts per turn design. The Offeror shall also submit with the Offer the auxiliary load at the maximum forced cooled rating for use in the evaluation.

The following life cycle costs will be used.

Cost of no-load losses	- $ 6,300/kW
Cost of load losses	- $ 3,400/kW
Auxiliary losses	- $ 1,500/kW

4.4.2. The Offeror shall submit with the Offer the maximum percent total measurement error for the no-load loss measurement and the load loss measurement systems. The errors must contain all components of the error including probable calibration errors and other uncertainties in the measurement system. Certified data for the loss measurement errors shall be submitted with the Offer. The data shall be traceable to the United States National Institute of Standards and Technology or other equivalent standardization organization. Equivalency will be determined by AE using supporting documentation provided by the Offeror as part of the Offer. A system check to insure that all errors have been properly applied may be required. Failure to submit a loss measurement system error or the submission of an error that is obviously erroneous will result in the rejection of the Offer.

a. The maximum loss measurement error that is acceptable is ± three (3) percent as per ANSI/IEEE C57.12.00.

b. Loss measurement errors greater than ± three (3) percent will result in the rejection of the Offer.

a. The no-load losses and excitation current at room temperature after impulse tests shall be used as the guaranteed values and shall not deviate from the no-load losses and excitation current values measured before impulse tests by more than five (5) percent. If the difference between the before and after values are greater than five (5) percent, AE shall be contacted and a course of action determined. It is expected that the manufacturer shall determine the cause and correct any problems that result in deviations in no-load losses and excitation current that are greater than five (5) percent. AE reserves the right to reject the transformer if satisfactory explanations or corrections are not made.

4.4.3. A transformer which, after factory testing, has losses exceeding the guaranteed losses as stated in the Offer shall have its selling price reduced. The amount of reduction

will be calculated by the kW difference (actual tested minus calculated guaranteed) multiplied by the evaluated cost per kW.

4.5. Short Circuit Requirements

4.5.2. The transformer shall be capable of withstanding the mechanical and thermal stresses produced by external short circuits under the conditions specified in ANSI/IEEE C57.12.00, except allowances for system impedance's are not allowed. The available short circuit currents shall be calculated based on infinite bus source feeding the transformer.

4.5.3. The manufacturer shall investigate the different fault conditions (3 phase fault, single line to ground fault, etc.) for the various combinations of tap positions and design for the highest stress conditions.

4.5.4. The manufacturer is expected to have adequate model and full size transformer test data on which to base the acceptance criteria for stresses.

4.5.5. All windings shall be designed for Free and Forced Buckling. The Offeror shall furnish sizing and compression procedures with the Offer. The maximum calculated stresses shall be as follows: 65% of the 0.2% yield stress for buckling stressed, 80% of the 0.2% yield stress for tensile stresses, and 65% of the elastic yield limit for tie planes.

4.5.6. Leads in the super structure of the active part shall be adequately supported to withstand the forces generated during short circuit events. Leads may not be fastened to the superstructure (cleats) with fabric tie material or polymeric cable ties. Leads are to be fastened with pressboard clamps, or AE approved alternative.

4.6. Audible Sound Level

The sound level shall not exceed 61 dB for the OA rating and shall not exceed 64 dB with the transformer energized and all cooling devices in operation, as measured by the procedures outlined in ANSI/IEEE C57.12.90.

5. ACCESSORIES AND ADDITIONAL REQUIREMENTS

5.1 General

5.1.1 Use 0, 1, 2, 3 for phase designation in lieu of N, A, B, C. Associate phase 1 with H1, X1, Y1, etc.

5.1.2 All manhole covers and manholes shall be round.

5.1.3 The tank cover shall be domed to prevent water from standing on the cover.

5.1.4 All nuts, bolts, and washers used on the transformer shall be non-rust stainless steel or AE engineer approved equivalent. All fasteners shall be metallic or AE approved equivalent.

5.1.5 Split or star lock washers shall not be furnished as locking or clamping devices inside the tank. Double nutting, or other methods approved by AE, shall be used for locking or clamping on the lead support framework.

5.1.6 All gaskets shall be in recessed, machined grooves. All gasket surfaces shall be made up by flanges. The Offeror shall provide a copy of the flange and gasket practices and procedures with the Offer.

5.1.7 All gaskets shall be made of high temperature Viton.

5.1.8 The tank, including the cover and base, shall be designed such that, after installation, there will be no permanent deformation caused by shipping or handling. Tank welds with oil on one side shall be welded inside and outside with continuous bead welds.

5.1.9 The serial number of the transformer shall be permanently stenciled or formed by welding near the grounding pads at two locations on diagonally opposite corners.

5.1.10 The use of internal varistors is not allowed.

5.1.11 All wiring external to the control cabinets shall be run in rigid metallic galvanized conduit or AE approved equivalent. Other accessories, such as thermocouple cable, shall also be run in rigid metallic galvanized conduit or AE approved equivalent. Conduit entrance into the control cabinet or any junction box shall only be located on the vertical sides or the bottom. No conduit entry may be located on the top horizontal surface.

5.1.12 The manufacturer shall provide the following spare components for each transformer purchased **without additional cost to AE**:

One (1) HV bushing
One (1) LV bushing
One (1) X0 bushing (if different from LV bushing)
One (1) Complete itemized set of gaskets
One (1) Fan and motor assembly
One (1) Reinhausen Vacuum bottle Lockout (VIM) protection card

These components shall be delivered to:

Austin Energy-Justin Lane Warehouse
906 Justin Lane
Austin, Texas 78758

No later than one (1) month from the delivery date of the transformer. Notification shall be made to the Contract Manager as specified in the Solicitation's Supplemental Purchase Provisions (Section 0400).

5.1.13 The Offeror shall state in the Offer, the special tools, if any, that are required for the installation and maintenance of the transformer. In addition, the Offeror shall provide any special tools, if any, required for the installation and maintenance of the unit without additional cost to AE.

5.1.14 Care shall be taken in the design and assembly of the transformers to reduce and to minimize vibration. The transformer shall be free from any undue or harmful vibration, which would be detrimental to the operation of the transformer, and any auxiliaries mounted on the tank or connected to the transformer. The average amplitude of all local maximum points shall not exceed 60μm (2.36 mils) peak-to-peak. The maximum amplitude within any rectangular area shall not exceed 200μm (7.87 mils) peak-to-peak.

5.1.15 An analysis of the leakage magnetic fields is required to prevent excessive heating of metallic parts. If magnetic shields are provided, the flux density in any part of the shields shall be less than saturation for the material at rated load and at any stated load in excess of nameplate rating.

5.1.16 The leakage flux analysis shall include the heating effects in leads, cables, connectors, etc. in the cleats and leads structure.

5.1.17 At rated nameplate loading, the temperature of metallic parts shall be limited to 130°C when the ambient temperature is 30°C. Tank wall temperatures shall be limited to 105°C at the same ambient temperature.

5.1.18 Leads in the super structure of the active part shall be adequately supported to withstand the forces generated during short circuit events. Leads may not be fastened to the superstructure (cleats) with fabric tie material or polymeric cable ties. Leads are to be fastened with pressboard clamps, or AE approved alternative.

5.1.19 Fall protection provisions shall be added to each transformer as described below.

a. DBI Sala - UCL aluminum fall arrester anchor post (part number: 8516691)

b. UCL advanced aluminum portable fall arrester anchor post davit arm assembly (part number: 8516693)

c. Advanced Digital 100 series 2 speed winch with removable handle (part number: 8518564)

d. Base plate - (part number: 8517412).

5.2 Material

5.2.1 All material used in the construction of the transformer shall be new.

5.2.2 The conductor for all current carrying parts, including windings and leads, shall be copper or silver bearing copper.

5.2.3 All material used, or proposed to be used, in the transformer shall be tested, and have passed the transformer oil compatibility test using the method outlined in ASTM D3455 or AE engineer approved equivalent. The test reports shall be available upon request for AE inspection at any time during the evaluation or manufacturing process. Any material found by the AE inspector which has not had the oil compatibility test performed on it, or that the manufacturer can not produce oil compatibility test report for, shall be tested immediately at the manufacturer's expense. If the material fails the oil compatibility test, AE will not accept the transformer until all non-compliant material is replaced.

5.2.4 All material used in the transformer shall be subject by the manufacturer to rigid quality assurance and control standards. The manufacturer shall have traceability on all material from receiving until final installation in the transformer. Material tracking and inspection reports shall be made available to the AE inspector upon request.

5.2.5 The manufacturer shall have conducted an initial vendor inspection and qualifying audit with ongoing spot checks on all material used in the transformer. Vendor inspection and audit reports shall be made available to the AE inspector upon request. Materials found by the AE inspector to have not been properly qualified for use by the manufacturer shall, as a general rule, be unacceptable for use in the transformer. Arrangements satisfactory to the AE inspector, up to and including the replacement of the non-qualified material, shall be made by the manufacturer.

5.3 Core

5.3.1 The materials and methods of construction used shall be such that the core structure will be strong, rigid, and durable, and will have permanently low losses.

5.3.2 The magnetic circuit shall be constructed of the highest-quality, non-aging grain-oriented sheet steel having high permeability and low losses.

5.3.3 Each lamination or sheet of core steel shall be free from burrs, sharp projections, rust, scales, or other conditions that may impair the operation or life of the core. Each lamination or sheet of core steel shall be sufficiently coated with a durable, oil-proof, heat-resistant insulating coating.

5.3.4 The maximum allowable burrs on the slit or cut edges of electrical steel used in the core shall not exceed 0.7 mils. Excessive edge or surface damage during manufacture may be the basis for the rejection of the core.

5.3.5 In core configurations other than step lap, the core gaps shall not be greater than 1/16". Gaps greater than 1/16" must be justified to AE during the design review.

5.3.6 Cooling surfaces and oil ducts shall be arranged so the temperature of all parts of the core will be substantially uniform and no spot in the core will reach an excessive temperature greater than 125˚ C with an ambient of 40˚ C.

5.3.7 The core and end frames shall be securely clamped and bolted to prevent vibration during operation and the core assembly shall withstand, without change of shape or position, all stresses due to shipping, handling, and short circuits. End frames, core clamping structures, and tie rods shall be constructed of steel. Core clamping structures shall be insulated from the core. The mechanical supporting structure and all other mechanical parts of the transformer shall be designed for transportation accelerations of 5g longitudinal, 3g vertical, and 1.5g transverse.

5.3.8 The core induction must meet the ANSI/IEEE requirements for continuous operation at 110% voltage no load, and with 105% voltage on the loaded winding at full load and 0.8 power factor. The maximum induction in the core at either of these conditions shall not exceed 1.93 Tesla for step-lap joints and 1.91 Tesla for non step-lap joints.

5.3.9 Bolts through the core are unacceptable.

5.3.10 Insulating materials built into and adjacent to the core shall be rated with a thermal class to operate without accelerated aging for the temperatures in the center of the core and on the surface of the core.

5.4 Insulation and Winding Construction

5.4.1 The insulation of all windings shall be capable of withstanding the dielectric tests corresponding to the basic insulation level of each winding, as specified in the ANSI standards. The voltage distribution shall be substantially uniform throughout the windings.

5.4.2 The conductors and insulation shall be designed so the formation of partial discharge will be minimized at the operating voltages specified herein.

5.4.3 The conductors shall be designed so the eddy current losses are minimized and the required mechanical strength is assured. All joints in winding conductors shall be brazed or other AE approved method. All conductors shall be carefully smoothed to remove any burrs and slivers before the insulation is applied. Conductors shall be insulated with spirally wound layers of the highest grade of cable paper. The paper shall be Dennison 22HCC or Munksjo Thermo 90, or purchaser approved equal.

5.4.4 All coils shall have each turn supported at frequent intervals by insulating spacers, which shall be locked or clamped in place and so arranged as to ensure positive and effective oil circulation. All such insulating spacers shall be compressed at high pressure before assembling in the coil stacks in order that the coil stacks shall remain permanently tight. The minimum final pressure on the coils shall be 5 N/mm^2.

5.4.5 The insulation must be designed to have a minimum margin in the oil spaces of 20% based on the Weidman oil curves. All insulation must have adequate margin for test and operating voltages, which will be reviewed at the design review.

5.4.6 Individual windings used for DETC or OLTC regulation shall be constructed with a fully distributed winding design.

5.4.7 The transient voltage analysis of the transformer shall be performed with an analytical tool that includes both the capacitive and inductive circuit elements.

5.4.8 All internal coil connections shall be welded or brazed.

5.5 Thermal Performance

5.5.1 The designer will be expected to furnish the following information after the design is completed.

a. Average Winding Rises for all Windings at the OA and maximum forced cooled ratings.

b. Top and bottom oil rises for the OA and maximum forced cooled ratings.

c. Calculated hot spot rises for each winding at the OA and maximum forced cooled ratings.

The hot spot rises must be calculated using maximum localized losses, oil flow patterns, and insulation on the conductors. Allowances will not be accepted

5.5.2 The windings shall limit the overload. The hot spot of the leads shall not exceed the maximum hot spot of the windings.

5.5.3 Insulation Drying

a. The maximum water content of the insulation when received at the site shall be 0.5%.

5.5.4 The loading of the transformer shall be limited by winding temperatures and not by temperature of leads, switches, bushings, or any other ancillary device. The temperature of lead exits from the insulation structure shall be controlled to be less than or equal to 3° higher than the conductor in the winding at rated load.

5.6 Bushings

5.6.1 The bushings supplied with this transformer shall conform to the requirements of AE Purchase Specification E-1416, dated 04/15/2015, with the exception that all gaskets shall be made of high temperature Viton. See Attachment I for a copy of Specification E-1416.

5.6.2 The XV (including X0) bushings shall be ABB Type LCRJ, Style #025B0300DU, or AE engineer approved equivalent. The XV bushings shall be suitable for operation in a throat at 125°C.

5.6.3 The HV bushings shall be ABB Type O Plus C, Style #1Z UA138 012-AAASEEABB, or AE engineer approved equivalent.

5.6.4 Bushing color shall be ANSI #70 light gray.

5.6.5 The BIL ratings for the bushings shall be as follows:

Terminals	BIL	Voltage Class
HV	650 kV	138 kV
XV	150 kV	25 kV

5.6.7 The bushings shall be arranged as shown on Attachment IV, AE Drawing 7E-800.

5.6.8 All bushings shall be supplied with stud to four (4) hole NEMA pad connectors. The four (4) hole NEMA pad shall have machine milled surfaces on both sides to permit conductors to be attached to both sides. The connectors shall be suitable for connection to aluminum bus or jumpers and copper bus.

5.7 LV Throat

5.7.1 The secondary terminals shall be suitable for throat connection to switchgear via bus duct as indicated on Attachment II, AE Drawing No. 7D 283-1. The switchgear, bus duct, and secondary arresters will be provided by others.

5.7.2 The LV Throat shall be equipped with a hinged access plate constructed to swing towards the transformer tank on the bottom of the throat to provide unobstructed access to the LV bushing terminals. The access plate shall be constructed from the same material as the throat housing. The throat shall be of sufficient strength to fully support the access plate.

5.7.3 The access opening dimension shall be no less than 36" x 24" and shall be located to facilitate connections and taping of LV bus bar.

5.7.4 Provisions shall be made on the access plate and on the transformer to keep the hinged access plate in the full open position by utilizing hooks and eye bolts or other AE engineer approved equivalent.

5.7.5 The access opening shall be provided with a reusable gasket to provide a weatherproof seal when the access plate is closed and bolted to the throat housing.

5.8 Bushing Current Transformer

5.8.1 Bushing current transformers for AE's use shall be provided. The manufacturer shall install bushing-type current transformers on the HV as per Attachment III.

5.8.2 Multi-ratio bushing current transformers shall conform to the latest ANSI/IEEE C57.13 standard. All current transformers shall be ANSI Class C800. The following CTs shall be supplied per phase:

Terminal	Number of CTs	CT ratio
HV	1	600/5 multi-ratio with ANSI Standard taps- to be located closest to the bushing
HV	2	2000/5 multi-ratio with ANSI Standard taps
X0	1	1200/5 multi-ratio with ANSI Standard taps

5.8.3 All secondary leads of current transformers shall be brought to a common outlet housing near the cover and then to the weatherproof control cabinet. At the control cabinet each lead shall be terminated on a terminal block with short circuiting provisions. Each multi-ratio current transformer shall terminate on a separate block.

5.8.4 At least two (2) circular manholes shall be provided in the cover of the main tank to allow the removal or addition of current transformers. Each manhole shall be a minimum of 24" in diameter.

5.9 Surge Arresters

5.9.1 The transformer shall be provided with metal oxide station class surge arresters. The housing for the HV surge arresters shall be polymer. Acceptable arresters and their ratings are as follows:

Arrester Ratings:

Terminals	Manufacturer	MCOV (kV)
H1, H2, H3	Cooper	84
	ABB	84
	Siemens	84
	GE	88

5.9.2 The manufacturer shall provide mounting for the arresters. The manufacturer shall minimize the distance between the surge arrester and the bushing.

5.9.3 The manufacturer shall provide a surge arrester ground pad for each arrester consisting of a tank grounding pad as specified in ANSI/IEEE C57.12.10. The grounding pad shall be mounted on the side of the tank as close as possible to the arrester.

5.9.4 All surge arresters shall be manufactured and tested in accordance with ANSI/IEEE C62.11.

5.9.5 If manufacturer determines corona rings are necessary, the surge arresters shall be equipped with corona rings.

5.10 De-energized Tap Changer (DETC)

The transformer shall be provided with full capacity high voltage de-energized taps of:

131,100; 134,500; 138,000; 141,450; 144,900 Volts

5.10.1 Operation of the de-energized tap changer from ground level is required. The de-energized tap changer position indicator shall be visible from ground level.

5.10.2 Provisions for padlocking shall be furnished for each de-energized tap position.

5.10.3 The de-energized tap changer shall be arranged to provide for inspection and maintenance without untanking.

5.10.4 The de-energized tap changer shall not require periodic movement during the life of the transformer for preventive maintenance purposes. The contacts of the switch shall be silver plated.

5.11 On Load Tap Changer (OLTC)

5.11.1 The transformer shall be equipped with an automatic OLTC meeting the following requirements:

a. The OLTC equipment shall be the Reinhausen RMV-II with the MD-III motor drive / control cabinet with a VIM Monitoring System Model “B” Version. The OLTC cabinet shall include the accessories required to provide digital remote tap position information to SCADA via DNP 3.0 protocol. The remote tap position signal shall be accessible to AE in the main control cabinet.

b. A Beckwith M2001D regulating relay complete with the Beckwith M-2270B adapter panel shall be included in the main control cabinet with the following provisions:

i The M-2270B shall have the following options

1 SCAMP (SCADA controllable Auto/Manual Pushbutton) switch. Requires M-2001 Series Control with firmware version D-0146V08.05.015 or later.

2 SCADA Cutout Switch (local/remote) Blocks SCADA “write” commands.

ii The Beckwith relay shall have provisions for RAISE and LOWER operations.

iii These provisions shall not interfere with similar provisions for operation of the OLTC in the OLTC cabinet.

c. The OLTC and all associated windings shall be capable of operating at the maximum transformer rating (30 MVA, 40 MVA, 50 MVA, or 67 MVA) continuously.

d. The manufacturer shall provide a separate complete nameplate for the OLTC.

e. The regulating winding shall be fully distributed.

5.11.2 Provisions shall be provided for thirty-two (32) steps. All tap positions shall be full capacity. Each step will correspond to a change in voltage of 5/8 percent of center tap voltage (12.47 kV).

5.11.3 The transformer and the on load tap changer shall be designed to operate in a step-down mode. The primary purpose of the OLTC will be to keep the secondary voltage constant should the load on the 12.47 kV distribution system and/or the 138 kV system voltage vary.

5.11.4 The manufacturer shall locate the OLTC as per the requirements outlined in the preceding two paragraphs.

a. The Offeror shall provide with the Offer the location of the on load tap changer and a description of how it satisfies the requirements of the specification.

b. The proposed control scheme to accomplish the primary mode of operation must be included in the Offer submittal.

5.11.5 The OLTC shall be accessible from ground level.

5.11.6 A table of voltages and currents for each OLTC position at the 65° C maximum nameplate rating at all tap voltages shall be provided on the nameplate.

5.11.7 The on load tap changer motor shall be mounted in the OLTC control cabinet and it shall be readily accessible with the transformer energized. The motor shall be equipped with overcurrent protection with a manual reset.

5.11.8 Provisions shall be made for the operation of the OLTC in the OLTC cabinet.

a. Local or Remote operation

i. While in the REMOTE position, the transformer tap position may also be changed upon receipt of a signal from the AE's remote supervisory equipment or may be operated from the BECKWITH AVR unit. The manufacturer shall provide all the equipment in the transformer necessary to effect these operations. Each signal shall result in one tap position change.

ii. The LOCAL position shall allow operation from the OLTC cabinet only and disable operation from the main control cabinet or from AE's remote supervisory equipment.

b. Raise or Lower switch with provisions for OFF. This shall only be allowed in the LOCAL position.

c. The provisions above shall work in conjunction with the operation with controls of the OLTC in the main cabinet and included in the Beckwith relay.

5.11.9 Auxiliary contacts shall be provided for "on-tap/off-tap" status indication on remote equipment.

5.11.10 The manufacturer shall wire all equipment control wiring to a terminal strip in the control cabinet. AE will connect wiring for "Raise", "Lower", "Auto", and "Remote" to this terminal strip.

5.11.11 Auxiliary contacts shall be provided for "OLTC Upper Limit Over Travel" and "OLTC Lower Limit Over Travel" alarms to the Annunciator described in section 5.14.12.

5.11.12 The manufacturer shall provide one (1) counter to count all OLTC operations.

5.11.13 The following electrical accessories shall be provided in the OLTC control cabinet: one (1) thermostatically controlled heater to prevent condensation; one (1) 120 V, 100 W equivalent, mechanically protected fluorescent outdoor light equipped with an outdoor fixture and outdoor door-operated switch; and one (1) 120 V, 20 Amp, outlet equipped with a Ground Fault Interrupting Device (GFCI). Each accessory shall be supplied from a separately protected circuit.

5.11.14 A mechanical position indicator with maximum and minimum indicating hands shall be provided. The position indicator shall be visible through a window in the door of the OLTC control cabinet and shall also be visible from the manual control panel. The manufacturer shall provide a push button to reset the maximum and minimum indicating hands. The push button shall be located in the OLTC control cabinet.

5.11.15 The OLTC contacts shall be guaranteed for a minimum of 500,000 operations at full load before OLTC contact maintenance is required, regardless of rated through current. The OLTC shall be designed to achieve the full 500,000 operations on any combination of adjacent taps.

a. The Offeror shall provide verification with the Offer that the selected OLTC meets the requirements contained in this section. The verification shall include, but not be limited to, the minimum number of operations before the mechanism and contacts require maintenance and the calculations used to arrive at this number.

5.11.16 The manufacturer shall provide one (1) combination 2" drain and sampling valve located at the bottom of the OLTC compartment. The sampling device shall be suitable for use with ¼" I.D. Tygon tube for taking oil samples. The valves supplied shall be Milwaukee Valve Company #506-202 or AE engineer approved equivalent.

5.11.17 The manufacturer shall provide an electrically interlocked hand crank for manual operation of the OLTC.

5.11.18 The manufacturer shall provide limit switches and mechanical stops to prevent over-travel of the drive mechanism.

5.11.19 The manufacturer shall provide one (1) rapid pressure rise sensing unit mounted on the OLTC compartment. The unit shall be equipped with test plugs to simulate a rapid pressure rise so that the unit can be tested periodically. All wiring external to the control cabinets shall be run in rigid metallic galvanized conduit or AE engineer approved equivalent.

a. The rapid pressure rise sensing unit shall be a Qualitrol Series 910 Rapid Pressure Rise Relay complete with CON-603 series connector and Standard (not ANSI) wiring diagram.

b. The RPRR unit shall be mounted on a 2” gate type valve which is mounted on the transformer tank. The valves supplied shall be Milwaukee Valve Company #505-001 or AE engineer approved equivalent

c. Circuitry from this device shall be connected to a seal-in relay. This seal-in relay shall be equipped with reset button, indicating light, trip (63X) and alarm contacts and shall be mounted in the main control cabinet. The seal-in relay shall be a Qualitrol Series 909-300-01 Seal-In Relay

d. Indicating light shall indicate RPRR - OLTC (Rapid Pressure Rise Relay - OLTC) trip and shall remain lit until the rapid pressure rise relay has been manually reset.

e. All circuitry and relays associated with the rapid pressure rise relay scheme for the OLTC shall be independent from the rapid pressure rise relay scheme for the main tank.

5.11.20 The manufacturer shall provide one (1) automatic pressure relief device, which can be reset manually, mounted on the OLTC compartment. All wiring external to the control cabinets shall be run in rigid metallic galvanized conduit or AE engineer approved equivalent. Circuitry from this device shall be routed to the main control cabinet where alarm contacts and a local trip flag shall be provided.

a. The automatic pressure relief device shall be a Qualitrol Series 208 Pressure Relief Device, complete with CON-603 series connector and Standard (not ANSI) wiring diagram, and #415-P73 switch.

5.11.21 The manufacturer shall provide one (1) magnetic liquid level gauge with low liquid level alarm contacts for the OLTC.

a. The manufacturer shall set the contacts of the alarm to operate when the oil level drops below normal operating level.

b. The liquid level gauge shall have a six (6) inch dial.

c. The magnetic liquid level gauge shall be a Qualitrol Series 032 Magnetic Liquid Level Gauge, complete with CON-603 series connector and Standard (not ANSI) wiring diagram. Part # CAS-747-1.

5.11.22 The manufacturer shall provide terminal board points for PT terminations in the OLTC cabinet.

5.11.23 The manufacturer shall provide a ventilated weatherproof control cabinet with hinged doors equipped with wind latches. The doors shall provide access to the control devices and have provisions for padlocking. All cabinet and door hardware shall be non-rust stainless steel.

5.11.24 A line-drop compensator (LDC) current transformer shall be provided on the X2 bushing.

5.12 The windings of either the series transformer, or the preventive auto-transformer, shall be the same type as the main windings. The manufacturer shall use the same winding construction methods on all windings in the transformer, including the series transformer and the preventive auto-transformer.

5.13 All exposed rotating drive shafts and related components shall be protected from accidental contact with steel covers. The steel covers shall be of sufficient rigidity and supported to prevent deformation.

5.14 Indicating Devices

Dial type indication gauges shall be removable, have detachable covers with glass faces, and shall be water resistant. All gauges shall be readable from the ground. That is, the gauges shall be readable by a six (6) foot tall person standing four (4) feet from the base of the transformer. The manufacturer shall tilt the gauges to allow this, if necessary. Each terminal of every switch shall be wired separately to a terminal strip in the main control cabinet. The following indicating devices shall be included:

5.14.1 One (1) magnetic liquid level gauge with low liquid level alarm contacts for the expansion tank. The contacts shall be set by the manufacturer to alarm when the oil level drops below normal operating level. The liquid level gauge shall have a six (6) inch dial. The magnetic liquid level gauge shall be a Qualitrol Series 032 Magnetic Liquid Level Gauge, complete with CON-603 series connector and Standard (not ANSI) wiring diagram. Part Number: 032-018-01

5.14.2 One (1) dial type liquid temperature thermometer shall be mounted at eye level. The thermometer shall be furnished with a maximum temperature indicator needle, which can be read and reset manually through the face from ground level, and with alarm contacts wired to the main control cabinet. The thermometer shall be mounted in a thermometer well as shown in Figure 3 of ANSI/IEEE C57.12.00. The liquid thermometer shall be located adjacent to the winding temperature indicator. The liquid temperature indicator shall have a six (6) inch dial. The liquid temperature thermometer shall be a Qualitrol Series 104 Remote Thermometer Controller. Part Number: 104-321-02

5.14.3 One (1) dial type hot spot temperature indicator mounted at eye level with thermal load indicating dials and contacts for control of forced cooling equipment shall be provided. This indicator shall be furnished with maximum temperature indicators that can be reset manually through the face at ground level. The words “Winding Temperature” shall be on the dial or on a suitable nameplate adjacent to it. The hot spot temperature indicator shall have a six (6) inch dial. The hot spot temperature thermometer shall be a Qualitrol Series 104 Remote Thermometer Controller. Part Number: 104-321-02

5.14.4 Two (2) rapid pressure rise (RPR) sensing units shall be supplied and mounted on diagonal corners of the main transformer tank. The RPR devices shall be accessible from the ground level.

a. The rapid pressure rise sensing unit shall be a Qualitrol Series 900 Rapid Pressure Rise Relay, complete with CON-603 series connector and Standard (not ANSI) wiring diagram.

b. The RPRR unit shall be mounted on a 2” globe type valve which is mounted on the transformer tank. The valves supplied shall be Milwaukee Valve Company #505-001 or AE engineer approved equivalent.

c. Each unit shall be equipped with test plugs to simulate a rapid pressure rise so that the unit can be tested periodically.

d. Circuitry from both of these devices shall be provided to a seal-in relay. The seal-in relay shall be a Qualitrol Series 909-300-01 Seal-In Relay.

e. This seal-in relay shall be equipped with reset button, indicating light, trip (63X) and alarm contacts and shall be mounted in the main control cabinet.

f. Indicating light shall indicate RPRR - Main Tank (Rapid Pressure Rise Relay - Main Tank) trip and shall remain lit until the rapid pressure rise relay has been manually reset.

g. All circuitry and relays associated with the rapid pressure rise relay scheme for the main tank shall be independent from the rapid pressure rise relay scheme for the OLTC.

h. All wiring external to the control cabinets shall be run in rigid metallic galvanized conduit or AE engineer approved equivalent.

5.14.7 One (1) cover mounted automatic pressure relief device (PRD) for each 10,000 gallons of oil, which can be reset manually. Circuitry from these devices shall be routed to the main control cabinet where alarm contacts and a local trip flag shall be provided. The pressure relief devices shall be located such as to provide equal coverage on the cover.

a. The automatic pressure relief device shall be a Qualitrol Series 208 Pressure Relief Device, complete with CON-603 series connector and Standard (not ANSI) wiring diagram, and #415-P73 switch.

b. Part Number: 208-60Z (CS11471)

5.14.8 The manufacturer shall provide two (2) 2" combination upper filter and sampling valves at the top of the transformer. These valves shall be located on opposite ends on the short sides of the transformer, below the 25°C oil level, suitable for the return of filtered oil.

5.14.9 The manufacturer shall also provide two (2) 2" combination drain and sampling valves at the bottom of the transformer. These valves shall be located on opposite ends on the short sides of the transformer.

5.14.10 All four combination filter/drain and sampling valves shall be of the globe type brass valves and shall be located where there are no obstructions within 24" of the valve vicinity.

a. The valves supplied shall be Milwaukee Valve Company #506-202 or AE engineer approved equivalent.

b. The valves shall have 2" NPT with a threaded pipe plug on the open end. The valves shall have a built-in sampling device, which shall be located in the side of the valve between the main valve seat and the pipe plug. The sampling device shall be supplied with a 5/16" 32 threads per inch male connector equipped with a gasketed screw-on cap. The sampling device shall be suitable for use with ¼" I.D. Tygon tube for taking oil samples.

5.14.11 The manufacturer shall provide one Qualitrol Thermal Plate #2WTL-1027-1 mounted on the tank wall above the control cabinet.

5.14.12 One (1), twelve-point 125 V DC SEEKIRK Annunciator, similar to Type B1003S43 except with one (1) output alarm contact per point, shall be mounted and wired in the control cabinet with AE access to the output alarms. The Annunciator shall be equipped with plug-in modules (soldered modules not allowed). As a minimum, the following alarms shall be provided:

a. Sudden Pressure Trip (63X-1,2 Tank & 63X-3 OLTC)

b. Pressure Relief (63P-1 Tank & 63P-2 OLTC)

c. High Winding Temperature (49T) *manufacturer to insert alarm temp here

d. High Liquid Temperature (26Q) *manufacturer to insert alarm temp here

e. Low Liquid Level (71Q- 1 OLTC, 71Q-2 Tank)

f. OLTC Upper /Lower Limit

g. OLTC Vacuum Bottle Lockout (86X)

h. Regulating Relay Alarm (90)

i. Main AC Failure (27-1)

j. Fan AC Failure (27-2, 27-3)

k. OLTC AC Failure (27-4)

l. Nitrogen High/Low Pressure

5.14.13 All indicating devices mentioned in section 5.14.12 shall have their alarm and trip contacts wired to a terminal strip in the control cabinet. Connection of the indicating devices to the annunciator shall be from this terminal strip. Separate points for each sudden pressure relay alarm on the annunciators shall be provided. All alarm and relay contacts shall be rated for use at 250 volts DC.

5.14.14 The manufacturer shall provide one Schweitzer SEL 2600A00 RTD module to accept inputs from 100Ω Platinum RTDs mounted in the Qualitrol Thermal plate described in item 5.14.11.

5.14.15 All wiring external to the control cabinets shall be run in rigid metallic galvanized conduit or AE engineer approved equivalent.

5.15 Cooling Equipment

5.15.1 Removable radiators with top and bottom shutoff valves shall be provided. The radiators shall be hot dipped galvanized.

5.15.2 The control of the oil cooling devices shall be actuated by winding temperatures and shall progress in accordance with the provisions for two stage cooling as described in ANSI/IEEE C57.12.10. The manufacturer shall determine and set the exact values at which each cooling step takes place. These points, including that of the high temperature alarm, shall be marked on the face of the winding temperature device. In addition, a nameplate readable from ground level shall be provided to indicate the temperature values at which each event occurs.

5.15.3 In addition to normally provided controls, each set of cooling equipment shall be provided with an automatic/manual selector switch to permit operation of all cooling equipment simultaneously for test purposes. Automatic controls shall also be provided to equalize operating time on all fans. That is, each set of cooling equipment shall alternately be started.

5.15.4 All fan motors shall be 240 VAC, single phase and be equipped with sealed ball bearings and an individual thermal protective device equipped with automatic reset. Fan motors shall be arranged with suitable wiring connectors such that if defective they may be removed for maintenance without taking the transformer out of service. Fan motors shall be UL or CSA recognized. All fans shall be provided with blade guards that meet OSHA requirements.

5.16 Oil Preservation System

5.16.1 The oil preservation system shall be a nitrogen gas pressure system. The system shall be complete with low and high pressure alarms and all associated controls, mounted in a weatherproof compartment mounted on the side of the transformer. The bottom of the nitrogen bottle shall be no higher than 6 inches above the transformer. Alarm contacts shall be provided with leads wired to the annunciator (see 5.14.12). All door hardware and mounting hardware shall be non-rust stainless steel.

5.17 Control Cabinets

5.17.1 All current transformer (CT) circuits, alarm circuits, potential circuits, and other circuits shall be housed in a single weatherproof cabinet.

5.17.2 Current transformer circuits shall be wired to terminal strips equipped with shorting bars (General Electric Type EB-27 or AE engineer approved equivalent). All CT wiring shall be No. 10 AWG copper wire, 600 Volt insulation, NEC THW rated.

5.17.3 The control cabinet shall be accessible from ground level. The bottom of the cabinet shall be a minimum of 18 inches above the base. All cabinet and door hardware shall be non-rust stainless steel.

5.17.4 The control cabinet shall accommodate an uncut, non-magnetic bottom entrance plate large enough to handle four (4) two (2) inch rigid conduits on 3 3/8” centers. A clear path shall be provided between the conduit entrance and all terminal boards. The manufacturer shall not use any portion of this plate for wiring installed at the factory.

5.17.5 The following electrical accessories shall be provided in the main control cabinet: one (1) thermostatically controlled heater to prevent condensation; one (1) 120 V, 100 W equivalent, mechanically protected fluorescent outdoor light equipped with an outdoor fixture and outdoor door-operated switch; and one (1) 120 V, 20 Amp, dual receptacle outlet equipped with a Ground Fault Current Interrupting Device (GFCI). The receptacle outlet shall be accessible from the outside of the control cabinet without having to open any control cabinet doors. Each accessory shall be supplied from a separately protected circuit.

5.17.6 All transformer auxiliary wiring shall be a minimum of No. 12 AWG copper wire, 600V insulation, NEC THW rated. The auxiliary wiring shall be captivity identified at both ends and routed to the control cabinet in galvanized conduit and fittings.

5.17.7 All wiring shall be flame resistant, oil resistant, heat resistant, and moisture resistant. All wiring shall be complete and performed in a professional, workmanlike manner and bundled or contained.

5.17.8 Splices in wiring will not be allowed.

5.17.9 Each end of all conductors shall be permanently tagged and identified. The method of permanently tagging the conductor ends shall be approved by the AE engineer. Wire ends shall be permanently fitted with compression type, ring lugs before attaching securely to terminal studs.

5.17.10 The manufacturer shall design the layout of the electrical wiring in the control cabinet to segregate the manufacturer’s wiring from the AE’s wiring. Terminal boards shall be wired with one side reserved for the manufacturer and one side

reserved for the AE. Factory wiring shall not be terminated on the side of the terminal boards reserved for AE use.

5.17.11 Terminal boards for control wiring shall be solid molded blocks, rated 600 Volts and a minimum of 30 Amperes per terminal and able to accommodate wire sizes up to and including #10 AWG wire size.

5.17.12 All control wiring shall be wired to #10-32 barrier type terminal strips properly sized to handle the loads (General Electric Type EB-25 or AE engineer approved equivalent). Terminal board covers are not desired. However, a white marking strip shall be furnished, marked, and attached so that terminal points can be identified. Terminal board points for terminating transformer AC supply for fans, pumps, OLTC drive, etc. shall accept #6 AWG and shall be rated for a minimum of 50 Amps. The use of "plug-in" terminal boards will not be allowed.

5.17.13 All devices in control cabinet shall be permanently identified and marked with appropriate reference designator as shown on the manufacturer supplied schematic and wiring diagrams.

5.17.14 All control cabinet doors shall be supplied with wind latches. If multiple doors are used in the control cabinet, the wind latches of the inner door shall attach to the outer door.

5.17.15 The control cabinet shall be equipped with a weatherproof pocket mounted on the inside of the control cabinet door. The weatherproof pocket shall be of sufficient size to accommodate the instruction book and all drawings. The weather pocket shall have a hinged top cover to facilitate retrieval of the instruction book and drawings. The weatherproof pocket shall not interfere with the operation of the relays inside the control cabinet with the door closed. Sufficient clearance shall be maintained between the weatherproof pocket and the devices inside the control cabinet with the doors in the closed position.

5.17.16 The control cabinet shall be equipped with a drip shield to prevent rainwater from dripping into the control cabinet with the doors in the open position.

5.18 Auxiliary and Control Power

5.18.1 AE will provide the 125 V DC, 2 wire and 120/240 V AC, 1 phase, 3 wire power sources necessary to operate the on load tap changer, cooling equipment, and control circuits.

5.18.2 The sudden pressure relays, alarm circuits, and other DC control equipment shall operate from 125 V DC.

5.18.3 Single phase 120/240 V AC and 125 V DC loads shall be supplied by molded-case circuit breakers properly sized for the loads. Molded-case circuit breakers shall be dual-rated at 240 V AC/250 V DC. Molded case circuit breakers with 50°C ambient temperature rating are to be used exclusively**. Knife switches and fuses are not allowed.** All circuit breakers shall have an interrupting rating of 10 kA.

5.18.4 An AC failure relay and alarm shall be provided for the single phase 120/240 V AC circuits. The alarm shall have an adjustable time delay of up to 5 minutes. The contacts shall be wired to terminal blocks for AE use and to the annunciator.

5.18.5 DC failure relays and alarms shall be provided for each 125 V DC circuit. The contacts shall be wired to terminal blocks for AE use. The DC failure alarm shall monitor the incoming DC service.

5.19 Grounding

5.19.1 The manufacturer shall install external core ground test points from each individual core section to an external core ground bushing located on the top or side of the transformer. This applies to all transformers in the tank including booster

transformers, preventative autotransformers, or any other transformer. These bushings shall be capable of withstanding 1500 volts D.C. The core ground bushings shall be protected with a weatherproof enclosure. Removable ground links shall be provided to ground the core ground bushing to an adjacent ground point within the enclosure. A separate accessible ground shall be brought out for the core framers in the same enclosure as the core ground.

5.19.2 A minimum of four (4) two-hole NEMA copper faced steel ground pads shall be provided. Each pad shall have two (2) holes horizontally spaced on 1 ¾ inch centers and drilled and tapped for ½ - 13 UNC thread to minimum depth of ½ inch. The pads shall be welded to the base of the main tank on all four corners.

5.19.3 The manufacturer shall provide one (1) two-hole NEMA copper faced steel pad mounted internally to the LV throat housing and one (1) two- hole NEMA copper faced steel pad mounted externally over the internally mounted pad. These pads will be used to make the transition from the X0 bushing to the outside of the LV throat.

5.19.4 A path on the HV side of the transformer shall be delineated for grounding the X0 bushing, core ground bushing, and surge arresters. This path shall be from one ground pad at the base of the transformer, up one side, across the HV side of the transformer at the top and down the opposite side of the transformer to the other grounding pad at the base of the transformer. It shall consist of one (1) hole NEMA copper faced steel pads, drilled and tapped for ½-13 UNC thread to a minimum depth of ½ inch, spaced not more than five (5) foot intervals. See Attachment V, AE Drawing No. 7D 3011-A5 for further clarifications.

5.19.5 All grounding jumpers shall be bare copper, Class AA strands or equivalent. Insulated conductor shall not be used in weather exposed area as grounding jumpers.

5.20 Handling

Lifting, moving, and jacking facilities shall be provided. The jacking/lifting lugs shall be suitable for use with 17 inch high jacks. Lifting eyes shall be provided on all covers, as well as, on the tank. Pulling eyes shall be provided for the attachment of a pulling rig for movement of the transformer along the direction of either centerline. Jacking lugs and lifting eyes shall be provided with identifying tags.

5.21 Vacuum Filling

The transformer tank, OLTC compartments, and radiators shall be capable of withstanding full vacuum.

5.22 Paint Requirements

5.22.1 The transformer and control cabinets shall be painted inside and outside. Interior of tank and tank cover shall be painted white. The interior of the control cabinets shall be painted white.

5.22.2 The finish coat shall be ANSI No. 70 light gray, except as noted in Section 5.22.3.

5.22.3 The interior of the transformer tank, the core frames, and the interior of the control cabinets shall be finished with a Federal Std. No. 595-B White No. 7875 paint or equivalent color.

5.22.4 The total finish on non-weather exposed surfaces shall be at least three (3) mils in thickness.

5.22.5 The manufacturer shall provide a skid resistant finish on the top of the transformer.

5.22.6 All primer and paint shall be lead free.

5.22.7 The manufacturer shall provide a separate non-prorated warranty on the finish for a five (5) year period. The warranty shall cover rust, rust bleed-through, flakes, paint

fading, and paint chipping. The manufacturer is responsible for paint touch-up during and immediately after the installation is complete. The manufacturer shall supply six (6) spray cans of touchup paint for each transformer.

5.23 Insulating Oil

5.23.1 The manufacturer shall be responsible for vacuum processing and filling the transformer. The manufacturer shall furnish sufficient transformer insulating oil in clean tank trucks with sealed pumps and hoses to the job site. The manufacturer shall give AE five (5) days notice of intent to deliver the oil so that personnel will be available at the job site to inspect the delivery. The tank trucks shall be certified clean and dry.

5.23.2 The oil shall conform to the latest revision of ANSI/ASTM D3487, Type II.

5.23.3 The manufacturer shall supply the following information for the oil used in the transformer during dielectric testing:

a Power factor at 25° C and 100° C

b Water content in ppm

c Dielectric when tested in accordance with ASTM D1816 using a 40 mil gap

d Interfacial tension

e Color

f Gassing coefficient, ASTM D2300-1985 (Reapproved 1991)

g Neutralization number

h Inhibitor

i PCB content

5.23.4 The manufacturer shall specify their minimum characteristics for the oil to be used in their factory and at the installation site. The characteristics of the oil at the site shall not be less than that required at the factory for testing.

5.23.5 The transformer shall have a decal noting that the oil in the transformer when filled at the site is “PCB FREE."

5.23.6 Online Dissolved Gas Analyzer Option

If an Online Dissolved Gas Analyzer is specified on a Purchase Order, the manufacturer shall install and connect one (1) 8 Gas Online Dissolved Gas Analyzer of the model specified. The analyzer shall include the following:

a. Front panel display

b. Hardened communication electronics

c. DNP3, Modbus and IEC 61850 protocols

d. RS232, RS485, Ethernet Fiber (100BaseFX) communication interfaces

e. Tank mounted with mounting location that minimizes length of oil tubing.

The approved models are:

a. Serveron

b. Morgan Shaeffer

5.24 Nameplate Requirements

5.24.1 The manufacturer shall supply all nameplates as specified in the ANSI/IEEE standards. All nameplates shall be made from non-rust stainless steel. The information contained on the nameplates shall be inscribed and painted black. All the information shall be in English and in standard non-metric units of measure.

5.24.2 The manufacturer shall indicate the total weight of cellulose insulation contained in the transformer on the main nameplate.

5.24.3 The transformer shall also be provided with an additional nameplate mounted on the control cabinet door that includes the AE Purchase Order (P. O.) Number. This additional nameplate shall have additional blank space of approximately 5”H x 8”W in size to accommodate AE’s System Unique Number (SUN) and the Bar Code of the SUN.

6. INSPECTION and TEST REQUIREMENTS

6.1 AE reserves the right to visit the manufacturing facility and to observe the transformer while undergoing construction and testing. The manufacturer may not charge AE for its right to visit the facility during construction and testing. AE shall be notified at least three weeks (3) prior to the implementation of the required tests. If three (3) weeks notice is not given before the start of testing, AE reserves the right to have the manufacturer delay the testing until the first time in which the AE inspector(s) assigned to this purchase are available. Furthermore, if the AE inspector(s) arrives on site and the transformer is not ready for testing within eight (8) hours, AE reserves the right to postpone the testing for up to three (3) weeks and the manufacturer shall reimburse the AE for any travel and labor cost incurred by AE due to manufacturer’s delays.

6.2 Delays caused by AE exercising its rights as per the above paragraph shall not relieve the manufacturer from meeting the required delivery dates.

6.3 Routine Tests

All routine tests listed in Section 8.2.1 of ANSI/IEEE C57.12.00 shall be performed on the transformer in accordance with ANSI/IEEE C57.12.90.

6.4 Additional Tests

In addition to the routine tests described in ANSI/IEEE C57.12.00, the following tests shall be made on each transformer. Unless specified otherwise, all tests shall be performed in accordance with ANSI/IEEE C57.12.90. Failure to meet any specified parameter may be the basis for rejection of the transformer. If a problem occurs during any dielectric test, which results in the lowering of the oil and repairs below the top of the core and coil assembly, all dielectric tests completed up to that point shall be repeated. All testing shall be performed with the transformer fully assembled. The bushings, oil preservation system, and heat exchangers that shall be installed on the transformer and shall be used during all the testing.

6.5 The following test sequence shall be used unless otherwise agreed upon sequence:

6.5.1 Routine Tests

6.5.2 Insulation Power Factor Tests

6.5.3 Load Loss Measurements

6.5.4 No-Load Loss and Excitation Current Measurements

6.5.5 Excitation Test-(may be moved to accommodate travel schedule)

6.5.6 Temperature Rise Test on Base Rating-(may be moved to accommodate travel schedule)

6.5.7 Temperature Rise Test on Maximum Rating-(may be moved to accommodate travel schedule)

6.5.8 Lightning Impulse Tests

6.5.9 Applied Voltage Tests

6.5.10 No-Load Loss and Excitation Current Tests (No-Load Loss Guarantee Value Established Here)

6.5.11 Noise Test

6.5.12 Induced Test - The induced test with partial discharge measurement shall be made last.

6.5.13 Auxiliary controls Test.-Including but no limited to: (Can be executed anytime during testing)

a. LTC controls-Manual and AVR

b. Temperature Controls-Manual and through gauges

c. Alarms

d. SPR Trips and Alarms

6.6 Insulation power factor tests shall be performed prior to any power frequency voltage is applied to the transformer. The testing shall be in accordance with ANSI/IEEE C57.12.90. The maximum acceptable power factor is 0.5% when corrected to 20° C.

6.7 Load Losses and Impedance

6.7.1 Measure the load losses and impedance's (HV to LV) at the following OLTC positions; Neutral, 1R, 16R, and 16L, on the self cooled ratings.

6.7.2 The method for measuring the load losses must be specified in the Offer. Only methods that have sufficient accuracy for measuring losses at low power factor are acceptable. See Section 4.4.2.

6.8 No-Load Loss and Excitation Current Tests

6.8.1 Measure no-load losses and exciting current at 90%, 100%, 110% voltage before and after the impulse tests. The values measured after the impulse tests will be used for guarantee purposes. The no-load losses and exciting current shall be measured at OLTC positions 16L, neutral, 1R, 16R, and no-load loss guarantee position, if different from 1R.

6.8.2 If the transformer has an OLTC, which uses variable volts per turn design, the no-load losses and exciting current shall be measured and guaranteed on the OLTC position having the highest no-load losses.

6.9 110% Excitation Test

6.9.1 The manufacturer shall perform a 24 hour excitation test at 110% voltage. Hourly measurement and recording of no-load losses and excitation currents shall be made and recorded.

6.9.2 Oil samples shall be taken for gas in oil analysis immediately before and after the excitation test. In addition, an oil sample shall be taken for gas in oil analysis a minimum of eight (8) hours after the completion of the excitation test. Oil samples shall be taken in accordance with the requirements of ASTM D3613 and tested in accordance with the requirements of ASTM D3612.

6.9.3 The measured gas levels shall be corrected to an equivalent 10,000 gallon oil level before comparison. The equivalent gas level will equal the measured gas level

(ppm) multiplied by 10,000 gallons divided by the oil volume of the transformer in gallons. This correction does not apply to acetylene. The maximum increases in the gas levels based on the 10,000 gallon level are as shown:

a.	Ethylene	0 ppm
b.	Methane	1 ppm
c.	Ethane	1 ppm
d.	Acetylene	less than 1 ppm (correction factor not applicable)
e.	Hydrogen	5 ppm
f.	Carbon Monoxide	5 ppm

6.9.4 The gas in oil analysis from the two (2) samples taken after the completion of the excitation tests shall be compared to the gas in oil analysis from the pretest sample. If the gases have increased by more than the limits outlined above, AE shall be contacted and a course of action determined. In general, it is expected that the manufacturer shall locate and correct any problem that results in gas values above these limits.

6.10 Temperature Rise Tests

6.10.1 Temperature rise tests made at the self cooled and maximum forced cooled ratings are required on all transformers. Temperature test data on duplicate transformers is not acceptable to fulfill this requirement.

6.10.2 The manufacturer shall measure and report both the top and bottom oil rises, cooler inlet and outlet temperature rises, and the hot spot temperatures on locations determined during design review for both the OA and the maximum forced cooled ratings.

6.10.3 The oil temperature rise and winding temperature rise tests shall be performed on the tap position that results in the maximum rises.

6.10.4 Winding resistance measurements from shut down shall be plotted and shall be used as the basis for the determination of winding time constant. The raw data, cooling curves, and other required measurements shall be included in the test report.

6.10.5 Oil samples shall be taken for gas in oil analysis immediately before and after the temperature tests. In addition, an oil sample shall be taken for gas in oil analysis a minimum of eight (8) hours after the completion of the temperature tests.

6.10.6 Oil samples shall be taken in accordance with the requirements of ASTM D3613 and tested in accordance with the requirements of ASTM D3612.

6.10.7 The measured gas levels shall be corrected to an equivalent 10,000-gallon oil level before comparison. The equivalent gas level will equal the measured gas level (ppm) multiplied by 10,000 gallons divided by the oil volume of the transformer in gallons. This correction does not apply to acetylene. The maximum increases in the gas levels based on the 10,000 gallon level are as shown:

a.	Hydrogen	15 ppm
b.	Ethylene	1 ppm
c.	Methane	2 ppm
d.	Ethane	2 ppm
e.	Acetylene	less than 1 ppm (correction factor not applicable)

f. Carbon Monoxide 20 ppm

g. Carbon Dioxide 150 ppm

6.10.8 The gas in oil analysis from the two (2) samples taken after the completion of the temperature tests shall be compared to the gas in oil analysis from the pretest sample. If the gases have increased by more than the limits outlined above, the AE shall be contacted and a course of action determined. In general, it is expected that the manufacturer shall locate and correct any problem that results in gas values above these limits.

6.10.9 The manufacturer shall measure top and bottom oil temperatures with temperature sensors in the transformer oil. External temperature measurements on the surface of piping or the tank are not acceptable.

6.11 Lightning Impulse Tests

6.11.1 All winding and neutral terminals shall be tested in accordance with ANSI/IEEE impulse test standards for the BIL specified and in accordance with this specification.

6.11.2 The voltage and current traces for all impulse tests shall be recorded utilizing HIAS computerized registration system or equivalent.

6.11.3 Discrepancies or differences on impulse test oscillograms will not be allowed except those caused by integral protective devices as outlined in ANSI/IEEE C57.12.98 and ANSI/IEEE Std 4. If such discrepancies or differences exist due to circuitry or other problems on any phase, the problem shall be corrected and all tests shall be repeated on all phases already tested.

6.11.4 If there is a substantial time delay (30 minutes or greater) between the impulse tests on any terminal, then the impulse test sequence shall be restarted on that terminal from the beginning.

6.11.5 A series of full wave, and chopped wave impulse tests on terminals H1, H2, H3, X1, X2, X3, and X0 in accordance with ANSI/IEEE C57.12.90. Strict adherence to the order of the impulse tests is required. The test sequence to be used on H1, H2, H3, X1, X2, and X3 shall be as follows:

a. one (1) Reduced Full Wave

b. one (1) Full Wave

i Compare 1st reduced wave to 1st full wave prior to first chop wave test.

c. two (2) Chopped Waves

d. one (1) Full Wave

e. one (1) Reduced Wave

f. At the completion of each terminal test, the following analysis shall take place (both voltage and current waves shall be analyzed):

i Compare 1st reduced to 2nd reduced wave

ii Compare 1st full to 2nd full wave

6.11.6 The test sequence to be used on X0 shall be as follows:

a. one (1) Reduced Full Wave

b. two (2) Full Waves

c. one (1) Reduced Full Wave

6.12 Applied Voltage Test

The applied voltage test shall be made in accordance with the current ANSI/IEEE standards on the HV, LV and neutral.

6.13 Noise Test

Transformer sound measurements shall be made on each transformer in accordance with ANSI/IEEE C57.12.90.

6.14 Induced Voltage Tests with Partial Discharge Measurements

6.14.1 The low frequency induced voltage test with partial discharge measurements shall be made in accordance with ANSI/IEEE standards as specified for Class II transformers with the following modifications.

6.14.2 Apparent partial discharge shall be measured and reported both in terms of the RIV at one MHz, generated in accordance with ANSI C57.12.90, and in terms of pico-coulombs for wide band in accordance with ANSI/IEEE C57.113.

6.14.3 RIV shall not exceed 50 microvolts at 1.5 times the maximum system voltage specified by ANSI C84.1. The measured partial discharge shall not exceed 200 pico-Coulombs.

6.14.4 The partial discharge shall be measured and recorded at the 150% level as the voltage is being increased to the enhancement level of 173%. The measured partial discharge shall not exceed 300 pico-Coulombs at the enhancement level.

6.14.5 The partial discharge shall be measured and recorded at the enhancement level.

6.14.6 The first reading at 150% following the enhancement shall be taken five (5) minutes after the voltage reaches the 150% level and every five (5) minutes thereafter for one (1) hour.

6.14.7 The partial discharge level shall not exceed 50 microvolts or 200 pico-Coulombs during the hour. The partial discharge level shall not increase more than 30 microvolts or 150 pico-Coulombs during the hour using the value at 150% prior to the enhancement as the base reading. There shall be no continuous increase during the hour or during the last 20 minutes of the hour.

6.14.8 In the event that the 50 microvolts limit or the 200 pico-Coulombs limit, the 30 microvolts increase or the 150 pico-Coulombs increase, or the continuous increase requirement are exceeded, the cause shall be determined and corrected.

6.14.9 In the event that a deviation from the specification exists, AE, in conjunction with the manufacturer, will consider available options including extended testing. The final course of action must be acceptable to AE.

6.15 Other Tests

6.15.1 A turn's ratio test shall be performed on all tap positions. Turns ratio test results should not deviate more than one-half of one percent (0.5%) from the nameplate ratio.

6.15.2 Resistance tests shall be made on all taps. Winding temperature should be recorded at the time of the test. Winding resistance test results from the different phases shall compare within one percent (1%) of adjacent windings.

6.15.3 A Doble 10 kV Excitation test shall be performed on all tap positions.

6.16 Current Transformer Tests

6.16.1 The current transformers shall be tested in accordance with ANSI/IEEE C57.1311. The testing shall include, but not be limited to, the following:

a. Ratio and phase angle

b. Excitation

c. Polarity

d. Burden

e. Winding and lead resistance

f. Insulation resistance

6.17 Control and Power Wiring Tests

6.17.1 Low frequency withstand voltage tests shall be performed on all control and secondary wiring in accordance with Section 5.16 of ANSI/IEEE C37.09. All low voltage wiring, including control and indication wiring shall be given full functional tests. Tests shall be performed on the LTC controller to ensure proper operation. Quality control and assurance tests results shall be made available to the AE inspector upon request.

6.18 Sweep Frequency Response Analysis Test (SFRA)

6.18.1 The SFRA tests shall be performed on each transformer at the factory close to in-service configuration as possible and on site as-commissioned in accordance with IEEE C57.149 Guide. The test configuration and transformer state shall be clearly documented in the test report.

6.18.2 On-Load Tap Changer (OLTC) and De-Energized Tap Changer (DETC) Positions shall be as follows:

- DETC - Nominal
- OLTC - 16R

6.19 Special Test Requirements

6.19.1 There shall be no intentional delays in the entire dielectric test sequence. The lightning impulse tests, applied voltage tests, and induced voltage tests shall be carried out continuously with minimal delays to allow only for the test circuit setup.

6.19.2 The entire test sequence as listed in Section 6.5 shall be repeated if failure occurs at any time during the test sequence that requires untanking, repairs, and or rework of the active parts.

7 Tests Reports

7.1 Three (3) sets of the certified test reports shall be provided for each transformer. The manufacturer shall also present evidence of quality control testing and proof that the transformer has passed these tests. AE shall approve the transformer quality control test results before the shipment of the transformer. All reports shall be in English and in standard non-metric units of measure.

7.2 The test reports shall be printed on 8 ½" x 11" size paper and shall be bound in a lightweight folder with the manufacturer and the serial number clearly printed on the cover.

7.3 As a minimum, the test reports shall include the following:

7.3.1 Copy of all impulse traces with a complete sequential listing of all impulses, including calibration shots and actual failure shots if any.

7.3.2 Schematic diagrams of the test circuit for all test performed and the instruments used in registering the test data.

7.3.3 Copy of the recorder chart for all temperature readings during temperature rise test and loss data during no-load loss and load loss measurements.

7.3.4 Photographic record of the manufacturing of the transformer. Digital photographs suitable for printing at 8 ½" x 11" (minimum of 3 mega pixels) shall be submitted. The AE Engineer shall approve the camera and associated equipment used to take the photographs. Digital images shall be submitted in JPEG format on Compact Disk-Recordable media. As a minimum, the following photographs shall be included:

a. Photos of each winding type

b. Photos of the core steel before installation of the windings

c. Photos of the assembled unit before tanking, including photos of the completed lead structures, the LTC, and the DETC

d. Photos of the assembled unit after tanking

7.3.5 Electronic results of the SFRA tests shall be provided for each transformer within one month of the commissioning date.

CITY OF AUSTIN ELECTRIC UTILITY DEPARTMENT

PURCHASE SPECIFICATION

FOR

138 X 69KV- 12.47 kV
30 MVA

THREE PHASE POWER TRANSFORMER

DATE	PREPARED BY	ISSUANCE/REVISION	APPROVAL PROCESS SUPV. / MATERIALS SUPV.
04/26/2002	Greg Troxell	Issuance	
05/11/2005	Greg Troxell	Revision	
09/08/2005	Greg Troxell	Revision	
02/12/2007	Homer Portillo	Revision	
07/24/2012	Homer Portillo	Revision	
07/02/2015	M. Vela de Casillas	Revision	

REASON FOR REVISION	*AFFECTED PARAGRAPHS*
Prepare specification for bid preparation.	4, 4.2.3, 4.4, 5.3.8, 5.4.3, 5.10, 5.10.4, 5.10.5, 5.11, 5.15.1, 5.17.4, 6.5, 6.10.9, 6.18, 7

This specification, until rescinded, shall apply to each future purchase and contract for the commodity described herein.
Retain for future reference.

TABLE OF CONTENTS

1 SCOPE AND CLASSIFICATION

2 APPLICABLE STANDARDS

3 FUNCTIONAL REQUIREMENTS

4 PERFORMANCE REQUIREMENTS

5 ACCESSORIES AND ADDITIONAL REQUIREMENTS

6 INSPECTION AND TEST REQUIREMENTS

ATTACHMENTS

I. TRANSFORMER BUSHING SPECIFICATION
II. TRANSFORMER/SWITCHGEAR OUTLINE
III. TRANSFORMER ONE-LINE
IV. TRANSFORMER OUTLINE
V. TRANSFORMER GROUNDING DETAIL
VI. TRANSFORMER DATA SHEET

CITY OF AUSTIN, ELECTRIC UTILITY DEPARTMENT
PURCHASE SPECIFICATION
FOR
138 X 69KV - 12.47 kV, 30 MVA
THREE PHASE POWER TRANSFORMER

1 SCOPE AND CLASSIFICATION

1.1. Scope

The City of Austin (COA) Electric Utility Department d/b/a Austin Energy (AE) sets forth this specification as the minimum requirements for operating characteristics and safety features of a 138 - 12.47 kV power transformer.

1.2. Classification

1.2.1. The transformer shall be 18/24/30 MVA three phase, three phase 138 kV Delta - 12.47 kV Wye, 65° C temperature rise with an on load tap changer (OLTC).

1.2.2. The transformer will be installed below an altitude of 1,000 meters and subjected to an annual ambient temperature variance of -25° C to +45° C. The average temperature for any twenty-four hour period will not exceed 30° C.

1.2.3 The manufacturer providing this unit shall have a minimum of 5 years of experience manufacturing power transformers meeting or exceeding this specification for the ANSI electric utility market.

2 APPLICABLE STANDARDS

2.1 Equipment supplied in accordance with this specification shall comply with the applicable provisions of the latest NEMA, IEEE, ANSI/IEEE, ASTM, NESC, NEC and ANSI standards relating to large power transformers. In case of conflict between any of the standards mentioned in this specification and the contents of this document, the AE specification shall govern.

3 FUNCTIONAL REQUIREMENTS

3.1 The transformer will be used in a step-down application electric utility distribution substation to feed 12.47 kV, wye configured, 3 phase, 4 wire, solidly grounded neutral circuits from the bus of a separately furnished metal-clad switchgear line-up. The transformer high voltage bushings will be connected to the 138 kV or 69kV transmission systems and the low voltage bushings to the 12.47 kV distribution system.

4 PERFORMANCE REQUIREMENTS

4.1 Ratings

Ratings	
Frequency	60 Hz
Phase	3
Class	ONAN/ONAF/ONAF

Voltage	
High (HV)	138,000 x 69,000 Volts DELTA, 2x (±2 ½%) TAPS, DETC
Low (LV)	12,470 Volts WYE, Solidly Grounded ± 10%, OLTC
Capacity	
Self-cooled	18 MVA
Forced-cooled	24 MVA
Forced-cooled	30 MVA
BIL	
HV (138kV-69kV)	650kV X 350kV
LV	150 kV
Neutral	150 kV
Temperature Rises	
Max Avg Winding Rise	65° C
Max Hot Spot Rise (Windings & Leads)	80° C
Maximum Top Oil Rise	65° C

Loading			
Loading Duty	Terminal	MVA	Winding Temp. Rise by Resistance
Continuous	138 x 69 kV	18/24/30	65°C
Continuous	12.47 kV	18/24/30	65°C

The transformer and all auxiliaries shall be capable of carrying overloads in accordance with ANSI/IEEE C57.91. The Offeror shall demonstrate that all auxiliaries have the adequate overload capability.

4.2.1 The neutral lead conductor and the neutral bushing shall be capable of carrying full load current. The neutral lead conductor and the neutral bushing shall also be capable of carrying all overloads in accordance with ANSI/IEEE C57.92.

4.2.2 The transformer shall be designed and manufactured to allow continuous operation at 110% voltage at no-load and at 105% voltage on the secondary winding at full load and 0.8 power factor without gassing.

4.3 Impedance

18/24/30 MVA
9.5% on 18 MVA Base
DETC, OLTC in Neutral Tap Position

The tolerance on impedances shall be in accordance with Section 9.2 of ANSI/IEEE C57.12.00.

4.4. Losses

4.4.1. The transformer losses will be used in the evaluation of the Offers. No-load and load loss values at the 1 raise OLTC position at the self-cooled (18 MVA) rating shall be supplied with the Offer and will be used in the evaluation. If the transformer has an OLTC, which uses variable volts per turn design, the no-load losses shall be guaranteed on the OLTC position having the highest no-load losses.

The Offeror shall state in the Offer the DETC and OLTC positions with the highest no-load losses as the guaranteed losses in the case of variable volts per turn design. The Offeror shall also submit with the Offer the auxiliary load at the maximum forced cooled rating for use in the evaluation.

The following life cycle costs will be used.

Cost of no-load losses	- $ 6,300/kW
Cost of load losses	- $ 3,400/kW
Auxiliary losses	- $ 1,500/kW

4.4.2. The Offeror shall submit with the Offer the maximum percent total measurement error for the no-load loss measurement and the load loss measurement systems. The errors must contain all components of the error including probable calibration errors and other uncertainties in the measurement system. Certified data for the loss measurement errors shall be submitted with the Offer. The data shall be traceable to the United States National Institute of Standards and Technology or other equivalent standardization organization. Equivalency will be determined by the AE using supporting documentation provided by the Offeror as part of the Offer. A system check to insure that all errors have been properly applied may be required. Failure to submit a loss measurement system error or the submission of an error that is obviously erroneous will result in the rejection of the Offer.

a. The maximum loss measurement error that is acceptable is ± three (3) percent as per ANSI/IEEE C57.12.00.

b. Loss measurement errors greater than ± three (3) percent will result in the rejection of the Offer.

4.4.3. The no-load losses and excitation current at room temperature after impulse tests shall be used as the guaranteed values and shall not deviate from the no-load losses and excitation current values measured before impulse tests by more than five (5) percent. If the difference between the before and after values are greater than five (5) percent, AE shall be contacted and a course of action determined. It is expected that the Offeror shall determine the cause and correct any problems that result in deviations in no-load losses and excitation current that are greater than five (5) percent. AE reserves the right to reject the transformer if satisfactory explanations or corrections are not made.

4.4.4. A transformer which, after factory testing, has losses exceeding the guaranteed losses as stated in the Offer shall have its selling price reduced. The amount of reduction will be calculated as the kW difference (actual minus guaranteed) multiplied by the evaluated cost per kW.

4.5. Short Circuit Requirements

4.5.2. The transformer shall be capable of withstanding the mechanical and thermal stresses produced by external short circuits under the conditions specified in ANSI/IEEE C57.12.00, except that allowances for system impedance's are not allowed. The available short circuit currents shall be calculated based on infinite bus source feeding the transformer.

4.5.3. The manufacturer shall investigate the different fault conditions (3 phase fault, single line to ground fault, etc.) for the various combinations of tap positions and design for the highest stress conditions.

4.5.4. The manufacturer is expected to have adequate model and full size transformer test data on which to base the acceptance criteria for stresses.

4.5.5. All windings shall be designed for Free, and Forced Buckling. The Offeror shall furnish sizing and compression procedures with the Offer. The maximum calculated stresses shall be as follows: 65% of the 0.2% yield stress for buckling stressed, 80% of the 0.2% yield stress for tensile stresses, and 65% of the elastic yield limit for tie planes.

4.5.6. Leads in the super structure of the active part shall be adequately supported to withstand the forces generated during short circuit events. Leads may not be fastened to the superstructure (cleats) with fabric tie material or polymeric cable ties. Leads are to be fastened with pressboard clamps, or purchaser approved alternative.

4.6. Audible Sound Level

The sound level shall not exceed 61 dB for the OA rating and shall not exceed 64 dB with the transformer energized and all cooling devices in operation, as measured by the procedures outlined in ANSI/IEEE C57.12.90.

5. ACCESSORIES AND ADDITIONAL REQUIREMENTS

5.1 General

5.1.1 Use 0, 1, 2, 3 for phase designation in lieu of N, A, B, C. Associate phase 1 with H1, X1, Y1, etc.

5.1.2 All manhole covers and manholes shall be round.

5.1.3 The tank cover shall be domed to prevent water from standing on the cover.

5.1.4 All nuts, bolts, and washers used on the transformer shall be non-rust stainless steel or AE engineer approved equivalent. All fasteners shall be metallic or AE engineer approved equivalent.

5.1.5 Split or star lock washers shall not be furnished as locking or clamping devices inside the tank. Double nutting, or other methods approved by AE, shall be used for locking or clamping on the lead support framework.

5.1.6 All gaskets shall be in recessed, machined grooves. All gasket surfaces shall be made up by flanges. The Offeror shall provide a copy of the flange and gasket practices and procedures with the Offer.

5.1.7 All gaskets shall be made of high temperature Viton.

5.1.8 The tank, including the cover and base, shall be designed such that, after installation, there will be no permanent deformation caused by shipping or handling. Tank welds with oil on one side shall be welded inside and outside with continuous bead welds.

5.1.9 The serial number of the transformer shall be permanently stenciled or formed by welding near the grounding pads at two locations on diagonally opposite corners.

5.1.10 The use of internal varistors is not allowed.

5.1.11 All wiring external to the control cabinets shall be run in rigid metallic galvanized conduit or AE engineer approved equivalent. Other accessories, such as thermocouple cable, shall also be run in rigid metallic galvanized conduit or AE engineer approved equivalent. Conduit entrance into the control cabinet or any junction box shall only be located on the vertical sides or the bottom. No conduit entry may be located on the top horizontal surface.

5.1.12 The Contractor shall provide the following spare components for each transformer purchased **without additional cost to AE**:

One (1) HV bushing
One (1) LV bushing
One (1) X0 bushing (if different from LV bushing)
One (1) Complete itemized set of gaskets
One (1) Fan and motor assembly
One (1) Reinhausen Vacuum bottle Lockout (VIM) protection card

These components shall be delivered to:

Austin Energy
Justin Lane Warehouse
906 Justin Lane
Austin, Texas 78758

No later than one (1) month from the delivery date of the transformer. Notification shall be made to the Contract Manager as specified in the Solicitation's Supplemental Purchase Provisions (Section 0400).

5.1.13 The Offeror shall state in the Offer, the special tools, if any, that are required for the installation and maintenance of the transformer in the Offer. In addition, the Offeror shall provide any special tools, if any, required for the installation and maintenance of the unit without additional cost to the AE.

5.1.14 Care shall be taken in the design and assembly of the transformers to reduce and to minimize vibration. The transformer shall be free from any undue or harmful vibration, which would be detrimental to the operation of the transformer, and any auxiliaries mounted on the tank or connected to the transformer. The average amplitude of all local maximum points shall not exceed 60µm (2.36 mils) peak-to-peak. The maximum amplitude within any rectangular area shall not exceed 200µm (7.87 mils) peak-to-peak.

5.1.15 An analysis of the leakage magnetic fields is required to prevent excessive heating of metallic parts. If magnetic shields are provided, the flux density in any part of the shields shall be less than saturation for the material at rated load and at any stated load in excess of nameplate rating.

5.1.16 The leakage flux analysis shall include the heating effects in leads, cables, connectors, etc. in the cleats and leads structure.

5.1.17 At rated nameplate loading, the temperature of metallic parts shall be limited to 130°C when the ambient temperature is 30°C. Tank wall temperatures shall be limited to 105°C at the same ambient temperature.

5.1.18 Leads in the super structure of the active part shall be adequately supported to withstand the forces generated during short circuit events. Leads may not be fastened to the superstructure (cleats) with fabric tie material or polymeric cable ties. Leads are to be fastened with pressboard clamps, or AE approved alternative.

5.1.19 Fall protection provisions shall be added to each transformer as described below.

a. DBI Sala - UCL aluminum fall arrester anchor post (part number: 8516691)

b. UCL advanced aluminum portable fall arrester anchor post davit arm ass'y (part number: 8516693)

c. Advanced Digital 100 series 2 speed winch with removable handle (part number: 8518564)

d. Base plate - (part number: 8517412).

5.2 Material

5.2.1 All material used in the construction of the transformer shall be new.

5.2.2 The conductor for all current carrying parts, including windings and leads, shall be copper or silver bearing copper.

5.2.3 All material used, or proposed to be used, in the transformer shall be tested, and have passed the transformer oil compatibility test using the method outlined in ASTM D3455 or AE engineer approved equivalent. The test reports shall be available upon request for AE inspection at any time during the evaluation or manufacturing process. Any material found by the AE inspector which has not had the oil compatibility test performed on it, or that the contractor can not produce oil compatibility test report for, shall be tested immediately at the contractor's expense. If the material fails the oil compatibility test, the AE will not accept the transformer until all non-compliant material is replaced.

5.2.4 All material used in the transformer shall be subject by the contractor to rigid quality assurance and control standards. The contractor shall have traceability on all material from receiving until final installation in the transformer. Material tracking and inspection reports shall be made available to the AE inspector upon request.

5.2.5 The manufacturer shall have conducted an initial vendor inspection and qualifying audit with ongoing spot checks on all material used in the transformer. Vendor inspection and audit reports shall be made available to the AE inspector upon request. Materials found by the AE inspector to have not been properly qualified for use by the contractor shall, as a general rule, be unacceptable for use in the transformer. Arrangements satisfactory to the AE inspector, up to and including the replacement of the non-qualified material, shall be made by the contractor.

5.3 Core

5.3.1 The materials and methods of construction used shall be such that the core structure will be strong, rigid, and durable, and will have permanently low losses.

5.3.2 The magnetic circuit shall be constructed of the highest-quality, non-aging grain-oriented sheet steel having high permeability and low losses.

5.3.3 Each lamination or sheet of core steel shall be free from burrs, sharp projections, rust, scales, or other conditions that may impair the operation or life of the core. Each lamination or sheet of core steel shall be sufficiently coated with a durable, oil-proof, heat-resistant insulating coating.

5.3.4 The maximum allowable burrs on the slit or cut edges of electrical steel used in the core shall not exceed 0.7 mils. Excessive edge or surface damage during manufacture may be the basis for the rejection of the core.

5.3.5 In core configurations other than step lap, the core gaps shall not be greater than 1/16". Gaps greater than 1/16" must be justified to AE during the design review.

5.3.6 Cooling surfaces and oil ducts shall be arranged so the temperature of all parts of the core will be substantially uniform and no spot in the core will reach an excessive temperature greater than 125˚ C with an ambient of 40˚ C.

5.3.7 The core and end frames shall be securely clamped and bolted to prevent vibration during operation and the core assembly shall withstand, without change of shape or position, all stresses due to shipping, handling, and short circuits. End frames, core clamping structures, and tie rods shall be constructed of steel. Core clamping structures shall be insulated from the core. The mechanical supporting structure and all other mechanical parts of the transformer shall be designed for transportation accelerations of 5g longitudinal, 3g vertical, and 1.5g transverse.

5.3.8 The core induction must meet the ANSI/IEEE requirements for continuous operation at 110% voltage no load, and with 105% voltage on the loaded winding at full load and 0.8

power factor. The maximum induction in the core at either of these conditions shall not exceed 1.93 Tesla for step-lap joints and 1.91 Tesla for non step-lap joints.

5.3.9 Bolts through the core are unacceptable.

5.3.10 Insulating materials built into and adjacent to the core shall be rated with a thermal class to operate without accelerated aging for the temperatures in the center of the core and on the surface of the core.

5.4 Insulation and Winding Construction

5.4.1 The insulation of all windings shall be capable of withstanding the dielectric tests corresponding to the basic insulation level of each winding, as specified in the ANSI standards. The voltage distribution shall be substantially uniform throughout the windings.

5.4.2 The conductors and insulation shall be designed so the formation of partial discharge will be minimized at the operating voltages specified herein.

5.4.3 The conductors shall be designed so the eddy current losses are minimized and the required mechanical strength is assured. All joints in winding conductors shall be brazed or other AE approved method. All conductors shall be carefully smoothed to remove any burrs and slivers before the insulation is applied. Conductors shall be insulated with spirally wound layers of the highest grade of cable paper. The paper shall be Dennison 22HCC or Munksjo Thermo 90, or purchaser approved equal.

5.4.4 All coils shall have each turn supported at frequent intervals by insulating spacers, which shall be locked or clamped in place and so arranged as to ensure positive and effective oil circulation. All such insulating spacers shall be compressed at high pressure before assembling in the coil stacks in order that the coil stacks shall remain permanently tight. The minimum final pressure on the coils shall be 5 N/mm^2.

5.4.5 The insulation must be designed to have a minimum margin in the oil spaces of 20% based on the Weidman oil curves. All insulation must have adequate margin for test and operating voltages, which will be reviewed at the design review.

5.4.6 Individual windings used for DETC or OLTC regulation shall be constructed with a fully distributed winding design.

5.4.7 The transient voltage analysis of the transformer shall be performed with an analytical tool that includes both the capacitive and inductive circuit elements.

5.4.8 All internal coil connections shall be welded or brazed.

5.4.9 When required, the de-energized tap changer (DETC) shall not require periodic movement for periodic maintenance. If a DETC is provided, a single external mechanism shall be provided to change the switch position in all phases. The contacts of the DETC shall be silver plated.

5.5 Thermal Performance

5.5.1 The designer will be expected to furnish the following information after the design is completed.

a) Average Winding Rises for all Windings at the OA and maximum forced cooled ratings.
b) Top and bottom oil rises for the OA and maximum forced cooled ratings.
c) Calculated hot spot rises for each winding at the OA and maximum forced cooled ratings.

The hot spot rises must be calculated using maximum localized losses, oil flow patterns, and insulation on the conductors. Allowances will not be accepted

5.5.2 The windings shall limit the overload. The hot spot of the leads shall not exceed the maximum hot spot of the windings.

5.5.3 Insulation Drying

a. The maximum water content of the insulation when received at the site shall be 0.5%.

5.5.4 The loading of the transformer shall be limited by winding temperatures and not by temperature of leads, switches, bushings, or any other ancillary device. The temperature of lead exits from the insulation structure shall be controlled to be less than or equal to 3° higher than the conductor in the winding at rated load.

5.6 Bushings

5.6.1 The bushings supplied with this transformer shall conform to the requirements of AE Purchase Specification E-1416, dated 04/15/15, with the exception that all gaskets shall be made of high temperature Viton. See Attachment I for a copy of Specification E-1416.

5.6.2 The XV (including X0) bushings shall be ABB Type LCRJ, Style #025B0300DU, or AE engineer approved equivalent. The XV bushings shall be suitable for operation in a throat at 125°C.

5.6.3 The HV bushings shall be ABB Type O Plus C, Style #1Z UA138 012-AAASEEABB, or AE engineer approved equivalent.

5.6.4 Request for variance approval shall be submitted to AE supervisor of Equipment & Materials at least (3) weeks prior to the start of design review.

5.6.5 Bushing color shall be ANSI #70 light gray.

5.6.6 The BIL ratings for the bushings shall be as follows:

Terminals	BIL	Voltage Class
HV	650 kV	138 kV
XV	150 kV	25 kV

5.6.7 The bushings shall be arranged as shown on Attachment IV, AE Drawing 7E-800.

5.6.8 All bushings shall be supplied with stud to four (4) hole NEMA pad connectors. The four (4) hole NEMA pad shall have machine milled surfaces on both sides to permit conductors to be attached to both sides. The connectors shall be suitable for connection to aluminum bus or jumpers and copper bus.

5.7 LV Throat

5.7.1 The secondary terminals shall be suitable for throat connection to switchgear via bus duct as indicated on Attachment II, AE Drawing No. 7D 283-1. The switchgear, bus duct, and secondary arresters will be provided by others.

5.7.2 The LV Throat shall be equipped with a hinged access plate constructed to swing towards the transformer tank on the bottom of the throat to provide unobstructed access to the LV bushing terminals. The access plate shall be constructed from the same material as the throat housing. The throat shall be of sufficient strength to fully support the access plate.

5.7.3 The access opening dimension shall be no less than 36" x 24" and shall be located to facilitate connections and taping of LV bus bar.

5.7.4 Provisions shall be made on the access plate and on the transformer to keep the hinged access plate in the full open position by utilizing hooks and eye bolts or other AE engineer approved equivalent.

5.7.5 The access opening shall be provided with a reusable gasket to provide a weatherproof seal when the access plate is closed and bolted to the throat housing.

5.8 Bushing Current Transformer

5.8.1 Bushing current transformers for the AE's use shall be provided. The contractor shall install bushing-type current transformers on the HV as shown in Attachment III.

5.8.2 Multi-ratio bushing current transformers shall conform to the latest ANSI/IEEE C57.13 standard. All current transformers shall be ANSI Class C800. The following CTs shall be supplied per phase:

Terminal	Number of CTs	CT ratio
HV	1	600/5 multi-ratio with ANSI Standard taps- to be located closest to the bushing
HV	2	2000/5 multi-ratio with ANSI Standard taps
X0	1	1200/5 multi-ratio with ANSI Standard taps

5.8.3 All secondary leads of current transformers shall be brought to a common outlet housing near the cover and then to the weatherproof control cabinet. At the control cabinet each lead shall be terminated on a terminal block with short circuiting provisions. Each multi-ratio current transformer shall terminate on a separate block.

5.8.4 At least two (2) circular manholes shall be provided in the cover of the main tank to allow the removal or addition of current transformers. Each manhole shall be a minimum of 24" in diameter.

5.9 Surge Arresters

5.9.1 The transformer shall be provided with metal oxide station class surge arresters. The housing for the HV surge arresters shall be polymer. Acceptable arresters and their ratings are as follows:

Arrester Ratings:

Terminals	Contractor	MCOV (kV)
H1, H2, H3	Cooper	84
	ABB	84
	Siemens	84
	GE	88

5.9.2 The contractor shall provide mounting for the arresters. The contractor shall minimize the distance between the surge arrester and the bushing.

5.9.3 The contractor shall provide a surge arrester ground pad for each arrester consisting of a tank grounding pad as specified in ANSI/IEEE C57.12.10. The grounding pad shall be mounted on the side of the tank as close as possible to the arrester.

5.9.4 All surge arresters shall be manufactured and tested in accordance with ANSI/IEEE C62.11.

5.9.5 If contractor determines corona rings are necessary, the surge arresters shall be equipped with corona rings.

5.10 De-energized Tap Changer

The transformer shall be provided with full capacity high voltage de-energized taps of:

131,100; 134,500; 138,000; 141,450; 144,900 Volts
65,550; 67,275; 69,000; 70,725; 72,450 Volts

5.10.1 Operation of the de-energized tap changer from ground level is required. The de-energized tap changer position indicator shall be visible from ground level.

5.10.2 Provisions for padlocking shall be furnished for each de-energized tap position.

5.10.3 The de-energized tap changer shall be arranged to provide for inspection and maintenance without untanking.

5.10.4 The de-energized tap changer shall not require periodic movement during the life of the transformer for preventive maintenance purposes. The contacts of the switch shall be silver plated.

5.10.5 The series/parallel switch shall not require periodic movement of the switch for preventive maintenance purposes.

5.11 On Load Tap Changer (OLTC)

5.11.1 The transformer shall be equipped with an automatic OLTC meeting the following requirements:

a. The OLTC equipment shall be the Reinhausen RMV-II with the MD-III motor drive / control cabinet with a VIM Monitoring System Model "B" Version . The OLTC cabinet shall include the accessories required to provide digital remote tap position information to SCADA via DNP 3.0 protocol. The remote tap position signal shall be accessible to AE in the main control cabinet.

b. A Beckwith M2001D regulating relay complete with the Beckwith M-2270B adapter panel shall be included in the main control cabinet with the following provisions.

a. The M-2270B shall have the following options

i. SCAMP (SCADA controllable Auto/Manual Pushbutton) switch. Requires M-2001 Series Control with firmware version D-0146V08.05.015 or later.

ii. SCADA Cutout Switch (local/remote) Blocks SCADA "write" commands.

b. The Beckwith relay shall have provisions for RAISE and LOWER operations.

c. These provisions shall not interfere with similar provisions for operation of the OLTC in the OLTC cabinet.

c. The OLTC and all associated windings shall be capable of operating at the maximum transformer rating (30 MVA) continuously.

d. The manufacturer shall provide a separate complete nameplate for the OLTC.

e. The regulating winding shall be fully distributed.

5.11.2 Provisions shall be provided for thirty-two (32) steps. All tap positions shall be full capacity. Each step will correspond to a change in voltage of 5/8 percent of center tap voltage (12.47 kV).

5.11.3 The transformer and the on load tap changer shall be designed to operate in a step-down mode. The primary purpose of the OLTC will be to keep the secondary voltage constant should the load on the 12.47 kV distribution system and/or the 138 kV system voltage vary.

5.11.4 The manufacturer shall locate the OLTC as per the requirements outlined in the preceding two paragraphs.

a The Offeror shall provide with the Offer submittal the location of the on load tap changer and a description of how it satisfies the requirements of the specification.

b The proposed control scheme to accomplish the primary mode of operation must be included in the Offer submittal.

5.11.5 The OLTC shall be accessible from ground level.

5.11.6 A table of voltages and currents for each OLTC position at the 65° C maximum nameplate rating at all tap voltages shall be provided on the nameplate.

5.11.7 The on load tap changer motor shall be mounted in the OLTC control cabinet and it shall be readily accessible with the transformer energized. The motor shall be equipped with overcurrent protection with a manual reset.

5.11.8 Provisions shall be made for the operation of the OLTC in the OLTC cabinet.

a Local or Remote operation

.i While in the REMOTE position, the transformer tap position may also be changed upon receipt of a signal from the AE's remote supervisory equipment or may be operated from the BECKWITH AVR unit. The contractor shall provide all the equipment in the transformer necessary to effect these operations. Each signal shall result in one tap position change.

.ii The LOCAL position shall allow operation from the OLTC cabinet only and disable operation from the main control cabinet or from AE's remote supervisory equipment.

b Raise or Lower switch with provisions for OFF. This shall only be allowed in the LOCAL position.

c The provisions above shall work in conjunction with the operation with controls of the OLTC in the main cabinet and included in the Beckwith relay.

5.11.9 Auxiliary contacts shall be provided for "on-tap/off-tap" status indication on remote equipment.

5.11.10 The manufacturer shall wire all equipment control wiring to a terminal strip in the control cabinet. AE will connect wiring for "Raise," "Lower," "Auto," and "Remote" to this terminal strip.

5.11.11 Auxiliary contacts shall be provided for "OLTC Upper Limit Over Travel" and "OLTC Lower Limit Over Travel" alarms to the Annunciator described in section 5.14.12.

5.11.12 The manufacturer shall provide one (1) counter to count all OLTC operations.

5.11.13 The following electrical accessories shall be provided in the OLTC control cabinet: one (1) thermostatically controlled heater to prevent condensation; one (1) 120 V, 100 W equivalent, mechanically protected fluorescent outdoor light equipped with an outdoor fixture and outdoor door-operated switch; and one (1) 120 V, 20 Amp, outlet equipped with a Ground Fault Interrupting Device (GFCI). Each accessory shall be supplied from a separately protected circuit.

5.11.14 A mechanical position indicator with maximum and minimum indicating hands shall be provided. The position indicator shall be visible through a window in the door of the OLTC control cabinet and shall also be visible from the manual control panel. The contractor shall provide a push button to reset the maximum and minimum indicating hands. The push button shall be located in the OLTC control cabinet.

5.11.15 The OLTC contacts shall be guaranteed for a minimum of 500,000 operations at full load before OLTC contact maintenance is required, regardless of rated through current. The OLTC shall be designed to achieve the full 500,000 operations on any combination of adjacent taps.

a The Offeror shall provide verification with the Offer that the selected OLTC meets the requirements contained in this section. The verification shall include, but not be limited to, the minimum number of operations before the mechanism and contacts require maintenance and the calculations used to arrive at this number.

5.11.16 The manufacturer shall provide one (1) combination 2" drain and sampling valve located at the bottom of the OLTC compartment. The sampling device shall be suitable for use with ¼" I.D. Tygon tube for taking oil samples. The valves supplied shall be Milwaukee Valve Company #506-202 or AE engineer approved equivalent.

5.11.17 The manufacturer shall provide electrically interlocked hand crank for manual operation of the OLTC.

5.11.18 The manufacturer shall provide limit switches and mechanical stops to prevent over-travel of the drive mechanism.

5.11.19 The contractor shall provide one (1) rapid pressure rise sensing unit mounted on the OLTC compartment. The unit shall be equipped with test plugs to simulate a rapid pressure rise so that the unit can be tested periodically. All wiring external to the control cabinets shall be run in rigid metallic galvanized conduit or AE engineer approved equivalent.

a The rapid pressure rise sensing unit shall be a Qualitrol Series 910 Rapid Pressure Rise Relay complete with CON-603 series connector and Standard (not ANSI) wiring diagram.

b The RPRR unit shall be mounted on a 2” gate type valve which is mounted on the transformer tank. The valves supplied shall be Milwaukee Valve Company #505-001 or AE engineer approved equivalent

c Circuitry from this device shall be connected to a seal-in relay. This seal-in relay shall be equipped with reset button, indicating light, trip (63X) and alarm contacts and shall be mounted in the main control cabinet. The seal-in relay shall be a Qualitrol Series 909-300-01 Seal-In Relay

d Indicating light shall indicate RPRR - OLTC (Rapid Pressure Rise Relay - OLTC) trip and shall remain lit until the rapid pressure rise relay has been manually reset.

e All circuitry and relays associated with the rapid pressure rise relay scheme for the OLTC shall be independent from the rapid pressure rise relay scheme for the main tank.

5.11.20 The manufacturer shall provide one (1) automatic pressure relief device, which can be reset manually, mounted on each OLTC compartment. All wiring external to the control cabinets shall be run in rigid metallic galvanized conduit or AE engineer approved equivalent. Circuitry from this device shall be routed to the main control cabinet where alarm contacts and a local trip flag shall be provided.

a The automatic pressure relief device shall be a Qualitrol Series 208 Pressure Relief Device, complete with CON-603 series connector and Standard (not ANSI) wiring diagram, and #415-P73 switch.

5.11.21 The manufacturer shall provide one (1) magnetic liquid level gauge with low liquid level alarm contacts for the OLTC.

a The manufacturer shall set the contacts of the alarm to operate when the oil level drops below normal operating level.

b The liquid level gauge shall have a six (6) inch dial.

c The magnetic liquid level gauge shall be a Qualitrol Series 032 Magnetic Liquid Level Gauge, complete with CON-603 series connector and Standard (not ANSI) wiring diagram.

5.11.22 The manufacturer shall provide terminal board points for PT terminations in the OLTC cabinet.

5.11.23 The contractor shall provide a ventilated weatherproof control cabinet with hinged doors equipped with wind latches. The doors shall provide access to the control devices and have provisions for padlocking. All cabinet and door hardware shall be non-rust stainless steel.

5.11.24 A line-drop compensator (LDC) current transformer shall be provided on the X2 bushing.

5.12 The windings of either the series transformer, or the preventive auto-transformer, shall be the same type as the main windings. The contractor shall use the same winding construction methods on all windings in the transformer including the series transformer, and the preventive auto-transformer.

5.13 All exposed rotating drive shafts and related components shall be protected from accidental contact with steel covers. The steel covers shall be of sufficient rigidity and supported to prevent deformation.

5.14 Indicating Devices

Dial type indication gauges shall be removable, have detachable covers with glass faces, and shall be water resistant. All gauges shall be readable from the ground. That is, the gauges shall be readable by a six (6) foot tall person standing four (4) feet from the base of the transformer. The contractor shall tilt the gauges to allow this, if necessary. Each terminal of every switch shall be wired separately to a terminal strip in the main control cabinet. The following indicating devices shall be included:

5.14.1 One (1) magnetic liquid level gauge with low liquid level alarm contacts for the expansion tank. The contacts shall be set by the contractor to alarm when the oil level drops below normal operating level. The liquid level gauge shall have a six (6) inch dial. The magnetic liquid level gauge shall be a Qualitrol Series 032 Magnetic Liquid Level Gauge, complete with CON-603 series connector and Standard (not ANSI) wiring diagram. Part Number: 032-018-01

5.14.2 One (1) dial type liquid temperature thermometer shall be mounted at eye level. The thermometer shall be furnished with a maximum temperature indicator needle, which can be read and reset manually through the face from ground level, and with alarm contacts wired to the main control cabinet. The thermometer shall be mounted in a thermometer well as shown in Figure 3 of ANSI/IEEE C57.12.00. The liquid thermometer shall be located adjacent to the winding temperature indicator. The liquid temperature indicator shall have a six (6) inch dial. The liquid temperature thermometer shall be a Qualitrol Series 104 Remote Thermometer Controller.

5.14.3 One (1) dial type hot spot temperature indicator mounted at eye level with thermal load indicating dials and contacts for control of forced cooling equipment shall be provided. This indicator shall be furnished with maximum temperature indicators that can be reset manually through the face at ground level. The words “Winding Temperature” shall be on the dial or on a suitable nameplate adjacent to it. The hot spot temperature indicator shall have a six (6) inch dial. The hot spot temperature thermometer shall be a Qualitrol Series 104 Remote Thermometer Controller. Part Number: 104-321-02

5.14.4 Two (2) rapid pressure rise (RPR) sensing units shall be supplied and mounted on diagonal corners of the main transformer tank. The RPR devices shall be accessible from the ground level

a The rapid pressure rise sensing unit shall be a Qualitrol Series 900 Rapid Pressure Rise Relay, complete with CON-603 series connector and Standard (not ANSI) wiring diagram

b The RPRR unit shall be mounted on a 2” gate type valve which is mounted on the transformer tank. The valves supplied shall be Milwaukee Valve Company #505-001 or AE engineer approved equivalent

c Each unit shall be equipped with test plugs to simulate a rapid pressure rise so that the unit can be tested periodically.

d Circuitry from both of these devices shall be provided to a seal-in relay. The seal-in relay shall be a Qualitrol Series 909-300-01 Seal-In Relay.

e This seal-in relay shall be equipped with reset button, indicating light, trip (63X) and alarm contacts and shall be mounted in the main control cabinet.

f Indicating light shall indicate RPRR - Main Tank (Rapid Pressure Rise Relay - Main Tank) trip and shall remain lit until the rapid pressure rise relay has been manually reset.

g All circuitry and relays associated with the rapid pressure rise relay scheme for the main tank shall be independent from the rapid pressure rise relay scheme for the OLTC.

h All wiring external to the control cabinets shall be run in rigid metallic galvanized conduit or AE engineer approved equivalent.

5.14.7 One (1) cover mounted automatic pressure relief device (PRD) for each 10,000 gallons of oil, which can be reset manually. Circuitry from these devices shall be routed to the main control cabinet where alarm contacts and a local trip flag shall be provided. The pressure relief devices shall be located such as to provide equal coverage on the cover.

a The automatic pressure relief device shall be a Qualitrol Series 208 Pressure Relief Device, complete with CON-603 series connector and Standard (not ANSI) wiring diagram, and #415-P73 switch.

b Part Number: 208-60Z (CS11471)

5.14.8 The manufacturer shall provide two (2) 2" combination upper filter and sampling valves at the top of the transformer. These valves shall be located on opposite ends on the short sides of the transformer, below the 25°C oil level, suitable for the return of filtered oil.

5.14.9 The manufacturer shall also provide two (2) 2" combination drain and sampling valves at the bottom of the transformer. These valves shall be located on opposite ends on the short sides of the transformer.

5.14.10 All four combination filter/drain and sampling valves shall be of the gate type brass valves and shall be located where there are no obstructions within 24" of the valve vicinity.

a The valves supplied shall be Milwaukee Valve Company #506-202 or AE engineer approved equivalent.

b The valves shall have 2" NPT with a threaded pipe plug on the open end. The valves shall have a built-in sampling device, which shall be located in the side of the valve between the main valve seat and the pipe plug. The sampling device shall be supplied with a 5/16" 32 threads per inch male connector equipped with a gasketed screw-on cap. The sampling device shall be suitable for use with ¼" I.D. Tygon tube for taking oil samples.

5.14.11 The manufacturer shall provide one Qualitrol Thermal Plate #2WTL-1027-1 mounted on the tank wall above the control cabinet.

5.14.12 One (1), twelve-point 125 V DC SEEKIRK Annunciator, similar to Type B1003S43 except with one (1) output alarm contact per point, shall be mounted and wired in the control cabinet with AE access to the output alarms. The Annunciator shall be equipped with plug-in modules (soldered modules not allowed). As a minimum, the following alarms shall be provided:

a. Sudden Pressure Trip (63X-1,2 Tank & 63X-3 OLTC)

b. Pressure Relief (63P-1 Tank & 63P-2 OLTC)

c. High Winding Temperature (49T) *contractor to insert alarm temp here

d. High Liquid Temperature (26Q) *contractor to insert alarm temp here

e. Low Liquid Level (71Q- 1 OLTC, 71Q-2 Tank)

f. OLTC Upper /Lower Limit

g. OLTC Vacuum Bottle Lockout (86X)

h. Regulating Relay Alarm (90)

i. Main AC Failure (27-1)

j. Fan AC Failure (27-2, 27-3)

k. OLTC AC Failure (27-4)

l. Nitrogen High/Low Pressure

5.14.13 All indicating devices mentioned in section 5.14.12 shall have their alarm and trip contacts wired to a terminal strip in the control cabinet. Connection of the indicating devices to the annunciator shall be from this terminal strip. Separate points for each sudden pressure relay alarm on the annunciators shall be provided. All alarm and relay contacts shall be rated for use at 250 volts DC.

5.14.14 The manufacturer shall provide one Schweitzer SEL 2600A00 RTD module to accept inputs from 100Ω Platinum RTDs mounted in the Qualitrol Thermal plate described in item 5.14.11.

5.14.15 All wiring external to the control cabinets shall be run in rigid metallic galvanized conduit or AE engineer approved equivalent.

5.15 Cooling Equipment

5.15.1 Removable radiators with top and bottom shutoff valves shall be provided. The radiators shall be hot dipped galvanized.

5.15.2 The control of the oil cooling devices shall be actuated by winding temperatures and shall progress in accordance with the provisions for two stage cooling as described in ANSI/IEEE C57.12.10. The contractor shall determine and set the exact values at which each cooling step takes place. These points, including that of the high temperature alarm, shall be marked on the face of the winding temperature device. In addition, a nameplate readable from ground level shall be provided to indicate the temperature values at which each event occurs.

5.15.3 In addition to normally provided controls, each set of cooling equipment shall be provided with an automatic/manual selector switch to permit operation of all cooling equipment simultaneously for test purposes. Automatic controls shall also be provided to equalize operating time on all fans. That is, each set of cooling equipment shall alternately be started.

5.15.4 All fan motors shall be 240 VAC, single phase and be equipped with sealed ball bearings and an individual thermal protective device equipped with automatic reset. Fan motors shall be arranged with suitable wiring connectors such that if defective they may be removed for maintenance without taking the transformer out of service. Fan motors shall be UL or CSA recognized. All fans shall be provided with blade guards that meet OSHA requirements.

5.16 Oil Preservation System

The oil preservation system shall be a nitrogen gas pressure system. The system shall be complete with low and high pressure alarms and all associated controls, mounted in a weatherproof compartment mounted on the side of the transformer. The bottom of the nitrogen bottle shall be no higher than 6 inches above the transformer. Alarm contacts shall be provided with leads wired to the annunciator (see 5.14.12). All door hardware and mounting hardware shall be non-rust stainless steel.

5.17 Control Cabinets

5.17.1 All current transformer (CT) circuits, alarm circuits, potential circuits, and other circuits shall be housed in a single weatherproof cabinet.

5.17.2 Current transformer circuits shall be wired to terminal strips equipped with shorting bars (General Electric Type EB-27 or AE engineer approved equivalent). All CT wiring shall be No. 10 AWG copper wire, 600 Volt insulation, NEC THW rated.

5.17.3 The control cabinet shall be accessible from ground level. The bottom of the cabinet shall be a minimum of 18 inches above the base. All cabinet and door hardware shall be non-rust stainless steel.

5.17.4 The control cabinet shall accommodate an uncut, non-magnetic bottom entrance plate large enough to handle four (4) two (2) inch rigid conduits on 3 3/8" centers. A clear path shall be provided between the conduit entrance and all terminal boards. The manufacturer shall not use any portion of this plate for wiring installed at the factory.

5.17.5 The following electrical accessories shall be provided in the main control cabinet: one (1) thermostatically controlled heater to prevent condensation; one (1) 120 V, 100 W equivalent, mechanically protected fluorescent outdoor light equipped with an outdoor fixture and outdoor door-operated switch; and one (1) 120 V, 20 Amp, dual receptacle outlet equipped with a Ground Fault Interrupting Device (GFCI). The receptacle outlet shall be accessible from the outside of the control cabinet without having to open any control cabinet doors. Each accessory shall be supplied from a separately protected circuit.

5.17.6 All transformer auxiliary wiring shall be a minimum of No. 12 AWG copper wire, 600V insulation, NEC THW rated. The auxiliary wiring shall be captivity identified at both ends and routed to the control cabinet in galvanized conduit and fittings.

5.17.7 All wiring shall be flame resistant, oil resistant, heat resistant, and moisture resistant. All wiring shall be complete and performed in a professional, workmanlike manner and bundled or contained.

5.17.8 Splices in wiring will not be allowed.

5.17.9 Each end of all conductors shall be permanently tagged and identified. The method of permanently tagging the conductor ends shall be approved by the AE engineer. Wire ends shall be permanently fitted with compression type, ring lugs before attaching securely to terminal studs.

5.17.10 The manufacturer shall design the layout of the electrical wiring in the control cabinet to segregate the contractor's wiring from the AE's wiring. Terminal boards shall be wired with one side reserved for the contractor and one side reserved for the AE. Factory wiring shall not be terminated on the side of the terminal boards reserved for AE use.

5.17.11 Terminal boards for control wiring shall be solid molded blocks, rated 600 Volts and a minimum of 30 Amperes per terminal and able to accommodate wire sizes up to and including #10 AWG wire size.

5.17.12 All control wiring shall be wired to #10-32 barrier type terminal strips properly sized to handle the loads (General Electric Type EB-25 or AE engineer approved equivalent). Terminal board covers are not desired. However, a white marking strip shall be furnished, marked, and attached so that terminal points can be identified. Terminal board points for terminating transformer AC supply for fans, pumps, OLTC drive, etc. shall accept #6 AWG and shall be rated for a minimum of 50 Amps. The use of "plug-in" terminal boards is not allowed.

5.17.13 All devices in control cabinet shall be permanently identified and marked with appropriate reference designator as shown on the contractor supplied schematic and wiring diagrams.

5.17.14 All control cabinet doors shall be supplied with wind latches. If multiple doors are used in the control cabinet, the wind latches of the inner door shall attach to the outer door.

5.17.15 The control cabinet shall be equipped with a weatherproof pocket mounted on the inside of the control cabinet door. The weatherproof pocket shall be of sufficient size to

accommodate the instruction book and all drawings. The weather pocket shall have a hinged top cover to facilitate retrieval of the instruction book and drawings. The weatherproof pocket shall not interfere with the operation of the relays inside the control cabinet with the door closed. Sufficient clearance shall be maintained between the weatherproof pocket and the devices inside the control cabinet with the doors in the closed position.

5.17.16 The control cabinet shall be equipped with a drip shield to prevent rainwater from dripping into the control cabinet with the doors in the open position.

5.18 Auxiliary and Control Power

5.18.1 AE will provide the 125 V DC, 2 wire and 120/240 V AC, 1 phase, 3 wire power sources necessary to operate the on load tap changer, cooling equipment, and control circuits.

5.18.2 The sudden pressure relays, alarm circuits, and other DC control equipment shall operate from 125 V DC.

5.18.3 Single phase 120/240 V AC and 125 V DC loads shall be supplied by molded-case circuit breakers properly sized for the loads. Molded-case circuit breakers shall be dual-rated at 240 V AC/250 V DC. Molded case circuit breakers with 50°C ambient temperature rating are to be used exclusively**. Knife switches and fuses are not allowed.** The contractor shall provide a main 120/240 Volt AC power panel and a main 125 V DC power panel. Each power panel shall be properly identified. All circuit breakers shall have an interrupting rating of 10 kA.

5.18.4 An AC failure relay and alarm shall be provided for the single phase 120/240 V AC circuits. The alarm shall have an adjustable time delay of up to 5 minutes. The contacts shall be wired to terminal blocks for AE use and to the annunciator.

5.18.5 DC failure relays and alarms shall be provided for each 125 V DC circuit. The contacts shall be wired to terminal blocks for AE use. The DC failure alarm shall monitor the incoming DC service.

5.19 Grounding

5.19.1 The manufacturer shall install external core ground test points from each individual core section to an external core ground bushing located on the top or side of the transformer. This applies to all transformers in the tank including booster transformers, preventative autotransformers, or any other transformer. These bushings shall be capable of withstanding 1500 volts D.C. The core ground bushings shall be protected with a weatherproof enclosure. Removable ground links shall be provided to ground the core ground bushing to an adjacent ground point within the enclosure. A separate accessible ground shall be brought out for the core framers in the same enclosure as the core ground.

5.19.2 A minimum of four (4) two-hole NEMA copper faced steel ground pads shall be provided. Each pad shall have two (2) holes horizontally spaced on 1 ¾ inch centers and drilled and tapped for ½ - 13 UNC thread to minimum depth of ½ inch. The pads shall be welded to the base of the main tank on all four corners.

5.19.3 The manufacturer shall provide one (1) two-hole NEMA copper faced steel pad mounted internally to the LV throat housing and one (1) two- hole NEMA copper faced steel pad mounted externally over the internally mounted pad. These pads will be used to make the transition from the X0 bushing to the outside of the LV throat.

5.19.4 A path on the HV side of the transformer shall be delineated for grounding the X0 bushing, core ground bushing, and surge arresters. This path shall be from one ground pad at the base of the transformer, up one side, across the HV side of the transformer at the top and down the opposite side of the transformer to the other grounding pad at the base of the transformer. It shall consist of one (1) hole NEMA copper faced steel pads, drilled and tapped for ½-13 UNC thread to a minimum depth of ½ inch, spaced not more

than five (5) foot intervals. See Attachment V, AE Drawing No. 7D 3011 for further clarifications.

5.19.5 All grounding jumpers shall be bare copper, Class AA strands or equivalent. Insulated conductor shall not be used in weather exposed area as grounding jumpers.

5.20 Handling

Lifting, moving, and jacking facilities shall be provided. The jacking/lifting lugs shall be suitable for use with 17 inch high jacks. Lifting eyes shall be provided on all covers, as well as, on the tank. Pulling eyes shall be provided for the attachment of a pulling rig for movement of the transformer along the direction of either centerline. Jacking lugs and lifting eyes shall be provided with identifying tags.

5.21 Vacuum Filling

The transformer tank, OLTC compartments, and radiators shall be capable of withstanding full vacuum.

5.22 Paint Requirements

5.22.1 The transformer and control cabinets shall be painted inside and outside. Interior of tank and tank cover shall be painted white. The interior of the control cabinets shall be painted white.

5.22.2 The finish coat shall be ANSI No. 70 light gray, except as noted in Section 5.22.3.

5.22.3 The interior of the transformer tank, the core frames, and the interior of the control cabinets shall be finished with a Federal Std. No. 595-B White No. 7875 paint or equivalent color.

5.22.4 The total finish on non-weather exposed surfaces shall be at least three (3) mils in thickness.

5.22.5 The manufacturer shall provide a skid resistant finish on the top of the transformer.

5.22.6 All primer and paint shall be lead free.

5.22.7 The manufacturer shall provide a separate non-prorated warranty on the finish for a five (5) year period. The warranty shall cover rust, rust bleed-through, flakes, paint fading, and paint chipping. The manufacturer is responsible for paint touch-up during and immediately after the installation is complete. The manufacturer shall supply six (6) spray cans of touchup paint for each transformer.

5.23 Insulating Oil

5.23.1 The manufacturer shall be responsible for vacuum processing and filling the transformer. The manufacturer shall furnish sufficient transformer insulating oil in clean tank trucks with sealed pumps and hoses to the job site. The manufacturer shall give AE five (5) days notice of intent to deliver the oil so that personnel will be available at the job site to inspect the delivery. The tank trucks shall be certified clean and dry.

5.23.2 The oil shall conform to the latest revision of ANSI/ASTM D3487, Type II.

5.23.3 The manufacturer shall supply the following information for the oil used in the transformer during dielectric testing:

a. Power factor at 25° C and 100° C

b. Water content in ppm

c. Dielectric when tested in accordance with ASTM D1816 using a 40 mil gap

d. Interfacial tension

e. Color

f. Gassing coefficient, ASTM D2300-1985 (Reapproved 1991)

g. Neutralization number

h. Inhibitor

i. PCB content

5.23.4 The manufacturer shall specify their minimum characteristics for the oil to be used in their factory and at the installation site. The characteristics of the oil at the site shall not be less than that required at the factory for testing.

5.23.5 The transformer shall have a decal noting that the oil in the transformer when filled at the site is “PCB FREE."

5.23.6 Online Dissolved Gas Analyzer Option

If an Online Dissolved Gas Analyzer is specified on a Purchase Order, the manufacturer shall install and connect one (1) 8 Gas Online Dissolved Gas Analyzer of the model specified. The analyzer shall include the following:

a. Front panel display

b. Hardened communication electronics

c. DNP3, Modbus and IEC 61850 protocols

d. RS232, RS485, Ethernet Fiber (100BaseFX) communication interfaces

e. Tank mounted with mounting location that minimizes length of oil tubing.

The approved models are:

a. Serveron

b. Morgan Shaeffer

5.24 Nameplate Requirements

5.24.1 The manufacturer shall supply all nameplates as specified in the ANSI/IEEE standards. All nameplates shall be made from non-rust stainless steel. The information contained on the nameplates shall be inscribed and painted black. All the information shall be in English and in standard non-metric units of measure.

5.24.2 The manufacturer shall indicate the total weight of cellulose insulation contained in the transformer on the main nameplate.

5.24.3 The transformer shall also be provided with an additional nameplate mounted on the control cabinet door that includes the AE Purchase Order (P. O.) Number. This additional nameplate shall have additional blank space of approximately 5”H x 8”W in size to accommodate AE’s System Unique Number (SUN) and the Bar Code of the SUN.

6. INSPECTION and TEST REQUIREMENTS

6.1 AE reserves the right to visit the manufacturing facility and to observe the transformer while undergoing construction and testing. The contractor may not charge AE for its right to visit the facility during construction and testing. AE shall be notified at least three weeks (3) prior to the implementation of the required tests. If three (3) weeks notice is not given before the start of testing, AE reserves the right to have the manufacturer delay the testing until the first time in which the AE inspector(s) assigned to this purchase are available. Furthermore, if the AE inspector(s) arrives on site and the transformer is not ready for testing within eight (8) hours, AE

reserves the right to postpone the testing for up to three (3) weeks and the contractor shall reimburse the AE for any travel and labor cost incurred by AE due to manufacturer's delays.

6.2 Delays caused by AE exercising its rights as per the above paragraph shall not relieve the contractor from meeting the required delivery dates.

6.3 Routine Tests

All routine tests listed in Section 8.2.1 of ANSI/IEEE C57.12.00 shall be performed on the transformer in accordance with ANSI/IEEE C57.12.90.

6.4 Additional Tests

In addition to the routine tests described in ANSI/IEEE C57.12.00, the following tests shall be made on each transformer. Unless specified otherwise, all tests shall be performed in accordance with ANSI/IEEE C57.12.90. Failure to meet any specified parameter may be the basis for rejection of the transformer. If a problem occurs during any dielectric test, which results in the lowering of the oil and repairs below the top of the core and coil assembly, all dielectric tests completed up to that point shall be repeated. All testing shall be performed with the transformer fully assembled. The bushings, oil preservation system, and heat exchangers that shall be installed on the transformer and shall be used during all the testing.

6.5 The following test sequence shall be used unless otherwise agreed upon sequence:

6.5.1 Routine Tests

6.5.2 Insulation Power Factor Tests

6.5.3 Load Loss Measurements

6.5.4 No-Load Loss and Excitation Current Measurements

6.5.5 Excitation Test-(may be moved to accommodate travel schedule)

6.5.6 Temperature Rise Test on Base Rating-(may be moved to accommodate travel schedule)

6.5.7 Temperature Rise Test on Maximum Rating-(may be moved to accommodate travel schedule)

6.5.8 Lightning Impulse Tests

6.5.9 Applied Voltage Tests

6.5.10 No-Load Loss and Excitation Current Tests (No-Load Loss Guarantee Value Established Here)

6.5.11 Noise Test

6.5.12 Induced Test - The induced test with partial discharge measurement shall be made last.

6.5.13 Auxiliary controls Test.-Including but no limited to:

a. LTC controls-Manual and AVR

b. Temperature Controls-Manual and through gauges

c. Alarms

d. SPR Trips and Alarms

6.6 Insulation power factor tests shall be performed prior to any power frequency voltage is applied to the transformer. The testing shall be in accordance with ANSI/IEEE C57.12.90. The maximum acceptable power factor is 0.5% when corrected to 20° C.

6.7 Load Losses and Impedance

6.7.1 Measure the load losses and impedance's (HV – 138 kV connection to LV and HV – 69 kV connection to LV) at the following OLTC positions; Neutral, 1R, 16R, and 16L, on the self-cooled ratings

6.7.2 The method for measuring the load losses must be specified in the Offer. Only methods that have sufficient accuracy for measuring losses at low power factor are acceptable. See Section 4.4.2.

6.8 No-Load Loss and Excitation Current Tests

a. Measure no-load losses and exciting current at 90%, 100%, 110% voltage before and after the impulse tests. The values measured after the impulse tests will be used for guarantee purposes. The no-load losses and exciting current shall be measured at OLTC positions 16L, neutral, 1R, 16R, and no-load loss guarantee position, if different from 1R.

b. If the transformer has an OLTC, which uses variable volts per turn design, the no-load losses and exciting current shall be measured and guaranteed on the OLTC position having the highest no-load losses.

6.9 110% Excitation Test

6.9.1 The manufacturer shall perform a 24 hour excitation test at 110% voltage. Hourly measurement and recording of no-load losses and excitation currents shall be made and recorded.

a. Oil samples shall be taken for gas in oil analysis immediately before and after the excitation test. In addition, an oil sample shall be taken for gas in oil analysis a minimum of eight (8) hours after the completion of the excitation test. Oil samples shall be taken in accordance with the requirements of ASTM D3613 and tested in accordance with the requirements of ASTM D3612.

b. The measured gas levels shall be corrected to an equivalent 10,000 gallon oil level before comparison. The equivalent gas level will equal the measured gas level (ppm) multiplied by 10,000 gallons divided by the oil volume of the transformer in gallons. This correction does not apply to acetylene. The maximum increases in the gas levels based on the 10,000 gallon level are as shown:

i.	Ethylene	0 ppm
ii.	Methane	1 ppm
iii.	Ethane	1 ppm
iv.	Acetylene	less than 1 ppm (correction factor not applicable)
v.	Hydrogen	5 ppm
vi.	Carbon Monoxide	5 ppm

6.9.2 The gas in oil analysis from the two (2) samples taken after the completion of the excitation tests shall be compared to the gas in oil analysis from the pretest sample. If the gases have increased by more than the limits outlined above, AE shall be contacted and a course of action determined. In general, it is expected that the contractor shall locate and correct any problem that results in gas values above these limits.

6.10 Temperature Rise Tests

6.10.1 Temperature rise tests made at the self cooled and maximum forced cooled ratings are required on all transformers. Temperature test data on duplicate transformers is not acceptable to fulfill this requirement.

6.10.2 The manufacturer shall measure and report both the top and bottom oil rises, cooler inlet and outlet temperature rises, and the hot spot temperatures on locations determined during design review for both the OA and the maximum forced cooled ratings.

6.10.3 The oil temperature rise and winding temperature rise tests shall be performed on the tap position that results in the maximum rises.

6.10.4 Winding resistance measurements from shut down shall be plotted and shall be used as the basis for the determination of winding time constant. The raw data, cooling curves, and other required measurements shall be included in the test report.

6.10.5 Oil samples shall be taken for gas in oil analysis immediately before and after the temperature tests. In addition, an oil sample shall be taken for gas in oil analysis a minimum of eight (8) hours after the completion of the temperature tests.

6.10.6 Oil samples shall be taken in accordance with the requirements of ASTM D3613 and tested in accordance with the requirements of ASTM D3612.

6.10.7 The measured gas levels shall be corrected to an equivalent 10,000-gallon oil level before comparison. The equivalent gas level will equal the measured gas level (ppm) multiplied by 10,000 gallons divided by the oil volume of the transformer in gallons. This correction does not apply to acetylene. The maximum increases in the gas levels based on the 10,000 gallon level are as shown:

a.	Hydrogen	15 ppm
b.	Ethylene	1 ppm
c.	Methane	2 ppm
d.	Ethane	2 ppm
e.	Acetylene	less than 1 ppm (correction factor not applicable)
f.	Carbon Monoxide	20 ppm
g.	Carbon Dioxide	150 ppm

6.10.8 The gas in oil analysis from the two (2) samples taken after the completion of the temperature tests shall be compared to the gas in oil analysis from the pretest sample. If the gases have increased by more than the limits outlined above, the AE shall be contacted and a course of action determined. In general, it is expected that the manufacturer shall locate and correct any problem that results in gas values above these limits.

6.10.9 The manufacturer shall measure top and bottom oil temperatures with temperature sensors in the transformer oil. External temperature measurements on the surface of piping or the tank are not acceptable.

6.11 Lightning Impulse Tests

6.11.1 All winding and neutral terminals shall be tested in accordance with ANSI/IEEE impulse test standards for the BIL specified and in accordance with this specification.

6.11.2 The voltage and current traces for all impulse tests shall be recorded utilizing HIAS computerized registration system or equivalent.

6.11.3 Discrepancies or differences on impulse test oscillograms will not be allowed except those caused by integral protective devices as outlined in ANSI/IEEE C57.12.98 and ANSI/IEEE Standard 4. If such discrepancies or differences exist due to circuitry or other problems on any phase, the problem shall be corrected and all tests shall be repeated on all phases already tested.

6.11.4 If there is a substantial time delay (30 minutes or greater) between the impulse tests on any terminal, then the impulse test sequence shall be restarted on that terminal from the beginning.

6.11.5 A series of full wave, and chopped wave impulse tests on terminals H1, H2, H3, X1, X2, X3, and X0 in accordance with ANSI/IEEE C57.12.90. Strict adherence to the order of the impulse tests is required. The test sequence to be used on H1, H2, H3, X1, X2, and X3 shall be as follows:

a. one (1) Reduced Full Wave

b. one (1) Full Wave

i. Compare 1st reduced wave to 1st full wave prior to first chop wave test.

c. two (2) Chopped Waves

d. one (1) Full Wave

e. one (1) Reduced Wave

f. At the completion of each terminal test, the following analysis shall take place (both voltage and current waves shall be analyzed):

i. Compare 1st reduced to 2nd reduced wave

ii. Compare 1st full to 2nd full wave

g. The test sequence to be used on X0 shall be as follows:

i. one (1) Reduced Full Wave

ii. two (2) Full Waves

iii. one (1) Reduced Full Wave

6.12 Applied Voltage Test

The applied voltage test shall be made in accordance with the current ANSI/IEEE standards on the HV, LV and Neutral.

6.13 Noise Test

Transformer sound measurements shall be made on each transformer in accordance with ANSI/IEEE C57.12.90.

6.14 Induced Voltage Tests with Partial Discharge Measurements

6.14.1 The low frequency induced voltage test with partial discharge measurements shall be made in accordance with ANSI/IEEE standards as specified for Class II transformers with the following modifications.

6.14.2 Apparent partial discharge shall be measured and reported both in terms of the RIV at one MHz, generated in accordance with ANSI C57.12.90, and in terms of pico-coulombs for wide band in accordance with ANSI/IEEE C57.113.

6.14.3 RIV shall not exceed 50 microvolts at 1.5 times the maximum system voltage specified by ANSI C84.1. The measured partial discharge shall not exceed 200 pico-Coulombs.

6.14.4 The partial discharge shall be measured and recorded at the 150% level as the voltage is being increased to the enhancement level of 173%. The measured partial discharge shall not exceed 300 pico-Coulombs at the enhancement level.

6.14.5 The partial discharge shall be measured and recorded at the enhancement level.

6.14.6 The first reading at 150% following the enhancement shall be taken five (5) minutes after the voltage reaches the 150% level and every five (5) minutes thereafter for one (1) hour.

6.14.7 The partial discharge level shall not exceed 50 microvolts or 200 pico-Coulombs during the hour. The partial discharge level shall not increase more than 30 microvolts or 150

pico-Coulombs during the hour using the value at 150% prior to the enhancement as the base reading. There shall be no continuous increase during the hour or during the last 20 minutes of the hour.

6.14.8 In the event that the 50 microvolts limit or the 200 pico-Coulombs limit, the 30 microvolts increase or the 150 pico-Coulombs increase, or the continuous increase requirement are exceeded, the cause shall be determined and corrected.

6.14.9 In the event that a deviation from the specification exists, AE, in conjunction with the contractor, will consider available options including extended testing. The final course of action must be acceptable to AE.

6.15 Other Tests

6.15.1 A turn's ratio test shall be performed on all tap positions. Turns ratio test results should not deviate more than one-half of one percent (0.5%) from the nameplate ratio.

6.15.2 Resistance tests shall be made on all taps. Winding temperature should be recorded at the time of the test. Winding resistance test results from the different phases shall compare within one percent (1%) of adjacent windings.

6.15.3 A Doble 10 kV Excitation test shall be performed on all tap positions.

6.16 Current Transformer Tests

6.16.1 The current transformers shall be tested in accordance with ANSI/IEEE C57.1311. The testing shall include, but not be limited to, the following:

a. Ratio and phase angle

b. Excitation

c. Polarity

d. Burden

e. Winding and lead resistance

f. Insulation resistance

6.17 Control and Power Wiring Tests

Low frequency withstand voltage tests shall be performed on all control and secondary wiring in accordance with Section 5.16 of ANSI/IEEE C37.09. All low voltage wiring, including control and indication wiring, shall be given full functional tests. Tests shall be performed on the LTC controller to ensure proper operation. Quality control and assurance tests results shall be made available to the AE inspector upon request.

6.18 Sweep Frequency Response Analysis Test (SFRA)

6.18.1 The SFRA tests shall be performed on each transformer at the factory close to in-service configuration as possible and on site as-commissioned in accordance with IEEE C57.149 Guide. The test configuration and transformer state shall be clearly documented in the test report.

6.18.2 On-Load Tap Changer (OLTC) and De-Energized Tap Changer (DETC) Positions shall be as follows:

- **DETC – Nominal**
- **OLTC – 16R**

6.19 Special Test Requirements

6.19.1 There shall be no intentional delays in the entire dielectric test sequence. The lightning impulse tests, applied voltage tests, and induced voltage tests shall be carried out continuously with minimal delays to allow only for the test circuit setup.

6.19.2 The entire test sequence as listed in Section 6.5 shall be repeated if failure occurs at any time during the test sequence that requires untanking, repairs, and or rework of the active parts.

7 Tests Reports

7.1 Three (3) sets of the certified test reports shall be provided for each transformer. The manufacturer shall also present evidence of quality control testing and proof that the transformer has passed these tests. AE shall approve the transformer quality control test results before the shipment of the transformer. All reports shall be in English and in standard non-metric units of measure.

7.2 The test reports shall be printed on 8 ½" x 11" size paper and shall be bound in a lightweight folder with the contractor and the serial number clearly printed on the cover.

7.3 As a minimum, the test reports shall include the following:

7.3.1 Copy of all impulse traces with a complete sequential listing of all impulses, including calibration shots and actual failure shots if any.

7.3.2 Schematic diagrams of the test circuit for all test performed and the instruments used in registering the test data.

7.3.3 Copy of the recorder chart for all temperature readings during temperature rise test and loss data during no-load loss and load loss measurements.

7.3.4 Photographic record of the manufacturing of the transformer. Digital photographs suitable for printing at 8 ½" x 11" (minimum of 3 mega pixels) shall be submitted. The AE Engineer shall approve the camera and associated equipment used to take the photographs. Digital images shall be submitted in JPEG format on Compact Disk-Recordable media. As a minimum, the following photographs shall be included:

a. Photos of each winding type

b. Photos of the core steel before installation of the windings

c. Photos of the assembled unit before tanking, including photos of the completed lead structures, the LTC, and the DETC

d. Photos of the assembled unit after tanking

7.3.5 Electronic results of the SFRA tests shall be provided for each transformer within one month of the commissioning date.

CITY OF AUSTIN ELECTRIC UTILITY DEPARTMENT

PURCHASE SPECIFICATION

FOR

138 X 69KV- 35 kV
42/56/70 MVA

THREE PHASE POWER TRANSFORMER

DATE	PREPARED BY	ISSUANCE/REVISION	APPROVAL PROCESS SUPV. / MATERIALS SUPV.
07/24/2012	Homer Portillo	Issuance	
07/02/2015	M. Vela de Casillas	Revision	

REASON FOR REVISION	*AFFECTED PARAGRAPHS*
Prepare specification for bid solicitation	4, 4.2, 5.3.8, 5.4.3, 5.6, 5.10, 5.10.4, 5.10.5, 5.11, 5.15.1, 5.17.4, 6.5, 6.10.9, 6.11, 6.18, 7

This specification, until rescinded, shall apply to each future purchase and contract for the commodity described herein.
Retain for future reference.

TABLE OF CONTENTS

1 SCOPE AND CLASSIFICATION

2 APPLICABLE STANDARDS

3 FUNCTIONAL REQUIREMENTS

4 PERFORMANCE REQUIREMENTS

5 ACCESSORIES AND ADDITIONAL REQUIREMENTS

6 INSPECTION AND TEST REQUIREMENTS

ATTACHMENTS

I. TRANSFORMER BUSHING SPECIFICATION
II. TRANSFORMER/SWITCHGEAR OUTLINE
III. TRANSFORMER ONE-LINE
IV. TRANSFORMER OUTLINE
V. TRANSFORMER GROUNDING DETAIL
VI. TRANSFORMER DATA SHEET

CITY OF AUSTIN, ELECTRIC UTILITY DEPARTMENT
PURCHASE SPECIFICATION
FOR
138 X 69KV - 35 kV, 42/56/70 MVA
THREE PHASE POWERTRANSFORMER

1 SCOPE AND CLASSIFICATION

1.1. Scope

The City of Austin (COA) Electric Utility Department d/b/a Austin Energy (AE) sets forth this specification as the minimum requirements for operating characteristics and safety features of a 138 - 35 kV power transformer.

1.2. Classification

1.2.1. The transformer shall be 42/56/70 MVA three phase 138 kV Delta - 35 kV Wye, 65° C temperature rise with an on load tap changer (OLTC).

1.2.2. The transformer will be installed below an altitude of 1,000 meters and subjected to an annual ambient temperature variance of -25° C to +45° C. The average temperature for any twenty-four hour period will not exceed 30° C.

1.2.3 The manufacturer providing this unit shall have a minimum of 5 years of experience manufacturing power transformers in accordance with this specification for the ANSI electric utility market.

2 APPLICABLE STANDARDS

2.1 Equipment supplied in accordance with this specification shall comply with the applicable provisions of the latest NEMA, IEEE, ANSI/IEEE, ASTM, NESC, NEC and ANSI standards (including but not limited to C57) relating to large power transformers. In case of conflict between any of the standards mentioned in this specification and the contents of this document, the AE specification shall govern.

3 FUNCTIONAL REQUIREMENTS

3.1 The transformer will be used in a step-down application electric utility distribution substation to feed 35 kV, wye configured, 3 phase, 4 wire, solidly grounded neutral circuits from the bus of a separately furnished metal-clad switchgear line-up. The transformer will be used from the 138 kV or 69kV transmission systems to the 35 kV distribution systems.

4 PERFORMANCE REQUIREMENTS

4.1

Ratings	
Frequency	60 Hz
Phase	3
Class	ONAN/ONAF/ONAF

Voltage	
High (HV)	138,000 x 69,000 Volts DELTA, 2x (±2 ½%) TAPS, DETC
Low (LV)	34,500 Volts WYE, Resistive Grounded ± 10%, OLTC
Capacity	
Self-cooled	42 MVA
Forced-cooled	56 MVA
Forced-cooled	70 MVA
BIL	
HV (138kV-69kV)	650kV X 350kV
LV	200 kV
Neutral	150 kV
Temperature Rises	
Maximum Average Winding Rise	65° C
Maximum Hot Spot Rise (Windings & Leads)	80° C
Maximum Top Oil Rise	65° C

Loading			
Loading Duty	Terminal	MVA	Winding Temp. Rise by Resistance
Continuous	138 x 69 kV	42/56/70	65°C
Continuous	35 kV	42/56/70	65°C

4.2 The transformer and all auxiliaries shall be capable of carrying overloads in accordance with ANSI/IEEE C57.91. The Offeror shall demonstrate that all auxiliaries have the adequate overload capability.

4.2.1 The neutral lead conductor and the neutral bushing shall be capable of carrying full load current. The neutral lead conductor and the neutral bushing shall also be capable of carrying all overloads in accordance with ANSI/IEEE C57.92.

4.2.2 The transformer shall be designed and manufactured to allow continuous operation at 110% voltage at no-load and at 105% voltage on the secondary winding at full load and 0.8 power factor without gassing.

4.3 Impedance

42/56/70 MVA
10.5% on 42 MVA Base
DETC, OLTC in Neutral Tap Position

The tolerance on impedances shall be in accordance with Section 9.2 of ANSI/IEEE C57.12.00.

4.4. Losses

4.4.1. The transformer losses will be used in the evaluation of the Offers. No-load and load loss values at the 1 raise OLTC position at the self cooled (42 MVA) rating shall be supplied with the Offer and will be used in the evaluation. If the transformer has an OLTC, which uses variable volts per turn design, the no-load losses shall be guaranteed on the OLTC position having the highest no-load losses.

The Offerer shall state in the Offer the DETC and OLTC positions with the highest no-load losses as the guaranteed losses in the case of variable volts per turn design. The Offeror shall also submit with the Offer the auxiliary load at the maximum forced cooled rating for use in the evaluation.

The following life cycle costs will be used.

Cost of no-load losses	- $ 6,300/kW
Cost of load losses	- $ 3,400/kW
Auxiliary losses	- $ 1,500/kW

4.4.2. The Offeror shall submit with the Offer the maximum percent total measurement error for the no-load loss measurement and the load loss measurement systems. The errors must contain all components of the error including probable calibration errors and other uncertainties in the measurement system. Certified data for the loss measurement errors shall be submitted with the Offer. The data shall be traceable to the United States National Institute of Standards and Technology or other equivalent standardization organization. Equivalency will be determined by AE using supporting documentation provided by the Offer as part of the Offer. A system check to insure that all errors have been properly applied may be required. Failure to submit a loss measurement system error or the submission of an error that is obviously erroneous will result in the rejection of the Offer.

a. The maximum loss measurement error that is acceptable is ± three (3) percent as per ANSI/IEEE C57.12.00.

b. Loss measurement errors greater than ± three (3) percent will result in the rejection of the Offer.

4.4.3. The no-load losses and excitation current at room temperature after impulse tests shall be used as the guaranteed values and shall not deviate from the no-load losses and excitation current values measured before impulse tests by more than five (5) percent. If the difference between the before and after values are greater than five (5) percent, AE shall be contacted and a course of action determined. It is expected that the Offeror shall determine the cause and correct any problems that result in deviations in no-load losses and excitation current that are greater than five (5) percent. AE reserves the right to reject the transformer if satisfactory explanations or corrections are not made.

4.4.4. A transformer which, after factory testing, has losses exceeding the guaranteed losses as stated in the Offer shall have its selling price reduced. The amount of reduction will be calculated as the kW difference (actual tested minus calculated guaranteed) multiplied by the evaluated cost per kW.

4.5. Short Circuit Requirements

4.5.2. The transformer shall be capable of withstanding the mechanical and thermal stresses produced by external short circuits under the conditions specified in ANSI/IEEE C57.12.00, except that allowances for system impedance's are not allowed. The available short circuit currents shall be calculated based on infinite bus source feeding the transformer.

4.5.3. The manufacturer shall investigate the different fault conditions (3 phase fault, single line to ground fault, etc.) for the various combinations of tap positions and design for the highest stress conditions.

4.5.4. The manufacturer is expected to have adequate model and full size transformer test data on which to base the acceptance criteria for stresses.

4.5.5. All windings shall be designed for Free, and Forced Buckling. The Offeror shall furnish sizing and compression procedures with the Offer. The maximum calculated stresses shall be as follows: 65% of the 0.2% yield stress for buckling stressed, 80% of the 0.2% yield stress for tensile stresses, and 65% of the elastic yield limit for tie planes.

4.5.6. Leads in the super structure of the active part shall be adequately supported to withstand the forces generated during short circuit events. Leads may not be fastened to the superstructure (cleats) with fabric tie material or polymeric cable ties. Leads are to be fastened with pressboard clamps, or purchaser approved alternative.

4.6. Audible Sound Level

The sound level shall not exceed 61 dB for the OA rating and shall not exceed 64 dB with the transformer energized and all cooling devices in operation, as measured by the procedures outlined in ANSI/IEEE C57.12.90.

5. ACCESSORIES AND ADDITIONAL REQUIREMENTS

5.1 General

5.1.1 Use 0, 1, 2, 3 for phase designation in lieu of N, A, B, C. Associate phase 1 with H1, X1, Y1, etc.

5.1.2 All manhole covers and manholes shall be round.

5.1.3 The tank cover shall be domed to prevent water from standing on the cover.

5.1.4 All nuts, bolts, and washers used on the transformer shall be non-rust stainless steel or AE engineer approved equivalent. All fasteners shall be metallic or AE engineer approved equivalent.

5.1.5 Split or star lock washers shall not be furnished as locking or clamping devices inside the tank. Double nutting, or other methods approved by AE, shall be used for locking or clamping on the lead support framework.

5.1.6 All gaskets shall be in recessed, machined grooves. All gasket surfaces shall be made up by flanges. The Offeror shall provide a copy of the flange and gasket practices and procedures with the Offer submittal.

5.1.7 All gaskets shall be made of high temperature Viton.

5.1.8 The tank, including the cover and base, shall be designed such that, after installation, there will be no permanent deformation caused by shipping or handling. Tank welds with oil on one side shall be welded inside and outside with continuous bead welds.

5.1.9 The serial number of the transformer shall be permanently stenciled or formed by welding near the grounding pads at two locations on diagonally opposite corners.

5.1.10 The use of internal varistors is not allowed.

5.1.11 All wiring external to the control cabinets shall be run in rigid metallic galvanized conduit or AE engineer approved equivalent. Other accessories, such as thermocouple cable, shall also be run in rigid metallic galvanized conduit or AE engineer approved equivalent. Conduit entrance into the control cabinet or any junction box shall only be located on the vertical sides or the bottom. No conduit entry may be located on the top horizontal surface.

5.1.12 The contractor shall provide the following spare components for each transformer purchased **without additional cost to AE**.

One (1) HV bushing
One (1) LV bushing
One (1) X0 bushing (if different from LV bushing)
One (1) Complete itemized set of gaskets
One (1) Fan and motor assembly
One (1) Reinhausen Vacuum bottle Lockout (VIM) protection card

These components shall be delivered to:

Austin Energy
Justin Lane Warehouse
906 Justin Lane
Austin, Texas 78758

No later than one (1) month from the delivery date of the transformer. Notification shall be made to the Contract Manager as specified in the solicitation's Supplemental Purchase Provisions (Section 0400).

5.1.13 The Offeror shall state in the Offer the special tools that are required for the installation and maintenance of the transformer. In addition, the Offeror shall provide any special tools required for the installation and maintenance of the unit without additional cost to the City.

5.1.14 Care shall be taken in the design and assembly of the transformers to reduce and to minimize vibration. The transformer shall be free from any undue or harmful vibration, which would be detrimental to the operation of the transformer, and any auxiliaries mounted on the tank or connected to the transformer. The average amplitude of all local maximum points shall not exceed 60μm (2.36 mils) peak-to-peak. The maximum amplitude within any rectangular area shall not exceed 200μm (7.87 mils) peak-to-peak.

5.1.15 An analysis of the leakage magnetic fields is required to prevent excessive heating of metallic parts. If magnetic shields are provided, the flux density in any part of the shields shall be less than saturation for the material at rated load and at any stated load in excess of nameplate rating.

5.1.16 The leakage flux analysis shall include the heating effects in leads, cables, connectors, etc. in the cleats and leads structure.

5.1.17 At rated nameplate loading, the temperature of metallic parts shall be limited to 130°C when the ambient temperature is 30°C. Tank wall temperatures shall be limited to 105°C at the same ambient temperature.

5.1.18 Leads in the super structure of the active part shall be adequately supported to withstand the forces generated during short circuit events. Leads may not be fastened to the superstructure (cleats) with fabric tie material or polymeric cable ties. Leads are to be fastened with pressboard clamps, or purchaser approved alternative.

5.1.19 Fall protection provisions shall be added to each transformer as described below.

a. DBI Sala - UCL aluminum fall arrester anchor post (part number: 8516691)

b. UCL advanced aluminum portable fall arrester anchor post davit arm ass'y (part number: 8516693)

c. Advanced Digital 100 series 2 speed winch with removable handle (part number: 8518564)

d. Base plate - (part number: 8517412).

5.2 Material

5.2.1 All material used in the construction of the transformer shall be new.

5.2.2 The conductor for all current carrying parts, including windings and leads, shall be copper or silver bearing copper.

5.2.3 All material used, or proposed to be used, in the transformer shall be tested, and have passed the transformer oil compatibility test using the method outlined in ASTM D3455 or AE engineer approved equivalent. The test reports shall be available upon request for AE inspection at any time during the evaluation or manufacturing process. Any material found by the AE inspector which has not had the oil compatibility test performed on it, or that the contractor can not produce oil compatibility test report for, shall be tested immediately at the contractor's expense. If the material fails the oil compatibility test, the AE will not accept the transformer until all non-compliant material is replaced.

5.2.4 All material used in the transformer shall be subject by the contractor to rigid quality assurance and control standards. The contractor shall have complete traceability on all material from receiving until final installation in the transformer. Material tracking and inspection reports shall be made available to the AE inspector upon request.

5.2.5 The manufacturer shall have conducted an initial vendor inspection and qualifying audit with ongoing spot checks on all material used in the transformer. Vendor inspection and audit reports shall be made available to the AE inspector upon request. Materials found by the AE inspector to have not been properly qualified for use by the contractor shall, as a general rule, be unacceptable for use in the transformer. Arrangements satisfactory to the AE inspector, up to and including the replacement of the non-qualified material, shall be made by the contractor.

5.3 Core

5.3.1 The materials and methods of construction used shall be such that the core structure will be strong, rigid, and durable, and will have permanently low losses.

5.3.2 The magnetic circuit shall be constructed of the highest-quality, non-aging grain-oriented sheet steel having high permeability and low losses.

5.3.3 Each lamination or sheet of core steel shall be free from burrs, sharp projections, rust, scales, or other conditions that may impair the operation or life of the core. Each lamination or sheet of core steel shall be sufficiently coated with a durable, oil-proof, heat-resistant insulating coating.

5.3.4 The maximum allowable burrs on the slit or cut edges of electrical steel used in the core shall not exceed 0.7 mils. Excessive edge or surface damage during manufacture may be the basis for the rejection of the core.

5.3.5 In core configurations other than step lap, the core gaps shall not be greater than 1/16". Gaps greater than 1/16" must be justified to AE during the design review.

5.3.6 Cooling surfaces and oil ducts shall be arranged so the temperature of all parts of the core will be substantially uniform and no spot in the core will reach an excessive temperature greater than 125˚ C with an ambient of 40˚ C.

5.3.7 The core and end frames shall be securely clamped and bolted to prevent vibration during operation and the core assembly shall withstand, without change of shape or position, all stresses due to shipping, handling, and short circuits. End frames, core clamping structures, and tie rods shall be constructed of steel. Core clamping structures shall be insulated from the core. The mechanical supporting structure and all other mechanical parts of the transformer shall be designed for transportation accelerations of 5g longitudinal, 3g vertical, and 1.5g transverse.

5.3.8 The core induction must meet the ANSI/IEEE requirements for continuous operation at 110% voltage no load, and with 105% voltage on the loaded winding at full load and 0.8 power factor. The maximum induction in the core at either of these conditions shall not exceed 1.93 Tesla for step-lap joints and 1.91 Tesla for non step-lap joints.

5.3.9 Bolts through the core are unacceptable.

5.3.10 Insulating materials built into and adjacent to the core shall be rated with a thermal class to operate without accelerated aging for the temperatures in the center of the core and on the surface of the core.

5.4 Insulation and Winding Construction

5.4.1 The insulation of all windings shall be capable of withstanding the dielectric tests corresponding to the basic insulation level of each winding, as specified in the ANSI standards. The voltage distribution shall be substantially uniform throughout the windings.

5.4.2 The conductors and insulation shall be designed so the formation of partial discharge will be minimized at the operating voltages specified herein.

5.4.3 The conductors shall be designed so the eddy current losses are minimized and the required mechanical strength is assured. All joints in winding conductors shall be brazed or other AE approved method. All conductors shall be carefully smoothed to remove any burrs and slivers before the insulation is applied. Conductors shall be insulated with spirally wound layers of the highest grade of cable paper. The paper shall be Dennison 22HCC or Munksjo Thermo 90, or purchaser approved equal.

5.4.4 All coils shall have each turn supported at frequent intervals by insulating spacers, which shall be locked or clamped in place and so arranged as to ensure positive and effective oil circulation. All such insulating spacers shall be compressed at high pressure before assembling in the coil stacks in order that the coil stacks shall remain permanently tight. The minimum final pressure on the coils shall be 5 N/mm^2.

5.4.5 The insulation must be designed to have a minimum margin in the oil spaces of 20% based on the Weidman oil curves. All insulation must have adequate margin for test and operating voltages, which will be reviewed at the design review.

5.4.6 Individual windings used for DETC or OLTC regulation shall be constructed with a fully distributed winding design.

5.4.7 The transient voltage analysis of the transformer shall be performed with an analytical tool that includes both the capacitive and inductive circuit elements.

5.4.8 All internal coil connections shall be welded or brazed.

5.4.9 When required, the de-energized tap changer (DETC) shall not require periodic movement for periodic maintenance. If a DETC is provided, a single external mechanism shall be provided to change the switch position in all phases. The contacts of the DETC shall be silver plated.

5.5 Thermal Performance

5.5.1 The designer will be expected to furnish the following information after the design is completed.

a. Average Winding Rises for all Windings at the OA and maximum forced cooled ratings.
b. Top and bottom oil rises for the OA and maximum forced cooled ratings.
c. Calculated hot spot rises for each winding at the OA and maximum forced cooled ratings.

The hot spot rises must be calculated using maximum localized losses, oil flow patterns, and insulation on the conductors. Allowances will not be accepted

5.5.2 The windings shall limit the overload. The hot spot of the leads shall not exceed the maximum hot spot of the windings.

5.5.3 Insulation Drying

a. The maximum water content of the insulation when received at the site shall be 0.5%.

5.5.4 The loading of the transformer shall be limited by winding temperatures and not by temperature of leads, switches, bushings, or any other ancillary device. The temperature of lead exits from the insulation structure shall be controlled to be less than or equal to 3° higher than the conductor in the winding at rated load.

5.6 Bushings

5.6.1 The bushings supplied with this transformer shall conform to the requirements of AE Purchase Specification E-1416, dated 04/17/15, with the exception that all gaskets shall be made of high temperature Viton. See Attachment I for a copy of Specification E-1416.

5.6.2 The XV (including X0) bushings shall be ABB Type LCRJ, Style #025B0300DU, or AE engineer approved equivalent. The XV bushings shall be suitable for operation in a throat at 125°C.

5.6.3 The HV bushings shall be ABB Type O Plus C, Style #1Z UA138 012-AAASEEABB, or AE engineer approved equivalent.

5.6.4 Bushing color shall be ANSI #70 light gray.

5.6.5 The BIL ratings for the bushings shall be as follows:

Terminals	BIL	Voltage Class
HV	650 kV	138 kV
XV	200 kV	25 kV

5.6.7 The bushings shall be arranged as shown on Attachment IV, AE Drawing 7E-800.

5.6.8 All bushings shall be supplied with stud to four (4) hole NEMA pad connectors. The four (4) hole NEMA pad shall have machine milled surfaces on both sides to permit conductors to be attached to both sides. The connectors shall be suitable for connection to aluminum bus or jumpers and copper bus.

5.7 LV Throat

5.7.1 The secondary terminals shall be suitable for throat connection to switchgear via bus duct as indicated on Attachment II, AE Drawing No. 7D 283-1. The switchgear, bus duct, and secondary arresters will be provided by others.

5.7.2 The LV Throat shall be equipped with a hinged access plate constructed to swing towards the transformer tank on the bottom of the throat to provide unobstructed access to the LV bushing terminals. The access plate shall be constructed from the

same material as the throat housing. The throat shall be of sufficient strength to fully support the access plate.

5.7.3 The access opening dimension shall be no less than 36" x 24" and shall be located to facilitate connections and taping of LV bus bar.

5.7.4 Provisions shall be made on the access plate and on the transformer to keep the hinged access plate in the full open position by utilizing hooks and eye bolts or other AE engineer approved equivalent.

5.7.5 The access opening shall be provided with a reusable gasket to provide a weatherproof seal when the access plate is closed and bolted to the throat housing.

5.8 Bushing Current Transformer

5.8.1 Bushing current transformers for the AE's use shall be provided. The contractor shall install bushing-type current transformers on the HV as shown in Attachment III.

5.8.2 Multi-ratio bushing current transformers shall conform to the latest ANSI/IEEE C57.13 standard. All current transformers shall be ANSI Class C800. The following CTs shall be supplied per phase:

Terminal	Number of CTs	CT ratio
HV	1	600/5 multi-ratio with ANSI Standard taps- to be located closest to the bushing
HV	2	2000/5 multi-ratio with ANSI Standard taps
X0	1	1200/5 multi-ratio with ANSI Standard taps

5.8.3 All secondary leads of current transformers shall be brought to a common outlet housing near the cover and then to the weatherproof control cabinet. At the control cabinet each lead shall be terminated on a terminal block with short circuiting provisions. Each multi-ratio current transformer shall terminate on a separate block.

5.8.4 At least two (2) circular manholes shall be provided in the cover of the main tank to allow the removal or addition of current transformers. Each manhole shall be a minimum of 24" in diameter.

5.9 Surge Arresters

5.9.1 The transformer shall be provided with metal oxide station class surge arresters. The housing for the HV surge arresters shall be polymer. Acceptable arresters and their ratings are as follows:

Arrester Ratings:

Terminals	Contractor	MCOV (kV)
H1, H2, H3	Cooper	84
	ABB	84
	Siemens	84
	GE	88

5.9.2 The manufacturer shall provide mounting for the arresters. The contractor shall minimize the distance between the surge arrester and the bushing.

5.9.3 The manufacturer shall provide a surge arrester ground pad for each arrester consisting of a tank grounding pad as specified in ANSI/IEEE C57.12.10. The grounding pad shall be mounted on the side of the tank as close as possible to the arrester.

5.9.4 All surge arresters shall be manufactured and tested in accordance with ANSI/IEEE C62.11.

5.9.5 If manufacturer determines corona rings are necessary, the surge arresters shall be equipped with corona rings.

5.10 De-energized Tap Changer

The transformer shall be provided with full capacity high voltage de-energized taps of:

131,100; 134,500; 138,000; 141,450; 144,900 Volts
65,550; 67,275; 69,000; 70,725; 72,450 Volts

5.10.1 Operation of the de-energized tap changer from ground level is required. The de-energized tap changer position indicator shall be visible from ground level.

5.10.2 Provisions for padlocking shall be furnished for each de-energized tap position.

5.10.3 The de-energized tap changer shall be arranged to provide for inspection and maintenance without untanking.

5.10.4 The de-energized tap changer shall not require periodic movement during the life of the transformer for preventive maintenance purposes. The contacts of the switch shall be silver plated.

5.10.5 The series/parallel switch shall not require periodic movement of the switch for preventive maintenance purposes.

5.11 On Load Tap Changer (OLTC)

5.11.1 The transformer shall be equipped with an automatic OLTC meeting the following requirements:

a. The OLTC equipment shall be the Reinhausen RMV-II with the MD-III motor drive / control cabinet with a VIM Monitoring System Model “B” Version . The OLTC cabinet shall include the accessories required to provide digital remote tap position information to SCADA via DNP 3.0 protocol. The remote tap position signal shall be accessible to AE in the main control cabinet.

b. A Beckwith M2001D regulating relay complete with the Beckwith M-2270B adapter panel shall be included in the main control cabinet with the following provisions.

   a. The M-2270B shall have the following options

      i. SCAMP (SCADA controllable Auto/Manual Pushbutton) switch. Requires M-2001 Series Control with firmware version D-0146V08.05.015 or later.

      ii. SCADA Cutout Switch (local/remote) Blocks SCADA “write” commands.

   b. The Beckwith relay shall have provisions for RAISE and LOWER operations.

   c. These provisions shall not interfere with similar provisions for operation of the OLTC in the OLTC cabinet.

c. The OLTC and all associated windings shall be capable of operating at the maximum transformer rating (70 MVA) continuously.

d. The contractor shall provide a separate complete nameplate for the OLTC.

e. The regulating winding shall be fully distributed.

5.11.2 Provisions shall be provided for thirty-two (32) steps. All tap positions shall be full capacity. Each step will correspond to a change in voltage of 5/8 percent of center tap voltage (35 kV).

5.11.3 The transformer and the on load tap changer shall be designed to operate in a step-down mode. The primary purpose of the OLTC will be to keep the secondary voltage constant should the load on the 35 kV distribution system and/or the 138 kV system voltage vary.

5.11.4 The contractor shall locate the OLTC as per the requirements outlined in the preceding two paragraphs.

a The Offeror shall provide with the Offer submittal the location of the on load tap changer and a description of how it satisfies the requirements of the specification.

b The proposed control scheme to accomplish the primary mode of operation must be included in the Offer submittal.

5.11.5 The OLTC shall be accessible from ground level.

5.11.6 A table of voltages and currents for each OLTC position at the 65° C maximum nameplate rating at all tap voltages shall be provided on the nameplate.

5.11.7 The on load tap changer motor shall be mounted in the OLTC control cabinet and it shall be readily accessible with the transformer energized. The motor shall be equipped with overcurrent protection with a manual reset.

5.11.8 Provisions shall be made for the operation of the OLTC in the OLTC cabinet.

a Local or Remote operation

.i While in the REMOTE position, the transformer tap position may also be changed upon receipt of a signal from the AE's remote supervisory equipment or may be operated from the BECKWITH AVR unit. The contractor shall provide all the equipment in the transformer necessary to effect these operations. Each signal shall result in one tap position change.

.ii The LOCAL position shall allow operation from the OLTC cabinet only and disable operation from the main control cabinet or from AE's remote supervisory equipment.

b Raise or Lower switch with provisions for OFF. This shall only be allowed in the LOCAL position.

c The provisions above shall work in conjunction with the operation with controls of the OLTC in the main cabinet and included in the Beckwith relay.

5.11.9 Auxiliary contacts shall be provided for "on-tap/off-tap" status indication on remote equipment.

5.11.10 The manufacturer shall wire all equipment control wiring to a terminal strip in the control cabinet. AE will connect wiring for "Raise," "Lower," "Auto," and "Remote" to this terminal strip.

5.11.11 Auxiliary contacts shall be provided for "OLTC Upper Limit Over Travel" and "OLTC Lower Limit Over Travel" alarms to the Annunciator described in section 5.14.12.

5.11.12 The manufacturer shall provide one (1) counter to count all OLTC operations.

5.11.13 The following electrical accessories shall be provided in the OLTC control cabinet: one (1) thermostatically controlled heater to prevent condensation; one (1) 120 V, 100 W equivalent, mechanically protected fluorescent outdoor light equipped with an outdoor fixture and outdoor door-operated switch; and one (1) 120 V, 20 Amp, outlet equipped with a Ground Fault Interrupting Device (GFCI). Each accessory shall be supplied from a separately protected circuit.

5.11.14 A mechanical position indicator with maximum and minimum indicating hands shall be provided. The position indicator shall be visible through a window in the door of the OLTC control cabinet and shall also be visible from the manual control panel. The

manufacturer shall provide a push button to reset the maximum and minimum indicating hands. The push button shall be located in the OLTC control cabinet.

5.11.15 The OLTC contacts shall be guaranteed for a minimum of 500,000 operations at full load before OLTC contact maintenance is required, regardless of rated through current. The OLTC shall be designed to achieve the full 500,000 operations on any combination of adjacent taps.

a The Offeror shall provide verification with the Offer that the selected OLTC meets the requirements contained in this section. The verification shall include, but not be limited to, the minimum number of operations before the mechanism and contacts require maintenance and the calculations used to arrive at this number.

5.11.16 The manufacturer shall provide one (1) combination 2" drain and sampling valve located at the bottom of the OLTC compartment. The sampling device shall be suitable for use with ¼" I.D. Tygon tube for taking oil samples. The valves supplied shall be Milwaukee Valve Company #506-202 or AE engineer approved equivalent.

5.11.17 The manufacturer shall provide electrically interlocked hand crank for manual operation of the OLTC.

5.11.18 The manufacturer shall provide limit switches and mechanical stops to prevent over-travel of the drive mechanism.

5.11.19 The manufacturer shall provide one (1) rapid pressure rise sensing unit mounted on the OLTC compartment. The unit shall be equipped with test plugs to simulate a rapid pressure rise so that the unit can be tested periodically. All wiring external to the control cabinets shall be run in rigid metallic galvanized conduit or AE engineer approved equivalent.

a The rapid pressure rise sensing unit shall be a Qualitrol Series 910 Rapid Pressure Rise Relay complete with CON-603 series connector and Standard (not ANSI) wiring diagram.

b The RPRR unit shall be mounted on a 2” gate type valve which is mounted on the transformer tank. The valves supplied shall be Milwaukee Valve Company #505-001 or AE engineer approved equivalent

c Circuitry from this device shall be connected to a seal-in relay. This seal-in relay shall be equipped with reset button, indicating light, trip (63X) and alarm contacts and shall be mounted in the main control cabinet. The seal-in relay shall be a Qualitrol Series 909-300-01 Seal-In Relay

d Indicating light shall indicate RPRR - OLTC (Rapid Pressure Rise Relay - OLTC) trip and shall remain lit until the rapid pressure rise relay has been manually reset.

e All circuitry and relays associated with the rapid pressure rise relay scheme for the OLTC shall be independent from the rapid pressure rise relay scheme for the main tank.

5.11.20 The manufacturer shall provide one (1) automatic pressure relief device, which can be reset manually, mounted on each OLTC compartment. All wiring external to the control cabinets shall be run in rigid metallic galvanized conduit or AE engineer approved equivalent. Circuitry from this device shall be routed to the main control cabinet where alarm contacts and a local trip flag shall be provided.

a The automatic pressure relief device shall be a Qualitrol Series 208 Pressure Relief Device, complete with CON-603 series connector and Standard (not ANSI) wiring diagram, and #415-P73 switch.

5.11.21 The manufacturer shall provide one (1) magnetic liquid level gauge with low liquid level alarm contacts for the OLTC.

a The manufacturer shall set the contacts of the alarm to operate when the oil level drops below normal operating level.

b The liquid level gauge shall have a six (6) inch dial.

c The magnetic liquid level gauge shall be a Qualitrol Series 032 Magnetic Liquid Level Gauge, complete with CON-603 series connector and Standard (not ANSI) wiring diagram. Part # CAS-747-1.

5.11.22 The manufacturer shall provide terminal board points for PT terminations in the OLTC cabinet.

5.11.23 The manufacturer shall provide a ventilated weatherproof control cabinet with hinged doors equipped with wind latches. The doors shall provide access to the control devices and have provisions for padlocking. All cabinet and door hardware shall be non-rust stainless steel.

5.11.24 A line-drop compensator (LDC) current transformer shall be provided on the X2 bushing.

5.12 The windings of either the series transformer, or the preventive auto-transformer, shall be the same type as the main windings. The manufacturer shall use the same winding construction methods on all windings in the transformer including the series transformer, and the preventive auto-transformer.

5.13 All exposed rotating drive shafts and related components shall be protected from accidental contact with steel covers. The steel covers shall be of sufficient rigidity and supported to prevent deformation.

5.14 **Indicating Devices**

Dial type indication gauges shall be removable, have detachable covers with glass faces, and shall be water resistant. All gauges shall be readable from the ground. That is, the gauges shall be readable by a six (6) foot tall person standing four (4) feet from the base of the transformer. The manufacturer shall tilt the gauges to allow this, if necessary. Each terminal of every switch shall be wired separately to a terminal strip in the main control cabinet. The following indicating devices shall be included:

5.14.1 One (1) magnetic liquid level gauge with low liquid level alarm contacts for the expansion tank. The contacts shall be set by the manufacturer to alarm when the oil level drops below normal operating level. The liquid level gauge shall have a six (6) inch dial. The magnetic liquid level gauge shall be a Qualitrol Series 032 Magnetic Liquid Level Gauge, complete with CON-603 series connector and Standard (not ANSI) wiring diagram. Part Number: 032-018-01

5.14.2 One (1) dial type liquid temperature thermometer shall be mounted at eye level. The thermometer shall be furnished with a maximum temperature indicator needle, which can be read and reset manually through the face from ground level, and with alarm contacts wired to the main control cabinet. The thermometer shall be mounted in a thermometer well as shown in Figure 3 of ANSI/IEEE C57.12.00. The liquid thermometer shall be located adjacent to the winding temperature indicator. The liquid temperature indicator shall have a six (6) inch dial. The liquid temperature thermometer shall be a Qualitrol Series 104 Remote Thermometer Controller. Part Number: 104-321-02

5.14.3 One (1) dial type hot spot temperature indicator mounted at eye level with thermal load indicating dials and contacts for control of forced cooling equipment shall be provided. This indicator shall be furnished with maximum temperature indicators that can be reset manually through the face at ground level. The words “Winding Temperature” shall be on the dial or on a suitable nameplate adjacent to it. The hot spot temperature indicator shall have a six (6) inch dial. The hot spot temperature thermometer shall be a Qualitrol Series 104 Remote Thermometer Controller. Part Number: 104-321-02

5.14.4 Two (2) rapid pressure rise (RPR) sensing units shall be supplied and mounted on diagonal corners of the main transformer tank. The RPR devices shall be accessible from the ground level

a The rapid pressure rise sensing unit shall be a Qualitrol Series 900 Rapid Pressure Rise Relay, complete with CON-603 series connector and Standard (not ANSI) wiring diagram.

b The RPRR unit shall be mounted on a 2” gate type valve which is mounted on the transformer tank. . The valves supplied shall be Milwaukee Valve Company #505-001 or AE engineer approved equivalent.

c Each unit shall be equipped with test plugs to simulate a rapid pressure rise so that the unit can be tested periodically.

d Circuitry from both of these devices shall be provided to a seal-in relay. The seal-in relay shall be a Qualitrol Series 909-300-01 Seal-In Relay.

e This seal-in relay shall be equipped with reset button, indicating light, trip (63X) and alarm contacts and shall be mounted in the main control cabinet.

f Indicating light shall indicate RPRR - Main Tank (Rapid Pressure Rise Relay - Main Tank) trip and shall remain lit until the rapid pressure rise relay has been manually reset.

g All circuitry and relays associated with the rapid pressure rise relay scheme for the main tank shall be independent from the rapid pressure rise relay scheme for the OLTC.

h All wiring external to the control cabinets shall be run in rigid metallic galvanized conduit or AE engineer approved equivalent.

5.14.7 One (1) cover mounted automatic pressure relief device (PRD) for each 10,000 gallons of oil, which can be reset manually. Circuitry from these devices shall be routed to the main control cabinet where alarm contacts and a local trip flag shall be provided. The pressure relief devices shall be located such as to provide equal coverage on the cover.

a The automatic pressure relief device shall be a Qualitrol Series 208 Pressure Relief Device, complete with CON-603 series connector and Standard (not ANSI) wiring diagram, and #415-P73 switch.

b Part Number: 208-60Z (CS11471)

5.14.8 The manufacturer shall provide two (2) 2" combination upper filter and sampling valves at the top of the transformer. These valves shall be located on opposite ends on the short sides of the transformer, below the 25°C oil level, suitable for the return of filtered oil.

5.14.9 The manufacturer shall also provide two (2) 2" combination drain and sampling valves at the bottom of the transformer. These valves shall be located on opposite ends on the short sides of the transformer.

5.14.10 All four combination filter/drain and sampling valves shall be of the gate type brass valves and shall be located where there are no obstructions within 24" of the valve vicinity.

a The valves supplied shall be Milwaukee Valve Company #506-202 or AE engineer approved equivalent.

b The valves shall have 2" NPT with a threaded pipe plug on the open end. The valves shall have a built-in sampling device, which shall be located in the side of the valve between the main valve seat and the pipe plug. The sampling device shall be supplied with a 5/16" 32 threads per inch male connector

equipped with a gasketed screw-on cap. The sampling device shall be suitable for use with ¼" I.D. Tygon tube for taking oil samples.

5.14.11 The manufacturer shall provide one Qualitrol Thermal Plate #2WTL-1027-1 mounted on the tank wall above the control cabinet.

5.14.12 One (1), twelve-point 125 V DC SEEKIRK Annunciator, similar to Type B1003S43 except with one (1) output alarm contact per point, shall be mounted and wired in the control cabinet with AE access to the output alarms. The Annunciator shall be equipped with plug-in modules (soldered modules not allowed). As a minimum, the following alarms shall be provided:

a. Sudden Pressure Trip (63X-1,2 Tank & 63X-3 OLTC)

b. Pressure Relief (63P-1 Tank & 63P-2 OLTC)

c. High Winding Temperature (49T) *manufacturer to insert alarm temp here

d. High Liquid Temperature (26Q) *manufacturer to insert alarm temp here

e. Low Liquid Level (71Q- 1 OLTC, 71Q-2 Tank)

f. OLTC Upper /Lower Limit

g. OLTC Vacuum Bottle Lockout (86X)

h. Regulating Relay Alarm (90)

i. Main AC Failure (27-1)

j. Fan AC Failure (27-2, 27-3)

k. OLTC AC Failure (27-4)

l. Nitrogen High/Low Pressure

5.14.13 All indicating devices mentioned in section 5.14.12 shall have their alarm and trip contacts wired to a terminal strip in the control cabinet. Connection of the indicating devices to the annunciator shall be from this terminal strip. Separate points for each sudden pressure relay alarm on the annunciators shall be provided. All alarm and relay contacts shall be rated for use at 250 volts DC.

5.14.14 The manufacturer shall provide one Schweitzer SEL 2600A00 RTD module to accept inputs from 100Ω Platinum RTDs mounted in the Qualitrol Thermal plate described in item 5.14.11.

5.14.15 All wiring external to the control cabinets shall be run in rigid metallic galvanized conduit or AE engineer approved equivalent.

5.15 Cooling Equipment

5.15.1 Removable radiators with top and bottom shutoff valves shall be provided. The radiators shall be hot dipped galvanized.

5.15.2 The control of the oil cooling devices shall be actuated by winding temperatures and shall progress in accordance with the provisions for two stage cooling as described in ANSI/IEEE C57.12.10. The manufacturer shall determine and set the exact values at which each cooling step takes place. These points, including that of the high temperature alarm, shall be marked on the face of the winding temperature device. In addition, a nameplate readable from ground level shall be provided to indicate the temperature values at which each event occurs.

5.15.3 In addition to normally provided controls, each set of cooling equipment shall be provided with an automatic/manual selector switch to permit operation of all cooling equipment simultaneously for test purposes. Automatic controls shall also be

provided to equalize operating time on all fans. That is, each set of cooling equipment shall alternately be started.

5.15.4 All fan motors shall be 240 VAC, single phase and be equipped with sealed ball bearings and an individual thermal protective device equipped with automatic reset. Fan motors shall be arranged with suitable wiring connectors such that if defective they may be removed for maintenance without taking the transformer out of service. Fan motors shall be UL or CSA recognized. All fans shall be provided with blade guards that meet OSHA requirements.

5.16 Oil Preservation System

The oil preservation system shall be a nitrogen gas pressure system. The system shall be complete with low and high pressure alarms and all associated controls, mounted in a weatherproof compartment mounted on the side of the transformer. The bottom of the nitrogen bottle shall be no higher than 6 inches above the transformer. Alarm contacts shall be provided with leads wired to the annunciator (see 5.14.12). All door hardware and mounting hardware shall be non-rust stainless steel.

5.17 Control Cabinets

5.17.1 All current transformer (CT) circuits, alarm circuits, potential circuits, and other circuits shall be housed in a single weatherproof cabinet.

5.17.2 Current transformer circuits shall be wired to terminal strips equipped with shorting bars (General Electric Type EB-27 or AE engineer approved equivalent). All CT wiring shall be No. 10 AWG copper wire, 600 Volt insulation, NEC THW rated.

5.17.3 The control cabinet shall be accessible from ground level. The bottom of the cabinet shall be a minimum of 18 inches above the base. All cabinet and door hardware shall be non-rust stainless steel.

5.17.4 The control cabinet shall accommodate an uncut, non-magnetic bottom entrance plate large enough to handle four (4) two (2) inch rigid conduits on 3 3/8” centers. A clear path shall be provided between the conduit entrance and all terminal boards. The manufacturer shall not use any portion of this plate for wiring installed at the factory.

5.17.5 The following electrical accessories shall be provided in the main control cabinet: one (1) thermostatically controlled heater to prevent condensation; one (1) 120 V, 100 W equivalent, mechanically protected fluorescent outdoor light equipped with an outdoor fixture and outdoor door-operated switch; and one (1) 120 V, 20 Amp, dual receptacle outlet equipped with a Ground Fault Interrupting Device (GFCI). The receptacle outlet shall be accessible from the outside of the control cabinet without having to open any control cabinet doors. Each accessory shall be supplied from a separately protected circuit.

5.17.6 All transformer auxiliary wiring shall be a minimum of No. 12 AWG copper wire, 600V insulation, NEC THW rated. The auxiliary wiring shall be captivity identified at both ends and routed to the control cabinet in galvanized conduit and fittings.

5.17.7 All wiring shall be flame resistant, oil resistant, heat resistant, and moisture resistant. All wiring shall be complete and performed in a professional, workmanlike manner and bundled or contained.

5.17.8 Splices in wiring will not be allowed.

5.17.9 Each end of all conductors shall be permanently tagged and identified. The method of permanently tagging the conductor ends shall be approved by the AE engineer. Wire ends shall be permanently fitted with compression type, ring lugs before attaching securely to terminal studs.

5.17.10 The manufacturer shall design the layout of the electrical wiring in the control cabinet to segregate the manufacturer's wiring from the AE's wiring. Terminal boards shall be wired with one side reserved for the manufacturer and one side reserved for the AE. Factory wiring shall not be terminated on the side of the terminal boards reserved for AE use.

5.17.11 Terminal boards for control wiring shall be solid molded blocks, rated 600 Volts and a minimum of 30 Amperes per terminal and able to accommodate wire sizes up to and including #10 AWG wire size.

5.17.12 All control wiring shall be wired to #10-32 barrier type terminal strips properly sized to handle the loads (General Electric Type EB-25 or AE engineer approved equivalent). Terminal board covers are not desired. However, a white marking strip shall be furnished, marked, and attached so that terminal points can be identified. Terminal board points for terminating transformer AC supply for fans, pumps, OLTC drive, etc. shall accept #6 AWG and shall be rated for a minimum of 50 Amps. The use of "plug-in" terminal boards are not allowed.

5.17.13 All devices in control cabinet shall be permanently identified and marked with appropriate reference designator as shown on the manufacturer supplied schematic and wiring diagrams.

5.17.14 All control cabinet doors shall be supplied with wind latches. If multiple doors are used in the control cabinet, the wind latches of the inner door shall attach to the outer door.

5.17.15 The control cabinet shall be equipped with a weatherproof pocket mounted on the inside of the control cabinet door. The weatherproof pocket shall be of sufficient size to accommodate the instruction book and all drawings. The weather pocket shall have a hinged top cover to facilitate retrieval of the instruction book and drawings. The weatherproof pocket shall not interfere with the operation of the relays inside the control cabinet with the door closed. Sufficient clearance shall be maintained between the weatherproof pocket and the devices inside the control cabinet with the doors in the closed position.

5.17.16 The control cabinet shall be equipped with a drip shield to prevent rainwater from dripping into the control cabinet with the doors in the open position.

5.18 Auxiliary and Control Power

5.18.1 AE will provide the 125 V DC, 2 wire and 120/240 V AC, 1 phase, 3 wire power sources necessary to operate the on load tap changer, cooling equipment, and control circuits.

5.18.2 The sudden pressure relays, alarm circuits, and other DC control equipment shall operate from 125 V DC.

5.18.3 Single phase 120/240 V AC and 125 V DC loads shall be supplied by molded-case circuit breakers properly sized for the loads. Molded-case circuit breakers shall be dual-rated at 240 V AC/250 V DC. Molded case circuit breakers with 50°C ambient temperature rating are to be used exclusively**. Knife switches and fuses are not allowed.** The manufacturer shall provide a main 120/240 Volt AC power panel and a main 125 V DC power panel. Each power panel shall be properly identified. All circuit breakers shall have an interrupting rating of 10 kA.

5.18.4 An AC failure relay and alarm shall be provided for the single phase 120/240 V AC circuits. The alarm shall have an adjustable time delay of up to 5 minutes. The contacts shall be wired to terminal blocks for AE use and to the annunciator.

5.18.5 DC failure relays and alarms shall be provided for each 125 V DC circuit. The contacts shall be wired to terminal blocks for AE use. The DC failure alarm shall monitor the incoming DC service.

5.19 Grounding

5.19.1 The manufacturer shall install external core ground test points from each individual core section to an external core ground bushing located on the top or side of the transformer. This applies to all transformers in the tank including booster transformers, preventative autotransformers, or any other transformer. These bushings shall be capable of withstanding 1500 volts D.C. The core ground bushings shall be protected with a weatherproof enclosure. Removable ground links shall be provided to ground the core ground bushing to an adjacent ground point within the enclosure. A separate accessible ground shall be brought out for the core framers in the same enclosure as the core ground.

5.19.2 A minimum of four (4) two-hole NEMA copper faced steel ground pads shall be provided. Each pad shall have two (2) holes horizontally spaced on 1 ¾ inch centers and drilled and tapped for ½ - 13 UNC thread to minimum depth of ½ inch. The pads shall be welded to the base of the main tank on all four corners.

5.19.3 The manufacturer shall provide one (1) two-hole NEMA copper faced steel pad mounted internally to the LV throat housing and one (1) two- hole NEMA copper faced steel pad mounted externally over the internally mounted pad. These pads will be used to make the transition from the X0 bushing to the outside of the LV throat.

5.19.4 A path on the HV side of the transformer shall be delineated for grounding the X0 bushing, core ground bushing, and surge arresters. This path shall be from one ground pad at the base of the transformer, up one side, across the HV side of the transformer at the top and down the opposite side of the transformer to the other grounding pad at the base of the transformer. It shall consist of one (1) hole NEMA copper faced steel pads, drilled and tapped for ½-13 UNC thread to a minimum depth of ½ inch, spaced not more than five (5) foot intervals. See Attachment V, AE Drawing No. 7D 3011 for further clarifications.

5.19.5 All grounding jumpers shall be bare copper, Class AA strands or equivalent. Insulated conductor shall not be used in weather exposed area as grounding jumpers.

5.20 Handling

Lifting, moving, and jacking facilities shall be provided. The jacking/lifting lugs shall be suitable for use with 17 inch high jacks. Lifting eyes shall be provided on all covers, as well as, on the tank. Pulling eyes shall be provided for the attachment of a pulling rig for movement of the transformer along the direction of either centerline. Jacking lugs and lifting eyes shall be provided with identifying tags.

5.21 Vacuum Filling

The transformer tank, OLTC compartments, and radiators shall be capable of withstanding full vacuum.

5.22 Paint Requirements

5.22.1 The transformer and control cabinets shall be painted inside and outside. Interior of tank and tank cover shall be painted white. The interior of the control cabinets shall be painted white.

5.22.2 The finish coat shall be ANSI No. 70 light gray, except as noted in Section 5.22.3.

5.22.3 The interior of the transformer tank, the core frames, and the interior of the control cabinets shall be finished with a Federal Std. No. 595-B White No. 7875 paint or equivalent color.

5.22.4 The total finish on non-weather exposed surfaces shall be at least three (3) mils in thickness.

5.22.5 The manufacturer shall provide a skid resistant finish on the top of the transformer.

5.22.6 All primer and paint shall be lead free.

5.22.7 The manufacturer shall provide a separate non-prorated warranty on the finish for a five (5) year period. The warranty shall cover rust, rust bleed-through, flakes, paint fading, and paint chipping. The manufacturer is responsible for paint touch-up during and immediately after the installation is complete. The manufacturer shall supply six (6) spray cans of touchup paint for each transformer.

5.23 Insulating Oil

5.23.1 The manufacturer shall be responsible for vacuum processing and filling the transformer. The manufacturer shall furnish sufficient transformer insulating oil in clean tank trucks with sealed pumps and hoses to the job site. The manufacturer shall give AE five (5) days notice of intent to deliver the oil so that personnel will be available at the job site to inspect the delivery. The tank trucks shall be certified clean and dry.

5.23.2 The oil shall conform to the latest revision of ANSI/ASTM D3487, Type II.

5.23.3 The manufacturer shall supply the following information for the oil used in the transformer during dielectric testing:

a. Power factor at 25° C and 100° C

b. Water content in ppm

c. Dielectric when tested in accordance with ASTM D1816 using a 40 mil gap

d. Interfacial tension

e. Color

f. Gassing coefficient, ASTM D2300-1985 (Reapproved 1991)

g. Neutralization number

h. Inhibitor

i. PCB content

5.23.4 The manufacturer shall specify their minimum characteristics for the oil to be used in their factory and at the installation site. The characteristics of the oil at the site shall not be less than that required at the factory for testing.

5.23.5 The transformer shall have a decal noting that the oil in the transformer when filled at the site is “PCB FREE."

5.23.6 Online Dissolved Gas Analyzer Option

If an Online Dissolved Gas Analyzer is specified on a Purchase Order, the manufacturer shall install and connect one (1) 8 Gas Online Dissolved Gas Analyzer of the model specified. The analyzer shall include the following:

a. Front panel display

b. Hardened communication electronics

c. DNP3, Modbus and IEC 61850 protocols

d. RS232, RS485, Ethernet Fiber (100BaseFX) communication interfaces

e. Tank mounted with mounting location that minimizes length of oil tubing.

The approved models are:

a. Serveron

b. Morgan Shaeffer

5.24 Nameplate Requirements

5.24.1 The manufacturer shall supply all nameplates as specified in the ANSI/IEEE standards. All nameplates shall be made from non-rust stainless steel. The information contained on the nameplates shall be inscribed and painted black. All the information shall be in English and in standard non-metric units of measure.

5.24.2 The manufacturer shall indicate the total weight of cellulose insulation contained in the transformer on the main nameplate.

5.24.3 The transformer shall also be provided with an additional nameplate mounted on the control cabinet door that includes the AE Purchase Order (P. O.) Number. This additional nameplate shall have additional blank space of approximately 5”H x 8”W in size to accommodate AE’s System Unique Number (SUN) and the Bar Code of the SUN.

6. INSPECTION and TEST REQUIREMENTS

6.1 AE reserves the right to visit the manufacturing facility and to observe the transformer while undergoing construction and testing. The manufacturer may not charge AE for its right to visit the facility during construction and testing. AE shall be notified at least three weeks (3) prior to the implementation of the required tests. If three (3) weeks notice is not given before the start of testing, AE reserves the right to have the manufacturer delay the testing until the first time in which the AE inspector(s) assigned to this purchase are available. Furthermore, if the AE inspector(s) arrives on site and the transformer is not ready for testing within eight (8) hours, AE reserves the right to postpone the testing for up to three (3) weeks and the manufacturer shall reimburse the AE for any travel and labor cost incurred by AE due to manufacturer’s delays.

6.2 Delays caused by AE exercising its rights as per the above paragraph shall not relieve the manufacturer from meeting the required delivery dates.

6.3 Routine Tests

All routine tests listed in Section 8.2.1 of ANSI/IEEE C57.12.00 shall be performed on the transformer in accordance with ANSI/IEEE C57.12.90.

6.4 Additional Tests

In addition to the routine tests described in ANSI/IEEE C57.12.00, the following tests shall be made on each transformer. Unless specified otherwise, all tests shall be performed in accordance with ANSI/IEEE C57.12.90. Failure to meet any specified parameter may be the basis for rejection of the transformer. If a problem occurs during any dielectric test, which results in the lowering of the oil and repairs below the top of the core and coil assembly, all dielectric tests completed up to that point shall be repeated. All testing shall be performed with the transformer fully assembled. The bushings, oil preservation system, and heat exchangers that shall be installed on the transformer and shall be used during all the testing

6.5 The following test sequence shall be used unless otherwise agreed upon:

6.5.1 Routine Tests

6.5.2 Insulation Power Factor Tests

6.5.3 Load Loss Measurements

6.5.4 No-Load Loss and Excitation Current Measurements

6.5.5 Excitation Test-(may be moved to accommodate travel schedule)

6.5.6 Temperature Rise Test on Base Rating-(may be moved to accommodate travel

6.5.7 Temperature Rise Test on Maximum Rating-(may be moved to accommodate travel schedule)

6.5.8 Lightning Impulse Tests

6.5.9 Applied Voltage Tests

6.5.10 No-Load Loss and Excitation Current Tests (No-Load Loss Guarantee Value Established Here)

6.5.11 Noise Test

6.5.12 Induced Test - The induced test with partial discharge measurement shall be made last.

6.5.13 Auxiliary controls Test.-Including but no limited to:

a. LTC controls-Manual and AVR

b. Temperature Controls-Manual and through gauges

c. Alarms

d. SPR Trips and Alarms

6.6 Insulation power factor tests shall be performed prior to any power frequency voltage is applied to the transformer. The testing shall be in accordance with ANSI/IEEE C57.12.90. The maximum acceptable power factor is 0.5% when corrected to 20° C.

6.7 Load Losses and Impedance

6.7.1 Measure the load losses and impedance's (HV – 138 kV connection to LV and HV – 69 kV connection to LV) at the following OLTC positions; Neutral, 1R, 16R, and 16L, on the self cooled ratings

6.7.2 The method for measuring the load losses must be specified in the Offer. Only methods that have sufficient accuracy for measuring losses at low power factor are acceptable. See Section 4.4.2.

6.8 No-Load Loss and Excitation Current Tests

a. Measure no-load losses and exciting current at 90%, 100%, 110% voltage before and after the impulse tests. The values measured after the impulse tests will be used for guarantee purposes. The no-load losses and exciting current shall be measured at OLTC positions 16L, neutral, 1R, 16R, and no-load loss guarantee position, if different from 1R.

b. If the transformer has an OLTC, which uses variable volts per turn design, the no-load losses and exciting current shall be measured and guaranteed on the OLTC position having the highest no-load losses.

6.9 110% Excitation Test

6.9.1 The manufacturer shall perform a 24 hour excitation test at 110% voltage. Hourly measurement and recording of no-load losses and excitation currents shall be made and recorded.

a. Oil samples shall be taken for gas in oil analysis immediately before and after the excitation test. In addition, an oil sample shall be taken for gas in oil analysis a minimum of eight (8) hours after the completion of the excitation test. Oil samples shall be taken in accordance with the requirements of ASTM D3613 and tested in accordance with the requirements of ASTM D3612.

b. The measured gas levels shall be corrected to an equivalent 10,000 gallon oil level before comparison. The equivalent gas level will equal the measured gas level (ppm) multiplied by 10,000 gallons divided by the oil volume of the

transformer in gallons. This correction does not apply to acetylene. The maximum increases in the gas levels based on the 10,000 gallon level are as shown:

i.	Ethylene	0 ppm
ii.	Methane	1 ppm
iii.	Ethane	1 ppm
iv.	Acetylene	less than 1 ppm (correction factor not applicable)
v.	Hydrogen	5 ppm
vi.	Carbon Monoxide	5 ppm

6.9.2 The gas in oil analysis from the two (2) samples taken after the completion of the excitation tests shall be compared to the gas in oil analysis from the pretest sample. If the gases have increased by more than the limits outlined above, AE shall be contacted and a course of action determined. In general, it is expected that the manufacturer shall locate and correct any problem that results in gas values above these limits.

6.10 Temperature Rise Tests

6.10.1 Temperature rise tests made at the self cooled and maximum forced cooled ratings are required on all transformers. Temperature test data on duplicate transformers is not acceptable to fulfill this requirement.

6.10.2 The manufacturer shall measure and report both the top and bottom oil rises, cooler inlet and outlet temperature rises, and the hot spot temperatures on locations determined during design review for both the OA and the maximum forced cooled ratings.

6.10.3 The oil temperature rise and winding temperature rise tests shall be performed on the tap position that results in the maximum rises.

6.10.4 Winding resistance measurements from shut down shall be plotted and shall be used as the basis for the determination of winding time constant. The raw data, cooling curves, and other required measurements shall be included in the test report.

6.10.5 Oil samples shall be taken for gas in oil analysis immediately before and after the temperature tests. In addition, an oil sample shall be taken for gas in oil analysis a minimum of eight (8) hours after the completion of the temperature tests.

6.10.6 Oil samples shall be taken in accordance with the requirements of ASTM D3613 and tested in accordance with the requirements of ASTM D3612.

6.10.7 The measured gas levels shall be corrected to an equivalent 10,000-gallon oil level before comparison. The equivalent gas level will equal the measured gas level (ppm) multiplied by 10,000 gallons divided by the oil volume of the transformer in gallons. This correction does not apply to acetylene. The maximum increases in the gas levels based on the 10,000 gallon level are as shown:

a.	Hydrogen	15 ppm
b.	Ethylene	1 ppm
c.	Methane	2 ppm
d.	Ethane	2 ppm
e.	Acetylene	less than 1 ppm (correction factor not applicable)
f.	Carbon Monoxide	20 ppm

g. Carbon Dioxide 150 ppm

6.10.8 The gas in oil analysis from the two (2) samples taken after the completion of the temperature tests shall be compared to the gas in oil analysis from the pretest sample. If the gases have increased by more than the limits outlined above, the AE shall be contacted and a course of action determined. In general, it is expected that the manufacturer shall locate and correct any problem that results in gas values above these limits.

6.10.9 The manufacturer shall measure top and bottom oil temperatures with temperature sensors in the transformer oil. External temperature measurements on the surface of piping or the tank are not acceptable.

6.11 Lightning Impulse Tests

6.11.1 All winding and neutral terminals shall be tested in accordance with ANSI/IEEE impulse test standards for the BIL specified and in accordance with this specification.

6.11.2 The voltage and current traces for all impulse tests shall be recorded utilizing HIAS computerized registration system or equivalent.

6.11.3 Discrepancies or differences on impulse test oscillograms will not be allowed except those caused by integral protective devices as outlined in ANSI/IEEE C57.12.98 and ANSI/IEEE Std 4. If such discrepancies or differences exist due to circuitry or other problems on any phase, the problem shall be corrected and all tests shall be repeated on all phases already tested.

6.11.4 If there is a substantial time delay (30 minutes or greater) between the impulse tests on any terminal, then the impulse test sequence shall be restarted on that terminal from the beginning.

6.11.5 A series of full wave, and chopped wave impulse tests on terminals H1, H2, H3, X1, X2, X3, and X0 in accordance with ANSI/IEEE C57.12.90. Strict adherence to the order of the impulse tests is required. The test sequence to be used on H1, H2, H3, X1, X2, and X3 shall be as follows:

a. one (1) Reduced Full Wave

b. one (1) Full Wave

i. Compare 1st reduced wave to 1st full wave prior to first chop wave test

c. two (2) Chopped Waves

d. one (1) Full Wave

e. one (1) Reduced Wave

f. At the completion of each terminal test, the following analysis shall take place (both voltage and current waves shall be analyzed):

i. Compare 1st reduced to 2nd reduced wave

ii. Compare 1st full to 2nd full wave

g. The test sequence to be used on X0 shall be as follows:

i. one (1) Reduced Full Wave

ii. two (2) Full Waves

iii. one (1) Reduced Full Wave

6.12 Applied Voltage Test

The applied voltage test shall be made in accordance with the appropriate ANSI/IEEE standards and with the following test voltages:

HV	275 kV
LV	50 kV
Neutral	50 kV

6.13 Noise Test

Transformer sound measurements shall be made on each transformer in accordance with ANSI/IEEE C57.12.90.

6.14 Induced Voltage Tests with Partial Discharge Measurements

6.14.1 The low frequency induced voltage test with partial discharge measurements shall be made in accordance with ANSI/IEEE standards as specified for Class II transformers with the following modifications.

6.14.2 Apparent partial discharge shall be measured and reported both in terms of the RIV at one MHz, generated in accordance with ANSI C57.12.90, and in terms of pico-coulombs for wide band in accordance with ANSI/IEEE C57.113.

6.14.3 RIV shall not exceed 50 microvolts at 1.5 times the maximum system voltage specified by ANSI C84.1. The measured partial discharge shall not exceed 200 pico-Coulombs.

6.14.4 The partial discharge shall be measured and recorded at the 150% level as the voltage is being increased to the enhancement level of 173%. The measured partial discharge shall not exceed 300 pico-Coulombs at the enhancement level.

6.14.5 The partial discharge shall be measured and recorded at the enhancement level.

6.14.6 The first reading at 150% following the enhancement shall be taken five (5) minutes after the voltage reaches the 150% level and every five (5) minutes thereafter for one (1) hour.

6.14.7 The partial discharge level shall not exceed 50 microvolts or 200 pico-Coulombs during the hour. The partial discharge level shall not increase more than 30 microvolts or 150 pico-Coulombs during the hour using the value at 150% prior to the enhancement as the base reading. There shall be no continuous increase during the hour or during the last 20 minutes of the hour.

6.14.8 In the event that the 50 microvolts limit or the 200 pico-Coulombs limit, the 30 microvolts increase or the 150 pico-Coulombs increase, or the continuous increase requirement are exceeded, the cause shall be determined and corrected.

6.14.9 In the event that a deviation from the specification exists, AE, in conjunction with the manufacturer, will consider available options including extended testing. The final course of action must be acceptable to AE.

6.15 Other Tests

6.15.1 A turn's ratio test shall be performed on all tap positions. Turns ratio test results should not deviate more than one-half of one percent (0.5%) from the nameplate ratio.

6.15.2 Resistance tests shall be made on all taps. Winding temperature should be recorded at the time of the test. Winding resistance test results from the different phases shall compare within one percent (1%) of adjacent windings.

6.15.3 A Doble 10 kV Excitation test shall be performed on all tap positions.

6.16 Current Transformer Tests

6.16.1 The current transformers shall be tested in accordance with ANSI/IEEE C57.1311. The testing shall include, but not be limited to, the following:

a. Ratio and phase angle

b. Excitation

c. Polarity

d. Burden

e. Winding and lead resistance

f. Insulation resistance

6.17 Control and Power Wiring Tests

6.17.1 Low frequency withstand voltage tests shall be performed on all control and secondary wiring in accordance with Section 5.16 of ANSI/IEEE C37.09. All low voltage wiring, including control and indication wiring shall be given full functional tests. Tests shall be performed on the LTC controller to ensure proper operation. Quality control and assurance tests results shall be made available to the AE inspector upon request.

6.18 **Sweep Frequency Response Analysis Test (SFRA)**

6.18.1 The SFRA tests shall be performed on each transformer at the factory close to in-service configuration as possible and on site as-commissioned in accordance with IEEE C57.149 Guide. The test configuration and transformer state shall be clearly documented in the test report.

6.18.2 On-Load Tap Changer (OLTC) and De-Energized Tap Changer (DETC) Positions shall be as follows:

- DETC - Nominal
- OLTC - 16R

6.19 Special Test Requirements

6.18.1 There shall be no intentional delays in the entire dielectric test sequence. The lightning impulse tests, applied voltage tests, and induced voltage tests shall be carried out continuously with minimal delays to allow only for the test circuit setup.

6.18.2 The entire test sequence as listed in Section 6.5 shall be repeated if failure occurs at any time during the test sequence that requires untanking, repairs, and or rework of the active parts.

7 Test Reports

7.1 Three (3) sets of the certified test reports shall be provided for each transformer. The manufacturer shall also present evidence of quality control testing and proof that the transformer has passed these tests. AE shall approve the transformer quality control test results before the shipment of the transformer. All reports shall be in English and in standard non-metric units of measure.

7.2 The test reports shall be printed on 8 ½" x 11" size paper and shall be bound in a lightweight folder with the manufacturer and the serial number clearly printed on the cover.

7.3 As a minimum, the test reports shall include the following:

7.3.1 Copy of all impulse traces with a complete sequential listing of all impulses, including calibration shots and actual failure shots if any.

7.3.2 Schematic diagrams of the test circuit for all test performed and the instruments used in registering the test data.

7.3.3 Copy of the recorder chart for all temperature readings during temperature rise test and loss data during no-load loss and load loss measurements.

7.3.4 Photographic record of the manufacturing of the transformer. Digital photographs suitable for printing at 8 ½" x 11" (minimum of 3 mega pixels) shall be submitted. The AE Engineer shall approve the camera and associated equipment used to take the photographs. Digital images shall be submitted in JPEG format on Compact Disk-Recordable media. As a minimum, the following photographs shall be included:

a Photos of each winding type

b Photos of the core steel before installation of the windings

c Photos of the assembled unit before tanking, including photos of the completed lead structures, the LTC, and the DETC

d Photos of the assembled unit after tanking

7.3.5 Electronic results of the SFRA tests shall be provided for each transformer within one month of the commissioning date.

Specification E-1416

CITY OF AUSTIN ELECTRIC UTILITY DEPARTMENT

PURCHASE SPECIFICATION

FOR

TRANSFORMER BUSHINGS

DATE	PREPARED BY	ISSUANCE/REVISION	APPROVAL PROCESS SUPV. / MATERIALS SUPV.
04/26/2002	Greg Troxell	Revision	
08/30/2011	Homer Portillo	Revision	
04/15/2015	M. Vela de Casillas	Revision	Todd Clemson

REASON FOR REVISION	*AFFECTED PARAGRAPHS*
Prepare specification for bid solicitation	1, 2

This specification, until rescinded, shall apply to each future purchase and contract for the commodity described herein.
Retain for future reference.

CITY OF AUSTIN ELECTRIC UTILITY DEPARTMENT
PURCHASE SPECIFICATION
FOR
TRANSFORMER BUSHINGS

1 SCOPE

1.1 The City of Austin (COA) Electric Utility Department d/b/a Austin Energy sets forth this specification as the minimum requirements for bushings used on the Austin Energy (AE) transformers.

1.2 Any product submitted in response to this specification shall have been available for purchase for a minimum of five (5) years and manufactured by a manufacturer that has five (5) years of experience producing this type of bushing for the ANSI electric utility industry.

2 APPLICABLE STANDARDS

All bushings furnished to the AE shall be designed, manufactured, and tested in accordance with the latest, NEMA, ANSI/IEEE, ANSI, ASTM, NESC and NEC standards applicable to power transformer bushings. In case of conflict between any of the standards mentioned in this specification and the content of this document, Austin Energy's specification shall govern.

3 BUSHINGS TYPES AND APPLICATION

3.1 Capacitance Graded Bushings

3.1.1 All bushings unless otherwise specified, are capacitance graded type bushings.

3.2 Solid Bushings

3.2.1 Solid type bushings may be specified for some high temperature applications. They will be specified, when required, in the AE transformer specification or purchase requisition.

3.3 Capacitance Graded Bushings for High Current and Temperature Applications

3.3.1 Bushings specified for high current and temperature applications such as non-ventilated bus duct shall meet the following criteria:

a. Peak operating temperature of 125° C for up to four (4) hours.

b. Continuous operating temperature of 120° C.

c. The bushing including gaskets shall be able to withstand the above temperatures (Section 3.3.1, Section 3.3.2).

d. The bushing including gaskets shall be capable of going down to a temperature of -20° C without damage from gas bubbles or leaks, or up to a temperature of 120° C without excessive pressure.

4 CHARACTERISTICS OF CAPACITANCE GRADED BUSHINGS

4.1 Internal parts shall be cleaned such that there are no loose particles or contaminants on the interior of the bushing.

4.2 Paper and Oil Quality

4.2.1 The condenser shall be made from high quality electrical grade paper. Adhesive bonding of the paper is not acceptable.

4.2.2 The quality of the oil in the bushing shall have the following minimum characteristics:

a. Dielectric: 30 kV minimum per ASTM D-1816, 0.040 inch gap

b. Power Factor: 0.05% maximum at 20° C

c. Power Factor: 0.3% maximum at 100° C

d. Interfacial Tension: 40 dynes/cm minimum

e. Water Content: 5 ppm maximum

f. Gassing Coefficient: negative when tested in accordance with the latest ASTM D2300.

4.2.3 The edges of the conducting surface used for the capacitance layers shall be covered by paper and not come out into the oil or be affected by bushing operation. AE reserves the right to have tests performed to demonstrate the integrity of the conductive surface.

4.2.4 The moisture content of the paper shall be less than 0.50% by weight at 20° C. It shall be the responsibility of the Manufacturer to prove that the water content is less than 0.50%.

4.3 External porcelains shall be one piece or have bonded joints if multi-piece porcelains are used. The AE Engineer will review the bonding material and method of application for approval.

4.4 Porcelain is preferred for internal casings. Other materials such as cast epoxy may be used with the approval of the AE Engineer.

4.5 The bushing shall be provided with a sight glass to visually verify the proper oil level in the bushing.

4.6 The bushing shall be provided with a Power Factor Test Tap.

4.7 The maximum acceptable power factors for capacitance-graded bushings are as follows:

4.7.1 345 kV and above - 0.35% at 20° C

4.7.2 Below 345 kV - 0.40% at 20° C

a. The bushings shall have an oil preservation system that excludes oxygen and moisture from the interior of the bushing. The characteristics of the system shall be such that gas bubbles shall not be generated when the bushing goes through a temperature cycle from a maximum of 110° C to room temperature. The manufacturer may be asked to demonstrate this capability.

5 CHARACTERISTICS OF SOLID BUSHINGS

5.1 All current carrying parts shall be copper or copper alloy.

5.2 Internal parts shall be cleaned such that, there are no loose particles or contaminants on the interior of the bushing.

5.3 Bushings that require oil in the interior of the current carrying conductor and/or between the conductor and the porcelain for either cooling or dielectric purposes shall be provided with a method for checking the oil level. Pipe plugs 1/2" or larger diameter in the top plate are acceptable.

5.4 The complete bushing, including all gaskets shall be capable of continuous operation at 120° C.

5.5 The complete bushing including all gaskets shall be capable of operating at a peak temperature of 125° C for up to four (4) hours.

5.6 All load carrying external terminals shall be silver or tin plated.

6 DESIGN TESTS

Bushing design tests made in accordance with ANSI/IEEE standards shall be performed on all bushings furnished to the AE. These tests shall be performed on the exact bushing style being furnished. Data from similar styles is not acceptable. Certified reports for such tests shall be furnished. Failure to submit the proper data shall be basis for rejection of the bushing.

7 PRODUCTION TESTS ON EACH BUSHING

7.1 Capacitance Graded Bushings

The following tests shall be performed on each bushing:

7.1.1 Power Factor and Capacitance

a. The measured power factors and capacitances for C1 and C2, corrected to 20° C, shall be stamped on the nameplate.

7.1.2 60 Hertz Applied Tests with Partial Discharge Measurements.

a. Increase the voltage to the 1.5 times Maximum Line to Ground Voltage specified in the latest ANSI/IEEE C57.19.01 standard and measure the partial discharge. The maximum allowed value is 5 microvolts or 5 picocoulombs.

b. Increase the voltage to the withstand value specified in the latest ANSI/IEEE C 57.19.01 standard and measure the partial discharge. The partial discharge shall be 25 microvolts or 25 picocoulombs or less and shall not increase during 1 minute test.

c. Decrease the voltage to the 1.5 maximum voltage level and measure the partial discharge. The maximum allowed value is 5 microvolts or 5 picocoulombs and the value shall not be greater than the initial measurements at this voltage.

7.1.3 If the bushing does not pass these tests the first time, it shall not be reprocessed and retested more than one additional time. The AE Engineer will review the second test being conducted on the bushing for approval.

7.1.4 A certified test report for each bushing test shall be furnished to the AE Engineer.

7.2 Solid Bushings

7.2.3 A "hot collar" type power factor measurement for base line data shall be made on all bushings of this type.

7.2.4 The value measured from the "hot collar" test and the temperature at which the measurement was made shall be stamped on the nameplate.

7.2.5 Each bushing shall have 60 Hertz withstand test with partial discharge measurements. The withstand test values shall be in accordance with the ANSI/IEEE standards.

7.2.6 The maximum allowed partial discharge limits shall be as follows:

a. Operating Voltage to Ground, 10 microvolts.

b. Operating Voltage to Ground times 1.5, 50 microvolts.

7.2.7 The Manufacturer shall measure and record the partial discharge at the voltage withstand level.

7.2.8 A certified test report shall be furnished to the AE for each bushing.

8 OTHER REQUIREMENTS

8.1 Provisions for Lifting

8.1.1 All bushings shall be equipped with suitable lifting lugs so that the bushings can be lifted with slings without having to attach clamps.

8.2 Color

8.2.1 Bushing color shall be ANSI #70 light gray.

8.3 Gaskets

8.3.1 All bushings shall be supplied with gaskets for the bushing flange. All gaskets shall be made of high temperature Viton or cork neoprene.

8.4 Bushing Nameplate

8.4.1 The Contractor shall supply all nameplates as specified in the ANSI/IEEE standards. All nameplates shall be made from non-rust stainless steel. The information contained on the nameplates shall be inscribed and painted black or red. All the information shall be in English and in standard non-metric units of measure.

8.4.2 The following information shall be stamped on each bushing nameplate:

a. Manufacturer Name

b. Manufacturing Date

c. Catalog/Style Number

d. Drawing Number

e. Voltage Class

f. Ampere Rating

g. Serial Number

h. Shop Order Number

i. Full-wave Impulse Level, kV (BIL)

j. C1 power factor and capacitance at 20° C for capacitance-graded bushings

k. C2 power factor and capacitance at 20° C for capacitance-graded bushings

l. "Hot Collar" watts-loss measurement and temperature for solid bushings

m. Weight

n. A decal noting that the oil in the bushing is "PCB FREE." The test method used for analysis of PCB shall be EPA Method 608-1990.

8.5 Shipping

8.5.1 All bushings furnished under this specification shall be shipped fully assembled. All loose parts for each bushing shall be packaged in the crate and properly identified (including purchase order item number). Partial shipment of bushing components is not acceptable. All bushings shall be shipped such that they are not damaged in transit or by reasonable lifting and handling. If special positioning or indoor storage is required, this information shall be clearly marked on the shipping package as well as appearing in the instruction book.

8.5.2 Each crate shall bear a waterproof tag containing the following information:

a. Purchaser

b. Purchase order number

c. Purchase order item number

d. Manufacturer

8.5.3 All crates shall be constructed of wood and shall be suitable for handling with a forklift, overhead crane, or other mechanical means without the need for a pallet. The crates shall be of sufficient strength to withstand stacking two (2) high for outdoor storage for one (1) year.

8.5.4 A packing list shall be furnished by the Contractor including a description and the total number of each item in the crate.

8.6 Inspection

The City of Austin reserves the right to visit the manufacturing facility and observe the construction and testing of the bushing(s). The Contractor may not charge AE for its right to visit the facility during the construction and testing. The Contractor shall give the AE advance notice of at least two (2) weeks before start of testing.

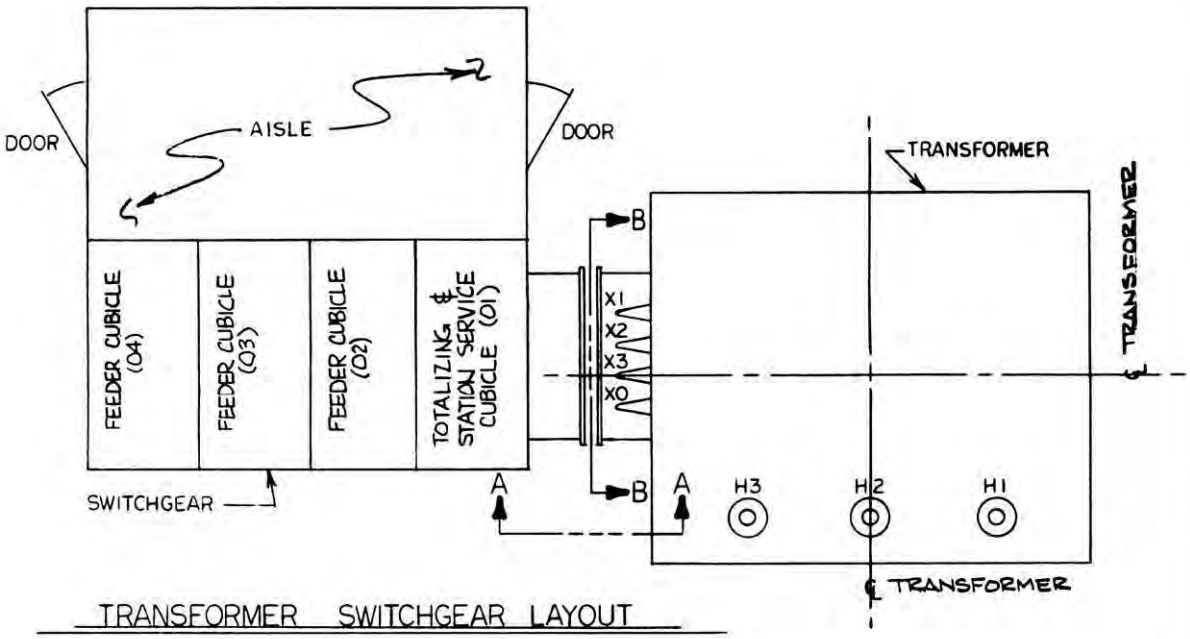

TRANSFORMER SWITCHGEAR LAYOUT

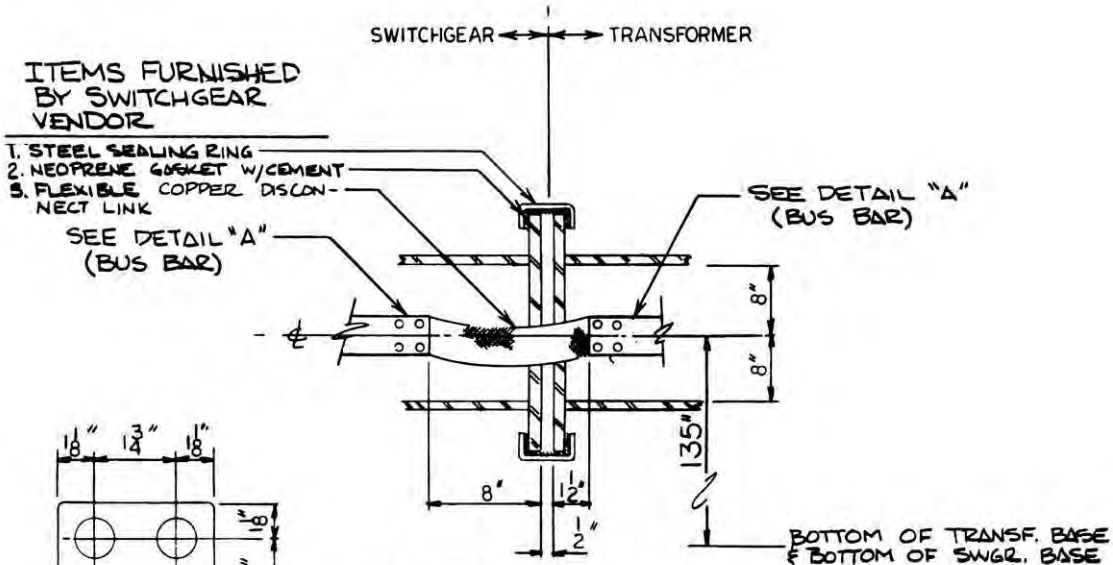

SECTION A~A

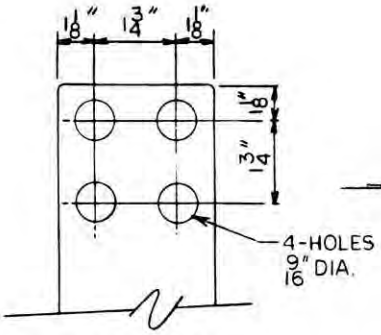

DETAIL "A"

SILVER PLATED COPPER

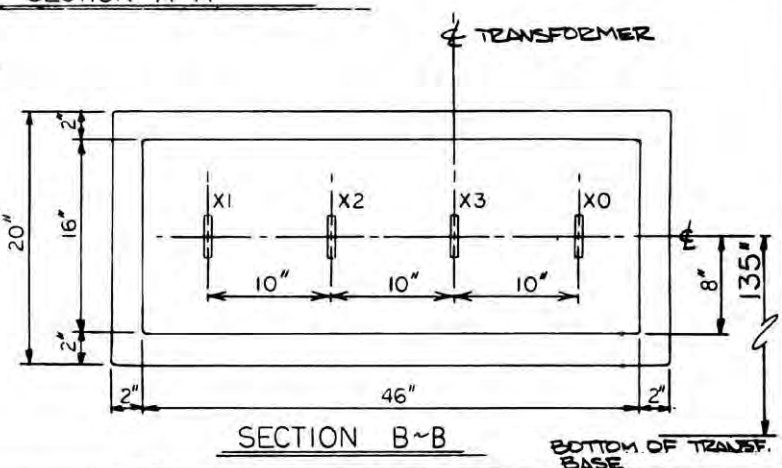

SECTION B~B

CITY OF AUSTIN, TEXAS ELECTRIC DEPARTMENT ENGINEERING DESIGN DIVISION	TITLE: 138 KV – 12.5 KV TRANSFORMER/SWITCHGEAR CONNECTION	DATE: 1/20/76	
		SCALE: NONE	
		DRAWING NUMBER	REV.
	APPROVED Trokell JBM RJB	7D 283-1	1

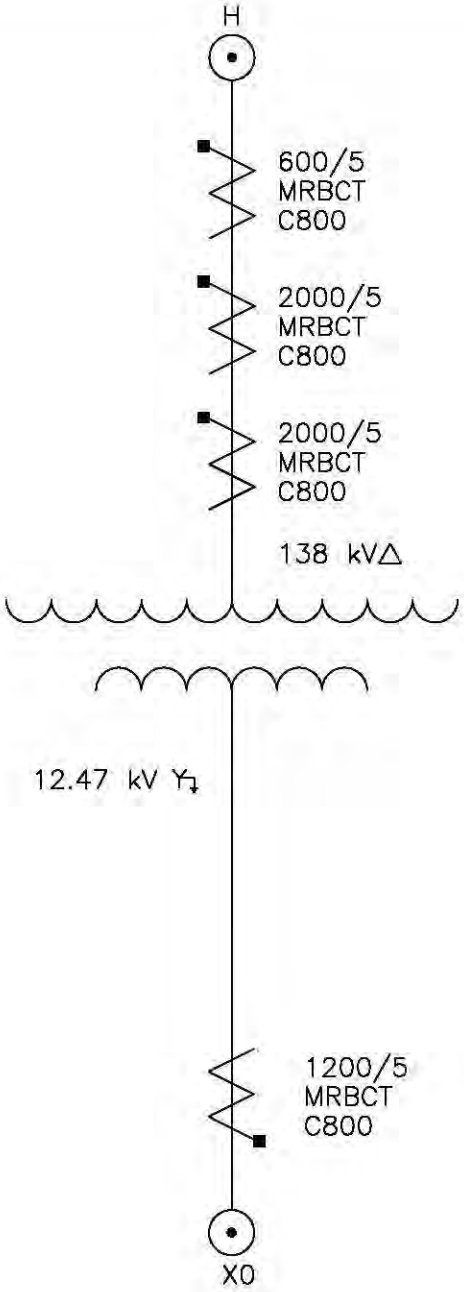

CT REQUIREMENTS FOR
138–12.47 kV
POWER TRANSFORMER

NOTE:
1. ALL BUSHING CT'S SHALL BE RELAYING ACCURACY CLASS C800.
2. EACH PHASE SHALL HAVE CT'S AS SHOWN ON THE ONE–LINE.
3. MRBCT MEANS MULTIRATIO BUSHING CURRENT TRANSFORMER.
4. ALL CT'S ON THIS DRAWING ARE FOR CUSTOMER USE ONLY.

AUSTIN ENERGY POWER DELIVERY ENGINEERING	TITLE: TRANSFORMER ONELINE REQUIREMENTS	DRAWN: PKW	SCALE: N.T.S.
		CHECKED:	FILENAME: 7E–801.DWG
		DATE: 11–30–09	DRAWING NO.: 7E–801

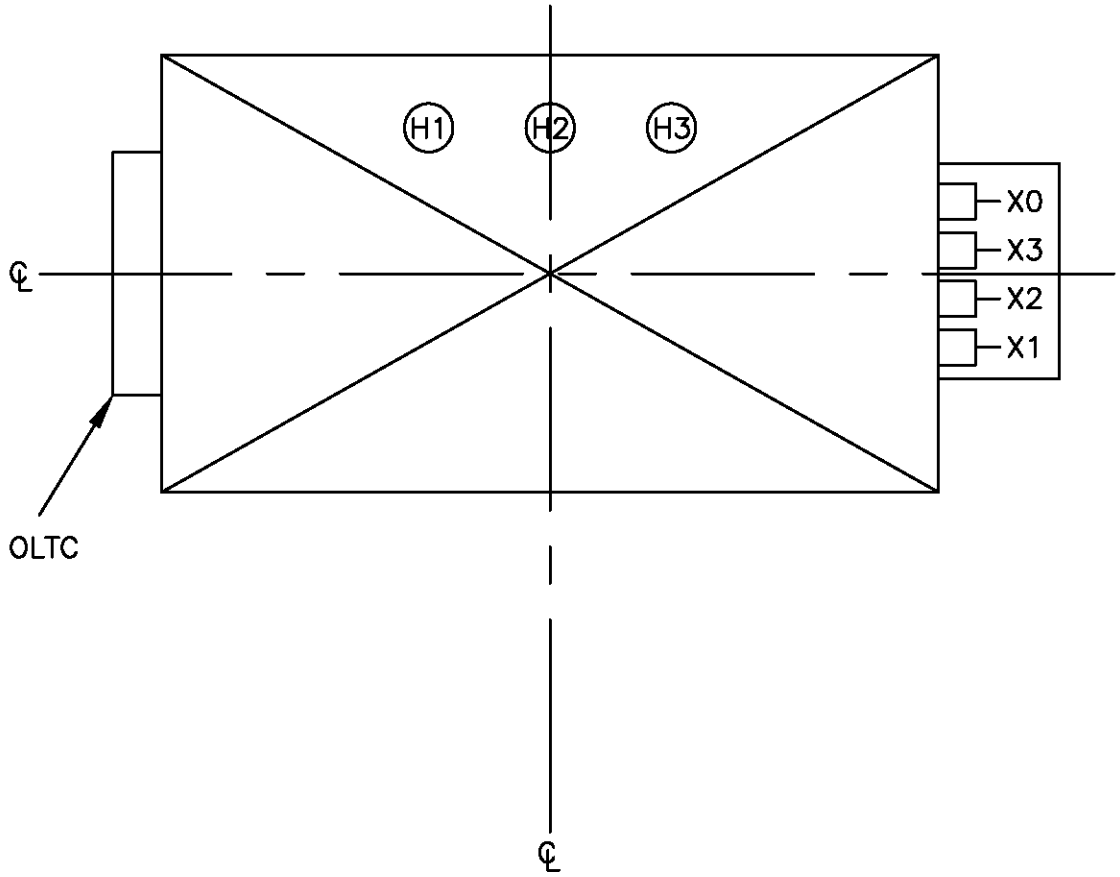

AUSTIN ENERGY POWER DELIVERY ENGINEERING	TITLE: TRANSFORMER OUTLINE 138–12.47 kV	DRAWN: PKW	SCALE: N.T.S.
		CHECKED:	FILENAME: 7E–800.DWG
		DATE: 4–25–02	DRAWING NO.: 7E–800

BILL OF MATERIALS				
DETAIL/ITEM	QTY.	CSN	ERN	DESCRIPTION
D1	3	---		PARALLEL GROUND GRID CONNECTOR
D23	3	---		GROUNDING CLAMP TO FLAT STEEL
D30	2	---		GROUND CLAMP TO 6" STEEL PIPE
D31	1	---		GROUND CLAMP TO 4" STEEL PIPE
D33	1	---		CONNECTOR TO STEEL BRACKET
D39	2	---		TWO-HOLE BOLTED GROUND CONNECTOR
D40	2	---		PARALLEL GROUND GRID CONNECTOR
D48	3	---		TWO-HOLE BOLTED GROUND CONNECTOR
1	100'	28016115003		4/0 COPPER, 19 STRAND

NOTES:

1. FOR DETAILS SEE DWGS. 7D-3000-D1, D23, D30, D31, D33, D39, D40 & D48.
2. TAPE GROUND CABLES WITH ELECTRICAL TAPE BEFORE MAKING 90° BENDS TO PREVENT "BIRDCAGING".
3. REMOVE ALL TAPE AFTER BENDS ARE COMPLETED.

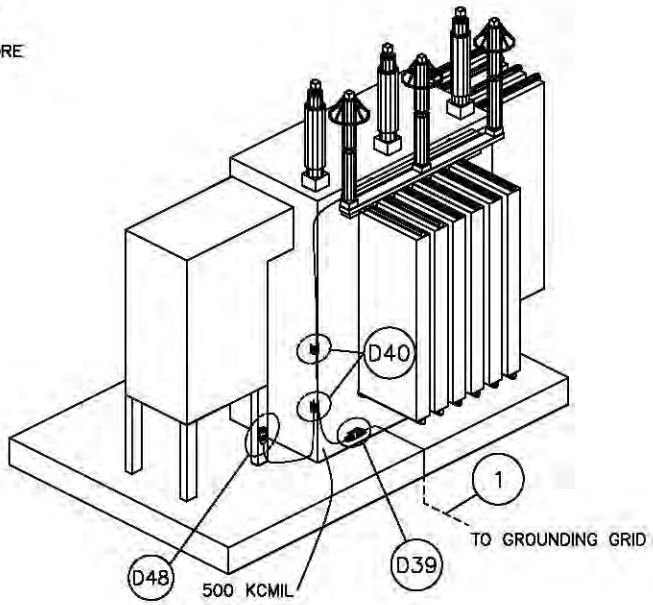

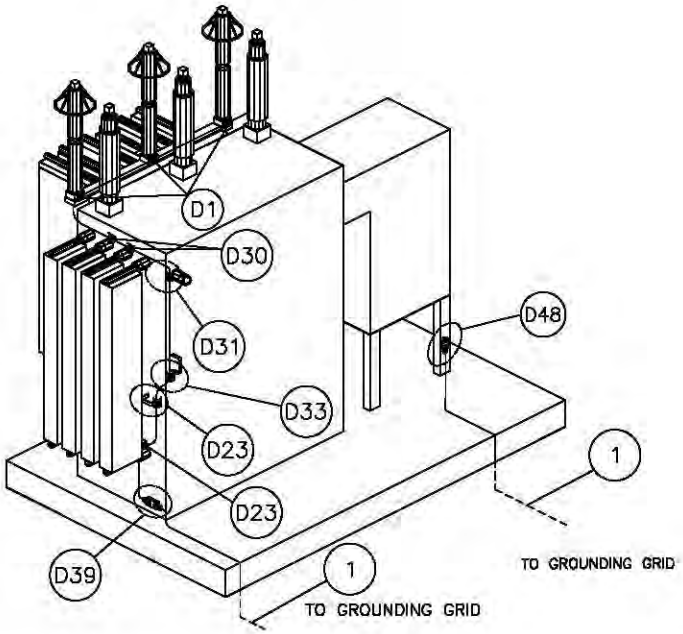

POWER TRANSFORMER W/ REMOTE SWITCHGEAR

AUSTIN ENERGY POWER DELIVERY TRANSMISSION ENGINEERING	TITLE: GROUNDING ASSEMBLY				DRAWN: WKD	SCALE N.T.S.
					CHECKED:	FILENAME: 3011-A5.DWG
	APPROVED:	WKD			DATE: 6-01-02	DRAWING NO.: 7D-3011-A5

For the manufacturer's use. The following specification form (or equivalent) for power transformers is suggested:

POWER TRANSFORMER SPECIFICATION

For: _____ Date: _____
Proposal No.: _____ Spec. No. _____ Item No. _____

RATING					
Type		Class	H Winding	X Winding	Y Winding
Phase			V	V	V
Hertz			kVA	kVA	kVA
Temp Rise			kVA	kVA	kVA
Insulating Liquid			kVA	kVA	kVA

ADDITIONAL TAP VOLTAGES	
H Winding	
X Winding	

CONNECTIONS FOR OPERATION						
Transformers in Bank	To Transformer From	Phase	Connected	To Transformer To	Phase	Connected

PERFORMANCE BASED ON A LOADING OF		
H Winding	kV	MVA
X Winding	kV	MVA
Y Winding	kV	MVA

DIELECTRIC TEST

Applied voltage (To other windings and ground)
H Winding _____ kV
X Winding _____ kV
Y Winding _____ kV

Induced Voltage
Line to Line _____ kV
Line to Grond _____ kV

INSULATION LEVELS

ITEMS	Basic Lightning Impulse Insulation Level	Low Frequency Voltage Insulation Level
H line		
H neutral		
X line		
X neutral		
Y line		

PERFORMANCE DATA. Based on _____ °C Reference Temperature					
Losses and Exciting Current				Full Load Regulation	
Excitation	% Exciting Current	No Load	Total Loss	Power Factor	% Regulation
100%				1.0	
100%				0.8	

AUXILLIARY LOSSES			
AT	MVA	Class	Watts Aux Loss
	W		
	W		
	W		
Average Sound Level			

PERCENT IMPEDANCE VOLTS					
% IZ	Between Windings	At MVA	% IZ	Between Windings	At MVA
	H-X				
	H-Y				
	H-Y				

EFFICIENCIES					
Load		Full Load	3/4 Load	1/2 Load	1/4 Load
%					

MECHANICAL DATA
Not for Construction Purposes

Outline Dwg. No._____

Dimensions (Approximate) Ft (m)
Height (A) _____
Width (B) _____
Depth (C) _____
Height over Cover (D) _____
Untanking (Plus Slings) (E) _____

Masses / Approximate / pounds (kg)
Core and Coils _____
Tank and Fittings _____
Liquid _____ Gallons (m^3) _____
Total Mass _____
Shipping Mass lb (kg) _____
Shipped lb (kg) _____

AUSTIN ENERGY
DESIGN AND QUALITY ASSURANCE REVIEW PLAN

The following information outlines the process that will be followed during the design review to be held on the subject 138-12.47 and 138x69-12.47 KV transformers for the City of Austin, Texas.

1 REVIEW OF DESIGN

The manufacturer is requested to provide the following information prior to the meeting. This information should be tabulated and submitted to the COA as soon as possible.

- Winding layout with the type of windings noted and the insulation clearances between windings and to ground.
- Calculated radial and axial short circuit stresses.

1.1 Winding Layout

1.1.1 Arrangement of windings.

1.1.2 Type windings used.

1.1.3 Conductor configurations in each winding.

1.1.4 Tap windings and location of taps in windings. Load and de-energized.

A. Location and design of tap winding or tap section.

B. Construction of tap leads and attachment to winding.

C. Conductor configuration

1.2 Insulation Clearances and Configuration.

1.2.1 Electrostatic shielding in windings

1.2.2 Insulation clearances.

A. Between windings

B. Between windings and ground.

1.2.3 Geometry of insulation

1.2.4 Conductor insulation type and thicknesses in each winding.

1.2.5 Transient voltage distribution

A. Use of Metal Oxide protection across windings if any.

B. Review of calculation methods.

C. Calculated voltages.

1. Within windings.

2. Induced voltages in other windings.

3. Acceptance criteria for these voltages.

1.3 Coil Conductor Sizes and Calculated Load Losses

1.3.1 Transposition in windings.

1.3.2 Calculated load losses.

A. Review of calculation method.

B. Expected calculated vs. test variation.

1.3.3 Calculation of leakage fields.

A. Describe fields computation methods used.

B. Outline of analysis method used for calculation of leakage losses and heating in coils, connections and leads.

1.3.4 Calculated temperature rises in winding components subject to leakage flux heating.

A. Connections

B. Leads.

1.3.5 Control of circulating currents

1.3.6 Leakage reactance.

A. Calculated values between all winding combinations.

B. Expected variation calculated vs. test.

C. Variation with tap position.

D. Paralleling information.

1.4 Core Configuration and Materials.

1.4.1 Core geometry, method of stacking, and gaps.

1.4.2 Design induction.

1.4.3 Ventilation of core.

1.4.4 Core material.

A. Supplier
B. grade

1.4.5 Acceptable slitting and shearing burrs.

1.4.6 Core grounding.

1.4.7 Calculated no load losses and exciting current at 100 and 110% voltage. Calculations to meet the 110% excitation at no load and 105% overvoltage with full load and 0.8 power factor on the loaded winding.

1.4.8 Leakage flux heating considerations in core. Core hot spot temperature at worst-case excitation and the method of calculating the temperature.

1.5 Internal Core and Winding Support Structures.

1.5.1 Outline of construction.

A. Review of heating problems in lockplates, core surface, and frames.

1.6 Internal Leads, Connections, and Bushing Clearances.

1.6.1 Design, routing, and support of leads to tap changers and bushings.

1.6.2 Design, routing, and support of connections between windings.

1.6.3 Review of induced and transient voltages between leads and to ground.

A. Tabulation of voltage stresses.

B. Withstand voltages compared to stresses.

1.6.4 Clearances from lower end of bushings to ground and to other live parts.

A. Lower bushing shields and insulation.

1.6.5 External clearances between bushings-conformance with ANSI/IEEE.

1.6.6 Tap Changers.

A. Type and manufacturer of load tap changer.

1. Rating as related to contact life and maintenance.

2. Expected contact life including definition of contact life.

3. Maintenance requirements.

B. De-energized tap changer type and manufacturer.

1. Location in winding.

2. Expected contact life including definition of contact life.

1.7 Short Circuit Design

1.7.1 Calculated stresses in windings compared to allowed stresses. Include any special considerations for the Tertiary.

A. Review of method used to calculate leakage fields, forces and stresses.

B. Review criteria for short circuit withstand values including data from full size transformer and model tests.

1.7.2 Frame and support design and calculated forces on support members compared to allowed.

1.7.3 Density of pressboard used in barriers, spacers and end insulation.

1.7.4 Winding processing and compression during drying operations.

1.7.5 Control of winding tightness during core building.

1.7.6 Final clamping of windings.

1.7.7 Short circuit performance in service.

1.8 Cooling

1.8.1 Calculated winding and oil rises.

1.8.2 Hot spot rises and the calculated values for each winding.

A. Oil flow patterns in windings.

B. Calculation methods for determining hot spots. It is expected that the method will include oil flow, localized losses, and insulation thicknesses.

C. Calculated hot spots in windings and leads.

1. Review of all winding hot spots.

2. Leads to bushings and between windings.

3. Tap leads across windings and to tap changers.

1.8.3 Heat exchangers and fans used. Discussion of leaks.

A. Cleaning requirements in service.

B. Service record of proposed heat exchangers and fans.

1.9 Tank Design and Oil Preservation.

1.9.1 Tank

A. Construction

1. Tank design and welding procedures to prevent leaks.

B. Shielding of tank (if any).

1.9.2 Oil preservation system.

1.9.3 Gaskets

A. Gasket groove design.

B. Gasket materials.

2 WEIGHTS AND DIMENSIONS

3 SYSTEM AND OPERATING RELATED ASPECTS

4 REVIEW OF PROPOSED LAYOUT OF TRANSFORMER AND ACCESSORIES

5 TEST PROGRAM

5.1 Review of requirements.

5.2 Test plans for the transformers.

5.3 Accuracy of loss measurements. Accuracy specified must be justified.

5.4 Temperature tests.

5.5 Partial discharge testing and acceptance criteria.

5.6 Gas in oil testing and acceptance criteria.

5.7 Check points during testing.

5.8 Review of Test Department problems. Test Floor failure record for the past 5 years. Written data is required.

6 REVIEW ANY REMAINING QUESTIONS OR EXCEPTIONS

Review of specification and resolution of any questions or exceptions.

7 PREPARATION FOR SHIPMENT, FIELD INSTALLATION AND PROCESSING WITH EMPHASIS ON SIMPLIFICATION

7.1 Dryness at time of shipment and method used to determine dryness.

7.2 Expected dryness when received at site and method for determining.

7.3 Instructions for installation.

7.3.1 Processing required.

7.3.2 Oil characteristics after filling.

8 SPECIAL DESIGN ISSUES

This will include the discussion of maintenance required in service and actions taken by the manufacturer to reduce maintenance costs.

9 QUALITY ASSURANCE PROGRAM

Special check points.

10 EXPERIENCE RECORD IN SERVICE

In service problem and failure history for the past 5 years. Written data is required.

11 DEVELOP ACTION LIST WITH SCHEDULE FOR COMPLETION OF OPEN ITEMS.

CITY OF AUSTIN
PURCHASING OFFICE
PROPOSAL PREPARATION INSTRUCTIONS AND EVALUATION FACTORS
SOLICITATION NUMBER: RMJ0304

1. **PROPOSAL FORMAT**

Prefacing the proposal, the Proposer shall provide an Executive Summary of three (3) pages or less, which gives in brief, concise terms, a summation of the proposal. The proposal itself shall be organized in the following format and informational sequence:

A. **Business Organization**: State full name and address of your organization and identify parent company if you are a subsidiary. Specify the branch office or other subordinate element which will perform, or assist in performing, work herein. Indicate whether you operate as a partnership, corporation, or individual. Include the State in which incorporated or licensed to operate.

B. **Authorized Negotiator**: Include name, address, and telephone number of person in your organization authorized to negotiate Contract terms and render binding decisions on Contract matters.

C. **Price Proposal**: Complete Section 0705, Price Proposal Sheet. Please note that the evaluated cost for the transformer includes the values of No Load Losses, Load Losses, and Auxiliary Losses to represent the total owning cost and be used to determine the best cost value for the City. For more information about the incorporation of these loss values reference Specifications (Section 0505). In addition, the following requirements shall be included in the Proposal and submitted for evaluation.

i. The Unit Price submitted for each transformer shall include transformer oil and delivery as required to fill and process the transformer in accordance with the Solicitation, crane service for placing the transformer onto the pad or designated unloading location, assembly service to install items removed for shipment, personnel, packing material disposal, tools, equipment, processors etc. and field tests as specified or required to verify that the unit is ready to energize, and any other related cost and or charges. This is the total price for full compliance with this Solicitation.

ii. The Proposer shall furnish information, including cost, regarding recommended training courses available on the operation and maintenance of the transformer, which might be available to Austin Energy engineering and maintenance personnel. These options may be purchased by Austin Energy as part of the transformer purchase.

iii. The Proposer shall provide a list of recommended spare parts, including prices and catalog numbers. In addition, the bidder shall state what special tools are required for the installation and maintenance of the transformer. These options may be purchased by Austin Energy as part of the transformer purchase.

D. **Delivery Lead Time**: State your guaranteed lead time to deliver and complete all associated services after receipt of a Delivery Order. Identify intermediate milestones as applicable.

E. **Technical Concept and Solution**: Define in detail your understanding of the requirements presented in the Scope of Work (Section 0500) and Specifications (Section 0505) of this request for proposal and your compliance with these requirements. Also state where there are any discrepancies between your product and the Specifications. Provide all details as required in these Specifications and any additional information you deem necessary to evaluate your proposal. Include the following:

i. State any exceptions or deviations from the technical requirements listed in this Solicitation, including the Scope of Work (Section 0500) and Specifications (Section 0505). Unless stated otherwise with specific reference to the relevant clause and detailed explanation of the variation, the Proposer guarantees full compliance.

ii. The type of construction to be used, features of the design, and important accessories such as load tap changer, all bushings, and lightning arresters. Please provide part numbers, cut-sheets and/or other means of identification for the important accessories as well as a schematic diagram of the windings including the on load tap changer.

iii. Schematic diagrams of winding connection and explanations of principal design features such as short circuit strength, cooling circuitry, lead support structure, and anchoring method of the core and coil assembly.

iv. Engineering drawings of the design including outline of tank, cooling equipment, on load tap changer, control cabinet, and bushings showing approximate dimensions shall be provided.

v. The supply voltage(s) and single and/or three-phase power requirements of the transformer auxiliaries.

vi. Paint system proposed for use on the transformers.

vii. A fully completed “Power Transformer Specification” form as per Attachment VI.

viii. Expected time necessary to complete vacuum filling and field processing of the transformer as well as detailed procedures outlining the steps necessary to complete these tasks.

ix. A complete and detailed listing of all test floor and field failures for the past five (5) years from the proposal closing date, and for each failure, a detailed explanation on the cause of the failure and the corrective actions taken for each failure. Omission of this information shall be grounds for rejection of the bid.

x. Provide test data for all transformers that the manufacturer has short circuit tested including the unit size, winding material, test results, and test date for each.

xi. Calculations shall be provided by the manufacturer demonstrating that the transformer will successfully operate in parallel with the current transformer using the tested impedance and the tested temperature rises of the new transformer.

xii. Percentage maximum total measurement error for the no load loss measurement and the load loss measurement systems as well as the calculation method.

xiii. Calculations of both the “free” or unsupported buckling and “forced” or beam bending stresses for all inner windings and the withstand criteria.

xiv. Special tools required for the installation and maintenance of the transformer.

xv. Bushing sizes.

xvi. Manufacturer’s (OEM) test reports (certificates of test) for each current transformer.

xvii. Manufacturer’s (OEM) Factory Acceptance Test (FAT) report and the acceptance criteria.

xviii. Control scheme to accomplish the primary mode of operation.

xix. Verification that the selected OLTC meets the requirements contained in this section.

xx. Certification that the air leakage rate through the rubber to prevent saturation is greater than 10 years.

xxi. The Proposer shall provide the following values to be guaranteed.

a. No-load losses at 20° C at 1 raise OLTC tap position. If the transformer has an OLTC utilizing variable volts per turn design, the no-load losses shall be measured and guaranteed on the OLTC position having the highest no-load losses.

b. The Proposer should state at what OLTC position the no-load losses are guaranteed.

c. Load losses at 85° C when loading the transformer 138 kV to 12.47 kV at 18 MVA at the 1 raise OLTC tap position on Unit items 1 and 2, 138 kV to 12.47 kV at 24 MVA at the 1 raise OLTC tap position on Unit item 3, 138 kV to 12.47 kV at 30 MVA at the 1 raise OLTC tap position on Unit item 3, 138 kV to 12.47 kV at 30 MVA at the 1 raise OLTC tap position on Unit item 4, 138 kV to 12.47 kV at 40 MVA at the 1 raise OLTC tap position on Unit item 5, and 138 kV to 12.47 kV at 42 MVA at the 1 raise OLTC tap position on Unit item 6.

d. The percent impedance's corrected to 85° C from 138 kV to 12.47kV on 18 MVA base Unit item 1, from 69 kV to 12.47 kV for 138 x 69 kV transformers on 18 MVA base for Unit item 2, from 138 kV to 12.47 kV on 24 MVA base for Unit item 3, from 138 kV to 12.47 kV on 30 MVA base for Unit item 4, from 138 kV to 12.47 kV on 40MVA base for Unit item 5, and from 69 kV to 35 kV for 138 x 69 kV transformers on 42 MVA base for Unit item 6.

F. **Demonstrated Applicable Experience**: Proposer shall describe its experience relevant to providing the transformers in this Solicitation. If the Proposer is not the manufacturer, the Proposer shall supply information describing the experience of the manufacturer. The minimum qualifications and associated minimum submittals are listed below. Proposer is encouraged to supply other information as they deem necessary to be considered in the City's evaluation.

i. The Proposer should provide evidence of Quality Management System such as ISO-9001.

ii. The Proposer shall have designed, fabricated, tested and delivered a minimum of twenty (20) transformers of the same basic ANSI/IEEE design as offered to Austin Energy with one winding being 138 kV or greater in the past five (5) years at the transformer facility to be used to produce the transformers for Austin Energy.

iii. The Proposer shall have designed, fabricated, tested, and delivered a minimum of ten (10) transformers of the same basic ANSI/IEEE design as offered to Austin Energy with equivalent MVA parts of 10 MVA per phase or greater in the past five (5) years at the transformer facility to be used to produce the transformers for Austin Energy.

iv. The Proposer should include a tabulation of at least the minimum number of transformers produced at the manufacturing facility offered to clearly indicate compliance with the requirements in items iii and iii above. The tabulation shall include the purchaser (company name, location, contact person, contacts person's telephone number, etc.), MVA rating, Voltage rating (HV and LV), and year of manufacture.

v. Provide the location of your manufacturing facility that will be used to produce the products specified in this Solicitation.

vi. The Proposer shall provide installation and maintenance staff and a service facility for the five (5) year warranty period in North America. The Proposer should state the location of the installation and maintenance staff and where the service facility is located.

vii. Pertaining to the factory that will manufacture the units in this Solicitation, the Proposer should provide a complete and detailed listing of all the transformers, at the requested MVA and voltage rating of this Solicitation, that were designed, fabricated, tested, and delivered to the United States market for the past five (5) years, from the proposal closing date. The list shall include the purchaser (company name, location, contact person, contacts person's telephone number, etc.), MVA rating, Voltage rating (HV and LV), and year of manufacture. The list shall also include any failures, non-conformances, delivery and installation issues, an explanation on the cause of these, and the corrective actions taken to resolve them.

2. **ADDITIONAL PROPOSAL TERMS**

A. **Local Business Presence**: The City seeks opportunities for businesses in the Austin Corporate City Limits to participate on City contracts. A firm (Offeror or Subcontractor) is considered to have a Local Business Presence if the firm is headquartered in the Austin Corporate City Limits, or has a branch office located in the Austin Corporate City Limits in operation for the last five (5) years, currently employs residents of the City of Austin, Texas, and will use employees that reside in the City of Austin, Texas, to support this contract. The City defines headquarters as the administrative center where most of the important functions and full responsibility for managing and coordinating the business activities of the firm are located. The City defines branch office as a smaller, remotely located office that is separate from a firm's headquarters that offers the services requested and required under this solicitation. Points will be awarded through a combination of the Offeror's Local Business Presence and/or the Local Business Presence of their subcontractors. Evaluation of the Team's Percentage of Local Business Presence will be based on the dollar amount of work as reflected in the Offeror's MBE/WBE Compliance Plan or MBE/WBE Utilization Plan. Specify if and by which definition the Offeror or Subcontractor(s) have a local business presence.

B. **Proposal Acceptance Period**: All proposals are valid for a period of one hundred and eighty (180) calendar days subsequent to the RFP closing date unless a longer acceptance period is offered in the proposal.

C. **Proprietary Information**: All material submitted to the City becomes public property and is subject to the Texas Open Records Act upon receipt. If a Proposer does not desire proprietary information in the proposal to be disclosed, each page must be identified and marked proprietary at time of submittal. The City will, to the extent allowed by law, endeavor to protect such information from disclosure. The final decision as to what information must be disclosed, however, lies with the Texas Attorney General. Failure to identify proprietary information will result in all unmarked sections being deemed non-proprietary and available upon public request.

D. **Proposal Preparation Costs**: All costs directly or indirectly related to preparation of a response to the RFP or any oral presentation required to supplement and/or clarify a proposal which may be required by the City shall be the sole responsibility of the Proposer.

3. **EXCEPTIONS**:

Be advised that exceptions to any portion of the Solicitation may jeopardize acceptance of the Proposal.

The terms and conditions stated in this RFP shall constitute the terms and conditions of the final contract with the successful Proposer after award. If any exceptions are taken by a Proposer to any term or condition of this RFP, the Proposer must clearly indicate each specific exception taken, include a full explanation of the reason for said exception, and include any proposed language for any alternative term as a separate attachment to the Proposal, stating clearly in writing that the Proposer's Contract or Legal staff have reviewed and proposed all such terms in the Proposer's exceptions. Proposer must also certify in their proposal, that its authorized agents have reviewed all terms and

conditions of the RFP, and, except for any exceptions, have authority to bind Proposer to comply with all of the City of Austin's terms and conditions. The failure to identify exceptions or proposed changes with a full explanation and substitute language shall constitute acceptance by the Proposer of the Solicitation as proposed by the City.

The City reserves the right to reject a proposal containing exceptions, additions, qualifications or conditions not called for in the Solicitation. Additionally, all exceptions or supplemental terms and conditions proposed by a Proposer in response to any portion of this RFP but not submitted at the time required for submitting of the Initial Proposal (i.e., the specified RFP closing date and time listed on the cover sheet of the Solicitation) may be rejected at the sole discretion of the City.

4. EVALUATION FACTORS AND AWARD

A. **Competitive Selection**: This procurement will comply with applicable City Policy. The successful Proposer will be selected by the City on a rational basis. Evaluation factors outlined in Paragraph B below shall be applied to all eligible, responsive Proposers in comparing proposals and selecting the Best Offeror. Award of a Contract may be made without discussion with Proposers after proposals are received. Proposals should, therefore, be submitted on the most favorable terms.

B. **Evaluation Factors**:

i. 100 points.

a. Technical Concept and Solutions Proposed (reference Section 1E) – **15 points**

b. Demonstrated Applicable Experience (reference Section 1F) – **40 points**

c. Delivery Lead Times (reference Section 1D) – **5 points**

d. Total Evaluated Cost (reference Section 1C) – **30 points**

e. Local Business Presence (reference Section 2A) – **10 points**

Team's Local Business Presence	Points Awarded
Local business presence of 90% to 100%	10
Local business presence of 75% to 89%	8
Local business presence of 50% to 74%	6
Local business presence of 25% to 49%	4
Local presence of between 1 and 24%	2
No local presence	0

ii. Offeror Qualification & Award Process

a. The City will award to the Best Offeror. The apparent Best Offeror, may, at the City's option, be further evaluated to ensure compliance with the requirements of the Solicitation.

b. The apparent Best Offeror, may, at the City's option, be required to submit evidence of sufficient financial stability to be able to perform its obligations under the resulting contract. The City will review the financial data and provide the analysis and corresponding pass/fail determination to the Offeror. If the Offeror passes, the City may, at its option, further evaluate the Offeror as stated below.

c. The City will provide a questionnaire/checklist for the Offeror to complete in response to the categories list below. Further evaluation, including verification of the Offeror's response will take place at the manufacturing facility that will be used to produce the products Offered to the City for this Solicitation. The evaluation will be conducted by personnel designated by the City. The following categories will be evaluated to verify compliance with the requirements of this Solicitation:

   i. Technical Organization

   ii. Analytical Capability

   iii. Manufacturing Facilities and Personnel

   iv. Manufacturing Process

   v. Test Facilities and Personnel

   vi. Quality Control and Quality Assurance

   vii. Record of Performance

   viii. Repair Facility

   ix. Installation and Startup

   x. Field Service

d. AE will supply a detailed audit report based on the evaluation to the audited Offeror within ten (10) working days of evaluation.

e. If the Offeror passes the evaluation, the Offeror will be recommended for Contract Award. If the Offeror does not pass the evaluation, the next apparent Best Offeror, may, at the City's option, be further evaluated to ensure compliance with the requirements of this Solicitation. This process will continue until the Best Offeror is determined by the City.