DESIGN-BUILD

REQUEST FOR QUALIFICATIONS

FOR

FIRE AND EMS STATION REBUILD AND RENOVATIONS

AFD STATION 22 / EMS STATION 12 REBUILD
AFD STATION 1 / EMS STATION 6 RENOVATION
AFD STATION 3 RENOVATION

SOLICITATION NO. CLMA029

CIP ID: 12420.001

PROJECT MANUAL
Design Criteria Manual

Volume 3 of 3

ISSUE: July 1, 2019

DUE: August 15, 2019

PRIOR TO: 2:00 PM

DELIVER TO:

CAPITAL CONTRACTING OFFICE
CONTRACT PROCUREMENT DIVISION
ATTN: Michelle Croft
505 BARTON SPRINGS RD., SUITE 1045-C
AUSTIN, TX 78704

Design Criteria Manual for Fire and EMS Station Rebuild and Renovations

AFD Station 22 / EMS Station 12 Rebuild
AFD Station 1 / EMS Station 6 Renovation
AFD Station 3 Renovation

June 11, 2019

This Design Criteria Manual is not to be used for regulatory approval, permitting, or construction.

Table of Contents

1 | EXECUTIVE SUMMARY 01

A. Executive Summary 03
1. Purpose of the Design Criteria Manual 03
2. Background 03
3. Project Description 04
4. Steps Following the Selection of the Design-Builder 06
5. Concept Collaboration 06
6. General Project Locations 07

2 | APPROVAL 11

3 | DESIGN CRITERIA MANUAL CONTRIBUTORS 15

4 | SPACE/ADJACENCY ANALYSIS & REQUIREMENTS 19

A. Design Strategies 21
1. All Stations 21
2. AFD 22 / EMS 12 (Only) 21
B. Special Requirements 22
1. AFD 1 / EMS 6 22
2. AFD 3 22
3. AFD 22 / EMS 12 22

5 | SITE ANALYSIS 25

AFD 1 / EMS 6
A. Project Area Map 27
B. Summary Description 28
1. Description 28
2. Additional Site Requirements 28
C. Existing Site Surveys & Analysis 29
1. Record Site Survey 29
2. Deeds, Legal Restrictions, and/or Lease Agreements 29
3. Utilities, Meters and Service Lines 30
4. Stormwater and Drainage 30
5. Driveways & Parking 30
6. Circulation and Access 30
7. Site Amenities 30
8. Exterior Signs (Wayfinding & Advertising) 31
9. Site Information 31
D. Site Development Requirements 36
1. Community Involvement 36
2. General Development Considerations 36
3. Other Items 38

AFD 3
A. Project Area Map 41
B. Summary Description 42
1. Description 42
2. Additional Site Requirements 42

Table of Contents

C. Existing Site Surveys and Analysis 43
1. Record Site Survey 43
2. Deeds, Legal Restrictions, and/or Lease Agreements 44
3. Utility Meters and Service Lines 44
4. Stormwater and Drainage 45
5. Driveways & Parking 45
6. Circulation and Access 45
7. Site Amenities 45
8. Exterior Signs (Wayfinding & Advertising) 46
9. Site Information 46
D. Site Development Requirements 51
1. Community Involvement 51
2. General Development Considerations 51
3. Other Items 56

AFD 22 / EMS 12
A. Project Area Map 59
B. Summary Description 60
1. Description 60
2. Additional Site Requirements 60
C. Existing Site Surveys and Analysis 63
1. Record Site Survey 63
2. Deeds, Legal Restrictions, and/or Lease Agreements 64
3. Utilities, Meters and Service Lines 64
4. Stormwater and Drainage 65
5. Driveways & Parking 65
6. Circulation and Access 66
7. Site Amenities 66
8. Exterior Signs (Wayfinding & Advertising) 66
9. Site Information 66
D. Site Development Requirements 71
1. Community Involvement 71
2. General Development Considerations 71
3. Other Items 75

6 | EXISTING BUILDING ANALYSIS 79

AFD 1 / EMS 6
A. Architectural 81
B. Structural 90
C. Mechanical 94
D. Electrical 95
E. Plumbing 96
F. Fire-Suppression Systems 96
G. Fire-Alarm Systems 96

AFD 3
A. Architectural 99
B. Structural 103
C. Mechanical 108

D. Electrical 108
E. Plumbing 108
F. Fire-Suppression Systems 109
G. Fire-Alarm Systems 109

AFD 22 / EMS 12
A. Architectural 111
B. Structural 115
C. Mechanical 125
D. Electrical 125
E. Plumbing 127
F. Fire-Suppression Systems 127
G. Fire-Alarm Systems 127

7 | PROPOSED CONCEPTUAL PROJECTS 129

All Stations
A. Program Design Goals 131
B. General Guidelines 131
1. Sustainable Design (LEED Practices) & Energy Efficiency 131
C. Design & Construction Phasing/Planning 132

AFD 1 / EMS 6
A. Feasibility Test Fit Drawings of Proposed Conceptual Project 135
B. Narratives of Proposed Conceptual Project 139
1. Architectural 139
2. Structural 141
3. Mechanical 142
4. Electrical 142
5. Plumbing 143
6. Fire-Suppression Systems 143
7. Fire-Alarm Systems 144

AFD 3
A. Feasibility Test Fit Drawings of Proposed Conceptual Project 147
B. Narratives of Proposed Conceptual Project 149
1. Architectural 149
2. Structural 150
3. Mechanical 151
4. Electrical 151
5. Plumbing 151
6. Fire-Suppression Systems 152
7. Fire-Alarm Systems 152

AFD 22 / EMS 12
A. Feasibility Test Fit Drawings of Proposed Conceptual Project 155
B. Narratives of Proposed Conceptual Project 157
1. Architectural 157
2. Structural 158
3. Mechanical 159

Table of Contents

4. Electrical 159
5. Plumbing 160
6. Fire-Suppression Systems 160
7. Fire-Alarm Systems 160

8 | TECHNICAL CRITERIA AND STANDARDS 163

A. General Guidelines & Design Standards 165
1. Codes 165
2. Accessibility 165
3. Quality 165
B. Architectural Standards 165
1. Exterior Finishes and Materials 165
2. Interior Finishes and Materials 166
3. Ceilings 166
4. Doors and Windows 167
5. Signage and Graphics 168
6. Apparatus Bay Doors 168
7. Art in Public Places (AIPP) - City of Austin Requirement 168
8. Equipment 169
9. Furnishings 169
10. Acoustics 169
11. Termite Control 170
12. Elevators 171
13. Flooring 171
14. Definitions 171
C. Structural Standards 171
1. Structural Design Criteria 171
2. Loads 172
3. Risk Category of Buildings 172
4. Deflection Criteria 172
5. Structural Tests and Special Inspection 172
6. Structural Framing 172
7. Structural Foundations 173
D. Mechanical Standards 173
1. HVAC Design Criteria 173
2. HVAC Systems 174
3. Exhaust Systems 176
4. Energy Recovery Ventilator System 176
5. Piping Systems 176
6. Air Distribution Systems 176
7. Pressurization 177
8. Controls 177
9. Building Systems Startup and Verification 177
E. Electrical Standards 178
1. Electrical Service 178
2. Electrical Distribution 178
3. Raceway and Feeder 178
4. Grounding 179
5. Lighting 179

6. Alerting System 180
7. Power 181
8. Wiring Devices 181
9. Emergency Power 182
10. Lightning Protection 182
11. Charging Station 182
12. PV Solar Panel Ready 182
13. Short Circuit and Coordination/ Arc Flash Study 182

F. Plumbing Standards 182
1. Water Service Connection 182
2. Domestic Water Service 183
3. Sanitary Sewer 183
4. Domestic Cold/Hot Water Distribution 184
5. Water Heater 184
6. Natural Gas 185
7. Plumbing Fixtures 185
8. Plumbing Demolition 186
9. Stormwater Piping 186
10. Pipe Sizing Criteria 186
11. Elevator Pit Drainage System 187

G. Fire-Suppression Systems Standards 187
1. General 187
2. Sprinkler Piping 188
3. Sprinklers 188

H. Fire-Alarm Systems Standards 188
1. General 188

I. Telecommunications Standards 189
1. General 189

9 | CONCEPTUAL PROJECT ESTIMATE 191

All Stations
A. General Statement 193

AFD 1 / EMS 6
A. Feasibility Test Fit Dwgs. for Proposed Conceptual Project w/ Keynotes 194
B. Cost Estimate of Proposed Conceptual Project 203
C. Summary Schedule of Design and Construction Phasing 210

AFD 3
A. Feasibility Test Fit Dwgs. for Proposed Conceptual Project w/ Keynotes 214
B. Cost Estimate of Proposed Conceptual Project 219
C. Summary Schedule of Design and Construction Phasing 224

AFD 22 / EMS 12
A. Feasibility Test Fit Dwgs. for Proposed Conceptual Project 228
B. Cost Estimate of Proposed Conceptual Project 231
C. Summary Schedule of Design and Construction Phasing 238

Table of Contents

10 | APPENDICES 241

APPENDIX A - SITE ANALYSIS EXHIBITS 243
AFD 1 / EMS 6 Lease 244
AFD 1 / EMS 6 Wastewater Tap Record 248
AFD 1 / EMS 6 Topo. & Improvement Survey 249
AFD 3 Deed 250
AFD 3 Water Tap Record 252
AFD 3 Wastewater Tap Record 253
AFD 3 Flood Profiles 254
AFD 22 / EMS 12 Deed 256
AFD 22 / EMS 12 Water Tap Record 259
AFD 22 / EMS 12 Existing Site Plan 260
Addition to EMS 12 Documents 262

APPENDIX B - ARCHITECTURAL EXHIBITS 269
National Register of Historic Places 270

APPENDIX C - STRUCTURAL EXHIBITS 273
AFD 1 / EMS 6 Level 1 Structural Grid 274
AFD 1 / EMS 6 Level 2 Structural Grid 275
AFD 1 / EMS 6 Roof Level Structural Grid 276
AFD 1/EMS 6 Annex Foundation Plan & Details 277

APPENDIX D - COMMUNICATIONS ROOMS 279
Station 24 - Door on End Wall 280
Station 26 - Door on Side Wall 281

APPENDIX E - PROTOTYPE PROGRAMMING 283

APPENDIX F - RECORD OF MEETINGS 295

APPENDIX G - SECTION ATTRIBUTIONS 301

APPENDIX H - ASBESTOS AND LEAD STUDIES 309
AFD 1 / EMS 6 Asbestos Study 310
AFD 1 / EMS 6 Lead Study 311
AFD 3 Asbestos Study 312
AFD 3 Lead Study 313
AFD 22 / EMS 12 Asbestos Study 314
AFD 22 / EMS 12 Lead Study 315

APPENDIX J - FUEL STATION 317

APPENDIX K - STRUCTURAL INVESTIGATIONS & GEOTECH REPORT 319
AFD 3 and AFD 22 / EMS 12 Summary Report - Ph. 1 319
AFD 3 and AFD 22 / EMS 12 Summary Report - Ph. 2 319
City Engineer letter from Forensic Study 319
AFD 3 and AFD 22 / EMS 12 Geotech Report 319

1 | Executive Summary

A. Executive Summary

1. Purpose of the Design Criteria Manual

a. The Fire and EMS Station Rebuild and Renovations Design Criteria Manual (DCM) is a set of standards, guidelines, and design criteria for renovating two and replacing one Austin Fire Department and EMS stations. The DCM also establishes design objectives to ensure the quality level desired by the City of Austin (Owner) for their station renovations. Additionally, the design objectives will allow the Design-Builder (D-B) the ability to design and construct each station in a manner that meets these requirements and is the most cost effective.

b. These standards will become part of a design-build contract and will serve as the basis for developing design solutions.

c. These standards should not preclude other design approaches if a particular standard does not apply or if, for functional or aesthetic reasons, an alternate approach should be considered. In such instances, a written request for variance may be presented to the Owner's Representative.

d. Time is of the essence on this project. The City of Austin intends to occupy the buildings and make use of the facilities as indicated in the Request for Proposals. Any deviation(s) proposed by the D-B will be subject to rigorous evaluation and will be rejected if it does not meet all criteria, both general and specific. Interpretation of the D-B's adherence to all criteria shall be exclusively within the judgment of the Owner. Aesthetic decisions for D-B adherence to the requirements shall be according to the judgment of the Owner.

2. Background

a. The following describes the general scope of the project:

1) AFD 1 / EMS 6 – Interior work includes extensive renovation of walls and ceilings, finishes, mechanical, electrical, and plumbing. Energy efficiency and accessibility improvements, along with an elevator addition.

2) AFD 3 – Bay replacement; includes demolition of bay structure and new construction of replacement bay adjacent to existing station.

3) AFD 22 / EMS 12 – Full station replacement; includes complete demolition of existing station, site work, and new construction of AFD 22 / EMS 12.

b. These three stations were chosen by the Owner as they are the next in line of the older stations that require renovation. A structural feasibility study was performed in order to properly identify repair requirements and a strengthening solution to the floor systems of AFD 3 and AFD 22 / EMS 12. Additionally, AFD 1 / EMS 6 had no such structural concerns. In its conclusion, Feasibility Study Report – Austin Fire Department Fire Stations Nos. 3 and 22, dated August 31, 2017, accomplished these goals as well as addressing the department's space requirements, design criteria, and adjacency requirements. The Feasibility Study is included in the DCM in Appendix K.

3. Project Description

a. The project consists of three fire and EMS stations ranging in age and building size, each with individual project scopes including interior renovations, bay replacement, and whole building demolition and new construction.

The three stations are:

1) AFD 1 / EMS 6 located at 401 East 5th Street: Constructed in 1938 as a two-story station of approximately 8,780 SF with three apparatus bays. A one-story annex of approximately 3,340 SF was built in the early 1960's, bringing the total area of AFD 1 / EMS 6 to approximately 12,120 SF.

This station will require renovations and repairs in two Phases.

a) Phase I - will be to modify the Annex to the extent that makes it livable and able to house one Engine crew and one Ambulance crew on the premises to respond from. Once the crews are temporarily moved into the Annex, any remediation and abatement will take place, and then the remodel of the First and Second floors of the 1938 building. All new wiring, plumbing, HVAC, windows, insulation and the addition of new partitions and re-structure of the interior layout occur during this phase.

b) Phase II - will require moving all the crews back to the renovated Phase I two-story Fire Station and remodeling the Annex. The Annex needs to provide space for the Commander's quarters, the EMS quarters and a classroom.

2) AFD 3 located at 201 West 30th Street: Constructed in 1956 as a one-story station of approximately 5,140 SF with two apparatus bays. The two apparatus bays are 2,294 SF.

   This station will require materials sampling and possible abatement and lead remediation prior to the demolition of the Existing Bays in their entirety and the construction of two New Bays to replace the existing ones.

3) AFD 22 / EMS 12 located at 5309 East Riverside Drive: Constructed in 1975 as a one-story station of approximately 4,270 SF with two apparatus bays. The EMS Station of approximately 1,180 SF was added in 1984 with an EMS apparatus bay of approximately 1,000 SF added in 1997. In 2016, approximately 472 SF was added to the Fire Station for a Women's Locker Room and a Telecom Room.

   This station will require materials sampling and possible abatement prior to the demolition of the Existing Fire and EMS Station in its entirety and the construction of a new two-story station with three apparatus bays, site work and parking. As the current direction and recommendation from the Lawrence Group is to completely demolish and rebuild, the City of Austin may discuss and choose to confirm or review this direction.

b. Hazardous Materials

1) The D-B will adhere to all City of Austin regulations regarding the disposal of any hazardous materials. Asbestos and Lead Reports for each of the three stations are included in Appendix H. A City of Austin rotation list consultant will be assigned to develop the abatement and recycling specifications, as well as conduct the monitoring for each of the three stations.

2) The D-B will be expected to subcontract the abatement/recycling work within the scope of this project. Any subcontractor must comply with all state regulatory requirements as well as the latest City of Austin regulations and approval process. The D-B may choose to utilize a subcontractor not currently on the City of Austin list; however, the subcontractor will have to comply with all procurement and state regulatory requirements in addition to the City of Austin approval process. Using a rotation list City of Austin Abatement/ Recycling subcontractor is highly advised due to the timeliness of the project.

4. Steps Following the Selection of the Design-Builder

a. The D-B's contract will be awarded following a two-step procedure using qualifications statements, request for additional information, and interviews. Step 1 will result in Owner qualifying (shortlisting) a maximum of five (5) Offerors to respond to Step 2. Step 2 will consist of a request for additional information and interviews.

b. Owner will submit a recommendation for Austin City Council to authorize negotiation and execution of a contract with the top-ranked firm. If Owner is unable to negotiate a satisfactory contract with the top ranked firm within 45 calendar days, the Owner will formally end negotiations with that Offeror. The Owner will then proceed to negotiate a satisfactory contract with the next Offeror in the order of the selection ranking, until a contract is reached or all negotiations end, provided that Owner, in its complete discretion, may elect to extend the time for negotiations with any Offeror for an additional period of time.

c. After award of contract is made, the successful Offeror will be required to enter into a contract in a form established by the Owner. The project Guaranteed Maximum Price (GMP) and partial GMPs, if applicable, are anticipated to be negotiated at the appropriate times during the project design, and those established milestones will be stipulated in the contract form. The entire content of the Offeror's submittal will become a part of the D-B's executed Contract Documents. Failure of the successful Offeror to accept this obligation may result in cancellation of any award. Any damages accruing to Owner as a result of the successful Offeror's failure to contract may be recovered from the selected Offeror.

d. City Manager or his designee will sign the Contract after award and execution of required Contract Documents by the selected Offeror. Contract will not be binding upon Owner until both parties have executed it. Owner will process the Contract expeditiously; however, Owner will not be liable for any delays prior to the award or execution of Contract.

5. Concept Collaboration

a. Prior to the beginning of the Schematic Design Process, the selected D-B's design team is expected to collaborate with City of Austin's Project Team to identify possible alternative solutions to these improvements. The Project Team will include staff from the Austin Fire Department, maintenance and

operations group, managed by the Public Works Department. D-B will be expected to collaborate as follows, but not limited to:

1) Examine key concepts that will be referred to throughout this DCM such as working together, partnership and collaboration.
2) Use a concept analysis framework to analyze and explore key concepts and outline their distinguishing features.
3) Understand the implications of effective working environments and how they are understood and operationalized by personnel of the various City of Austin departments and the general public.

b. The final solution should provide the best levels of service and operational efficiency and create a pleasant experience for the three fire and/or EMS stations.

6. General Project Locations

a. The map on the following page illustrates the location of each station within Austin.

NOTE: AFD 1 / EMS 6 and AFD 3 are within Council District 9. AFD 22 / EMS 12 is within Council District 3.

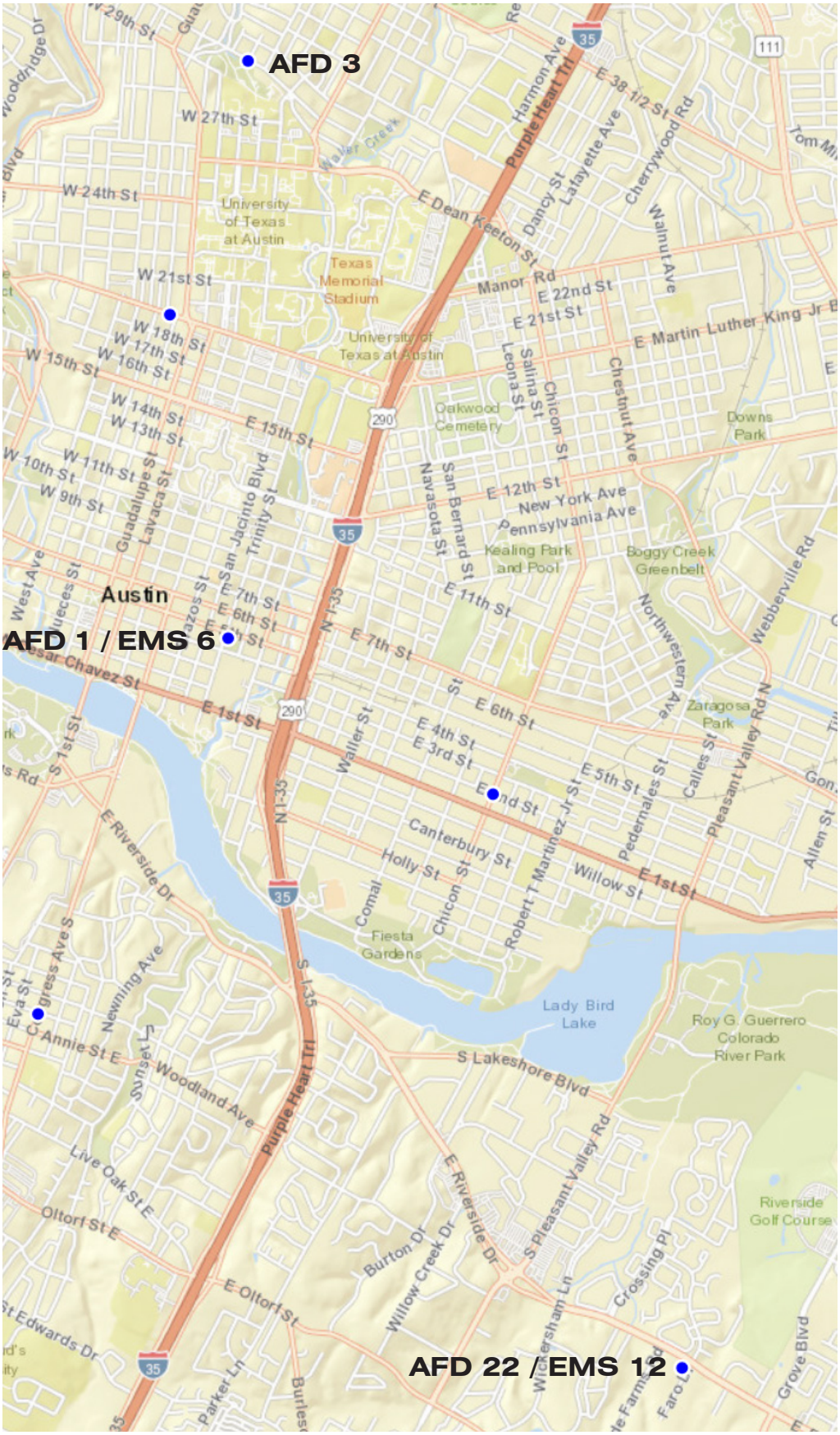
AFD 3
AFD 1 / EMS 6
AFD 22 / EMS 12
Austin
W 27th St
W 24th St
W 21st St
W 18th St
W 17th St
W 16th St
W 15th St
W 14th St
W 13th St
W 11th St
W 10th St
W 9th St
E 15th St
E 12th St
E 11th St
E 7th St
E 6th St
E 5th St
E 4th St
E 3rd St
E 1st St
E Dean Keeton St
E 22nd St
E 21st St
E Martin Luther King Jr
Manor Rd
University of Texas at Austin
Texas Memorial Stadium
Oakwood Cemetery
Downs Park
Kealing Park and Pool
Boggy Creek Greenbelt
Zaragosa Park
Fiesta Gardens
Lady Bird Lake
Roy G. Guerrero Colorado River Park
Riverside Golf Course
S Lakeshore Blvd
E Riverside Dr
Live Oak St E
Oltorf St E
E Oltorf St
St Edwards Dr
Purple Heart Trl
N I-35
S I-35
Harmon Ave
Lafayette Ave
Cherrywood Rd
Walnut Ave
Chestnut Ave
Chicon St
Salina St
Leona St
San Bernard St
Navasota St
New York Ave
Pennsylvania Ave
Northwestern Ave
Webberville Rd
Pleasant Valley Rd
Pedernales St
Calles St
Robert T Martinez Jr St
Willow St
Canterbury St
Holly St
Comal
Waller St
San Jacinto Blvd
Trinity St
Guadalupe St
Lavaca St
West Ave
Cesar Chavez St
S 1st St
Newning Ave
Woodland Ave
Sunset Ln
Burton Dr
Willow Creek Dr
Crossing Pl
Grove Blvd
Parker Ln
Burleson
Faro Dr
Allen St
Tom M
Walker Creek

2 | Approval

DESIGN CRITERIA MANUAL APPROVED BY:

6.04.2019

Alejandro Wolniewitz, Facilities Planning Manager
Austin Fire Department, Facilities Office
City of Austin

Date

6/11/19

Gadiel Arellano, Project Coordinator
Austin-Travis Emergency Medical Services, EDWD
City of Austin

Date

6-4-19

Robert Menchaca, Financial Manager
Austin Fire Department, Fire Administration
City of Austin

Date

6-10-19

Brandon L. Wade, Assistant Chief
Austin Fire Department
City of Austin

Date

6/10/19

Michelle Noriega, AIA, Project Manager
Public Works Department, Office of the City Architect
City of Austin

Date

3 | Design Criteria Manual Contributors

Austin Fire Department, City of Austin

Alejandro Wolniewitz – Facilities Planning Manager
Robert Menchaca – Financial Manager
Brandon L. Wade – Assistant Chief

Austin-Travis Emergency Medical Services, City of Austin

Gadiel Arellano - Project Coordinator

Public Works Department, City of Austin

Janice White, AIA - City Architect
Michelle Noriega, AIA - Project Manager

Capital Contracting Office, City of Austin

LaVonia Horne-Williams – Procurement Specialist IV

Human Resources Department, City of Austin

Anthony Pleasant – ROCIP Safety Consultant

Lawrence Group Architects

I. Earl Swisher, AIA - Principal
Karen Renick - Project Manager
Nick Faust, Assoc. AIA - Designer

Jose I. Guerra, Inc.

Shawn Allen, P.E. - V.P., Director of Operations
Debra Sharpe, RA - Senior Project Manager
Steven Jalnos, EIT - Mechanical Design Engineer
Colby Brock, P.E. - Senior Electrical Project Engineer
Brandon Reyes, P.E. - Fire Protection & Mechanical Project Engineer

Stansberry Engineering, CO.

Blayne Stansberry, P.E. - Principal

Kings Struarchural, Inc.

Patrick Asiedu, P.E. - Principal

Sunland Group

Jon Brady - V.P. Project Management & Controls
Stuart Hoevelman, CPE - Chief Estimator

4 | Space/Adjacency Analysis & Requirements

A. Design Strategies

1. All Stations

a. Each new and renovated station shall be designed to effectively serve Fire Department and EMS personnel during emergency calls and during non-emergency operations. These non-emergency operations include training, station maintenance, apparatus cleaning, administrative work and physical fitness. In addition, the common areas of the station provide space for social interaction and gathering among the station personnel and their families. When an emergency call is received, it is critical for personnel to exit the station as quickly as possible and leave the station secure because it is often left unoccupied.

b. When firefighters return from the emergency operations, the soot and smoke residue on their uniforms are viewed as contaminants, therefore, another critical aspect of the station design includes separating contaminated spaces from non-contaminated spaces. AFD refers to the contaminated spaces as the hot zone and the non-contaminated spaces as the cold zone. The hot zone shall be separated from the cold zone using a pressurized system. There is also a warm zone that may contain contaminants, but does not require the level of separation that is required by the hot zone.

c. It is also important to maintain separation between loud, shared spaces and quiet, private spaces. Each station operates on a 24-hour, three-shift schedule, and several different activities can take place in the station at any given time of day or night. For this reason, it is essential for the private spaces, like sleeping rooms, to be physically and acoustically separate from the louder shared spaces, like the day room or exercise room.

2. AFD 22 / EMS 12 (Only)

a. The Owner has developed station prototype plans for a 2-story 3-bay station for the new AFD 22 / EMS 12, as well as preliminary programming and program analysis documents. The prototype plans for AFD 22 / EMS 12 are included in Chapter 7 - Proposed Conceptual Projects and the programming documents are in Appendix E. The plans and program documents are provided as a reference and starting point for the D-B team and are not intended to be directive or to influence design or creativity. The D-B shall discuss these requirements and all program elements with the Owner during the design phase.

B. Special Requirements

1. **AFD 1 / EMS 6**
   a. None
2. **AFD 3**
   a. None
3. **AFD 22 / EMS 12**
   a. The following requirements have been outlined by the Owner and shall be included by the D-B in the scope of work. Some of these requirements may not be included in the prototype program, however, all shall be incorporated into the project scope and discussed with the Owner during the design phase.
      1) All newly constructed stations shall include an automatic wet-pipe fire sprinkler system. During the design phase, the existing water flow shall be evaluated by the D-B to determine if sufficient flow is available for the sprinkler system.
      2) All newly constructed stations shall be planned to include a fuel station for AFD and other City owned vehicles. For a description of Fuel Stations, refer to Chapter 5 - Site Analysis under AFD 22 / EMS 12 / D. Site Development Requirements / 3. Other Items. Sample fuel station design drawings are included in Appendix J.

5 | Site Analysis AFD 1 / EMS 6, AFD 3, & AFD 22 / EMS 12

A. Project Area Map

Address: 401 E. 5th St., Austin 78701

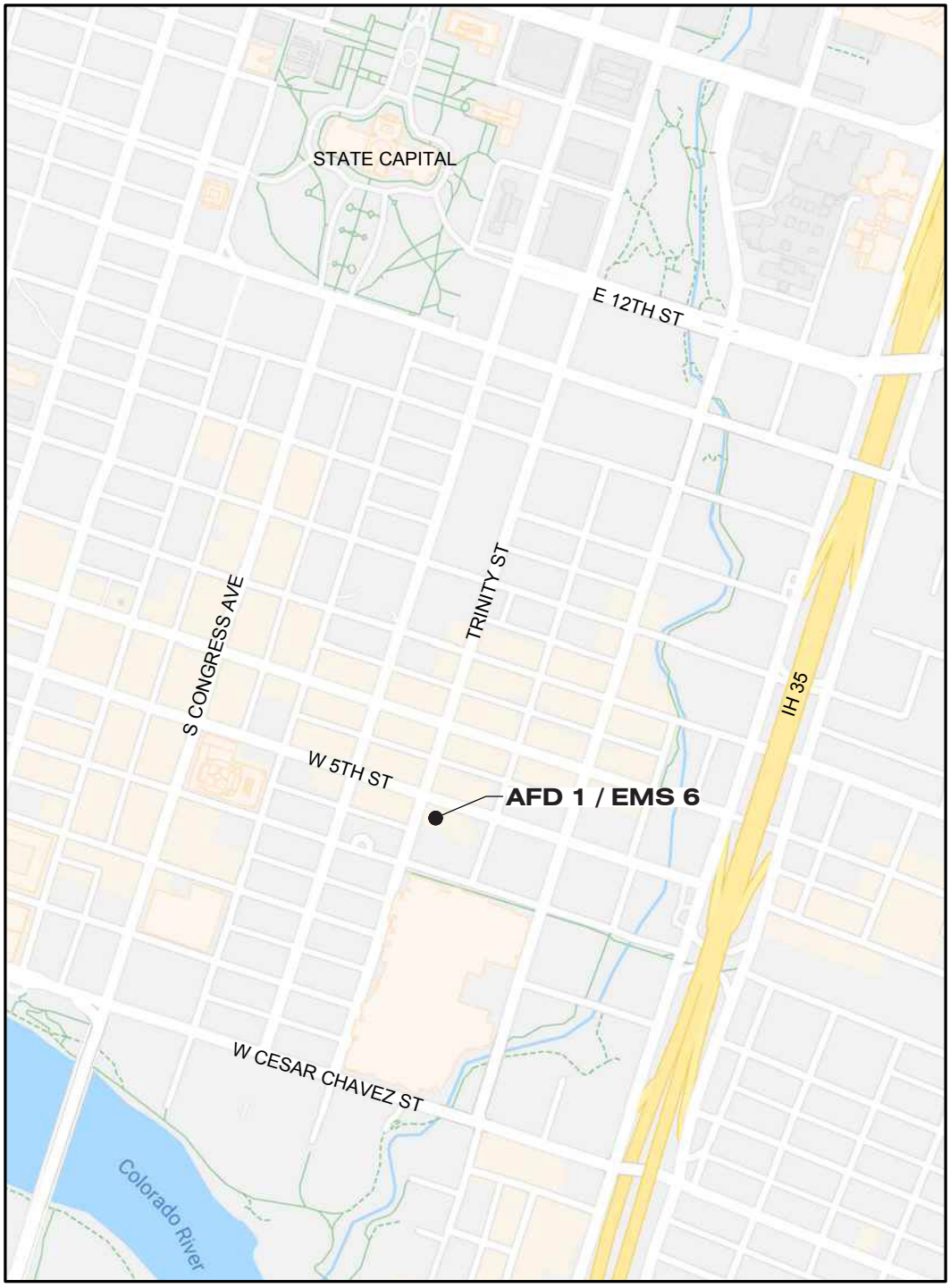

N

AFD 1 / EMS 6
PROJECT SITE LOCATION MAP

B. Summary Description

1. Description

a. The site is situated at the southeast corner of the intersection of West 5th Street and Trinity Street in downtown Austin with convenient access to Interstate Highway 35. The fire station apparatus bay accesses directly on Trinity St. while the Emergency Medical Service uses the 5th St. apparatus bay. Both streets are one-way.

b. General site information:

1) Legal Description: 276 X 276' Brush Square (Old O'Henry School Tract)

2) Travis County Property ID 191564

3) Market Value $19,272,528

c. The gross site area is 1.75 acres. The existing impervious cover is estimated at approximately 45 percent.

d. The proposed scope of improvements includes the following items that will impact the site:

1) Extensive interior renovation including utility upgrades

2) Addition of elevator and exterior stair

3) Site accessibility improvements

2. Additional Site Requirements

a. The Owner has identified no additional items to be included in the scope of the improvements.

b. The design, permitting, and construction of the site improvements described above shall be performed in accordance with the City of Austin's Land Development Code, Technical Criteria Manuals, Standards, and Specifications. The City of Austin's regulatory requirements include but are not limited to the following:

1) Building constraints as established by zoning, subdivision, restrictive covenants, and development regulations;

2) Water, fire protection, and wastewater service requirements;

3) Floodplain and creek setbacks;

4) Environmental regulations including tree protection and required landscaping; and

5) Subdivision plats and/or other restrictive covenants.

C. Existing Site Surveys & Analysis

1. Record Site Survey

a. There are no site record drawings or previous site permits issued for this project.

b. A topographic and improvement survey of the O'Henry Museum site, which includes the fire station, was provided by the Owner and is included in Appendix A. The survey is dated September 12, 2018. The survey for AFD 1 / EMS 6 may require some additional survey of the existing utilities in the street to verify flowlines.

c. The D-B shall procure a site survey of each station site during the design phase; surveys shall include, but shall not be limited to:

1) Property lines;

2) Building setbacks lines established by subdivision plat, zoning, or restrictive covenant;

3) Easements;

4) Zoning of the property and adjacent parcels;

5) Existing structures

6) Locations of existing underground utility lines on and adjacent to the property based on available record maps and records obtained from the utility service providers including dry utilities (gas, electric, and communications);

7) Actual field-surveyed locations and depths (determined by pot-holing) of the underground utility lines that may be impacted by the proposed improvements;

8) Visible utilities and other site facilities and amenities;

9) Tree locations, sizes, species and critical root zones as defined by the Austin City Code; and

10) Topographic information including building floor elevations; spot elevations of hard surfaces such as curbs, sidewalks, courtyards, driveways, and ramps; and flow line elevations of wastewater and storm drain facilities.

2. Deeds, Legal Restrictions, and/or Lease Agreements

a. The Lease Agreement for AFD 1 / EMS 6 is included in Appendix A.

b. Legal restrictions were not discovered at time of publication, but can be confirmed through the City of Austin Office of Real Estate.

c. The State of Texas grants the use of the property by the City of Austin as authorized by S.B. No.1023 of the 83rd legislative session.

3. Utilities, Meters and Service Lines

a. The existing water service to the building is located on the north side. There is no record of the existing water tap on file with City. The existing meter is 1½ inch, # 202298.

b. The existing wastewater service to the building is located on the north side. According to City tap records, the existing wastewater service is 4 in diameter and located 63 feet east of the Trinity street curb line. It is approximately 5 feet deep.

c. Tap records are provided in Appendix A.

d. The building does not contain a fire suppression system. The DB shall request hydrant flow tests to determine if fire flow meets fire protection requirements.

e. A new grease interceptor is proposed.

f. Gas service to the building is located on the north side of the building.

g. The electric service and meter enters the building on the south side.

4. Stormwater and Drainage

a. No drainage concerns.

5. Driveways & Parking

a. There are approximately 23 parking spaces located within a secure fenced area. The number of spaces is adequate for the station staff. The existing concrete pavement for the trucks is generally in good shape and is flush with the truck bay entrance. However, there are cracks at corners of pavement sections in need of repair (Fig. 1 & 2).

6. Circulation and Access

a. A fire truck returning to the station blocks the street as it reverses into the main the driveway. In addition, the fire truck blocks the public sidewalk along the street when parked outside the truck bay (Fig. 3 & 4).

b. The existing building entrance door on the north side of the building is designated as accessible. However, there is no accessible parking or route from the public sidewalk to the designated door (Fig. 5).

7. Site Amenities

a. There are trees located on the site, including memorial trees.

Fig. 1 - Existing parking lot at south side of building.

Fig. 2 - South building entrance (non-accessible entrance and parking).

Fig. 3 - West side truck bay entrance.

Fig. 4 - Truck parking in front of bay.

b. The existing roof is used as the main outdoor amenity space. No shade cover or vegetation is provided.

c. A smaller rooftop patio accessed from the stairwell is available. It is shaded by an existing tree.

8. Exterior Signs (Wayfinding & Advertising)

a. Unless required by the Owner at a specific station, new exterior signs and wayfinding are not required except as follows:

1) D-B shall protect existing street address or provide new street address if missing. The text color shall contrast the background color.

2) D-B shall protect existing or provide new "Safe Baby Site" sign near the publicly accessible entrance to the building. The text shall be in Spanish and English.

3) D-B shall protect existing miscellaneous signs at each station such as informational signage and memorial plaques.

9. Site Information

a. Information collected from City of Austin GIS data about the zoning, topography and storm drainage, water, and wastewater facilities for the site is provided on the following four maps.

Fig. 5 - North entrance (non-accessible)

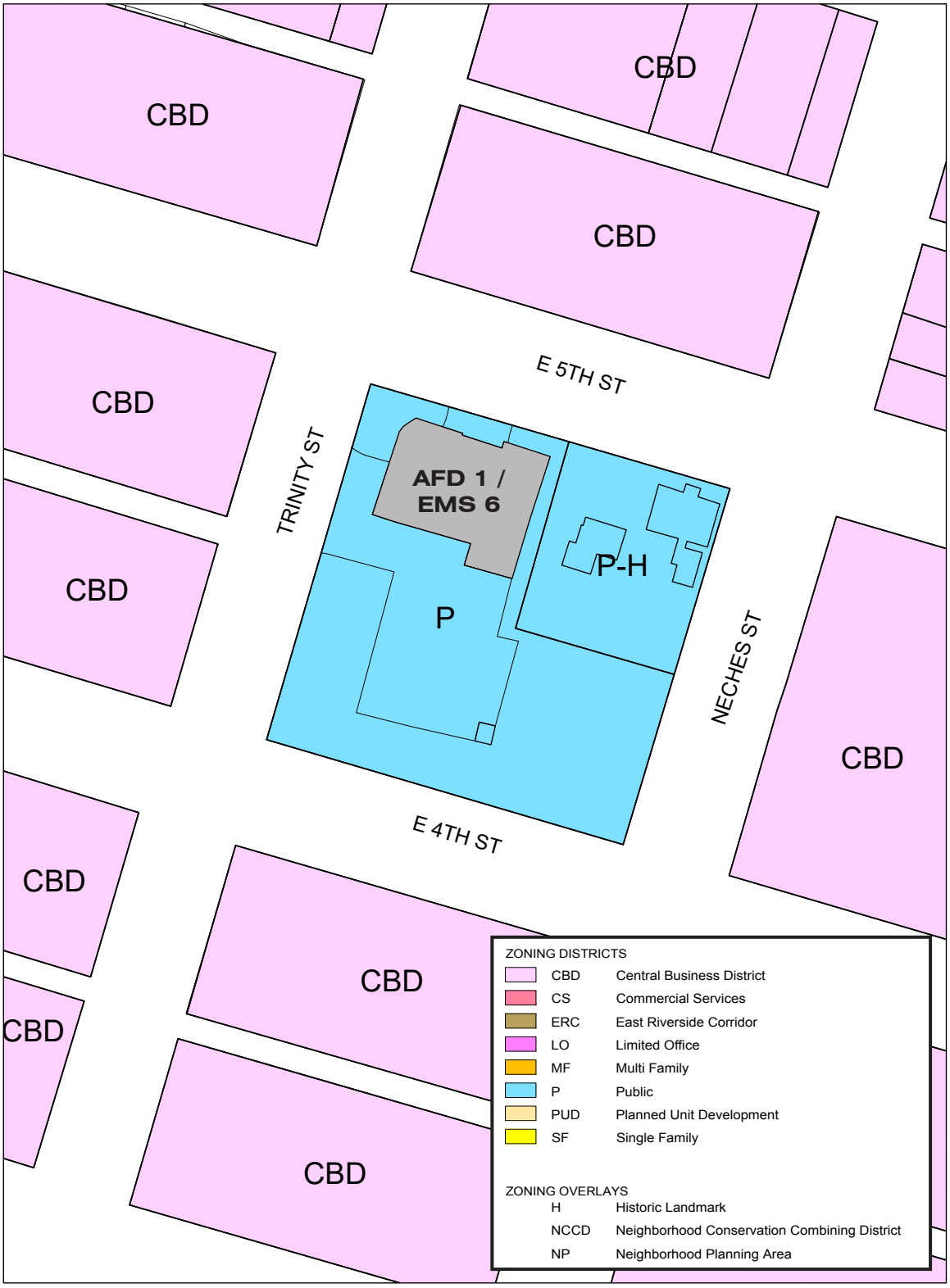

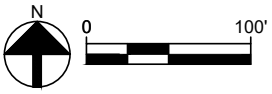

AFD 1 / EMS 6
ZONING MAP

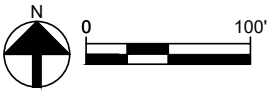

AFD 1 / EMS 6
TOPOGRAPHIC & STORM DRAIN MAP

N 0 100'

AFD 1 / EMS 6
WATER INFRASTRUCTURE

N 0 100'

AFD 1 / EMS 6
WASTEWATER INFRASTRUCTURE

D. Site Development Requirements

1. Community Involvement

a. The community surrounding each station shall be engaged during the design process. The D-B shall work with the Owner to develop a suitable community engagement process and shall implement community engagement at stages appropriate to the project's development. Community engagement may involve community meetings, information distribution, and outreach. The D-B team shall allow for two community meetings per station and shall prepare presentation boards for these meetings.

2. General Development Considerations

a. Code Regulations

1) Each station site is owned by the City of Austin. Station site improvements shall meet all City of Austin development requirements, specific neighborhood development requirements, and requirements of the Texas Accessibility Standards and the Americans with Disabilities Act.

b. Zoning Regulations

1) Zoning

a) The site is zoned P and P-H which is the Public district with a Historic overlay. The historic designation is on the O'Henry museum, but excludes the fire station.

b) In P zoning, the regulations such as setbacks and impervious cover restrictions are typically set with the site plan submittal and Planning Commission approval of the site plan. These regulations typically mimic surrounding areas for sites that are less than 1 acre.

c) The site is within Downtown Planning Area. The Plan's vision for Downtown Austin is development that supports a vibrant day and nighttime environment, an interconnected pattern of streets, parks, and public spaces, multi-modal transportation system that is a viable alternative to the automobile, historic places, buildings, and landscapes that celebrate Austin, destinations that support creative expressions, a large trail system, a wide range of housing choices, and an array of innovative businesses.

2) Building Setbacks

a) Front Yard Setback 0 feet

b) Street Side Yard Setback 0 feet

c) Side Yard Setback 0 feet

d) Rear Yard Setback 0 feet

3) Building Frontage Lines

a) The site sits at the southeast corner of the intersection of W. 5th St. and Trinity St.

4) Height Restrictions

a) Maximum Height n/a

b) Building Floor to Site Area Ratio 8:1

5) Maximum Impervious Cover 100%

c. Watershed Regulations

1) The site is within the Waller Creek watershed which is classified as an urban watershed. The site is not over the Edwards Aquifer Recharge Zone, Contributing Zone, nor subject to an Erosion Hazard Review.

d. Floodplain Regulations

1) The site is not within a FEMA or City of Austin defined floodplain boundary.

e. Permitting Requirements

1) An exemption to the Site Plan Permit will be required for the elevator and ADA accessibility.

f. Noise Exposure

1) Exposure to ambient noise and light from inside and outside the stations can be disruptive to the firefighters during sleep. Blackout shades shall be included in the design scope for all sleeping rooms to minimize the disruption from exterior ambient light. Insulation and insulating windows will help reduce noise transmission from the exterior, and acoustic insulation at all sleeping rooms will help reduce noise transmission from inside the station. These design strategies shall be included in the scope for all stations.

g. Security

1) Each newly constructed and renovated station shall be provided with security card readers at the entry door closest to the staff parking lot and at the door to the communications room. Secure fencing with sliding vehicular access gates and pedestrian access gate shall be provided around employee parking areas.

h. Vehicular and Pedestrian Facilities

1) The design of the vehicular and pedestrian facilities for each station shall conform to the City of Austin's Transportation Criteria Manual,

Environmental Criteria Manual, and Standard Specifications for construction. The location and design of driveway approaches and internal circulation driveways shall meet the requirements of AFD's fire apparatus equipment. The Owner will provide information on fire apparatus equipment during the design phase. Driveway horizontal and vertical alignments shall be designed to provide onsite turnaround capability and sufficient clearances such that the underside of vehicles does not drag on the driveway surface or cause the vehicles to high-center. AFD prefers drive-through bays for the proposed fire stations; internal circulation drives shall be designed to achieve this goal.

2) Where possible for existing station renovations, full size parking spaces shall be provided for each station in the following minimum amounts:

   a) Secured staff parking requires a minimum of 26 full size spaces

   b) Visitor parking outside the secured fence a minimum of 3 full size spaces

   c) One space shall be designated as an electric vehicle charging station and shall be coordinated with Austin Energy

3) Accessible parking spaces shall be provided for each area in conformance with adopted standards. The design of sidewalks shall conform to the City's regulations and construction specifications and all accessibility standards. The scope of the sidewalks shall include the frontages of the fire and/or EMS station property along public streets and an accessible sidewalk from the public street to the entrance of the building in accordance with the City's requirements.

i. Public Access

1) Citizens may use the public sidewalks to approach the entrance to the station which are generally in good condition. However, an accessible route is not provided as noted in Section C.7.

3. Other Items

a. None

A. Project Area Map

Address: 201 W. 30th St. Austin, 78705

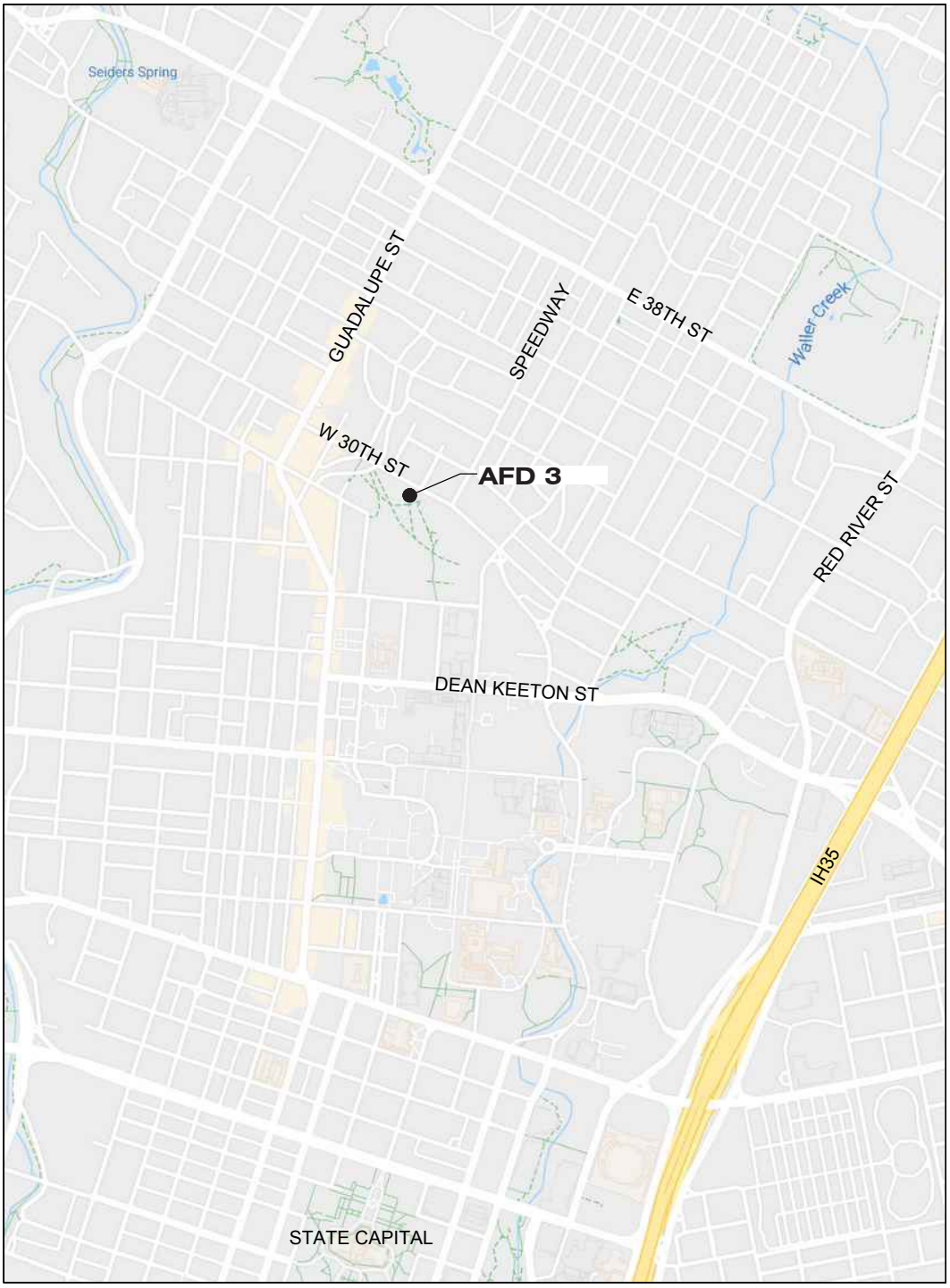

N

AFD 3
PROJECT SITE LOCATION MAP

B. Summary Description

1. Description

a. The site fronts on W. 30th St. which is the only street access. Hemphill Branch, a tributary of Waller Creek, runs along the rear of the building. The building was constructed in the 1950's.

b. General site information:

1) Legal Description: All of Block 4, alley and adjacent west 25 feet of street, Fruth Addition to the City of Austin Outlot 73, Division D

2) Travis County Property ID: 210509

3) Market Value: $6,237,000

c. The gross site area is 2.86 acres. This includes the adjacent Adams - Hemphill Park. The existing impervious cover is estimated at 14 percent of the gross site area.

d. The proposed scope of improvements includes the following items that will impact the site:

1) Demolishing and rebuilding the existing truck bays.

2) Site accessibility improvements

3) Expansion of truck bays was reviewed but determined unfeasible due to existing floodplain and property setbacks

2. Additional Site Requirements

a. The Owner has identified no additional items to be included in the scope of the improvements.

b. The design, permitting, and construction of the site improvements described above shall be performed in accordance with the City of Austin's Land Development Code, Technical Criteria Manuals, Standards, and Specifications. The City of Austin's regulatory requirements include, but are not limited to, the following:

1) Building constraints as established by zoning, subdivision, restrictive covenants, and development regulations;

2) Water, fire protection, and wastewater service requirements;

3) Floodplain and creek setbacks;

4) Environmental regulations including tree protection and required landscaping; and

5) Subdivision plats and/or other restrictive covenants.

C. Existing Site Surveys and Analysis

1. Record Site Survey

a. There are no site record drawings or previous site permits issued for this project.

b. A topographic and improvement survey of the site was provided by the Owner and is included in Appendix A. The survey is dated November 14, 2018. Additional survey of utility flowlines may be required.

c. The D-B shall procure a site survey of each station site during the design phase; surveys shall include, but shall not be limited to:

1) Property lines;

2) Building setbacks lines established by subdivision plat, zoning, or restrictive covenant;

3) Easements;

4) Zoning of the property and adjacent parcels;

5) Existing structures

6) Locations of existing underground utility lines on and adjacent to the property based on available record maps and records obtained from the utility service providers including dry utilities (gas, electric, and communications);

7) Actual field-surveyed locations and depths (determined by pot-holing) of the underground utility lines that may be impacted by the proposed improvements;

8) Visible utilities and other site facilities and amenities;

9) Tree locations, sizes, species and critical root zones as defined by the Austin City Code; and

10) Topographic information including building floor elevations; spot elevations of hard surfaces such as curbs, sidewalks, courtyards, driveways, and ramps; and flow line elevations of wastewater and storm drain facilities.

c. The site survey provided by the Owner determined the building finished floor elevation is approximately 562.0 feet.

d. The water surface elevation of the 100 year floodplain is approximately 559.3 feet based on the NOAA Atlas 14 study in 2018. This elevation was determined by the 500 year water surface elevation from Profile 296P of the FEMA Flood Insurance Study for Hemphill Branch which is provided in Appendix A. At the time

of this report, the City has proposed adoption of the current 500 year floodplain as the interim 100 year regulatory floodplain until the FEMA floodplain maps are revised with the Atlas 14 updates. Likewise, the current 100 year floodplain is proposed as the interim 25 year floodplain. The site map included under item "9. Site Information" below shows the approximate interim 25 year and 100 year floodplains which will become the new floodplains recommended by the Atlas 14 study.

e. For a more extensive explanation of the floodplain issue at AFD 3, please refer to item "d. Floodplain Regulations" under "General Development Considerations" in section "D. Site Development Requirements" in this chapter.

2. Deeds, Legal Restrictions, and/or Lease Agreements

a. A deed conveying the property to the City of Austin is recorded in Volume 434 Page 257 and attached in Appendix A.

b. Legal restrictions were not discovered at time of publication, but can be confirmed through the City of Austin Office of Real Estate.

3. Utility Meters and Service Lines

a. The existing water service is located on the north side of the building.

1) According to City tap records, the water service is 42 feet east of the Whitis Avenue Right of Way. It is 1½ inch diameter copper service line located approximately 3 feet deep. The existing meter is 1½ inch, # 87496.

b. The existing wastewater service is located on the north side of the building.

1) The existing wastewater service is a 6" diameter line and was constructed in 1956. It is located 37 feet south of the north property line. The service line connects to a 15 inch PVC main installed in 1977.

c. Tap records are provided in Appendix A.

d. The building does not contain a fire suppression system. The DB shall request hydrant flow tests to determine if fire flow meets fire protection requirements.

e. A new oil interceptor is proposed.

f. Gas service is located on east side of building.

g. The electric service and meter enters the building from the rear.

h. Rear HVAC unit is located within the floodplain and subject to possible inundation (Fig. 1).

4. Stormwater and Drainage

a. There are no areas of ponding or nuisance water.

b. The roof drains from the rear of the building are piped away from the building and discharge near the creek.

c. There is an area of washout under the rear stairs entering the building (Fig. 2).

5. Driveways & Parking

a. The truck bay driveway has shifted approximately 2 to 3 inches below the bay and shows significant cracking due to the truck loads.

b. There are approximately 11 parking spaces located within a secure fenced area set up in a tandem configuration (Fig. 3). Parking is only minimally sufficient for a single shift. Parking is insufficient at shift changes.

c. There are approximately 7 on street spaces. These spaces are used by the public on a first come first serve basis, specifically university students (Fig. 4). The D-B shall determine if these spaces can be reserved for Fire Department use.

d. The existing concrete pavement for the trucks is generally is good shape. There are cracks at corners of pavement sections in need of repair.

6. Circulation and Access

a. Accessible parking and route to the building entrance is not provided (Fig. 5).

b. A fire truck returning to the station blocks the street as it reverses into the main the driveway. In addition, the fire truck blocks the public sidewalk along the street when parked outside the truck bay (Fig. 6).

7. Site Amenities

a. Existing flag pole is located outside of the fire station property boundary and within the public access right of way (Fig. 7)

b. No outside patio area is provided.

Fig. 1 - HVAC equipment within floodplain.

Fig. 2 - Erosion under stair to rear entrance.

Fig. 3 - Tandem parking (4 spaces).

Fig. 4 - Street public parking.

8. Exterior Signs (Wayfinding & Advertising)

a. Unless required by the Owner at a specific station, new exterior signs and wayfinding are not required except as follows:

1) D-B shall protect existing street address or provide new street address if missing. The text color shall contrast the background color.

2) D-B shall protect existing or provide new "Safe Baby Site" sign near the publicly accessible entrance to the building. The text shall be in Spanish and English.

3) D-B shall protect existing miscellaneous signs at each station such as informational signage and memorial plaques.

9. Site Information

a. Information collected from City of Austin GIS data about the zoning, topography and drainage, water, and wastewater facilities for the site is provided on the following four maps.

Fig. 5 - Main entrance (non-accessible parking and entrance).

Fig. 6 - Fire Station vehicles block public sidewalk (non-accessible route to main entrance).

Fig. 7 - Pedestrian access to bridge.

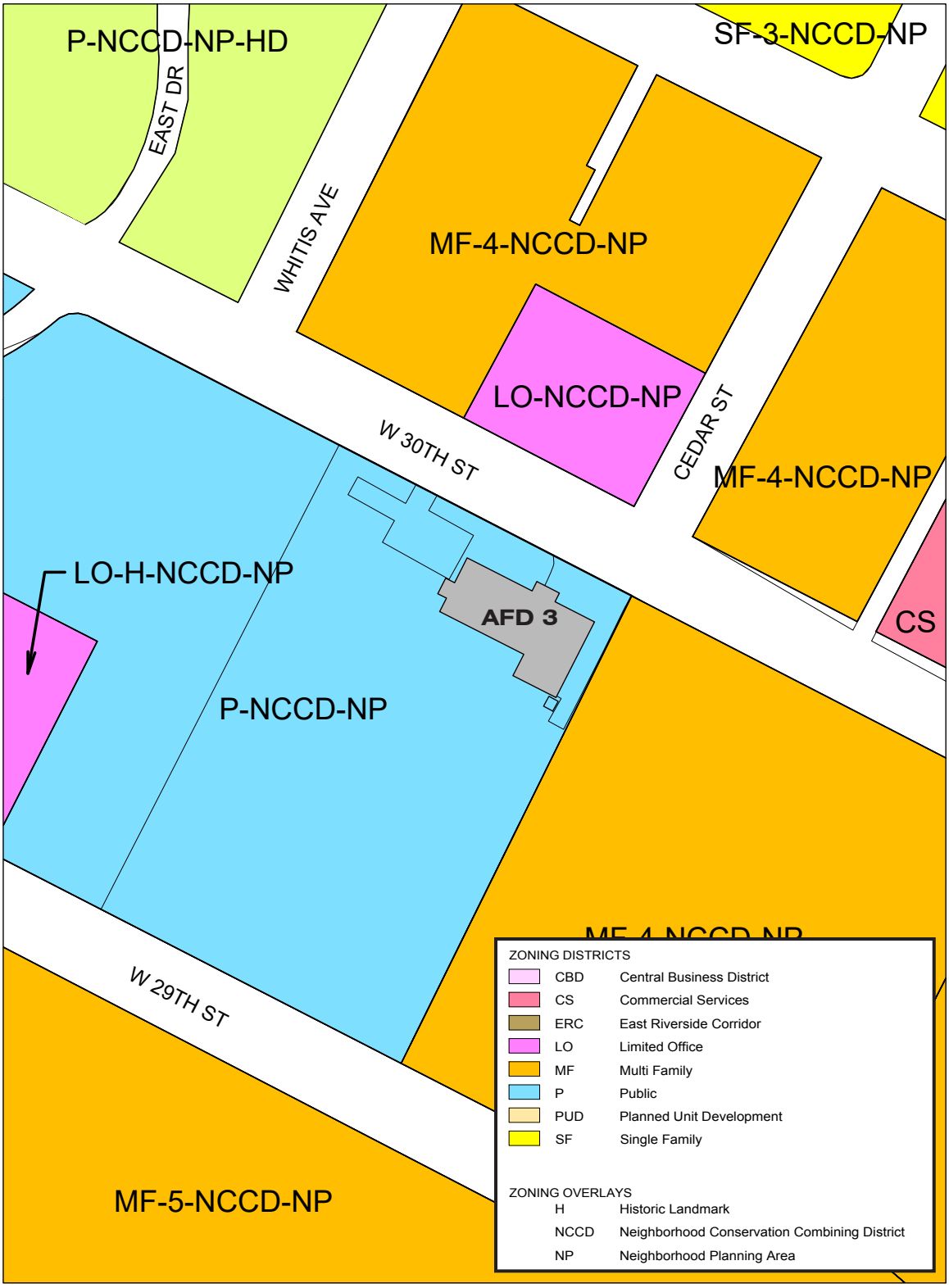

N 0 100'

AFD 3
ZONING MAP

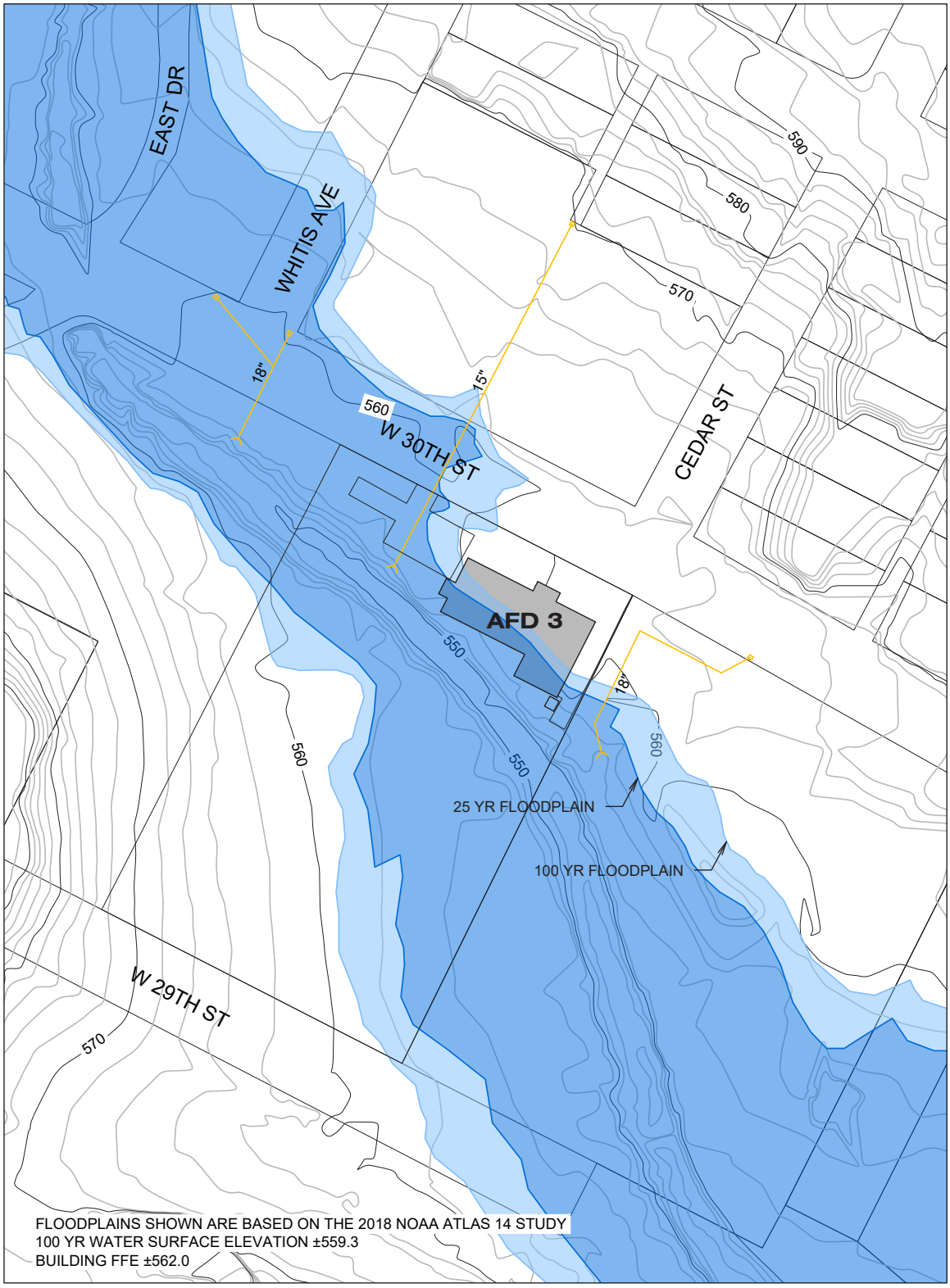

AFD 3
TOPOGRAPHIC & STORM DRAIN MAP

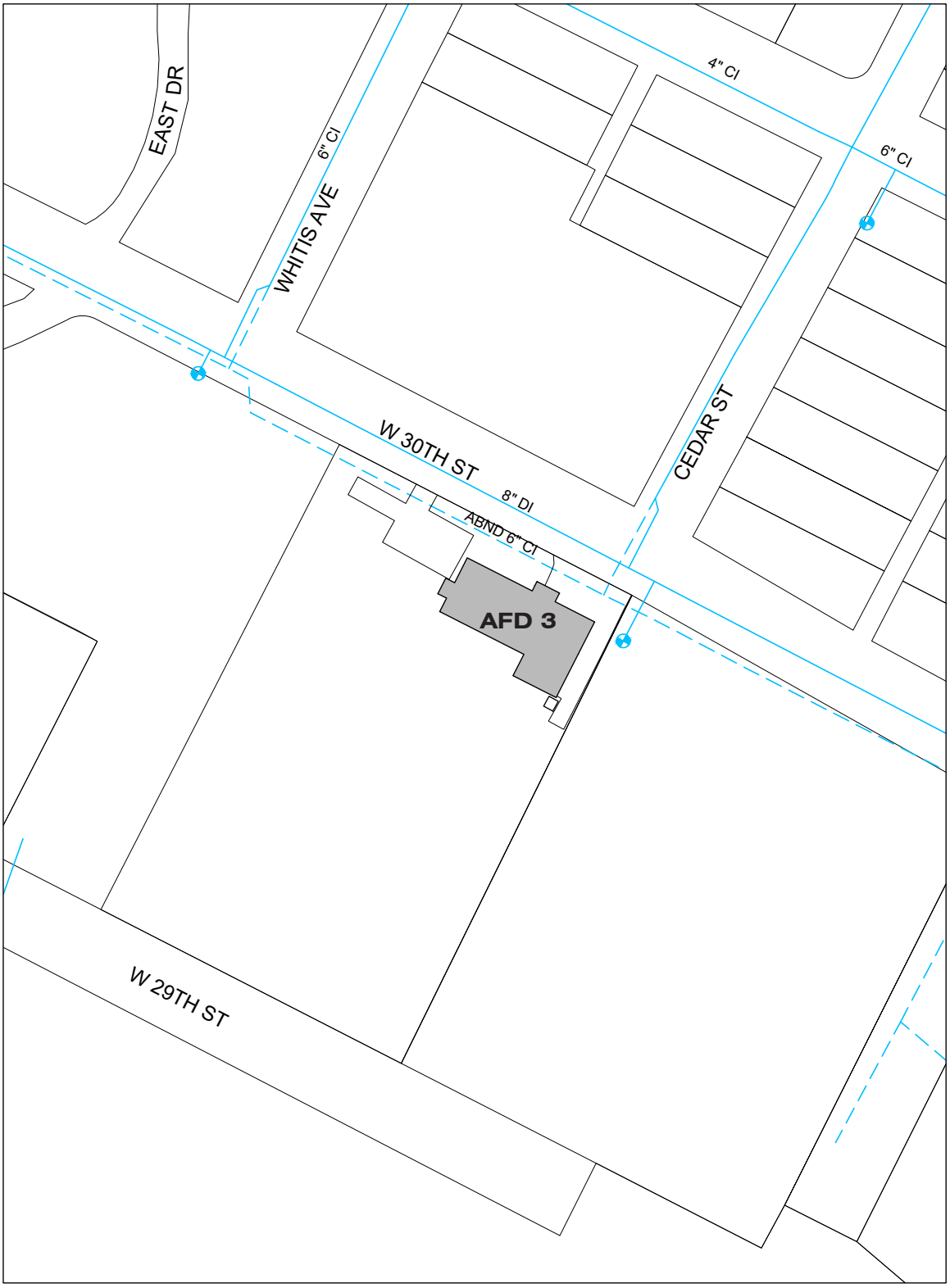

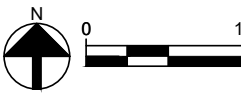

AFD 3
WATER INFRASTRUCTURE

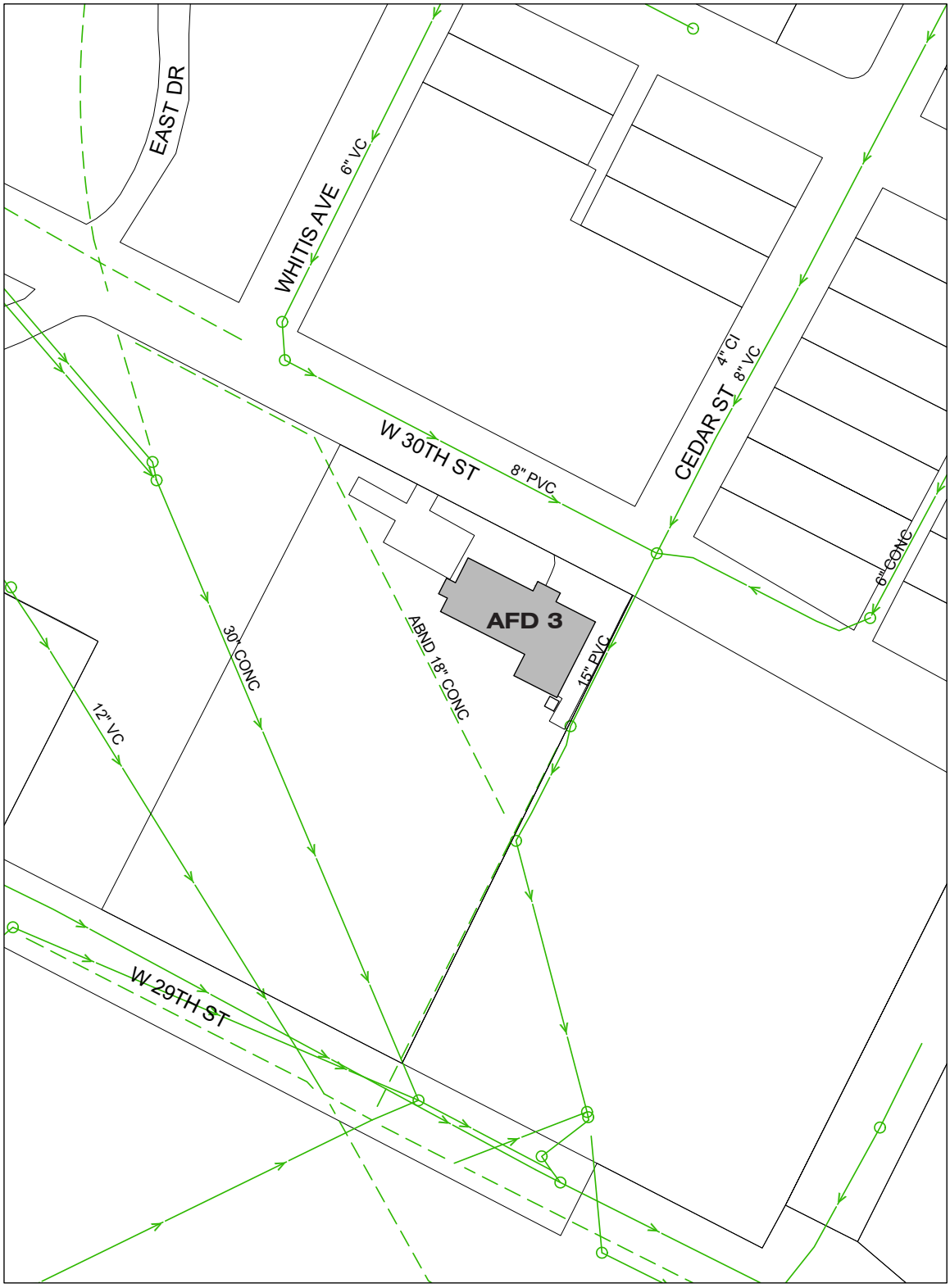

N 0 100'

AFD 3
WASTEWATER INFRASTRUCTURE

D. Site Development Requirements

1. Community Involvement

a. The community surrounding each station shall be engaged during the design process. The D-B shall work with the Owner to develop a suitable community engagement process and shall implement community engagement at stages appropriate to the project's development. Community engagement may involve community meetings, information distribution, and outreach. The D-B team shall allow for two community meetings per station and shall prepare presentation boards for these meetings.

2. General Development Considerations

a. Code Regulations

1) Each station site is owned by the City of Austin. Station site improvements shall meet all City of Austin development requirements, specific neighborhood development requirements, and requirements of the Texas Accessibility Standards and the Americans with Disabilities Act.

b. Zoning Regulations

1) Zoning

a) The site is zoned P-NCCD-NP which is the Public district with Neighborhood Conservation Combining District and Neighborhood Planning Area Overlays.

b) In P zoning, the regulations such as setbacks and impervious cover restrictions are typically set with the site plan submittal and Planning Commission approval of the site plan. These regulations typically mimic surrounding areas for sites that are less than 1 acre.

c) The Neighborhood Conservation Combining District ordinance zoned the tract to P from having no previous zoning designation. Refer to ordinance 040826-58. The NCCD generally modifies the regulations of the base zoning districts to reflect the Neighborhood Plan.

d) The site is within North University area of the Central Austin Combined Neighborhood Planning Area. The site is within Adams Park District 3 of the Neighborhood Plan. The purpose of the neighborhood plan is to preserve the historical character and integrity of single-family neighborhoods, allow mixed use development along existing commercial corridors, create a pedestrian oriented

community, provide safe multi-modal transit opportunities, and preserve open space.

e) The allowable uses defined for District 3 do not permit "Safety Services." However, the station is an existing land use and therefore considered a legal non conforming use.

f) The surrounding zoning is LO, MF-3, ad MF-4. The anticipated zoning regulations are outlined below.

2) Building Setbacks

a) Front Yard Setback	15 to 25 feet
b) Street Side Yard Setback	n/a
c) Side Yard Setback	5 feet
d) Rear Yard Setback	10 feet

3) Building Frontage Lines

a) The front property line fronts on West 30th St. which is the only street frontage for the site. The building entrance and truck bay face the street. The creek creates a western and rear boundary. A public access easement is located on the east side of the property for the public to access a pedestrian bridge crossing the creek to Hemphill Park.

4) Height Restrictions

a) Maximum Height	40 feet
b) Building Floor to Site Area Ratio	0.75:1

5) Maximum Impervious Cover	70% to 80%

c. Watershed Regulations

1) The site located on the Hemphill Branch of Waller Creek which is classified as an urban watershed. The site is not over the Edwards Aquifer Recharge Zone or Contributing Zone. New construction is subject to an Erosion Hazard Review due to proximity to the creek.

d. Floodplain Regulations

1) The water surface elevations of the 25 year and 100 year floodplains are increasing per a NOAA Atlas 14 study in 2018. Although it will take several years to revise the FEMA maps, the City will adopt the FEMA 500-year floodplain as the regulatory 100 year floodplain. City staff expects the adoption to be approved by City Council early 2019. The current 100 year floodplain will be the interim 25 year floodplain and the current 500 year floodplain will be the interim 100 year floodplain.

2) The building was constructed in the 1950's prior to the City's floodplain regulations. The southern portion of building is within the 25 and 100 year floodplains as shown on the topographic map in section C.3. The map shows the interim 25 and 100 year floodplains based on the Atlas 14 study in 2018.
3) The surveyed finished floor elevation of approximately 562 feet is approximately 2.7 feet above the water surface elevation of the 100 year floodplain of approximately 559.3 feet based on the NOAA Atlas 14 study in 2018.
4) FEMA and general floodplain management practice considers a building in the floodplain if the lowest adjacent grade around a building is below the base flood elevation. Although the finished floor is above the base flood elevation, flood waters touch the foundation and therefore, building is considered to encroach into the floodplain.
5) Two criteria govern building improvements within a floodplain.
    a) Substantial Improvement
        (1) Renovations and repairs can be made to a structure located in a floodplain if the total cost of the renovations and repairs is less than fifty percent of the market value of the structure. Refer to amended definition of Section 202.1 in §25-12-3, Local Amendments to the Building Code.
        (2) When the cost of repair and renovation exceeds fifty percent, a floodplain variance is required. As part of the variance, the entire building will need to be made compliant with the floodplain regulations. This includes the building finished floor elevation being 1 foot above the 100 year water surface elevation and a safe access path from the building to an area outside of the floodplain that is one foot above the water surface elevation. Also, City staff is pursuing a code change to require 2 foot of freeboard above the 100 year water surface elevation. This code change may happen concurrently with the adoption of the current FEMA 500-year floodplain becoming the regulatory floodplain.
        (3) The fire station meets or exceeds these compliance requirements of item (2) above. Therefore, substantial improvement

of costs exceeding 50 percent of the building market value of the structure will be allowed.

b) Non Conformity

(1) Building improvements that increase non-conformity of the City of Austin floodplain regulations by additional encroachment into the floodplain or other impact are prohibited without a variance.

(2) An expanded footprint is considered new construction and requires a floodplain variance. Two foot of freeboard above the 100 year water surface elevation and safe access will be required.

6) Building Expansions

a) Building expansion is treated as new construction and the expansion must be two feet above the 100 year water surface elevation and provide safe access. The DB shall hydraulically model the water surface elevation to show there is no adverse impact on the water surface elevation.

7) New Construction in the 25 Year Floodplain

a) Expansion of the existing building footprint that further encroaches into the 25 year floodplain is not likely to be approved. An engineer would need to demonstrate through hydraulic modeling there is no adverse impact on the water surface elevation which is difficult to prove for a 25 year storm event.

b) Raised construction on piers within the 25 year floodplain would also have to hydraulically model the water surface elevation resulting from placement of the new piers. Again, it is difficult to prove encroachments in a 25 year floodplain do not have an adverse impact on the water surface elevation.

c) Building improvements within the 25 year floodplain that do not alter the existing footprint can be made if they are not a substantial improvement.

8) FEMA Requirements for Critical Structures

a) FEMA encourages critical facilities such as fire stations to be located outside of the 500-year floodplain. It does not appear there are any regulations or minimum requirements in the National Flood Insurance Program (NFIP) that prohibit critical facilities being located in the

floodplain. However, **location of a critical facility within a floodplain may preclude participation in federal grant programs.**

e. Permitting Requirements

1) If the demolition does not exceed fifty percent of the building area and the renovation does not increase encroachment within the floodplain, a site plan exemption request will be required prior to submittal of a building permit. Otherwise, if these conditions are not met, an application for a new site development permit will be required.

2) The maximum amount of new impervious cover considered under a site plan exemption is 3,000 sq. ft. when the new impervious cover includes accessibility improvements.

3) Improvements shall include demolition of the old hose drying rack and improvements for compliance with the Texas Accessibility Standards.

f. Noise Exposure

1) Exposure to ambient noise and light from inside and outside the stations can be disruptive to the firefighters during sleep. Blackout shades shall be included in the design scope for all sleeping rooms to minimize the disruption from exterior ambient light. Insulation and insulating windows will help reduce noise transmission from the exterior, and acoustic insulation at all sleeping rooms will help reduce noise transmission from inside the station. These design strategies shall be included in the scope for all stations.

g. Security

1) Each newly constructed station shall be provided with security card readers at the entry door closest to the staff parking lot and at the door to the communications room. Secure fencing with sliding vehicular access gates and pedestrian access gate shall be provided around employee parking areas.

h. Vehicular and Pedestrian Facilities

1) The design of the vehicular and pedestrian facilities for each station shall conform to the City of Austin's Transportation Criteria Manual, Environmental Criteria Manual, and Standard Specifications for construction. The location and design of driveway approaches and internal circulation driveways shall meet the requirements of AFD's fire apparatus equipment. The Owner will provide information on fire apparatus equipment

during the design phase. Driveway horizontal and vertical alignments shall be designed to provide onsite turnaround capability and sufficient clearances such that the underside of vehicles does not drag on the driveway surface or cause the vehicles to high-center. AFD prefers drive-through bays for the proposed fire stations; internal circulation drives shall be designed to achieve this goal.

2) Where possible for existing station renovations, full size parking spaces shall be provided for each station in the following minimum amounts:
   a) Secured staff parking requires a minimum of 26 full size spaces
   b) Visitor parking outside the secured fence a minimum of 3 full size spaces
   c) One space shall be designated as an electric vehicle charging station and shall be coordinated with Austin Energy
3) Accessible parking spaces shall be provided for each area in conformance with adopted standards. The design of sidewalks shall conform to the City's regulations and construction specifications and all accessibility standards. The scope of the sidewalks shall include the frontages of the fire station property along public streets and an accessible sidewalk from the public street to the entrance of the building in accordance with the City's requirements.

i. Public Access
   1) Citizens may use the public sidewalks to approach the entrance to the station which are generally in good condition. However, an accessible route is not provided as noted in Section C.7.
   2) Pedestrian access to the foot bridge crossing Waller Creek is accessed from the east side of the building but not located on the Fire Station property (Fig. 7 & 8). The rear yard of the station site is fenced and gated to restrict public access crossing through the station site.

Fig. 8 - Pedestrian bridge crossing Hemphill Branch to Hemphill Park.

3. Other Items

None

A. Project Area Map

Site Address: 5309 E. Riverside Dr., Austin 78741

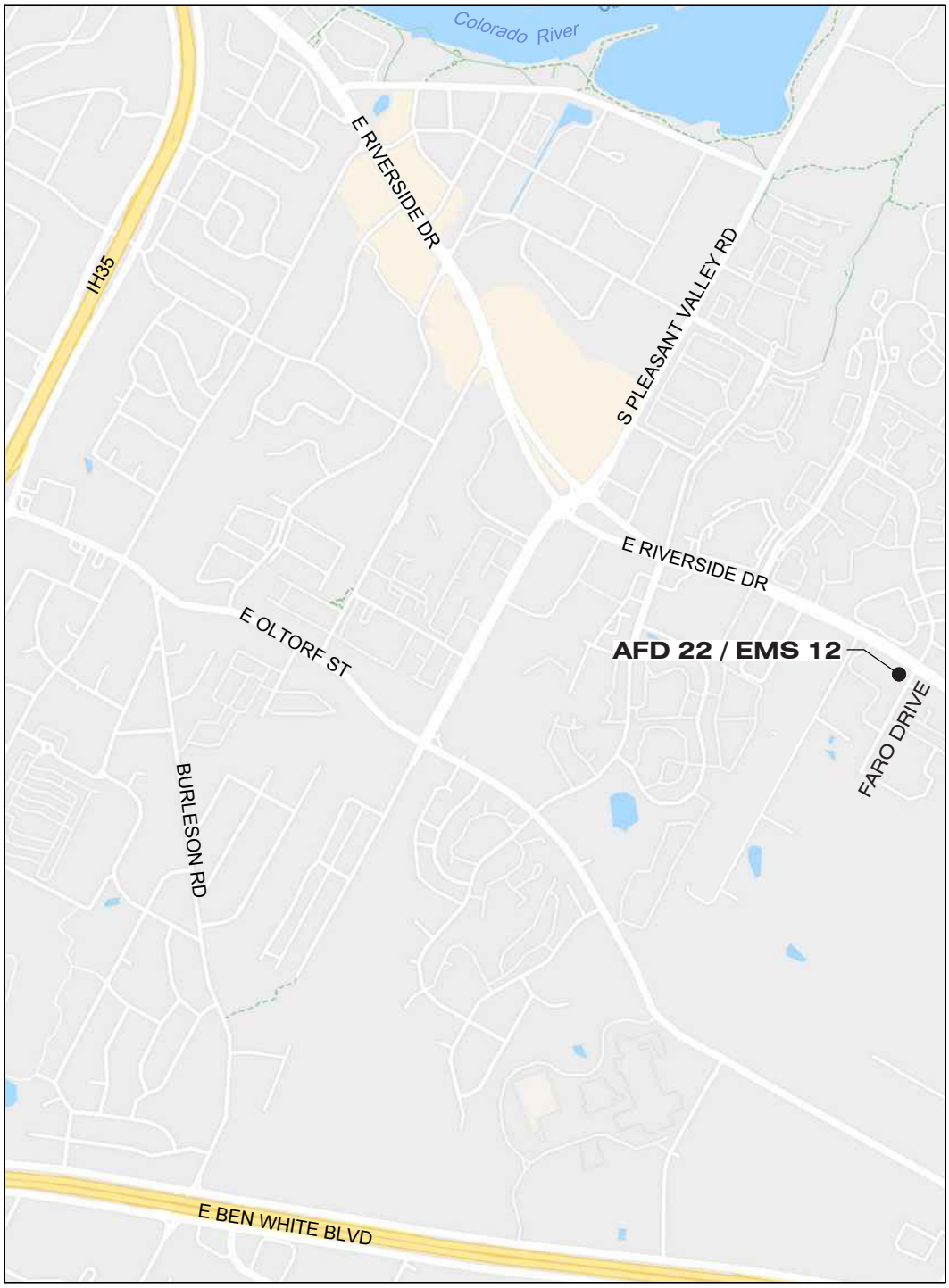

N

AFD 22 / EMS 12
PROJECT SITE LOCATION MAP

B. Summary Description

1. Description

a. The site is located at the southwest corner of the intersection of E. Riverside Dr. and Faro Dr. The entrance and driveways front on Faro Dr. A cell tower is located in the southwest corner.

b. General site information:

1) Legal Description:

- Tract 1, less northeast 2.77 feet to ROW, Fire Station No. 22 Subdivision
- 1.2 acres of Tract 1, Fire Station No. 22 Subdivision

2) Travis County Property ID 289259 & 289260

3) Market Value $822,768 and $1,299,343

4) Subdivision Plat Bk. 68, Pg. 64

5) Warranty Deed Vol. 04686 Pg. 2324

c. The Travis County Appraisal District parcel information does not match the fenced area of the fire and EMS station.

d. The gross site area is 1.7 acres which includes fenced area of the fire and EMS station and the existing building and parking south of the station currently occupied by Safe Place. The site area of the fenced perimeter of the station is approximately 1 acre. The existing impervious cover is estimated at 46 percent which excludes Safe Place.

e. The proposed scope of improvements includes the following items that will impact the site:

1) Full demolition of all buildings and parking.

2) New two story building with 3 truck bays, parking and stormwater facilities.

3) Conceptual Site Plans A and B are shown on the following pages.

a) Plan A shows the building located toward the south of the tract resulting in the driveway further distant from the street intersection to improve traffic safety on Faro Dr.

b) Plan B shows the building located toward the East Riverside Dr. frontage to support a pedestrian friendly roadway per the intent of the East Riverside Corridor Zoning District.

2. Additional Site Requirements

a. The Owner has identified no additional items to be included in the scope of the improvements.

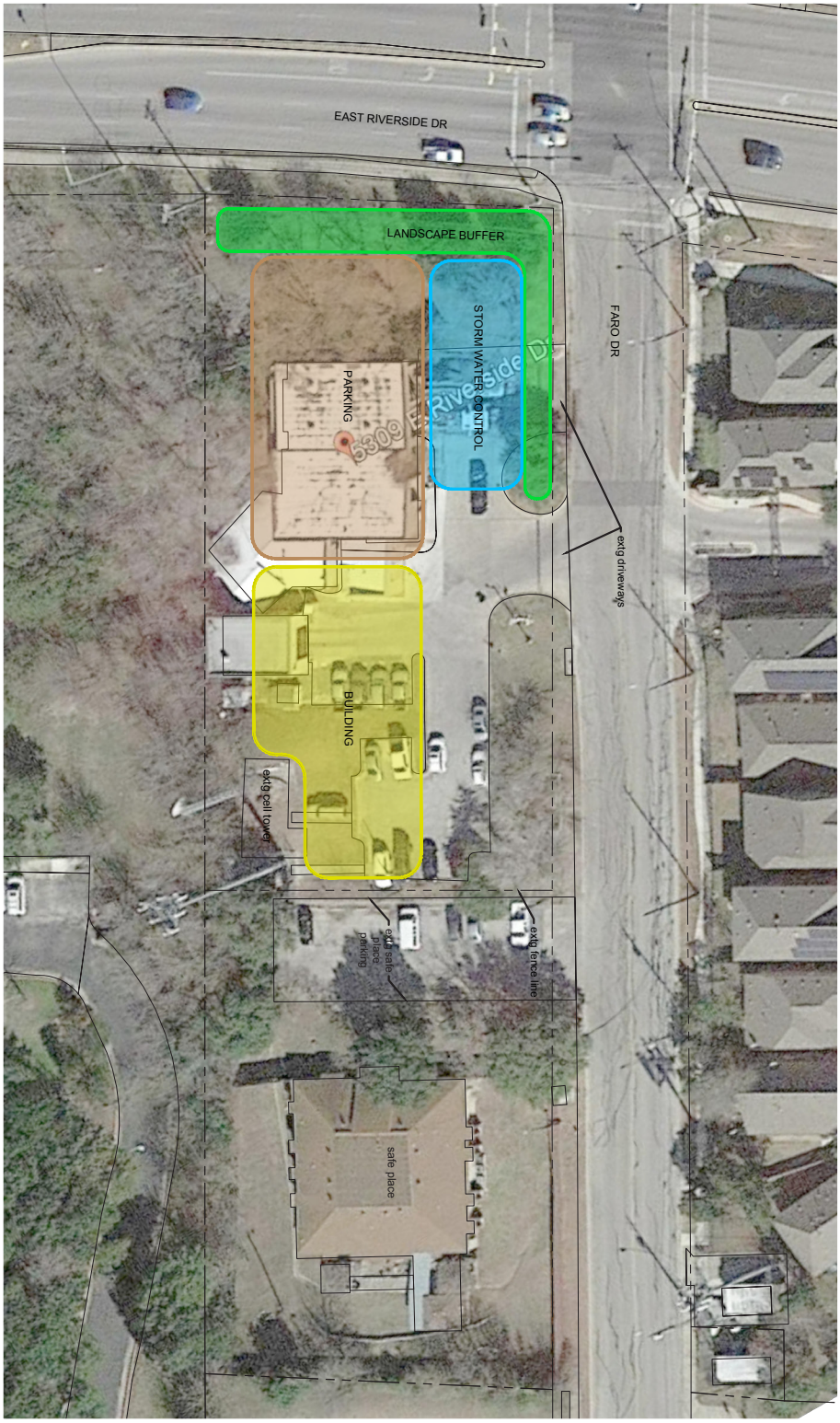

AFD 22 / EMS 12

CONCEPTUAL SITE PLAN A

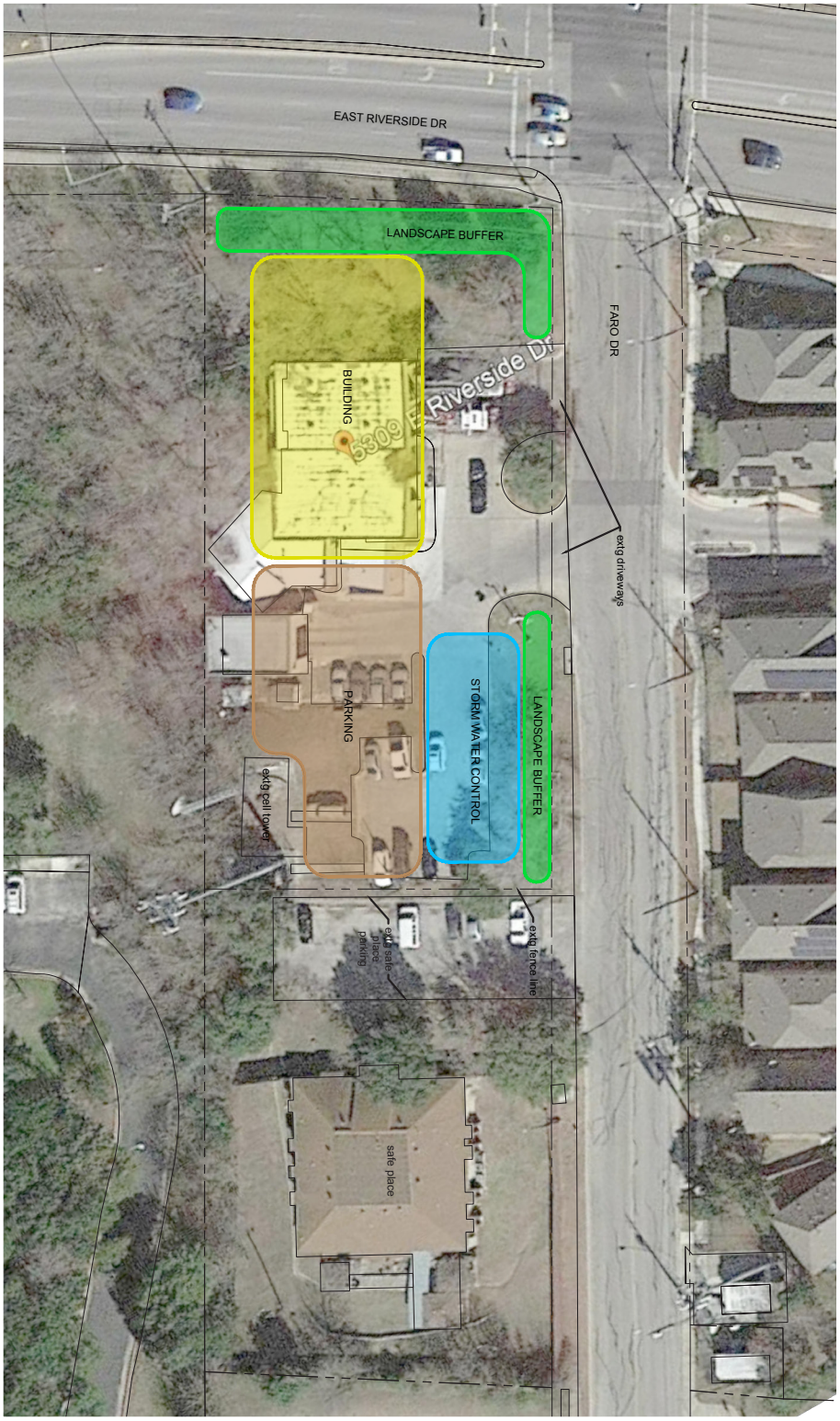

AFD 22 / EMS 12

CONCEPTUAL SITE PLAN B

b. The design, permitting, and construction of the site improvements described above shall be performed in accordance with the City of Austin's Land Development Code, Technical Criteria Manuals, Standards, and Specifications. The City of Austin's regulatory requirements include, but are not limited to, the following:

1) Building constraints as established by zoning, subdivision, restrictive covenants, and development regulations;
2) Water, fire protection, and wastewater service requirements;
3) Floodplain and creek setbacks;
4) Environmental regulations including tree protection and required landscaping; and
5) Subdivision plats and/or other restrictive covenants.

C. Existing Site Surveys and Analysis

1. Record Site Survey

a. The following site development documents are on file with the City of Austin:

1) Original zoning site plan from 1973 for the fire station, case number C14p-73-056.* This is a land use site plan that received Planning Commission approval the fire station and emergency medical service use as a condition use.
2) 1997 site plan for the EMS addition, case number SP-97-0268CS.* This site plan is the current site plan for the site.
3) 2005 site plan for the cell tower at the southwest corner of the property, case number SP-05-1494CS. This site plan is limited to the cell tower only.
4) 2011 site plan exemption was approved for replacement of the existing circle driveway with concrete, DA-2011-0379.
5) 2012 site plan exemption to replace an antenna and associated cabling, case number DA-2012-0872.
6) 2016 site plan correction to SP-97-0268CS to construct a new women's locker room.*

* attached in Appendix A.

b. The D-B shall procure a site survey of each station site during the design phase; surveys shall include, but shall not be limited to:

1) Property lines;
2) Building setbacks lines established by subdivision plat, zoning, or restrictive covenant;
3) Easements;
4) Zoning of the property and adjacent parcels;
5) Existing structures
6) Locations of existing underground utility lines on and adjacent to the property based on available record maps and records obtained from the utility service providers including dry utilities (gas, electric, and communications);
7) Actual field-surveyed locations and depths (determined by pot-holing) of the underground utility lines that may be impacted by the proposed improvements;
8) Visible utilities and other site facilities and amenities;
9) Tree locations, sizes, species and critical root zones as defined by the Austin City Code; and
10) Topographic information including building floor elevations; spot elevations of hard surfaces such as curbs, sidewalks, courtyards, driveways, and ramps; and flow line elevations of wastewater and storm drain facilities.

2. Deeds, Legal Restrictions, and/or Lease Agreements

a. A deed conveying the 1.72 acre property to the City of Austin is recorded in Volume 4686 Page 2324 and attached in Appendix A.

b. Legal restrictions were not discovered at time of publication, but can be confirmed through the City of Austin Office of Real Estate.

3. Utilities, Meters and Service Lines

a. The existing water service to the building is located on the north side along Riverside Dr.

1) According to City tap records, there are two water services for the site located 61 feet and 63 feet west of the east property line. The services are 2 inch diameter and ¾" diameter. The existing meter is 2 inch, # 218817.

b. The existing wastewater service enters the property near the northeast corner of the site.

1) The wastewater line is cast iron and enters the property near the northeast corner. A 20-30 foot portion has been replaced with PVC. The line

Fig. 1 - North side of building.

Fig. 2 - Rear of building.

Fig. 3 - Main driveway at truck bay entrance.

discharges from the front of the building on the east side and crosses under the main driveway toward Riverside Dr.

2) The wastewater line has experienced clogging and has possibly collapsed as it could not cleared further than the existing driveway.

c. Tap records are provided in Appendix A. There is no tap record for the wastewater service.

d. The building does not contain a fire suppression system. The DB shall request hydrant flow tests to determine if fire flow meets fire protection requirements.

1) The required fire flow per Table B105.1 of the International Fire Code for an 11,315 sq. ft. building and Type IIB Construction Type is 2,250 gallons per minute (gpm). If a fire suppression system is provided within the building, the required fire flow is reduced to 1,500 gpm.

e. New oil and grease inceptors are proposed.

f. A gas stub is located at the front of the building for future use. The existing building does not currently use gas.

g. The electric service and meter enters the building from the rear. The station currently uses all electric.

4. Stormwater and Drainage

a. Stormwater runoff from the majority of the site drains properly. However, the following localized areas have caused problems.

b. Downspouts along the north side of the building have been extended with HDPE pipe along the ground surface to direct the downspout discharge further from the building (Fig. 1).

c. There is ponding water in the crawlspace. A sump pump has been set up in the area way located on the north side of the building.

d. An 18" tall concrete wall is located along the rear sidewalk at the back of the building to prevent offsite runoff from the west inundating the sidewalk (Fig. 2).

5. Driveways & Parking

a. The existing driveway for the fire trucks is concrete which has shown significant settling and pavement failure (Fig. 3).

b. There are approximately 12 parking spaces for station employees, which is not sufficient for current staff (Fig. 4 & 5).

c. The parking lot is asphalt which has heaved creating

Fig. 4 - View to north of main driveway and front of building.

Fig. 5 - View to south of parking lot.

Fig. 6 - Existing trench drain at main driveway.

cracks and bird baths. An existing trench drain at the main entry drive is clogged and does not function (Fig. 6). There is a low spot that collects debris at detention pond inflow (Fig. 7). Restriping is needed. Parking is not secured with a fence and employees are victims of break-ins of their personal vehicles

6. Circulation and Access

a. Accessible parking is provided at the station entrance. However, there is no accessible route from the public sidewalk to the building entrance provided (Fig. 8).

b. A fire truck returning to the station blocks the street as it reverses into the main the driveway. The fire trucks do not block the public sidewalk when parked in front of the truck bay.

7. Site Amenities

a. The rear of the building is shaded where several chairs and a grill are located. However, there is no patio surface provided creating a comfortable outdoor amenity space. The drainage wall creates a barrier to the outdoor area (Fig. 2).

b. The flag pole located at the front of the site is not the proper height or diameter (Fig. 4).

c. There are significant trees located on the site, including memorial trees. However, a few large trees of fast growing species are located immediately north of the building and in poor health (Fig. 9).

8. Exterior Signs (Wayfinding & Advertising)

a. Unless required by the Owner at a specific station, new exterior signs and wayfinding are not required except as follows:

1) D-B shall protect existing street address or provide new street address if missing. The text color shall contrast the background color.

2) D-B shall protect existing or provide new “Safe Baby Site” sign near the publicly accessible entrance to the building. The text shall be in Spanish and English.

3) D-B shall protect existing miscellaneous signs at each station such as informational signage and memorial plaques.

9. Site Information

a. Information collected from City of Austin GIS data about the zoning, topography and drainage, water, and wastewater facilities for the site is provided on the following four maps.

Fig. 7 - Existing detention pond.

Fig. 8 - Accessible route does not lead to building entrance.

Fig. 9 - Trees on north side of building.

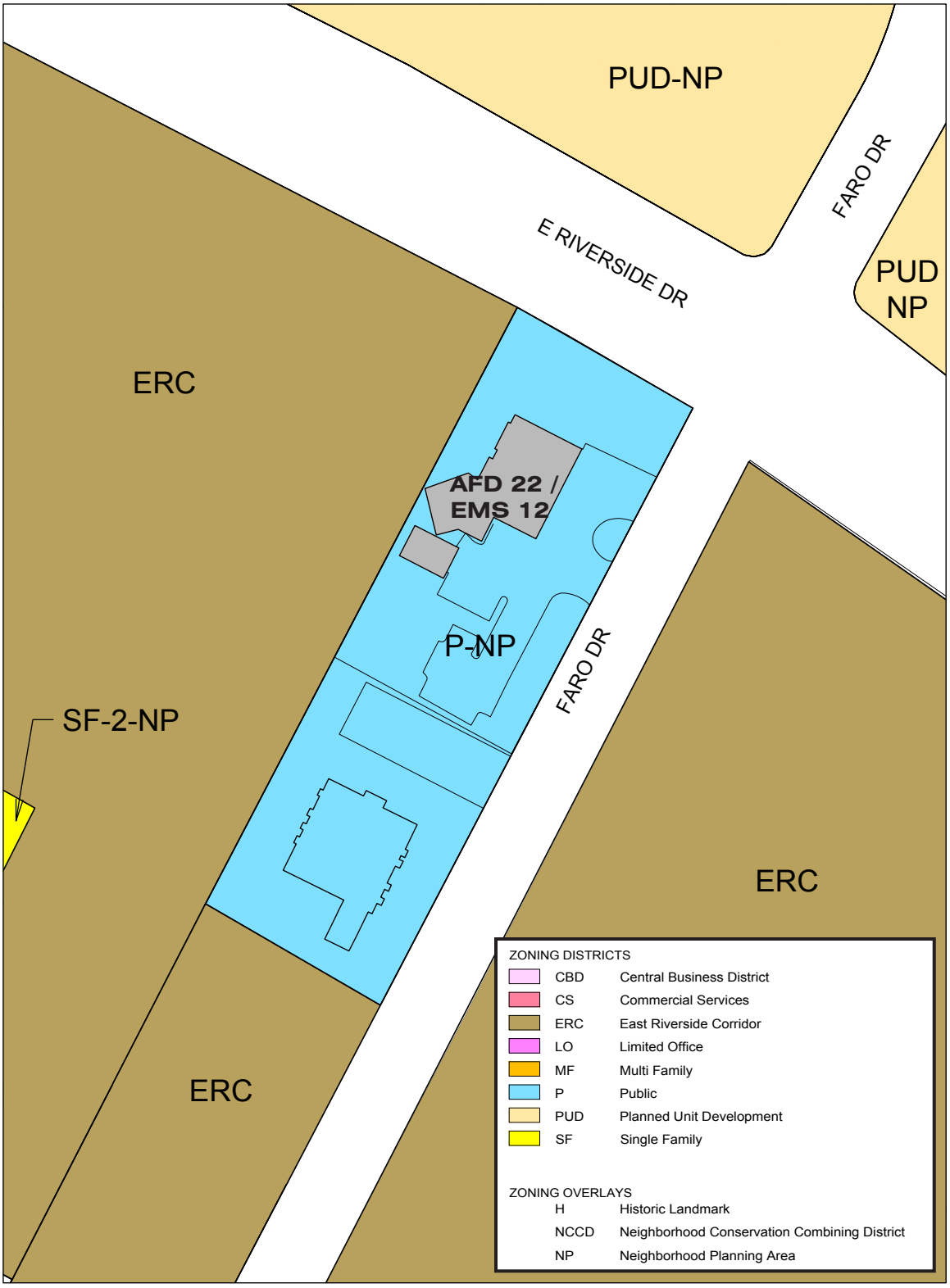

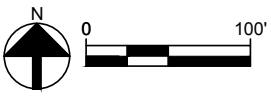

AFD 22 / EMS 12
ZONING MAP

N 0 100'

AFD 22 / EMS 12
TOPOGRAPHIC & STORM DRAIN MAP

N 0 100'

AFD 22 / EMS 12
WATER INFRASTRUCTURE

N 0 100'

AFD 22 / EMS 12
WASTEWATER INFRASTRUCTURE

D. Site Development Requirements

1. Community Involvement

a. The community surrounding each station shall be engaged during the design process. The D-B shall work with the Owner to develop a suitable community engagement process and shall implement community engagement at stages appropriate to the project's development. Community engagement may involve community meetings, information distribution, and outreach. The D-B team shall allow for two community meetings per station and shall prepare presentation boards for these meetings.

2. General Development Considerations

a. Code Regulations

1) Each station site is owned by the City of Austin. Station site improvements shall meet all City of Austin development requirements, specific neighborhood development requirements, and requirements of the Texas Accessibility Standards and the Americans with Disabilities Act.

b. Zoning Regulations

1) Zoning

a) The site is zoned P-NP which is the Public district with a Neighborhood Planning Area Overlay.

b) In P zoning, the regulations such as setbacks and impervious cover restrictions are typically set with the site plan submittal and Planning Commission approval of the site plan. These regulations typically mimic surrounding areas for sites that are less than 1 acre.

c) The site is within the Pleasant Valley area of the East Riverside/Oltorf Combined Neighborhood Planning Area. The purpose of the neighborhood plan is to create a long-range vision for the area that will guide future development with recommendations on land use, zoning, transportation and urban design. The voluntary urban design guidelines have been included to encourage quality development projects that reflect the desires of the people in this community.

d) The surrounding zoning is PUD-NP Townhouse across Riverside Dr. and ERC-East Riverside Corridor to the west and east, and P to the south.

e) The site is within the East Riverside Corridor (ERC) Zoning District and subject to the requirements of the Regulating Plan.

f) The intent of the ERC Regulating Plan is to:

(1) ensure that buildings relate appropriately to the surrounding area, create an attractive street scene, and frame the pedestrian environment (Sec. 4.1.1 of the ERC Regulating Plan)

(2) allow for easy pedestrian access to buildings and providing well-defined edges to the roadway environment (Sec. 4.1.2 of the ERC Regulating Plan)

(3) provide for roadside uses that enliven and enrich the roadway and pedestrian environment, such as outdoor dining, porches, patios, and landscape features (Sec. 4.1.3 of the ERC Regulating Plan)

(4) ensure that vehicular parking is accommodated in a manner that enriches and supports, rather than diminishes, the pedestrian environment (Sec. 4.1.4 of the ERC Regulating Plan)

g) East Riverside Dr. is considered the principal street.

h) To meet the intent, buildings are typically required to be built up to the property line or sidewalk clear zone. However, buildings for safety services are not required to meet the building placement requirements of Section 4.3.3.G so long as parking is not located between the building and the fronting street.

j) Locating the main driveway entrance as far as possible from the street intersection as presented in Conceptual Site Plan A is desirable from a traffic safety perspective. However, this results in the parking being located between the building and principal street and requires coordination of a method of alternative equivalent compliance with City Development Services Department review staff.

k) The ERC Regulation Plan defines the tracts on either side of the fire station as Neighborhood Mixed Use. The anticipated zoning regulations are outlined below.

2) Building Setbacks
   a) Front Yard Setback 0 feet
   b) Street Side Yard Setback 0 feet
   c) Side Yard Setback 0 feet
   d) Rear Yard Setback 0 feet
   e) A 65' setback along the E. Riverside frontage is shown on the original 1973 site plan, but the source is not referenced.
      (1) There are no current zoning, Right of Way, or environmental regulations requiring this setback.
      (2) The source of the setback may be a setback shown on the plat. To remove this setback, the plat would need to be vacated and replatted.
      (3) The source of the setback could also be from an old deed restriction. Private deed restrictions are not enforced by the City. The original plat or deed restrictions were not available for review prior to publication of this DCM.
3) Building Frontage Lines
   a) The site sits at the southwest corner of the intersection of East Riverside Drive and Faro Drive.
   b) The main building and driveway entrance is located on Faro Dr.
   c) No vehicular or pedestrian access to Riverside Dr. is provided to or from the station.
4) Height Restrictions
   a) Maximum Height n/a
   b) Building Floor to Site Area Ratio 1:1
5) Maximum Impervious Cover 80%
6) The adjacent residential uses do not trigger compatibility requirements per LDC 25-2 Article 10.
   - Riverside West Condominiums, SP-2011-0122C, is located directly across Faro Dr. The project was permitted prior to ERC, and was zoned LR-MU at the time of site plan approval. It does not trigger compatibly standards on surrounding properties.

c. Watershed Regulations
   1) The site is within the Country Club East watershed which is classified as a suburban watershed. The

site is not over the Edwards Aquifer Recharge Zone, Contributing Zone, nor subject to an Erosion Hazard Review.

d. Floodplain Regulations

1) The site is not within a FEMA or City of Austin defined floodplain boundary.

e. Permitting Requirements

1) Full demolition and redevelopment of the site will require a new site development permit through submittal of an administrative site development application.

2) The conditional use of the fire station and emergency medical services was previously approved with C14p-73-056 and was not required to be reaffirmed with the updated site plan SP-97-0268CS.

3) A new site plan submittal for a new station building should also not need to have the conditional use reaffirmed and can be submitted as an administrative consolidated site plan.

f. Noise Exposure

1) Exposure to ambient noise and light from inside and outside the stations can be disruptive to the firefighters during sleep. Blackout shades shall be included in the design scope for all sleeping rooms to minimize the disruption from exterior ambient light. Insulation and insulating windows will help reduce noise transmission from the exterior, and acoustic insulation at all sleeping rooms will help reduce noise transmission from inside the station. These design strategies shall be included in the scope for all stations.

g. Security

1) Each newly constructed station shall be provided with security card readers at the entry door closest to the staff parking lot and at the door to the communications room. Secure fencing with sliding vehicular access gates and pedestrian access gate shall be provided around employee parking areas.

h. Vehicular and Pedestrian Facilities

1) The design of the vehicular and pedestrian facilities for each station shall conform to the City of Austin's Transportation Criteria Manual, Environmental Criteria Manual, and Standard Specifications for construction. The location and design of driveway approaches and internal circulation driveways shall meet the requirements

of AFD's fire apparatus equipment. The Owner will provide information on fire apparatus equipment during the design phase. Driveway horizontal and vertical alignments shall be designed to provide onsite turnaround capability and sufficient clearances such that the underside of vehicles does not drag on the driveway surface or cause the vehicles to high-center. AFD prefers drive-through bays for the proposed fire stations; internal circulation drives shall be designed to achieve this goal.

2) For New Construction, full size parking spaces shall be provided for each station in the following minimum amounts:
   - Secured staff parking requires a minimum of 26 full size spaces.
   - Visitor parking outside the secured fence a minimum of 3 full size spaces.
   - One space shall be designated as an electric vehicle charging station and shall be coordinated with Austin Energy.
3) Accessible parking spaces shall be provided for each area in conformance with adopted standards. The design of sidewalks shall conform to the City's regulations and construction specifications and all accessibility standards. The scope of the sidewalks shall include the frontages of the fire and EMS station property along public streets and an accessible sidewalk from the public street to the entrance of the building in accordance with the City's requirements.

i. Public Access

1) Citizens may use the public sidewalks to approach the entrance to the station which are generally in good condition. However, an accessible route is not provided as noted in Section C.7.

3. Other Items

a. Fuel Stations

1) Each new station site shall be planned to include a fuel station in coordination with the Owner. The Owner may opt not to include a fuel station during the site planning stages. The Owner has provided sample fuel station design drawings to be used for reference by the D-B; these drawings are included in Appendix J. Each fuel station shall have:

   a) Aboveground 6,000-gallon divided concrete fuel tank or double-walled fuel tank

   b) Metal roof to shade fuel tank and dispensing pump

c) Screen wall around fuel tank

d) Power and data as required for operation of pump

e) Emergency cut off button

f) 10” diameter steel bollards for protection of fuel tank

g) Lighting under the canopy and around site to provide illumination levels as recommended by the

h) IESNA foot-candle recommendation for Fuel Station/Parking Area

2) The D-B shall design each fuel station so that tanker and fueling vehicles do not obstruct entry and egress of emergency vehicles from the fire/EMS station. Each fuel station will likely be served by a smaller fuel tanker truck, like a bobtail tanker; the D-B shall coordinate with the Owner during design to determine the exact requirements for access of fuel trucks. Secure fencing is not required for the fuel stations.

3) For any fuel station that is in the Edwards Aquifer recharge or transition zone, an Aboveground Storage Tank (AST) facility plan is required to be submitted to the Texas Commission on Environmental Quality (TCEQ). An AST facility plan is a detailed plan that outlines best management practices that will be implemented to protect water quality when a regulated aboveground storage tank facility is constructed. Some requirements of an AST facility plan include, but are not limited to:

a) A containment area is a required element of the plan; however, certain double-walled tanks are acceptable in place of the tank containment requirement.

b) A continuous leak-detection system is required for underground piping.

4) If required, the D-B is responsible for preparing and submitting the AST facility plan to TCEQ, including fees, and for determining and complying with all other TCEQ requirements regarding aboveground storage tanks and fuel stations.

6 | Existing Building Analysis

A. Architectural

Fig. 1: AFD 1 / EMS 6 - Northwest corner of building.

Fig. 2: AFD 1 / EMS 6 - North elevation.

Fig. 3: AFD 1 / EMS 6 - West elevation.

1. **Summary**
   a. AFD 1 / EMS 6, located in downtown Austin at the corner of Fifth and Trinity Streets, is a very active Fire and EMS station originally built in 1938 as a 2-story fire station in the "Streamline Moderne" style, also called "Art Moderne" (Fig. 1). Streamline (or Art) Moderne was a style often used for civic buildings that evolved from Art Deco in the 1930's. It was inspired by aerodynamic industrial design and often emphasized curving forms and horizontal lines.
   b. In May, 2000, the building became part of the National Park Service's National Register of Historic Places. This national designation places AFD 1 / EMS 6 on the official list of the Nation's historic places worthy of preservation. Information from the National Park Service's website is included in Appendix B.
   c. AFD 1 / EMS 6 occupies the northwest corner of Brush Square, one of Austin's original four public squares created when the city was first envisioned by Edwin Waller in 1839. The station shares Brush Square with two other historic buildings, the O. Henry Museum and the Susanna Dickinson Museum. The Austin Parks and Recreation Department is currently envisioning different concepts for creating large open green spaces to the south of the station and two museum buildings that will connect Brush Square to the Austin Convention Center and the MetroRail Downtown Station just to the south and southeast.
   d. The structure of the 1938 building is concrete with an exterior of sandstone-colored brick. Very typical of the Moderne style, the station's most striking architectural gesture is the curved northwest corner that shelters a recessed curved wall of windows. Other Moderne features found on this building include subtle brick striping patterns, continuous clerestory windows shaded by deep eyebrow overhangs, and overlapping facade surfaces to create a visually dynamic massing. (Fig. 2-3) In addition, the architect added identical inaccessible brick balconies to both the Fifth Street (north) and Trinity Street (west) facades with elongated windows that subtly introduce a castle-like motif that seems fitting for a fire station. (Fig. 4)
   e. In the early 1960's, the station was expanded with a one-story masonry addition to provide space for Fire Department offices and communication functions. (Fig. 5) The Annex, as it is now called, runs the full length of the east side of the original building; its style is understated modern and blends well with the original 1938 building. The Annex now houses the Austin Fire

Fig. 4: AFD 1 / EMS 6 - Brick balconies.

Fig. 5:AFD 1 / EMS 6 - Annex.

Fig. 6: AFD 1 / EMS 6 - Museum.

Museum in the spaces facing Fifth Street (Fig. 6) with the rest of the building used for the Commander's office, sleeping quarters, a conference room, a small kitchen, a workout room and miscellaneous storage rooms, several now empty. (Fig. 7-9)

f. The 1938 building currently houses Engine Companies Nos. 1 and 13, Ladder Company No. 1 and EMS No. 6. The ground floor is primarily occupied by two 3-truck apparatus bays, one facing Fifth Street, the other facing Trinity. (Fig. 10) All six bay doors are slow-opening motorized sectional overhead doors. Since this station was originally constructed with a concrete slab on grade foundation system, the larger and, therefore, heavier modern-day vehicles are able to park inside the apparatus bays (Fig. 11) . There are no visible signs of actual structural failure.

g. Besides the parking of vehicles, the apparatus bay areas also include a workout area, a storage room and lockers for the firefighters' turnout gear (the protective clothing they wear when fighting fires). (Fig. 12)

h. The ground floor room with the curved glass windows is currently used as the Day Area for the firefighters. (Fig. 13) The suite of rooms immediately to the east of the Day Room is used by the EMS Team 6 for offices, a day room and a small kitchen/break room. The only interior stair up to the second level is in the

Fig. 7: AFD 1 / EMS 6 - Annex Commander's office.

Fig. 8: AFD 1 / EMS 6 - Annex conference room.

Fig. 9: AFD 1 / EMS 6 - Annex kitchen and break room.

Fig. 10: AFD 1 / EMS 6 - West elevation.

Fig. 11: AFD 1 / EMS 6 - West apparatus bay with truck.

Fig. 12: AFD 1 / EMS 6 - View of workout area and lockers.

Day Room which, in its metal handrail design, also references its Moderne roots. (Fig. 14) Of course, this being a fire station, there are two sliding poles still in use for quick decent directly into the apparatus bays from the sleeping quarters on the upper level.

i. The second level includes a large communal kitchen with food pantries, refrigerators and seating areas (Fig. 15-16), a study, Men and Women locker rooms and bathrooms (Fig. 17), sleeping quarters (Fig. 18) and offices.

j. On the second level there is also access to the large L-shaped roof area to the east and south of the sleeping quarters which is used for outdoor grilling. (Fig. 19-20) An unenclosed steel stair on the south facade provides access from this roof area to the parking lot below. (Fig. 21-22) There is no direct access from the L-shaped roof to the Annex roof immediately to the east. (Fig. 23) Access to the upper roof areas where the mechanical equipment is located is via a vertical steel ladder near to the door into the kitchen. (Fig. 24)

k. For Existing Floor and Roof Plans of AFD 1 / EMS 6 hand drawn to scale showing the current layout of spaces, please refer to the plans that immediately follow this section.

Fig. 13: AFD 1 / EMS 6 - Day Area.

Fig. 14: AFD 1 / EMS 6 - Stair to second level.

Fig. 15: AFD 1 / EMS 6 - Communal kitchen area with stove.

Fig. 16: AFD 1 / EMS 6 - Communal kitchen with refrigerators and seating area.

Fig. 17: AFD 1 / EMS 6 - Men's locker room.

Fig. 18: AFD 1 / EMS 6 - Men's sleeping quarters.

Fig. 19: AFD 1 / EMS 6 - Roof area looking west to kitchen.

Fig. 20: AFD 1 / EMS 6 - Roof area looking north.

Fig. 21: AFD 1 / EMS 6 - Steel stair on South elevation.

Fig. 22: AFD 1 / EMS 6 - South elevation.

Fig. 23: AFD 1 / EMS 6 - Annex roof looking southeast.

Fig. 24: AFD 1 / EMS 6 - Ladder to mechanical equipment on upper roof.

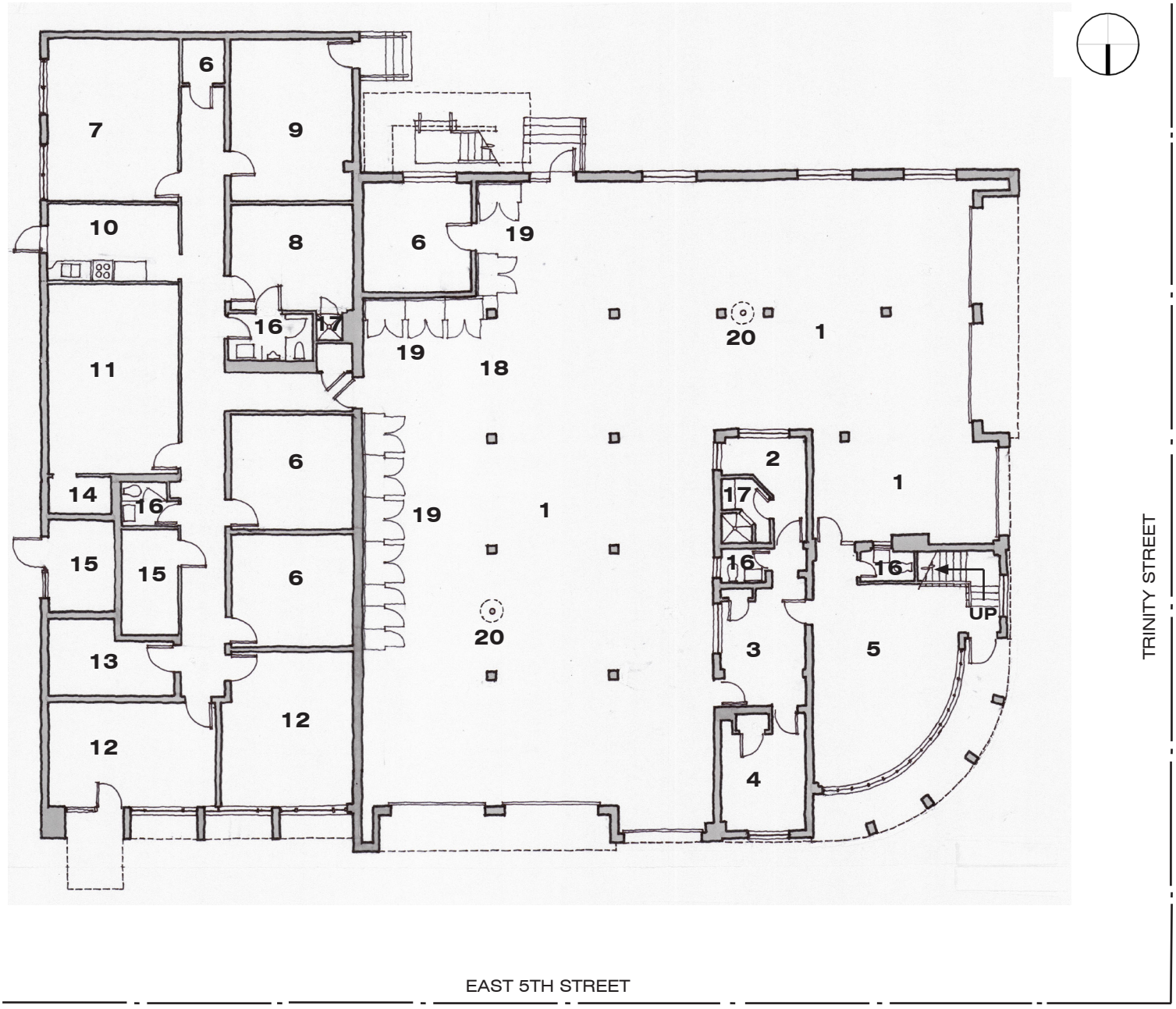

LEVEL 1 - EXISTING FLOOR PLAN

1 APPARTAUS BAY
2 EMS OFFICE
3 EMS KITCHENETTE
4 EMS DAYROOM
5 DAY ROOM
6 STORAGE
7 COMMANDER'S OFFICE
8 COMMANDER'S SLEEPING QUARTERS
9 WORKOUT ROOM
10 KITCHEN
11 CONFERENCE ROOM
12 FIRE MUSEUM
13 FIRE MUSEUM OFFICE
14 COMMUNICAT'N CLOSET
15 MECHANICAL
16 BATHROOM
17 SHOWER
18 WORKOUT AREA
19 TURNOUT GEAR LOCKERS
20 SLIDING POLE

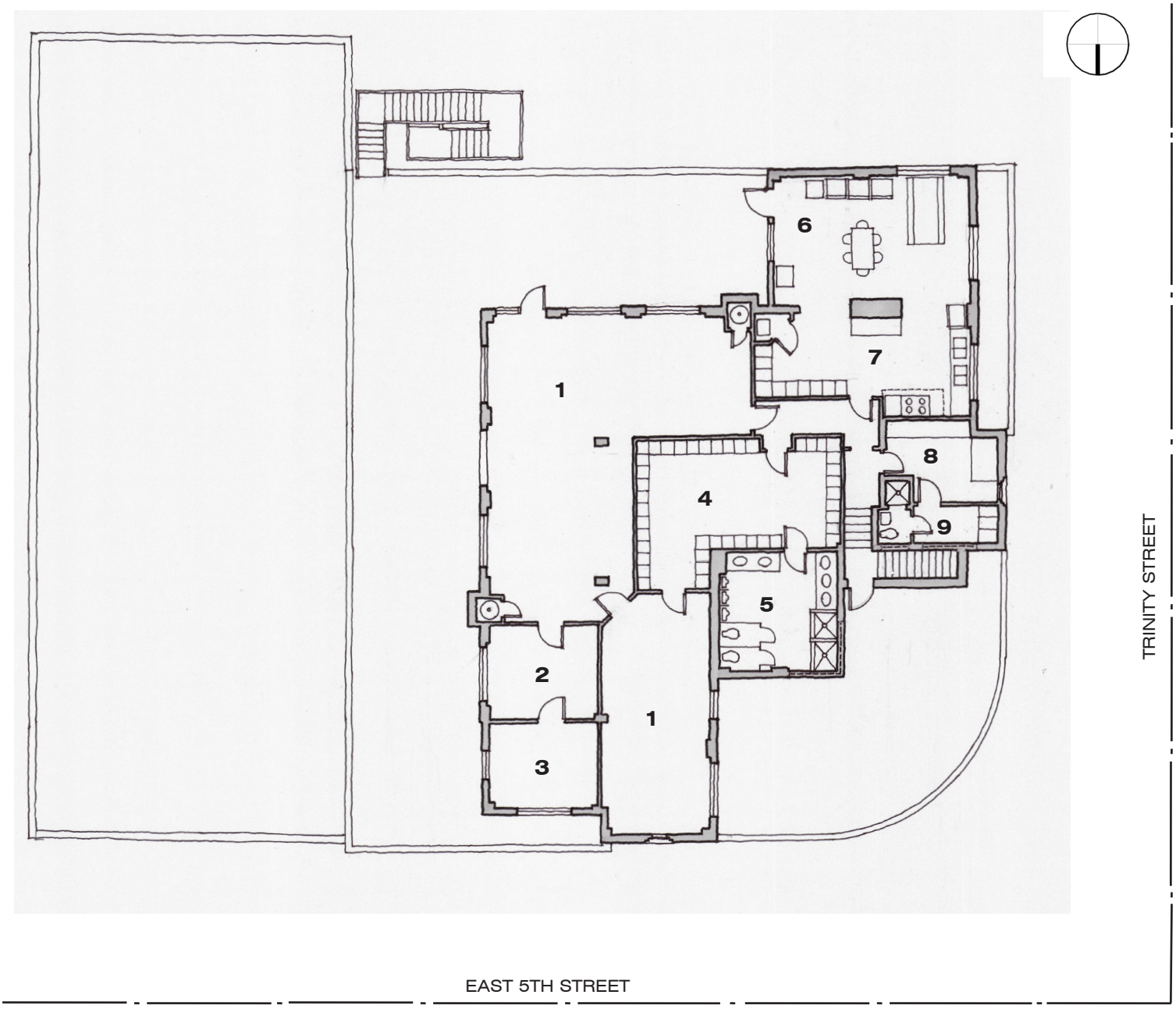

LEVEL 2 - EXISTING FLOOR PLAN

1 SLEEPING QUARTERS
2 OFFICE
3 OFFICER'S QUARTERS
4 MEN'S LOCKER ROOM
5 MEN'S BATHROOM
6 DINING
7 KITCHEN
8 STUDY
9 WOMEN'S LOCKER ROOM AND BATHROOM

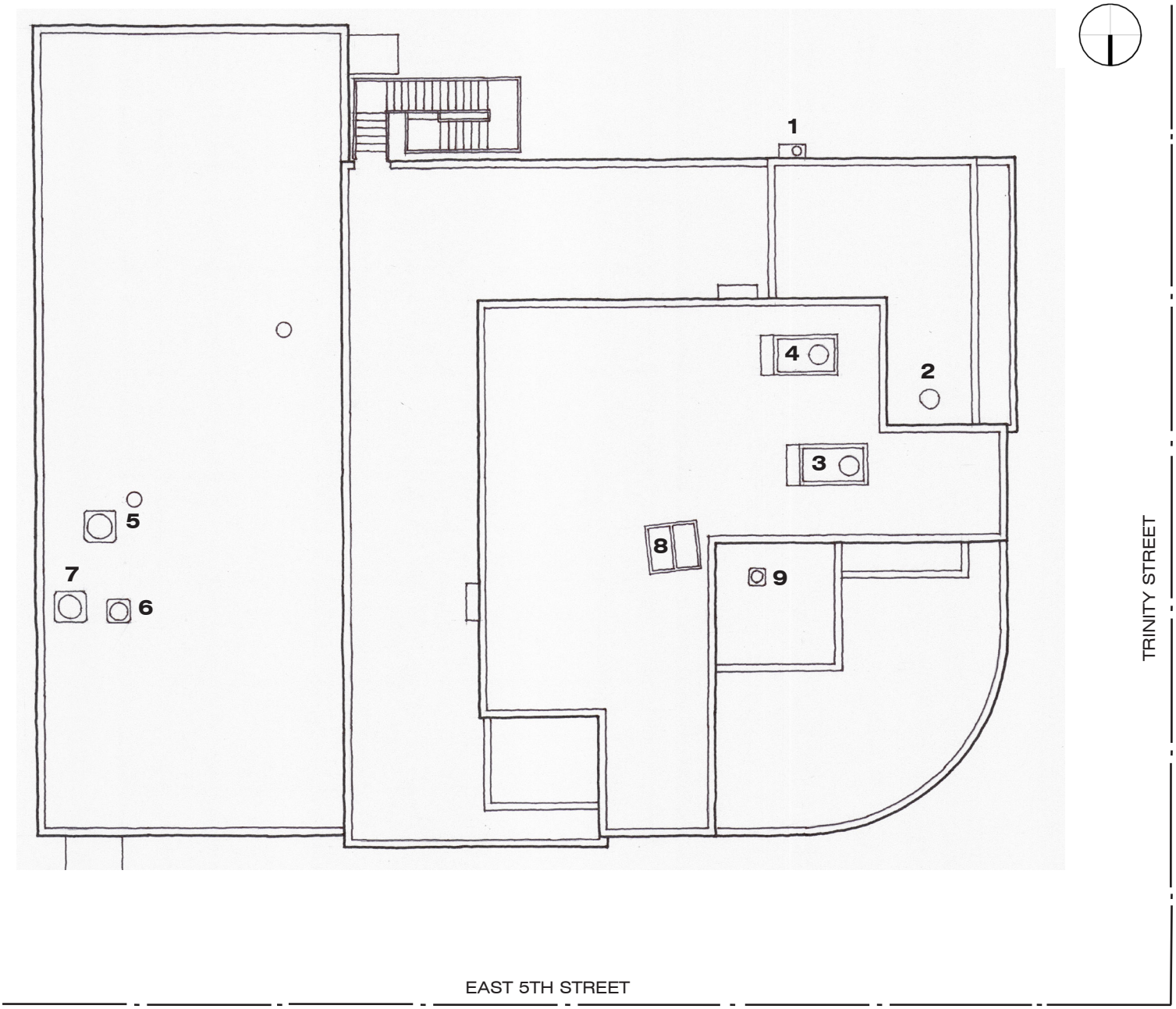

ROOF - EXISTING FLOOR PLAN

1 PLYMOVENT EXHAUST FAN (WALL MOUNTED)
2 KITCHEN EXHAUST FAN
3 RTU-1
4 RTU-2
5 CONDENSING UNIT 1
6 CONDENSING UNIT 2
7 CONDENSING UNIT 3
8 ABANDONED SOLAR PANELS
9 CONDENSING UNIT 3 (SERVES AC-3)

B. Structural

1. Summary

a. A site visit was conducted on August 29, 2018 to document the structural systems in place in the facilities of AFD 1. The two-story building houses both the Austin Fire Department and EMS. A one-story office addition to the east side of the original Fire Station was designed in 1961 and constructed at a later date from the original building which was completed in 1938 (Fig. 25).

b. Limited construction documents were available for the analysis. These include the architectural and electrical engineering plans. From these the construction of drill piers could not be ascertained. The one-story later addition in 1961 appears to have been founded on approximately 10 ft deep footings with a void underneath the slab.

c. Inspection of the first-floor slab in the apparatus bays revealed some cracks near some concrete columns. These did not appear severe or extensive (Fig. 26). The superstructure structural systems did not appear to have any cracks at the time of inspection.

2. Foundation

a. The foundation of the 1938 building consists of a slab-on-grade foundation. From limited as-built construction documents reviewed, it is assumed that the concrete frame columns bear on a spread-footing foundation system.

b. The one-story addition appears to have been founded on a structural suspended slab with approximately 10 ft deep footings according to elevation notes on the foundation plan. However, section details of the plan show a foundation with voids underneath the 5-inch slab with grade beams approximately 2’-6” (Refer Appendix C - Structural Exhibits, Item 4).

3. Framing

a. The two-story building superstructure consists of concrete frames of beams and columns supporting concrete second-floor and roof decks (Fig. 27). The second floor is accessible by an interior staircase and an exterior steel-framed stair (Fig. 28-30).

b. The one story addition to the east of the original building is framed with open-web steel joists bearing on masonry walls.

4. Assessment

a. Limited construction documents were available for the analysis. These include architectural and MEP engineering plans. The one-story later addition to the station appears to bear on a slab with voids bearing on a grade beam system. It is not certain whether there are drilled piers below the original two-story station or the one-story addition.

b. Inspection of the first-floor slab in the apparatus bays revealed some cracks near some concrete columns. These did not appear severe or extensive, (Fig. 26). The superstructure structural systems did not appear to have any cracks at the time of inspection. At the time of inspection, there were no apparent structural defects of the main building and later addition to warrant structural repairs.

Fig. 25: AFD 1 / EMS 6 - Exterior elevation.

Fig. 26: AFD 1 / EMS 6 - Foundation slab with cracks at concrete column location.

Fig. 27: AFD 1 / EMS 6 - Structural concrete beam and column framing system.

Fig. 28: AFD 1 / EMS 6 – Open web steel joists roof members for one-story addition.

Fig. 29: AFD 1 / EMS 6 – Open web steel joists roof members for one-story addition.

Fig. 30: AFD 1 / EMS 6 – Opening/Header in interior bearing wall at Annex.

C. Mechanical

1. Existing Mechanical Systems

a. The first floor day room is served by window units and a single supply air drop off of AC-3, which is located above ceiling in the adjacent EMS area (Fig. 31 & 32). An electric unit heater mounted on a wall bracket in the day room provides supplemental heat and the unit appears to be in fair condition. The entire EMS area is served by AC-3. AC-3 appears to be a 2-ton American Standard unit manufactured in 2013. The condensing unit is located on the roof.

b. The apparatus bay is fitted with a Plymovent exhaust system (Fig. 33). Flexible exhaust hoses drop at each vehicle bay and are collected into a main exhaust duct overhead which terminates at a wall-mounted exhaust fan located outside on the south exterior wall of the apparatus bay (Fig. 34). A wall-mounted axial exhaust fan on the South wall of the apparatus bay ventilates the space by drawing fresh air in through outside air louvers and exhausting it through an exhaust louver (Fig. 35). Gas fired radiant heaters are suspended from the structure above throughout the apparatus bay to provide heat.

Fig. 31 - AC-3 Condensing Unit

Fig. 32 - Window Units Serving First Floor Common Area

c. The second floor of the station consists of the living quarters, locker rooms, kitchen, and dining area. The kitchen and dining area are served by RTU-2. Kitchen exhaust is provided through a commercial exhaust hood that tops the existing gas range and is ducted up to a roof-mounted exhaust fan (Fig. 36). The locker rooms and living quarters are served by RTU-1 and various window units. RTU-1 and RTU-2 are both 5-ton Trane rooftop units with gas heat (Fig. 37). The units were manufactured in 2012.

d. The annex is served by AHU-1, AHU-2, and AHU-3. All three (3) air handlers are located in an outdoor mechanical closet with condensing units located on the annex roof (Fig. 38). AHU-1 appears to be a 5-ton unit by International Comfort Products Corporation and is in fair to poor condition. AHU-2 is manufactured by Ruud and appears to be in poor condition (Fig. 39). AHU-3 appears to be a 3-ton Trane unit manufactured in 2011 and is in fair to good condition.

Fig. 33 - Plymovent Exhaust System with Flexible Exhaust Hose

D. Electrical

1. Electrical Service and Distribution

a. The station is served from an Austin Energy service transformer with a 208/120V, 3ph. 4W, 300A fused safety switch as the main disconnect (Fig. 40). The meter # is AE 6159527 (Fig. 41).

b. The peak demand on the facility will be provided to Contractor by the Owner.

Fig. 34 - Wall-Mounted Exhaust Fan

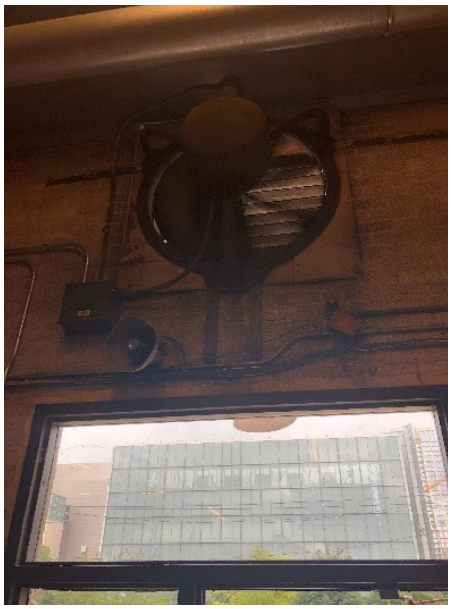

Fig. 35 - Axial Exhaust Fan

Fig. 36 - Range Exhaust Hood in Kitchen

Fig. 37 - RTU-1 & RTU-2

c. There are a combination of single phase and three phase panelboards throughout the facility.

d. There currently is a 37.5kVA emergency generator serving required loads for the facility.

2. Electrical Lighting

a. The lighting system is comprised of lay-in/ recessed troffers and pendant mounted fluorescent fixtures throughout the facility.

E. Plumbing

1. Existing Plumbing Systems

a. The scope of work includes extensive renovation of all areas other than the vehicle bays, where the slab is to remain. Only those systems that would be useful to inform the scope of work are included herein.

b. The water entry is currently located next to the garage door facing 5th Street. It appears to be NPS 1-1/2 and includes a pressure-reducing valve (Fig. 42).

c. There are no floor drains in the garage, however it is the Owner's intent that this floor not be cut in any way.

d. There is currently no grease trap.

e. An abandoned solar water-heating panel is located on the roof (Fig. 43). Solar water heating is not currently required by the Owner. There are two storage-type tank water heaters in the facility. The one serving the area in-and-above the garage is located on a mezzanine accessible from the garage (Fig. 44). It is gas-fired, 50-gallon, with an input of 40,000 BTU/Hr. The one serving the living quarters on Level 1 is electric, 40-gallon, with a 4.5 kW heating element (Fig. 45).

F. Fire-Suppression Systems

1. Existing Fire Suppression Systems

a. There is no fire-sprinkler system located in the existing facility.

G. Fire-Alarm Systems

1. Existing Fire-Alarm Systems

a. There is no central fire-alarm system in the existing facility. Only stand-alone smoke alarms in certain areas are provided.

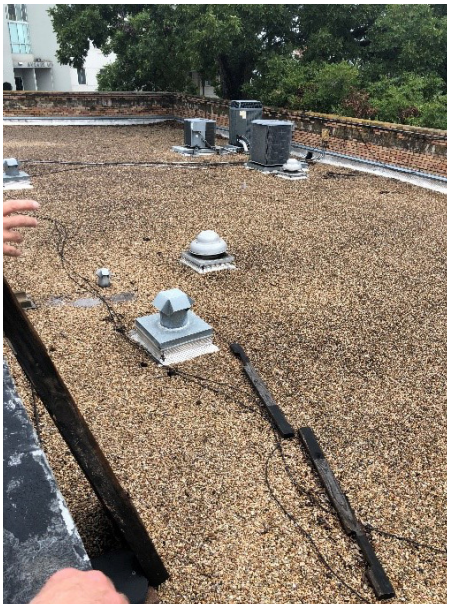

Fig. 38 - Condensing Units Serving Original Structure

Fig. 39 - AHU-2 in Outdoor Mechanical Closet

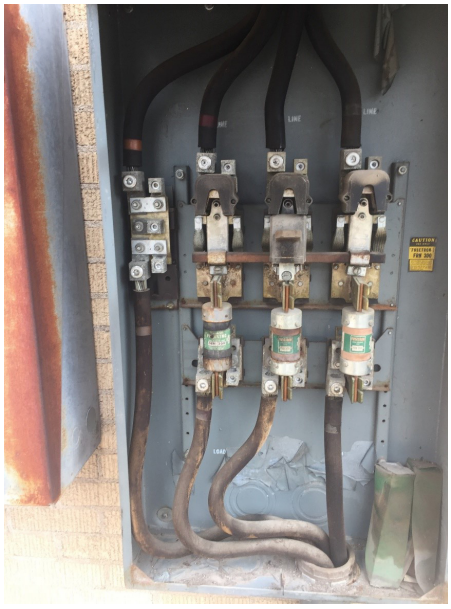

Fig.40 - Main Fused Safety Switch

Fig. 41 - Utility Meter

Fig. 42 - Water Entry

Fig. 43 - Solar Water Panel

Fig. 44 - Gas Water Heater

Fig. 45 - Electric Water Heater

A. Architectural

Fig. 1: AFD 3 - North elevation.

Fig. 2: AFD 3 - Hemphill Branch.

Fig. 3: AFD 3 - Hemphill Branch.

Fig. 4: AFD 3 - Rear of station.

1. Summary

a. AFD 3 is located on the south side of W. 30th Street several blocks east of Guadalupe Street. It was built in 1956 as a 1-story fire station in a simple configuration of two adjoining red brick rectangular masses (Fig. 1). The taller of the two is the apparatus bay to the east with a lower wing extending to the west for the living quarters.

b. The length of the building is a direct response to the site which is closely bordered along its rear facade by Hemphill Branch, a tributary of Waller Creek (Fig. 2 & 3). The site slopes quickly down to the creek which exposes the exterior face of the concrete foundation wall along the rear of the building. (Fig. 4) The station's close proximity to Hemphill Branch significantly impacts the renovation options for this building due to the fact that it now sits within the

Fig. 5: AFD 3 - Clerestory strip windows.

new 25 year flood plain recently adopted by the City of Austin. (A detailed explanation of the flood plain issue is included in Chapter 5 - Site Analysis.)

c. The style of the building can be easily interpreted as mid-century modern even though there are subtle remnants of classical detailing at the building's parapet which were most likely added to enhance its stature as a civic building. It is, however, the clerestory strip windows, a flat, overlapping canopy roof at the entrance and the stylistic metal lettering that were typical of buildings of this era. (Figs. 5 & 6)

d. The station is home to Engine Company No. 3. Currently both the engine and ladder trucks must park outside the apparatus bay because the existing concrete floor, which is a suspended structural slab on a pier and beam foundation system - accessible through a door on the south elevation (Fig. 7) - cannot support the weight of these vehicles. The City intends to replace only the apparatus bay portion of the station, leaving the living quarters' wing "as is".

e. Located inside the apparatus bay are wooden lockers for the firefighters' turnout gear (the protective clothing they wear when fighting fires), a workout area, a washer/dryer, and miscellaneous items such as step ladders and air tanks. Several cars now park in the front portion of the bay (Fig. 8 & 9). The two large apparatus bay doors are slow-opening motorized sectional overhead doors. Immediately to the east of the apparatus bay is a concrete slab on grade with an 8' by 54' concrete hose drying rack (Fig. 10) which is no longer used.

f. For Existing Floor and Roof Plans of AFD 3 hand drawn to scale showing the current layout of spaces, please refer to the plans that immediately follow this section.

Fig. 6: AFD 3 - Entrance Canopy

Fig. 7: AFD 3 - Access door to crawl space.

Fig. 8: AFD 3 - Lockers for turnout gear.

Fig. 9: AFD 3 - Apparatus bay without trucks.

Fig. 10: AFD 3 - East elevation with hose drying rack.

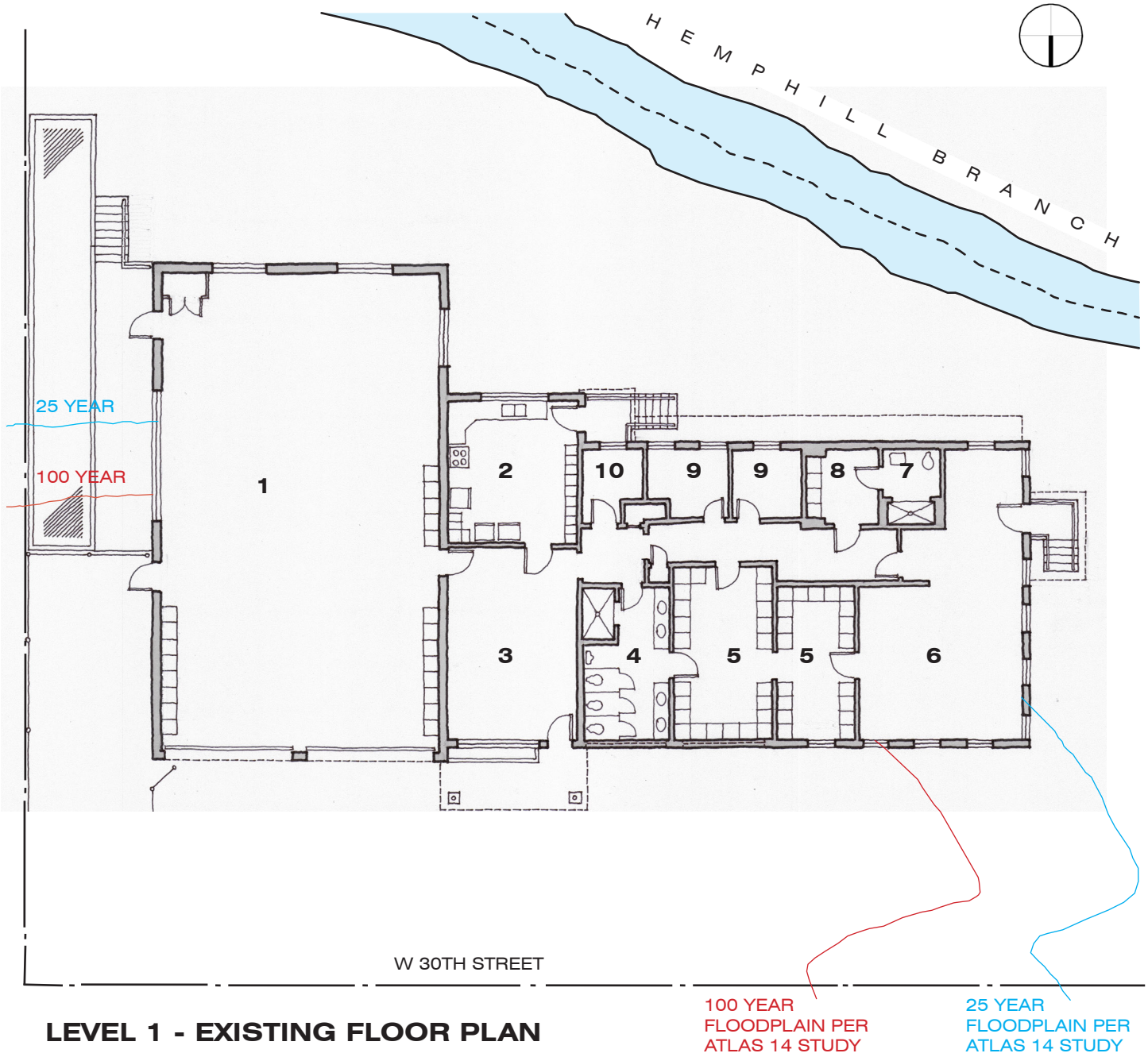

LEVEL 1 - EXISTING FLOOR PLAN

1 APPARATUS BAY
2 KITCHEN/DINING
3 DAY ROOM
4 MEN'S BATHROOM
5 MEN'S LOCKER ROOM
6 SLEEPING QUARTERS
7 WOMEN'S BATHROOM
8 WOMEN'S LOCKER ROOM
9 OFFICER'S QUARTERS
10 MECHANICAL

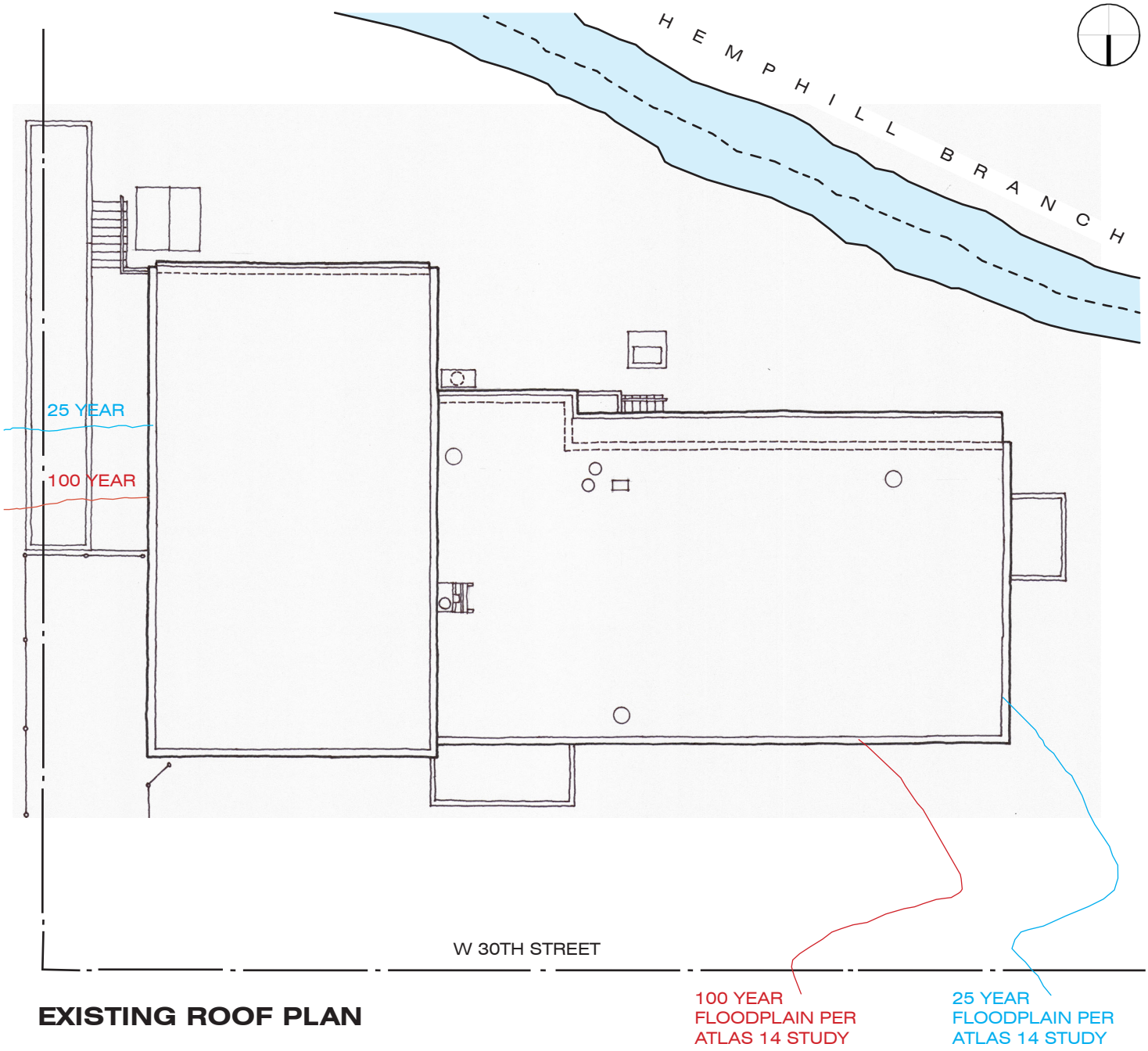

EXISTING ROOF PLAN

B. Structural

1. Summary

a. A site visit was conducted on August 30, 2018 to document the structural systems in place in the facilities of AFD 3 which utilizes a single-story building with brick façade (Fig. 11). The observations made were limited to structural systems constituting the existing apparatus bays only.

2. Foundation

a. The foundation consists of a suspended structural slab on a pier and beam deep foundation system with accessible crawl space grade approximately 50” below the finish floor (Fig. 12, 13, & 14). The suspended floor system at this station was cast-in-place with spandrel beams straddling piers running longitudinally along the truck bays. The slab thickness was measured at approximately 4 inches thick spanning approximately 10ft between 36-inch-wide concrete floor beams.

3. Framing

a. The superstructure consists of single-span open-web steel roof joists bearing on masonry walls for the apparatus bay (Fig. 15).

4. Assessment

a. The current apparatus bay slab has experienced deformational cracks from the newer and heavier fire truck loads. The nature of the cracks is consistent with punching column shears resulting from wheel loads along the slab mid-spans (Fig. 16). We recommend demolishing the foundation and roof systems for the apparatus bays to be replaced by ones suited to handle the current design live loads for fire trucks. This would be contiguous with the new Turnout Gear and Decontamination Rooms to the east of the existing base (Fig. 17).

b. It must be noted also that during the site visit some cracks were observed in the masonry walls at the restroom and lounge area in the administration/living quarters wing to remain. This was not investigated as it is outside the scope of our work. Nevertheless, we believe that the cracks in the wall are likely due to foundation movement rather than of an increase in the local area loads as seen in the apparatus bay. It is also possible that the overloading in the apparatus bay area due to newer and heavier trucks had caused a redistribution of the load effect in the common foundation system. **We recommend that this be further investigated.**

c. Included in Appendix K are two structural investigation reports (Phase 1 and 2) completed in 2017 that assessed the structural floor system capacity at AFD 3 and a geotechnical engineering study dated October 2018. All three reports were provided by the Austin Fire Department in conjunction with the City of Austin.

Fig. 11: AFD 3 - Exterior front elevation.

Fig 12: AFD 3 - Exterior elevation at crawl space access.

Fig. 13: AFD 3 – Crawl space with cast-in-place beams and piers.

Photo 14: AFD 3 – Crawl cast-in-place concrete slab below apparatus bay. Beam and column/pier run longitudinally along the middle of the bay (straddled by fire trucks)

Fig. 15: AFD 3 – Roof framing at apparatus bay. Open web steel joists across masonry walls.

Fig. 16: AFD 3 – Apparatus bay cast-in-place concrete slab. Beam and column/pier run longitudinally along the middle of the bay (straddled by fire trucks). Slab crowns at beam/column line and slopes 1 degree to each slide. Cracks prominent at column location.

Fig 17: AFD 3 – Proposed location of Turnout Gear and Decontamination Rooms east of existing bays.

C. Mechanical

1. Existing Mechanical Systems

a. A wall-mounted axial fan provides ventilation for the apparatus bay by drawing in fresh air through infiltration and exhausting it through an exhaust air louver (Fig. 18). Two (2) gas fired unit heaters suspended from the structure above provide heat in the apparatus bay (Fig. 19). A Plymovent system is installed with exhaust hose drops at the two (2) vehicle bays (Fig. 20). Exhaust is collected in a main exhaust duct overhead and terminates at a wall-mounted exhaust fan on the roof (Fig. 21). The entire livable space is served by a single split system air handler with gas heat. A roof-mounted exhaust fan provides kitchen exhaust while two (2) additional roof-mounted exhaust fans provide general exhaust for the men's and women's lockers.

Fig. 18 - Axial Exhaust Fan in AFD 3 Garage.

Fig. 19 - One of Two Gas Unit Heaters.

Fig. 20 - Plymovent Hose Drop in Garage.

D. Electrical

1. Electrical Service and Distribution

a. The station is served from a pole mounted Austin Energy service transformer with a 240/120V, 3ph. 3W, 225A fused safety switch as the main disconnect. This service has a high-leg phase 'B' (Fig. 22). The meter # is AE 4007955 (Fig. 23).

b. The peak demand on the facility will be provided to Contractor by the Owner.

c. There are a combination of single phase and three phase panelboards throughout the facility.

2. Electrical Lighting

a. The lighting system is comprised of lay-in troffers in the engine bay area.

E. Plumbing

1. Existing Plumbing Systems

a. The anticipated scope of work includes demolition and construction of the garage vehicle bays. Accordingly, only those systems that would be affected have been described herein.

b. The bays currently house a residential washing machine, central air compressor, and floor drains beneath the parked vehicles. It is believed that the waste from the drains currently discharges into the creek behind the station. On the east exterior wall

of the garage are air compressor outlets, hose bibb stations, and the gas meter for the facility.

c. Hot water is currently provided by a 40-gallon, electric storage, 4.5 kW water heater in the back of the building (Fig. 24). This water heater provides hot water for all the showers, kitchen, and clothes washing machines in the building.

Fig. 21 - Plymovent Exhaust Fan.

F. Fire-Suppression Systems

1. Existing Fire-Suppression Systems

a. There is no fire-sprinkler system located in the existing facility.

G. Fire-Alarm Systems

1. Existing Fire-Alarm Systems

a. There is no central fire-alarm system in the existing facility. Only stand-alone smoke alarms in certain areas are provided.

Fig. 23 - Utility Meter.

Fig. 24 - Exterior Gas Water Heater.

Fig. 22 - Main Fused Safety Switch.

A. Architectural

Fig. 1: AFD 22 / EMS 12 – East elevation.

Fig. 2: AFD 22 / EMS 12 – View looking Northwest noting different dates of construction.

1. **Summary**
   a. AFD 22 / EMS 12 is located at the corner of E. Riverside Drive and Faro Drive in southeast Austin. (Fig. 1-2) The 1-story wood frame brick veneer fire station was originally completed in 1975 and is comprised of a two-truck apparatus bay with adjacent living quarters. The style is contemporary modern with an understated presence as a civic building. For example, there is no bold lettering on the façade announcing it is a Fire Station – only the street address number is posted vertically at the public entrance.
   b. In 1984, the living quarters for an EMS Station (Fig. 3) were added to the southwest corner of the fire station, followed in 1997 with a one-truck apparatus bay for EMS vehicles and equipment (Fig, 4). The most recent addition to the station, a Women's Locker Room/Bathroom and Telecom Closet, was completed in 2016 (Fig. 5).
   c. The station complex is home to Engine Company #22, Ladder Company #22 and EMS #12. Similar to Fire Station #3, the concrete floor structural system in the apparatus bay is not capable of safely supporting the weight of the newer engine and ladder trucks, so the large open space is used for smaller fire department vehicles, firefighter lockers, a workout area, a washer/dryer, and storage for miscellaneous equipment including a pickle ball* net. (Fig. 6) A very small concrete area behind the apparatus bay serves as a grilling area. (Fig. 7) The heavier vehicles must now park continually exposed to the weather in the driveway in front of the apparatus bay and in front of the station's public entrance. A chain link fence offers a small degree of security.
   d. The living quarters' area includes a Day Area, a communal kitchen, sleeping quarters, locker rooms, bathrooms, and several small offices. (Fig. 8-13)
   e. During the course of investigating the possibility of adding a second level to the living quarters wing, serious moisture issues and the resultant corrosive damage to the underlying structure were discovered beneath the station. These discoveries are described in detail in the structural narrative that follows this section of the DCM. Based on these discoveries, as well as the findings of third party forensic reports included in Appendix K, it is the recommendation of the DCM A/E Team that the entire AFD 22 / EMS 12 be demolished and rebuilt.

Fig. 3: AFD 22 / EMS 12 – EMS living quarters

Fig. 4: AFD 22 / EMS 12 – EMS apparatus bay.

Fig. 5: AFD 22 / EMS 12 – Women's locker room.

Fig. 6: AFD 22 / EMS 12 – Apparatus bay.

f. For the Existing Floor Plan of AFD 22 / EMS 12 hand drawn to scale showing the current layout of spaces, please refer to the plan that immediately follows this section.

g. Pickleball is a paddle sport that combines elements of badminton, tennis, and table tennis. Two or four players use solid paddles made of wood or composite materials to hit a perforated polymer ball, similar to a Wiffle Ball, over a net. Pickleball is a very popular sport among fire fighters in the Austin Fire Department.

Fig. 7: AFD 22 / EMS 12 – Rear of building.

Fig. 8: AFD 22 / EMS 12 – Day room.

Fig. 9: AFD 22 / EMS 12 – Communal kitchen.

Fig. 10: AFD 22 / EMS 12 – Sleeping quarters.

Fig. 11: AFD 22 / EMS 12 – Men's locker room.

Fig. 12: AFD 22 / EMS 12 – Women's locker room.

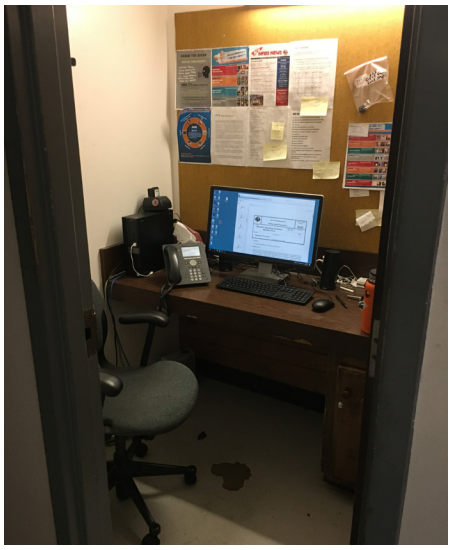

Fig. 13: AFD 22 / EMS 12 – Small office.

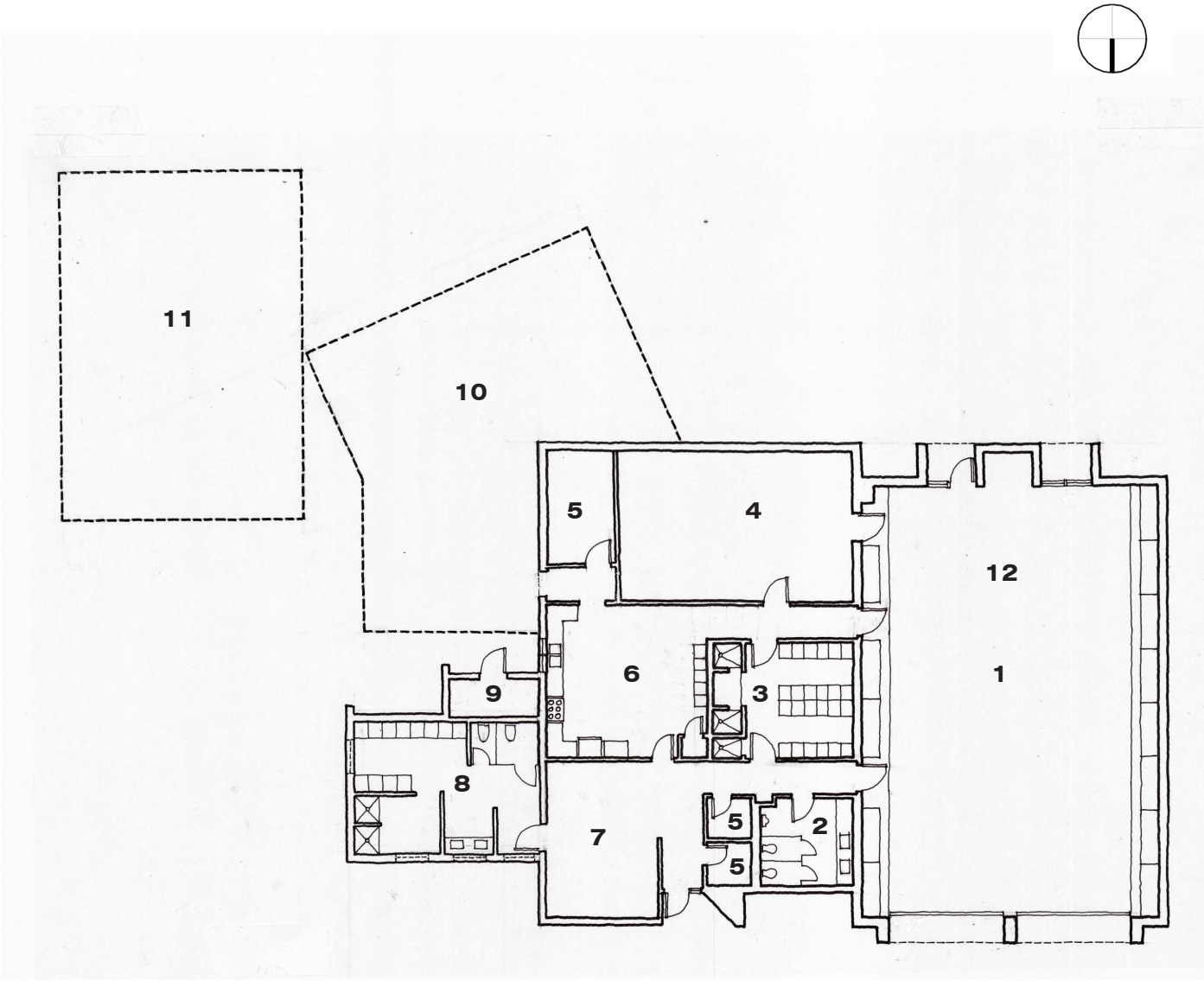

FARO ROAD

LEVEL 1 - EXISTING FLOOR PLAN

1	APPARATUS BAY	6	KITCHEN/DINING	9	STORAGE
2	MEN'S BATHROOM	7	DAY ROOM	10	EMS ANNEX
3	MEN'S LOCKER ROOM	8	WOMEN'S LOCKER ROOM AND BATHROOM	11	EMS APPARATUS BAY
4	SLEEPING QUARTERS			12	WORKOUT AREA
5	OFFICE				

B. Structural

1. Summary

a. On September 5 and 27, 2018, site visits for structural assessments were performed at the premises of AFD 22 / EMS 12. The northernmost one-story building which houses the Fire Department was completed in 1975. It has since had two later EMS Station additions (Fig. 2 & 14).

2. Foundation

a. The foundation is a deep foundation system with drilled piers supporting cast-in-place spandrel beams. Across these beams span precast "C" panels over which a 3 ½" topping slab was poured. The crawl space depth varies from approximately 56 inches at the access point on the north side of the Apparatus Bays to less than 36 inches at the far side where a later addition continued in a similar fashion albeit inaccessible. There are no cross-ventilation openings/hatches. The stormwater drain line for the crawl space is clogged necessitating a sump pump to be placed at the access point (Fig. 15 & 16). Droplets of water were observed below the deck from leaks above the slab or condensation from moisture build-up in the crawl space (Fig. 17 - 24). Cracks were observed in the apparatus bay slab (Fig. 25).

3. Framing

a. The framing for the building consists of 2x4 wood-framed walls with brick veneer supporting 2x10 rafters over the administration and sleeping quarters. The apparatus bays are framed over with Truss Joist rafters (Fig. 26). At exterior wall openings, structural steel pipe columns in stud walls transfer concentrated point loads from structural steel wide flange beams/ lentils to the concrete foundation beams.

4. Assessment

a. There are two main concerns about the entire foundation system at AFD 22 / EMS 12. The first is the presence of cracks in the current apparatus bay resulting from the newer and heavier fire truck loads. The cracks are widely distributed and do not appear to have any pattern (Fig. 27). It is not apparent if the cracks are limited to the topping slab above the precast C deck panels or continued to the substructure below.

b. Secondly there is visible evidence of corrosion of the steel reinforcement in a few webs and flanges of C panels that constitute the slab for the habitable and conditioned spaces. This could be the result of the presence of moisture either from leaks above the slab or pooling of storm water run-off accumulating in the crawl space below. The structural capacity of the precast slab system in this area may therefore be compromised as a result. Above the slab, the effect of the moisture conditions is evidenced in the Day Room area where there is spalling of the concrete cover and reports of difficulties maintaining a tiled floor (Fig. 20). There is also potential for other non-structural safety concerns such as health-related issues generated by moisture effects.

c. **Based on the above observations, we would not recommend continuing with the proposed renovation and remodel work as planned because of the extent and magnitude of structural deficiencies that must be addressed prior to any future work.** The existing foundation system (both in the apparatus bay and administrative spaces) are structurally compromised in its performance under design loads. It is our opinion that repairs on existing foundation systems in addition to the new renovation and remodel would not be cost effective as this would involve an extensive characterization of the extent of deterioration of the corrosion defects and expensive repair of a foundation system built with a discontinued precast slab system. More so, the repairs would necessitate the removal or compromising of the impeding superstructure, increasing the cost of the project.

d. If a repair route is undertaken for the administrative/ living quarters' foundation, this would be an added cost to addressing the conditions of moisture and the replacement of the apparatus bay area foundation. In this case, Immediate measures are needed to address the moisture conditions noted above prior to the proposed remodel construction work. This includes improving the drainage around the building and the installation and provision of providing ventilation under the building.

e. The foundation (and hence, the superstructure) system for the apparatus bays would be demolished to construct new replacement and additional truck bays for current design loads.

f. The current offices and adjacent living spaces share a common foundation system. New and partial foundation systems installed would likely experience relative movement which must be accommodated by either separation with expansion joints or a hard-tie of the new to the existing system. A new geotechnical investigation report (noted below) includes information on the expected settlement of any new structure and how much settlement has already occurred in the existing structure, along with the expected relative movements.

g. Included in Appendix K are two structural investigation reports (Phase 1 and 2) completed in 2017 that assessed the structural floor system capacity at AFD 22 / EMS 12 and a geotechnical engineering study dated October 2018. All three reports were provided by the Austin Fire Department in conjunction with the City of Austin.

Fig. 14: AFD 22 / EMS 12 – Exterior front elevation with fire trucks parked outside apparatus bay.

Fig. 15: AFD 22 / EMS 12 – Crawl space access hatch and location of sump pump.

Fig. 16: AFD 22 / EMS 12 – Crawl space access hatch and sump pump north of building and adjacent to existing apparatus bays.

Fig. 17: AFD 22 / EMS 12 – Crawl space below habitable/conditioned spaces with water droplets on webs of precast concrete C panels.

Fig. 18: AFD 22 / EMS 12 – Crawl space at end habitable/conditioned spaces adjacent to later building addition/expansion. Damp conditions and apparent failure of end beam? Need verification.

Fig. 19: AFD 22 / EMS 12 – Corrosion and spalling of concrete cover at the inside face of a precast C panel web.

Fig. 20: AFD 22 / EMS 12 – Crawl space below habitable/conditioned spaces with water droplets on web and flange of precast concrete C panels. Corrosion of web/flange steel reinforcement visible through sprayed-on insulation.

Fig. 21: AFD 22 / EMS 12 – Crawl space under precast concrete C panels at apparatus bay area.

Fig. 22: AFD 22 / EMS 12 – Crawl space below habitable/conditioned spaces with water droplets on webs of precast concrete C panels. Spalled concrete cover and corrosion of web reinforcement.

Fig. 23: AFD 22 / EMS 12 – Corrosion and spalling of concrete cover at the inside face of a precast C panel web.

Fig. 24: AFD 22 / EMS 12 – Corrosion at the outside face of a precast C panel web.

Fig. 25: AFD 22 / EMS 12 – Cracks in apparatus bay (topping) slab.

Fig. 26: AFD 22 / EMS 12 – Roof joists framing and bearing wall verification.

Fig. 27: AFD 22 / EMS 12 – Cracks in apparatus bay slab – fire trucks no longer parking in apparatus bays.

Fig. 28: AFD 22 / EMS 12 – Spalling of concrete in floor slab at the lounge area.

C. Mechanical

1. Existing Mechanical Systems

a. The living/sleeping quarters, kitchen, and men's lockers are served by an American Standard 5-ton heat pump (Fig. 29). Both the indoor and outdoor units were manufactured in 2009.

b. In the kitchen, a ducted, residential-type range hood is installed above an electric, commercial-type range/oven combo (Fig. 30).

c. The women's lockers are served by a Mitsubishi heat pump and cassette unit (Fig. 31 & 32).

d. The equipment bay is ventilated by four (4) rooftop exhaust fans that draw outside air into the bay through outside air louvers and exhaust it up through the roof. The bay is also fitted with a Plymovent exhaust system (Fig. 33 & 34). Two (2) unit heaters are suspended from structure above in the equipment bay to provide heat (Fig. 35).

Fig. 29 - Outdoor & Indoor Unit Serving Living/ Sleeping Quarter and Kitchen.

D. Electrical

1. Electrical Service and Distribution

a. The station is served from a pad mounted Austin Energy service transformer with two meters. One meter serves the fire station. The other meter serves the EMS station. The fire station has a 208/120V, 3ph. 4W, 400A main distribution panel with a 300A main circuit breaker. The EMS station has a 208/120V, 3ph. 4W, 250A main distribution panel with a 225A main circuit breaker. The installation of the service transformer and main distribution panels are in violation of the NEC. The fire station meter # is AE 6156049 (Fig. 36). The EMS meter # is AE 4010048 (Fig. 37).

b. The peak demand on the facility will be provided to Contractor by the Owner.

c. There are a combination of single phase and three phase panelboards throughout the facility.

2. Electrical Lighting

a. The lighting system is comprised of lay-in troffers in the engine bay area.

Fig. 30 - Electric Range/Oven Combo and Hood.

Fig. 31 & 32 - Mitsubishi Heat Pump and Cassette Unit Serving Women's Lockers.

Fig. 33 & 34 - Plyovent and Ceiling Exhaust Grille in Equipment Bay.

Fig. 35 - Unit Heater in Equipment Bay.

Fig. 36 - Utility Meter Fire Station.

Fig. 37 - Utility Meter EMS.

E. Plumbing

1. Existing Plumbing Systems

a. There is currently no natural-gas piped to any equipment in the building, however the Owner has indicated that the pipe stub-up outside of the main front entry is a gas line that was intended to be utilized in the future.

b. Domestic water is provided through an NPS 2 site water main from East Riverside Drive.

c. Domestic hot water currently appears to be provided by an electric, tankless water-heater in a closet off the kitchen (Fig. 38).

d. There is currently a single sanitary interceptor indicated on drawings to be a combined sand and grease trap. There are no drains located in the garage bays, however there are soil-and-vegetation filled trench drains located in the outdoor drive that are shown to be routed through this interceptor.

e. The crawl space is currently unable to drain adequately. A sump pump has been provided at the access well outside the north end of the garage, with the pump discharge routed to the grassy area north of the building (Fig. 39).

Fig. 38- Tankless Electric Water Heater.

Fig. 39 - Crawl Space Sump Pump Discharge.

F. Fire-Suppression Systems

1. Existing Fire-Suppression Systems

a. There is no fire-sprinkler system located in the existing facility.

G. Fire-Alarm Systems

1. Existing Fire-Alarm Systems

a. There is no central fire-alarm system in the existing facility. Only stand-alone smoke alarms in certain areas are provided.

7 | Proposed Conceptual Projects

A. Program Design Goals

1. Refer to Appendix E - Prototype Programming

B. General Guidelines

1. Sustainable Design (LEED Practices) & Energy Efficiency

a. With the goal of improving building energy efficiency, the City of Austin has established a minimum LEED 'Silver' certification target for AFD 1 / EMS 6 and AFD 22 / EMS 12. A higher LEED target (Gold) is desired and may be achievable after the design team has conducted a LEED v4 Preliminary Checklist for each site and discussed with the PM and Owner based on the anticipated scope of work to be covered under the design (architectural/interiors, mechanical, electrical, plumbing, landscape, fire protection and civil construction, and commissioning). These projects are to pursue the LEED BD+C (Building Design & Construction) – New Construction (NC) rating system for AFD 22 / EMS 12 and a further analysis to determine the best rating system appropriate for AFD 1 / EMS 6. The D-B team shall follow LEED v4 or the most current version of LEED in effect at the time design

b. For AFD 22 / EMS 12, Roof-mounted photovoltaics (PV) should be considered to achieve greater energy savings and help offset a portion of the energy costs.

c. Inclusion of a LEED AP (accredited professional) Consultant on the project team is expected.

d. Resources & Other Useful Links:

- https://new.usgbc.org/leed-v4
- https://www.usgbc.org/credits
- https://www.usgbc.org/resources/grid/leed
- https://www.usgbc.org/store/products/publications
- https://www.usgbc.org/help

e. Basic sustainability standards similar to LEED will be expected to be adhered to for the design and construction of the replacement bay on Fire Station No. 3 as applicable to the scope of work.

C. Design & Construction Phasing/Planning

1. The D-B may propose a schedule and phasing plan other than what is included in this DCM with the coordination and approval of the Owner and Project Manager to either accelerate schedule or gain efficiencies of scale in the constructability to the benefit of the construction costs.

2. For design & construction phasing schedules for each proposed project, see Chapter 9 - Conceptual Project Estimates.

A. Feasibility Test Fit Drawings of Proposed Conceptual Project

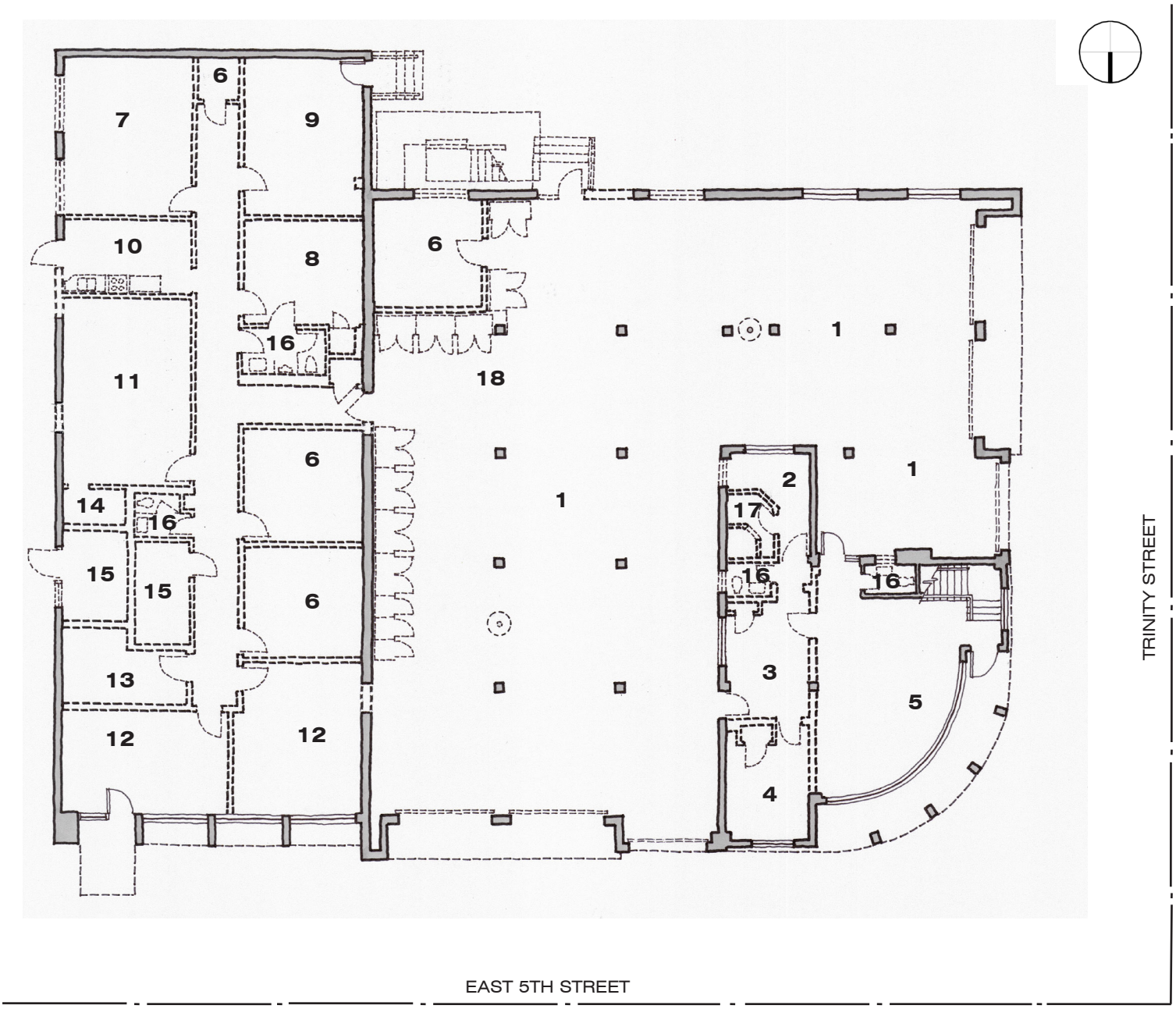

LEVEL 1 - DEMO FLOOR PLAN

1 APPARTAUS BAY
2 EMS OFFICE
3 EMS KITCHENETTE
4 EMS DAYROOM
5 DAY ROOM
6 STORAGE
7 COMMANDER'S OFFICE
8 COMMANDER'S SLEEPING QUARTERS
9 WORKOUT ROOM
10 KITCHEN
11 CONFERENCE ROOM
12 FIRE MUSEUM
13 FIRE MUSEUM OFFICE
14 COMMUNICAT'N CLOSET
15 MECHANICAL
16 BATHROOM
17 SHOWER
18 WORKOUT AREA
19 TURNOUT GEAR LOCKERS
20 SLIDING POLE

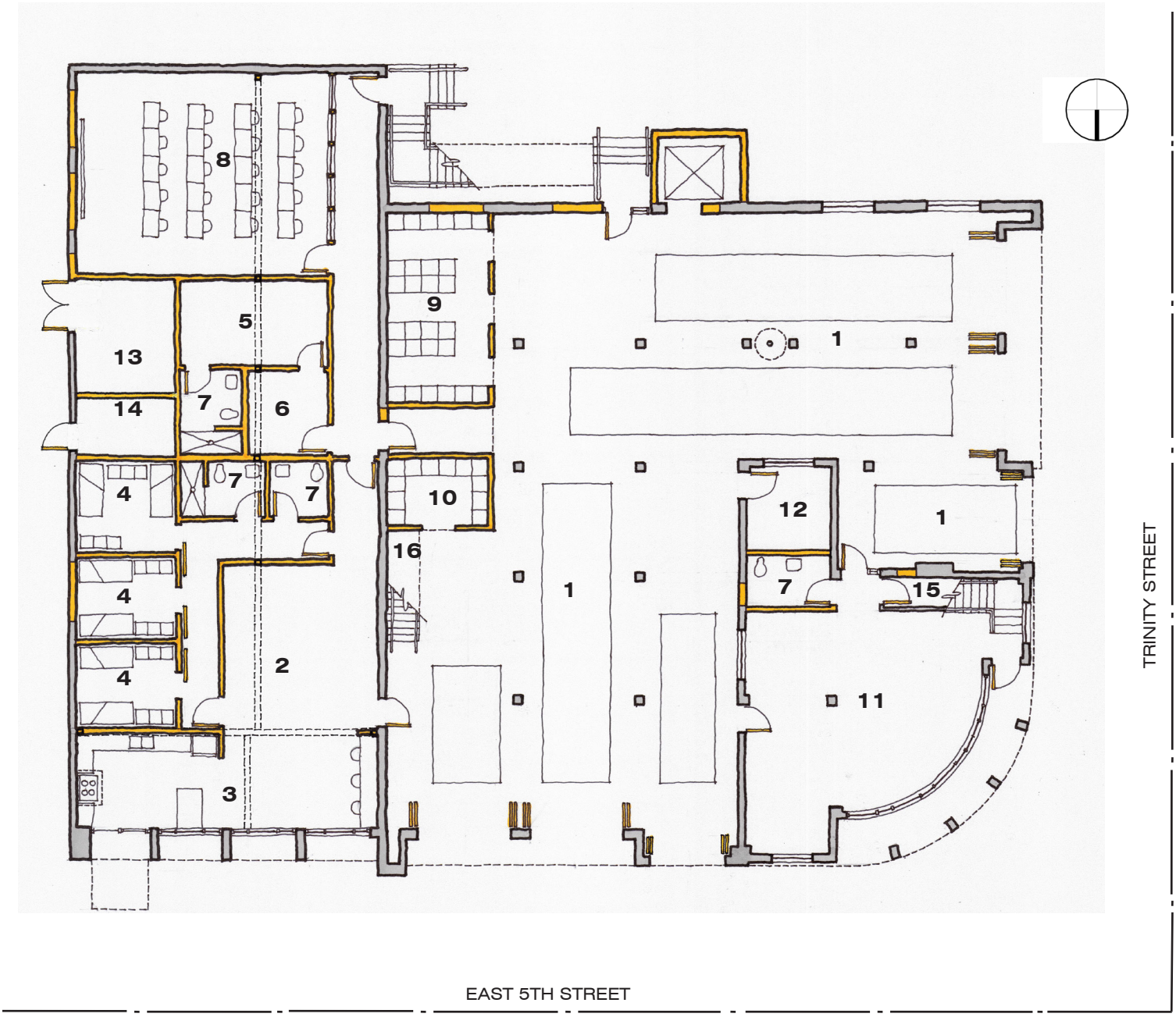

LEVEL 1 - PROPOSED FLOOR PLAN

1 APPARATUS BAY
2 EMS DAY ROOM
3 EMS KITCHEN & DINING
4 EMS SLEEPING QUARTERS
5 COMMANDER'S SLEEPING QUARTERS
6 COMMANDER'S OFFICE
7 BATHROOM
8 TRAINING CLASSROOM
9 AFD TURNOUT GEAR
10 EMS TURNOUT GEAR
11 WORKOUT ROOM
12 SHOP
13 MECHANICAL
14 COMMUNICATION ROOM
15 MOP SINK
16 MEZZANINE STORAGE (ABOVE TURNOUT GEAR)

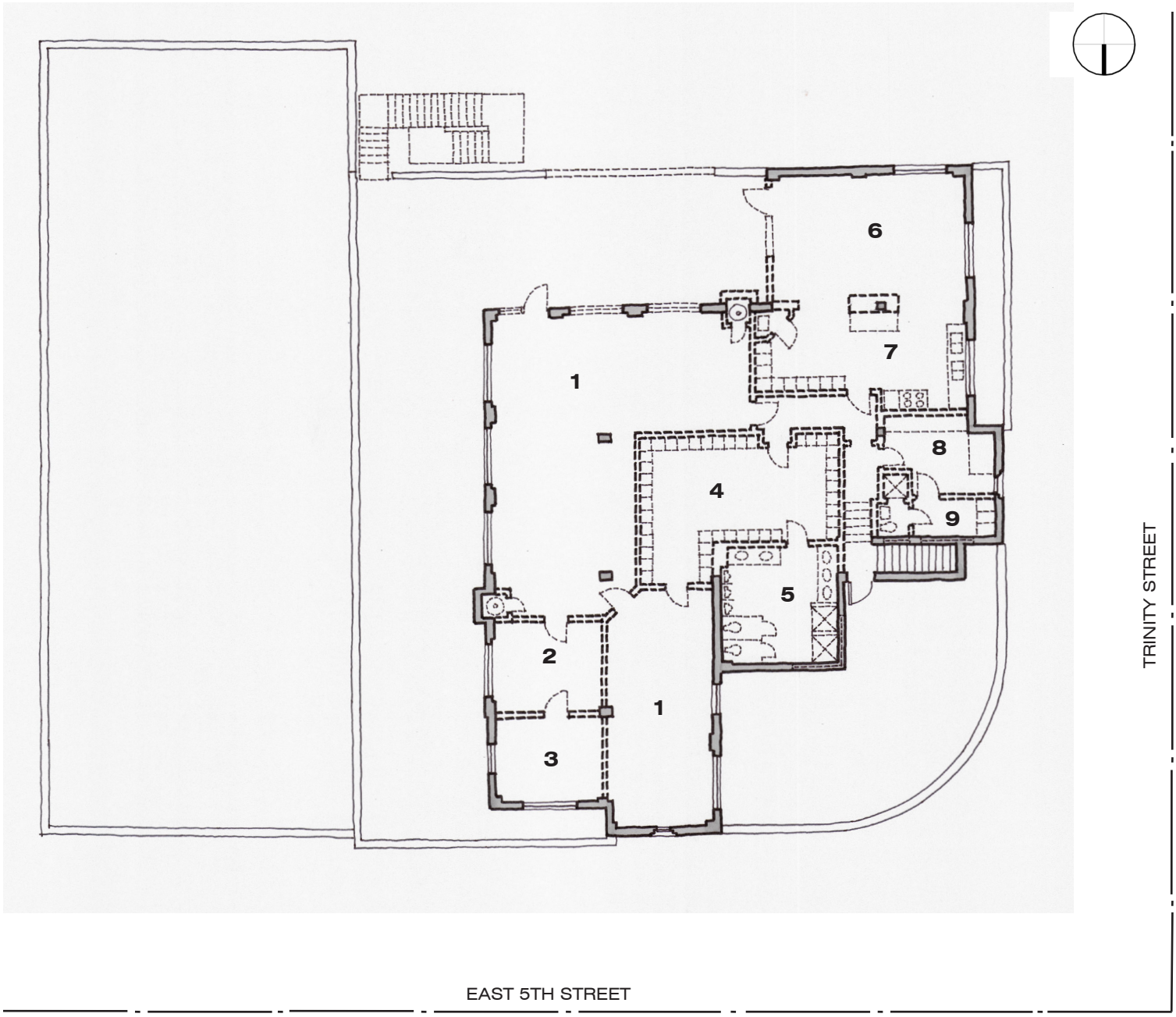

LEVEL 2 - DEMO FLOOR PLAN

1 SLEEPING QUARTERS
2 OFFICE
3 OFFICER'S QUARTERS
4 MEN'S LOCKER ROOM
5 MEN'S BATHROOM
6 DINING
7 KITCHEN
8 STUDY
9 WOMEN'S LOCKER ROOM AND BATHROOM
10 MOP SINK

LEVEL 2 - PROPOSED FLOOR PLAN

1 SLEEPING QUARTERS
2 BATHROOM
3 KITCHEN
4 DINING
5 STUDY
6 DAY ROOM
7 PATIO
8 PANTRY w/ REF. / FREEZER

B. Narratives of Proposed Conceptual Project

1. Architectural

For the Architectural Feasibility Test Fit drawings of the Proposed Conceptual Project, refer to Demolition and Proposed Floor Plans for Levels 1 and 2 on the following pages, as well as the keynoted plans for AFD 1 / EMS 6 in Chapter 9 - Conceptual Project Estimate.

a. Phasing of Renovation Work

The proposed renovation of AFD 1 / EMS 6 will require a multi-phase construction schedule in order to maintain Fire and EMS protection for the area of downtown Austin normally covered by these two stations. The construction phasing will occur as follows:

1) Phase 1: Historic Fire Station Renovation

   a) Phase 1a: Both Fire Department and EMS personnel will move totally out of the historic 1938 fire station building. EMS 6 and those Fire Department companies selected to remain downtown will move into the Annex after it has been readied as temporary quarters.

   b) Phase 1b: Interior demolition of the Levels 1 and 2 of the historic fire station building will be followed by the full scope of renovation work as described in the narrative below and as noted in the keynoted floor plans for AFD 1 / EMS 6 in Chapter 9.

   c) Phase 1c: Fire Department companies and EMS 6, will move back into the newly renovated historic fire station.

2) Phase 2: Annex Renovation

   a) Phase 2a: The Annex will be gutted and renovated as described in the narrative below and as noted in the keynoted floor plans for AFD 1 / EMS 6.

   b) Phase 2b: EMS 6 will move back into the renovated Annex.

b. Overview of proposed scope of work (for Historic Fire Station and Annex)

1) Following the abatement of asbestos and lead, the demolition of interior walls, ceilings, doors and built-in furnishings will occur, as well as all existing HVAC, electric and plumbing systems according to the phasing outlined above. Items such as doors and interior windows, if salvageable, should recycled for reuse. Exterior items, such as stairs, windows and doors - including the motorized

overhead truck bay doors - will also be removed at the appropriate time, and, if salvageable, considered for recycling. Note that the contents of the Austin Fire Museum will be permanently relocated to another Austin Fire Department Station.

2) The proposed scope on the lower level of the historic fire station includes the creation of new spaces such as ventilated AFD and EMS Turnout Gear rooms, workshop, workout room, TAS-compliant restroom and mop sink room. Additional mezzanine storage is possible above the new turnout gear rooms. For handicap access to the upper level, a new MRL (machine room less) traction elevator will be installed on the south face of the building. A new exterior stair, to replace the original one, is proposed not only for direct access to and from the roof deck area above, but for training purposes, as well. For each of the six apparatus bay door openings, a new industrial grade, high speed bi-fold door is needed. New windows and exterior doors – either matching, or being sympathetic to, the original design - will require review and approval by the Austin Historic Commission. All new windows will be operable and include insulated glass, screens and locks.

3) New scope proposed for the front half of the Annex (i.e., the half closest to Fifth Street) includes updated living quarters for the personnel of EMS 6. This will include a new kitchen, dining area, day room, study, sleeping quarters (two beds per room) and bathrooms (one per two bedrooms). For the back half, new living quarters for the Commander, a Communication Room and Mechanical Room (both with exterior access) and a classroom are proposed.

4) The upper level of the fire station is proposed to house the remodeled living quarters for the three Fire Department companies operating from this downtown location. There are eight bedrooms (two beds per room) and four bathrooms (one per two bedrooms) for the amount of personnel. A large communal kitchen with four separate pantry rooms, multiple dining areas, a day room and study are all proposed. On the roof, a large paved patio area - with shade structure - is planned for outdoor grilling, eating and general socializing.

5) To complete the renovation and extensive upgrade of AFD 1 / EMS 6, the entire brick exterior will be thoroughly cleaned and restored after gaining approval from the Austin Historic Commission and all other historical entities having jurisdiction over changes to the exterior. Refer to Appendix B for basic information from the National Parks Department regarding the impact of the station being placed on the National Register of Historic Places.

c. For more detailed descriptions of recommended finishes, materials, ceilings, flooring, doors, windows, signage, etc., refer to "Architectural Standards" in Chapter 8 – Technical Criteria and Standards. Also refer to the programming documents in Appendix E.

d. For more detailed descriptions of the proposed structural, MEP and fire suppression scope, refer to the narratives for these disciplines included in this Chapter and in Chapter 8.

2. Structural

a. Structural Scope

1) New second floor addition at Dining Area and relocation of upper run of existing interior stair in historic building.

2) New elevator and exterior stairs on the south side of the historic building.

3) New interior stairs in Apparatus Bay to access Mezzanine Storage over Turnout Gear Rooms in historic building.

4) Modification of interior load-bearing walls in one-story Annex.

b. Summary of Proposal

1) The proposed 2nd floor addition at the south end of the existing historic building is considered feasible. The proposed demolition work shall ensure that no bearing walls and columns are compromised during the remodeling work. (See floor plans in Appendix C). The use of lighter construction materials such as light-gauge steel framing or wood should be utilized in the remodel construction. All new structural wall and roof systems for the second story addition shall bear on the existing framing systems of concrete frames.

2) It is recommended that the new elevator have a new foundation system based on a new geotechnical soil investigation report and recommendations.

3) The renovation of the one-story Annex building for living quarters, offices and training classroom will involve the modification of interior load-bearing masonry walls. New beams and columns will be needed to replace parts of the walls to be removed. New columns should be placed along existing interior grade beam/load-bearing wall location where possible, and the supporting foundation system verified for capacity to sustain resulting concentrated loads.

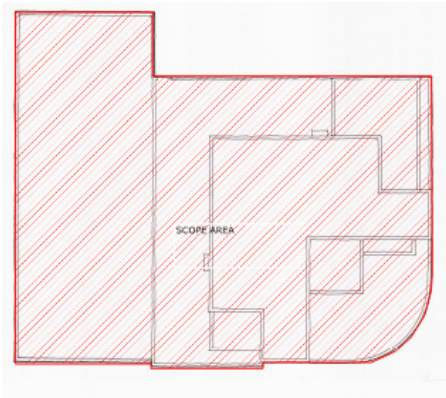

Fig. 1: AFD 1 / EMS 6 Proposed Mechanical Scope Area

3. Mechanical

a. Mechanical Scope

1) The scope of work includes extensive renovation of the entire fire station (Fig. 1). All existing mechanical equipment, ductwork, piping and appurtenances shall be demolished. New mechanical systems and equipment, including new ductwork, piping and air devices shall be provided to accommodate the new architectural layout and shall be installed per current codes and best practices. Living quarters shall be zoned independently to provide individual temperature control. Single zone systems are acceptable for the kitchen and dining area, the day room, and locker rooms, however individual units must be provided for each zone (i.e. kitchen and dining, day room, lockers).

2) A new kitchen exhaust hood and roof mounted grease exhaust fan shall be provided. New general exhaust for locker rooms and restrooms shall be provided. A new Plymovent system shall be provided in the apparatus bay, with exhaust hose drops at each vehicle. Ventilation shall be provided by drawing outside air in through new outside air louvers with a new axial exhaust fan and exhaust air louver in the apparatus bay. Exhaust shall also be provided in the bunk gear room to assist in drying wet equipment. New unit heaters shall be provided in the apparatus bay to provide heat.

4. Electrical

a. Electrical Scope

1) Remove and replace the entire electrical distribution system.

2) Provide and install a natural driven emergency generator.

3) Provide new power distribution system to adequately serve the architectural modifications.

4) Provide new lighting system and controls to adequately serve the architectural modifications.
5) Provide new infrastructure for a new dispatch system, telecommunication and Audio-visual systems.
6) Provide dedicated electrical panel to serve the engine bay area.

5. Plumbing

a. Plumbing Scope

1) The scope of work includes extensive renovation of all areas other than the vehicle bays, where the slab is to remain. The existing plumbing fixtures, domestic hot and cold water, and sanitary waste and vent piping inside the building shall be demolished as required, with new piping extended to the new fixtures and equipment.
2) If a new fixture unit analysis shows that the NPS 1-1/2 domestic-water entry line is undersized, replace the domestic water main with a new, larger one as required.
3) Since it is the Owner's intent that the garage floor not be cut in any way, no new drains or associated sand-and-oil interceptor will be provided to service the garage.
4) There is currently no grease trap. A grease trap sized in accordance with the City of Austin Grease Trap Sizing Criteria shall be provided with the new design.
5) Even though there is an abandoned solar water-heating panel on the roof, solar water heating is not currently required by the Owner. It is anticipated that both tank-type water heaters will be demolished in support of the new building layout. Gas-fired, tankless water heaters are recommended in their place, to be coordinated with Texas Gas Company for any additional capacity required. Gas piping shall also be extended to any new gas-fired HVAC equipment as needed.

6. Fire-Suppression Systems

a. Fire-Suppression Scope

1) There is no fire-sprinkler system located in the existing facility. A fire-sprinkler system utilizing a new main off the city water supply shall be provided, with coverage extended throughout.

7. Fire-Alarm Systems

a. Fire-Alarm Scope

1) An automatic fire-alarm system with central control panel shall be provided to replace the existing stand-alone devices. Audible notification shall be provided throughout, and visual notification shall be provided throughout all areas required by ADA and Texas Accessibility Standards.

A. Feasibility Test Fit Drawings of Proposed Conceptual Project

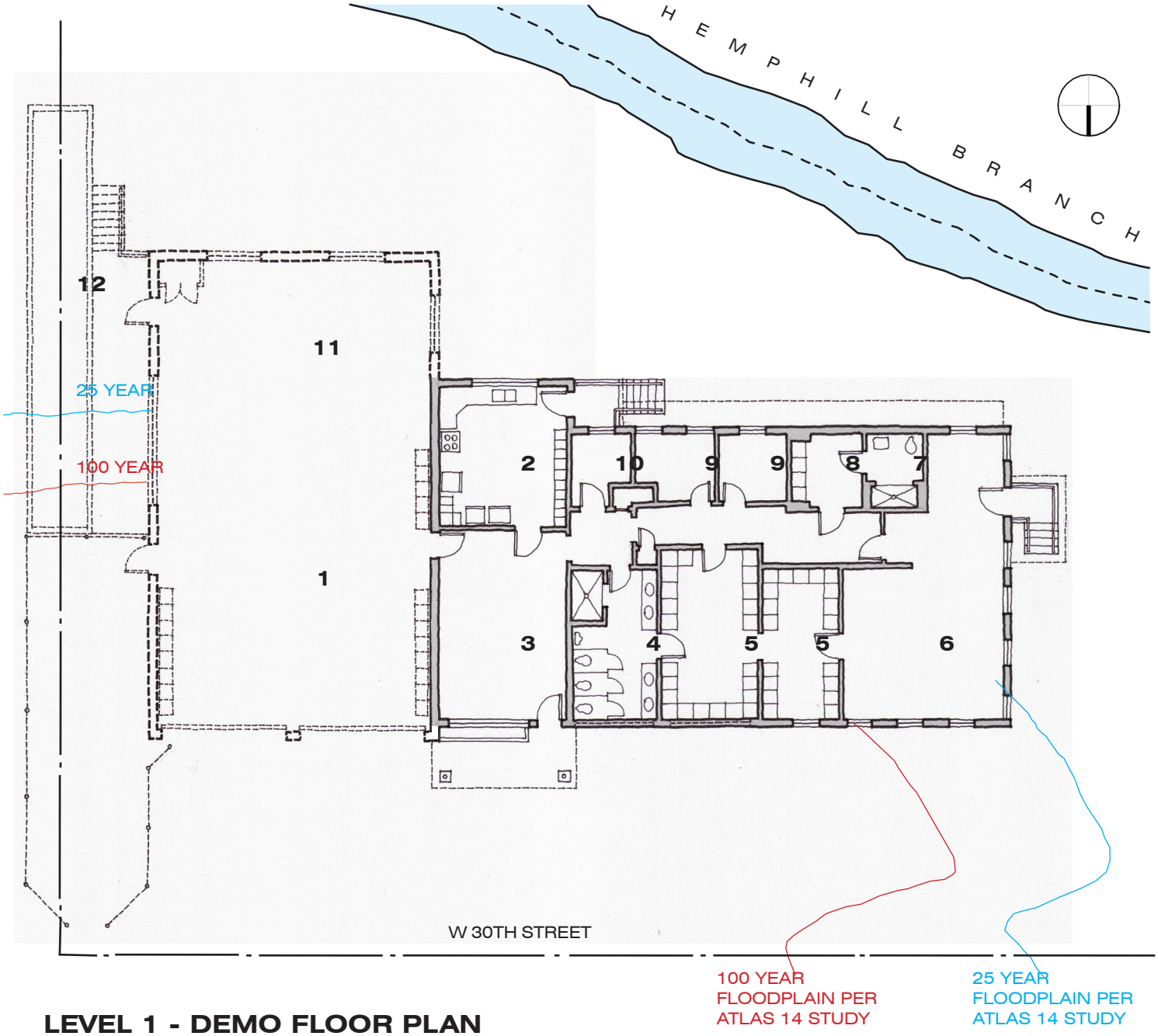

LEVEL 1 - DEMO FLOOR PLAN

1 APPARATUS BAY
2 KITCHEN/DINING
3 DAY ROOM
4 MEN'S BATHROOM
5 MEN'S LOCKER ROOM
6 SLEEPING QUARTERS
7 WOMEN'S BATHROOM
8 WOMEN'S LOCKER ROOM
9 OFFICER'S QUARTERS
10 MECHANICAL
11 WORKOUT AREA
12 HOSE DRYING RACK

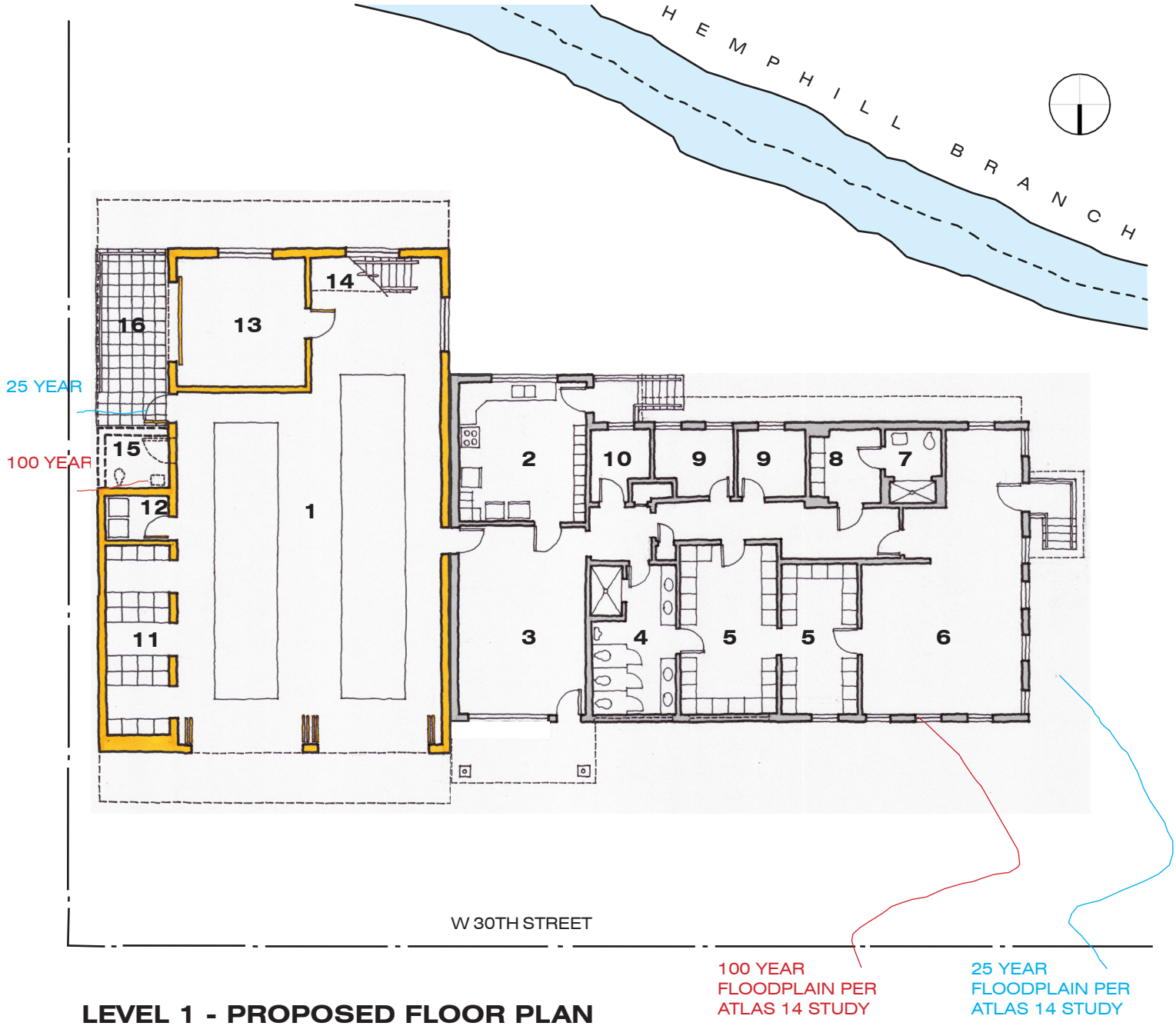

LEVEL 1 - PROPOSED FLOOR PLAN

1 APPARATUS BAY
2 KITCHEN/DINING
3 DAY ROOM
4 MEN'S BATHROOM
5 MEN'S LOCKER ROOM
6 SLEEPING QUARTERS
7 WOMEN'S BATHROOM
8 WOMEN'S LOCKER ROOM
9 OFFICER'S QUARTERS
10 MECHANICAL
11 TURNOUT GEAR
12 DECON. ROOM
13 WORKOUT ROOM
14 MEZZANINE STORAGE (ABOVE WORKOUT ROOM GEAR)
15 POSSIBLE BATHROOM
16 PATIO

B. Narratives of Proposed Conceptual Project

1. Architectural

For the Architectural Feasibility Test Fit plans of the Proposed Conceptual Project, refer to the Demolition and Proposed Floor Plans on the following pages, as well as the keynoted plans for AFD 3 in Chapter 9 – Conceptual Project Estimate.

a. Phasing of proposed renovation

1) No phasing is required.

b. Overview of proposed scope of work

1) Following the abatement of asbestos and lead in the existing two-truck apparatus bay, the demolition of the apparatus bay building will commence. Demolition will include all concrete structural foundations directly under the apparatus bay portion of the building. However, it is important to note that the structural engineer's narrative (following next in this Chapter) proposes that the shared wall between the existing apparatus bay and living quarters' wing – and its foundation – be retained to the height of the adjacent walls of the living quarters' wing. Also to be demolished are the concrete flat work and hose drying rack on the east side of the apparatus bay to make room for new construction.

2) Due to the building's location in the City's newly-adopted interim 25 year flood plain (refer to Chapter 5 - Site Analysis), the Civil Engineer for this DCM is recommending that the foot print of the new apparatus bay be designed to overlay exactly onto the footprint of the original bay. This restriction should not preclude adding square footage to the east side of the new apparatus bay that is not in either the new interim 25 year or 100 year flood plains. What needs to be investigated by the D-B is if the City will allow additional square footage in the 100 year flood plain only. Note that the proposed conceptual floor plan shows a new bathroom adjacent to the Turnout Gear Room dashed in on the drawing to indicate this possibility.

3) The proposed scope for the new apparatus bay includes a new apparatus bay with a deep roof overhang, two new industrial grade electrically-operated high-speed bi-fold truck bay doors, a mechanically-ventilated turnout gear room with lockers, a decontamination room with washer and dryer, a workout room with mezzanine storage

above, and, as previously mentioned, a TAS-compliant bathroom for the apparatus bay that might be allowed in the 100 year flood plain. Also proposed is an outside paved patio area (shaded by the roof above) with gas hook up for grilling.

c. For more detailed descriptions of recommended finishes, materials, ceilings, flooring, doors, windows, signage, etc., refer to "Architectural Standards" in Chapter 8 – Technical Criteria and Standards. Also refer to the programming documents in Appendix E.

d. For more detailed descriptions of the proposed structural, MEP and fire suppression scope, refer to the narratives of these disciplines included in this Chapter and in Chapter 8.

2. Structural

a. Structural Scope

1) Demolish existing overloaded truck bays.

2) Construct new apparatus bays.

b. Summary of Proposal

1) The existing structural systems shall be demolished down to the foundation piers for the apparatus bay area. The administration/living quarters side of the building shall be preserved together with the separating wall and its foundation (Fig. 1). Temporary shoring of the existing building will be required to stabilize the administrative section of the station to remain. A new foundation system of piers and elevated beams and slabs for the new apparatus bay shall be constructed adjacent to the existing remaining administration building.

2) A new geotechnical investigation report for the site investigation was conducted in October 2018 and provides recommendations for the new foundation along with the minimum clearances required between piers. A copy of this report is included in Appendix K. The new apparatus bay foundation system installed would likely experience relative movement which must be accommodated by either separation with expansion joints or a hard-tie of the new to the existing system. The new geotechnical investigation report includes information on the expected settlement of the proposed new structure. The geotechnical engineer shall review the final proposed plan to validate correlation of the new proposed design loads to the design recommendations.

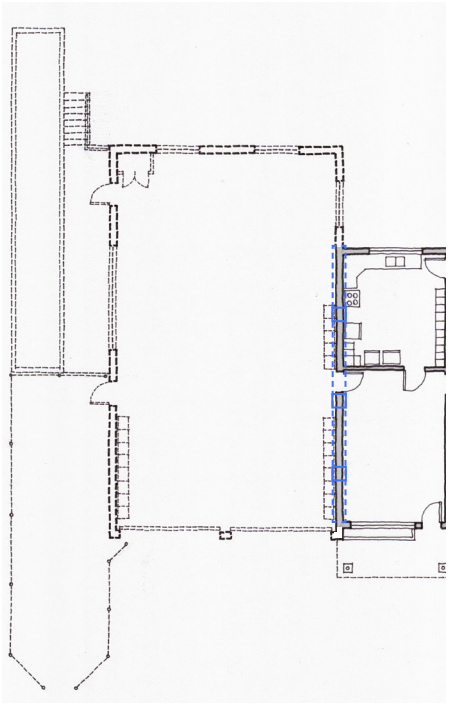

Fig. 1: Columns, piers, and beam below supporting separation wall (shown dashed) to remain.

3. Mechanical

a. Mechanical Scope

1) The scope of work includes renovations to the apparatus bay only (Fig. 2). The entire livable space is not included in the project scope. All apparatus bay mechanical systems, equipment, ductwork, piping, and appurtenances shall be demolished and replaced per current codes and best practices to accommodate the new architectural layout. New gas fired unit heaters, ventilators, and Plymovent system shall be provided. An exhaust fan shall be provided in the bunk gear room to assist in drying wet equipment.

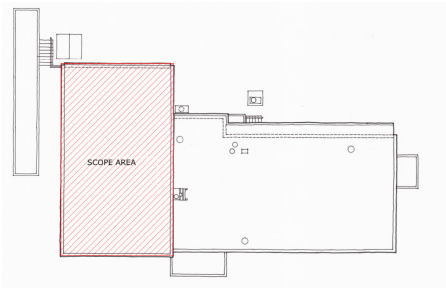

Fig. 2: AFD 3 Proposed Mechanical Scope Area

4. Electrical

a. Electrical Scope

1) Remove and replace the entire electrical distribution system within the engine bay area only.

2) Remove and replace the entire lighting system with new LED lights and lighting controls as required by the energy code within the engine bay area only.

3) Provide new infrastructure for a new dispatch system, telecommunication and Audio-visual systems.

4) Provide dedicated electrical panel to serve the engine bay area.

5. Plumbing

a. Plumbing Scope

1) The anticipated scope of work includes demolition and construction of the garage vehicle bays.

2) The new garage shall include trench drains beneath each of the vehicles. Discharge from the trench drains shall be routed through a new sand-and-oil interceptor, to be located in the driveway outside of the garage, prior to being connected to the site sanitary sewer system.

3) The central air compressor shall be removed. Compressed air in the future will be provided using portable, plug-in type equipment instead.

4) The existing water heater is inadequate for the number of showers and equipment that it serves. It is recommended that this water heater be removed and replaced with a gas-fired, tankless water heater in its place, sized for the whole facility, to be coordinated with Texas Gas Company along with the meter and service relocation.

6. Fire-Suppression Systems

a. Fire-Suppression Scope

1) There is no fire-sprinkler system located in the existing facility. If the scope of work is limited to the garage, no new fire-sprinkler system shall be required.

7. Fire-Alarm Systems

a. Fire-Alarm Scope

1) There is no central fire-alarm system in the existing facility. If the scope of work is limited to the garage, no new fire-alarm system shall be required.

A. Feasibility Test Fit Drawings of Proposed Conceptual Project - *(Provided by AFD)*

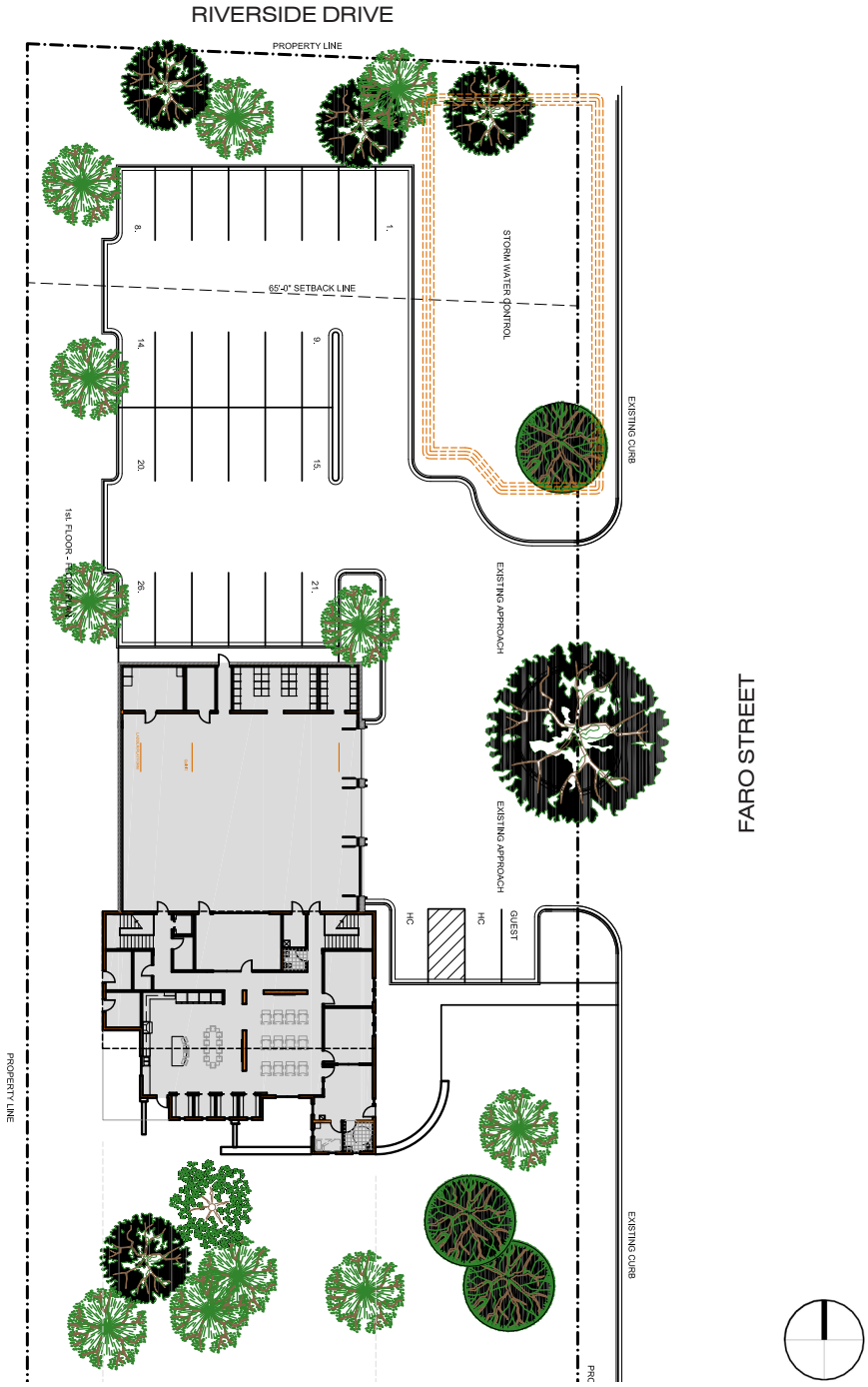

CONCEPTUAL SITE PLAN A
(AFD PROTOTYPE STATION)

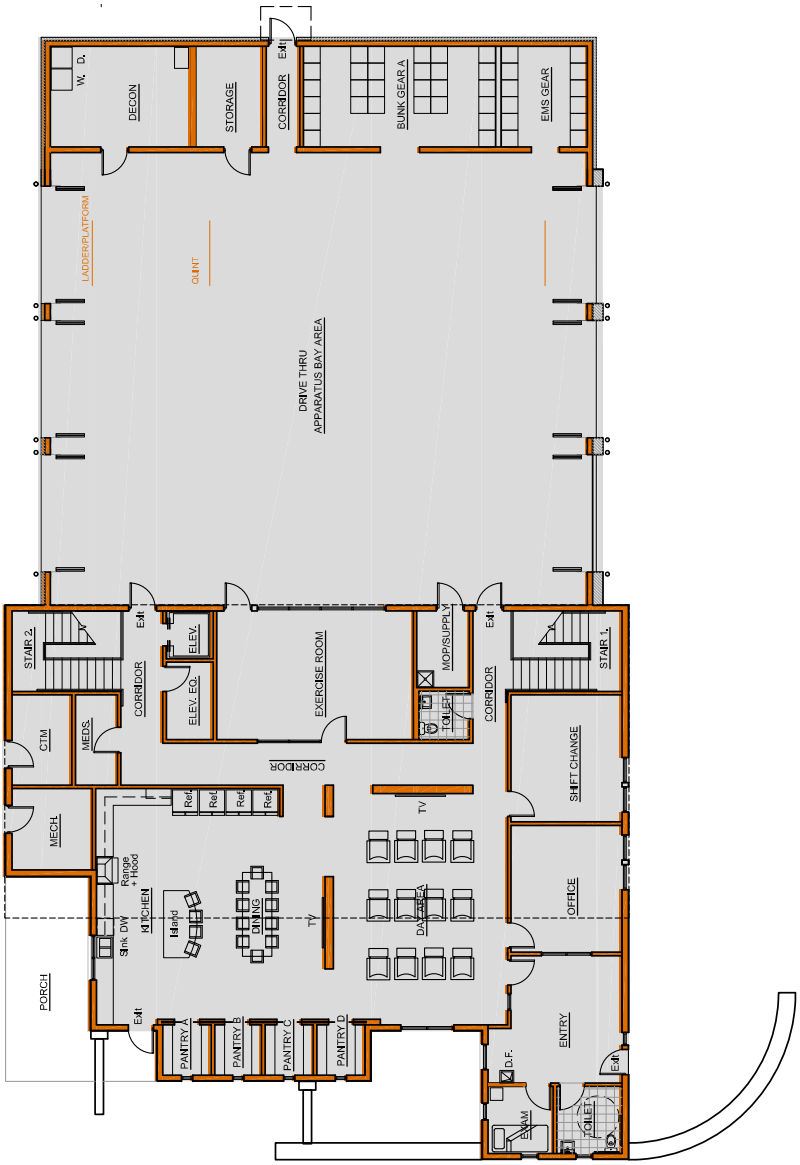

LEVEL 1 - PROPOSED FLOOR PLAN
(AFD PROTOTYPE STATION)

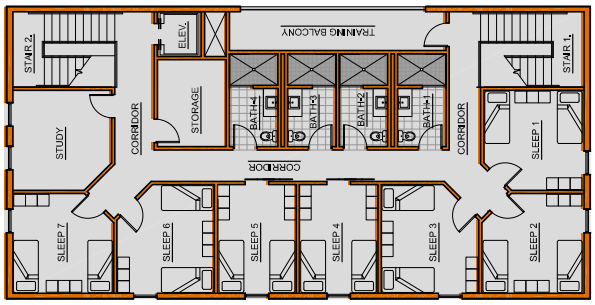

LEVEL 2 - PROPOSED FLOOR PLAN
(AFD PROTOTYPE STATION)

B. Narratives of Proposed Conceptual Project

1. Architectural

For the Architectural Feasibility Test Fit plans of the Proposed Conceptual Project, refer to the Proposed Floor Plans for Levels 1 and 2 (provided to Lawrence Group by AFD) on the preceding pages. Included with these plans is a proposed site plan – provided by AFD after discussions with the Civil Engineer for the DCM - that places the new station further away from East Riverside Drive to allow the parking lot and storm water runoff retention pond to occupy the lower elevations of the site, as well as move the entrance for the fire and EMS vehicles further away from the busy intersection of E. Riverside and Faro Drives.

Since the proposed conceptual project for this station is a new ground-up building based on the AFD Station Prototype for a 2-story, 3-bay station, there are no Lawrence Group generated keynoted plans included in Chapter 9. Instead, the D-B shall refer to Appendix E for the programming documents provided by AFD and City of Austin for written descriptions of the proposed scope.

a. Phasing of proposed renovation

1) Phase 1: Demolition, study and evaluation of moisture problem

a) Following the abatement of asbestos and lead in AFD 22 / EMS 12, the demolition of the entire complex of buildings will commence. Because of the serious issue of excessive moisture found under the existing station complex, it is the Lawrence Group's recommendation that a controlled demolition occurs in conjunction with a new forensic study to document the corroded existing foundation as it is exposed and before being removed. Analyses of the building site itself are also recommended to determine, if possible, the source of the moisture before the design of the new building begins.

2) Phase 2: Design and construction of new AFD 22 / EMS 12.

A) After the studies of the existing conditions of the foundation and the site have reached a conclusion about the best approach for mitigating the excessive moisture present on the site, the D-B will proceed with the design and documentation of the new building followed its construction.

b. Overview of proposed scope of work

1) The AFD/EMS Station prototype selected and provided to Lawrence Group for the DCM by AFD includes the following spaces:

2) On Level 1, the three-truck apparatus bay with turnout (bunk) gear rooms, a decontamination room with washer/dryer, and a storage room are oriented on the north side of the building, closest to Riverside Drive. Entry into the apparatus bay is from the east, directly off Faro Drive.

3) To the south of the apparatus bay are the more public living quarter spaces that include a large open communal kitchen with table and island dining options and four separate food pantries. The Day Area is just to the east of the open kitchen with a shift change room, an office and the public entry spaces immediately adjacent. The entry spaces include a vestibule, a toilet and an exam room.

4) Also on this lower level are spaces for an exercise room, a toilet, a medical supply room and a mop/supply room. Two interior stairs for quick exiting from the upper living quarters and an elevator and elevator machine room are shown, along with a mechanical room and a telecommunication room located with exterior access only.

5) Level 2 contains the more private living quarter areas that include seven sleeping quarters (two beds per room), four bathrooms (one for every two sleeping rooms), a study and a storage room. There is an added corridor - separated from the rest of the floor by a door – that functions as a training balcony and is open to the apparatus bay below.

c. For more detailed descriptions of recommended finishes, materials, ceilings, flooring, doors, windows, signage, etc., refer to “Architectural Standards” in Chapter 8 – Technical Criteria and Standards. Also, refer to the programming documents in Appendix E.

d. For more detailed descriptions of the proposed structural, MEP and fire suppression scope, refer to the narratives for these disciplines included in this Chapter and to Chapter 8.

2. Structural

a. Structural Scope

1) Construct new prototype fire station.

b. Summary of Proposal

1) A new geotechnical site investigation was conducted in October 2018 with recommendations for the new foundation design. The report includes the information for the estimated Potential Vertical Movement and maximum allowable bearing capacity for straight-shaft drilled piers. A copy of this report is included in Appendix K.

2) The superstructure may be framed with cold-formed or structural steel systems.

3. Mechanical

a. Mechanical Scope

1) The scope includes demolition of the entire fire station to make way for a new, ground-up, prototypical fire station. New mechanical systems and equipment, including new ductwork, piping and air devices shall be provided to accommodate the new station layout and shall be installed per current codes and best practices. Living quarters shall be zoned independently to provide individual temperature control. Single zone systems are acceptable for the kitchen and dining area, the day room, and locker rooms, however individual units must be provided for each zone (i.e. kitchen and dining, day room, lockers).

2) Kitchen exhaust shall be provided. General exhaust for locker rooms and restrooms shall be provided. A new Plymovent system shall be provided in the apparatus bay, with exhaust hose drops at each vehicle. Ventilation shall be provided by drawing outside air in through outside air louvers with an exhaust fan and exhausting through an exhaust air louver in the apparatus bay. Exhaust shall also be provided in the bunk gear room to assist in drying wet equipment. Gas fired unit heaters shall be provided in the apparatus bay to provide heat.

4. Electrical

a. Electrical Scope

1) The scope of work includes complete demolition of the existing building, with a new ground-up station to be constructed in its place. New electrical service, equipment, devices, communications system and lighting shall be provided throughout. Refer to Chapter 8 for electrical systems descriptions and criteria for new buildings.

5. Plumbing

a. Plumbing Scope

1) The scope of work includes complete demolition of the existing building, with a new ground-up station to be constructed in its place. New plumbing fixtures, equipment, and piping shall be provided throughout. Refer to Chapter 8 for plumbing systems descriptions and criteria for new buildings.

2) Natural gas is available on site, and should therefore be used for future water and space heating. Coordinate design and installation with Texas Gas Company as required.

3) Domestic water is provided through an NPS 2 site water main from East Riverside Drive. If a new fixture unit analysis shows that this line is inadequate to support the new design, replace the domestic water main with a new, larger one as required.

4) Waste from kitchen fixtures and equipment shall be rerouted through a new, dedicated grease trap, and waste from new trench drains in the vehicle bays shall be routed through a new, dedicated sand-and-oil interceptor. The grease trap shall be sized in accordance with the City of Austin Grease-Trap Sizing Criteria, based on the fixtures and equipment included with the new design.

6. Fire-Suppression Systems

a. Fire-Suppression Scope

1) A fire-sprinkler system utilizing a new main off the city water supply shall be provided, with coverage extended throughout.

7. Fire-Alarm Systems

a. Fire-Alarm Scope

1) An automatic fire-alarm system with central control panel shall be provided. Audible notification shall be provided throughout, and visual notification shall be provided throughout all areas required by ADA and Texas Accessibility Standards.

8 | Technical Criteria and Standards for Conceptual Projects

Applies to all Stations

A. General Guidelines & Design Standards

1. Codes

a. Design solutions proposed for City of Austin Fire Station's 1, 3, and 22 shall comply with all applicable laws, building codes, ordinances, and statutes currently adopted and amended by the City of Austin, including:

1) 2015 International Existing Building Code
2) 2015 International Building Code
3) 2017 National Electrical Code
4) 2015 Uniform Mechanical Code
5) 2015 Uniform Plumbing Code
6) 2015 International Fire Code
7) 2015 International Energy Conservation Code

2. Accessibility

a. All aspects of the design shall comply with the 2012 Texas Accessibility Standards (TAS) and the 2010 Americans with Disabilities Act (ADA).

3. Quality

a. In addition to compliance with these minimum requirements, design strategies implemented by the D-B shall prioritize sound and lasting construction to minimize future maintenance and energy consumption. Quality and durable materials shall be utilized.

B. Architectural Standards

Unless otherwise noted or clarified, the technical criteria and standards listed below are those as provided by the City of Austin.

1. Exterior Finishes and Materials

a. New Construction

1) Exterior finishes and materials shall be low maintenance and durable. Standing seam metal roofs are preferred and shall have a minimum slope of one inch per foot. Asphalt shingle roofs and "green" vegetated roofs are NOT allowed. Roof-mounted equipment and penetrations shall be kept to a minimum and screened from public view; screening shall allow for proper maintenance of equipment. Exterior finishes shall have neutral colors; bright, primary colors are not allowed.

b. Existing Construction

1) Exterior finishes and materials at station additions shall match existing finishes. Where masonry is removed to accommodate new construction or modifications, masonry shall be salvaged for reuse. If materials do not match, the new material shall be as close as possible to existing adjacent finish, size, shape, texture, and color. Additional information to be confirmed with owner.

2. Interior Finishes and Materials

a. New Construction

1) All interior finishes and materials shall be durable, easy to maintain and easy to clean. Interior finishes shall contain low or no VOC's, and finish selections shall be made with LEED credits in mind. Plastic laminate shall not be used for any surface. Countertop surfaces shall have minimal seams so that cleaning and decontamination are easy; the Owner prefers stainless steel or solid surface for all countertops. Where tile is used on walls or floors, larger format tile shall be specified to minimize grout joints.

2) All materials in the apparatus bays, decontamination room, bunk gear and supply shall be moisture-resistant, so they can be hosed down for cleaning. In these areas, sealed masonry is preferred for wall construction.

b. Existing Construction

1) All interior finishes and materials shall be durable, easy to maintain and easy to clean. Interior finishes shall contain low or no VOC's, and finish selections shall be made with LEED credits in mind. Plastic laminate shall not be used for any new surface. Countertop surfaces shall not have any seams so that cleaning and decontamination are easy; the Owner prefers stainless steel or polished concrete for countertops. Linoleum shall not be used for flooring; the Owner prefers tile, polished concrete or terrazzo for flooring. Where tile is used on walls or floors, larger format tile shall be specified to minimize grout joints.

3. Ceilings

a. New Construction

1) Lay-in ceilings shall be provided throughout the station except as indicated below and shall have white acoustical panels and a 2' x 2' grid system.

2) Bathing rooms and the kitchen shall have a

5/8" moisture-resistant gypsum board ceiling, textured and painted.

3) Apparatus bays shall have a 20' minimum clear height; lay-in ceilings and gypsum board ceilings are not allowed in apparatus bays. Any exposed structural members or exposed metal deck shall be painted.

b. Existing Construction

1) New lay-in ceilings shall be provided throughout all stations and shall include a white acoustical panel with 2'x2' grid system.

2) Bathing room ceilings shall have moisture-resistant 5/8" gypsum board with texture and paint.

4. Doors and Windows

a. New Construction

1) The front entry door shall be aluminum and glass or hollow metal with a lite. All other exterior doors and frames shall be painted hollow metal without glazing. Overhangs shall be provided at all exterior doors.

2) Windows shall be aluminum and energy-code-compliant. Operable units, where used, shall be double-hung type. Casement type windows are also allowed for operable units. All operable windows must comply with egress requirements in the IBC and shall include locks and insect screens.

3) Interior doors shall be solid-core wood with painted hollow metal frames. Doors with view panels or storefront type doors shall be provided at the entry, office, exercise room, study, apparatus bays, day room and kitchen. Bathing room doors shall have hardware with occupancy indicators. The Owner may consider sliding or barn-typedoors for sleeping rooms to allow for more maneuvering space inside the room.

b. Existing Construction

1) Where exterior doors and frames are indicated to be replaced, new exterior doors and frames shall be painted hollow metal to match existing. All windows shall be replaced with energy code compliant windows. Window finish shall be as approved by the Owner.

2) New interior wood doors shall be provided where indicated; finish shall be as approved by the Owner. Door hardware shall be as approved by

the Owner. New interior doors at turn out gear additions shall allow ventilation.

5. Signage and Graphics

a. New Construction

1) Provide interior panel signage at pantry doors, sleeping room doors, bathing room doors and other locations required by the building code. Signage shall be of a durable material and shall meet all TAS and ADA requirements. Font and finish colors shall be as approved by the Owner.

b. Existing Construction

1) Provide interior panel signage as required by TAS, ADA and building code. Signage shall be of a durable material and shall meet all 2012 TAS and 2010 ADA requirements. Font and finish colors shall be as approved by the Owner.

6. Apparatus Bay Doors

a. New Construction

1) Apparatus bays shall have electrically operated hydraulic bi-fold doors. Bay doors shall be industrial grade and fast action, with adequate view panels to allow apparatus drivers to see the driveway. Overhangs shall be provided at bay doors.

b. Existing Construction

1) The D-B shall include in their proposal a design and installation of new hydraulic bi-fold doors to replace all existing overhead doors at the apparatus bays with. The bi-fold doors shall be sized to fit in the existing opening at each station. This scope was not included in the feasibility study and therefore, the cost for these doors are not accounted for in the estimate.

7. Art in Public Places (AIPP) - City of Austin Requirement

a. New Construction

1) City of Austin Art in Public Places (AIPP) requirements shall not be included in the D-B's proposal. However, the D-B shall make reasonable efforts to coordinate with the City AIPP program implementation and make reasonable accommodations for the installation of the art.

b. Existing Construction

1) City of Austin Art in Public Places (AIPP) requirements will be managed and implemented by the Owner; this scope shall not be included in

the D-B's proposal. However, the D-B shall make reasonable efforts to coordinate with the City AIPP program implementation and make reasonable accommodations for the installation of the art.

8. Equipment

a. New Construction

1) Selection and finish of equipment and appliances shall be coordinated with the Owner during the design phase. If natural gas is available, an exterior gas connection shall be provided for outdoor grilling, and gas shall be used for HVAC units, water heaters, apparatus bay heaters, clothes dryers, ranges, and emergency generator.

b. Existing Construction

1) Washer and dryer connections for large stackable units shall be provided at each station; the washer and dryer shall be located near the apparatus bay, and away from the kitchen, for convenient decontamination. Kitchen appliances shall be provided by the Owner at each station, including refrigerators, ranges, dishwashers, in-sink disposals and ice-makers. Appliances shall be coordinated with the Owner during the design phase. If natural gas is available, an exterior gas connection shall be provided for outdoor grilling, and gas shall be used for dryers and ranges.

9. Furnishings

a. New Construction

1) Size, finish and specifications for all furnishings shall be coordinated with the Owner during the design phase.

b. Existing Construction

1) Lockers shall be provided at each sleeping room as indicated in the Feasibility Study. Locker size and finish shall be coordinated with the Owner during the design phase. Contract-grade, manually operated blackout window shades shall also be provided at all sleeping rooms. Blackout window shades shall be included in the design scope for all sleeping rooms to minimize the disruption from the exterior ambient light.

10. Acoustics

a. New Construction

1) Station designs shall incorporate measures to reduce sound transmission throughout. These measures shall include but are not limited to

acoustic insulation in wall cavities and acoustic seals on sleeping room doors. The D-B shall consider all aspects of the design as they relate to sound transmission, including HVAC ducting, sound absorption of finish materials, space adjacencies, etc., and shall implement reasonable measures to reduce sound transmission between interior spaces and from the exterior of the building. Station designs shall have an STC rating greater than 55 between sleeping rooms and adjacent rooms, and an NIC rating greater than 55 between sleeping rooms and adjacent spaces below at 2-story stations.

b. Existing Construction

1) Renovation designs shall incorporate measures to reduce sound transmission throughout. These measures shall include but are not limited to acoustic insulation in wall cavities and sound seals on sleeping room doors. The D-B shall consider all aspects of the design as they relate to sound transmission, including HVAC ducting, sound absorption of finish materials, space adjacencies, etc., and shall implement reasonable measures to reduce sound transmission between interior spaces and from the exterior of the building. STC > 55 between sleeping rooms and adjacent room. NIC > 55 between sleeping rooms and adjacent space below.

11. Termite Control

a. Provide termite treatment utilizing an EPA-Registered termiticides suitable for the specific conditions being treated. Coordinate termiticide selections with LEED requirements and Owner environmental policies.

b. New Construction

1) Treat soil under slabs-on-grade, under foundations, in crawlspaces, and voids in masonry foundations. Also treat soil adjacent to slabs-on-grade and foundations.

2) Treat wood framing and sheathing.

3) Any vents or openings, including crawl space vents and attic vents, must be screened to prevent access of winged termites.

4) Termite treatment certifications or electronic copies shall be furnished to Owner after treatment has occurred for record keeping.

c. Existing Construction

1) Treat penetrations in slabs-on-grade, crawl spaces, voids and soil adjacent to foundations.

2) Treat wood framing and sheathing.

12. Elevators

a. New Construction

1) Two-story station designs will require a passenger elevator. Manufacturer and type of elevator shall be selected by the D-B in consultation with an experienced elevator technical representative. The elevator cab shall be accessible, and cab flooring and wall finishes shall be durable and complement adjacent common space finishes. Elevators shall meet all TAS, ADA, local and state codes and regulations. D-B shall coordinate with Owner during the design phase to incorporate training opportunities for station personnel into the placement and design of the elevator, elevator landings elevator feature specifications.

13. Flooring

a. New Construction

1) The Owner prefers tile, polished concrete or terrazzo for flooring. Carpet is not allowed in the exercise room. Thick-set tile shall be provided at all shower floors. Floors in apparatus bays shall be sealed concrete with a smooth trowel finish and a slip-resistant coating applied in strips below apparatus locations.

Lawrence Group adds the following Architectural Standards:

14. Definitions

a. "Durable" finishes and materials, as noted in "1. Exterior Finishes and Materials" / "a. New Construction", refers to products such as brick masonry, integral color split face or burnished CMU, concrete panels, metal panels, etc. Stucco will not be allowed except as approved by the Owner.

C. Structural Standards

1. Structural Design Criteria

a. The structures shall be designed in accordance with the latest adopted International Building Code with City of Austin Amendments.

2. Loads

a. The minimum design loads shall be as follows:

1) Dead Loads: Actual weights of materials of construction and fixed service equipment shall be used or values subject to the approval of the building official.

2) Live Loads (Uniform and Concentrated): The maximum loads expected by the intended use or occupancy and no less than the minimum loads given in section 1607 of the IBC. Heavy vehicle loading considerations as indicated by the Code shall be considered.

3) Snow Loads: As calculated in accordance with Chapter 7 of ASCE 7

4) Wind Loads: As calculated in accordance with Chapters 26 to 30 of ASCE 7

5) Soil Lateral Loads: As provided in a site-specific geotechnical analysis and report.

6) Rain Loads: As calculated per the IBC

7) Flood Loads: As calculated in accordance with ASCE 24

8) Earthquake Loads: As calculated in accordance with ASCE 7

3. Risk Category of Buildings

a. Minimum Risk Category IV

4. Deflection Criteria

a. Live Load Deflection: Less than or equal to L / 360

b. Total Deflection: Less than or equal to L / 240

c. Lateral Drift Deflection: Less than or equal to H / 400

d. Members supporting brick: Less than or equal to L / 600 and 3/8”

5. Structural Tests and Special Inspection

a. Structural Tests and Inspections shall be in accordance with Chapter 17 of the IBC.

6. Structural Framing

a. Roof framing may be achieved with steel decking supported by structural steel or cold-formed steel framing systems. Roof framing may match existing material of joist and decking. New framing may utilize structural steel or cold-formed steel members.

b. Floors may be constructed with concrete on steel decking supported by structural steel or cold-formed steel members.

c. Walls may be framed with structural steel, cold-formed steel framing or concrete masonry units. Lateral bracing may be achieved with braced frame systems comprised of diagonal bracing, moment frames, or with structurally sheathed shear walls or shear walls comprised of cast-in-place concrete or concrete masonry units.

7. Structural Foundations

a. Foundations shall be designed in accordance with a site-specific subsurface analysis and report provided by a State of Texas Licensed Geotechnical Engineer. Where site soil conditions allow, foundations shall be designed as a stiffened slab-on-grade system. Sub-grade preparation of sites underlain with expansive soils shall result in a potential vertical rise (PVR) of ¾" or less. Sites that are underlain with highly expansive soils may also be designed as structurally suspended foundations with structural loads supported by spread footings, drilled piers, or augered-cast piles. Foundations for flag poles and other utility poles shall be designed as independent from primary building structures and to resist the superimposed loads applied.

D. Mechanical Standards

Unless otherwise noted or clarified, the technical criteria and standards listed below are those as provided by the City of Austin.

1. HVAC Design Criteria

a. Cooling and heating load calculations will be performed with industry specific software using ASHRAE methodologies. Specific design criteria shall be as follows.

1) Summer Dry Bulb Temperature – 99.4°F.
   - 0.4% design conditions per ASHRAE Fundamentals.

2) Summer Wet Bulb Temperature – 74.4°F.
   - 0.4% design conditions per ASHRAE Fundamentals.

3) Winter Dry Bulb Temperature – 26°F
   - 99.6% design conditions per ASHRAE Fundamentals.

b. Calculations shall include specific envelope assemblies for each station design, along with internal loads such as equipment, lights, and projected occupancy numbers. Ventilation and infiltration shall also be included in the calculations per ASHRAE 62.1-2013 standards.

c. Sufficient ventilation air shall be provided to comply with the requirements of ASHRAE 62.1-2013 and the UMC 2015 with City of Austin amendments. Design shall maintain net positive building pressurization.

d. The following codes shall be applicable to this project:

1) Building Code – International Building Code 2015 with City of Austin amendments.

2) Mechanical Code – Uniform Mechanical Code 2015 with City of Austin amendments.

3) Energy Code – International Energy Conservation Code 2015 with City of Austin amendments.

4) Energy Standards – ASHRAE 90.1-2013

5) Ventilation – ASHRAE 62.1-2013

6) Thermal Comfort – ASHRAE 55-2004

2. HVAC Systems

a. Variable-refrigerant heat-recovery (VRF) type systems shall be provided to satisfy cooling and heating demand. System capacity shall be based on design day temperatures, interior load assumptions and ventilation requirements as indicated above. System shall be capable of simultaneous heating and cooling.

1) High-static ducted indoor units or vertical / horizontal convertible units shall be utilized as indoor units.

2) Condensing unit shall be located on the ground adjacent to the building. Condensing unit shall be air cooled and shall have a variable speed compressor. Unit shall provide continuous heating during defrost.

3) MERV 13 filtration shall be provided.

4) Units shall utilize R-410A refrigerant.

5) Each sleeping room shall be separately zoned with individual thermostat.

6) Medical closet in apparatus bay shall be air conditioned.

7) GAATN / Com Room shall be provided with its own dedicated unit.

8) Provide condensate collection system.

9) Apparatus bay shall be heated only. Provided convection type heater with remote wired thermostat.

b. Indoor design conditions shall be:

1) Kitchen/Dining/Day Area/Pantry:

a) 65°F/±50%RH (Summer) | 75°F (Winter)

2) Offices:
   a) 65°F/±50%RH (Summer) | 75°F (Winter)
3) Sleeping Rooms:
   a) 60°F/±50%RH (Summer) | 75°F (Winter)
4) Study/Shift Change:
   a) 65°F/±50%RH (Summer) | 75°F (Winter)
5) Gear Locker Rooms:
   a) 70°F/±50%RH (Summer) | 75°F (Winter)
6) Exercise Room:
   a) 65°F/±50%RH (Summer) | 75°F (Winter)
7) GAATN / Com Room:
   a) 68°F/±50%RH (Summer) | 75°F (Winter)
8) Medical Closet:
   a) 65°F/±50%RH (Summer) | 75°F (Winter)

Jose I. Guerra, Inc. adds the following Mechanical Standards:

c. Heating and cooling packaged, outdoor, rooftop air conditioning units capable of supplying 50% of the total supply air volumes as outdoor air in cooling and heating operation are acceptable for common areas. Units shall be factory assembled and tested; be designed for exterior installation and consist of compressor(s), refrigerant coils, supply/return/exhaust fans and condenser fans, refrigeration controls, gas heating, economizer controls, temperature controls, humidity controls, filters, and dampers. Units shall be of galvanized-steel, double wall construction with enamel paint finish, removable panels or access doors with neoprene gaskets for inspection and access to internal parts, knockouts for electrical and piping connections, exterior condensate drain connection and lifting lugs. The supply fan shall be a direct drive fan mounted to the motor shaft. Fan motor shall be variable speed controlled either by VFD or a totally enclosed ECM motor that is speed controlled by the rooftop unit controller. The motor shall include thermal overload protection and protect the motor in the case of excessive motor temperatures. Motors shall be premium efficiency.

d. The unit controller shall proportionally control the VFD or ECM motors on the supply fan based on space temperature. The unit controller shall increase/decrease the speed of the supply fan in order to maintain the space temperature within its setpoint and dead-band. The unit controller shall provide discharge air temperature control with the

compressor modulation. Unit shall have return and outside air dampers with neoprene seals, outside-air filter, and hood. Damper motors shall be individual, fully analog, modulating spring return with adjustable minimum position for outside air damper control independent of return air. Electronic control system uses mixed-air temperature and selects between outside air and return air enthalpy to adjust mixing dampers.

e. Unit shall have single point power connection.

3. Exhaust Systems

a. Kitchen range shall be provided with a dedicated exhaust hood and fan. Exhaust hood and fan shall be commercial type with fire suppression system. Mop/supply room, toilets, and showers shall be provided with mechanical exhaust according to code. Gear lockers shall be provided with exhaust system and moisture control system (de-humidifier). Engine exhaust system (Plymovent or equal) shall be provided. Provide wall dryer exhaust vent at clothes dryer location if possible, otherwise a roof vent shall be provided.

Jose I. Guerra, Inc. adds the following comments:

b. Toilet Room Exhaust Ventilation:

1) 70 CFM per Water Closet and 50 CFM per Urinal, or 1.5 CFM per SF, whichever is greater.

4. Energy Recovery Ventilator System

a. The International Energy Conservation Code requires the use of an energy recovery ventilator (ERV) if enough consolidated exhaust and outside air are available and the equipment operation is within the required hours. If ERV is required, provide a plate and frame type enthalpy core unit.

5. Piping Systems

a. Condensate piping shall be type “L” copper tubing inside the building. Below grade piping shall be Schedule 40 PVC. Refrigerant piping shall be type “ACR” copper. Insulation for all piping systems shall be closed cell type. Insulation thickness shall meet the requirements of the current version of the IECC. Provide isolation valves on both inlet and outlet of branch selector box.

6. Air Distribution Systems

a. The air distribution shall consist of overhead supply ductwork with ceiling and sidewall diffusers. Ceiling return grilles shall be utilized. Ventilation air shall be

directly supplied to the return plenum of the indoor VRF units and mix with the return air during unit operation. Concealed ductwork shall be externally wrapped with insulation. Exposed ductwork shall be double wall pre-insulated spiral ductwork. This selection shall be coordinated with the Owner to address all aesthetic concerns. Insulation R values shall meet or exceed the requirements of the current version of the IECC.

b. All air devices shall be selected with an NC rating of 25 or less in all areas.

7. Pressurization

a. The following pressurization relationships shall be maintained throughout the project:

1) Air Lock – Positive to Apparatus Bay

2) Living Quarters/Dining/Kitchen/Offices – Positive to Air Lock

8. Controls

a. The VRF system shall be provided with complete stand-alone controls. A central web accessible touch screen controller shall be provided. Zone thermostats shall control the indoor units in each zone and shall communicate back to the central controller. Exhaust fan status shall be provided on the touchscreen controller.

b. The central controller shall at a minimum have scheduling, set point adjustment and alarm monitoring capability.

Jose I. Guerra, Inc. adds the following Mechanical Standards:

9. Building Systems Startup and Verification

a. Testing and Balancing

1) HVAC air and water systems will be tested, adjusted, and balanced by an approved independent AABC or NEBB certified agency.

b. Equipment Startup and Testing

1) The Mechanical Contractor will accomplish equipment startup and testing. Each piece of equipment will be started and checked out according to manufacturer's recommendation to assure proper operation before occupancy.

c. Owner Training

1) The Mechanical Contractor will demonstrate the operation and maintenance procedures of each mechanical system or equipment item for the Owner's representative before occupancy.

d. Automatic Control System Testing

1) The Automatic Control System will be started and checked out by the System Installer and by the Mechanical Design Engineer to assure proper operation and conformance with requirements before occupancy.

E. Electrical Standards

Unless otherwise noted or clarified, the technical criteria and standards listed below are those as provided by the City of Austin.

1. Electrical Service

a. Perform a full building demand calculation to determine the service size in accordance with the currently adopted National Electrical Code (NEC). The service design shall be per the Austin Energy Design Criteria, the currently adopted NEC and City of Austin amendments. The D-B is responsible for all coordination with Austin Energy for service details.

2. Electrical Distribution

a. The electrical service shall be 120/208V, 3Phase, 4Wire.

b. Main service disconnect shall be suitable for use as service entrance equipment and shall be on the building exterior along with the Austin Energy meter. Service disconnect shall be heavy duty.

c. Provide ground-fault protection as required by NEC and City of Austin amendments.

d. Electrical panelboard shall be located inside the building. Panelboard shall be separate for normal and emergency power. Panelboard shall have copper bus with bolt-on circuit breakers and door in door covers. Provide integral Sure Protection Device (SPD). Panelboard shall be fully rated. Panelboards shall be sized for 20% spare capacity. All breakers shall be rated for AIC ratings required to handle the available fault current as determined by a short circuit study.

3. Raceway and Feeder

a. Service entrances feeder cable shall be THHN/THWN-2, copper, single conductors in raceway.

b. Distribution feeder cable shall be Type THHN/THWN, copper in electric metallic tubing (EMT) conduit with steel compression fittings. Rigid galvanized steel (RGS) conduit shall be installed where exposed to weather or wet/damp location.

c. Branch circuits cable concealed in ceilings, walls, and partitions shall be Type THHN/THWN, copper in EMT. MC cable shall be used only for fixture whip. All branch circuit wiring will contain green grounding conductors.

d. PVC conduit shall be used in underground application.

4. Grounding

a. The service entrance neutral conductors shall be grounded to earth and bonded together with a grounding system consisting of buried conductors, driven ground rods and connections to building foundation steel.

b. Grounding risers within the building shall be provided to connect wall mounted ground bars in the electrical and communications rooms to the service grounding system. Ground bar shall be used as the central grounding point for telecommunications and other systems in the bonding.

5. Lighting

a. Lighting systems shall be designed and specified to meet the illumination levels as recommended by the IESNA foot-candle recommendation for each specific area. Design calculations, including exterior, shall be performed using lighting design software. Calculations and foot-candle plots required to demonstrate exterior light trespass compliance are to be included.

	Generator Backup Light (Quantity)	Color Temperature Requirement	Special Lighting Note
Kitchen	1	2700 Max	See Below
Dining	1	2700 Max	See Below
Dayroom/EMS Dayroom	1	2700 Max	See Below
Sleeping Quarters	2	2700 Max	See Below
Offices/Study	1	2700 Max	See Below
Exercise	None	2700 Max	See Below
Shower/Restroom	2	2700 Max	See Below
Apparatus Bay/Gear Rooms	All	3200 Max	No UV Lights near Gear
GAATN/Comm Closet	All	2700 Max	See Below

b. Special Lighting Note: Alerting Tone System includes special lights and speakers. Coordinate with the Owner during design process for wiring, coordination, integration and special installation requirements.

c. Lighting shall be LED type throughout. Fixtures shall have 2700 Degree K color temperature and a CRI of 80 or greater.

d. Exit signs and pathway egress luminaires shall have battery back-up source and be hard-wired. Exterior lighting shall be controlled by a combination photo cell and time clock.

e. Interior public spaces lighting shall be controlled by building lighting controls system which includes timeclock, day-light sensor, occupancy sensors or wall override switch. Occupancy sensor control of spaces shall be included to meet the requirements of ASHRAE 90.1. Sensors shall be set for manual on only and automatic off.

f. Exterior perimeter zone light fixtures shall be controlled by day-light sensors. Daylighting controls consisting of photocell-controlled automatic dimming of fixtures shall be provided in rooms and zones where daylight is present. Controls shall be self-adjusting based on maximum artificial lighting levels.

g. Both daylighting controls and occupancy sensors shall be integrated into a distributed intelligence lighting control system (where every device is addressable). Devices shall also be intelligent and capable of standalone operation for system reliability and flexibility. Relays shall be in sensors and power packs. Remote relay panels shall not be used.

h. Both interior and exterior lighting densities calculations shall be performed and documented for compliance with ASHRAE 90.1 lighting power requirements and the 2015 International Energy Conservation Code. Exterior lighting shall be dark sky compliant with proper light fixture shielding.

i. All exterior light fixtures shall comply with the City of Austin Subchapter E dark sky requirements.

6. Alerting System

a. The D-B shall provide advanced alerting by Locution Systems for AFD and 8 Alert System for EMS at each station. The alerting system shall be zoned and include separate devices for audio and visual alerting. The D B shall coordinate with the Owner during the design phase to determine all required components, inter departmental and inter-agency integration with other building systems.

7. Power

a. Provide normal and emergency power outlets/ receptacle as indicated below.

	Outlet Normal Power (Quantity)	Outlets Generator-Backup In.	Special Outlet (Type / Quantity / etc.)	Special Power Note
Kitchen	Per Code and Layout	4		See Below
Dining	Per Code and Layout			
Dayroom/EMS Dayroom	Per Code and Layout			
Sleeping Quarters	Per Code and Layout			
Offices/Study	Per Code and Layout	1		
Exercise	Per Code and Layout			
Shower/Restroom	Per Code and Layout			
Apparatus Bay/Gear Rooms/Decon Room	Per Code and Layout	Bi-Fold doors	One outlet	
GAATN/Comm	See Below	All Receptacle		

b. Special Power Note: All receptacles in the kitchen shall be provided with a capability to de-energize by the alerting tone system. Provide a single manual reset button to re-energize receptacles.

8. Wiring Devices

a. Receptacles and line voltage switches shall be industrial specification grade. GFCI receptacles shall be used where required by the NEC.

b. Low voltage and dimming switches shall be compatible with the LED drivers and occupancy sensors/power packs that they control.

c. Provide overhead electrical reel cord with one (1) 20Amp, 120V receptacle per fire truck.

d. Provide electrical reel cord with one (1) 20Amp, 120V receptacle and one (1) 30Amp, 208V, 1Ph receptacle per EMS vehicle.

9. Emergency Power

a. Each station shall be provided with a natural gas-powered emergency generator and automatic transfer switch. Jose I. Guerra inc. recommends that the emergency power system shall be sized to carry the entire facility due to the nature of this facility.

10. Lightning Protection

a. Provide lightning protection system. The system shall comply with all requirements of NFPA-780 and UL-96A. The lightning protection system shall consist of air terminals, roof perimeter conductors, down conductors, ground rods and connectors and fittings required for a complete system. The system shall be installed by a bonded lightning protection company

11. Charging Station

a. Provide one dual port electrical vehicle charging station at each new station; this shall be in one of the parking lot areas.

12. PV Solar Panel Ready

a. Provide electrical infrastructure to integrate future photovoltaic solar panels. Electrical gear and design shall be compatible with Austin Energy PV Solar Panel guidelines.

13. Short Circuit and Coordination/ Arc Flash Study

a. A short circuit and coordination study shall be provided to determine the calculated short circuit ratings for equipment based on the system as installed. The coordination study shall be used to properly set field adjustable overcurrent protective devices.

b. An arc flash study shall be provided to determine the calculated incident energy that may result during a system fault. The arc flash study shall be used by the Owner to determine the minimum level of proper personal and protective equipment (PPE).

F. Plumbing Standards

Unless otherwise noted or clarified, the technical criteria and standards listed below are those as provided by the City of Austin.

1. Water Service Connection

a. Provide service connection to the City of Austin potable water utility main for potable water and fire protection water uses within the building.

Jose I. Guerra, Inc. adds the following comments:

b. Domestic cold and hot water systems shall be piped to all new plumbing fixtures and shall include point-of-use backflow protection.

c. In renovated buildings, if a new fixture unit analysis shows that the existing utilities are undersized, replace the domestic water main as required.

2. Domestic Water Service

a. Provide a reduced pressure zone backflow preventer assembly located immediately downstream of the water meter. Provide a heated enclosure to protect the BFP assembly from freezing and physical damage. Adhere to all plumbing code requirements and local ordinances regarding identification and color coding of potable water systems.

Jose I. Guerra, Inc. adds the following comments:

b. An RPZ type backflow preventer is not required at the meter unless some sort of auxiliary water is used on the site. To my knowledge, the fire stations will not be utilizing auxiliary water. We therefore recommend the backflow preventer to be installed at the indoor point of entry.

3. Sanitary Sewer

a. A complete sanitary system shall be provided to meet the building requirement. Provide grease trap for kitchen grease waste. Provide trench drain beneath each apparatus location spanning the length of the apparatus bay; route trench drains to sand separator.

Jose I. Guerra, Inc. adds the following comments:

b. Sanitary waste and vent systems shall be piped to all new plumbing fixtures. New floor drains in restroom areas and mechanical rooms shall be served by trap primers.

c. A grease trap shall be provided, at an outdoor location on site that is as near as is practical to the kitchen. Sanitary grease waste from kitchen sinks, floor drains, floor sinks, and mop sinks serving the area shall be routed through the grease trap, prior to connecting to the site sanitary waste system. The grease trap shall be sized in accordance with the City of Austin Grease-Trap Sizing Criteria.

d. Sand and oil interceptors shall be provided at an outdoor location on site that is as near as is practical to the garage. Piping from floor drains or trench drains that will receive drainage from parked vehicles shall be routed through the sand and oil interceptor, prior to connecting to the site sanitary waste system.

4. Domestic Cold/Hot Water Distribution

a. A complete domestic cold and hot water system shall be provided to meet the building requirements. Pressure reducing valve may be required if the water pressure exceeds 65 PSI at the point of use.

1) Domestic water piping shall be Copper Type K.

2) Sanitary waste and vent piping shall be schedule 40 PVC.

b. Provide insulation on all domestic cold and hot water piping. Insulation thickness shall comply with the requirements of the IECC 2015.

c. Adhere to all plumbing code requirements and local ordinances regarding identification and color coding of potable water systems.

d. Provide water hammer arrestors at all self-closing valves.

e. Provide exterior freeze-protected hose bibbs. One on the front of each apparatus bay, one in the rear of each apparatus bay and one at the porch area.

Jose I. Guerra, Inc. adds the following comments:

f. Non-freeze wall hydrants shall be provided at approximately 100-ft intervals along the exterior of the building. Hose bibbs shall be proved at indoor mechanical rooms. Where roof-mounted HVAC equipment is provided, non-freeze roof hydrants shall be provided within 50 feet of equipment for cleaning coils.

g. Domestic water piping shall be provided with shutoff valves for isolation of piping sections for maintenance and repair. Valves Nominal Pipe Size (NPS) 2 and smaller shall be two-piece, full-port ball valves. Valves NPS 2-1/2 and larger shall be butterfly valves.

h. For domestic water piping, type “L” copper water tube is recommended for above-ground, interior applications. As an option, copper pressure-seal-joint fittings and pressure-sealed joints may be used as well.

5. Water Heater

a. Provide tankless type gas water heater. Domestic hot water shall be controlled to maintain 110°F supply temperature to lavatories, sinks, mop basins, and showers. Provide thermostatic mixing valve. Water heater shall exceed the energy efficiency requirement of ASHRAE 90.1-2013.

Jose I. Guerra, Inc. adds the following comments:

b. The water supply to tankless, gas-fired water heaters shall be provided with an anti-scale, in-line cartridge system in order to prevent scale buildup at the heating element.

c. Where getting gas is impractical, electric storage-type heaters shall be provided.

d. In storage type water heaters, water shall be stored at 140°F. An ASSE 1017 type thermostatic mixing valve shall be provided on the hot water outlet to the building.

e. A hot water circulation system shall provide hot water throughout the building wherever the water heaters are located more than 20-feet from the fixtures they serve. Circulation pumps shall be provided with aquastats in compliance with energy efficiency standards.

6. Natural Gas

a. Provide new natural gas service for HVAC units, apparatus bay heaters, ranges, emergency generator, gas clothes dryer and tankless type water heater, review with Owner for final requirements. Coordinate with the local utility for natural gas service, metering, pressure regulation, etc. If gas service is available provide gas service for outdoor grill at porch area.

Jose I. Guerra, Inc. adds the following comments:

b. Natural gas piping shall be distributed within the building at a pressure no greater than 5 psig, with secondary pressure-regulators at the equipment as required. Coordinate new meter size and installation with Texas Gas Service.

c. Natural gas piping shall be standard-weight black steel with threaded joints and malleable-iron threaded fittings.

7. Plumbing Fixtures

a. Plumbing fixtures shall be water efficient low flow:

1) 1.28 GPF Wall Mounted Flush Valve Water Closets

2) 0.5 GPF Urinals

3) 0.5 GPM Metered Lavatory Faucets

4) 1.8 GPM Kitchen Faucets

5) 2.0 GPM Showerhead

6) Drinking Fountain with Bottle Filler

b. Hardwired electronic hands-free controls shall be provided at all hand washing sinks, lavatories, urinals and water closets. All fixtures shall meet or

exceed the requirements of the State of Texas Water Conservation Act and City of Austin. Accessible fixtures shall meet the requirements of ADA and TAS.

Jose I. Guerra, Inc. adds the following comments:

c. Service sinks shall be enamel-coated cast-iron, wall mounted, with wall-mounted faucets that include a pale hook and threaded ends.

d. Emergency eye and face washes and showers shall be provided at locations determined by the design team. Floor drains shall be provided beneath emergency showers.

Jose I. Guerra, Inc. adds the following Plumbing Standards:

8. Plumbing Demolition

a. Plumbing piping not required in support of renovated buildings shall be removed back to active pipe mains and branches as required, and capped. No piping no longer needed shall be abandoned. Fixtures and equipment will first be presented to the Owner. If not desired, they will become the property of the Contractor and removed from the site.

9. Stormwater Piping

a. Underground stormwater piping shall be service weight hub and spigot cast iron and shall be assembled with hubbed and gasketed fittings. Above ground stormwater and stormwater-overflow piping shall be hubless, cast-iron soil pipe and fittings and shall be assembled with heavy-duty hubless-piping couplings and coupled joints.

10. Pipe Sizing Criteria

a. Domestic Water

1) 5 FPS max. velocity.

2) 3 psi /100 ft equivalent length max. pressure drop.

b. Sanitary and Grease Waste and Vent

1) Sized per Uniform Plumbing Code.

c. Stormwater and Overflow Drainage

1) 5 inches per hour rainfall rate, based on the 1 hour, 100-year storm data for the Austin, TX area.

d. Natural Gas

1) Based on pressure drop between regulators and pressure required at each piece of gas-fired equipment.

11. Elevator Pit Drainage System

a. A sump pump with a capacity of 50 GPM per cab in accordance with ASME A17.1 shall be provided within a minimum 2-foot x 2-foot x 2-foot structural pit in one corner of new elevator pits. If hydraulic elevators are used, the pit shall include a deeper, secondary sump with oil detection as well. The system shall include local audible and visible alarms.

b. Piping shall be extended to outside the building foundation, where it shall be provided with a sample port before connecting to the site's stormwater drainage piping.

G. Fire-Suppression Systems Standards

Unless otherwise noted or clarified, the technical criteria and standards listed below are those as provided by the City of Austin.

1. General

a. Provide service connection to the City of Austin potable water utility main for building fire protection water use. If existing water flow is insufficient, approved method(s) must be used to increase the water flow. Provide premises isolation via a double check valve backflow preventer assembly located as close as practical to the point of connection to the utility potable water main.

b. Provide automatic wet pipe sprinkler system for each station in accordance with NFPA 13. Piping shall be Schedule 40 black steel with threaded or mechanical joint couplings.

c. The D-B shall determine the location and arrangement of components such as indicating control valves, fire department connection, system riser components, water flow alarms, etc. Coordinate the location of the fire department hose valves and the fire department connection with the City of Austin Fire Department. Coordinate with the Owner regarding fire protection requirements for GAATN/Communications room. If deemed necessary by the Owner, provide fire protection for such spaces via clean agent fire suppression system(s) similar to Ansul Inergen or Sapphire System in accordance with NFPA 2001 - Standard on Clean Agent Fire Extinguishing Systems.

d. Any applied fire protection of building elements shall be as required by the IBC for the building's type of construction.

Jose I. Guerra, Inc. adds the following Fire Suppression Standards:

2. Sprinkler Piping

a. Sprinkler piping shall be welded or seamless black steel. Mains and cross-mains shall be rolled groove with ductile or malleable iron fittings and standard-weight mechanical couplings. Branch piping shall be threaded type with standard gray iron fittings. All black steel pipe shall be internally coated and warranted by the manufacturer to resist the effects of Microbiologically Influenced Corrosion (MIC).

3. Sprinklers

a. Sprinkler heads shall be new, automatic-type, and quick-response. They shall be upright, concealed pendent, or sidewall, and shall have appropriate temperature ratings, as required to meet the conditions of each space.

H. Fire-Alarm Systems Standards

Unless otherwise noted or clarified, the technical criteria and standards listed below are those as provided by the City of Austin.

1. General

a. A new automatic, addressable fire-alarm system shall be provided throughout Fire Stations 1 and 22.

b. The systems shall be specified and shall be designed in compliance with the 2015 International Fire Code with the City of Austin, TX Amendments, NFPA 72, and NFPA 70 Article 760.

c. Features of the system shall include audible and visual notification appliances throughout, a manual pull station at a continuously occupied location, smoke detectors outside of elevator lobbies, above the Fire Alarm Control Panel (FACP), and inside and immediately outside of sleeping areas, heat detectors in the Elevator Machine Room and Elevator Shaft, duct smoke detectors, HVAC shutdown, elevator control, and monitoring of the fire-sprinkler system flow and tamper switches.

d. The systems shall utilize an addressable FACP and a Digital Alarm Communication Transmitter (DACT) for remote monitoring of the system. Pathways shall be Class A for Signaling Line Circuits (SLC) and Class B for Initiation Device Circuits (IDC) and Notification Appliance Circuits (NAC).

I. Telecommunications Standards

Unless otherwise noted or clarified, the technical criteria and standards listed below are those as provided by the City of Austin.

1. General

a. The Owner has provided sample communications room layouts to be used for reference by the D-B. These are included in Appendix 2 - Communications Room. The D-B shall coordinate with the Owner during the design phase to determine size, location and requirements for communications room at each station. Fiber connectivity shall be provided, if available.

9 | Conceptual Project Estimate

A. General Statement

The Conceptual Project Estimates for AFD 1 / EMS 6 and AFD 3 are based primarily on the "Feasibility Test Fit Drawings for Proposed Conceptual Project w/ Keynotes" prepared by Lawrence Group.

The Conceptual Project Estimate for AFD 22 / EMS 12 is based on the programming documents for AFD Fire & EMS Station Prototypes that are included in Appendix E.

A. Feasibility Test Fit Dwgs. for Proposed Conceptual Project w/ Keynotes

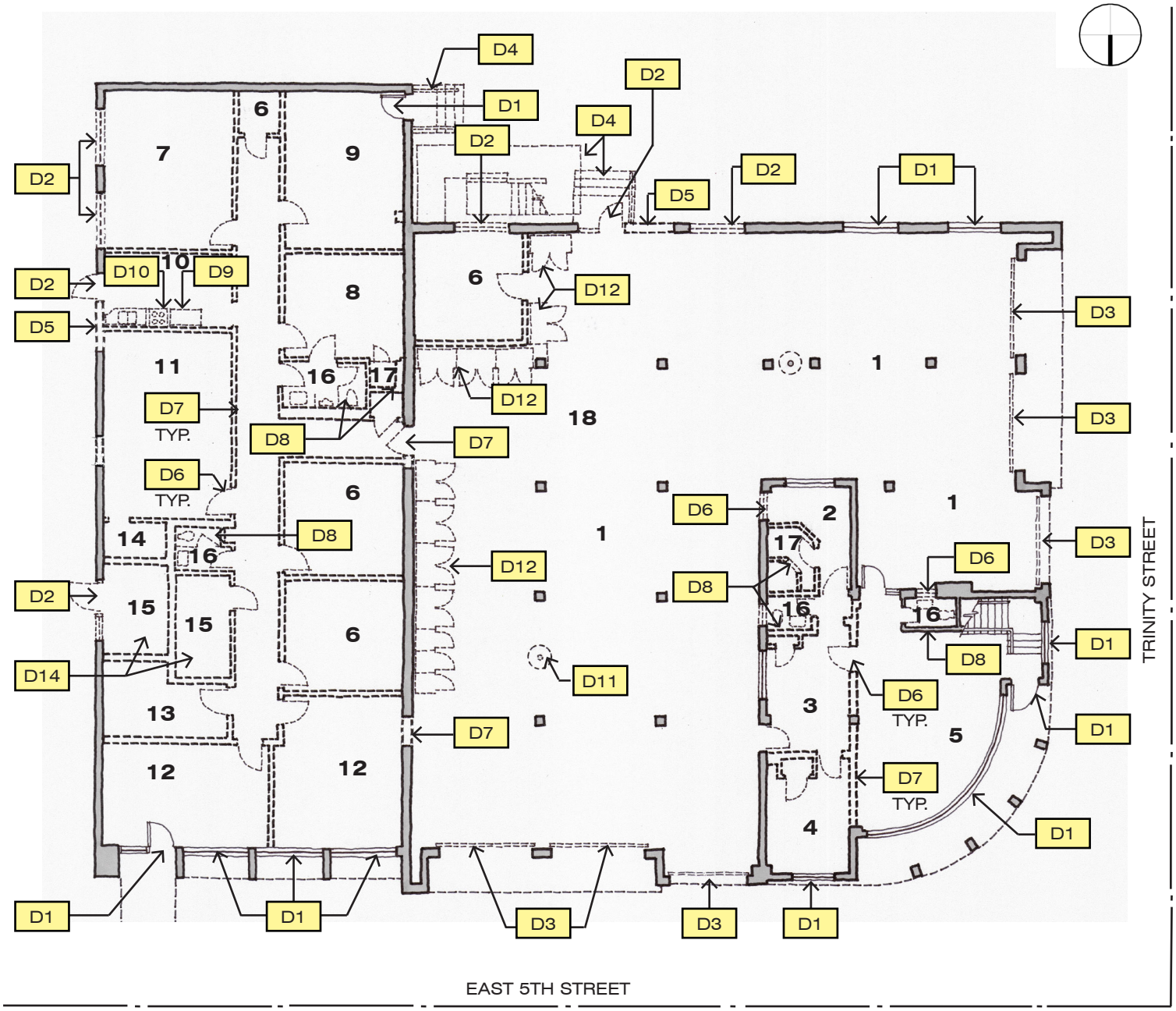

LEVEL 1 - DEMO FLOOR PLAN

1 APPARTAUS BAY
2 EMS OFFICE
3 EMS KITCHENETTE
4 EMS DAYROOM
5 DAY ROOM
6 STORAGE
7 COMMANDER'S OFFICE
8 COMMANDER'S SLEEPING QUARTERS
9 WORKOUT ROOM
10 KITCHEN
11 CONFERENCE ROOM
12 FIRE MUSEUM
13 FIRE MUSEUM OFFICE
14 COMMUNICAT'N CLOSET
15 MECHANICAL
16 BATHROOM
17 SHOWER
18 WORKOUT AREA

General Notes (not shown on drawings):

G1 Clean exterior masonry and restore as required.
G2 Deliver all removed building elements such as windows and doors to appropriate local recycling centers or per LEED guidelines.
G3 All new Furniture, Furnishings and Equipment (FFE) are N.I.C., U.N.O. N.I.C. Equipment includes refrigerators and all A/V equipment.
G4 All new telecommunication equipment and cabling related to telephone, data, alarms and paging systems in Communication Room (a.k.a., CMT Room) and elsewhere in building is N.I.C.
G5 All ceilings shall be suspended acoustical lay-in, U.N.O., except at Apparatus Room where there is no suspended or gypsum ceiling.
G6 For MEP scope, refer to Mechanical, Plumbing & Electrical Requirements & Guidelines in "Fire & EMS Statin Design Prototype Programming" document and "Mechanical, Electrical and Plumbing Standards" under "Chapter 8 Technical Criteria & Standards" in 50%DCM. (Note: The MEP Standards in Chapter 8 will be revised during the 100% DCM Phase after the City of Austin submits their content for this Chapter.)

Demolition Key Notes:

D1 Remove window and/or door (for recycling) and replace with new window and/or door per Architectural Key Note A6. (Note: Approx. size of existing window and/or door is shown on Demolition Plan.)
D2 Remove window and/or door (for recycling) and fill opening per Architectural Key Note A12 or leave open. (Note: Approx. size of existing window and/or door is shown on Demolition Plan.)
D3 Demolish large segmented overhead truck bay door or smaller garage door, including associated track system.
D4 Demolish exterior steel stair and concrete landing.
D5 Demolish portion of exterior masonry wall for new door, window or open space.
D6 Remove interior window and/or door (for recycling); demolish door frame.
D7 Demolish interior partition.
D8 Demolish plumbing fixtures; cap piping at slab or underside of structure above.
D9 Demolish cabinets and counters.
D10 Remove and appropriately discard all appliances.
D11 Demolish slide pole.
D12 Demolish turnout lockers.

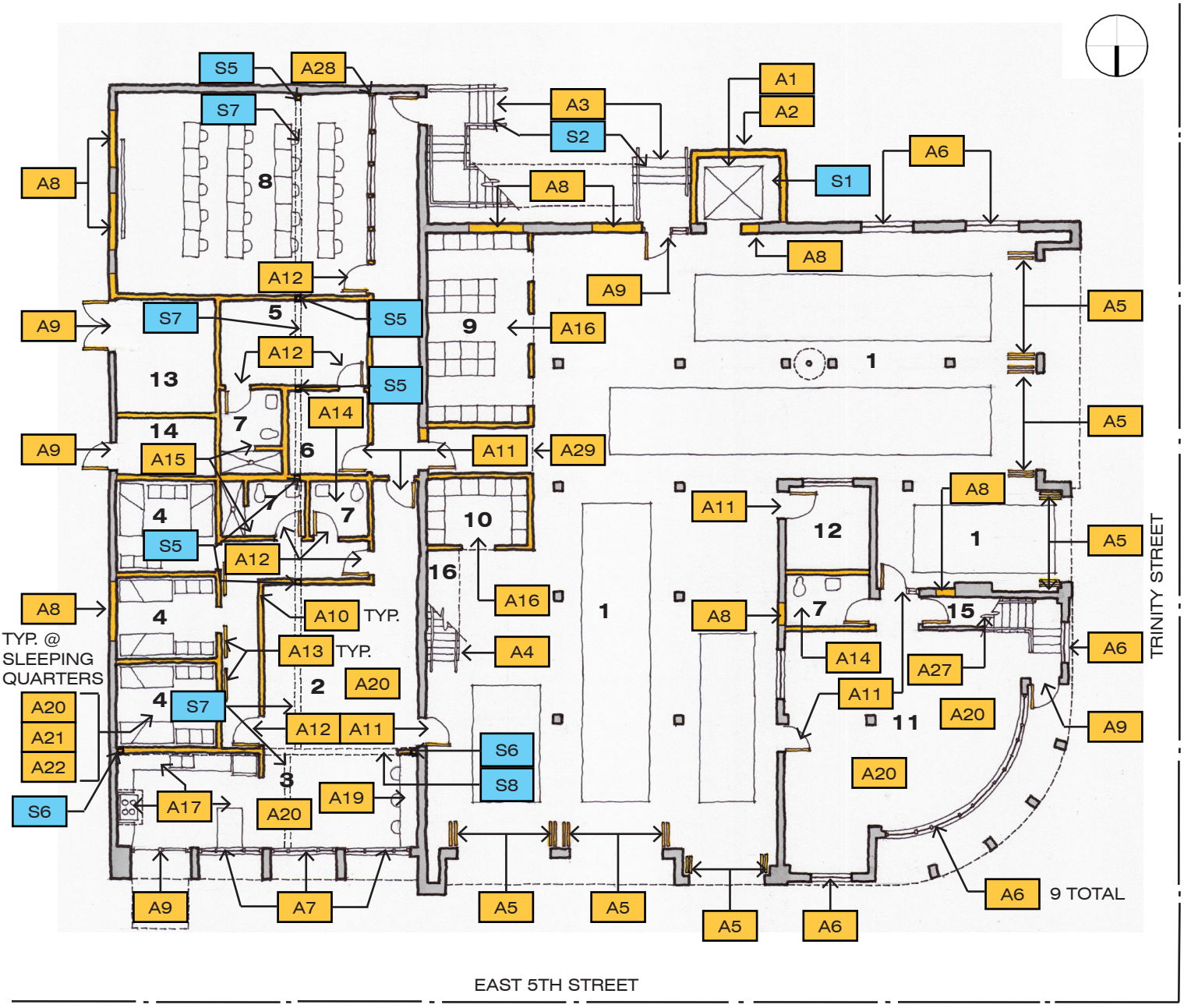

LEVEL 1 - PROPOSED FLOOR PLAN

1 APPARATUS BAY
2 EMS DAY ROOM
3 EMS KITCHEN & DINING
4 EMS SLEEPING QUARTERS
5 COMMANDER'S SLEEPING QUARTERS
6 COMMANDER'S OFFICE
7 BATHROOM
8 TRAINING CLASS ROOM
9 AFD TURNOUT GEAR
10 EMS TURNOUT GEAR
11 WORKOUT ROOM
12 SHOP
13 MECHANICAL
14 COMMUNICATION ROOM
15 MOP SINK
16 MEZZANINE STORAGE (ABOVE TURNOUT GEAR)

Architectural Key Notes:

A1 New MRL (Machine Room Less) traction elevator for second floor access and fire training purposes.
A2 New CMU shaft walls at elevator.
A3 New galvanized steel stair with concrete treads and steel channel stringers for second floor exiting and fire training purposes.
A4 New galvanized steel stair with high-performance paint with steel grating treads and steel channel stringers for access to mezzanine storage above turnout gear rooms.
A5 New industrial grade electrically operated high-speed bi-fold truck bay doors, 14-feet high, at existing 11-foot wide bay openings.
A6 New operable insulated glass sash-type window to match existing window, meet current codes and acquire approval of Austin Historic Commission; provide insect screens and lock.
A7 New operable insulated glass casement-type window to match existing window, meet current codes and acquire approval of Austin historic Commission; provide insect screens and lock.
A8 New exterior masonry infill to match adjacent cleaned masonry (per General Note G1). At interior, match adjacent wall finfish, either existing or new.
A9 New exterior painted HM door with no vision window, painted HM frame and, in some locations, a full-ht. translucent sidelight; acquire approval of Austin Historic Commission.
A10 New steel stud GWB partition shall extend from floor to underside of roof construction, U.N.O. All partitions in living areas shall include sound attenuation batts for acoustic isolation purposes.
A11 New interior solid core stained wood door with vision window and painted HM frame and, in some locations, a full-ht. translucent sidelight.
A12 New interior solid core stained wood door with no vision window, painted HM frame and, in some locations, a full-ht. translucent sidelight.
A13 New interior solid core stained wood door with exposed flat track (i.e., barn door) hardware, no frame or vision window.
A14 New TAS-compliant toilet room with fixtures (per Section 8 Plumbing Standards) and accessories; full-height ceramic tile walls and ceramic tile floor.
A15 New TAS-compliant toilet room (per Item 10 above) with walk-in shower; showers shall be thick-set ceramic tile.
A16 New Turnout Gear Lockers with solid wood shelving and heavy-duty hooks.
A17 New cabinets, countertops, commercial gas range with 6 high-speed burners (Vulcan Model 36L77R or BAE), Type II commercial vent hood with fire suppression system, stainless steel backsplash extending from stove top to vent hood, dishwasher, garbage disposal and commercial icemaker.
A19 New built-in storage cabinets, drawers and work counters.
A20 New ceiling fan with speed control switch.
A21 New bookshelf at each bed.
A22 New clothes lockers.
A27 New mop sink.
A28 New interior painted HM horizontal window with multiple lites.
A29 New galvanized steel guardrail at edge of mezzanine open to below.

Structural Key Notes:

S1 New pour-in-place concrete elevator pit.
S2 New concrete landings with concrete steps (if applicable) at new exterior stairs.
S5 New steel column to replace section of demolished center (masonry) bearing wall; to bear on existing center footing.
S6 New steel column supporting one end of new transverse steel beam; column to bear on existing footing at side wall.
S7 New steel beam to replace section of demolished center bearing wall.
S8 New steel transverse beam to support new offset north-south beams.

LEVEL 2 - DEMO FLOOR PLAN

1 SLEEPING QUARTERS
2 OFFICE
3 OFFICER'S QUARTERS
4 MEN'S LOCKER ROOM
5 MEN'S BATHROOM
6 DINING
7 KITCHEN
8 STUDY
9 WOMEN'S LOCKER ROOM AND BATHROOM
10 MOP SINK

General Notes (not shown on drawings):

G1 Clean exterior masonry and restore as required.
G2 Deliver all removed building elements such as windows and doors to appropriate local recycling centers or per LEED guidelines.
G3 All new Furniture, Furnishings and Equipment (FFE) are N.I.C., U.N.O. N.I.C. Equipment includes refrigerators and all A/V equipment.
G4 All new telecommunication equipment and cabling related to telephone, data, alarms and paging systems in Communication Room (a.k.a., CMT Room) and elsewhere in building is N.I.C.
G5 All ceilings shall be suspended acoustical lay-in, U.N.O., except at Apparatus Room where there is no suspended or gypsum ceiling.
G6 For MEP scope, refer to Mechanical, Plumbing & Electrical Requirements & Guidelines in "Fire & EMS Statin Design Prototype Programming" document and "Mechanical, Electrical and Plumbing Standards" under "Chapter 8 Technical Criteria & Standards" in 50%DCM. (Note: The MEP Standards in Chapter 8 will be revised during the 100% DCM Phase after the City of Austin submits their content for this Chapter.)

Demolition Key Notes:

D1 Remove window and/or door (for recycling) and replace with new window and/or door per Architectural Key Note A6. (Note: Approx. size of existing window and/or door is shown on Demolition Plan.)
D2 Remove window and/or door (for recycling) and fill opening per Architectural Key Note A12 or leave open. (Note: Approx. size of existing window and/or door is shown on Demolition Plan.)
D4 Demolish exterior steel stair and concrete landing.
D5 Demolish portion of exterior masonry wall for new door, window or open space.
D6 Remove interior window and/or door (for recycling); demolish door frame.
D7 Demolish interior partition.
D8 Demolish plumbing fixtures; cap piping at slab or underside of structure above.
D9 Demolish cabinets and counters.
D10 Remove and appropriately discard all appliances.
D11 Demolish slide pole.
D13 Demolish food lockers.
D14 Demolish clothes lockers.
D15 Demolish interior stairs.

LEVEL 2 - PROPOSED FLOOR PLAN

1	SLEEPING QUARTERS	5	STUDY
2	BATHROOM	6	DAY ROOM
3	KITCHEN	7	PATIO
4	DINING	8	PANTRY w/ REF. / FREEZER

Architectural Key Notes:

A2 New CMU shaft walls at elevator.
A3 New galvanized steel stair with concrete treads and steel channel stringers for second floor exiting and fire training purposes.
A6 New operable insulated glass sash-type window to match existing window, meet current codes and acquire approval of Austin Historic Commission; provide insect screens and lock.
A8 New exterior masonry infill to match adjacent cleaned masonry (per General Note G1). At interior, match adjacent wall finfish, either existing or new.
A9 New exterior painted HM door with no vision window, painted HM frame and, in some locations, a full-ht. translucent sidelight; acquire approval of Austin Historic Commission.
A10 New steel stud GWB partition shall extend from floor to underside of roof construction, U.N.O. All partitions in living areas shall include sound attenuation batts for acoustic isolation purposes.
A11 New interior solid core stained wood door with vision window and painted HM frame and, in some locations, a full-ht. translucent sidelight.
A12 New interior solid core stained wood door with no vision window, painted HM frame and, in some locations, a full-ht. translucent sidelight.
A13 New interior solid core stained wood door with exposed flat track (i.e., barn door) hardware, no frame or vision window.
A15 New TAS-compliant toilet room (per Item 10 above) with walk-in shower; showers shall be thick-set ceramic tile.
A17 New cabinets, countertops, commercial gas range with 6 high-speed burners (Vulcan Model 36L77R or BAE), Type II commercial vent hood with fire suppression system, stainless steel backsplash extending from stove top to vent hood, dishwasher, garbage disposal and commercial icemaker.
A18 New built-in pantry food lockers and shelving.
A19 New built-in storage cabinets, drawers and work counters.
A20 New ceiling fan with speed control switch.
A21 New bookshelf at each bed.
A22 New clothes lockers.
A23 New full-ht. sliding glass doors.
A24 New shade structure.
A25 New roof deck paving system.
A26 New galvanized high-performance coated steel fence and gate.

Structural Key Notes:

S3 New support beam to eliminate columns in middle of space.
S4 New roof structure over Dining Room.

B. Cost Estimate of Proposed Conceptual Project

SUMMARY REPORT

CITY OF AUSTIN FIRE STATION NO.01 3/2/2019

--SUMMARY REPORT--

SUMMARY OF COA - FIRE STATION NO.01
CITY OF AUSTIN FIRE STATION NO.01
401 E. 5TH STREET

LAWRENCE GROUP
JOB No.: COA FS01

		TOTAL BDSF	COST PER/ BDSF	TOTAL COST	
COA - FIRE STATION NO.01		**13331**	**$189.51**	**$2,526,366**	
DIVISION		**LABOR**	**MATL/EQUIP**	**UNIT PRICE**	**TOTAL**
01-GENERAL REQUIREMENTS		$67,500	$52,500	$9.00	$120,000
02-EXISTING CONDITIONS		$21,169	$12,453	$2.52	$33,622
03-CONCRETE		$8,065	$15,925	$1.80	$23,990
04-MASONRY		$26,556	$21,051	$3.57	$47,607
05-METALS		$28,417	$58,356	$6.51	$86,773
06-WOOD & PLASTIC & COMPOSITES		$7,467	$7,467	$1.12	$14,935
07-THERMAL & WATERPROOFING		$17,078	$17,189	$2.57	$34,267
08-OPENINGS		$37,422	$131,887	$12.70	$169,309
09-FINISHES		$93,530	$90,654	$13.82	$184,184
10-SPECIALTIES		$10,219	$47,593	$4.34	$57,812
11-EQUIPMENT		$881	$5,175	$0.45	$6,056
14-CONVEYING SYSTEM			$130,000	$9.75	$130,000
21-FIRE SUPPERSSION		$26,669	$26,669	$4.00	$53,338
22-PLUMBING		$74,312	$72,275	$11.00	$146,587
23-HVAC		$107,732	$161,489	$20.20	$269,221
26-ELECTRICAL		$65,999	$97,602	$12.27	$163,601
27-COMMUNICATIONS		$40,003	$40,003	$6.00	$80,006
28-ELECTRONIC SAFETY & SECURITY		$26,669	$26,669	$4.00	$53,338
32-EXTERIOR IMPROVEMENTS		$17,426	$27,529	$3.37	$44,955
DIRECT COST 5		**$677,114**	**$1,042,485**	**$128.99**	**$1,719,599**
GC OVERHEAD & GEN CONDITIONS	20.00%				$343,920
GC FEE	5.00%				$103,176
CONSTUCTION CONTINGENCY	10.00%				$216,669
ESCALATION (2 YEARS AT 3%EACH)	6.00%				$143,002
TOTAL OF COA - FIRE STATION NO.01				**$189.51**	**$2,526,366**

DETAIL REPORT

CITY OF AUSTIN FIRE STATION NO.01

LAWRENCE GROUP
900 EAST 6TH STREET SUITE 105
AUSTIN, TX

--DETAIL REPORT--

PROJECT
ESTIMATE

DATE: 03/02/2019 01:35:12 PM
JOB NO.: COA FS01
PROJECT: CITY OF AUSTIN FIRE STATION NO.01
AUSTIN, TX

PREPARED BY:
SUNLAND GROUP
SAN ANTONIO, TEXAS

CODE	DESCRIPTION	QTY	UNIT LABOR	TOTAL LABOR	UNIT MATL	TOTAL MATL	UNIT PRICE	TOTAL
	COA - FIRE STATION NO.01							
	01-GENERAL REQUIREMENTS							
1020	**ALLOWANCES**							
	GENERAL REQUIREMENTS	1 ALLO	$47,500.00	$47,500	$47,500.00	$47,500	$95,000.00	$95,000
	PHASING COSTS	1 ALLO	$20,000.00	$20,000	$5,000.00	$5,000	$25,000.00	$25,000
	TOTAL OF ALLOWANCES			**$67,500**		**$52,500**		**$120,000**
	TOTAL OF 01-GENERAL REQUIREMENTS			**$67,500**		**$52,500**		**$120,000**
	02-EXISTING CONDITIONS							
2060	**BUILDING DEMOLITION**							
	DEMOLITION - INTERIOR GUTTING - ALL TRADES	7,325 SF	$2.89	$21,169	$1.70	$12,453	$4.59	$33,622
	TOTAL OF BUILDING DEMOLITION			**$21,169**		**$12,453**		**$33,622**
	TOTAL OF 02-EXISTING CONDITIONS			**$21,169**		**$12,453**		**$33,622**
	03-CONCRETE							
3304	**FOUNDATION SYSTEMS**							
	101.6 MM(4") STANDARD SLAB ON GRADE	100 SF	$2.48	$248	$2.69	$269	$5.17	$517
	24" DRILLED PIERS	80 LF	$75.00	$6,000	$125.00	$10,000	$200.00	$16,000
	GALV. WELDED STEEL TRENCH GRATE	217 SF	$4.69	$1,017	$23.31	$5,056	$28.00	$6,073
	GRADE BEAMS	4 CY	$200.00	$800	$150.00	$600	$350.00	$1,400
	TOTAL OF FOUNDATION SYSTEMS			**$8,065**		**$15,925**		**$23,990**
	TOTAL OF 03-CONCRETE			**$8,065**		**$15,925**		**$23,990**
	04-MASONRY							
4220	**CONCRETE MASONRY UNIT**							
	8 X 8 X 16 CONCRETE MASONRY UNIT WALL	1,500 SF	$7.50	$11,250	$7.50	$11,250	$15.00	$22,500
	BRICK VENEER WALL	1,500 SF	$6.00	$9,000	$6.00	$9,000	$12.00	$18,000
	TOTAL OF CONCRETE MASONRY UNIT			**$20,250**		**$20,250**		**$40,500**
4990	**MASONRY RENOVATION**							
	RE-POINT & CLEAN BRICK	10,010 SF	$0.63	$6,306	$0.08	$801	$0.71	$7,107
	TOTAL OF MASONRY RENOVATION			**$6,306**		**$801**		**$7,107**
	TOTAL OF 04-MASONRY			**$26,556**		**$21,051**		**$47,607**
	05-METALS							
5120	**STRUCTURAL STEEL**							
	1-1/2" GALV. METAL ROOF DECK, OPEN TYPE, F.P.	496 SF	$0.91	$451	$1.91	$947	$2.82	$1,399
	MED SPAN, LT LD, STL FRM, MTL JOIST	7 TON	$2,500.00	$16,250	$3,000.00	$19,500	$5,500.00	$35,750
	MISC. STEEL (GAURD RAILS, ETC.)	3 TON	$2,500.00	$7,500	$3,000.00	$9,000	$5,500.00	$16,500
	TOTAL OF STRUCTURAL STEEL			**$24,201**		**$29,447**		**$53,649**
5510	**METAL STAIRS**							
	STEEL STAIR TREADS W/STRINGERS PAN TYPE	30 VLF	$140.52	$4,216	$963.63	$28,909	$1,104.15	$33,125
	TOTAL OF METAL STAIRS			**$4,216**		**$28,909**		**$33,125**

CITY OF AUSTIN FIRE STATION NO.01

LAWRENCE GROUP
900 EAST 6TH STREET SUITE 105
AUSTIN, TX

--DETAIL REPORT--

PROJECT
ESTIMATE

DATE: 03/02/2019 01:35:12 PM
JOB NO.: COA FS01
PROJECT: CITY OF AUSTIN FIRE STATION NO.01
AUSTIN, TX

PREPARED BY:
SUNLAND GROUP
SAN ANTONIO, TEXAS

CODE	DESCRIPTION	QTY	UNIT LABOR	TOTAL LABOR	UNIT MATL	TOTAL MATL	UNIT PRICE	TOTAL
	TOTAL OF 05-METALS			**$28,417**		**$58,356**		**$86,773**
	06-WOOD & PLASTIC & COMPOSITES							
6111	**LIGHT WOODEN STRUCTURES FRAME**							
	MISC. BLOCKING	13,334 BDSF	$0.56	$7,467	$0.56	$7,467	$1.12	$14,935
	TOTAL OF LIGHT WOODEN STRUCTURES FRAME			**$7,467**		**$7,467**		**$14,935**
	TOTAL OF 06-WOOD & PLASTIC & COMPOSITES			**$7,467**		**$7,467**		**$14,935**
	07-THERMAL & WATERPROOFING							
7250	**FIREPROOFING**							
	MISC. FIREPROOFING	13,334 BDSF	$0.56	$7,467	$0.56	$7,467	$1.12	$14,935
	TOTAL OF FIREPROOFING			**$7,467**		**$7,467**		**$14,935**
7413	**PREFORMED METAL ROOFING**							
	4 PLY BUILT-UP ROOFING WITH FIBERGLASS AND GRAVEL	496 SF	$3.75	$1,860	$3.75	$1,860	$7.50	$3,720
	5" BOX GUTTERS WITH DOWNSPOUTS	30 LF	$5.48	$164	$3.38	$101	$8.86	$266
	RIGID INSULATION 1-1/2" THICK	496 SF	$0.24	$119	$0.59	$293	$0.83	$412
	TOTAL OF PREFORMED METAL ROOFING			**$2,143**		**$2,254**		**$4,397**
7900	**JOINT SEALANTS**							
	MISC. CAULKING	13,334 BDSF	$0.56	$7,467	$0.56	$7,467	$1.12	$14,935
	TOTAL OF JOINT SEALANTS			**$7,467**		**$7,467**		**$14,935**
	TOTAL OF 07-THERMAL & WATERPROOFING			**$17,078**		**$17,189**		**$34,267**
	08-OPENINGS							
8247	**SC WOOD DOORS & HM FRAMES**							
	3-0X7-0 INT SOLID CORE DOOR & HOL MTL FRAME	38 EA	$250.00	$9,500	$1,250.00	$47,500	$1,500.00	$57,000
	TOTAL OF SC WOOD DOORS & HM FRAMES			**$9,500**		**$47,500**		**$57,000**
8251	**HOL MTL DOORS-FRAMES & HDWR**							
	3-0X7-0 INT HOL MTL DOOR & FRAME W/HARDWARE - UL LABELED	9 EA	$250.00	$2,250	$1,750.00	$15,750	$2,000.00	$18,000
	TOTAL OF HOL MTL DOORS-FRAMES & HDWR			**$2,250**		**$15,750**		**$18,000**
8360	**OVERHEAD DOORS**							
	20-0X14-0 OVERHEAD ROLL-UP DOOR ELECTRIC	6 EA	$3,206.61	$19,240	$7,366.90	$44,201	$10,573.51	$63,441
	TOTAL OF OVERHEAD DOORS			**$19,240**		**$44,201**		**$63,441**
8370	**SLIDING GLASS DOORS**							
	SLIDING GLASS & ALUM DOOR W/TEMPERED GLASS	140 SF	$1.80	$252	$28.03	$3,924	$29.83	$4,176
	TOTAL OF SLIDING GLASS DOORS			**$252**		**$3,924**		**$4,176**
8520	**ALUMINUM WINDOWS**							
	ALUMINUM FRM FIXED TYPE WINDOW - 6.35 MM(1/4") CLEAR	576 SF	$10.73	$6,180	$35.61	$20,511	$46.34	$26,692
	TOTAL OF ALUMINUM WINDOWS			**$6,180**		**$20,511**		**$26,692**
	TOTAL OF 08-OPENINGS			**$37,422**		**$131,887**		**$169,309**

CITY OF AUSTIN FIRE STATION NO.01

LAWRENCE GROUP
900 EAST 6TH STREET SUITE 105
AUSTIN, TX

PREPARED BY:
SUNLAND GROUP
SAN ANTONIO, TEXAS

--DETAIL REPORT--

PROJECT
ESTIMATE

DATE: 03/02/2019 01:35:12 PM
JOB NO.: COA FS01
PROJECT: CITY OF AUSTIN FIRE STATION NO.01
AUSTIN, TX

CODE	DESCRIPTION	QTY	UNIT LABOR	TOTAL LABOR	UNIT MATL	TOTAL MATL	UNIT PRICE	TOTAL
	09-FINISHES							
9100	**INTERIOR FINISH OUT**							
	1/2" WP GYPSUM BOARD/INSTALLED/TAPED & FINISHED	2,596 SF	$1.50	$3,894	$0.50	$1,298	$2.00	$5,192
	2-0X4-0 SUSP ACOUSTIC CEILING 5/8" MINERAL TILE	6,764 SF	$0.47	$3,179	$1.01	$6,832	$1.48	$10,011
	4-1/4" X 4-1/4" CERAMIC TILE TO WALLS	2,596 SF	$4.00	$10,384	$4.00	$10,384	$8.00	$20,768
	5/8" GYPSUM BOARD/INSTALLED/TAPED & FINISHED	15,154 SF	$1.50	$22,731	$0.50	$7,577	$2.00	$30,308
	5/8" GYPSUM WALLBOARD CEILING, 1 LAYER, FIRE RATED	435 SF	$1.50	$653	$0.75	$326	$2.25	$979
	ACOUSTICAL WALL PANELS	220 SF	$3.03	$668	$7.14	$1,573	$10.17	$2,241
	CONCRETE FLOOR SEALER	4,625 SF	$0.08	$370	$0.11	$509	$0.19	$879
	MTL STUD PARTITION, 3-5/8"	7,577 SF	$1.00	$7,577	$0.50	$3,789	$1.50	$11,366
	PAINT TO CONCRETE WALLS-ONE COAT PRIMER, ONE COAT PAINT	15,900 SF	$1.00	$15,900	$0.50	$7,950	$1.50	$23,850
	PAINT TO GYPSUM BOARD WALLS USING ROLLER	15,154 SF	$1.00	$15,154	$0.50	$7,577	$1.50	$22,731
	POLYSTYRENE RIGID WALL INSULATION, 25.4 MM(1") THICK	1,500 SF	$0.59	$885	$0.49	$735	$1.08	$1,620
	SUSPENSION SYSTEM FOR GYPSUM BOARD CEILING	435 SF	$4.07	$1,770	$0.96	$418	$5.03	$2,188
	THIN SET NATURAL CLAY CERAMIC TILE FLOOR AND BASE	435 SF	$6.26	$2,723	$5.97	$2,597	$12.23	$5,320
	VINYL TILE 1/8" X 12" X 12"	6,763 SF	$1.13	$7,642	$5.78	$39,090	$6.91	$46,732
	TOTAL OF INTERIOR FINISH OUT			**$93,530**		**$90,654**		**$184,184**
	TOTAL OF 09-FINISHES			**$93,530**		**$90,654**		**$184,184**
	10-SPECIALTIES							
10160	**TOILET PARTITIONS & SCREENS**							
	12" X 15" X 36" DOUBLE TIER LOCKERS	66 EA	$18.66	$1,232	$221.75	$14,636	$240.41	$15,867
	CABINETRY MILLWORK	144 LF	$37.10	$5,342	$185.45	$26,705	$222.55	$32,047
	DOOR SIGN, 4" X 8"	38 EA	$11.69	$444	$37.12	$1,411	$48.81	$1,855
	FIRE EXTINGUISHER CABINET, 8" X 16" X 38"	2 EA	$127.15	$254	$209.54	$419	$336.69	$673
	TOILET PARTITION AND ACCESSORIES	3 EA	$282.10	$846	$774.35	$2,323	$1,056.45	$3,169
	TURNOUT LOCKERS	80 LF	$26.25	$2,100	$26.25	$2,100	$52.50	$4,200
	TOTAL OF TOILET PARTITIONS & SCREENS			**$10,219**		**$47,593**		**$57,812**
	TOTAL OF 10-SPECIALTIES			**$10,219**		**$47,593**		**$57,812**
	11-EQUIPMENT							
11400	**FOOD SERVICE EQUIPMENT**							
	COMMERCIAL GARBAGE DISPOSAL	1 EA	$200.81	$201	$816.39	$816	$1,017.20	$1,017
	COMMERCIAL OVEN - GAS	1 EA	$196.80	$197	$2,040.00	$2,040	$2,236.80	$2,237
	DISHWASHER RACK TYPE	1 EA	$196.80	$197	$876.09	$876	$1,072.89	$1,073
	ICE MACHINE 200 LB/DAY	1 EA	$41.03	$41	$1,069.83	$1,070	$1,110.86	$1,111
	SHEET METAL EQUIPMENT HOOD 36" X 36"	1 EA	$245.12	$245	$372.89	$373	$618.01	$618
	TOTAL OF FOOD SERVICE EQUIPMENT			**$881**		**$5,175**		**$6,056**
	TOTAL OF 11-EQUIPMENT			**$881**		**$5,175**		**$6,056**

CITY OF AUSTIN FIRE STATION NO.01

LAWRENCE GROUP
900 EAST 6TH STREET SUITE 105
AUSTIN, TX

--DETAIL REPORT--

PROJECT
ESTIMATE

DATE: 03/02/2019 01:35:12 PM
JOB NO.: COA FS01
PROJECT: CITY OF AUSTIN FIRE STATION NO.01
AUSTIN, TX

PREPARED BY:
SUNLAND GROUP
SAN ANTONIO, TEXAS

CODE	DESCRIPTION	QTY	UNIT LABOR	TOTAL LABOR	UNIT MATL	TOTAL MATL	UNIT PRICE	TOTAL
	14-CONVEYING SYSTEM							
14200	**ELEVATORS**							
	ELEVATOR	2 STOP			$65,000.00	$130,000	$65,000.00	$130,000
	TOTAL OF ELEVATORS					**$130,000**		**$130,000**
	TOTAL OF 14-CONVEYING SYSTEM					**$130,000**		**$130,000**
	21-FIRE SUPPERSSION							
21501	**SPRINKLER SYSTEMS**							
	FIRE SPRINKLER SYSTEM	13,334 BDSF	$2.00	$26,669	$2.00	$26,669	$4.00	$53,338
	TOTAL OF SPRINKLER SYSTEMS			**$26,669**		**$26,669**		**$53,338**
	TOTAL OF 21-FIRE SUPPERSSION			**$26,669**		**$26,669**		**$53,338**
	22-PLUMBING							
22027	**PLUMBING SYSTEMS**							
	8 GPH ELECTRIC WATER COOLER - WALL MOUNTED	1 EA	$396.79	$397	$1,021.85	$1,022	$1,418.64	$1,419
	COPPER PIPE & FITTINGS (1/2" TO 4" DIA. PIPING)	24 EA	$891.19	$21,389	$899.53	$21,589	$1,790.72	$42,977
	DOMESTIC WATER HEATER GAS - 196.8 L(52 GAL.)	1 EA	$447.08	$447	$924.88	$925	$1,371.96	$1,372
	FIBERGLASS SHOWER UNIT	6 EA	$212.13	$1,273	$648.35	$3,890	$860.48	$5,163
	FLOOR MOUNTED WATER CLOSET	8 EA	$199.35	$1,595	$218.93	$1,751	$418.28	$3,346
	JANITOR SINK - FLOOR TYPE	1 EA	$240.25	$240	$930.23	$930	$1,170.48	$1,170
	MEDIUM DUTY AND HEAVY DUTY CAST IRON FLOOR DRAINS	6 EA	$267.08	$1,602	$937.99	$5,628	$1,205.07	$7,230
	PVC VENT PIPING	24 EA	$195.60	$4,694	$43.31	$1,039	$238.91	$5,734
	RESIDENTIAL WATER HEATER & HOSE BIBB PIPING	4 EA	$208.65	$835	$114.92	$460	$323.57	$1,294
	S.S. SINK, DOUBLE BOWL 32 X 21 X 7	1 EA	$221.08	$221	$902.05	$902	$1,123.13	$1,123
	SHOWER VALVE, DRAIN FOR CERAMIC TILE SHOWER	6 EA	$1,813.40	$10,880	$1,556.84	$9,341	$3,370.24	$20,221
	VALVES & HYDRANTS	9 EA	$36.28	$327	$292.43	$2,632	$328.71	$2,958
	WALL HUNG 20" BY 18" WHITE SINGLE BOWL LAVATORY	8 EA	$771.85	$6,175	$701.90	$5,615	$1,473.75	$11,790
	WASTE PIPE & FITTINGS	24 EA	$1,009.89	$24,237	$689.59	$16,550	$1,699.48	$40,788
	TOTAL OF PLUMBING SYSTEMS			**$74,312**		**$72,275**		**$146,587**
	TOTAL OF 22-PLUMBING			**$74,312**		**$72,275**		**$146,587**
	23-HVAC							
23650	**HVAC SYSTEM**							
	1000 MBH NATURAL GAS SUPPLY	1 EA	$2,786.46	$2,786	$2,155.98	$2,156	$4,942.44	$4,942
	70.34 KW (20 TON) AIR COOLED PACKAGED SCROLL CHILLER W/MECH. ROOM PIPING	1 EA	$16,321.40	$16,321	$60,694.90	$60,695	$77,016.30	$77,016
	COMPRESSED AIR SYSTEM FOR A MAINT. SHOP	1 EA	$11,798.58	$11,799	$13,776.44	$13,776	$25,575.02	$25,575
	DUCTWORK	13,334 SF	$2.25	$30,002	$2.25	$30,002	$4.50	$60,005
	GARAGE VEHICLE EXHAUST SYSTEM (3000 CMF PER)	18,000 CFM	$1.40	$25,200	$0.87	$15,660	$2.27	$40,860
	GAS FIRED UNIT HEATER, 8.79 KW(30 MBH)	6 EA	$560.81	$3,365	$1,723.48	$10,341	$2,284.29	$13,706

CITY OF AUSTIN FIRE STATION NO.01

LAWRENCE GROUP
900 EAST 6TH STREET SUITE 105
AUSTIN, TX

--DETAIL REPORT--

PROJECT
ESTIMATE

DATE: 03/02/2019 01:35:12 PM
JOB NO.: COA FS01
PROJECT: CITY OF AUSTIN FIRE STATION NO.01
AUSTIN, TX

PREPARED BY:
SUNLAND GROUP
SAN ANTONIO, TEXAS

CODE	DESCRIPTION	QTY	UNIT LABOR	TOTAL LABOR	UNIT MATL	TOTAL MATL	UNIT PRICE	TOTAL
	HOT WATER BOILER ONLY, GAS FIRED 250 MBH	1 EA	$2,523.85	$2,524	$3,922.96	$3,923	$6,446.81	$6,447
	HVAC CONTROLS	13,334 SF	$1.18	$15,735	$1.87	$24,935	$3.05	$40,670
	TOTAL OF HVAC SYSTEM			**$107,732**		**$161,489**		**$269,221**
	TOTAL OF 23-HVAC			**$107,732**		**$161,489**		**$269,221**
	26-ELECTRICAL							
26001	**ELECTRICAL SYSTEM**							
	BUILDING GROUNDING	2 EA	$394.87	$790	$311.02	$622	$705.89	$1,412
	CEILING FANS	20 EA	$42.40	$848	$206.77	$4,135	$249.17	$4,983
	ELECTRICAL PANELS	2 EA	$1,565.33	$3,131	$3,455.25	$6,911	$5,020.58	$10,041
	LIGHT FIXTURES	138 EA	$112.50	$15,525	$487.50	$67,275	$600.00	$82,800
	LIGHTING PROTECTION SYSTEM	5 EA	$267.11	$1,336	$181.21	$906	$448.32	$2,242
	WIRING DEVICES, CONDUIT, WIRE, BOXES AND COVERS	102 EA	$435.00	$44,370	$174.05	$17,753	$609.05	$62,123
	TOTAL OF ELECTRICAL SYSTEM			**$65,999**		**$97,602**		**$163,601**
	TOTAL OF 26-ELECTRICAL			**$65,999**		**$97,602**		**$163,601**
	27-COMMUNICATIONS							
27005	**COMMUNICATIONS SYSTEMS**							
	A/V SYSTEM INFRASTRUCTURE	13,334 BDSF	$1.00	$13,334	$1.00	$13,334	$2.00	$26,669
	COMMUNICATION SYSTEM INFRASTRUCTURE	13,334 BDSF	$1.00	$13,334	$1.00	$13,334	$2.00	$26,669
	SECURITY SYSTEM INFRASTRUCTURE	13,334 BDSF	$1.00	$13,334	$1.00	$13,334	$2.00	$26,669
	TOTAL OF COMMUNICATIONS SYSTEMS			**$40,003**		**$40,003**		**$80,006**
	TOTAL OF 27-COMMUNICATIONS			**$40,003**		**$40,003**		**$80,006**
	28-ELECTRONIC SAFETY & SECURITY							
28721	**FIRE ALARM SYSTEMS**							
	FIRE ALARM SYSTEM	13,334 BDSF	$2.00	$26,669	$2.00	$26,669	$4.00	$53,338
	TOTAL OF FIRE ALARM SYSTEMS			**$26,669**		**$26,669**		**$53,338**
	TOTAL OF 28-ELECTRONIC SAFETY & SECURITY			**$26,669**		**$26,669**		**$53,338**
	32-EXTERIOR IMPROVEMENTS							
32444	**CHAIN LINK FENCE & GATES**							
	STEEL FENCE WITH GATE	15 SF	$15.00	$225	$41.25	$619	$56.25	$844
	TOTAL OF CHAIN LINK FENCE & GATES			**$225**		**$619**		**$844**
32510	**WALKWAYS AND PADS**							
	SIDEWALKS	1,200 SF	$5.81	$6,972	$2.21	$2,652	$8.02	$9,624
	TOTAL OF WALKWAYS AND PADS			**$6,972**		**$2,652**		**$9,624**
32514	**BRICK PAVING**							
	BRICK PAVERS ON SAND BED	325 SF	$6.00	$1,950	$6.00	$1,950	$12.00	$3,900
	SHADE STRUCTURE	224 SF	$7.55	$1,691	$7.50	$1,680	$15.05	$3,371
	TOTAL OF BRICK PAVING			**$3,641**		**$3,630**		**$7,271**
32515	**CONCRETE PAVING**							
	PARKING LOT	5,400 SF	$1.22	$6,588	$3.82	$20,628	$5.04	$27,216

CITY OF AUSTIN FIRE STATION NO.01

LAWRENCE GROUP
900 EAST 6TH STREET SUITE 105
AUSTIN, TX

--DETAIL REPORT--

PROJECT
ESTIMATE

DATE: 03/02/2019 01:35:12 PM
JOB NO.: COA FS01
PROJECT: CITY OF AUSTIN FIRE STATION NO.01
AUSTIN, TX

PREPARED BY:
SUNLAND GROUP
SAN ANTONIO, TEXAS

CODE	DESCRIPTION	QTY	UNIT LABOR	TOTAL LABOR	UNIT MATL	TOTAL MATL	UNIT PRICE	TOTAL
	TOTAL OF CONCRETE PAVING			**$6,588**		**$20,628**		**$27,216**
	TOTAL OF 32-EXTERIOR IMPROVEMENTS			**$17,426**		**$27,529**		**$44,955**
	TOTAL DIRECT COST			**$677,114**		**$1,042,485**		**$1,719,599**
	GC OVERHEAD & GEN CONDITIONS	20.00%		$135,423		$208,497		$343,920
	GC FEE	5.00%		$40,627		$62,549		$103,176
	CONSTUCTION CONTINGENCY	10.00%		$85,316		$131,353		$216,669
	ESCALATION (2 YEARS AT 3%EACH)	6.00%		$56,309		$86,693		$143,002
	TOTAL OF COA - FIRE STATION NO.01			**$994,789**		**$1,531,577**		**$2,526,366**

C. Summary Schedule of Design and Construction Phasing

Sunland GROUP

Classic Schedule Layout

Activity ID	Activity Name	Original Duration	Start	Finish
DCM-1	COA Fire Station Renov	893	03-Jun-19	02-Nov-22
DCM-1.2	Milestones	570	16-Jul-20	21-Sep-22
A1000	Substantial Completion	0		21-Sep-22
A1190	Start Demo/Construction	0	16-Jul-20	
DCM-1.1	Design	293	03-Jun-19	15-Jul-20
DCM-1.1.2	Schematic Design	84	03-Jun-19	27-Sep-19
A1010	Schematic Design	56	03-Jun-19*	19-Aug-19
A1015	Owner QMD	14	20-Aug-19	06-Sep-19
A1016	AE Team Response	14	09-Sep-19	26-Sep-19
A1017	COA Next Phase NTP	0	27-Sep-19	
DCM-1.1.3	Design Development	84	27-Sep-19	23-Jan-20
A1020	Design Development	56	27-Sep-19	13-Dec-19
A1022	Owner QMD	14	16-Dec-19	02-Jan-20
A1024	AE Team Response	14	03-Jan-20	22-Jan-20
A1026	COA Next Phase NTP	0	23-Jan-20	
DCM-1.1.4	Construction Documents	105	23-Jan-20	18-Jun-20
A1030	Construction Documents	77	23-Jan-20	08-May-20
A1390	Owner QMD	14	11-May-20	28-May-20
A1400	AE Team Response	14	29-May-20	17-Jun-20
A1410	COA Next Phase NTP	0	18-Jun-20	
DCM-1.1.5	Client Submittal Review	20	18-Jun-20	15-Jul-20
A1040	Review Submittal Documen	20	18-Jun-20	15-Jul-20
DCM-1.1.6	Issue for Bid	0	15-Jul-20	15-Jul-20
A1050	Establish GMP	0		15-Jul-20
DCM-1.12	Construction	600	16-Jul-20	02-Nov-22
DCM-1.12.Ph1	Phase 1	316	16-Jul-20	30-Sep-21
DCM-1.12.Ph1.1	Demo	132	16-Jul-20	15-Jan-21
DCM-1.12.Ph1.1.1	Remediation an	20	16-Jul-20	12-Aug-20
A1(	Remediation and Abatemer	20	16-Jul-20	12-Aug-20
DCM-1.12.Ph1.1.4	Electrical	14	13-Aug-20	01-Sep-20
A1(	Demo Electrical	14	13-Aug-20	01-Sep-20
DCM-1.12.Ph1.1.3	Plumbing	15	02-Sep-20	22-Sep-20
A1(	Demo Plumbing	15	02-Sep-20	22-Sep-20
DCM-1.12.Ph1.1.8	HVAC	10	23-Sep-20	06-Oct-20

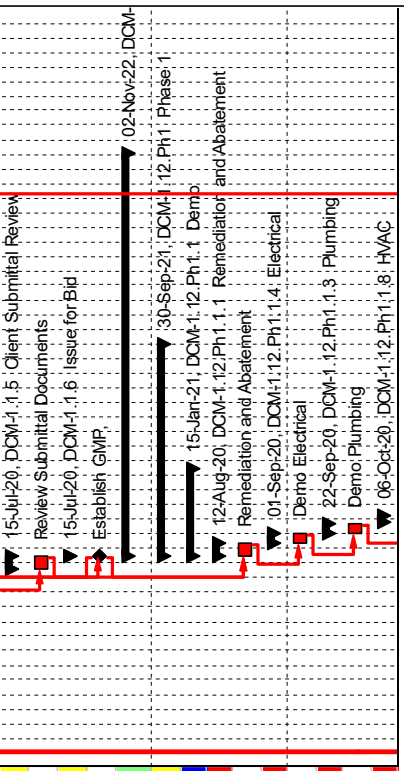

Actual Level of Effort | Remaining Work
Actual Work | Critical Remainin...

Page 1 of 4

TASK filter: All Activities

© Oracle Corporation

Sunland Group

Classic Schedule Layout

Activity ID	Activity Name	Original Duration	Start	Finish
A17	Demo HVAC	10	23-Sep-20	06-Oct-20
DCM-1.12.Ph1.1.12	**Fire Sprinkler**	8	07-Oct-20	16-Oct-20
A17	Demo Fire Sprinkler	8	07-Oct-20	16-Oct-20
DCM-1.12.Ph1.1.11	**Fire Alarm**	6	19-Oct-20	26-Oct-20
A17	Demo Fire Alarm	6	19-Oct-20	26-Oct-20
DCM-1.12.Ph1.1.10	**Windows**	6	27-Oct-20	03-Nov-20
A17	Demo Windows	6	27-Oct-20	03-Nov-20
DCM-1.12.Ph1.1.13	**Communicatio**	6	04-Nov-20	11-Nov-20
A17	Demo Communications	6	04-Nov-20	11-Nov-20
DCM-1.12.Ph1.1.14	**Security**	6	12-Nov-20	19-Nov-20
A17	Demo Security	6	12-Nov-20	19-Nov-20
DCM-1.12.Ph1.1.7	**Ceilings**	8	20-Nov-20	01-Dec-20
A17	Demo Ceilings	8	20-Nov-20	01-Dec-20
DCM-1.12.Ph1.1.5	**Walls and Parti**	8	02-Dec-20	11-Dec-20
A17	Demo Walls and Partitions	8	02-Dec-20	11-Dec-20
DCM-1.12.Ph1.1.9	**Doors**	6	14-Dec-20	21-Dec-20
A17	Demo Doors	6	14-Dec-20	21-Dec-20
DCM-1.12.Ph1.1.6	**Floors**	9	22-Dec-20	01-Jan-21
A17	Demo Floors	9	22-Dec-20	01-Jan-21
DCM-1.12.Ph1.1.2	**Foundation**	10	04-Jan-21	15-Jan-21
A18	Demo Foundation	10	04-Jan-21	15-Jan-21
DCM-1.12.Ph1.2	**Construction/Installa**	184	18-Jan-21	30-Sep-21
DCM-1.12.Ph1.2.2	**Foundation**	14	18-Jan-21	04-Feb-21
A18	Install Foundation	14	18-Jan-21	04-Feb-21
DCM-1.12.Ph1.2.3	**Plumbing**	15	05-Feb-21	25-Feb-21
A18	Install Plumbing	15	05-Feb-21	25-Feb-21
DCM-1.12.Ph1.2.5	**Walls and Parti**	10	26-Feb-21	11-Mar-21
A18	Install Walls and Partitions	10	26-Feb-21	11-Mar-21
DCM-1.12.Ph1.2.10	**Windows**	10	12-Mar-21	25-Mar-21
A14	Install Windows	10	12-Mar-21	25-Mar-21
DCM-1.12.Ph1.2.7	**Ceilings**	12	26-Mar-21	12-Apr-21
A14	Install Ceilings	12	26-Mar-21	12-Apr-21
DCM-1.12.Ph1.2.4	**Electrical**	14	13-Apr-21	30-Apr-21
A18	Install Electrical	14	13-Apr-21	30-Apr-21
DCM-1.12.Ph1.2.6	**Floors**	10	03-May-21	14-May-21
A18	Install Floors	10	03-May-21	14-May-21
DCM-1.12.Ph1.2.8	**HVAC**	15	17-May-21	04-Jun-21

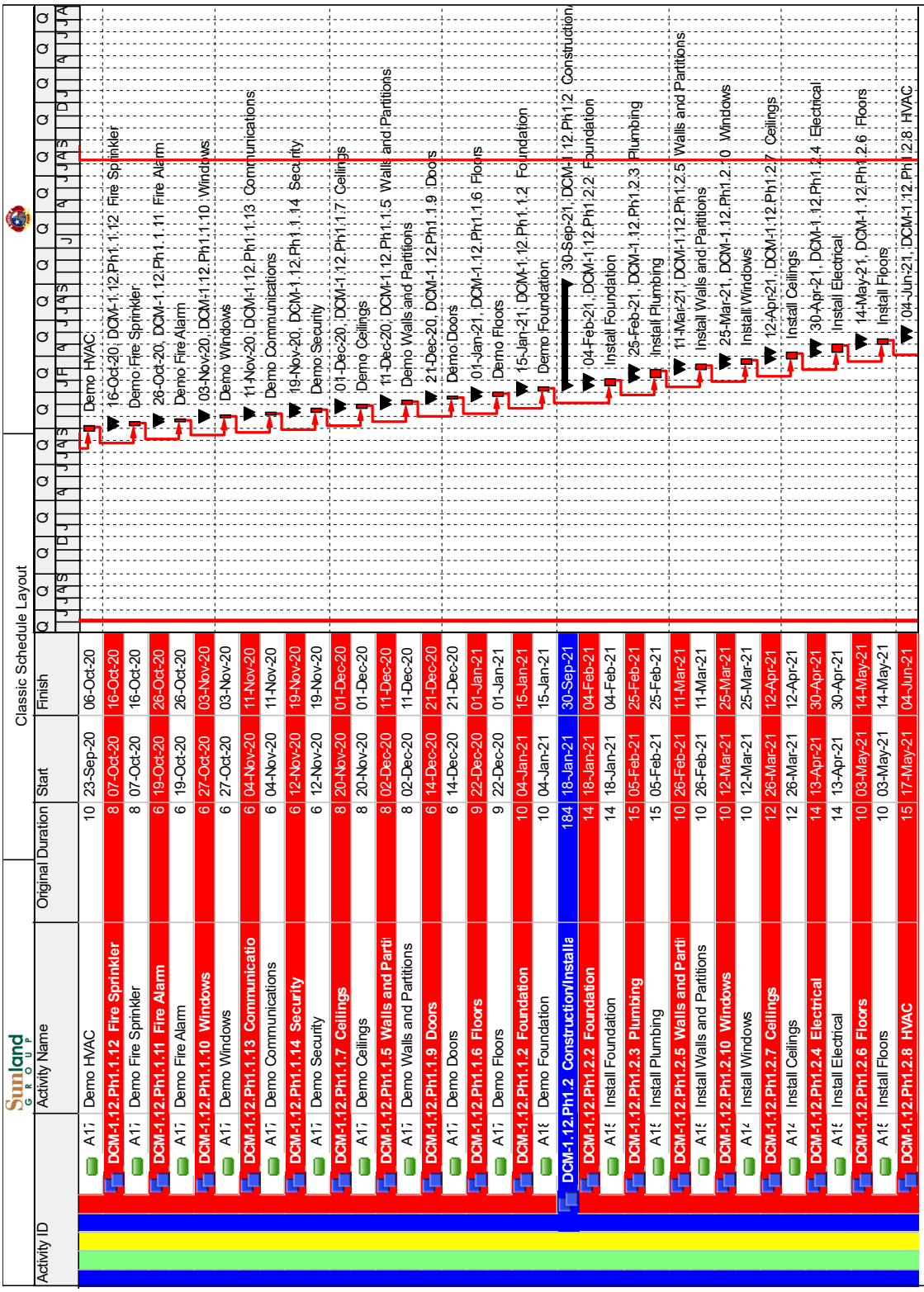

Actual Level of Effort
Remaining Work
Actual Work
Critical Remainin...

Page 2 of 4

TASK filter: All Activities

© Oracle Corporation

Sunland GROUP

Classic Schedule Layout

Activity ID	Activity Name	Original Duration	Start	Finish
A1040	Install HVAC	15	17-May-21	04-Jun-21
DCM-1.12.Ph1.2.9	Doors	14	07-Jun-21	24-Jun-21
A1040	Install Doors	14	07-Jun-21	24-Jun-21
DCM-1.12.Ph1.2.11	Fire Alarm	10	25-Jun-21	08-Jul-21
A1040	Install Fire Alarm	10	25-Jun-21	08-Jul-21
DCM-1.12.Ph1.2.12	Fire Sprinkler	10	09-Jul-21	22-Jul-21
A1040	Install Fire Sprinkler	10	09-Jul-21	22-Jul-21
DCM-1.12.Ph1.2.13	Communicatio	10	23-Jul-21	05-Aug-21
A1040	Install Communications	10	23-Jul-21	05-Aug-21
DCM-1.12.Ph1.2.14	Security	10	06-Aug-21	19-Aug-21
A1040	Install Security	10	06-Aug-21	19-Aug-21
DCM-1.12.Ph1.2.1	Punchlist Items	30	20-Aug-21	30-Sep-21
A1040	Punchlist Items	30	20-Aug-21	30-Sep-21
DCM-1.12.Ph2	Phase 2	284	01-Oct-21	02-Nov-22
DCM-1.12.Ph2.1	Demo	132	01-Oct-21	04-Apr-22
DCM-1.12.Ph2.1.15	Remediation a	20	01-Oct-21	28-Oct-21
A1040	Remediation and Abatemer	20	01-Oct-21	28-Oct-21
DCM-1.12.Ph2.1.4	Electrical	14	29-Oct-21	17-Nov-21
A1040	Demo Electrical	14	29-Oct-21	17-Nov-21
DCM-1.12.Ph2.1.3	Plumbing	15	18-Nov-21	08-Dec-21
A1040	Demo Plumbing	15	18-Nov-21	08-Dec-21
DCM-1.12.Ph2.1.8	HVAC	10	09-Dec-21	22-Dec-21
A1040	Demo HVAC	10	09-Dec-21	22-Dec-21
DCM-1.12.Ph2.1.12	Fire Sprinkler	8	23-Dec-21	03-Jan-22
A1040	Demo Fire Sprinkler	8	23-Dec-21	03-Jan-22
DCM-1.12.Ph2.1.11	Fire Alarm	6	04-Jan-22	11-Jan-22
A1040	Demo Fire Alarm	6	04-Jan-22	11-Jan-22
DCM-1.12.Ph2.1.10	Windows	6	12-Jan-22	19-Jan-22
A1040	Demo Windows	6	12-Jan-22	19-Jan-22
DCM-1.12.Ph2.1.13	Communicatio	6	20-Jan-22	27-Jan-22
A1040	Demo Communications	6	20-Jan-22	27-Jan-22
DCM-1.12.Ph2.1.14	Security	6	28-Jan-22	04-Feb-22
A1040	Demo Security	6	28-Jan-22	04-Feb-22
DCM-1.12.Ph2.1.7	Ceilings	8	07-Feb-22	16-Feb-22
A1040	Demo Ceilings	8	07-Feb-22	16-Feb-22
DCM-1.12.Ph2.1.5	Walls and Partiti	8	17-Feb-22	28-Feb-22
A1040	Demo Walls and Partitions	8	17-Feb-22	28-Feb-22

Actual Level of Effort | Remaining Work
Actual Work | Critical Remainin...

Page 3 of 4

TASK filter: All Activities

© Oracle Corporation

Sunland Group

Classic Schedule Layout

Activity ID	Activity Name	Original Duration	Start	Finish
DCM-1.12.Ph2.1.9 Doors		6	01-Mar-22	08-Mar-22
A1f	Demo Doors	6	01-Mar-22	08-Mar-22
DCM-1.12.Ph2.1.6 Floors		9	09-Mar-22	21-Mar-22
A1f	Demo Floors	9	09-Mar-22	21-Mar-22
DCM-1.12.Ph2.1.2 Foundation		10	22-Mar-22	04-Apr-22
A1f	Demo Foundation	10	22-Mar-22	04-Apr-22
DCM-1.12.Ph2.2 Construction/Installa		162	22-Mar-22	02-Nov-22
DCM-1.12.Ph2.2.2 Foundation		14	22-Mar-22	08-Apr-22
A1f	Install Foundation	14	22-Mar-22	08-Apr-22
DCM-1.12.Ph2.2.3 Plumbing		14	11-Apr-22	28-Apr-22
A1f	Install Plumbing	14	11-Apr-22	28-Apr-22
DCM-1.12.Ph2.2.5 Walls and Partiti		10	29-Apr-22	12-May-22
A1f	Install Walls and Partitions	10	29-Apr-22	12-May-22
DCM-1.12.Ph2.2.10 Windows		8	13-May-22	24-May-22
A1f	Install Windows	8	13-May-22	24-May-22
DCM-1.12.Ph2.2.7 Ceilings		10	25-May-22	07-Jun-22
A1f	Install Ceilings	10	25-May-22	07-Jun-22
DCM-1.12.Ph2.2.4 Electrical		12	08-Jun-22	23-Jun-22
A1f	Install Electrical	12	08-Jun-22	23-Jun-22
DCM-1.12.Ph2.2.6 Floors		10	24-Jun-22	07-Jul-22
A1f	Install Floors	10	24-Jun-22	07-Jul-22
DCM-1.12.Ph2.2.8 HVAC		14	08-Jul-22	27-Jul-22
A1f	Install HVAC	14	08-Jul-22	27-Jul-22
DCM-1.12.Ph2.2.9 Doors		8	28-Jul-22	08-Aug-22
A1f	Install Doors	8	28-Jul-22	08-Aug-22
DCM-1.12.Ph2.2.11 Fire Alarm		8	09-Aug-22	18-Aug-22
A1f	Install Fire Alarm	8	09-Aug-22	18-Aug-22
DCM-1.12.Ph2.2.12 Fire Sprinkler		8	19-Aug-22	30-Aug-22
A1f	Install Fire Sprinkler	8	19-Aug-22	30-Aug-22
DCM-1.12.Ph2.2.13 Communicatio		8	31-Aug-22	09-Sep-22
A1f	Install Communications	8	31-Aug-22	09-Sep-22
DCM-1.12.Ph2.2.14 Security		8	12-Sep-22	21-Sep-22
A1f	Install Security	8	12-Sep-22	21-Sep-22
DCM-1.12.Ph2.2.1 Punchlist Items		30	22-Sep-22	02-Nov-22
A1f	Punchlist Items	30	22-Sep-22	02-Nov-22

Actual Level of Effort
Remaining Work
Actual Work
Critical Remaining...

Page 4 of 4

TASK filter: All Activities

© Oracle Corporation

A. Feasibility Test Fit Dwgs. for Proposed Conceptual Project w/ Keynotes

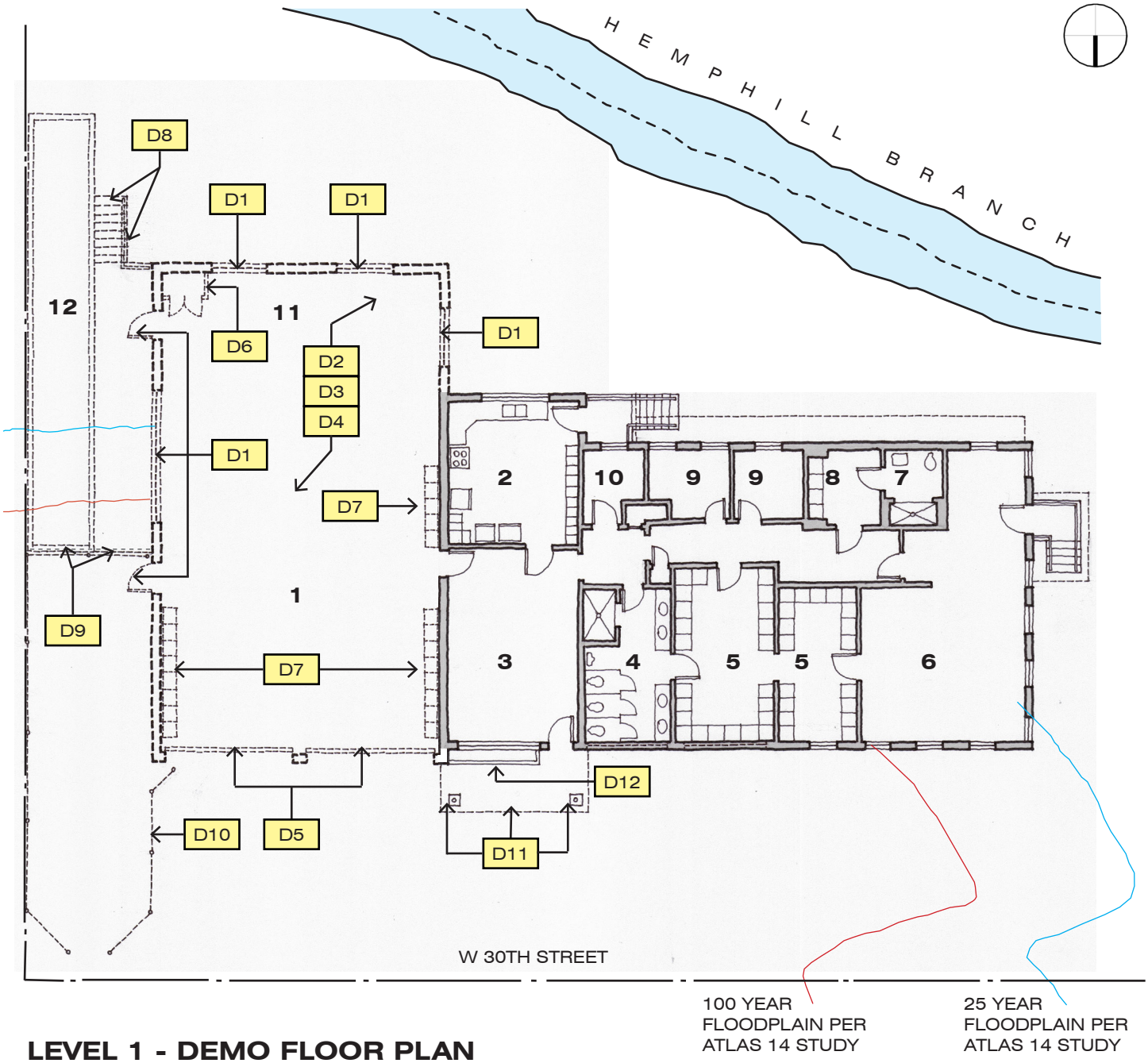

LEVEL 1 - DEMO FLOOR PLAN

1 APPARATUS BAY
2 KITCHEN/DINING
3 DAY ROOM
4 MEN'S BATHROOM
5 MEN'S LOCKER ROOM
6 SLEEPING QUARTERS
7 WOMEN'S BATHROOM
8 WOMEN'S LOCKER ROOM
9 OFFICER'S QUARTERS
10 MECHANICAL
11 WORKOUT AREA
12 HOSE DRYING RACK

General Notes (not shown on drawings):

G1 Clean exterior masonry and repair as required.
G2 Deliver all removed building elements such as windows and doors to appropriate local recycling centers or per LEED guidelines.
G3 All new Furniture, Furnishings and Equipment (FFE) are N.I.C., U.N.O.
G4 All new telecommunication equipment and cabling related to telephone, data, alarms and paging systems in new Apparatus Bay Addition is N.I.C.
G5 Per AFD-provided "Fire & EMS Station Design Prototype Programming" document dated 6/1/2016: "All materials in Apparatus Room and adjacent Turnout Gear Storage, Decon Room, Workout Room and Bathroom [if constructed] should be moisture resistant, including doors and hardware, so it can be hosed down for cleaning. In these areas, sealed masonry [such as glazed brick and/or ceramic tiled surfaces] is preferred for [interior] wall [finish] construction. There shall be no suspended or gypsum ceiling in the Apparatus Room. [Adjacent rooms (listed above) shall have suspended acoustical lay-in ceilings]. If there is an exposed [steel] deck [at roof], it shall be painted.
G6 For MEP scope, refer to Mechanical, Plumbing & Electrical Requirements & Guidelines in "Fire & EMS Statin Design Prototype Programming" document dated 6/1/2016 and "Mechanical, Electrical and Plumbing Standards" under "Chapter 8 Technical Criteria & Standards" in 50%DCM. (Note: The MEP Standards in Chapter 8 will be revised during the 100% DCM Phase after the City of Austin submits their content for this Chapter.)

Demolition Key Notes:

D1 Remove window and/or door for recycling (per Key Note G2).
D2 At 2-bay apparatus room, demolish all exterior masonry walls, roof structure, concrete slab and concrete pier and beam foundation except east wall of Living Quarters Wing (LQW) which shall remain, but only to height of LQW roof. Shore foundation under east wall as required and protect all exposed faces of east wall, including top of wall, immediately after demolition of existing Apparatus Room. Remove white ceramic tile wainscot from east face of wall to remain.
D3 Demolish all mechanical systems and ductwork serving existing apparatus bay.
D4 Demolish all plumbing, gas and electrical in existing apparatus room; cap piping in crawl space under LQW.
D5 Demolish large segmented overhead truck bay door including associated track system.
D6 Demolish storage cabinet.
D7 Demolish turnout lockers.
D8 Demolish concrete stair and metal pipe railing.
D9 Demolish concrete hose drying rack and adjacent concrete slab.
D10 Demolish chain link fencing.
D11 Demolish entrance canopy and supports.
D12 Demolish brick planter.

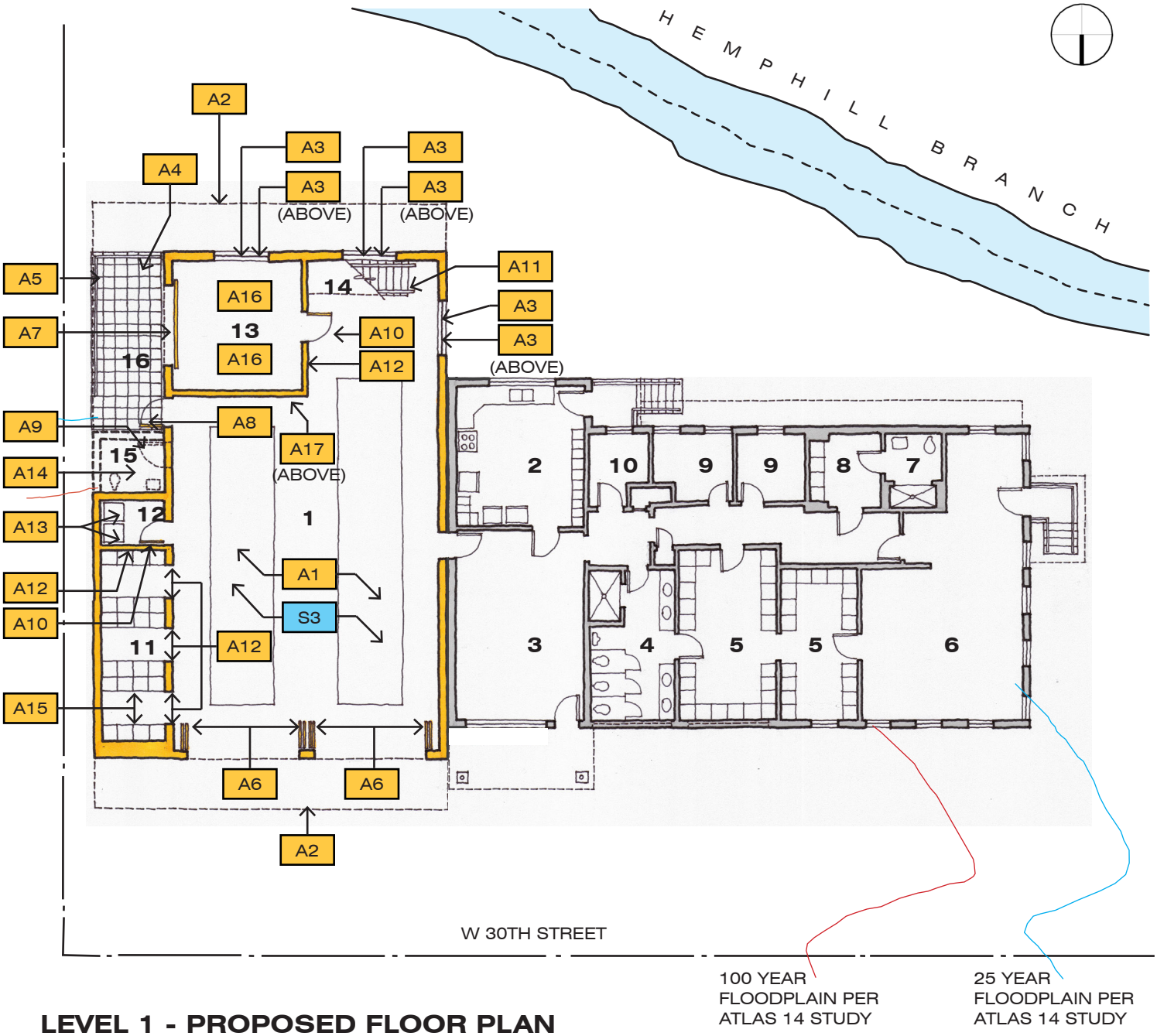

LEVEL 1 - PROPOSED FLOOR PLAN

1 APPARATUS BAY
2 KITCHEN/DINING
3 DAY ROOM
4 MEN'S BATHROOM
5 MEN'S LOCKER ROOM
6 SLEEPING QUARTERS
7 WOMEN'S BATHROOM
8 WOMEN'S LOCKER ROOM
9 OFFICER'S QUARTERS
10 MECHANICAL
11 TURNOUT GEAR
12 DECON. ROOM
13 WORKOUT ROOM
14 MEZZANINE STORAGE (ABOVE WORKOUT ROOM GEAR)
15 POSSIBLE BATHROOM
16 PATIO

Architectural Key Notes:

A1 New addition shall be Type IIB Construction to include a 2-bay Apparatus Room with ancillary Turnout Gear Storage, Decon Room, Workout Room and optional Bathroom, if allowed to be constructed after floodplain study is completed. Exterior cladding shall be either brick or metal panels. Refer to Key Note G5 for interior finishes. For floor, see Key Note S1. Lowest point of Apparatus Room ceiling or roof structure shall be 20 feet above floor level.

A2 New roof overhang to keep rain away from open bay doors, shade patio area and south-facing facade.

A3 New operable insulated glass window to meet current codes with insect screens and locks. Each window opening is approx. 6'-0"W x 6'-0" H. Window shall be a divided lite with 2 over 2 configuration; each half is a 4'-0"H fixed lite above and 2'-0"H awning below.

A4 New paved patio area with formed concrete retaining wall.

A5 New galvanized high-performance coated steel pipe railing at two edges of patio.

A6 New industrial grade electrically operated high-speed bi-fold truck bay doors at new openings 14 feet high by 14 feet wide.

A7 New 10'-0" wide by 8'-0" high glazed aluminum sectional overhead garage door with translucent insulated panels.

A8 New exterior painted HM door with no vision window, painted HM frame.

A9 (OPTIONAL - if allowed to be constructed after floodplain study is completed.) New interior painted HM door with no vision window, painted HM frame.

A10 New interior painted HM door with vision window, painted HM frame.

A11 New galvanized steel stair with high-performance paint with steel grating treads and steel channel stringers for access to Mezzanine Storage above Workout Room.

A12 New steel stud partition shall extend to 12'-0" AFF with steel stud ceiling framing topped with plywood roof capable of supporting ___ lbs. live load and ___ lbs. dead load over Workout Room and Turnout Gear Storage/Decon Room.

A13 New commercial-grade washer and dryer.

A14 (OPTIONAL - if allowed to be constructed after floodplain study is completed.) New TAS-compliant toilet room with fixtures (per Chapter 8 Plumbing Standards) and accessories; full-height ceramic tile walls and ceramic tile floor.

A15 New Turnout Gear Lockers with solid wood shelving and heavy-duty hooks.

A16 New ceiling fan with speed control switch.

A17 New galvanized steel guardrail at edge of mezzanine open to below.

Structural Key Notes:

S1 New concrete floor throughout entire addition shall be formed reinforced concrete slab with crawl space below, supported on new concrete pier and beam structure. Refer to Section H.2. "Structural Narrative" in Chapter 7 "Proposed Conceptual Projects"

B. Cost Estimate of Proposed Conceptual Project

SUMMARY REPORT

CITY OF AUSTIN FIRE STATION NO.03 3/2/2019

--SUMMARY REPORT--

SUMMARY OF COA - FIRE STATION NO.03
CITY OF AUSTIN FIRE STATION NO.03
5309 E RIVERSIDE DRIVE

LAWRENCE GROUP
JOB No.: COA FS03

		TOTAL BDSF	COST PER/ BDSF	TOTAL COST	
COA - FIRE STATION NO.03		**2918**	**$406.19**	**$1,185,254**	
DIVISION		**LABOR**	**MATL/EQUIP**	**UNIT PRICE**	**TOTAL**
01-GENERAL REQUIREMENTS		$65,000	$65,000	$44.55	$130,000
02-EXISTING CONDITIONS		$4,852	$9,350	$4.87	$14,202
03-CONCRETE		$92,914	$107,344	$68.63	$200,258
04-MASONRY		$61,419	$60,611	$41.82	$122,030
05-METALS		$26,405	$39,636	$22.63	$66,042
06-WOOD & PLASTIC & COMPOSITES		$2,918	$2,918	$2.00	$5,836
07-THERMAL & WATERPROOFING		$14,931	$15,856	$10.55	$30,787
08-OPENINGS		$13,438	$35,042	$16.61	$48,480
09-FINISHES		$15,262	$9,889	$8.62	$25,151
10-SPECIALTIES		$631	$519	$0.39	$1,149
21-FIRE SUPPERSSION		$5,290	$5,290	$3.63	$10,580
22-PLUMBING		$2,200	$2,029	$1.45	$4,229
23-HVAC		$30,671	$30,764	$21.05	$61,435
26-ELECTRICAL		$23,664	$37,854	$21.08	$61,518
27-COMMUNICATIONS		$5,290	$5,290	$3.63	$10,580
28-ELECTRONIC SAFETY & SECURITY		$5,290	$5,290	$3.63	$10,580
32-EXTERIOR IMPROVEMENTS		$1,950	$1,950	$1.34	$3,900
DIRECT COST 5		**$372,123**	**$434,633**	**$276.48**	**$806,756**
GC OH & GEN CONDITIONS	20.00%				$161,351
GC FEE	5.00%				$48,405
CONSTRUCTION CONTINGENCY	10.00%				$101,651
ESCALATION (2 YEARS AT 3% PER YEAR)	6.00%				$67,090
TOTAL OF COA - FIRE STATION NO.03				**$406.19**	**$1,185,254**

DETAIL REPORT

CITY OF AUSTIN FIRE STATION NO.03

LAWRENCE GROUP
900 EAST 6TH STREET SUITE 105
AUSTIN, TX

PREPARED BY:
SUNLAND GROUP
SAN ANTONIO, TEXAS

--DETAIL REPORT--

PROJECT
ESTIMATE

DATE: 03/02/2019 01:55:05 PM
JOB NO.: COA FS03
PROJECT: CITY OF AUSTIN FIRE STATION NO.03
AUSTIN, TX

CODE	DESCRIPTION	QTY	UNIT LABOR	TOTAL LABOR	UNIT MATL	TOTAL MATL	UNIT PRICE	TOTAL
	COA - FIRE STATION NO.03							
	01-GENERAL REQUIREMENTS							
1020	**ALLOWANCES**							
	GENERAL REQUIREMENTS	1 ALLO	$64,999.95	$65,000	$65,000.00	$65,000	$129,999.95	$130,000
	TOTAL OF ALLOWANCES			**$65,000**		**$65,000**		**$130,000**
	TOTAL OF 01-GENERAL REQUIREMENTS			**$65,000**		**$65,000**		**$130,000**
	02-EXISTING CONDITIONS							
2060	**BUILDING DEMOLITION**							
	DEMOLITION - BUILDING	39,120 CF	$0.08	$3,130	$0.12	$4,694	$0.20	$7,824
	DEMOLITION - FOUNDATIONS	410 LF	$2.71	$1,111	$8.81	$3,610	$11.52	$4,721
	DEMOLITION - SLAB ON GRADE	2,445 SF	$0.25	$611	$0.43	$1,045	$0.68	$1,656
	TOTAL OF BUILDING DEMOLITION			**$4,852**		**$9,350**		**$14,202**
	TOTAL OF 02-EXISTING CONDITIONS			**$4,852**		**$9,350**		**$14,202**
	03-CONCRETE							
3304	**FOUNDATION SYSTEMS**							
	203.2 MM(8") SLAB ON GRADE 27,579 KPA(4000 PSI)	2,918 SF	$5.20	$15,174	$4.61	$13,445	$9.81	$28,618
	24" DRILLED PIERS	800 LF	$75.00	$60,000	$100.00	$80,000	$175.00	$140,000
	GALV. WELDED STEEL TRENCH GRATE	30 SF	$4.69	$141	$23.31	$699	$28.00	$840
	GRADE BEAMS	88 CY	$200.00	$17,600	$150.00	$13,200	$350.00	$30,800
	TOTAL OF FOUNDATION SYSTEMS			**$92,914**		**$107,344**		**$200,258**
	TOTAL OF 03-CONCRETE			**$92,914**		**$107,344**		**$200,258**
	04-MASONRY							
4220	**CONCRETE MASONRY UNIT**							
	8 X 8 X 16 CONCRETE MASONRY UNIT WALL	4,321 SF	$8.00	$34,568	$8.00	$34,568	$16.00	$69,136
	BRICK VENEER WALL	4,321 SF	$6.00	$25,926	$6.00	$25,926	$12.00	$51,852
	TOTAL OF CONCRETE MASONRY UNIT			**$60,494**		**$60,494**		**$120,988**
4990	**MASONRY RENOVATION**							
	RE-POINT & CLEAN BRICK	1,468 SF	$0.63	$925	$0.08	$117	$0.71	$1,042
	TOTAL OF MASONRY RENOVATION			**$925**		**$117**		**$1,042**
	TOTAL OF 04-MASONRY			**$61,419**		**$60,611**		**$122,030**
	05-METALS							
5120	**STRUCTURAL STEEL**							
	MED SPAN, LT LD, STL FRM, MTL JOIST	10 TON	$2,500.00	$25,000	$3,000.00	$30,000	$5,500.00	$55,000
	TOTAL OF STRUCTURAL STEEL			**$25,000**		**$30,000**		**$55,000**
5510	**METAL STAIRS**							
	STEEL STAIR TREADS W/STRINGERS PAN TYPE	10 VLF	$140.52	$1,405	$963.63	$9,636	$1,104.15	$11,042
	TOTAL OF METAL STAIRS			**$1,405**		**$9,636**		**$11,042**
	TOTAL OF 05-METALS			**$26,405**		**$39,636**		**$66,042**
	06-WOOD & PLASTIC & COMPOSITES							

CITY OF AUSTIN FIRE STATION NO.03

LAWRENCE GROUP
900 EAST 6TH STREET SUITE 105
AUSTIN, TX

--DETAIL REPORT--

PROJECT
ESTIMATE

DATE: 03/02/2019 01:55:05 PM
JOB NO.: COA FS03
PROJECT: CITY OF AUSTIN FIRE STATION NO.03
AUSTIN, TX

PREPARED BY:
SUNLAND GROUP
SAN ANTONIO, TEXAS

CODE	DESCRIPTION	QTY	UNIT LABOR	TOTAL LABOR	UNIT MATL	TOTAL MATL	UNIT PRICE	TOTAL
6111	**LIGHT WOODEN STRUCTURES FRAME**							
	MISC. BLOCKING	2,918 BDSF	$1.00	$2,918	$1.00	$2,918	$2.00	$5,836
	TOTAL OF LIGHT WOODEN STRUCTURES FRAME			**$2,918**		**$2,918**		**$5,836**
	TOTAL OF 06-WOOD & PLASTIC & COMPOSITES			**$2,918**		**$2,918**		**$5,836**
	07-THERMAL & WATERPROOFING							
7250	**FIREPROOFING**							
	MISC. FIREPROOFING	2,918 BDSF	$0.75	$2,189	$0.75	$2,189	$1.50	$4,377
	TOTAL OF FIREPROOFING			**$2,189**		**$2,189**		**$4,377**
7413	**PREFORMED METAL ROOFING**							
	4 PLY BUILT-UP ROOFING WITH FIBERGLASS AND GRAVEL	2,645 SF	$3.75	$9,919	$3.75	$9,919	$7.50	$19,838
	RIGID INSULATION 1-1/2" THICK	2,645 SF	$0.24	$635	$0.59	$1,561	$0.83	$2,195
	TOTAL OF PREFORMED METAL ROOFING			**$10,554**		**$11,479**		**$22,033**
7900	**JOINT SEALANTS**							
	MISC. CAULKING	2,918 BDSF	$0.75	$2,189	$0.75	$2,189	$1.50	$4,377
	TOTAL OF JOINT SEALANTS			**$2,189**		**$2,189**		**$4,377**
	TOTAL OF 07-THERMAL & WATERPROOFING			**$14,931**		**$15,856**		**$30,787**
	08-OPENINGS							
8251	**HOL MTL DOORS-FRAMES & HDWR**							
	3-0X7-0 INT HOL MTL DOOR & FRAME W/HARDWARE - UL LABELED	3 EA	$500.00	$1,500	$1,750.00	$5,250	$2,250.00	$6,750
	TOTAL OF HOL MTL DOORS-FRAMES & HDWR			**$1,500**		**$5,250**		**$6,750**
8360	**OVERHEAD DOORS**							
	20-0X14-0 OVERHEAD ROLL-UP DOOR ELECTRIC	3 EA	$3,206.61	$9,620	$7,366.90	$22,101	$10,573.51	$31,721
	TOTAL OF OVERHEAD DOORS			**$9,620**		**$22,101**		**$31,721**
8520	**ALUMINUM WINDOWS**							
	ALUMINUM FRM FIXED TYPE WINDOW - 6.35 MM(1/4") CLEAR	216 SF	$10.73	$2,318	$35.61	$7,692	$46.34	$10,009
	TOTAL OF ALUMINUM WINDOWS			**$2,318**		**$7,692**		**$10,009**
	TOTAL OF 08-OPENINGS			**$13,438**		**$35,042**		**$48,480**
	09-FINISHES							
9100	**INTERIOR FINISH OUT**							
	2-0X4-0 SUSP ACOUSTIC CEILING 5/8" MINERAL TILE	575 SF	$0.47	$270	$1.01	$581	$1.48	$851
	5/8" GYPSUM BOARD/INSTALLED/TAPED & FINISHED	2,645 SF	$1.25	$3,306	$0.75	$1,984	$2.00	$5,290
	5/8" GYPSUM BOARD/INSTALLED/TAPED & FINISHED	4,849 SF	$1.00	$4,849	$0.50	$2,425	$1.50	$7,274
	ACOUSTICAL WALL PANELS	220 SF	$3.03	$668	$7.14	$1,573	$10.17	$2,241
	CONCRETE FLOOR SEALER	2,645 SF	$0.08	$212	$0.11	$291	$0.19	$503
	LIGHT WEIGHT VINYL WALLCOVERING WITH FABRIC BACKING	24 SF	$0.64	$15	$0.88	$21	$1.52	$36
	MTL STUD PARTITION, 3-5/8"	895 SF	$1.00	$895	$0.50	$448	$1.50	$1,343

CITY OF AUSTIN FIRE STATION NO.03

LAWRENCE GROUP
900 EAST 6TH STREET SUITE 105
AUSTIN, TX

--DETAIL REPORT--

PROJECT
ESTIMATE

DATE: 03/02/2019 01:55:05 PM
JOB NO.: COA FS03
PROJECT: CITY OF AUSTIN FIRE STATION NO.03
AUSTIN, TX

PREPARED BY:
SUNLAND GROUP
SAN ANTONIO, TEXAS

CODE	DESCRIPTION	QTY	UNIT LABOR	TOTAL LABOR	UNIT MATL	TOTAL MATL	UNIT PRICE	TOTAL
	PAINT TO GYPSUM BOARD WALLS USING ROLLER	4,849 SF	$0.62	$3,006	$0.18	$873	$0.80	$3,879
	POLYSTYRENE RIGID WALL INSULATION, 25.4 MM(1") THICK	3,459 SF	$0.59	$2,041	$0.49	$1,695	$1.08	$3,736
	TOTAL OF INTERIOR FINISH OUT			**$15,262**		**$9,889**		**$25,151**
	TOTAL OF 09-FINISHES			**$15,262**		**$9,889**		**$25,151**
	10-SPECIALTIES							
10160	**TOILET PARTITIONS & SCREENS**							
	FIRE EXTINGUISHER CABINET, 8" X 12" X 27"	1 EA	$127.15	$127	$184.17	$184	$311.32	$311
	TURNOUT LOCKERS	50 LF	$10.07	$504	$6.69	$335	$16.76	$838
	TOTAL OF TOILET PARTITIONS & SCREENS			**$631**		**$519**		**$1,149**
	TOTAL OF 10-SPECIALTIES			**$631**		**$519**		**$1,149**
	21-FIRE SUPPERSSION							
21501	**SPRINKLER SYSTEMS**							
	FIRE SPRINKLER SYSTEM	2,645 BDSF	$2.00	$5,290	$2.00	$5,290	$4.00	$10,580
	TOTAL OF SPRINKLER SYSTEMS			**$5,290**		**$5,290**		**$10,580**
	TOTAL OF 21-FIRE SUPPERSSION			**$5,290**		**$5,290**		**$10,580**
	22-PLUMBING							
22027	**PLUMBING SYSTEMS**							
	COPPER PIPE & FITTINGS (1/2" TO 4" DIA. PIPING)	2 EA	$891.19	$1,782	$899.53	$1,799	$1,790.72	$3,581
	RESIDENTIAL WATER HEATER & HOSE BIBB PIPING	2 EA	$208.65	$417	$114.92	$230	$323.57	$647
	TOTAL OF PLUMBING SYSTEMS			**$2,200**		**$2,029**		**$4,229**
	TOTAL OF 22-PLUMBING			**$2,200**		**$2,029**		**$4,229**
	23-HVAC							
23650	**HVAC SYSTEM**							
	COMPRESSED AIR SYSTEM FOR A MAINT. SHOP	1 EA	$11,798.58	$11,799	$13,776.44	$13,776	$25,575.02	$25,575
	DUCTWORK	2,645 SF	$2.25	$5,951	$2.25	$5,951	$4.50	$11,903
	GARAGE VEHICLE EXHAUST SYSTEM (3500 CFM)	7,000 CFM	$1.40	$9,800	$0.87	$6,090	$2.27	$15,890
	HVAC CONTROLS	2,645 SF	$1.18	$3,121	$1.87	$4,946	$3.05	$8,067
	TOTAL OF HVAC SYSTEM			**$30,671**		**$30,764**		**$61,435**
	TOTAL OF 23-HVAC			**$30,671**		**$30,764**		**$61,435**
	26-ELECTRICAL							
26001	**ELECTRICAL SYSTEM**							
	BUILDING GROUNDING	2 EA	$394.87	$790	$311.02	$622	$705.89	$1,412
	ELECTRICAL PANELS	2 EA	$1,565.33	$3,131	$3,455.25	$6,911	$5,020.58	$10,041
	LIGHT FIXTURES	50 EA	$112.50	$5,625	$487.50	$24,375	$600.00	$30,000
	LIGHTING PROTECTION SYSTEM	4 EA	$267.11	$1,068	$181.21	$725	$448.32	$1,793
	WIRING DEVICES, CONDUIT, WIRE, BOXES AND COVERS	30 EA	$435.00	$13,050	$174.05	$5,222	$609.05	$18,272
	TOTAL OF ELECTRICAL SYSTEM			**$23,664**		**$37,854**		**$61,518**
	TOTAL OF 26-ELECTRICAL			**$23,664**		**$37,854**		**$61,518**

CITY OF AUSTIN FIRE STATION NO.03

LAWRENCE GROUP
900 EAST 6TH STREET SUITE 105
AUSTIN, TX

--DETAIL REPORT--

PROJECT
ESTIMATE

DATE: 03/02/2019 01:55:05 PM
JOB NO.: COA FS03
PROJECT: CITY OF AUSTIN FIRE STATION NO.03
AUSTIN, TX

PREPARED BY:
SUNLAND GROUP
SAN ANTONIO, TEXAS

CODE	DESCRIPTION	QTY	UNIT LABOR	TOTAL LABOR	UNIT MATL	TOTAL MATL	UNIT PRICE	TOTAL
	27-COMMUNICATIONS							
27005	**COMMUNICATIONS SYSTEMS**							
	A/V SYSTEM INFRASTRUCTURE	2,645 BDSF	$1.00	$2,645	$1.00	$2,645	$2.00	$5,290
	SECURITY SYSTEM INFRASTRUCTURE	2,645 BDSF	$1.00	$2,645	$1.00	$2,645	$2.00	$5,290
	TOTAL OF COMMUNICATIONS SYSTEMS			**$5,290**		**$5,290**		**$10,580**
	TOTAL OF 27-COMMUNICATIONS			**$5,290**		**$5,290**		**$10,580**
	28-ELECTRONIC SAFETY & SECURITY							
28721	**FIRE ALARM SYSTEMS**							
	FIRE ALARM SYSTEM	2,645 BDSF	$2.00	$5,290	$2.00	$5,290	$4.00	$10,580
	TOTAL OF FIRE ALARM SYSTEMS			**$5,290**		**$5,290**		**$10,580**
	TOTAL OF 28-ELECTRONIC SAFETY & SECURITY			**$5,290**		**$5,290**		**$10,580**
	32-EXTERIOR IMPROVEMENTS							
32514	**BRICK PAVING**							
	BRICK PAVERS ON SAND BED	325 SF	$6.00	$1,950	$6.00	$1,950	$12.00	$3,900
	TOTAL OF BRICK PAVING			**$1,950**		**$1,950**		**$3,900**
	TOTAL OF 32-EXTERIOR IMPROVEMENTS			**$1,950**		**$1,950**		**$3,900**
	TOTAL DIRECT COST			**$372,123**		**$434,633**		**$806,756**
	GC OH & GEN CONDITIONS	20.00%		$74,425		$86,927		$161,351
	GC FEE	5.00%		$22,327		$26,078		$48,405
	CONSTRUCTION CONTINGENCY	10.00%		$46,888		$54,764		$101,651
	ESCALATION (2 YEARS AT 3% PER YEAR)	6.00%		$30,946		$36,144		$67,090
	TOTAL OF COA - FIRE STATION NO.03			**$546,709**		**$638,545**		**$1,185,254**

C. Summary Schedule of Design and Construction Phasing

Sunland GROUP — Classic Schedule Layout

Activity ID	Activity Name	Original Duration	Start	Finish
DCM-2	COA Fire Station Renov	567	03-Jun-19	03-Aug-21
DCM-2.2	Milestones	295	17-Jun-20	03-Aug-21
A1000	Substantial Completion	0		03-Aug-21
A1190	Start Demo/Construction	0	17-Jun-20	
DCM-2.1	Design	272	03-Jun-19	16-Jun-20
DCM-2.1.2	Schematic Design	84	03-Jun-19	26-Sep-19
A1010	Schematic Design	56	03-Jun-19	19-Aug-19
A1012	Owner QMD	14	20-Aug-19	06-Sep-19
A1014	AE Team Response	14	09-Sep-19	26-Sep-19
A1016	COA Next Phase NTP	0		26-Sep-19
DCM-2.1.3	Design Development	84	27-Sep-19	22-Jan-20
A1020	Design Development	56	27-Sep-19	13-Dec-19
A1380	Owner QMD	14	16-Dec-19	02-Jan-20
A1390	AE Team Response	14	03-Jan-20	22-Jan-20
A1400	COA Next Phase NTP	0		22-Jan-20
DCM-2.1.4	Construction Documents	84	23-Jan-20	19-May-20
A1030	Construction Documents	56	23-Jan-20	09-Apr-20
A1410	Owner QMD	14	10-Apr-20	29-Apr-20
A1420	AE Team Response	14	30-Apr-20	19-May-20
A1430	COA Next Phase NTP	0		19-May-20
DCM-2.1.5	Client Submittal Review	20	20-May-20	16-Jun-20
A1040	Review Submittal Documen	20	20-May-20	16-Jun-20
DCM-2.1.6	Issue for Bid	0	16-Jun-20	16-Jun-20
A1050	Establish GMP	0		16-Jun-20
DCM-2.12	Construction	295	17-Jun-20	03-Aug-21
DCM-2.12.1	Demo	118	17-Jun-20	27-Nov-20
DCM-2.12.1.1	Remeditation and Abat	20	17-Jun-20	14-Jul-20
A1440	Remediation and Abatemer	20	17-Jun-20	14-Jul-20
DCM-2.12.1.4	Electrical	14	25-Jun-20	14-Jul-20
A1160	Demo Electrical	14	25-Jun-20	14-Jul-20
DCM-2.12.1.3	Plumbing	15	15-Jul-20	04-Aug-20
A1170	Demo Plumbing	15	15-Jul-20	04-Aug-20
DCM-2.12.1.8	HVAC	10	05-Aug-20	18-Aug-20

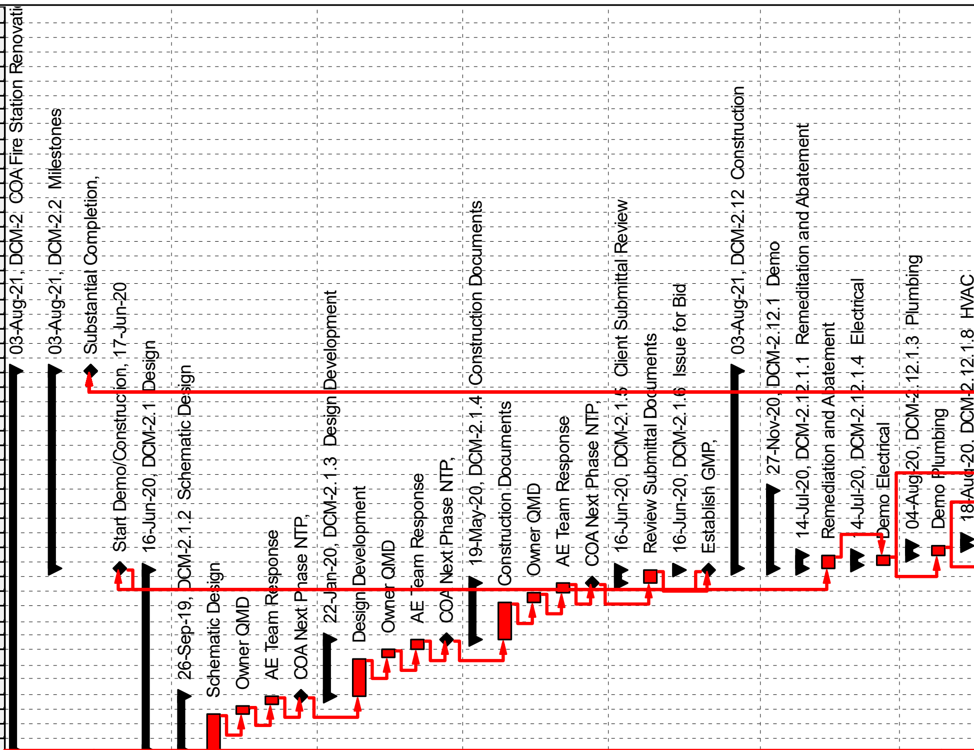

Actual Level of Effort | Remaining Work | Actual Work | Critical Remainin...

Page 1 of 3

TASK filter: All Activities

© Oracle Corporation

Sunland GROUP

Classic Schedule Layout

Activity ID	Activity Name	Original Duration	Start	Finish
A1120	Demo HVAC	10	05-Aug-20	18-Aug-20
DCM-2.12.1.12	**Fire Sprinkler**	8	19-Aug-20	28-Aug-20
A1080	Demo Fire Sprinkler	8	19-Aug-20	28-Aug-20
DCM-2.12.1.11	**Fire Alarm**	6	31-Aug-20	07-Sep-20
A1090	Demo Fire Alarm	6	31-Aug-20	07-Sep-20
DCM-2.12.1.10	**Windows**	6	08-Sep-20	15-Sep-20
A1100	Demo Windows	6	08-Sep-20	15-Sep-20
DCM-2.12.1.13	**Communications**	6	16-Sep-20	23-Sep-20
A1070	Demo Communications	6	16-Sep-20	23-Sep-20
DCM-2.12.1.14	**Security**	6	24-Sep-20	01-Oct-20
A1060	Demo Security	6	24-Sep-20	01-Oct-20
DCM-2.12.1.7	**Ceilings**	8	02-Oct-20	13-Oct-20
A1130	Demo Ceilings	8	02-Oct-20	13-Oct-20
DCM-2.12.1.5	**Walls and Partitions**	8	14-Oct-20	23-Oct-20
A1150	Demo Walls and Partitions	8	14-Oct-20	23-Oct-20
DCM-2.12.1.9	**Doors**	6	26-Oct-20	02-Nov-20
A1110	Demo Doors	6	26-Oct-20	02-Nov-20
DCM-2.12.1.6	**Floors**	9	03-Nov-20	13-Nov-20
A1140	Demo Floors	9	03-Nov-20	13-Nov-20
DCM-2.12.1.2	**Foundation**	10	16-Nov-20	27-Nov-20
A1180	Demo Foundation	10	16-Nov-20	27-Nov-20
DCM-2.12.2	**Construction/Installation**	177	30-Nov-20	03-Aug-21
DCM-2.12.2.2	**Foundation**	14	30-Nov-20	17-Dec-20
A1360	Install Foundation	14	30-Nov-20	17-Dec-20
DCM-2.12.2.3	**Plumbing**	14	18-Dec-20	06-Jan-21
A1350	Install Plumbing	14	18-Dec-20	06-Jan-21
DCM-2.12.2.5	**Walls and Partitions**	10	07-Jan-21	20-Jan-21
A1330	Install Walls and Partitions	10	07-Jan-21	20-Jan-21
DCM-2.12.2.10	**Windows**	8	21-Jan-21	01-Feb-21
A1280	Install Windows	8	21-Jan-21	01-Feb-21
DCM-2.12.2.7	**Ceilings**	12	02-Feb-21	17-Feb-21
A1310	Install Ceilings	12	02-Feb-21	17-Feb-21
DCM-2.12.2.4	**Electrical**	14	18-Feb-21	09-Mar-21
A1340	Install Electrical	14	18-Feb-21	09-Mar-21
DCM-2.12.2.6	**Floors**	10	10-Mar-21	23-Mar-21

Actual Level of Effort | Remaining Work
Actual Work | Critical Remaining...

Page 2 of 3

TASK filter: All Activities

© Oracle Corporation

Sunland GROUP

Classic Schedule Layout

Activity ID	Activity Name	Original Duration	Start	Finish
A1320	Install Floors	10	10-Mar-21	23-Mar-21
DCM-2.12.2.8	**HVAC**	15	24-Mar-21	13-Apr-21
A1300	Install HVAC	15	24-Mar-21	13-Apr-21
DCM-2.12.2.9	**Doors**	14	14-Apr-21	03-May-21
A1290	Install Doors	14	14-Apr-21	03-May-21
DCM-2.12.2.11	**Fire Alarm**	10	04-May-21	17-May-21
A1270	Install Fire Alarm	10	04-May-21	17-May-21
DCM-2.12.2.12	**Fire Sprinkler**	10	18-May-21	31-May-21
A1260	Install Fire Sprinkler	10	18-May-21	31-May-21
DCM-2.12.2.13	**Communications**	8	01-Jun-21	10-Jun-21
A1250	Install Communications	8	01-Jun-21	10-Jun-21
DCM-2.12.2.14	**Security**	8	11-Jun-21	22-Jun-21
A1240	Install Security	8	11-Jun-21	22-Jun-21
DCM-2.12.2.1	**Punchlist Items**	30	23-Jun-21	03-Aug-21
A1370	Punchlist Items	30	23-Jun-21	03-Aug-21

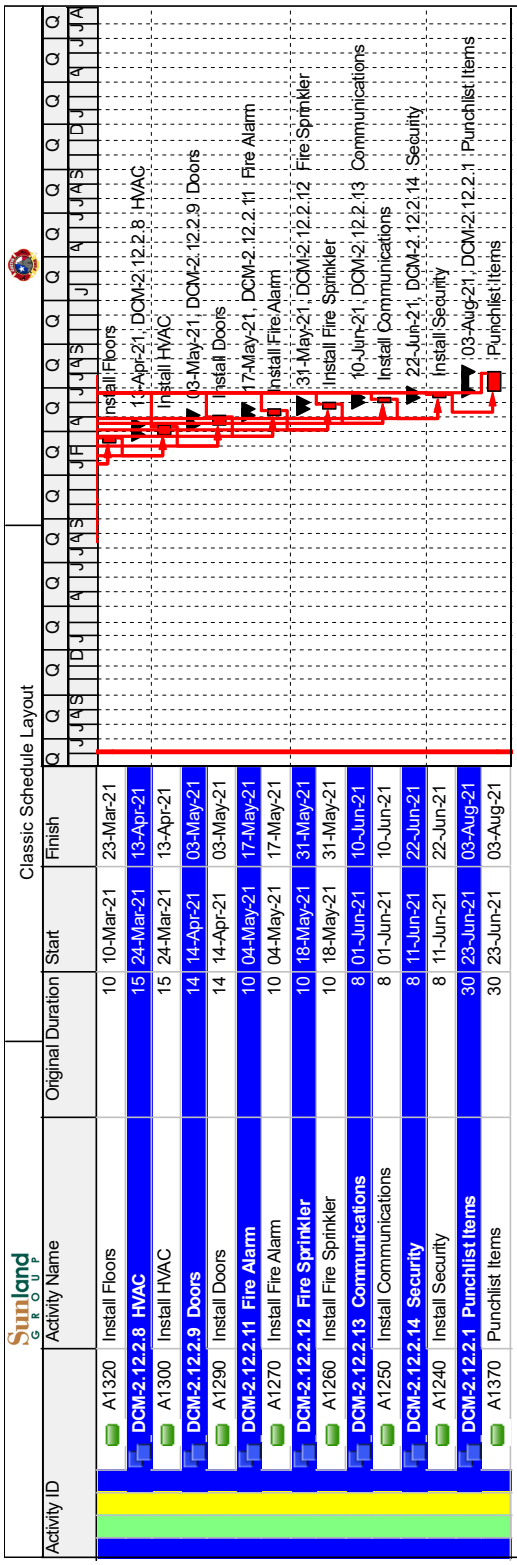

Actual Level of Effort
Actual Work
Remaining Work
Critical Remainin...

Page 3 of 3

TASK filter: All Activities

© Oracle Corporation

A. Feasibility Test Fit Dwgs. for Proposed Conceptual Project - *(Provided by AFD)*

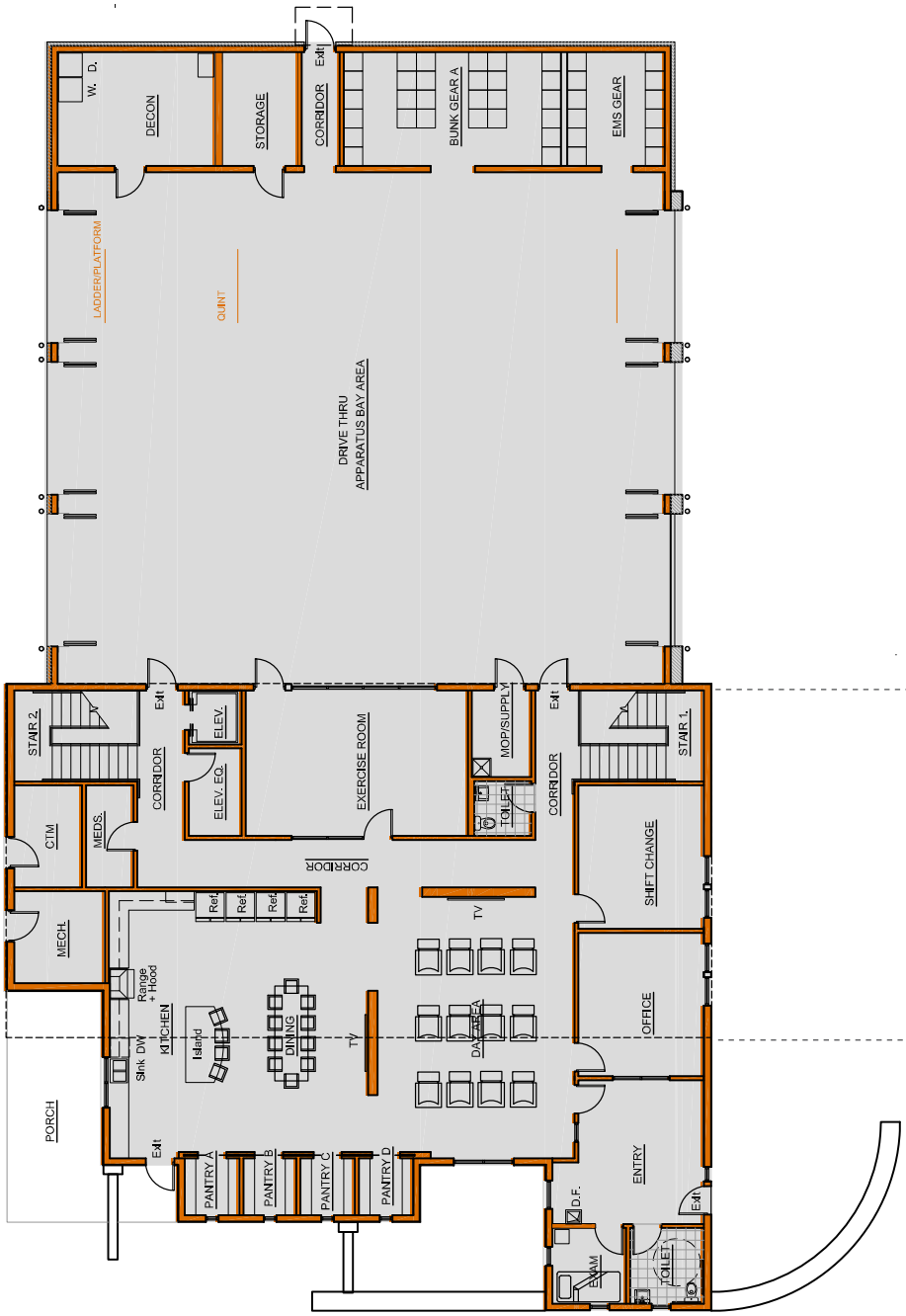

LEVEL 1 - PROPOSED FLOOR PLAN
(PROVIDE BY AFD)

NOTE: For an explanation of scope of work for this prototype station, see Appendix E.

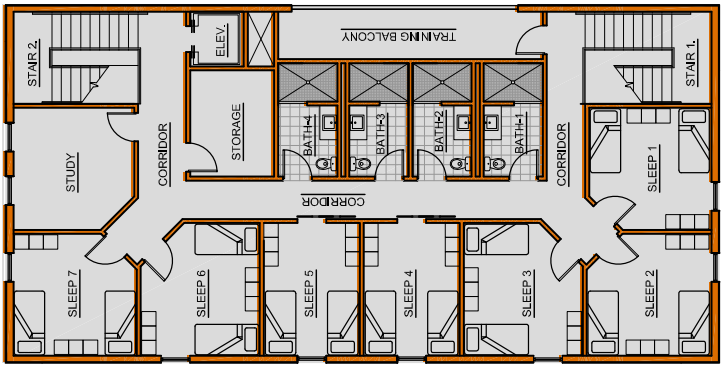

LEVEL 2 - PROPOSED FLOOR PLAN
(PROVIDE BY AFD)

NOTE: For an explanation of scope of work for this prototype station, see Appendix E.

B. Cost Estimate of Proposed Conceptual Project

SUMMARY REPORT

CITY OF AUSTIN FIRE STATION NO.22 3/2/2019

--SUMMARY REPORT--

SUMMARY OF COA - FIRE STATION NO.22
CITY OF AUSTIN FIRE STATION NO.22
5309 E RIVERSIDE DRIVE

LAWRENCE GROUP
JOB No.: COA FS22

		TOTAL BDSF	COST PER/ BDSF	TOTAL COST	
COA - FIRE STATION NO.22		**11315**	**$527.51**	**$5,968,827**	
DIVISION		**LABOR**	**MATL/EQUIP**	**UNIT PRICE**	**TOTAL**
01-GENERAL REQUIREMENTS		$100,000	$65,000	$14.58	$165,000
03-CONCRETE		$103,065	$120,634	$19.77	$223,700
04-MASONRY		$202,206	$202,206	$35.74	$404,412
05-METALS		$130,503	$191,992	$28.50	$322,494
06-WOOD & PLASTIC & COMPOSITES		$11,315	$11,315	$2.00	$22,630
07-THERMAL & WATERPROOFING		$82,083	$79,907	$14.32	$161,991
08-OPENINGS		$25,807	$98,427	$10.98	$124,234
09-FINISHES		$130,833	$114,675	$21.70	$245,508
10-SPECIALTIES		$28,419	$60,349	$7.85	$88,768
11-EQUIPMENT		$881	$373	$0.11	$1,253
13-SPEC CONSTRUCTION		$75,000	$175,000	$22.09	$250,000
14-CONVEYING SYSTEM			$130,000	$11.49	$130,000
21-FIRE SUPPERSSION		$22,630	$22,630	$4.00	$45,260
22-PLUMBING		$62,376	$63,305	$11.11	$125,681
23-HVAC		$88,623	$141,474	$20.34	$230,097
26-ELECTRICAL		$68,151	$175,467	$21.53	$243,618
27-COMMUNICATIONS		$33,945	$33,945	$6.00	$67,890
28-ELECTRONIC SAFETY & SECURITY		$22,630	$22,630	$4.00	$45,260
32-EXTERIOR IMPROVEMENTS		$111,084	$250,500	$31.96	$361,584
33-UTILITIES		$48,067	$122,725	$15.09	$170,792
DIRECT COST 5		**$1,347,618**	**$2,082,554**	**$303.15**	**$3,430,171**
GC OH & GEN CONDITIONS	20.00%				$686,034
GC FEE	14.00%				$576,269
CONSTRUCTION CONTINGENCY	20.00%				$938,495
ESCALATION (2 YEARS AT 3% PER YEAR)	6.00%				$337,858
TOTAL OF COA - FIRE STATION NO.22				**$527.51**	**$5,968,827**

DETAIL REPORT

CITY OF AUSTIN FIRE STATION NO.22

LAWRENCE GROUP
900 EAST 6TH STREET SUITE 105
AUSTIN, TX

PREPARED BY:
SUNLAND GROUP
SAN ANTONIO, TEXAS

--DETAIL REPORT--

PROJECT
ESTIMATE

DATE: 03/02/2019 08:40:35 PM
JOB NO.: COA FS22
PROJECT: CITY OF AUSTIN FIRE STATION NO.22
AUSTIN, TX

CODE	DESCRIPTION	QTY	UNIT LABOR	TOTAL LABOR	UNIT MATL	TOTAL MATL	UNIT PRICE	TOTAL
	COA - FIRE STATION NO.22							
	01-GENERAL REQUIREMENTS							
1020	**ALLOWANCES**							
	GENERAL REQUIREMENTS	1 ALLO	$65,000.00	$65,000	$65,000.00	$65,000	$130,000.00	$130,000
	LEED REQUIREMENTS	1 ALLO	$35,000.00	$35,000			$35,000.00	$35,000
	TOTAL OF ALLOWANCES			**$100,000**		**$65,000**		**$165,000**
	TOTAL OF 01-GENERAL REQUIREMENTS			**$100,000**		**$65,000**		**$165,000**
	03-CONCRETE							
3304	**FOUNDATION SYSTEMS**							
	101.6 MM(4") STANDARD SLAB ON GRADE	6,222 SF	$2.48	$15,431	$2.69	$16,738	$5.17	$32,169
	203.2 MM(8") SLAB ON GRADE 27,579 KPA(4000 PSI)	3,349 SF	$5.20	$17,417	$4.61	$15,441	$9.81	$32,858
	4" DRILLED PIERS	720 LF	$75.00	$54,000	$100.00	$72,000	$175.00	$126,000
	GALV. WELDED STEEL TRENCH GRATE	217 SF	$4.69	$1,017	$23.31	$5,056	$28.00	$6,073
	GRADE BEAMS	76 CY	$200.00	$15,200	$150.00	$11,400	$350.00	$26,600
	TOTAL OF FOUNDATION SYSTEMS			**$103,065**		**$120,634**		**$223,700**
	TOTAL OF 03-CONCRETE			**$103,065**		**$120,634**		**$223,700**
	04-MASONRY							
4220	**CONCRETE MASONRY UNIT**							
	8 X 8 X 16 CONCRETE MASONRY UNIT WALL	15,900 SF	$8.00	$127,200	$8.00	$127,200	$16.00	$254,400
	BRICK VENEER WALL	12,501 SF	$6.00	$75,006	$6.00	$75,006	$12.00	$150,012
	TOTAL OF CONCRETE MASONRY UNIT			**$202,206**		**$202,206**		**$404,412**
	TOTAL OF 04-MASONRY			**$202,206**		**$202,206**		**$404,412**
	05-METALS							
5120	**STRUCTURAL STEEL**							
	1-1/2" GALV. METAL ROOF DECK, OPEN TYPE, F.P.	9,044 SF	$0.91	$8,230	$1.91	$17,274	$2.82	$25,504
	FLOOR SLAB OF 38.1 MM(1-1/2") STEEL DECK, 101.6 MM(4") CONCRETE FILL	2,779 SF	$1.10	$3,057	$2.81	$7,809	$3.91	$10,866
	MED SPAN, LT LD, STL FRM, MTL JOIST	46 TON	$2,500.00	$115,000	$3,000.00	$138,000	$5,500.00	$253,000
	STEEL STAIR TREADS W/STRINGERS PAN TYPE	30 VLF	$140.52	$4,216	$963.63	$28,909	$1,104.15	$33,125
	TOTAL OF STRUCTURAL STEEL			**$130,503**		**$191,992**		**$322,494**
	TOTAL OF 05-METALS			**$130,503**		**$191,992**		**$322,494**
	06-WOOD & PLASTIC & COMPOSITES							
6111	**LIGHT WOODEN STRUCTURES FRAME**							
	MISC. BLOCKING	11,315 BDSF	$1.00	$11,315	$1.00	$11,315	$2.00	$22,630
	TOTAL OF LIGHT WOODEN STRUCTURES FRAME			**$11,315**		**$11,315**		**$22,630**
	TOTAL OF 06-WOOD & PLASTIC & COMPOSITES			**$11,315**		**$11,315**		**$22,630**
	07-THERMAL & WATERPROOFING							
7250	**FIREPROOFING**							

CITY OF AUSTIN FIRE STATION NO.22

LAWRENCE GROUP
900 EAST 6TH STREET SUITE 105
AUSTIN, TX

--DETAIL REPORT--

PROJECT
ESTIMATE

DATE: 03/02/2019 08:40:35 PM
JOB NO.: COA FS22
PROJECT: CITY OF AUSTIN FIRE STATION NO.22
AUSTIN, TX

PREPARED BY:
SUNLAND GROUP
SAN ANTONIO, TEXAS

CODE	DESCRIPTION	QTY	UNIT LABOR	TOTAL LABOR	UNIT MATL	TOTAL MATL	UNIT PRICE	TOTAL
	MISC. FIREPROOFING	11,315 BDSF	$1.00	$11,315	$1.00	$11,315	$2.00	$22,630
	TOTAL OF FIREPROOFING			**$11,315**		**$11,315**		**$22,630**
7413	**PREFORMED METAL ROOFING**							
	5" BOX GUTTERS WITH DOWNSPOUTS	350 LF	$5.48	$1,919	$3.38	$1,184	$8.86	$3,103
	RIGID INSULATION 1-1/2" THICK	9,044 SF	$0.24	$2,171	$0.59	$5,336	$0.83	$7,507
	STANDING SEAM METAL ROOF	9,044 SF	$5.63	$50,918	$5.63	$50,918	$11.26	$101,835
	VINYL SOFFIT AND FASCIA, VENTED	1,417 SF	$6.65	$9,425	$3.40	$4,819	$10.05	$14,243
	TOTAL OF PREFORMED METAL ROOFING			**$64,432**		**$62,256**		**$126,688**
7900	**JOINT SEALANTS**							
	MISC. CAULKING	11,315 BDSF	$0.56	$6,336	$0.56	$6,336	$1.12	$12,673
	TOTAL OF JOINT SEALANTS			**$6,336**		**$6,336**		**$12,673**
	TOTAL OF 07-THERMAL & WATERPROOFING			**$82,083**		**$79,907**		**$161,991**
	08-OPENINGS							
8247	**SC WOOD DOORS & HM FRAMES**							
	3-0X7-0 INT SOLID CORE DOOR & HOL MTL FRAME	24 EA	$250.00	$6,000	$1,250.00	$30,000	$1,500.00	$36,000
	TOTAL OF SC WOOD DOORS & HM FRAMES			**$6,000**		**$30,000**		**$36,000**
8251	**HOL MTL DOORS-FRAMES & HDWR**							
	3-0X7-0 INT HOL MTL DOOR & FRAME W/HARDWARE - UL LABELED	14 EA	$500.00	$7,000	$1,750.00	$24,500	$2,250.00	$31,500
	TOTAL OF HOL MTL DOORS-FRAMES & HDWR			**$7,000**		**$24,500**		**$31,500**
8360	**OVERHEAD DOORS**							
	20-0X14-0 OVERHEAD ROLL-UP DOOR ELECTRIC	3 EA	$3,206.61	$9,620	$11,116.90	$33,351	$14,323.51	$42,971
	TOTAL OF OVERHEAD DOORS			**$9,620**		**$33,351**		**$42,971**
8520	**ALUMINUM WINDOWS**							
	ALUMINUM FRM FIXED TYPE WINDOW - 6.35 MM(1/4") CLEAR	297 SF	$10.73	$3,187	$35.61	$10,576	$46.34	$13,763
	TOTAL OF ALUMINUM WINDOWS			**$3,187**		**$10,576**		**$13,763**
	TOTAL OF 08-OPENINGS			**$25,807**		**$98,427**		**$124,234**
	09-FINISHES							
9100	**INTERIOR FINISH OUT**							
	1/2" WP GYPSUM BOARD/INSTALLED/TAPED & FINISHED	1,613 SF	$1.25	$2,016	$0.65	$1,048	$1.90	$3,064
	2-0X4-0 SUSP ACOUSTIC CEILING 5/8" MINERAL TILE	9,000 SF	$0.47	$4,230	$1.01	$9,090	$1.48	$13,320
	4-1/4" X 4-1/4" CERAMIC TILE TO WALLS	2,295 SF	$4.00	$9,182	$4.00	$9,182	$8.00	$18,363
	5/8" GYPSUM BOARD/INSTALLED/TAPED & FINISHED	20,310 SF	$1.25	$25,388	$0.75	$15,233	$2.00	$40,620
	5/8" GYPSUM WALLBOARD CEILING, 1 LAYER, FIRE RATED	4,829 SF	$1.25	$6,037	$0.75	$3,622	$2.00	$9,658
	CONCRETE FLOOR SEALER	4,338 SF	$0.08	$347	$0.11	$477	$0.19	$824
	MTL STUD PARTITION, 3-5/8"	10,155 SF	$1.00	$10,155	$0.50	$5,078	$1.50	$15,233
	PAINT TO CONCRETE WALLS-ONE COAT PRIMER, ONE COAT PAINT	15,900 SF	$1.00	$15,900	$0.50	$7,950	$1.50	$23,850

CITY OF AUSTIN FIRE STATION NO.22

LAWRENCE GROUP
900 EAST 6TH STREET SUITE 105
AUSTIN, TX

PREPARED BY:
SUNLAND GROUP
SAN ANTONIO, TEXAS

--DETAIL REPORT--

PROJECT
ESTIMATE

DATE: 03/02/2019 08:40:35 PM
JOB NO.: COA FS22
PROJECT: CITY OF AUSTIN FIRE STATION NO.22
AUSTIN, TX

CODE	DESCRIPTION	QTY	UNIT LABOR	TOTAL LABOR	UNIT MATL	TOTAL MATL	UNIT PRICE	TOTAL
	PAINT TO GYPSUM BOARD WALLS USING ROLLER	20,310 SF	$1.00	$20,310	$0.50	$10,155	$1.50	$30,465
	POLYSTYRENE RIGID WALL INSULATION, 25.4 MM(1") THICK	12,501 SF	$0.59	$7,376	$0.49	$6,125	$1.08	$13,501
	RECESSED RUBBER FLOOR MAT	442 SF	$2.42	$1,069	$21.62	$9,547	$24.04	$10,616
	SUSPENSION SYSTEM FOR GYPSUM BOARD CEILING	4,829 SF	$4.07	$19,655	$0.96	$4,636	$5.03	$24,291
	THIN SET NATURAL CLAY CERAMIC TILE FLOOR AND BASE	873 SF	$4.00	$3,494	$4.00	$3,494	$8.00	$6,987
	VINYL TILE 1/8" X 12" X 12"	5,024 SF	$1.13	$5,677	$5.78	$29,039	$6.91	$34,716
	TOTAL OF INTERIOR FINISH OUT			**$130,833**		**$114,675**		**$245,508**
	TOTAL OF 09-FINISHES			**$130,833**		**$114,675**		**$245,508**
	10-SPECIALTIES							
10160	**TOILET PARTITIONS & SCREENS**							
	12" X 15" X 36" DOUBLE TIER LOCKERS	25 EA	$18.66	$467	$221.75	$5,544	$240.41	$6,010
	CABINETRY MILLWORK	150 LF	$125.00	$18,750	$250.00	$37,500	$375.00	$56,250
	DOOR SIGN, 4" X 8"	15 EA	$11.69	$175	$37.12	$557	$48.81	$732
	FIRE EXTINGUISHER CABINET, 8" X 12" X 27"	1 EA	$127.15	$127	$184.17	$184	$311.32	$311
	FIRE EXTINGUISHER CABINET, 8" X 16" X 38"	2 EA	$127.15	$254	$209.54	$419	$336.69	$673
	TOILET PARTITION AND ACCESSORIES	100 EA	$56.25	$5,625	$131.25	$13,125	$187.50	$18,750
	TURNOUT LOCKERS	90 LF	$33.75	$3,021	$33.75	$3,021	$67.50	$6,041
	TOTAL OF TOILET PARTITIONS & SCREENS			**$28,419**		**$60,349**		**$88,768**
	TOTAL OF 10-SPECIALTIES			**$28,419**		**$60,349**		**$88,768**
	11-EQUIPMENT							
11400	**FOOD SERVICE EQUIPMENT**							
	COMMERCIAL GARBAGE DISPOSAL - OFCI	1 EA	$200.81	$201			$200.81	$201
	COMMERCIAL OVEN - GAS - OFCI	1 EA	$196.80	$197			$196.80	$197
	DISHWASHER RACK TYPE - OFCI	1 EA	$196.80	$197			$196.80	$197
	ICE MACHINE 200 LB/DAY - OFCI	1 EA	$41.03	$41			$41.03	$41
	SHEET METAL EQUIPMENT HOOD 36" X 36"	1 EA	$245.12	$245	$372.89	$373	$618.01	$618
	TOTAL OF FOOD SERVICE EQUIPMENT			**$881**		**$373**		**$1,253**
	TOTAL OF 11-EQUIPMENT			**$881**		**$373**		**$1,253**
	13-SPEC CONSTRUCTION							
13411	**STEEL TANKS GROUND LEVEL**							
	CANOPY, LIGHTS, BOLLARDS, PAD	1 EA	$25,000.00	$25,000	$75,000.00	$75,000	$100,000.00	$100,000
	FUEL STEEL STORAGE TANK 5000 GAL ABOVEGROUND, LEAK DETECTION, PUMPS CONTROLS	1 EA	$50,000.00	$50,000	$100,000.00	$100,000	$150,000.00	$150,000
	TOTAL OF STEEL TANKS GROUND LEVEL			**$75,000**		**$175,000**		**$250,000**
	TOTAL OF 13-SPEC CONSTRUCTION			**$75,000**		**$175,000**		**$250,000**
	14-CONVEYING SYSTEM							
14200	**ELEVATORS**							
	ELEVATOR	2 STOP			$65,000.00	$130,000	$65,000.00	$130,000
	TOTAL OF ELEVATORS					**$130,000**		**$130,000**

CITY OF AUSTIN FIRE STATION NO.22

LAWRENCE GROUP
900 EAST 6TH STREET SUITE 105
AUSTIN, TX

--DETAIL REPORT--

PROJECT
ESTIMATE

DATE: 03/02/2019 08:40:35 PM
JOB NO.: COA FS22
PROJECT: CITY OF AUSTIN FIRE STATION NO.22
AUSTIN, TX

PREPARED BY:
SUNLAND GROUP
SAN ANTONIO, TEXAS

CODE	DESCRIPTION	QTY	UNIT LABOR	TOTAL LABOR	UNIT MATL	TOTAL MATL	UNIT PRICE	TOTAL
	TOTAL OF 14-CONVEYING SYSTEM					**$130,000**		**$130,000**
	21-FIRE SUPPERSSION							
21501	**SPRINKLER SYSTEMS**							
	FIRE SPRINKLER SYSTEM	11,315 BDSF	$2.00	$22,630	$2.00	$22,630	$4.00	$45,260
	TOTAL OF SPRINKLER SYSTEMS			**$22,630**		**$22,630**		**$45,260**
	TOTAL OF 21-FIRE SUPPERSSION			**$22,630**		**$22,630**		**$45,260**
	22-PLUMBING							
22027	**PLUMBING SYSTEMS**							
	8 GPH ELECTRIC WATER COOLER - WALL MOUNTED	2 EA	$396.79	$794	$1,021.85	$2,044	$1,418.64	$2,837
	COPPER PIPE & FITTINGS (1/2" TO 4" DIA. PIPING)	20 EA	$891.19	$17,824	$899.53	$17,991	$1,790.72	$35,814
	DOMESTIC WATER HEATER GAS - 196.8 L(52 GAL.)	1 EA	$447.08	$447	$924.88	$925	$1,371.96	$1,372
	FIBERGLASS SHOWER UNIT	5 EA	$212.13	$1,061	$648.35	$3,242	$860.48	$4,302
	FLOOR MOUNTED URINAL	2 EA	$421.71	$843	$671.84	$1,344	$1,093.55	$2,187
	FLOOR MOUNTED WATER CLOSET	3 EA	$199.35	$598	$218.93	$657	$418.28	$1,255
	JANITOR SINK - FLOOR TYPE	1 EA	$240.25	$240	$930.23	$930	$1,170.48	$1,170
	MEDIUM DUTY AND HEAVY DUTY CAST IRON FLOOR DRAINS	4 EA	$267.08	$1,068	$937.99	$3,752	$1,205.07	$4,820
	PVC VENT PIPING	20 EA	$195.60	$3,912	$43.31	$866	$238.91	$4,778
	RESIDENTIAL WATER HEATER & HOSE BIBB PIPING	4 EA	$208.65	$835	$114.92	$460	$323.57	$1,294
	S.S. SINK, DOUBLE BOWL 32 X 21 X 7	1 EA	$221.08	$221	$902.05	$902	$1,123.13	$1,123
	SHOWER VALVE, DRAIN FOR CERAMIC TILE SHOWER	5 EA	$1,813.40	$9,067	$1,556.84	$7,784	$3,370.24	$16,851
	VALVES & HYDRANTS	9 EA	$36.28	$327	$292.43	$2,632	$328.71	$2,958
	WALL HUNG 20" BY 18" WHITE SINGLE BOWL LAVATORY	5 EA	$771.85	$3,859	$701.90	$3,510	$1,473.75	$7,369
	WALL HUNG 24" BY 20" JANITORS SINK OF PORCELAIN ENAMEL	1 EA	$1,082.38	$1,082	$2,475.93	$2,476	$3,558.31	$3,558
	WASTE PIPE & FITTINGS	20 EA	$1,009.89	$20,198	$689.59	$13,792	$1,699.48	$33,990
	TOTAL OF PLUMBING SYSTEMS			**$62,376**		**$63,305**		**$125,681**
	TOTAL OF 22-PLUMBING			**$62,376**		**$63,305**		**$125,681**
	23-HVAC							
23650	**HVAC SYSTEM**							
	1000 MBH NATURAL GAS SUPPLY	1 EA	$2,786.46	$2,786	$2,155.98	$2,156	$4,942.44	$4,942
	70.34 KW (20 TON) AIR COOLED PACKAGED SCROLL CHILLER W/MECH. ROOM PIPING	1 EA	$16,321.40	$16,321	$60,694.90	$60,695	$77,016.30	$77,016
	COMPRESSED AIR SYSTEM FOR A MAINT. SHOP	1 EA	$11,798.58	$11,799	$13,776.44	$13,776	$25,575.02	$25,575
	DUCTWORK	11,315 SF	$2.25	$25,459	$2.25	$25,459	$4.50	$50,918
	GARAGE VEHICLE EXHAUST SYSTEM (3500 CFM PER)	10,500 CFM	$1.40	$14,700	$0.87	$9,135	$2.27	$23,835
	GAS FIRED UNIT HEATER, 8.79 KW(30 MBH)	3 EA	$560.81	$1,682	$1,723.48	$5,170	$2,284.29	$6,853
	HOT WATER BOILER ONLY, GAS FIRED 250 MBH	1 EA	$2,523.85	$2,524	$3,922.96	$3,923	$6,446.81	$6,447
	HVAC CONTROLS	11,315 SF	$1.18	$13,352	$1.87	$21,159	$3.05	$34,511

CITY OF AUSTIN FIRE STATION NO.22

LAWRENCE GROUP
900 EAST 6TH STREET SUITE 105
AUSTIN, TX

PREPARED BY:
SUNLAND GROUP
SAN ANTONIO, TEXAS

--DETAIL REPORT--

PROJECT
ESTIMATE

DATE: 03/02/2019 08:40:35 PM
JOB NO.: COA FS22
PROJECT: CITY OF AUSTIN FIRE STATION NO.22
AUSTIN, TX

CODE	DESCRIPTION	QTY	UNIT LABOR	TOTAL LABOR	UNIT MATL	TOTAL MATL	UNIT PRICE	TOTAL
	TOTAL OF HVAC SYSTEM			**$88,623**		**$141,474**		**$230,097**
	TOTAL OF 23-HVAC			**$88,623**		**$141,474**		**$230,097**
	26-ELECTRICAL							
26001	**ELECTRICAL SYSTEM**							
	60KW GENERATOR	1 EA	$3,000.00	$3,000	$57,000.00	$57,000	$60,000.00	$60,000
	BUILDING GROUNDING	2 EA	$394.87	$790	$311.02	$622	$705.89	$1,412
	ELECTRIC CAR CHARGER	1 EA			$25,000.00	$25,000	$25,000.00	$25,000
	ELECTRICAL PANELS	2 EA	$1,565.33	$3,131	$3,455.25	$6,911	$5,020.58	$10,041
	LIGHT FIXTURES	138 EA	$112.50	$15,525	$487.50	$67,275	$600.00	$82,800
	LIGHTING PROTECTION SYSTEM	5 EA	$267.11	$1,336	$181.21	$906	$448.32	$2,242
	WIRING DEVICES, CONDUIT, WIRE, BOXES AND COVERS	102 EA	$435.00	$44,370	$174.05	$17,753	$609.05	$62,123
	TOTAL OF ELECTRICAL SYSTEM			**$68,151**		**$175,467**		**$243,618**
	TOTAL OF 26-ELECTRICAL			**$68,151**		**$175,467**		**$243,618**
	27-COMMUNICATIONS							
27005	**COMMUNICATIONS SYSTEMS**							
	A/V SYSTEM INFRASTRUCTURE	11,315 BDSF	$1.00	$11,315	$1.00	$11,315	$2.00	$22,630
	COMMUNICATION SYSTEM INFRASTRUCTURE	11,315 BDSF	$1.00	$11,315	$1.00	$11,315	$2.00	$22,630
	SECURITY SYSTEM INFRASTRUCTURE	11,315 BDSF	$1.00	$11,315	$1.00	$11,315	$2.00	$22,630
	TOTAL OF COMMUNICATIONS SYSTEMS			**$33,945**		**$33,945**		**$67,890**
	TOTAL OF 27-COMMUNICATIONS			**$33,945**		**$33,945**		**$67,890**
	28-ELECTRONIC SAFETY & SECURITY							
28721	**FIRE ALARM SYSTEMS**							
	FIRE ALARM SYSTEM	11,315 BDSF	$2.00	$22,630	$2.00	$22,630	$4.00	$45,260
	TOTAL OF FIRE ALARM SYSTEMS			**$22,630**		**$22,630**		**$45,260**
	TOTAL OF 28-ELECTRONIC SAFETY & SECURITY			**$22,630**		**$22,630**		**$45,260**
	32-EXTERIOR IMPROVEMENTS							
32480	**LANDSCAPING**							
	LANDSCAPING	1 ALLO			$25,000.00	$25,000	$25,000.00	$25,000
	RAIN GARDEN	1 ALLO			$25,000.00	$25,000	$25,000.00	$25,000
	TOTAL OF LANDSCAPING					**$50,000**		**$50,000**
32510	**WALKWAYS AND PADS**							
	SIDEWALKS	1,200 SF	$2.72	$3,264	$2.95	$3,540	$5.67	$6,804
	TOTAL OF WALKWAYS AND PADS			**$3,264**		**$3,540**		**$6,804**
32515	**CONCRETE PAVING**							
	DRIVE LANES - 10" PAVEMENT 10"BASE	8,190 SF	$8.00	$65,520	$12.00	$98,280	$20.00	$163,800
	ORNAMENTAL FENCE	1,000 LF	$15.00	$15,000	$55.00	$55,000	$70.00	$70,000
	PARKING LOT - 6" PAVEMENT 6" BASE	5,460 SF	$5.00	$27,300	$8.00	$43,680	$13.00	$70,980
	TOTAL OF CONCRETE PAVING			**$107,820**		**$196,960**		**$304,780**
	TOTAL OF 32-EXTERIOR IMPROVEMENTS			**$111,084**		**$250,500**		**$361,584**
	33-UTILITIES							

CITY OF AUSTIN FIRE STATION NO.22

LAWRENCE GROUP
900 EAST 6TH STREET SUITE 105
AUSTIN, TX

--DETAIL REPORT--

PROJECT
ESTIMATE

DATE: 03/02/2019 08:40:35 PM
JOB NO.: COA FS22
PROJECT: CITY OF AUSTIN FIRE STATION NO.22
AUSTIN, TX

PREPARED BY:
SUNLAND GROUP
SAN ANTONIO, TEXAS

CODE	DESCRIPTION	QTY	UNIT LABOR	TOTAL LABOR	UNIT MATL	TOTAL MATL	UNIT PRICE	TOTAL
33400	**DRAINAGE**							
	RETENTION POND	1 ALLO			$25,000.00	$25,000	$25,000.00	$25,000
	TOTAL OF DRAINAGE					**$25,000**		**$25,000**
33711	**GAS SYSTEMS**							
	GAS SERVICE	200 LF	$7.03	$1,406	$6.74	$1,348	$13.77	$2,754
	TOTAL OF GAS SYSTEMS			**$1,406**		**$1,348**		**$2,754**
33713	**WATER SYSTEMS**							
	DOMESTIC WATER BACKFLOW PREVENTERS	1 EA	$84.38	$84	$1,704.75	$1,705	$1,789.13	$1,789
	DOMESTIC WATER METER	1 EA	$97.84	$98	$418.13	$418	$515.97	$516
	DOMESTIC WATER SUPPLY	200 LF	$5.81	$1,162	$8.20	$1,640	$14.01	$2,802
	UTILITY IMPACT FEES	1 EA			$20,000.00	$20,000	$20,000.00	$20,000
	TOTAL OF WATER SYSTEMS			**$1,344**		**$23,763**		**$25,107**
33722	**SEWAGE SYSTEMS**							
	SANITARY SEWER SERVICE	200 LF	$9.48	$1,896	$9.65	$1,930	$19.13	$3,826
	TOTAL OF SEWAGE SYSTEMS			**$1,896**		**$1,930**		**$3,826**
33812	**UNDERGROUND DISTRIBUTION**							
	ELECTRICAL SERVICE	200 LF	$40.43	$8,086	$60.34	$12,068	$100.77	$20,154
	TOTAL OF UNDERGROUND DISTRIBUTION			**$8,086**		**$12,068**		**$20,154**
33821	**TELEPHONE LINES**							
	COMMUNICATIONS SYSTEMS	200 LF	$9.18	$1,836	$12.21	$2,442	$21.39	$4,278
	TOTAL OF TELEPHONE LINES			**$1,836**		**$2,442**		**$4,278**
33840	**SITE LIGHTING**							
	SITE LIGHTING	6 POLE	$5,583.15	$33,499	$9,362.34	$56,174	$14,945.49	$89,673
	TOTAL OF SITE LIGHTING			**$33,499**		**$56,174**		**$89,673**
	TOTAL OF 33-UTILITIES			**$48,067**		**$122,725**		**$170,792**
	TOTAL DIRECT COST			**$1,347,618**		**$2,082,554**		**$3,430,171**
	GC OH & GEN CONDITIONS	20.00%		$269,524		$416,511		$686,034
	GC FEE	14.00%		$226,400		$349,869		$576,269
	CONSTRUCTION CONTINGENCY	20.00%		$368,708		$569,787		$938,495
	ESCALATION (2 YEARS AT 3% PER YEAR)	6.00%		$132,735		$205,123		$337,858
	TOTAL OF COA - FIRE STATION NO.22			**$2,344,984**		**$3,623,843**		**$5,968,827**

C. Summary Schedule of Design and Construction Phasing

Sunland GROUP

Classic Schedule Layout

Activity ID	Activity Name	Original Duration	Start	Finish
DCM-4 COA Fire Station 22		740	03-Jun-19	01-Apr-22
DCM-4.2 Milestones		447	16-Jul-20	01-Apr-22
A1000	Substantial Completion	0		01-Apr-22
A1190	Start Demo/Construction	0	16-Jul-20	
DCM-4.1 Design		293	03-Jun-19	15-Jul-20
DCM-4.1.2 Schematic Design		84	03-Jun-19	26-Sep-19
A1010	Schematic Design	56	03-Jun-19	19-Aug-19
A1012	Owner QMR	14	20-Aug-19	06-Sep-19
A1014	AE Team Response	14	09-Sep-19	26-Sep-19
A1016	COA Next Phase NTP	0		26-Sep-19
DCM-4.1.3 Design Development		84	27-Sep-19	22-Jan-20
A1020	Design Development	56	27-Sep-19	13-Dec-19
A1440	Owner QMR	14	16-Dec-19	02-Jan-20
A1450	AE Team Response	14	03-Jan-20	22-Jan-20
A1460	COA Next Phase NTP	0		22-Jan-20
DCM-4.1.4 Construction Documents		105	23-Jan-20	17-Jun-20
A1030	Construction Documents	77	23-Jan-20	08-May-20
A1470	Owner QMR	14	11-May-20	28-May-20
A1480	AE Team Response	14	29-May-20	17-Jun-20
A1490	COA Next Phase NTP	0		17-Jun-20
DCM-4.1.5 Client Submittal Review		20	18-Jun-20	15-Jul-20
A1040	Review Submittal Documen	20	18-Jun-20	15-Jul-20
DCM-4.1.6 Issue for Bid		0	15-Jul-20	15-Jul-20
A1050	Establish GMP	0		15-Jul-20
DCM-4.12 Construction		447	16-Jul-20	01-Apr-22
DCM-4.12.1 Demolition		60	16-Jul-20	07-Oct-20
DCM-4.12.1.1 Remediation and Abate		60	16-Jul-20	07-Oct-20
A1500	Remediation and Abatemer	40	16-Jul-20	09-Sep-20
A1510	Demo Existing Facility	20	10-Sep-20	07-Oct-20
DCM-4.12.15 Site Package		98	10-Jun-21	25-Oct-21
A1380	Parking	21	10-Jun-21	08-Jul-21
A1390	Fencing	7	09-Jul-21	19-Jul-21
A1400	Fueling Station	21	20-Jul-21	17-Aug-21

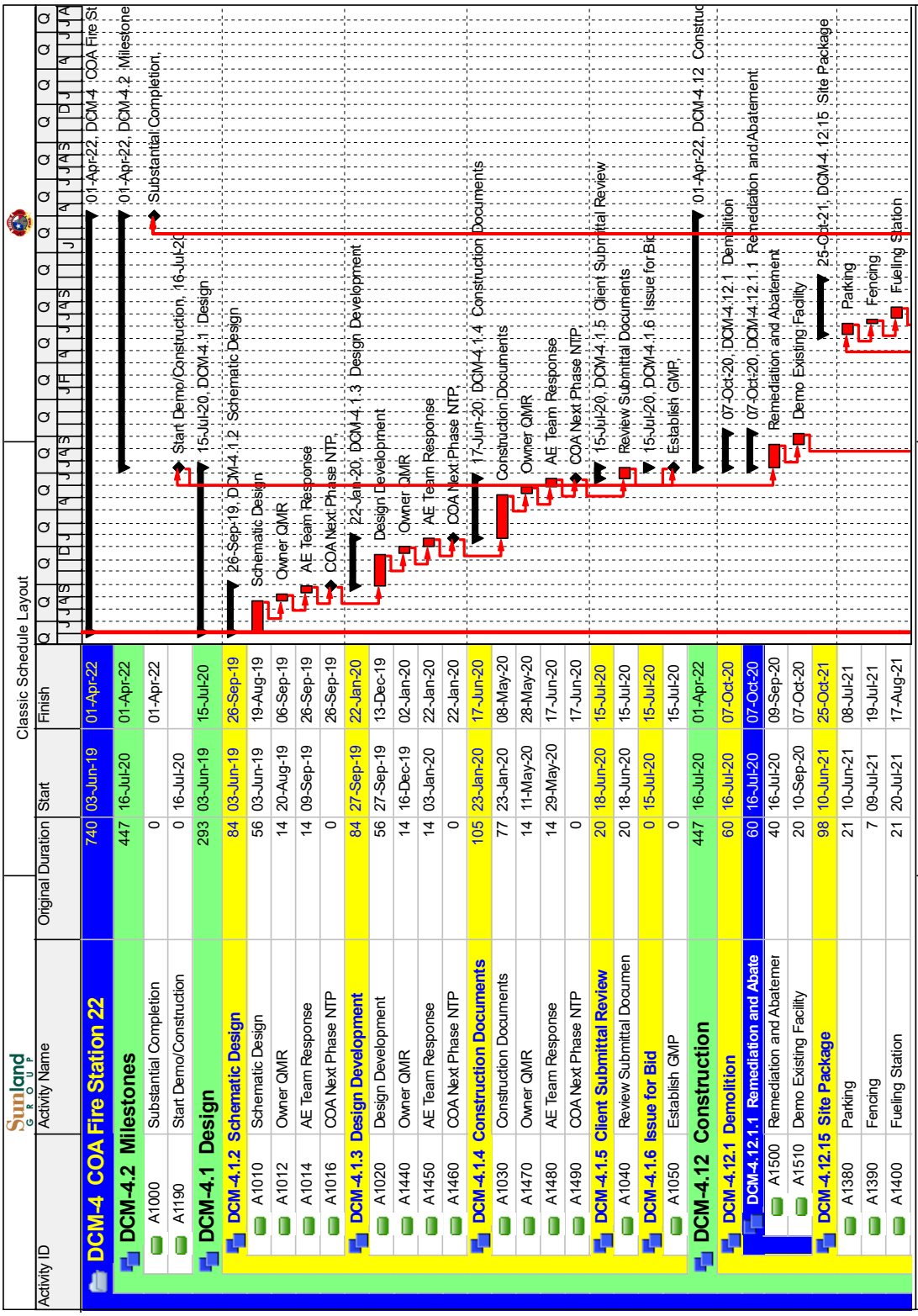

Actual Level of Effort | Remaining Work
Actual Work | Critical Remainin...

Page 1 of 2

TASK filter: All Activities

© Oracle Corporation

Sunland GROUP

Classic Schedule Layout

Activity ID	Activity Name	Original Duration	Start	Finish
A1410	Canopy	14	18-Aug-21	06-Sep-21
A1420	Detention Pond	21	07-Sep-21	05-Oct-21
A1430	Water Garden/Landscaping	14	06-Oct-21	25-Oct-21
DCM-4.12.2 Construction/Installation		**387**	**08-Oct-20**	**01-Apr-22**
DCM-4.12.2.2 Foundation		**35**	**08-Oct-20**	**25-Nov-20**
A1360	Install Foundation	35	08-Oct-20	25-Nov-20
DCM-4.12.2.3 Plumbing		**28**	**26-Nov-20**	**04-Jan-21**
A1350	Install Plumbing	28	26-Nov-20	04-Jan-21
DCM-4.12.2.5 Walls and Partitions		**28**	**05-Jan-21**	**11-Feb-21**
A1330	Install Walls and Partitions	28	05-Jan-21	11-Feb-21
DCM-4.12.2.10 Windows		**28**	**12-Feb-21**	**23-Mar-21**
A1280	Install Windows	28	12-Feb-21	23-Mar-21
DCM-4.12.2.7 Ceilings		**28**	**24-Mar-21**	**30-Apr-21**
A1310	Install Ceilings	28	24-Mar-21	30-Apr-21
DCM-4.12.2.4 Electrical		**28**	**03-May-21**	**09-Jun-21**
A1340	Install Electrical	28	03-May-21	09-Jun-21
DCM-4.12.2.6 Floors		**28**	**10-Jun-21**	**19-Jul-21**
A1320	Install Floors	28	10-Jun-21	19-Jul-21
DCM-4.12.2.8 HVAC		**28**	**20-Jul-21**	**26-Aug-21**
A1300	Install HVAC	28	20-Jul-21	26-Aug-21
DCM-4.12.2.9 Doors		**28**	**27-Aug-21**	**05-Oct-21**
A1290	Install Doors	28	27-Aug-21	05-Oct-21
DCM-4.12.2.11 Fire Alarm		**28**	**06-Oct-21**	**12-Nov-21**
A1270	Install Fire Alarm	28	06-Oct-21	12-Nov-21
DCM-4.12.2.12 Fire Sprinkler		**28**	**15-Nov-21**	**22-Dec-21**
A1260	Install Fire Sprinkler	28	15-Nov-21	22-Dec-21
DCM-4.12.2.13 Communications		**21**	**23-Dec-21**	**20-Jan-22**
A1250	Install Communications	21	23-Dec-21	20-Jan-22
DCM-4.12.2.14 Security		**21**	**21-Jan-22**	**18-Feb-22**
A1240	Install Security	21	21-Jan-22	18-Feb-22
DCM-4.12.2.1 Punch List		**30**	**21-Feb-22**	**01-Apr-22**
A1370	Punch List Items	30	21-Feb-22	01-Apr-22

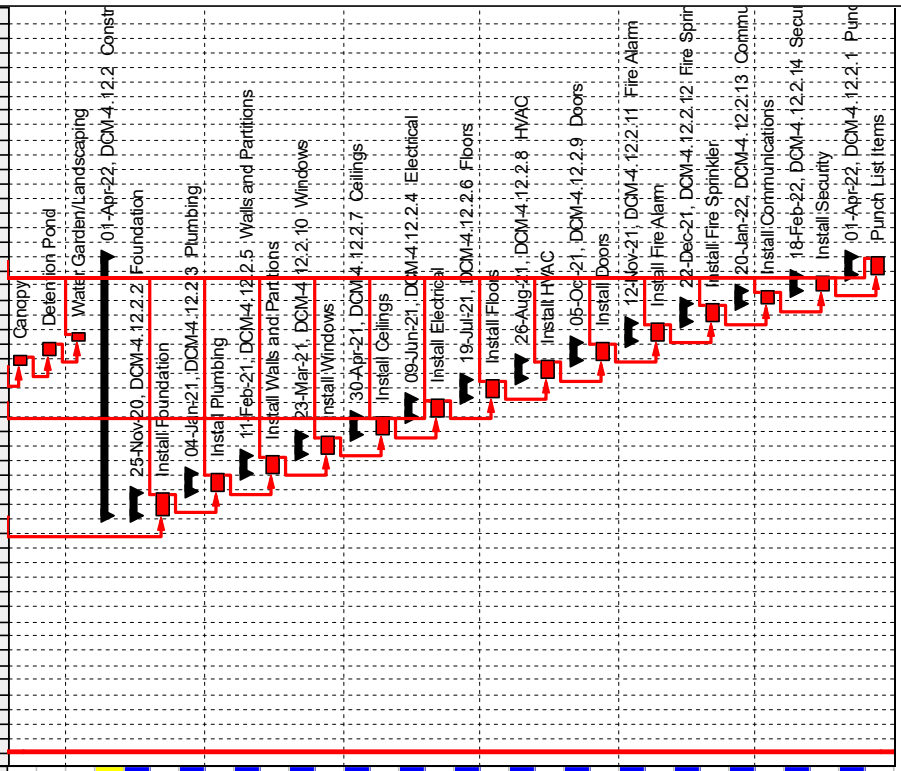

Actual Level of Effort | Remaining Work
Actual Work | Critical Remainin...

Page 2 of 2

TASK filter: All Activities

© Oracle Corporation

10 | Appendices

Site Analysis Exhibits

Index

1. **AFD 1 / EMS 6 Lease**
2. **AFD 1 / EMS 6 Wastewater Tap Record**
3. **AFD 1 / EMS 6 Topography & Improvement Survey**
4. **AFD 3 Deed**
5. **AFD 3 Water Tap Record**
6. **AFD 3 Wasterwater Tap Record**
7. **AFD 3 Flood Profiles (1 of 2)**
8. **AFD 3 Flood Profiles (2 of 2)**
9. **AFD 22 / EMS 12 Deed**
10. **AFD 22 / EMS 12 Water Tap Record**
11. **AFD 22 / EMS 12 Existing Site Plan (1 of 2)**
12. **AFD 22 / EMS 12 Existing Site Plan (2 of 2)**
13. **Addition to EMS 12 (1 of 5)**
14. **Addition to EMS 12 (2 of 5)**
15. **Addition to EMS 12 (3 of 5)**
16. **Addition to EMS 12 (4 of 5)**
17. **Addition to EMS 12 (5 of 5)**

AFD 1 / EMS 6 Lease

CHAPTER 1343 S.B. No. 1023

AN ACT

relating to the renewal and extension and modification of a 99-year lease of certain state property to the City of Austin.

BE IT ENACTED BY THE LEGISLATURE OF THE STATE OF TEXAS:

SECTION 1. Chapter 34 (H.B. 215), General Laws, Acts of the 33rd Legislature, Regular Session, 1913, is amended by amending Section 2 and adding Sections 2A and 2B to read as follows:

Sec. 2. That the State of Texas hereby cedes and grants to the City of Austin the plot or square of land described in Section 1 of the Act for a period of ninety-nine years beginning on August 15, 2016, [~~from the taking effect hereof~~] and said City through its municipal authorities, be and the same is hereby authorized and empowered to:

(1) establish, operate and maintain upon the land described by Section 1 of this Act [~~said block bounded on the North by Fifth street, on the south by Fourth street, on the East by Guadalupe street, and on the West by San Antonio street,~~] a municipal auditorium and market, in which auditorium, theatres, operas, concerts, lectures, fairs, shows and public exhibitions and entertainments generally can be conducted with or without pay; and in this market all kinds of produce may be bought and sold either in the open square or in a market house constructed thereon; and

(2) construct, operate, and maintain public amenities on the land described by Section 1 of this Act.

1

S.B. No. 1023

Sec. 2A. (a) Subject to Section 2B of this Act, the State of Texas grants to the City of Austin for a period of 99 years beginning on August 15, 2016, a lease of the property described as follows:

(1) Tract 1. Wooldridge Park. The northwest Public Square now known as Wooldridge Park, bounded on the north by Mulberry Street (now W. 10th Street), on the east by Guadalupe Street, on the south by Ash Street (now W. 9th Street), and on the west by San Antonio Street, and being 276 feet square, as delineated on the map titled "Plan of the City of Austin 1840" filed in the General Land Office; and

(2) Tract 2. Brush Park. The southeast Public Square now known as Brush Park, bounded on the north by Pine Street (now E. 5th Street), on the east by Neches Street, on the south by Cedar Street (now E. 4th Street), and on the west by Trinity Street, and being 276 feet square as delineated on the map titled "Plan of the City of Austin 1840" filed in the General Land Office.

(b) Except as provided by Subsection (c) of this section, the City of Austin may only use the tracts described by Subsection (a) of this section as municipal parks in which:

(1) theatres, operas, concerts, lectures, fairs, shows, and public exhibitions and entertainments generally can be conducted with or without pay; and

(2) produce may be bought and sold.

(c) The City of Austin may construct, operate, and maintain public amenities on the tracts described by Subsection (a) of this section.

2

S.B. No. 1023

Sec. 2B. (a) The[~~, provided, however, that the~~] state does not by this Act part with any title, color of title or interest which it now owns in the property described in this Act [~~bill~~], except as granted herein.

(b) In the event, however, the City of Austin should fail to use the property [~~plot of land~~] described in Section 1 or 2A(a)(1) or (2) of this Act [~~herein~~] for the purpose or purposes designated, that property [~~the same~~] shall revert to the State as upon breach of condition subsequent.

(c) The legislature, by concurrence of both houses, may terminate the lease, or a portion thereof, at any time for any reason.

SECTION 2. This Act takes effect August 15, 2016.

3

S.B. No. 1023

David Dewhurst
President of the Senate

Joe Straus
Speaker of the House

I hereby certify that S.B. No. 1023 passed the Senate on April 11, 2013, by the following vote: Yeas 31, Nays 0; and that the Senate concurred in House amendment on March 24, 2013, by the following vote: Yeas 31, Nays 0.

Patricia Gray
Secretary of the Senate

I hereby certify that S.B. No. 1023 passed the House, with amendment, on May 15, 2013, by the following vote: Yeas 144, Nays 3, two present not voting.

Robert Haney
Chief Clerk of the House

Approved:

14 JUNE '13
Date

RICK PERRY
Governor

FILED IN THE OFFICE OF THE SECRETARY OF STATE
10pm O'CLOCK
JUN 14 2013
Secretary of State

4

AFD 1 / EMS 6 Wastewater Tap Record

SANITARY SEWER SERVICE PERMIT No. 13924

Austin, Texas

Received of _____ Date 12/30/1937

Address 401 E. 5th.

Amount Twelve Dollars $ 12.00

Builder or Owner city of Austin Plumber _____

Lot Brush Square Block _____ Subdivision _____ Plat No. 10

Date of Connection 3/1/1938

By City 63' E/E. curb of Trinity St

By Plumber _____

Checked By Boatright

Size Main 4" Depth 5'

Main Assign. in Park

Stub Depth _____ Prop. Line _____

Stub Location _____

Book No. B-627

Paving Cut _____ No. _____

No.	Fittings	Size	Price
55'	Pipe	4"	6.05
	Pipe		
	Wyes		
2	Bends	4"	1.20
	Reducers		
	Plugs		
	Sand		
	Gravel		
	Remix		
	Stoppers		
	Castings		
	Other		
	Labor:	1 day	3.28
		2 days	6.00
		total	16.53

AFD 1 / EMS 6 Topo. & Improvement Survey

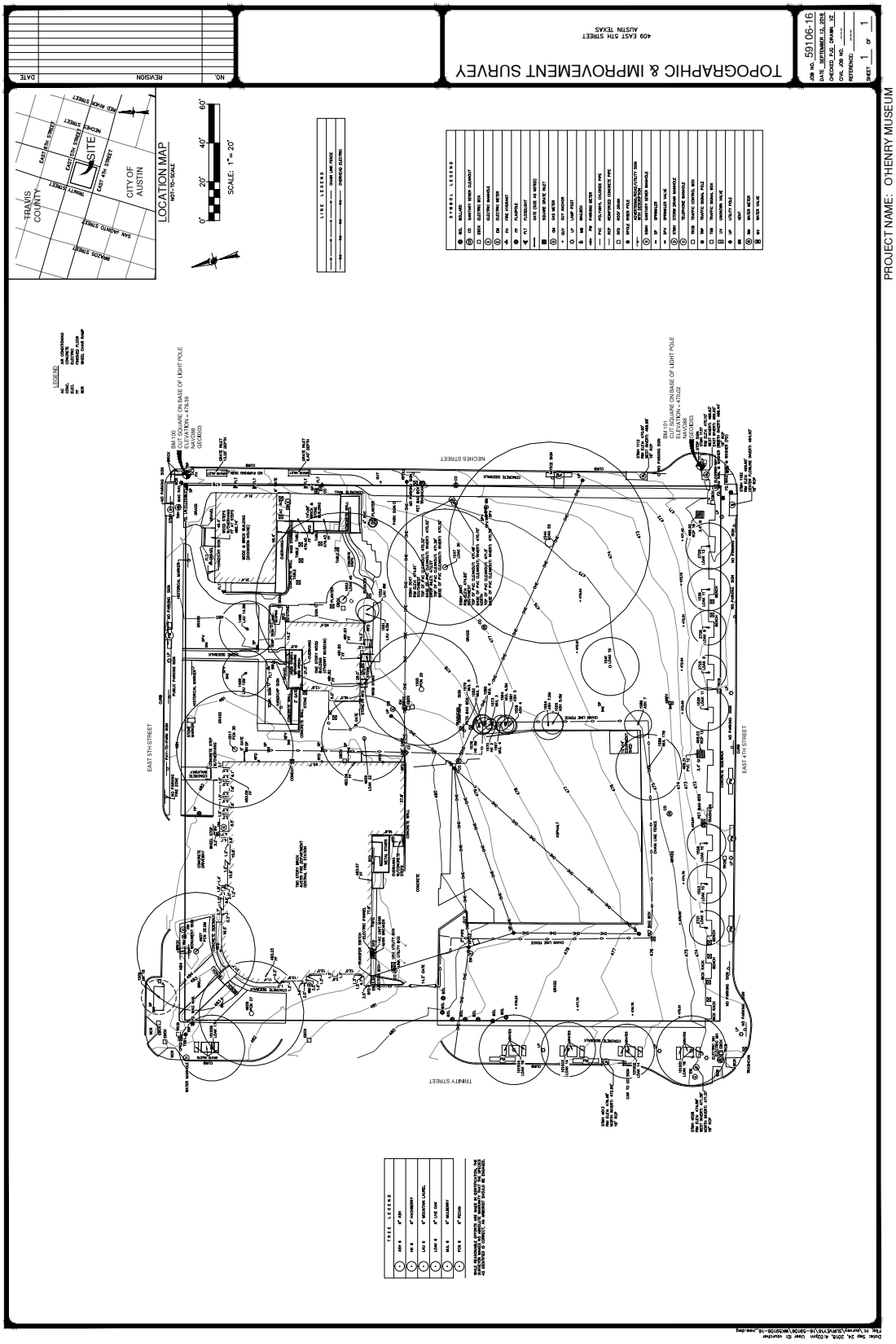

AFD 3 Deed

Chas. Wendlandt, Jr.

(Notary Seal) Notary Public, in and for Travis County, State of Texas.

Filed For Record Mch. 27, 1929 at 4:15 P. M. Recorded Mch. 29, 1929 at 10:50 A. M.

THE STATE OF TEXAS, #

COUNTY OF TRAVIS. # KNOW ALL MEN BY THESE PRESENTS:

That I, Mrs. Christina Ing, a widow, of Travis County, Texas, for and in consideration of the sum of Eight Hundred ($800:00) Dollars, cash to me in hand paid by City of Austin, the receipt of which is hereby acknowledged, have granted, sold and conveyed, and by these presents do grant, sell and convey unto said City of Austin, a municipal corporation situated in Travis County, Texas, the following described land and premises, towit: Lot Fifteen (15), in Block Two (2); said lot being of and in Fruth Addition, a Subdivision of Outlot 73, in Division "D" of the City of Austin, in Travis County, Texas, according to the map or plat of said Subdivision, as the same appears of record in Plat Book No. 2, at page number 157, of the Plat Records of Travis County, Texas, to which reference is made for all pertinent purposes.

TO HAVE AND TO HOLD, the above described land and premises, together with all and singular the rights and appurtenances thereto in anywise belonging unto said City of Austin, its successor assigns, forever; and I do hereby bind myself, my heirs, executors and administrators to warrant and forever defend all and singular the said premises unto said City of Austin, its successors and assigns, against every person whomsoever lawfully claiming or to claim the same, or any part thereof, except taxes for the year 1929.

WITNESS MY HAND, this the 26th day of February, A. D., 1929.

Christina Ing.

THE STATE OF TEXAS, #

COUNTY OF TRAVIS. # BEFORE ME, a Notary Public in and for Travis County, Texas, on this day personally appeared Mrs. Christina Ing, a widow, known to me to be the person whose name is subscribed to the foregoing instrument, and she acknowledged to me that she signed the same for the purposes and consideration therein expressed.

GIVEN UNDER MY HAND, this the 26th day of February, A. D. 1929.

G. H. Brush

(Notary Seal) Notary Public, Travis County, Texas.

Filed For Record Mch. 27, 1929 at 4:15 P. M. Recorded Mch. 29, 1929 at 11:00 A. M.

THE STATE OF TEXAS, #

COUNTY OF TRAVIS. # Know all men by these presents:

That I, Elizabeth Moore, joined by my husband, Joseph D. Moore, for and in consideration of the sum of Eleven Thousand Five Hundred ($11,500.00) Dollars, cash to me in hand paid by City of Austin, the receipt of which is hereby acknowledged, have granted, sold and conveyed and by these presents do grant, sell and convey unto the said City of Austin, a municipal corporation, situated in Travis County, Texas, the following described land and premises, to-wit: Lots Numbers One (1), Two (2), Three (3), and Four (4), in Block Number Two (2); Lots Numbers Ten (10), Eleven (11), Twelve (12), Thirteen (13), Fourteen (14), Fifteen (15) and Sixteen (16), in Block Number Four (4); Lots Numbers Four (4), Five (5), Six (6), Seven (7), Eight (8) and Nine (9), in Block Number Five (5); and Lots Numbers Ten (10) and Eleven (11), in Block Number Eight (8); all of said Lots being of and in Fruth Addition, a Subdivision of Outlot 73, in Division "D", of the City of Austin, in Travis County, Texas, according to the map or plat of said Subdivision, as the same appears of record in Plat Book No. 2, at page number 157, of the Plat Records of Travis County, Texas, to which reference is made for all

pertinent purposes.

TO HAVE AND TO HOLD, the above described land and premises, together with all and singular the rights and appurtenances thereto in anywise belonging unto the said City of Austin, its successors or assigns, forever; and we do hereby bind ourselves, our heirs, executors and administrators, to warrant and forever defend all and singular the said premises unto the said City of Austin, its successors and assigns, against every person whomsoever lawfully claiming or to claim the same, or any part thereof, except taxes for year 1929.

WITNESS OUR HANDS, this the 7th day of March, A. D. 1929.

Elizabeth Moore

Joseph D. Moore

THE STATE OF TEXAS, #

COUNTY OF TRAVIS. # BEFORE ME, a notary public, in and for Travis County, Texas, on this day personally appeared Joseph D. Moore, known to me to be the person whose name is subscribed to the foregoing instrument and he acknowledged to me that he signed the same for the purposes and consideration therein expressed.

Also before me on this day personally appeared Elizabeth Moore, wife of the said Joseph D. Moore, known to me to be the person whose name is subscribed to the foregoing instrument, and having been examined by me privily and apart from her husband and having same fully explained to her, she, the said Elizabeth Moore, acknowledged such instrument to be her act and deed and declared thatshe had willingly signed the same for the purposes and consideration therein expressed, and that she did not wish to retract it.

GIVEN UNDER MY HAND and seal of office, this the 7th day of March A. D. 1929.

G. H. Brush

(Notary Seal) Notary public in and for Travis County, Texas.

Filed For Record Mch. 27, 1929 at 4:15 P. M. Recorded Mch. 29, 1929 at 11:15 A. M.

THE STATE OF TEXAS, #

DOUNTY OF TRAVIS. # KNOW ALL MEN BY THESE PRESENTS:

That we, Emilie S. Kreisle, a feme sole, and Arthur E. M. Kreisle, both of Travis County, Texas, for and in consideration of the sum of Five Thousand ($5000.00) Dollars, cash to us in hand paid by City of Austin, the receipt of which is hereby acknowledged, have granted, sold and conveyed, and by these presents do grant, sell and convey unto said City of Austin, a municipal corporation situated in Travis County, Texas, the following described land and premises, towit: Lots Numbers Seven (7), Eight (8), Nine (9), Ten (10), and Eleven (11), in Block Number Two (2), in Gammel & Taylor Subdivision of Outlot Number Forty-four (44), in Division "B", in the City of Austin, Travis County, Texas, according to the map or plat of said Subdivision of said Outlot Forty-four (44), as same appears of record in Plat Book Number 1, at page 77, of the Plat Records of Travis County, Texas, to which reference is made for all pertinent purposes.

TO HAVE AND TO HOLD the above described land and premises, together with all and singular the rights and appurtenances thereto in anywise belonging unto said City of Austin, its successors or assigns, forever; and we do hereby bind ourselves, our heirs, executors and administrators, to warrant and forever defend all and singular the said premises unto said City of Austin, its successors and assigns, against every person whomsoever lawfully claiming or to claim the same or any part thereof; provided, that, under this warranty, the vendors shall pay and be liable for the taxes on the land and premises herein conveyed, only for the years preceding 1928 and including the proportion of taxes for the year 1928, that the elapsedportion

AFD 3 Water Tap Record

WATER SERVICE PERMIT
Austin, Texas

E Nº 10871

INDEXED

Received of CITY OF AUSTIN FIRE STA Date 9-17-56
Address 201 WEST 30th
Amount FORTY AND 40/100 $40.00
Plumber M.S. BROUGHER Size of Tap 1½"

Date of Connection 9-13-56
Size of Tap Made 1½"
Size Service Made 1½"
Size Main Tapped 6"
From Front Prop. Line to Curb Cock 7.5'
From W Prop. Line to Curb Cock 4.2'
Location of Meter OVER
Type of Box LOW
Depth of Main in St. 3'
Depth of Service Line 3'
From Curb Cock to Tap on Main over main
Checked by Engr. Dept. 10-15-56 G.C.

No. Fittings	Size
1 Corp. Cock	1½"
1 Elbow	1½" COR
St. Elbow	
Bushing	
Reducer	
2 Pipe	4 1½" COR
Lead Comp.	
2 Nipples	1½" x 3"
Union	
1 Plug	TUB
1 Tee	"
Stop	
1 Box	LOW
1 Lid	"
1 Valves	1½"
Job No.	W 323-502
Req. No.	108616

INDEXED

B

AFD 3 Wastewater Tap Record

SANITARY SEWER SERVICE PERMIT No. 37475A

Austin, Texas

Received of Brougher Date 8/17/1956

Address 201 W. 30th.

Amount $

Builder or Owner City of Austin fire Hall Plumber

Lot 10 Block 4 Subdivision Plat No. 64

Date of Connection 8/24/1956

By City 37' S/ N. PL

By Plumber

Checked By Barr

Size Main 16" Depth 4.5'

Main Assign. in ease, in St.
on E. side ease, 29' E/W. PL of Cedar St.

Stub Depth Prop. Line 3½'

Stub Location

Book No. A-389

Paving Cut No.

No.	Fittings	Size	Price
3'	Pipe	6" con	.60
	Pipe		
1	Wyes	6x6	2.10
1	Bends		1.10
	Reducers		
	Plugs		
	Sand		
	Gravel		
	Remix		
	Stoppers		
	Castings		
	Other	1 tap	1.10
	truck		1.50
	Labor: foreman		1.47

AFD 3 Flood Profiles

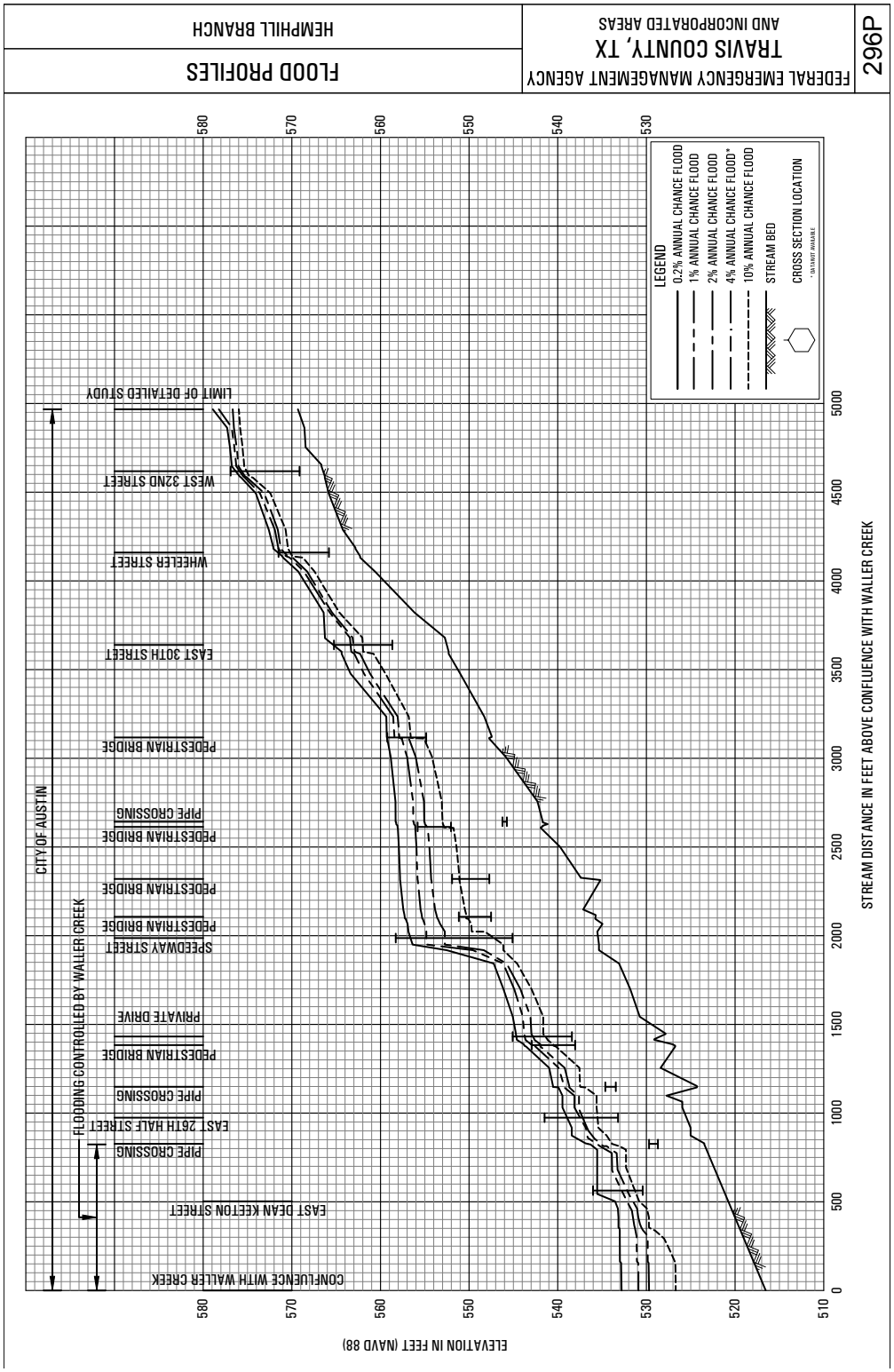

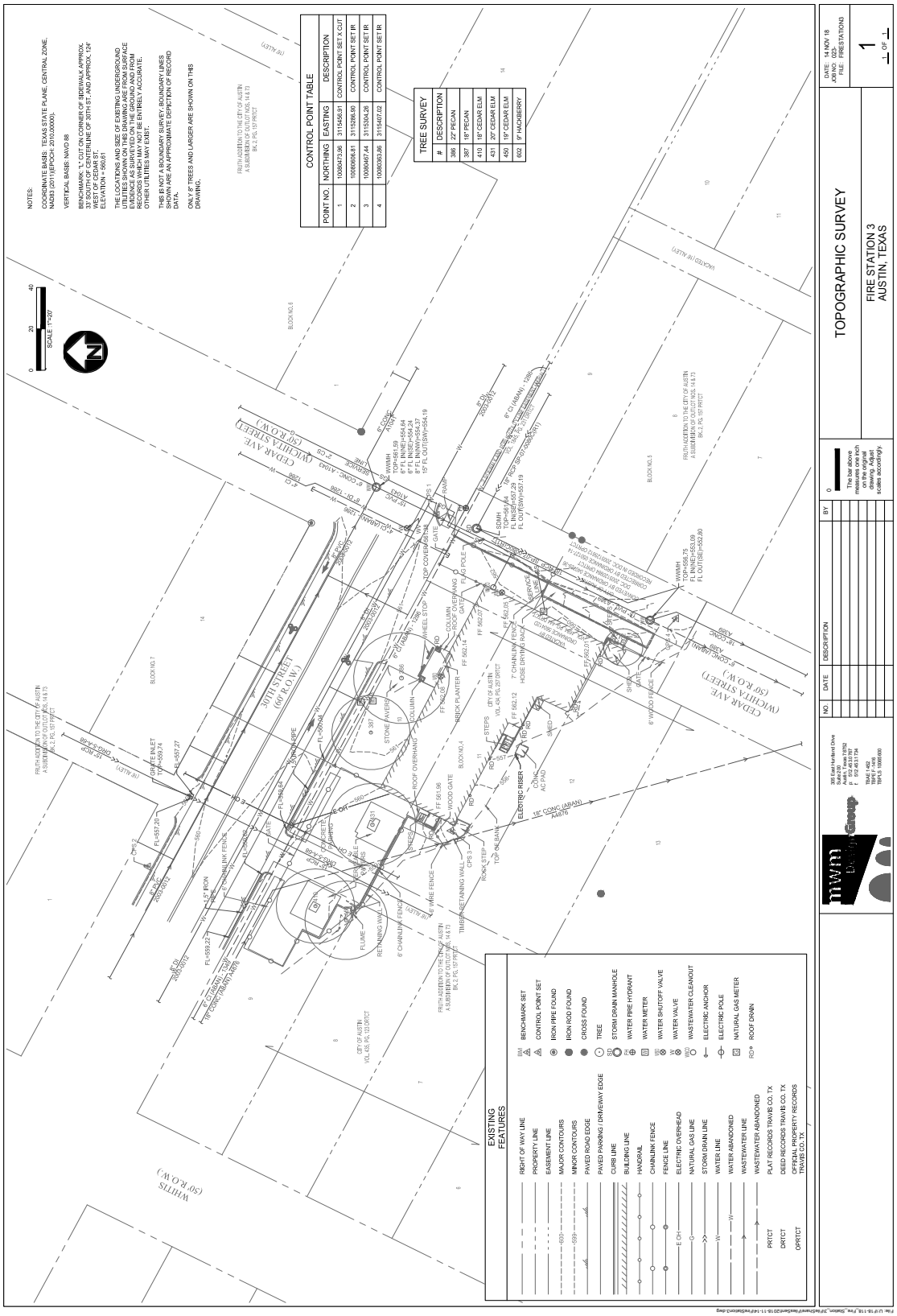
NOTES:
COORDINATE BASIS: TEXAS STATE PLANE, CENTRAL ZONE, NAD83 (2011)(EPOCH 2010.00000).
VERTICAL BASIS: NAVD 88
BENCHMARK: "L" CUT ON CORNER OF SIDEWALK APPROX. 33' SOUTH OF CENTERLINE OF 30TH ST. AND APPROX. 124' WEST OF CEDAR ST.
ELEVATION = 560.61
THE LOCATIONS AND SIZE OF EXISTING UNDERGROUND UTILITIES SHOWN ON THIS DRAWING ARE FROM SURFACE EVIDENCE AS SURVEYED ON THE GROUND AND FROM RECORDS OF THE CITY OF AUSTIN. ACCURATE OTHER UTILITIES MAY EXIST.
THIS IS NOT A BOUNDARY SURVEY. BOUNDARY LINES SHOWN ARE AN APPROXIMATE DEPICTION OF RECORD DATA.
ONLY 8" TREES AND LARGER ARE SHOWN ON THIS DRAWING.
CONTROL POINT TABLE
POINT NO. | NORTHING | EASTING | DESCRIPTION
1 | 10080473.96 | 3115456.91 | CONTROL POINT SET X CUT
2 | 10080605.81 | 3115286.60 | CONTROL POINT SET IR
3 | 10080467.44 | 3115304.26 | CONTROL POINT SET IR
4 | 10080365.06 | 3115407.02 | CONTROL POINT SET IR
TREE SURVEY
| DESCRIPTION
386 | 22" PECAN
387 | 18" PECAN
410 | 18" CEDAR ELM
431 | 20" CEDAR ELM
450 | 18" CEDAR ELM
602 | 9" HACKBERRY
EXISTING FEATURES
RIGHT OF WAY LINE
PROPERTY LINE
EASEMENT LINE
MAJOR CONTOURS
MINOR CONTOURS
PAVED ROAD EDGE
PAVED PARKING / DRIVEWAY EDGE
CURB LINE
BUILDING LINE
HANDRAIL
CHAINLINK FENCE
FENCE LINE
ELECTRIC OVERHEAD
NATURAL GAS LINE
STORM DRAIN LINE
WATER LINE
WATER ABANDONED
WASTEWATER LINE
WASTEWATER ABANDONED
PRTCT PLAT RECORDS TRAVIS CO., TX
DRTCT DEED RECORDS TRAVIS CO., TX
OPRTCT OFFICIAL PROPERTY RECORDS TRAVIS CO. TX
BM BENCHMARK SET
CP CONTROL POINT SET
IP IRON PIPE FOUND
IR IRON ROD FOUND
CF CROSS FOUND
TREE
SD STORM DRAIN MANHOLE
FH WATER FIRE HYDRANT
WM WATER METER
WV WATER SHUTOFF VALVE
WV WATER VALVE
WO WASTEWATER CLEANOUT
EA ELECTRIC ANCHOR
EP ELECTRIC POLE
GM NATURAL GAS METER
RD ROOF DRAIN
SCALE 1"=20'
0 20 40
NO. DATE DESCRIPTION BY
This bar above measures one inch on the original drawing. Adjust scales accordingly.
TOPOGRAPHIC SURVEY
FIRE STATION 3
AUSTIN, TEXAS
DATE: 14 NOV 18
JOB NO. 023-
FILE: FIRESTATIONS
1
1 OF 1

AFD 22 / EMS 12 Deed

E-1563

2.50

WARRANTY DEED

THE STATE OF TEXAS JUL 25-73 8659 * 2.50

KNOW ALL MEN BY THESE PRESENTS:

COUNTY OF TRAVIS

82-2545

That CENTRAL TEXAS EQUIPMENT COMPANY, of Travis County, State of Texas, acting herein by and through its duly authorized representatives, hereinafter referred to as Grantors, whether one or more, for and in consideration of the sum of TEN DOLLARS ($10.00) and other good and valuable consideration, to Grantors in hand paid by the City of Austin, Texas, the receipt and sufficiency of which is hereby acknowledged and confessed, and for which no lien, expressed or implied, is retained, have this day Granted, Sold and Conveyed, and by these presents do hereby Grant, Sell and Convey, unto the said City of Austin, a municipal corporation situated in Travis County, Texas, the following described property, to-wit:

BEING 1.72 ACRES OF LAND OUT OF THE SANTIAGO DEL VALLE GRANT IN TRAVIS COUNTY, TEXAS, A PART OF THAT CERTAIN 118.61 ACRE TRACT CONVEYED TO L. C. DURE, TRUSTEE, BY DEED RECORDED IN VOLUME 2173, PAGE 107 OF THE DEED RECORDS OF TRAVIS COUNTY TEXAS; AND BEING MORE PARTICULARLY DESCRIBED BY METES AND BOUNDS AS FOLLOWS:

BEGINNING at an iron stake in the South Right of Way line of East Riverside Drive at the Northwest corner of that certain 118.61 acre tract conveyed to L. C. Dure, Trustee, by deed recorded in Volume 2173, Page 107 of the Deed Records of Travis County, Texas, and the Northeast corner of that certain tract out of Riverside Farms, according to the map or plat of said subdivision recorded in Book 713, Page 93 of the Deed Records of Travis County, Texas, as conveyed to Joe Heffington, Trustee, by deed recorded in Volume 4235, Page 1783 of the Travis County Deed Records, for the Northwest corner of the tract herein described;

THENCE with the South line of East Riverside and the North line of the said Dure 118.61 acre tract with the courses and distances as follows: S 59° 58' E 41.52 ft., S 59° 18' E 108.48 ft. to an iron stake at a corner of that certain tract conveyed to Joe Heffington, Trustee, by deed recorded in Volume 4099, Page 2079 of the Deed Records of Travis County, Texas, for the Northeast corner of this tract;

THENCE with the West line of the said Heffington tract, S 28° 17' W 500.61 ft. to an iron stake at a corner of the said Heffington tract, for the Southeast corner of this tract;

THENCE, with the North line of the said Heffington tract, N 59° 18' W 150.0 ft. to an iron stake in fence, for the Southwest corner of this tract and the East line of the said Riverside Farms;

THENCE, with the East line of Riverside Farms, being also the East line of the said tract conveyed to Joe Heffington, Trustee, N 28° 17' E 500.28 ft. to the PLACE OF BEGINNING, containing 75,046.392 square feet or 1.72 acres of land.

DEED RECORDS
Travis County, Texas

4686 2324

TO HAVE AND TO HOLD the above described premises, together with all and singular the rights and appurtenances thereto in anywise belonging unto the said City of Austin, its successors and assigns forever; and Grantors, whether one or more, do hereby bind ourselves, our heirs, executors, administrators, successors and assigns to warrant and forever defend all and singular the said premises unto the said City of Austin, its successors and assigns, against every person whomsoever lawfully claiming or to claim the same or any part thereof.

IN WITNESS WHEREOF, Grantors have caused this instrument to be executed on this 20th day of July, 1973.

82-2546

CENTRAL TEXAS EQUIPMENT CO.

(CORPORATE SEAL)

By H. C. Bell Jr., Pres.

ATTEST:

Hal H. Bell, Secy. Treas.

THE STATE OF TEXAS)
COUNTY OF TRAVIS)

BEFORE ME, the undersigned authority, a Notary Public in and for said County and State, on this day personally appeared H. C. Bell, Jr., known to be the person whose name is subscribed to the foregoing instrument as President of CENTRAL TEXAS EQUIPMENT CO., and acknowledged to me that he executed the same in such capacity as the act and deed of said company for the purposes and consideration therein expressed.

GIVEN UNDER MY HAND AND SEAL OF OFFICE, this the 20th day of July, 1973.

NOTARY SEAL

Vernell Fielscher
Notary Public in and for Travis County, Texas

19JULY73
djw

4686 2325

82-2547

FILED
JUL 25 8 42 AM '73
Doris Shuspeline
COUNTY CLERK
TRAVIS COUNTY, TEXAS

STATE OF TEXAS COUNTY OF TRAVIS

I hereby certify that this Instrument was FILED on the date and at the time stamped hereon by me; and was duly RECORDED, in the Volume and Page of the named RECORDS of Travis County, Texas, as Stamped hereon by me, on

JUL 25 1973

COUNTY COURT OF TRAVIS COUNTY, TEXAS

Doris Shuspeline
COUNTY CLERK
TRAVIS COUNTY, TEXAS

4686 2326

AFD 22 / EMS 12 Water Tap Record

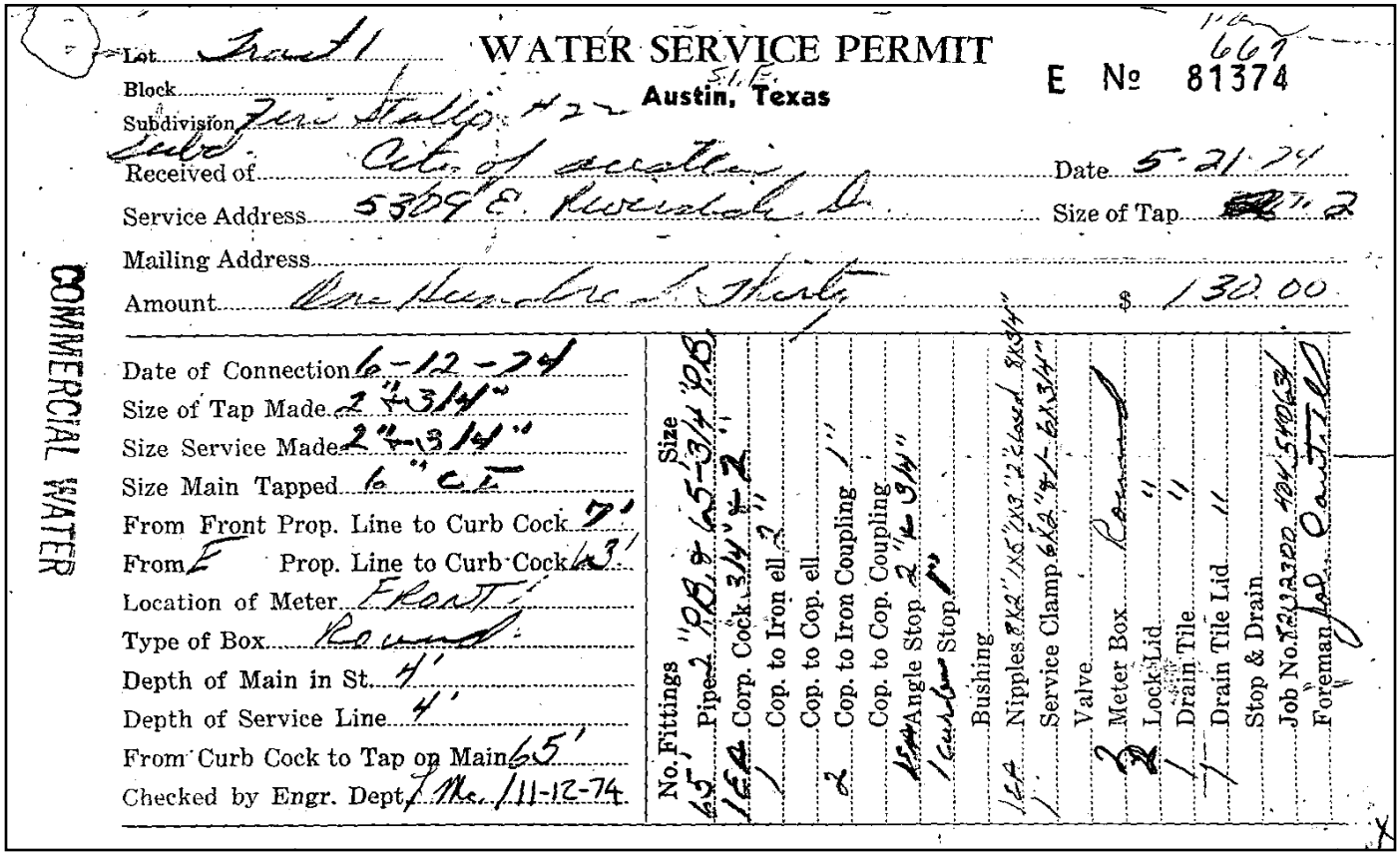

WATER SERVICE PERMIT

Austin, Texas

E № 81374

Lot: Tract 1
Block:
Subdivision: Fire Station #22 Subd.
Received of: City of Austin
Date: 5-21-74
Service Address: 5309 E. Riverside Dr.
Size of Tap: 2"
Mailing Address:
Amount: One Hundred Thirty $ 130.00

COMMERCIAL WATER

Date of Connection: 6-12-74
Size of Tap Made: 2" & 3/4"
Size Service Made: 2" & 3/4"
Size Main Tapped: 6" CI
From Front Prop. Line to Curb Cock: 7'
From F Prop. Line to Curb Cock: 13'
Location of Meter: Front
Type of Box: Round
Depth of Main in St.: 4'
Depth of Service Line: 4'
From Curb Cock to Tap on Main: 65'
Checked by Engr. Dept.: J. Mc. 11-12-74

No.	Fittings	Size
65'	Pipe	2" PDB & 3/4" PDB
1 ea	Corp. Cock	3/4" & 2"
1	Cop. to Iron ell	2"
	Cop. to Cop. ell	
2	Cop. to Iron Coupling	1"
	Cop. to Cop. Coupling	
1 ea	Angle Stop	2" & 3/4"
1 ea	Stop	"
	Bushing	
1 ea	Nipples	8"x2" 1"x5" 2"x3" 2" Closed 8"x3/4"
1	Service Clamp	6"x2" & 6"x3/4"
	Valve	
2	Meter Box	Round
2	Lock Lid	"
1	Drain Tile	"
1	Drain Tile Lid	"
	Stop & Drain	
	Job No.	F2U12120 4014 54063
	Foreman	Joe Cantrell

AFD 22 / EMS 12 Existing Site Plan

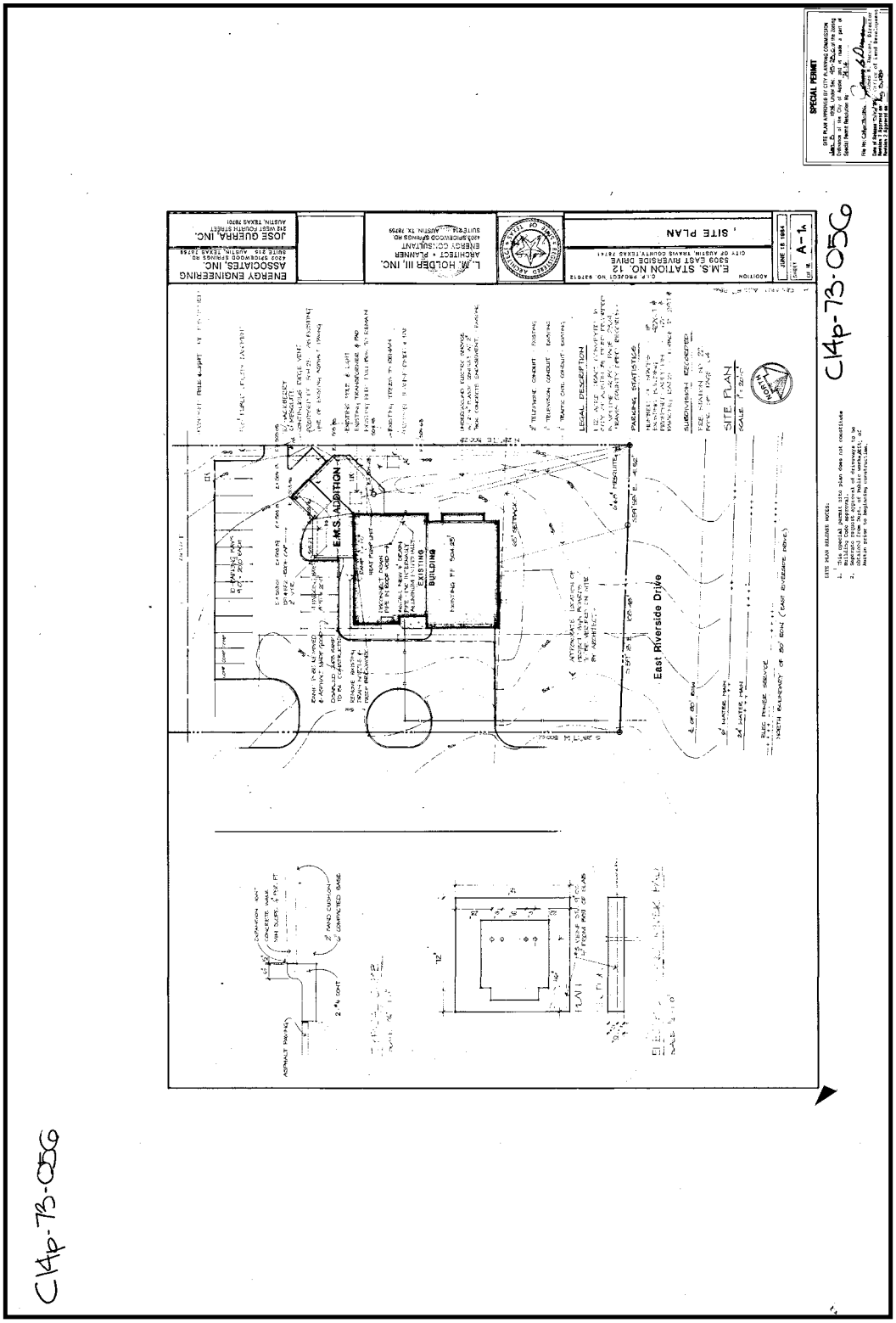

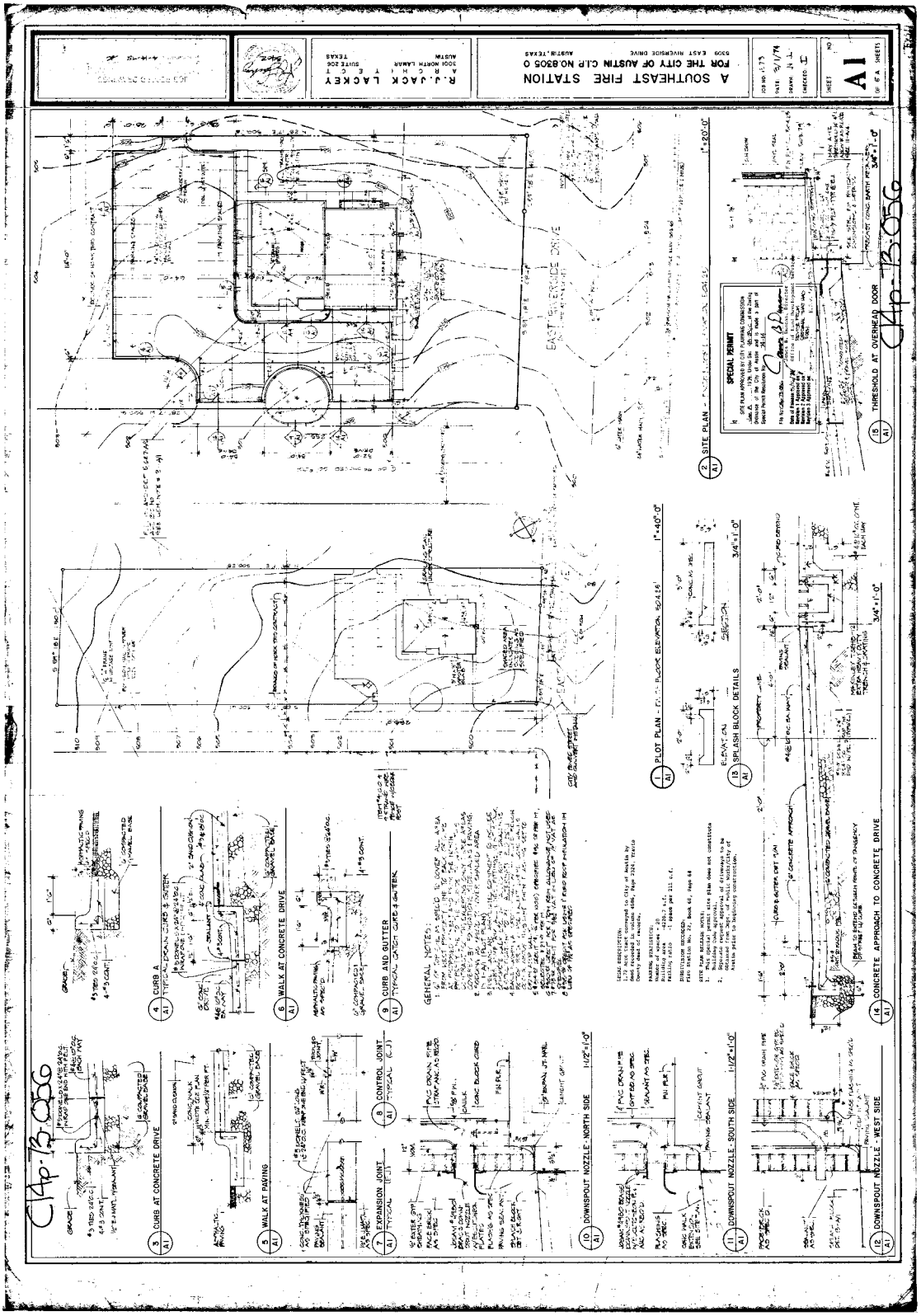
A SOUTHEAST FIRE STATION
FOR THE CITY OF AUSTIN C.I.P. NO.8305 O
5309 EAST RIVERSIDE DRIVE AUSTIN, TEXAS
R.J. JACK LACKEY
ARCHITECT
3001 NORTH LAMAR SUITE 206
AUSTIN TEXAS
A1
SITE PLAN
EAST RIVERSIDE DRIVE
SPECIAL PERMIT
CURB A
CURB AT CONCRETE DRIVE
WALK AT CONCRETE DRIVE
WALK AT PAVING
CURB AND GUTTER
EXPANSION JOINT
CONTROL JOINT
DOWNSPOUT NOZZLE - NORTH SIDE
DOWNSPOUT NOZZLE - SOUTH SIDE
DOWNSPOUT NOZZLE - WEST SIDE
PLOT PLAN
SPLASH BLOCK DETAILS
CONCRETE APPROACH TO CONCRETE DRIVE
THRESHOLD AT OVERHEAD DOOR
GENERAL NOTES:
Clp-13-056

Addition to EMS 12 Documents

CITY OF AUSTIN E.M.S. DEPARTMENT

15 Waller 469-2034

CITY OF AUSTIN FOUNDED 1839

C3 Seal is Only for C3.

ADDITION TO E.M.S. STATION NO. 12

5309 East Riverside Drive Austin, Texas 78741

C.I.P. NUMBER 803-937-0110

~~PLANNING COMMISSION SITE PLAN~~

Submitted: JULY 17, 1997

LOCATION MAP

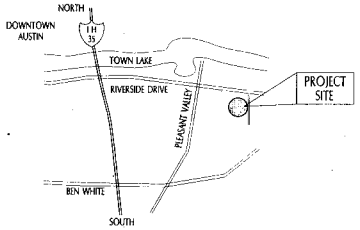

DEVELOPER INFORMATION

CITY OF AUSTIN DEPARTMENT OF PUBLIC WORKS

MARIA GUERRA

505 Barton Springs Austin, Texas 78767 — Architect/Project Manager — (512) 499-7135 FAX: 499-7239

DESIGN PROFESSIONALS

ARCHITECT
THE AUSTIN GROUP
3018 North Lamar Boulevard, Suite 200
Austin, Texas 78705
(512) 323-6666
FAX: 323-5236

ASSOCIATE ARCHITECT
ARCHITECTURE + PLUS
1907 North Lamar Boulevard, Suite 260
Austin, Texas 78705
(512) 478-0970
FAX: 478-0920

CIVIL/STRUCTURAL ENGINEER
WAY ENGINEERS, INC.
11615 Angus Road, Suite 104
Austin, Texas 78759
(512) 343-0766
FAX: 343-9103

M.E.P. ENGINEER
HMG & ASSOCIATES
3508 Far West Boulevard, Suite 350
Austin, Texas 78731
(512) 794-8234
FAX: 794-8239

SITE INFORMATION

WATERSHED : COUNTRY CLUB

CLASSIFICATION : SUBURBAN

SITE IS NOT WITHIN THE 100 YEAR FLOODPLAIN PER FEMA MAP PANEL 170E (JUNE 16, 1993).

SITE IS NOT OVER THE EDWARDS AQUIFER RECHARGE ZONE PER THE CITY OF AUSTIN A.R.Z. MAP.

LEGAL DESCRIPTION : TRACT 1, FIRE STATION NO. 22 SUBDIVISION, A SUBDIVISION IN THE CITY OF AUSTIN AS RECORDED IN PLAT BOOK 68, PAGE 64 OF TRAVIS COUNTY, TX PLAT RECORDS.

RELATED CASE NO. : C14P-73-056

NOTES

Ordinance Requirements

1. All improvements shall be made in accordance with the released site plan. Any additional improvements will require a site plan amendment and approval from the Planning and Development; minor corrections may be approved by the Building Plan Review Section at the time of building permit.
2. Approval of this site plan does not include Building Code and Fire Code approval nor building permit approval.
3. All signs must comply with the requirements of the Sign and Land Development Code.
4. The owner is responsible for all cost of relocation, or damage to, utilities.
5. Additional electric easements may be required at a later date.
6. A Development Permit must be issued prior to an application for building permit for non-consolidated or Planning Commission approved site plans.

Compatibility

1. Highly reflective materials will not be used. Materials may not exceed 20% reflectivity. This requirement shall not apply to solar panels or to copper or painted metal roofs.
2. The noise level of mechanical equipment will not exceed 70 dba at the property line adjacent to residential uses.
3. All exterior lighting shall be hooded or shielded from the view of adjacent residential property.
4. Exterior lighting above the second floor is prohibited when adjacent to residential property.
5. All dumpsters and any permanently placed refuse receptacles will be located at a minimum of twenty (20) feet from a property used or zoned as SF-5 or more restrictive.

Fire Department

1. The Austin Fire Department requires asphalt or concrete pavement prior to construction as an "all-weather driving surface".
2. Hydrants must be installed with the center of the four-inch opening at least 18 inches above finished grade. The four-inch opening must face the driveway or street with three- to six-foot setbacks from the curbline(s). No obstruction is allowed within three feet of any hydrant and the four-inch opening must be totally unobstructed from the street.
3. TIMING OF INSTALLATION: When fire protection facilities are installed by the developer, such facilities shall include all surface access roads which shall be installed and made serviceable prior to and during the time of construction. Where alternative methods of protection, as approved by the Fire Chief, are provided, the above may be modified or waived.
4. All pervious/decorative paving shall be engineered and installed for 80,000 lb. fire-vehicle loads. Any pervious/decorative paving within 100 feet of any building must be approved by the Fire Department.
5. Commercial dumpsters and containers with an individual capacity of 15 cubic yards or greater shall be stored or placed within ten feet of openings, combustible walls, or combustible eave lines.
6. Fire lanes designated on site plan shall be registered with City of Austin Fire Marshal's office and inspected for final approval.
7. Vertical clearance required for fire apparatus is 13 feet, 6 inches for full width of access drive.

AMERICANS WITH DISABILITIES ACT

The City of Austin has reviewed this plan for compliance with City development regulations only. The applicant, property owner, and occupant of the premises are responsible for determining whether the plan complies with all other laws, regulations, and restrictions which may be applicable to the property and its use.

REVISION/CORRECTION TABLE

No.	Description	Sheet(s) Affected	Total # Sheets in Plan Set	Net Change Impervious Cover (sq. ft.)	Total Site Impervious Cover (sq. ft.)	City of Austin Approval/Date	Date Inspect
C1	MOVED DETENTION POND WALL (WHICH WAS) BACK FROM CURB TO PROPERTY LINE	2 of 5 4 of 5	5	Neat	N/A	3/27/98	
C2	CONSTRUCT T-MOBILE WIRELESS TELECOMMUNICATION FACILITY (SEE SP-99-1496CS)	3 of 5 4 of 5 5 of 5	5	205	32,011	10/24/05	
C3	Construct New Women's Locker Room	2 of 5 3 of 5 5 of 5	5	-39	31,782	11-18-10	

INDEX OF DRAWINGS

1 COVER SHEET
2 PREVIOUSLY APPROVED SITE PLAN
3 DRAINAGE, GRADING E/S CONTROL & TREE PROTECTION PLAN
4 GENERAL NOTES AND CONSTRUCTION DETAILS
5 SITE AND LANDSCAPE PLAN \ LANDSCAPE CALCULATIONS \ SITE DETAILS

ALL RESPONSIBILITY FOR THE ADEQUACY OF THESE PLANS REMAINS WITH THE ENGINEER WHO PREPARED THEM. IN APPROVING THESE PLANS, THE CITY OF AUSTIN MUST RELY UPON THE ADEQUACY OF THE WORK OF THE DESIGN ENGINEER.

REVIEWED BY: 12/15/97
DEPARTMENT OF PLANNING AND DEVELOPMENT — DATE

DEVELOPMENT PERMIT NUMBER: SP-97-0268CS

SITE PLAN RELEASE Sheet 1 of 5

FILE NUMBER: SP-97-0268CS EXPIRATION DATE: 12-15-2000
CASE MANAGER: J. Hensley APPLICATION DATE: 7-17-97
APPROVED ADMINISTRATIVELY ON: 12-15-97
APPROVED BY PLANNING COMMISSION ON: —
APPROVED BY CITY COUNCIL ON: —
under Section 6-4-2 of Chapter 13-1 of the Austin City Code.
Director, Development and Inspection Department
DATE OF RELEASE: 12-15-97 Review: P
Rev. 1 — Correction 1: 3/27/98
Rev. 2 — Correction 2: 10/24/05
Rev. 3 — Correction 3: 11-18-10

1 of 5

SP-97-0268CS

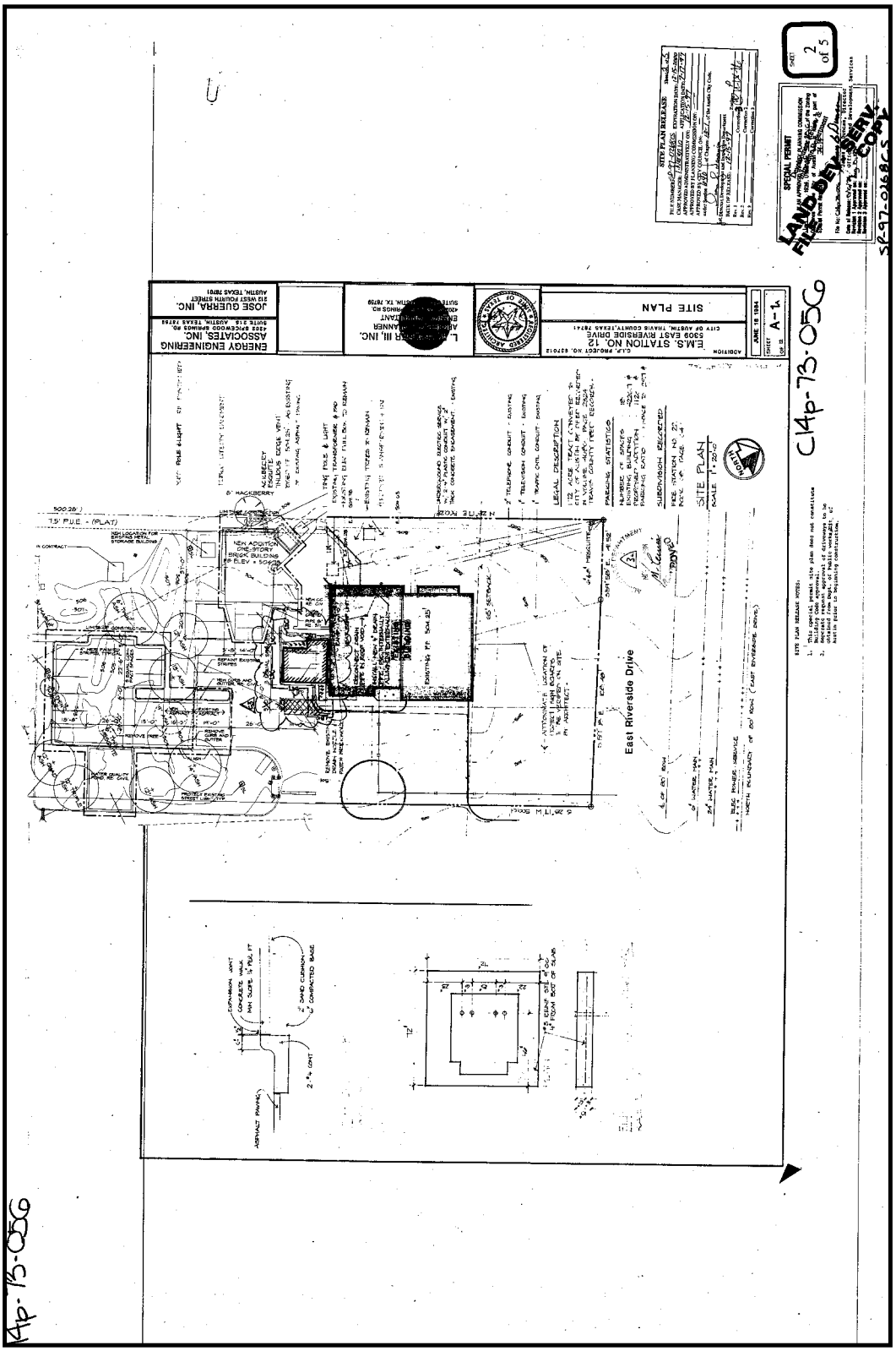
SITE PLAN
E.M.S. STATION NO. 12
5309 EAST RIVERSIDE DRIVE
CITY OF AUSTIN, TRAVIS COUNTY, TEXAS 78741
ENERGY ENGINEERING ASSOCIATES, INC.
JOSE GUERRA, INC.
East Riverside Drive
C14p-73-056
SP-97-0168CS
LAND DEV. SERV. COPY

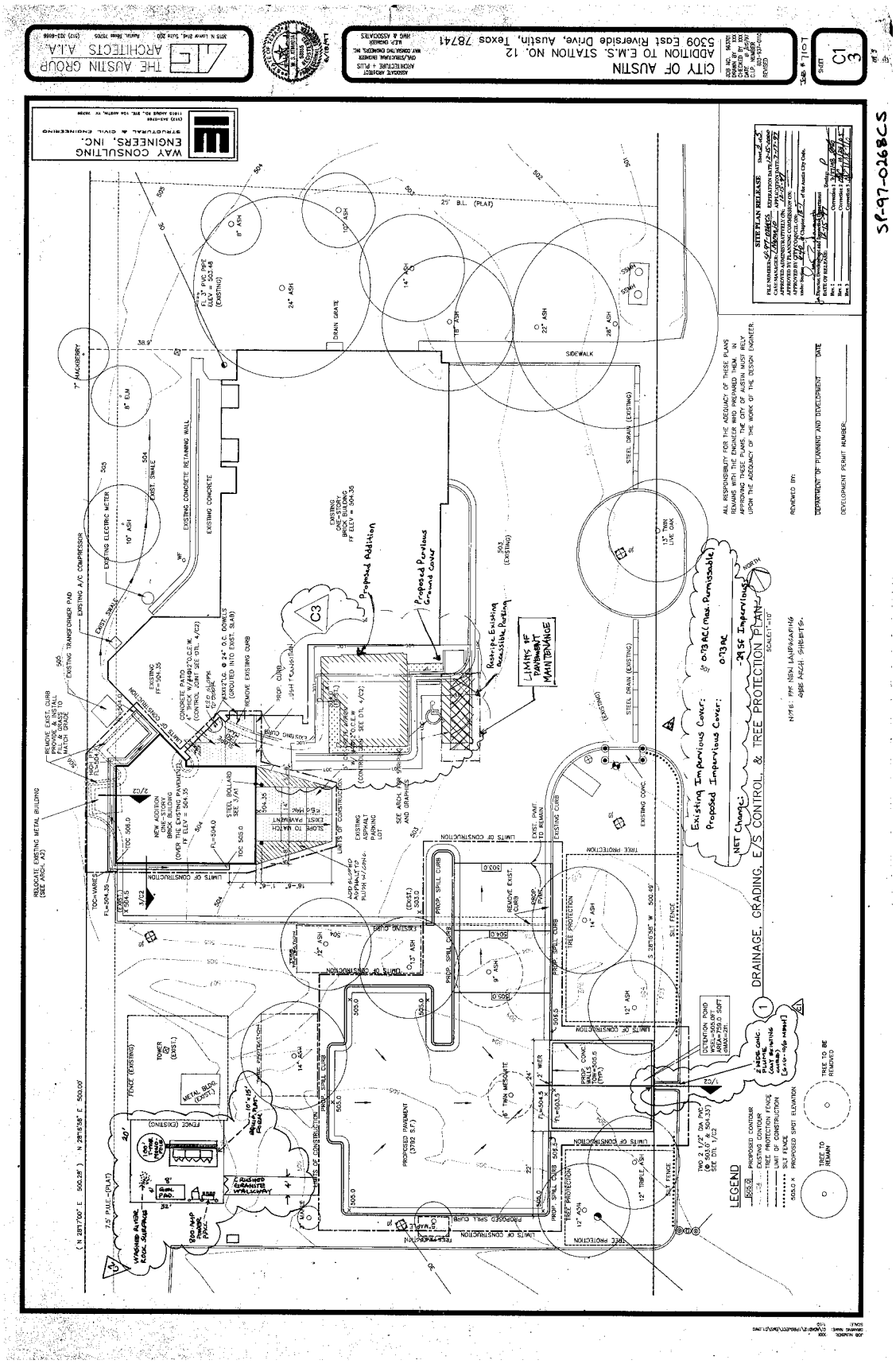
CITY OF AUSTIN
ADDITION TO E.M.S. STATION NO. 12
5309 East Riverside Drive, Austin, Texas 78741
THE AUSTIN GROUP
ARCHITECTS A.I.A.
WAY CONSULTING ENGINEERS, INC.
STRUCTURAL & CIVIL ENGINEERING
SITE PLAN RELEASE
DRAINAGE, GRADING, E/S CONTROL, & TREE PROTECTION PLAN
LEGEND
Proposed Addition
Proposed Pervious Ground Cover
LIMITS OF PAVEMENT MAINTENANCE
Existing Impervious Cover: 0.73 AC
Proposed Impervious Cover: 0.73 AC
NET Change: -29 SF Impervious
SP-97-0268CS

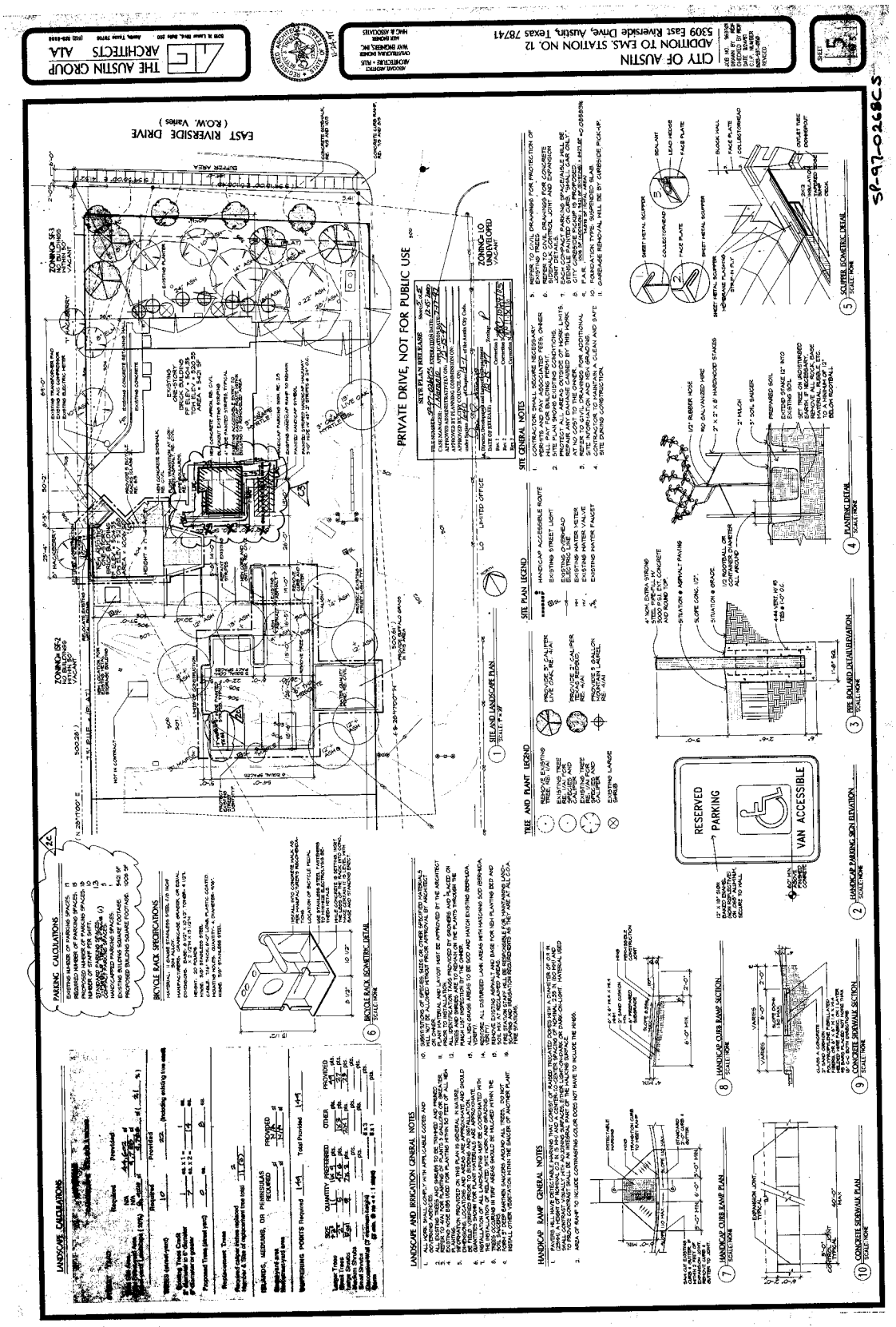
THE AUSTIN GROUP
ARCHITECTS AIA
CITY OF AUSTIN
ADDITION TO EMS. STATION NO. 12
5309 East Riverside Drive, Austin, Texas 78741
EAST RIVERSIDE DRIVE
(R.O.W. Varies)
PRIVATE DRIVE, NOT FOR PUBLIC USE
SITE PLAN LEGEND
SITE GENERAL NOTES
TREE AND PLANT LEGEND
SITE AND LANDSCAPE PLAN
PARKING CALCULATIONS
BICYCLE RACK SPECIFICATIONS
BICYCLE RACK ISOMETRIC DETAIL
LANDSCAPE CALCULATIONS
LANDSCAPE AND IRRIGATION GENERAL NOTES
HANDICAP RAMP GENERAL NOTES
HANDICAP CURB RAMP PLAN
HANDICAP CURB RAMP SECTION
CONCRETE SIDEWALK PLAN
CONCRETE SIDEWALK SECTION
HANDICAP PARKING SIGN ELEVATION
RESERVED PARKING
VAN ACCESSIBLE
PIPE BOLLARD DETAIL/ELEVATION
PLANTING DETAIL
SCUPPER GEOMETRIC DETAIL
SP-97-0268CS

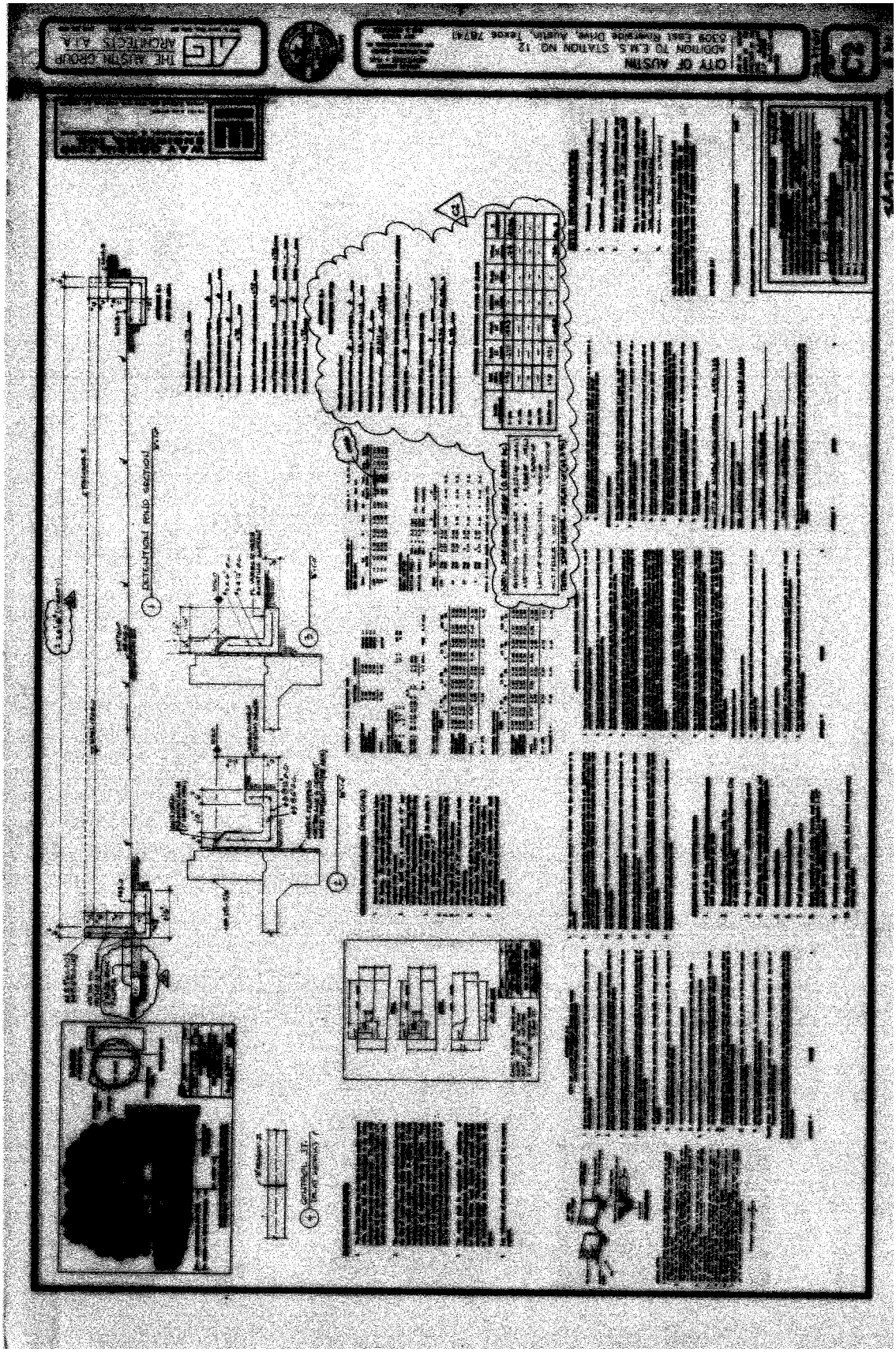
CITY OF AUSTIN
ADDITION TO E.M.S. STATION NO. 12
5309 East Riverside Drive, Austin, Texas 78741
THE AUSTIN GROUP
ARCHITECTS A.I.A.
EXTENTION ROAD SECTION

Architectural Exhibits

AFD 1 / EMS 6

1. **National Register of Historic Places - FAQs**

National Register of Historic Places

Because AFD 1 / EMS 6 became part of the National Park Service's National Register of Historic Places in May, 2000, we are including the following information from the National Park Service's website under "Frequently Asked Questions" via the following link:

https://www.nps.gov/subjects/nationalregister/frequently-asked-questions.htm

National Register of Historic Places

1. What is the National Register of Historic Places?

a. The National Park Service administers the National Register of Historic Places. The National Register is the official Federal list of districts, sites, buildings, structures, and objects significant in American history, architecture, archeology, engineering, and culture. National Register properties have significance to the history of their community state, or the nation. Nominations for listing historic properties come from State Historic Preservation Officers, from Federal Preservation Officers for properties owned or controlled by the United States Government, and from Tribal Historic Preservation Officers for properties on Tribal lands. Private individuals and organizations, local governments, and American Indian tribes often initiate this process and prepare the necessary documentation. A professional review board in each state considers each property proposed for listing and makes a recommendation on its eligibility. National Historic Landmarks are a separate designation, but upon designation, NHLs are listed in the National Register of Historic Places if not already listed.

2. What are the results of listing?

a. In addition to honorific recognition, listing in the National Register has the following results for historic properties:

1) Consideration in planning for Federal, Federally licensed, and Federally assisted projects: -- Section 106 of the National Historic Preservation Act of 1966 requires that Federal agencies allow the Advisory Council on Historic Preservation an opportunity to comment on all projects affecting historic properties either listed in or determined eligible for listing in the National Register. The Advisory Council oversees and ensures the consideration of historic properties in the Federal Planning process.

2) Eligibility for certain tax provisions -- Owners of properties listed in the National Register may be eligible for a 20% investment tax credit for the certified rehabilitation of income-producing certified historic structures such as commercial, industrial, or rental residential buildings. This credit can be combined with a straight-line depreciation period of 27.5 years for residential property and 31.5 years for nonresidential property for the depreciable basis of the rehabilitated building reduced by the amount of the tax credit claimed. Federal tax deductions are also available for charitable contributions for conservation purposes of partial interests in historically important land areas or structures.

3) Consideration of historic values in the decision to issue a surface mining permit where coal is located in accordance with the Surface Mining Control Act of 1977; and

4) Qualification for Federal grants for historic preservation, when funds are available.

3. What are the restrictions, rules, regulations for historic property owners?

a. Under Federal Law, the listing of a property in the National Register places no restrictions on what a non-federal owner may do with their property up to and including destruction, unless the property is involved in a project that receives Federal assistance, usually funding or licensing/permitting.

   http://www.nps.gov/nr/regulations.htm

b. There may be state or local preservation laws that a property owner should be aware of before they undertake a project with a historic property. We recommend you, or the property owner contact the State historic preservation office (SHPO) before an action with a listed property is taken. The SHPO is the state agency that oversees historic preservation efforts in their state. You can find contact information for the SHPOs at:

   https://www.nps.gov/subjects/nationalregister/state-historic-preservation-offices.htm

c. State Historic Preservation Officers (SHPO) play a critical role carrying out many responsibilities in historic preservation. Surveying, evaluating and nominating significant historic buildings, sites, structures, districts and objects to the National Register is one such key activity. To help find out if a historic place meets the National Register criteria and how the nomination process works in your state, contact the appropriate SHPO below for assistance.

   http://www.thc.texas.gov/

   http://www.thc.texas.gov/preserve/projects-and-programs/national-register-historic-places

d. If Federal monies are attached to the property then any changes to the property have to allow the Advisory Council on Historic Preservation (www.achp.gov) to comment on the project. You can also read a copy of the National Register of Historic Places code of Federal regulations at: http://www.nps.gov/nr/regulations.htm

4. How do I apply for grant money or tax credits?

a. The National Register of Historic Places does not have a grant program ourselves. However, Technical Preservation Services (a different program within the National Park Service) does have a tax credit program that may be of assistance to you. The website for the tax credit program is:

   https://www.nps.gov/tps/tax-incentives.htm

b. Additionally, sometimes State historic preservation offices may have state run programs that could help.

Structural Exhibits

AFD 1 / EMS 6

1. **AFD 1 / EMS 6 Level 1 Structural Grid**
2. **AFD 1 / EMS 6 Level 2 Structural Grid**
3. **AFD 1 / EMS 6 Roof Level Structural Grid**
4. **AFD 1 / EMS 6 Annex Foundation Plan & Details**

AFD 1 / EMS 6 Level 1 Structural Grid

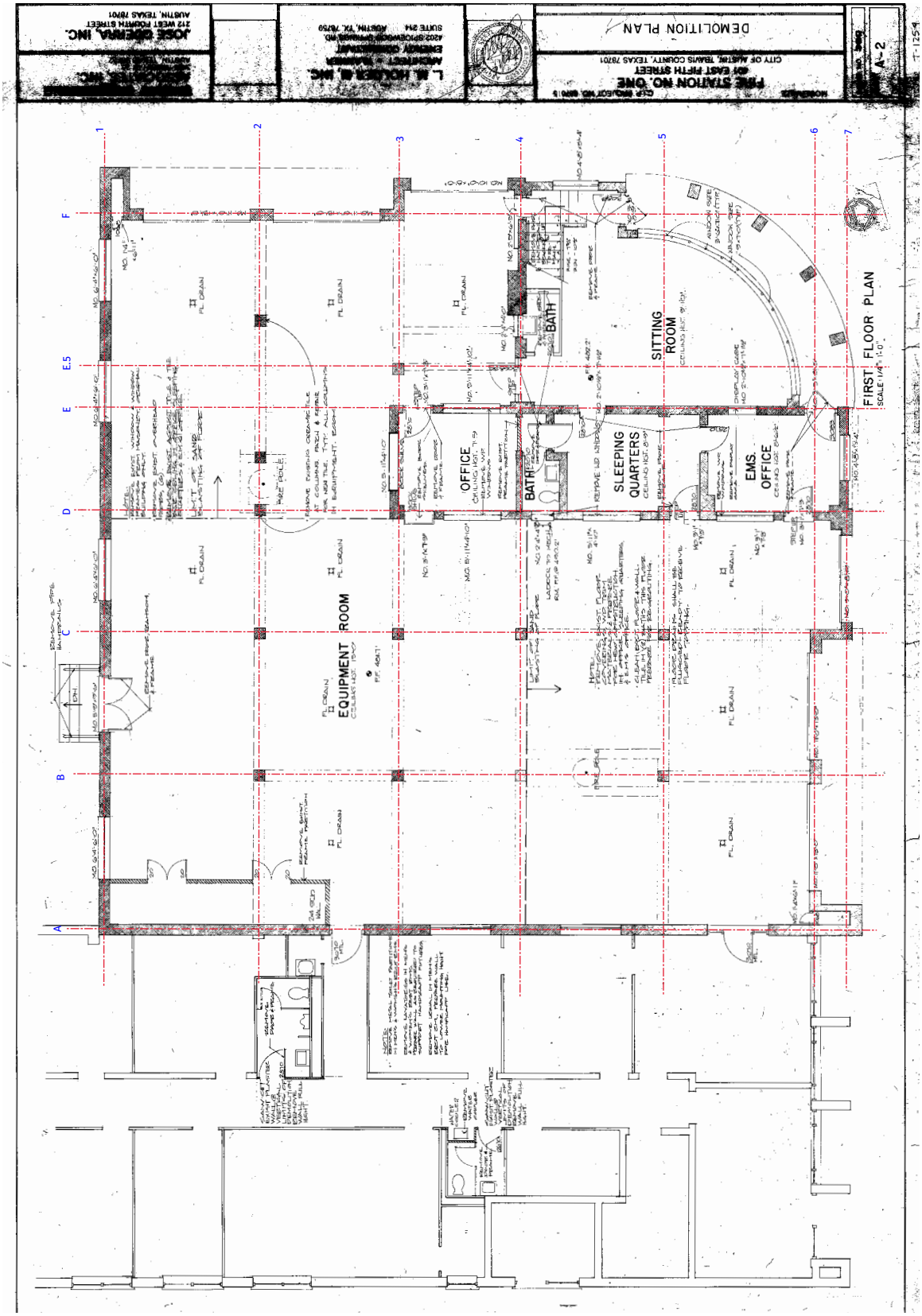

AFD 1 / EMS 6 Level 2 Structural Grid

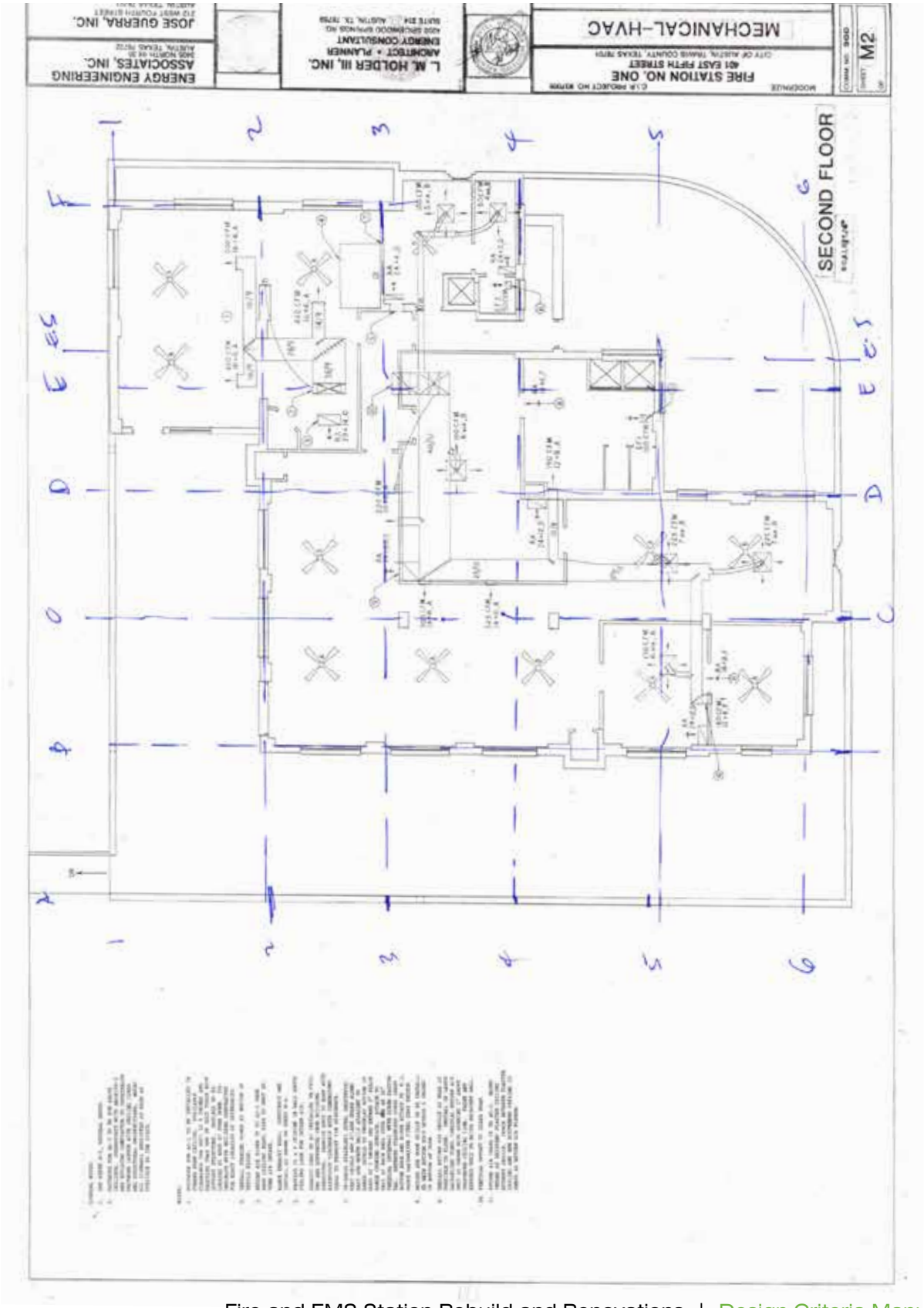

AFD 1 / EMS 6 Roof Level Structural Grid

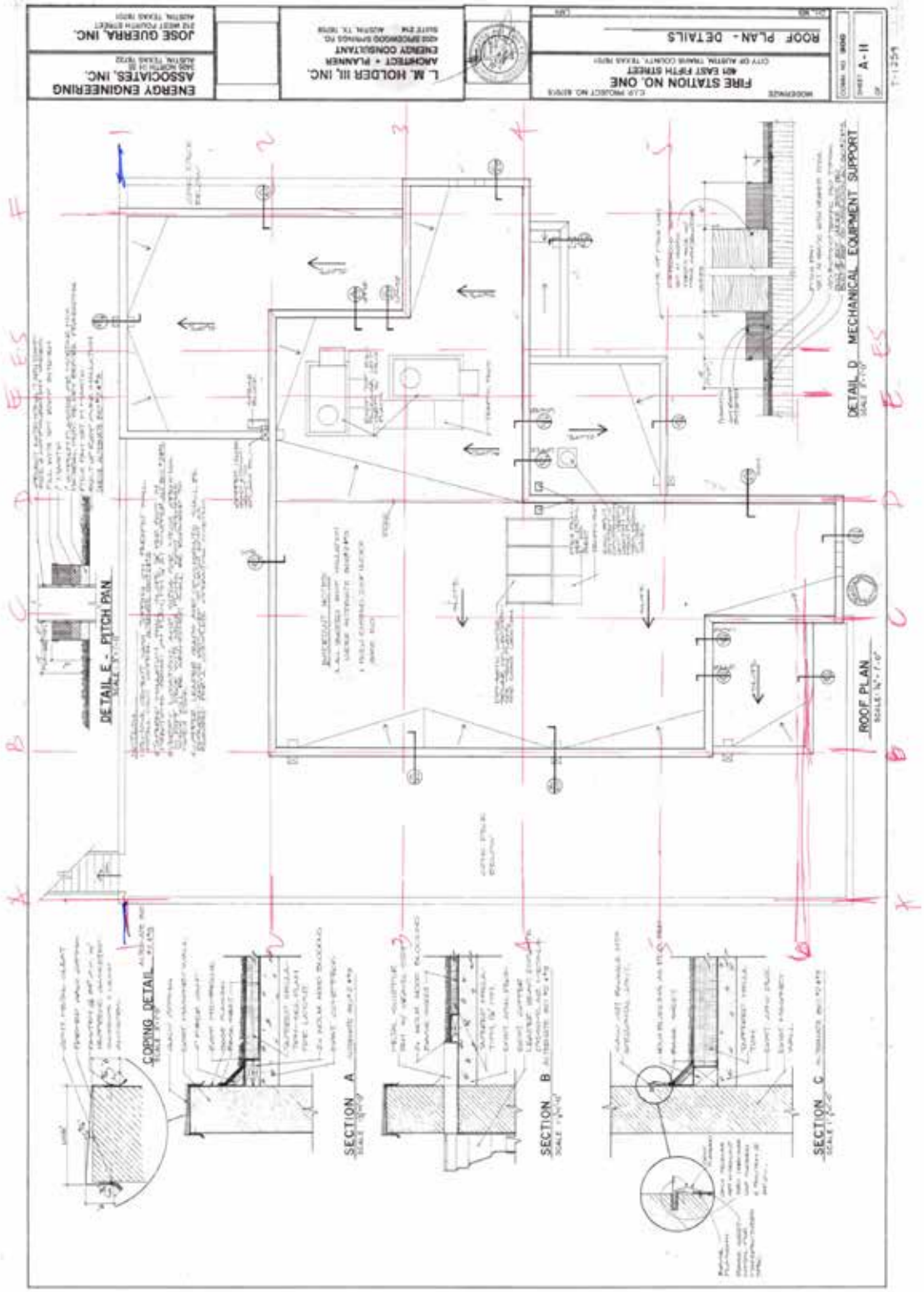

AFD 1/EMS 6 Annex Foundation Plan & Details

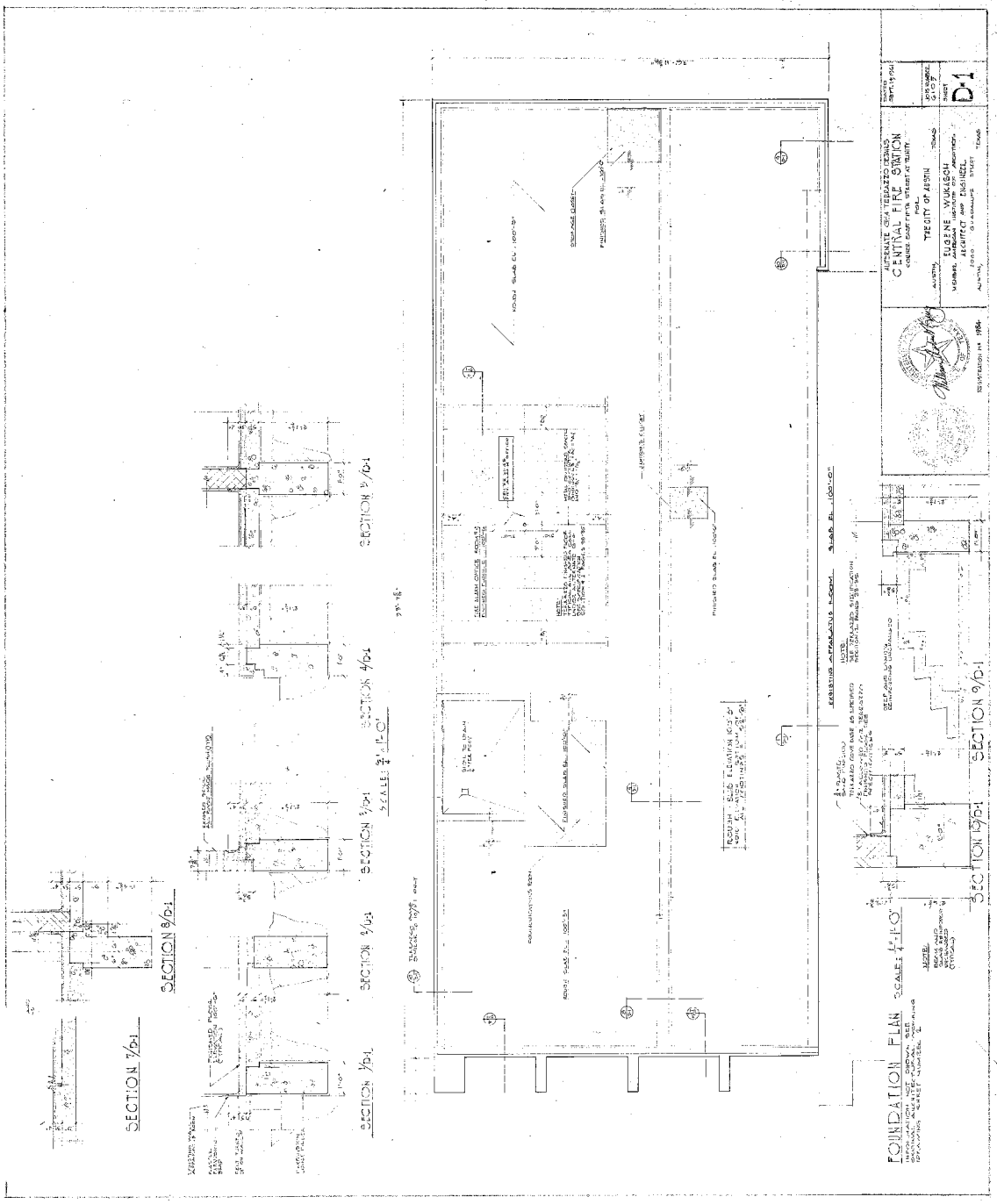

Communications Rooms

The following City of Austin telecommunication room prototypes are included in this Appendix:

1. **Station 24 - Door on End Wall**
2. **Station 26 - Door on Side Wall**

Station 24 - Door on End Wall

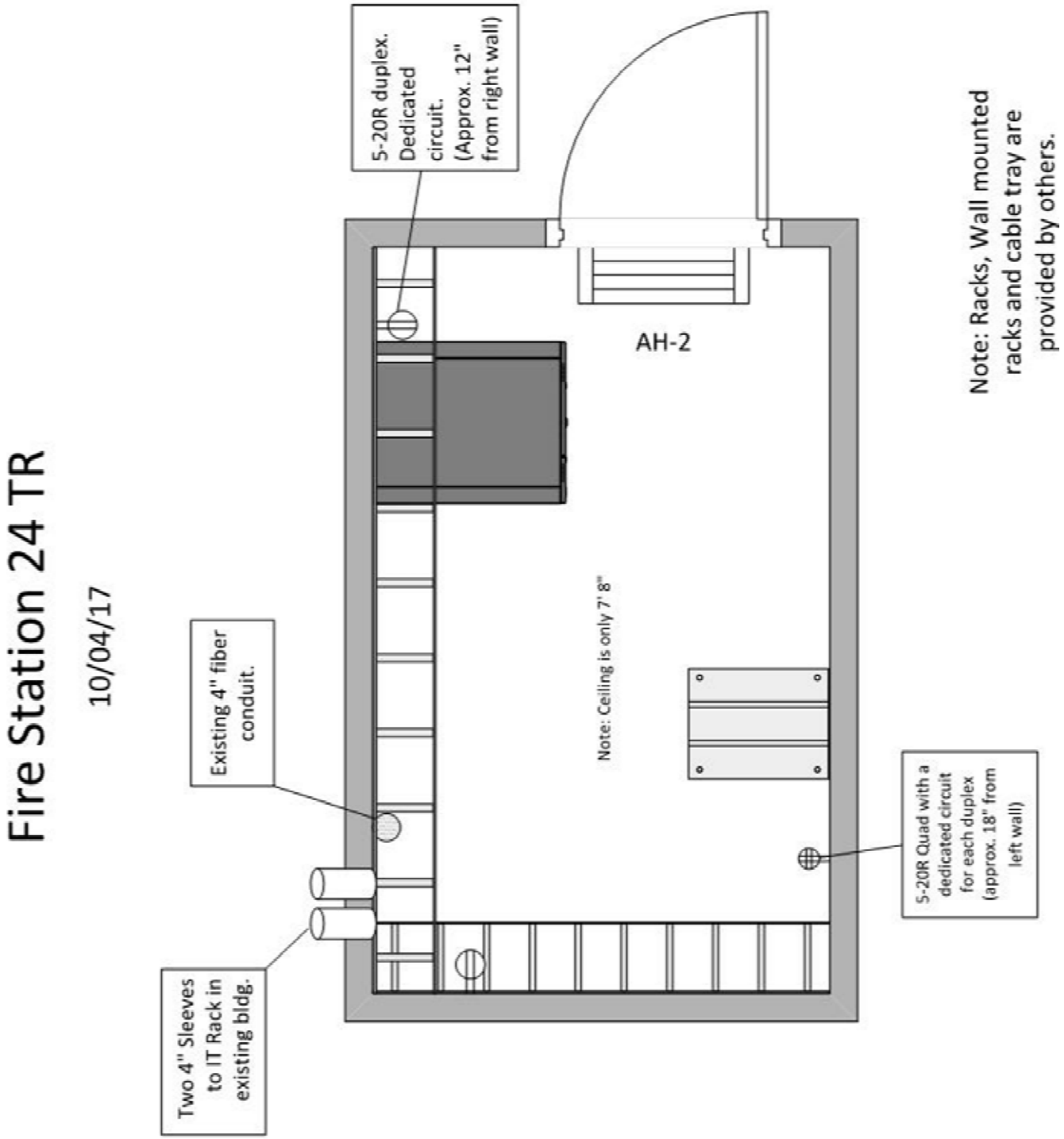

Station 26 - Door on Side Wall

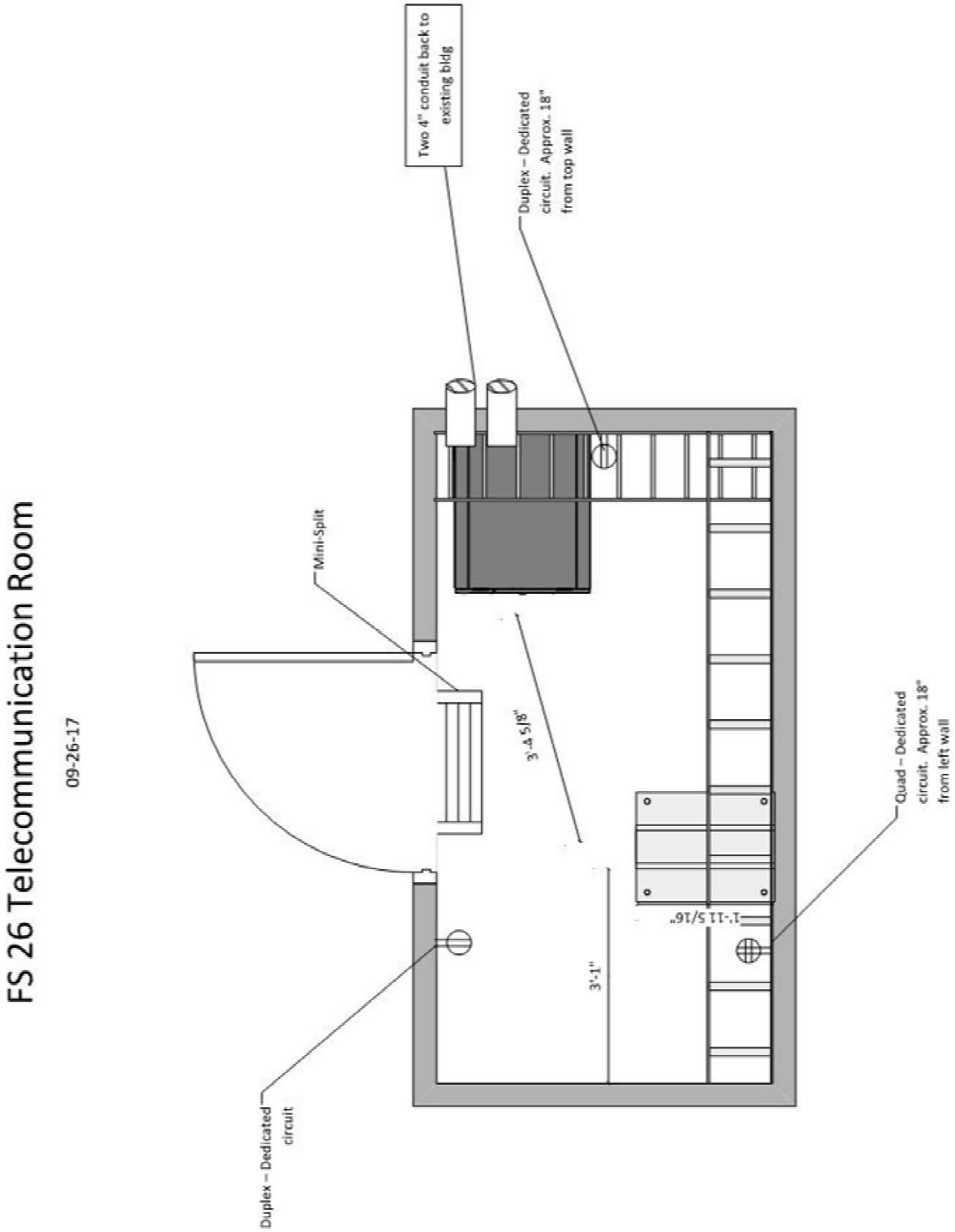

Prototype Programming

The following City of Austin Fire & EMS Station Design Prototype Programming documents are included in this Appendix:

1. **Fire & EMS Station Design Prototype Programming (2016)**
2. **AFD Prototype Station 22 Program Analysis (2018)**

Fire & EMS Station Design Prototype Programming

June 1, 2016

PART I - BACKGROUND

A. General Information

This project provides for the design and construction of new Fire/EMS Station

B. Firefighter's Workday

The Austin Fire Department operates on a three-shift schedule. Each shift is on duty for 24 hours and off 48 hours. The shift change takes place at 12:00 Noon.

In addition to answering emergency calls, the firefighters are busy with various responsibilities during daytime hours until around 6:00 p.m. These duties include training, inspection, pre-fire planning, cleaning the apparatus, house cleaning, lawn work, station administrative work, and a mandatory physical fitness program.

The station requires a small study room, in a quiet location, with counter or desk space.

Firefighters prepare their own meals while at the station. Food is stored according to shift in pantries and refrigerators. The kitchen/dining room is also used as a social area.

C. The Fire Station and the Community

The station's eating and living areas should be screened from public view. It is a design consideration that personnel see out, but the public does not see in.

It is often necessary to leave the station unoccupied while personnel respond to calls. The station and parking areas must be easy to secure.

PART II – BUILDING AND SITE REQUIREMENTS

A. GENERAL

The minimum LEED standard shall be silver.

Neutral exterior colors are preferred over bright primary colors.

All materials in the Apparatus Room (to include the Decon, Bunker Gear Storage and Supply areas) should be moisture resistant, including doors and hardware, so that it can be hosed down for cleaning. In these areas, sealed masonry is preferred for wall construction. There shall be no suspended or gypsum ceiling in the Apparatus room. If there is an exposed metal deck, it shall be painted.

Provide space in kitchen to accommodate four (Owner-provided) 29 c.f. min. refrigerators and one (Owner-provided) commercial grade oven/stoves (gas if available) with commercial hood and fire suppression system.

No fireplace is to be provided.

Attention should be paid to acoustics in Day Room and Dining Room areas.

Provide a positive pressure separation between Apparatus Room and occupied areas, to prevent infiltration of exhaust fumes.

The lowest part of the Apparatus Room ceiling or roof structure shall be at least 20' above floor level.

Utilize sound attenuating wall construction to acoustically insulate Dormitory. Locate mechanical equipment away from dormitory and dormitory windows. Dormitories are to be acoustically sealed from the rest of the building and the corridor and each room from its adjacent rooms.

Provide covered patio area, large enough for two picnic tables, outside Day Room/Dining Room area.

Slope Apparatus Room to provided trench drains the length of the apparatus, slope floor as required (six inch total slope recommended). Do not create a step at doors from living quarters into Apparatus Room. Trench drain system shall drain into a sand filtration system before discharging to the site storm drain system.

B. TEXAS ACCESSIBILITY STANDARDS

All doors shall be 36" wide

All areas shall be accessible.

Toilet room doors shall not swing into "Clear Floor space" required for fixtures.

All doors to sleeping rooms shall be min. 36" wide. Furniture/built-ins or walls shall not interfere with the required 24" clearance on the interior strike side of doors. Rooms to be increased by length necessary to accommodate ADA requirements.

C. SITE

The station and site shall conform with the Austin Urban Design guidelines where possible, and "blend" with the surrounding neighborhood. Provide connecting pathways to and from adjacent properties.

Provide secured Employee Parking – 24 to 26 spaces, as well as Visitor Parking, including one handicapped space.

Provide sidewalk from parking area to nearest exit door. Provide sidewalks to Communications, Electrical, Mechanical and Equipment Storage Rooms.

Provide area for apparatus turn-around on site.

The largest truck that we will house will be a ladder truck.

If required by City of Austin Fleet, the fueling station shall be located at least 50' away from the building.

D. WOOD & PLASTICS

Each Dormitory Room is to be equipped with six clothing lockers. Provide shelf with light above the head of bed.

Provide clothing bars and hooks in clothing lockers. Lower bottom of clothing locker upper compartment to 5'-0" AFF. Two hooks in each locker, one on each side, six inches below rod, centered between rod and door.

Provide a stainless steel backsplash from below stove top to bottom of range hood at cook stove location.

Provide an island cabinet with built-in storage.

Provide storage cabinets and drawers in Office, no locks. Provide space for two 4 drawer locking legal file cabinets (by owner).

E. THERMAL & MOISTURE PROTECTION

All roofs shall be standing seam metal roof systems or similar. No asphalt shingles shall be installed.

Minimum roof slope is one inch/foot. Firmly attach to decking as directed by manufacturer.

F. DOORS & WINDOWS

Electrically operated fast action bi-fold doors, industrial grade.

a. Clear dimensions to be 14 ft. x 14 ft. for Fire Trucks.
b. Provide adequate view panels to allow apparatus drivers to see driveway, but minimize glazing to prevent overheating from solar gain. Use safety glazing in view panels (no Plexiglas).
c. Operable windows, where used, are to be sash type with lockable metal frames, provide insect screens. Horizontal sliders are not acceptable. The windows at the dorm rooms shall be mounted high with blackout shutters or blinds installed.
d. Jalousie or casement type windows are permitted as long as they comply with egress requirements.
e. No view panels are to be provided in exterior doors.
f. Provide glass view panel in the interior doors serving the Office, Exercise Room, Study, Apparatus Room, Day Room, and Kitchen. Storefront type doors are acceptable.

G. FINISHES

A durable, low-maintenance floor finish is to be provided in all areas of the station. Concrete floors are appropriate in Apparatus, Turnout, Janitor, Disinfection, Storage, Mechanical, Electrical and Communications rooms. Ceramic tile is acceptable in toilet areas.

The Apparatus Room is to have slip resistant coating (Sonneborn Sonoplex, 2 part epoxy resin coating, with sand texture) applied in strips below the fire trucks over smooth, trowel finished concrete slab (w/ a little bit of texture but not as much as broom finish).

Acoustical lay-in ceiling systems are preferred.

Showers in Toilet Rooms shall be thick set ceramic tile. Shower curb in handicap showers shall comply with TAS. Provide fold-down seat and grab bars in handicap shower.

H. SPECIALTIES

Turnout Lockers:

Fire: Provide for free hanging of clothes so they will dry more quickly. Shelf to be 12 inch wide, 2 x 14 solid wood. Provide 24 heavy duty hooks bolted into shelves to carry clothes. Locker to be equipped with an exhaust fan to aid in drying of firefighting gear.

Provide mop holders on wall in janitor closet.

Provide exterior garbage can enclosure with capacity for six garbage cans (3) trash and (3) recycle. Provide space below kitchen counter for concealed storage of a 20 gallon galvanized garbage can. Design for easy disposal of trash (opening in cabinet face).

Provide under-counter dishwasher and garbage disposal in kitchen.

Storage Room for yard equipment must accommodate a riding lawn mower (72"L x 52"W x 42"H) and gas can. Provide painted plywood shelf, two feet deep across back of room. Provide (2) 3’ wide doors.

I. EQUIPMENT

Commercial Range, Gas, 36-1/2 inch wide x 32-1/2 inch deep x 36 inch high cook top, 6 inch adjustable pipe legs, 6 open-type hi-speed burners of round design, range oven to be a min. of 25 inch wide x 26-1/2 inch deep x 14 inch high (Inside Dimensions), exterior to be 'Baked on Black Japan': Vulcan Model no. 36L77R or BAE

Provide Type II exhaust hood over range per previously approved "request for modification or Alternate Method of construction"

Refrigerators, 29 cubic feet, frost free, two (2) door, freezer on top, white, right hand open, without ice maker.

Commercial Ice Maker, at least 120 lb. capacity

PART III -MECHANICAL, PLUMBING AND ELECTRICAL REQUIREMENTS AND GUIDELINES

A. GENERAL INFORMATION

All spaces to have central air and heat except Apparatus Room, Turnout, Mechanical, Electrical, Mop/Supply, and Equipment Storage Room.

Install both furnaces in one mechanical room; provide raised housekeeping pads.

Communication room to be used for communication equipment only (i.e. telephone terminal board, alarm/paging equipment and future communication equipment).

B. MECHANICAL

Provide high quality commercial vent hoods with fire suppression systems, over stove locations. The hood is to be vented to the exterior through the roof. Clearances for hood and air ducting requirements should be detailed by Engineer and coordinated with Architect. (Do not oversize the amount of air exhausted, this is not a commercial kitchen, some past designs blow out the stove pilot lights.)

Provide sufficient exhaust fan in turn-out lockers to dry wet turn-out gear (see Part II, Item G-6). Provide pilot light on/off switch outside Bunker Gear room(s), with humidistat in lockers to keep fan on until gear is dry.

Provide "PLYMO Vent" exhaust system for every bay. The exhaust system shall be designed and installed by manufacturer or manufacturer representative(s).

C. PLUMBING

Janitor sink to be wall mounted deep mop sink with legs support and wall mounting kit.

Provide electric hi-low water cooler per plan.

Provide 1/2 inch gas stub out for extension to future gas grille (in patio area near kitchen).

Provide a fire sprinkler system in accordance with NFPA guidelines.

D. ELECTRICAL

Provide solar power system. The solar panels shall be roof mounted and incorporated in the design of the facility.

All lamps for fixtures are to be readily available – No specialty Items.

Outdoor lighting to be LED, unless specifically approved otherwise.

Install all LED interior lighting, to comply with City of Austin standards.

Provide power in kitchen for three each, 29 c.f. refrigerators to be provided by Owner.

Provide an emergency power generator serving devices outlined under "Emergency Power" label.

Provide power failure alarm with an audible and visual signal device in dormitory as part of generator panel. Alarm system to be battery powered to disengage upon start-up of emergency generator, return of permanent power or manual disconnection of annunciator.

All exterior lights (on building and yard lights) should be on a photo cell to turn them off during the day. In addition to the photo cell some exterior lights should be individually switched so that they can be turned off when not needed, as follows:

YARD LIGHTS - All yard lights are to be hooded so light source is not visible from nearby residential property. Fuel Station lighting may be accomplished with yard lighting.

PATIO LIGHTS - Provide switch at Dining Room & Day Room doors to turn off patio lights when not needed. Downlights recessed into soffit preferred.

FRONT DOOR - Do not provide switch to front door light. It should remain on after dark (on photocell).

APPARATUS ROOM DOOR AND APRON Provide lights at/above Apparatus Room doors to illuminate apron and accent building. Provide switch inside Apparatus Room.

Provide a "night light" system in the Fire Dormitory area which is actuated by a "station alerting/dispatch" signal (see attached diagrams).

a) This shall consist of small light fixtures to be located in the Dormitories.
b) They shall be activated by any "station alerting/dispatch" signal received by the alarm and communication systems.
c) The lights shall remain on for 45 seconds and then automatically shut off.
d) Provide manual On/Off (Night/Day) switch near the dormitory area with an identification label.
e) Night Light system shall be included on the emergency power system.

Provide LED reading lights in Dormitory at each bed, coordinate with bookshelf detail and location, wall switch at door. Also, provide a general illumination light in each dormitory (possibly on wall above door), with separate switch at door.

Provide ceiling fans in Day Room, Dining Room, Patio, Dormitory, Office, Exercise Room and Study. Provide on/off switch at wall with speed control.

Appendix: Size/Number of accommodations

E. DORMITORIES FOR FIRE CREWS

AFD requires 5 Dorm rooms in the station, double occupancy, with 6 clothing lockers per room.

F. DORMITORIES FOR EMS CREWS

EMS requires 3 Dorm rooms in the station, double occupancy, with 6 clothing lockers per room.

G. ADDITIONAL IDEAS TO CONSIDER:

Drive-through (or “pull-through”) apparatus bays are required.

Community uses may be incorporated into the station design. A public meeting room (maximum occupancy of 35 persons), which can be easily separated from the rest of the station by a locked vestibule, can double as a training/classroom for the firefighters. If incorporated into the design, this feature will require additional parking and two dedicated restroom facilities.

A dedicated room with exhaust fan is required for storing turnout clothing. A separate Decontamination room should be supplied with a commercial grade washer and dryer.

Overhangs protecting the overhead door areas are required to keep rain away from open bay doors.

Provide a covered patio, with lamping to facilitate night-time use.

The station design should allow for flexibility in site orientation.

No carpet in the exercise room. Separate the exercise room from the day room, office, study room and dorm room due to noise concerns.

Drain the showers rather than the bathroom areas.

AFD Prototype Station 22 Program Analysis

August 31, 2018

The following notes are added by Lawrence Group for this DCM:
1. This AFD Prototype Program Analysis for Station 22 was provided by the City of Austin.
1. The AFD prototype proposed for Station 22 is a 3-bay, 2-story building, therefore references to 4-bay stations are not applicable to Station 22.
2. All kitchen appliances noted below shall be provided by Owner, not by Design-Builder (D-B).
3. All other appliances and similar type equipment (such as commercial icemaker, washer, dryer, etc.) shall be provided by D-B.

The room and space requirements listed below were developed through an analysis of the prototype plans provided by the Owner and from information gathered from the Owner, AFD and EMS. The intent of this list is to offer the D-B team a starting point to understanding the needs of AFD and EMS personnel. The D-B shall discuss all room and space requirements, including adjacencies and access, with the Owner during the design phase. The expectation is for the D-B team to confirm, and if necessary, expand upon this list as part of the design process.

Hot Zone
The hot zone includes the most contaminated spaces in the station. AFD refers to the contaminated spaces as the hot zone and the non-contaminated spaces as the cold zone. The hot zone shall be separated from the cold zone using a pressurized containment system.

Apparatus Bay
- Provide drive through bays where possible.
- Trench drains shall be provided beneath each apparatus location and shall drain to a sand separator
- Provide ceiling hung heaters at each apparatus bay
- Provide views into the apparatus bay from the station common spaces to allow for visual control by means of door vision panels or windows
- Provide air conditioned and lockable medical closet (approximately 60 square feet) with built-in adjustable shelving
- Provide handwashing sink in or near warm zones
- Provide hazardous/flammable materials locker inside the bay for storage of small fuel containers
- Provide a vehicle exhaust system similar to Plymovent, coordinate with the Owner
- Bunk Gear/Turnout Gear located adjacent to and accessed from the apparatus bay
- Provide 24 turnout lockers for each 3-bay station and 30 turnout lockers for each 4-bay station, lockers shall be minimum six inches above the floor finish
- Provide area floor drains and easily cleanable floor finish
- Provide exhaust and dehumidification for all lockers
- EMS Gear located adjacent to and accessed from the apparatus bay
- Provide 12 stacked lockers (24 lockers total) at each station, lockers shall be minimum six inches above the floor finish
- Provide area floor drains and easily cleanable floor finish

Warm Zone
The warm zone includes spaces that may contain contaminants. These spaces may be accessed from the hot zone or from an air lock and may have additional access from the cold zone.

Decontamination Room
- This room is used by AFD personnel to wash clothes and to store bagged, contaminated clothes that are sent out for cleaning
- This room can be accessed from the apparatus bay or from an air lock space and it may have a connection to spaces in the cold zone as long as air pressure is controlled
- Provide electric, water and gas connections for side by side washer and dryer
- Provide commercial ice maker, floor drain and mop sink (24” x 24” above ground, stainless steel) if combined with mop supply room
- Prototype room is approximately 175 square feet

Mop/Supply
- The mop/supply room serves the entire station
- Provide access to this space from an air lock or other warm zone space, and from the cold zone
- Provide mop sink
- Provide built-in storage cabinets
- Prototype room is approximately 85 square feet

Cold Zone
- Cold Zone includes common and private spaces that do not contain any contaminants.
- There shall not be any direct connections between the cold zone and the hot zone unless adequately air pressurized.

Entry
- The entry is used as the public access point to the station and shall be separated from the remainder of the station. A solid or glass partition with a single lockable door can be used to separate the entry.
- If possible, there shall not be any direct views from the entry into the common spaces of the station.
- Provide a small exam room accessed from the entry; the prototype room is approximately 80 square feet. This room shall have a lockable door with vision panel. The Owner will provide furnishings for the exam room.
- Provide one accessible single occupant toilet room accessed from the entry
- Provide bi-level drinking fountain

Office
- The office is shared by AFD and EMS personnel
- Provide door with vision panel and privacy hardware
- Provide view into the entry from the office for visual control
- Provide built-in work surface with drawers

EMS Day Room
- The EMS day room combines office, shift change and break room functions into one space
- Locate near access point to apparatus bays

- Provide built-in work surface with drawers
- Provide blocking and connections for wall-mounted television
- Provide space for office furniture and lounge furniture to be provided by the Owner

Study

- Does not require visual or direct connection to common spaces
- Locate in a quiet area of the station, possibly near entry and office
- Provide built-in work surface with drawers
- Provide door with vision panel and privacy hardware
- Prototype room is approximately 115 square feet

Kitchen/Dining/Day Area

Provide an open space for the kitchen, dining and day area. Prototype space is approximately 1,400 square feet.

- Kitchen shall include island with storage and seating. Provide space for 12 total seats between the island and a dining table.
- Provide access to one bathing room from the day area
- Kitchen shall include four pantries with storage shelving on all available wall space
- Provide area for four refrigerators and upper cabinets above
- Provide range with oven, vent hood w/ fire suppression system, residential dishwasher, in-sink disposal, and undercounter ice maker with drain at the kitchen
- Provide blocking and connections for wall-mounted televisions in day area
- Provide water bottle filler in day area
- Provide ceiling fans in dining and day area
- Provide space for dining and lounge furniture to be provided by the Owner

Porch

- Provide covered porch with adequate space for two owner-provided picnic tables located under cover
- Provide access from the kitchen
- Provide space for outdoor cooking equipment to be provided by the Owner
- If gas is available, provide gas connection for outdoor grill

Sleeping Rooms

- Sleeping rooms shall be accessed from a corridor and located near the bathing rooms. Sleeping rooms shall be located in a quiet area of the station.
- AFD and EMS personnel prefer sleeping rooms to be cold, dark and quiet
- Provide space for two beds and six clothing lockers in each sleeping room
- Provide operable windows
- Provide contract-grade manually-operated blackout window shades
- Provide ceiling fan in each sleeping room
- Provide one task light and shelf at each bed
- At 3-bay stations, provide four sleeping rooms for AFD and two sleeping rooms for EMS. At 4-bay stations, provide six sleeping rooms for AFD and three sleeping rooms for EMS
- Prototype sleeping rooms are approximately 150 square feet

Bathing Rooms

- Bathing rooms shall be located near the sleeping rooms
- Provide toilet, sink, bench, two robe hooks and shower in each bathing room
- Provide four bathing rooms at each station
- Provide number of accessible bathing rooms required by the building code, ADA and TAS, but not less than one

Exercise Room

- Provide access to exterior from the exercise room
- Provide views into the exercise room for visual control of the exercise room
- Provide ceiling fan(s)
- At 3-bay stations, provide space for two treadmills, two rowers and one free weight set. At 4-bay stations, provide space for three treadmills, two rowers, and one free weight set. All exercise equipment will be provided by the Owner.

Communications Room

- Provide access from exterior
- Door shall have security card reader
- Coordinate with Owner for exact space requirements

Mechanical Room

- The approach and entry to this room shall be accessible
- Preferred access is from the exterior
- Provide space as required by specified equipment

Fire Riser Room

- The approach and entry to this room shall be accessible
- Provide space as required by specified equipment

Outdoor Storage

- Provide storage space for lawn mower and other yard equipment

Record of Meetings

08.23.18 Site Visit - AFD 1 / EMS 6

Attendees:
Alejandro Wolniewitz - *Austin Fire Department (AFD)*

Karen Renick - *Lawrence Group (LG)*

Nick Faust - *Lawrence Group (LG)*

08.24.18 Site Visit - AFD 3

Attendees:
Alejandro Wolniewitz - *AFD*

Karen Renick - *LG*

Nick Faust - *LG*

08.29.18 Site Visit - AFD 1 / EMS 6

Attendees:
Alejandro Wolniewitz - *AFD*

Karen Renick - *LG*

Patrick Asiedu - *Kings Struarchural*

08.30.18 Site Visit - AFD 3

Attendees:
Alejandro Wolniewitz - *AFD*

Karen Renick - *LG*

Patrick Asiedu - *Kings*

08.30.18 Site Visit - AFD 22 / EMS 12

Attendees:
Alejandro Wolniewitz - *AFD*

Karen Renick - *LG*

Nick Faust - *LG*

09.05.18 Site Visit - AFD 22 / EMS 12

Attendees:
Alejandro Wolniewitz - *AFD*

Karen Renick - *LG*

Patrick Asiedu - *Kings*

Blayne Stansberry - *Stansberry Engineering, Co.*

09.10.18 Site Visit - AFD 3

Attendees:
Alejandro Wolniewitz - *AFD*

Blayne Stansberry - *Stansberry*

Shawn Allen - *Jose I. Guerra (JIG - Mechanical)*

Brandon Reyes - *Jose I. Guerra (JIG - Plumbing)*

Colby Brock - *Jose I. Guerra (JIG - Electrical)*

Steven Jalnos - *Jose I. Guerra (JIG - Mechanical)*

Karen Renick - *LG*

09.11.18 Site Visit - AFD 1 / EMS 6

Attendees:
Alejandro Wolniewitz - *AFD*

Karen Renick - *LG*

Blayne Stansberry - *Stansberry*

Shawn Allen - *JIG - Mechanical*

Brandon Reyes - *JIG - Plumbing*

Colby Brock - *JIG - Electrical*

Steven Jalnos - *JIG - Mechanical*

09.12.18 Site Visit - AFD 22 / EMS 12

Attendees:
Alejandro Wolniewtiz - *AFD*

Karen Renick - *LG*

Shawn Allen - *JIG - Mechanical*

Brandon Reyes - *JIG - Plumbing*

Colby Brock - *JIG - Electrical*

Steven Jalnos - *JIG - Mechanical*

09.13.18 Meeting by phone - Test Fits Review w/ AFD

Attendees:
Alejandro Wolniewtiz - *AFD*

I. Earl Swisher - *LG*

Karen Renick - *LG*

09.14.18 Meeting at Lawrence Group - Test Fits Review w/ EMS & AFD

Attendees:
Alejandro Wolniewtiz - *AFD*

Gadiel Arellano - *Emergency Medical Service (EMS)*

I. Earl Swisher - *LG*

Karen Renick - *LG*

09.18.18 Meeting at Lawrence Group - Structural Consultant

Attendees:

Patrick Asiedu - *Kings*

I. Earl Swisher - *LG*

Karen Renick - *LG*

09.25.18 Meeting at Lawrence Group - A/E Team w/ AFD

Attendees:
Alejandro Wolniewitz - *AFD*

I. Earl Swisher - *LG*

Karen Renick - *LG*

Blayne Stansberry - *Stansberry*

Patrick Asiedu - *Kings*

Shawn Allen - *JIG (Mechanical)*

Brandon Reyes - *JIG (Plumbing)*

Colby Brock - *JIG (Electrical)*

Steven Jalnos - *JIG (Mechanical)*

10.08.18 Meeting at Lawrence Group - 50% DCM Review w/ AFD & COA

Attendees:
Alejandro Wolniewitz - *AFD*

LaVonia Horne-Williams - *City of Austin (COA)*

I. Earl Swisher - *LG*

Karen Renick - *LG*

Nick Faust - *LG*

10.16.18 Meeting at Lawrence Group - Pre 100% DCM Review w/ Civil Consultant & AFD

Attendees:
I. Earl Swisher - *LG*

Karen Renick - *LG*

Blayne Stansberry - *Stansberry*

10.17.18 Meeting by phone - Pre 100% DCM Review w/ Cost Estimator

Attendees:
I. Earl Swisher - *LG*

Karen Renick - *LG*

Stuart Hoevelman - *Sunland Group*

10.24.18 Meeting at Jose I. Guerra - Pre 100% DCM Review w/ MEP Consultants

Attendees:
Karen Renick - *LG*

Shawn Allen - *JIG - Mechanical*

Brandon Reyes - *JIG - Plumbing*

Colby Brock - *JIG - Electrical*

Steven Jalnos - *JIG - Mechanical*

10.30.18 Meeting at Lawrence Group - Pre 100% DCM Review w/ Structural Consultant

Attendees:
I. Earl Swisher - *LG*

Karen Renick - *LG*

Patrick Asiedu - *Kings*

12.03.18 Meeting at Public Works Department - Introduction to new PM

Attendees:
Janice White - *Office of City Architect (OCA) / Public Works Department (PWD)*

Burton Jones - *OCA/PWD*

Paul Mendoza - *OCA/PWD*

Michelle Noriega - *OCA/PWD*

Alejandro Wolniewitz - *AFD*

Gadiel Arellano - *EMS*

I. Earl Swisher - *LG*

Karen Renick - *LG*

Nick Faust - *LG*

02.08.19 Meeting at Lawrence Group - LG Review of COA Content

Attendees:
Michelle Noriega - *OCA/PWD*

Karen Renick - *LG*

Nick Faust - *LG*

02.21.19 Meeting at Lawrence Group - Review of FS1 Structure

Attendees:
Karen Renick - *LG*

Patrick Asiedu - *Kings*

02.28.19 Meeting by phone - Review of FS22 Estimate

Attendees:
Michelle Noriega - *OCA/PWD*

Karen Renick - *LG*

Stuart Hoevelman - *Sunland Group*

Section Attributions

1 | EXECUTIVE SUMMARY

Content provided by City of Austin

A. Executive Summary
   1. Purpose of the Design Criteria Manual
   2. Background
   3. Project Description
   4. Steps Following the Selection of the Design-Builder
   5. Concept Collaboration
   6. General Project Locations

2 | APPROVAL

Content provided by City of Austin

3 | DESIGN CRITERIA MANUAL CONTRIBUTORS

Content provided by City of Austin and Lawrence Group

4 | SPACE/ADJACENCY ANALYSIS & REQUIREMENTS

Content provided by City of Austin

GENERAL GUIDELINES

A. Design Strategies
   1. All Stations
   2. AFD 22 / EMS 12 (Only)
B. Special Requirements
   1. All Stations
   2. AFD 22 / EMS 12 (Only)

5 | SITE ANALYSIS

Sections provided as noted below

AFD 1 / EMS 6

A. Project Area Map - *Stansberry*
B. Summary Description
   1. Description - *Stansberry*
   2. Additional Site Requirements - *City of Austin*
C. Existing Site Surveys & Analysis
   1. Record Site Survey - *City of Austin*
   2. Deeds, Legal Restrictions, and/or Lease Agreements - *City of Austin*
   3. Utilities, Meters and Service Lines - *Stansberry*
   4. Stormwater and Drainage - *Stansberry*
   5. Driveways & Parking - *Stansberry*
   6. Circulation and Access - *Stansberry*
   7. Site Amenities - *Stansberry*
   8. Exterior Signs (Wayfinding & Advertising) - *Stansberry*
   9. Site Information - *Stansberry*

D. Site Development Requirements
   1. Community Involvement - *City of Austin*
   2. General Development Considerations - *Stansberry*
   3. Other Items - *City of Austin*

AFD 3
A. Project Area Map - *Stansberry*
B. Summary Description
   1. Description - *Stansberry*
   2. Additional Site Requirements - *City of Austin*
C. Existing Site Surveys & Analysis
   1. Record Site Survey - *City of Austin*
   2. Deeds, Legal Restrictions, and/or Lease Agreements - *City of Austin*
   3. Utilities, Meters and Service Lines - *Stansberry*
   4. Stormwater and Drainage - *Stansberry*
   5. Driveways & Parking - *Stansberry*
   6. Circulation and Access - *Stansberry*
   7. Site Amenities - *Stansberry*
   8. Exterior Signs (Wayfinding & Advertising) - *Stansberry*
   9. Site Information - *Stansberry*
D. Site Development Requirements
   1. Community Involvement - *City of Austin*
   2. General Development Considerations - *Stansberry*
   3. Other Items - *City of Austin*

AFD 22 / EMS 12
A. Project Area Map - *Stansberry*
B. Summary Description
   1. Description - *Stansberry*
   2. Additional Site Requirements - *City of Austin*
C. Existing Site Surveys & Analysis
   1. Record Site Survey - *City of Austin*
   2. Deeds, Legal Restrictions, and/or Lease Agreements - *City of Austin*
   3. Utilities, Meters and Service Lines - *Stansberry*
   4. Stormwater and Drainage - *Stansberry*
   5. Driveways & Parking - *Stansberry*
   6. Circulation and Access - *Stansberry*
   7. Site Amenities - *Stansberry*
   8. Exterior Signs (Wayfinding & Advertising) - *Stansberry*
   9. Site Information - *Stansberry*
D. Site Development Requirements
   1. Community Involvement - *City of Austin*
   2. General Development Considerations - *Stansberry*
   3. Other Items - *City of Austin*

6 | EXISTING BUILDING ANALYSIS

Sections provided as noted below

AFD 1 / EMS 6
A. Architectural - *Lawrence Group*
B. Structural - *Kings Struarchural*

C. Mechanical - *Jose I. Guerra, Inc.*
D. Electrical - *Jose I. Guerra, Inc.*
E. Plumbing - *Jose I. Guerra, Inc.*
F. Fire-Suppression Systems - *Jose I. Guerra, Inc.*
G. Fire-Alarm Systems - *Jose I. Guerra, Inc.*

AFD 3
A. Architectural - *Lawrence Group*
B. Structural - *Kings Struarchural*
C. Mechanical - *Jose I. Guerra, Inc.*
D. Electrical - *Jose I. Guerra, Inc.*
E. Plumbing - *Jose I. Guerra, Inc.*
F. Fire-Suppression Systems - *Jose I. Guerra, Inc.*
G. Fire-Alarm Systems - *Jose I. Guerra, Inc.*

AFD 22 / EMS 12
A. Architectural - *Lawrence Group*
B. Structural - *Kings Struarchural*
C. Mechanical - *Jose I. Guerra, Inc.*
D. Electrical - *Jose I. Guerra, Inc.*
E. Plumbing - *Jose I. Guerra, Inc.*
F. Fire-Suppression Systems - *Jose I. Guerra, Inc.*
G. Fire-Alarm Systems - *Jose I. Guerra, Inc.*

7 | PROPOSED CONCEPTUAL PROJECTS

Sections provided as noted below

ALL STATIONS
A. Program Design Goals - *City of Austin*
B. General Guidelines - *City of Austin*
   1. People Experience / Environment
   2. Operation Efficiency
   3. Sustainable Design (LEED Practices) & Energy Efficiency
C. Design & Construction Phasing/Planning - *Sunland Group*

AFD 1 / EMS 6
A. Feasibility Test Fit Drawings of Proposed Conceptual Project - *Lawrence Group*
B. Narratives of Proposed Conceptual Project
   1. Architectural - *Lawrence Group*
   2. Structural - *Kings Struarchural*
   3. Mechanical - *Jose I. Guerra, Inc.*
   4. Electrical - *Jose I. Guerra, Inc.*
   5. Plumbing - *Jose I. Guerra, Inc.*
   6. Fire-Suppression Systems - *Jose I. Guerra, Inc.*
   7. Fire-Alarm Systems - *Jose I. Guerra, Inc.*

AFD 3
A. Feasibility Test Fit Drawings of Proposed Conceptual Project - *Lawrence Group*
B. Narratives of Proposed Conceptual Project
   1. Architectural - *Lawrence Group*
   2. Structural - *Kings Struarchural*
   3. Mechanical - *Jose I. Guerra, Inc.*

4. Electrical - *Jose I. Guerra, Inc.*
5. Plumbing - *Jose I. Guerra, Inc.*
6. Fire-Suppression Systems - *Jose I. Guerra, Inc.*
7. Fire-Alarm Systems - *Jose I. Guerra, Inc.*

AFD 22 / EMS 12

A. Feasibility Test Fit Drawings of Proposed Conceptual Project - *City of Austin / AFD*
B. Narratives of Proposed Conceptual Project
   1. Architectural - *Lawrence Group*
   2. Structural - *Kings Struarchural*
   3. Mechanical - *Jose I. Guerra, Inc.*
   4. Electrical - *Jose I. Guerra, Inc.*
   5. Plumbing - *Jose I. Guerra, Inc.*
   6. Fire-Suppression Systems - *Jose I. Guerra, Inc.*
   7. Fire-Alarm Systems - *Jose I. Guerra, Inc.*

8 | TECHNICAL CRITERIA AND STANDARDS

Sections provided as noted below

A. General Guidelines & Design Standards- *City of Austin; Reviewed and edited by LG*
   1. Codes
   2. Accessibility
   3. Quality
B. Architectural Standards - *City of Austin; Reviewed and Edited by LG*
   1. Exterior Finishes and Materials
   2. Interior Finishes and Materials
   3. Ceilings
   4. Doors and Windows
   5. Signage and Graphics
   6. Apparatus Bay Doors
   7. Art in Public Places (AIPP) - City of Austin Requirement
   8. Equipment
   9. Furnishings
   10. Acoustics
   11. Termite Control
   12. Elevators
   13. Flooring
   14. Definitions
C. Structural Standards - *Kings Struarchural*
   1. Structural Design Criteria
   2. Loads
   3. Risk Category of Building
   4. Deflection Criteria
   5. Structural Tests and Special Inspection
   6. Structural Framing
   7. Structural Foundations
D. Mechanical Standards - *City of Austin; Reviewed and Edited by JIG*
   1. HVAC Design Criteria
   2. HVAC Systems
   3. Exhaust Systems
   4. Energy Recovery Ventilator System
   5. Piping Systems

6. Air Distribution Systems
7. Pressurization
8. Controls
9. Building Systems Startup and Verification

E. Electrical Standards - *City of Austin; Reviewed and Edited by JIG*
1. Electrical Service
2. Electrical Distribution
3. Raceway and Feeder
4. Grounding
5. Lighting
6. Alerting System
7. Power
8. Wiring Devices
9. Emergency Power
10. Lightning Protection
11. Charging Station
12. PV Solar Panel Ready
13. Short Circuit and Coordination/ Arc Flash Study

F. Plumbing Standards - *City of Austin; Reviewed and Edited by JIG*
1. Water Service Connection
2. Domestic Water Service
3. Sanitary Sewer
4. Domestic Cold/Hot Water Distribution
5. Water Heater
6. Natural Gas
7. Plumbing Fixtures
8. Plumbing Demolition
9. Stormwater Piping
10. Pipe Sizing Criteria
11. Elevator Pit Drainage System

G. Fire-Suppression Systems Standards - *City of Austin; Reviewed and Edited by JIG*
1. General
2. Sprinkler Piping
3. Sprinklers

H. Fire-Alarm Systems Standards - *City of Austin; Reviewed and Edited by JIG*
1. General

I. Telecommunications Standards - *City of Austin; Reviewed and Edited by JIG*
1. General

9 | CONCEPTUAL PROJECT ESTIMATES AND SCHEDULES

ALL STATIONS - *Lawrence Group*

A. General Statement
1. Summary

AFD 1 / EMS 6

A. Feasibility Test Fit Drawings of Proposed Conceptual Project w/ Keynotes - *Lawrence Group*
B. Cost Estimate of Proposed Conceptual Project - *Sunland Group*
C. Summary Schedule of Design and Construction Phasing - *Sunland Group*

AFD 3

A. Feasibility Test Fit Drawings of Proposed Conceptual Project w/ Keynotes - *Lawrence Group*
B. Cost Estimate of Proposed Conceptual Project - *Sunland Group*
C. Summary Schedule of Design and Construction Phasing - *Sunland Group*

AFD 22 / EMS 12

A. Feasibility Test Fit Drawings of Proposed Conceptual Project w/ Keynotes - *Lawrence Group*
B. Cost Estimate of Proposed Conceptual Project - *Sunland Group*
C. Summary Schedule of Design and Construction Phasing - *Sunland Group*

10 | APPENDICES

APPENDIX A - SITE EXHIBITS - *Stansberry / City of Austin*

1. AFD 1 / EMS 6 Lease
2. AFD 1 / EMS 6 Wastewater Tap Record
3. AFD 1 / EMS 6 Topography & Improvement Survey
4. AFD 3 Deed
5. AFD 3 Water Tap Record
6. AFD 3 Wastewater Tap Record
7. AFD 3 Flood Profiles (1 of 2)
8. AFD 3 Flood Profiles (2 of 2)
9. AFD 22 / EMS 12 Deed
10. AFD 22 / EMS 12 Water Tap Record
11. AFD 22 / EMS 12 Existing Site Plan (1 of 2)
12. AFD 22 / EMS 12 Existing Site Plan (2 of 2)
13. AFD 22 / EMS 12 Addition to EMS 12 Documents (1 of 5)
14. AFD 22 / EMS 12 Addition to EMS 12 Documents (2 of 5)
15. AFD 22 / EMS 12 Addition to EMS 12 Documents (3 of 5)
16. AFD 22 / EMS 12 Addition to EMS 12 Documents (4 of 5)
17. AFD 22 / EMS 12 Addition to EMS 12 Documents (5 of 5)

APPENDIX B - ARCHITECTURAL EXHIBITS - *Lawrence Group*

1. National Register of Historic Places - FAQs

APPENDIX C - STRUCTURAL EXHIBITS - *Kings Struarchural*

1. AFD 1 / EMS 6 Level 1 Structural Grid
2. AFD 1 / EMS 6 Level 2 Structural Grid
3. AFD 1 / EMS 6 Roof Level Structural Grid
4. AFD 1 / EMS 6 Annex Foundation Plan & Details

APPENDIX D - COMMUNICATIONS ROOMS - *City of Austin / AFD*

1. Door on End Wall
2. Door on Side Wall

APPENDIX E - FIRE & EMS STATION DESIGN PROTOYPE PROGRAMMING - *COA / AFD*

1. Fire & EMS Station Design Prototype Programming (2016)
2. AFD Prototype Station 22 Program Analysis (2018)

APPENDIX F - RECORD OF MEETINGS - *Lawrence Group*

APPENDIX G - SECTION ATTRIBUTIONS - *Lawrence Group*

APPENDIX H - ASBESTOS AND LEAD STUDIES - *City of Austin*

1. AFD 1 / EMS 6 Asbestos Study
2. AFD 1 / EMS 6 Lead Study

3. AFD 3 Asbestos Study
4. AFD 3 Lead Study
5. AFD 22 / EMS 12 Asbestos Study
6. AFD 22 / EMS 12 Lead Study

APPENDIX J - FUEL STATION

APPENDIX K - STRUCTURAL INVESTIGATIONS & GEOTECH REPORT *- City of Austin / AFD*

1. AFD 3 and AFD 22 / EMS 12 Summary Report - Phase 1
2. AFD 3 and AFD 22 / EMS 12 Summary Report - Phase 2
3. City Engineer letter re: Summary Report - Phase 2
4. AFD 3 and AFD 22 / EMS 12 Geotech Report

Asbestos and Lead Studies

The following City of Austin documents are included in this Appendix:

1. **AFD 1 / EMS 6 Asbestos Study**
2. **AFD 1 / EMS 6 Lead Study**
3. **AFD 3 Asbestos Study**
4. **AFD 3 Lead Study**
5. **AFD 22 / EMS 12 Asbestos Study**
6. **AFD 22 / EMS 12 Lead Study**

AFD 1 / EMS 6 Asbestos Study

CITY OF AUSTIN

ASBESTOS WORK REQUEST TO AVOID DISTURBING POTENTIAL ASBESTOS CONTAINING BUILDING MATERIALS

NOTE: A WORK REQUEST OR AN ASBESTOS INSPECTION REQUEST MUST BE SUBMITTED FOR ALL RENOVATION, REMODELLING, DEMOLITION OR MAINTENANCE WORK WHETHER OR NOT ASBESTOS CONTAINING MATERIALS MIGHT BE DISTURBED. THE REQUEST FORM MUST BE RECEIVED AND APPROVED BEFORE ANY WORK CAN BE PERFORMED. THIS FORM SHOULD BE USED FOR PROJECTS WHICH DO NOT EXCEED THAT WORK THAT CAN BE DONE BY ONE WORKER IN ONE WORKING DAY. FOR LARGER PROJECTS, USE THE ASBESTOS INSPECTION REQUEST FORM

DATE OF REQUEST: 04/03/2018
DEPARTMENT / DIVISION: Austin Fire Department
NAME OF PROJECT: Fire Station #1 Deferred Maintenance
NAME OF REQUESTER: Alejandro Wolniewitz
TITLE: Project Manager
TELEPHONE NUMBER: 512-974-1286 FAX NUMBER:
SIGNATURE:

☐ EMERGENCY DECLARATION
ATTACH AFFIDAVIT

FOR ASBESTOS/LEAD(Pb)/MOLD MGMT GROUP USE
DATE RECEIVED 4/3/18
REQUEST NUMBER 18254
PRIORITY RATING 191
INSPECTION SCHEDULED FOR
INSPECTION BY

AREA IN WHICH WORK IS TO TAKE PLACE:
STREET ADDRESS: 401 East Fifth Street
AREA OF BUILDING: Engine bays & drive
REQUESTED START WORK DATE: Aug-18 ANTICIPATED WORK FINISH DATE: May-19
PLEASE ATTACH A FLOOR PLAN NO LARGER THAN 11" by 17" INDICATING LOCATION OF WORK

DESCRIPTION OF WORK TO BE DONE: (IF ADDITIONAL SPACE IS NEEDED, CONTINUE ON SEPARATE SHEET)

Replacement of all electrical wiring, replacement of HVAC, Plumbing, ceilings, windows, flooring, removal of interior walls, cabinets, lockers, flooring.

DESCRIPTION OF BUILDING MATERIALS THAT MIGHT BE DISTURBED: (INCLUDE LOCATION AND TYPE OF MATERIALS)
(IF ADDITIONAL SPACE IS NEEDED, CONTINUE ON SEPARATE SHEET)

All items located in the existing building - Concrete foundation and slabs, masonry walls, metal deck and roofing, electrical, heating and ventilation systems, drywall, flooring and ceiling finish materilas, plumbing and plumbing connections, interior walls, cabinets.

PRIORITY OF PROJECT: THERE IS A LIMITED NUMBER OF RESOURCES AVAILABLE FOR INSPECTIONS. IF AN INSPECTION IS NEEDED, DESCRIBE HOW SOON THE WORK MUST BE DONE AND WHAT COULD HAPPEN IF THE WORK WERE NOT DONE WITHIN THE INDICATED TIME

☑ 1 WEEK TO 1 MONTH ☑ 1 TO 3 MONTHS ☐ 3 TO 6 MONTHS ☐ OVER 6 MONTHS
☐ OTHER
COMMENTS: This is considered an urgent project as the current electrical is falling and not replacement parts exist. Next power failure could cause the Station to be closed out.

CONTACT PERSON: IDENTIFY A PERSON WHO WILL BE AVAILABLE TO ANSWER QUESTIONS ABOUT THIS PROJECT AND CAN MAKE ARRANGEMENTS TO HAVE THE BUILDING ACCESSIBLE TO AN INSPECTOR
NAME: Alejandro Wolniewitz
TELEPHONE NUMBER: 512/974-1286 FAX NUMBER:

(THIS AREA TO BE USED BY THE ASBESTOS/ LEAD(Pb)/MOLD MANAGEMENT GROUP)

APPROVAL
☐ GRANTED WITHOUT CONDITIONS
☐ GRANTED WITH CONDITIONS * (SEE COMMENTS)
☒ DENIED (SEE COMMENTS)

AUTHORIZED BY:
NAME: Omar Almousli
TITLE: Asbestos Inspector / PM
SIGNATURE: Almousli
DATE: 6.6.18

COMMENTS: Windows and door caulking materials, window glazing material and sink undercoating tested positive for Asbestos. Do not disturb these materials

* ***ALL WORK THAT MAY DISTURB THESE MATERIALS MUST BE PERFORMED BY PROPERLY TRAINED, EQUIPPED AND LICENSED PERSONNEL EMPLOYING PREVIOUSLY APPROVED WORK PROCEDURES***

SEND THIS FORM TO: ASBESTOS/LEAD(Pb)/MOLD MANAGEMENT GROUP, BUILDING SERVICES DEPARTMENT
TELEPHONE 974-9187 OR 974-7154

FORM ASB 09.30.15

AFD 1 / EMS 6 Lead Study

CITY OF AUSTIN

LEAD (Pb) WORK REQUEST TO AVOID DISTURBING POTENTIAL LEAD (Pb) CONTAINING BUILDING MATERIALS

NOTE: A WORK REQUEST OR A LEAD (Pb) BASED PAINT INSPECTION REQUEST MUST BE SUBMITTED FOR ALL RENOVATION, REMODELING, DEMOLITION OR MAINTENANCE WORK **WHETHER OR NOT LEAD (Pb) CONTAINING MATERIALS MIGHT BE DISTURBED.** THE REQUEST FORM MUST BE APPROVED AND RECEIVED BEFORE ANY WORK CAN BE PERFORMED. THIS FORM SHOULD BE USED FOR PROJECTS WHICH DO NOT EXCEED THAT WORK WHICH CAN BE DONE BY ONE WORKER IN ONE WORKING DAY. FOR LARGER PROJECTS, USE THE LEAD (Pb) BASED PAINT INSPECTION FORM.

DATE OF REQUEST: 4/6/18
DEPARTMENT / DIVISION: BSD
NAME OF PROJECT: Fire Station #1 Deferred Maintenance

☐ EMERGENCY DECLARATION
ATTACH AFFIDAVIT

FOR ASBESTOS/LEAD (Pb)/MOLD MGMT GROUP USE
DATE RECEIVED: 4/3/18
REQUEST NUMBER: 18200L
PRIORITY RATING: 191
INSPECTION SCHEDULED FOR:
INSPECTION BY:

NAME OF REQUESTER: Alejandro Wolniewitz
TITLE: Project Manager
TELEPHONE NUMBER: 512-974-1286 FAX NUMBER:
SIGNATURE:

AREA IN WHICH WORK IS TO TAKE PLACE:
STREET ADDRESS: 401 E 5th street
AREA OF BUILDING: Engine bays and drive

REQUESTED START WORK DATE: 8/18/18 ANTICIPATED WORK FINISH DATE: 5/19/18

PLEASE ATTACH A FLOOR PLAN NO LARGER THAN 11" by 17" INDICATING LOCATION OF WORK.

DESCRIPTION OF WORK TO BE DONE: (IF ADDITIONAL SPACE IS NEEDED, CONTINUE ON SEPARATE SHEET)
Replacement of all electrical wiring, replacement of HVAC, Plumbing, ceilings, windows, flooring, removal of interior walls, cabinets, lockers, flooring.

DESCRIPTION OF BUILDING MATERIALS THAT MIGHT BE DISTURBED: (INCLUDE LOCATION AND TYPE OF MATERIALS)
(IF ADDITIONAL SPACE IS NEEDED, CONTINUE ON SEPARATE SHEET)
All items located in the ecisting building - concrete foundation and slabs, masonry walls, metal deck and roofing,electrical, heating, and ventilation systems, drywall, flooring and ceiling finsih materials, plumbing connections, interior walls, cabinets

PRIORITY OF PROJECT: THERE IS A LIMITED NUMBER OF RESOURCES AVAILABLE FOR INSPECTIONS. IF AN INSPECTION IS NEEDED, DESCRIBE HOW SOON THE WORK MUST BE DONE AND WHAT COULD HAPPEN IF THE WORK WERE NOT DONE WITHIN THE INDICATED TIME.

☑ 1 WEEK TO 1 MONTH ☐ 1 TO 3 MONTHS ☐ 3 TO 6 MONTHS ☐ OVER 6 MONTHS
☐ OTHER

COMMENTS: This is cconsidered an uregnt project as the current electrical is failing and not replacement parts exist. Next power failure could cause the Sation to be closed out

CONTACT PERSON: IDENTIFY A PERSON WHO WILL BE AVAILABLE TO ANSWER QUESTIONS ABOUT THIS PROJECT AND CAN MAKE ARRANGEMENTS TO HAVE THE BUILDING ACCESSIBLE TO AN INSPECTOR.

NAME: Alejandro Wolniewitz
TELEPHONE NUMBER: 512/974-1286 FAX NUMBER:

(THIS AREA TO BE USED BY THE ASBESTOS/LEAD (Pb)/MOLD MANAGEMENT GROUP)

APPROVAL:
☐ GRANTED WITHOUT CONDITIONS
☐ GRANTED WITH CONDITIONS * (SEE COMMENTS)
☑ DENIED (SEE COMMENTS)

AUTHORIZED BY:
NAME: Omar Almousli
TITLE: Project Manager
SIGNATURE: Almousli Omar
DATE: 6.6.18

COMMENTS: most of the materials affected by this renovation contain lead Please contact ALMMG to arrange for lead remediation

* *ALL WORK THAT MAY DISTURB THESE MATERIALS MUST BE PERFORMED BY PROPERLY TRAINED, EQUIPPED AND LICENSED PERSONNEL EMPLOYING PREVIOUSLY APPROVED WORK PROCEDURES.*

SEND THIS FORM TO: ASBESTOS/LEAD (Pb)/MOLD MANAGEMENT GROUP, BUILDING SERVICES DEPARTMENT
TELEPHONE: 974-9187 OR 974-7154

FORM LEADRQST/ 09.30.15

AFD 3 Asbestos Study

CITY OF AUSTIN

ASBESTOS WORK REQUEST TO AVOID DISTURBING POTENTIAL ASBESTOS CONTAINING BUILDING MATERIALS

NOTE: A WORK REQUEST OR AN ASBESTOS INSPECTION REQUEST MUST BE SUBMITTED FOR ALL RENOVATION, REMODELLING, DEMOLITION OR MAINTENANCE WORK WHETHER OR NOT ASBESTOS CONTAINING MATERIALS MIGHT BE DISTURBED THE REQUEST FORM MUST BE RECEIVED AND APPROVED BEFORE ANY WORK CAN BE PERFORMED THIS FORM SHOULD BE USED FOR PROJECTS WHICH DO NOT EXCEED THAT WORK THAT CAN BE DONE BY ONE WORKER IN ONE WORKING DAY FOR LARGER PROJECTS USE THE ASBESTOS INSPECTION REQUEST FORM

DATE OF REQUEST: 03/29/2018
DEPARTMENT / DIVISION: Austin Fire Department
NAME OF PROJECT: Fire Station #3 Bay Replacement
NAME OF REQUESTER: Alejandro Wolniewitz
TITLE: Project Manager
TELEPHONE NUMBER: 512/974-1286 FAX NUMBER:
SIGNATURE:

☐ EMERGENCY DECLARATION
ATTACH AFFIDAVIT

FOR ASBESTOS/LEAD(Pb)/MOLD MGMT GROUP USE
DATE RECEIVED 3.29.18
REQUEST NUMBER 18246
PRIORITY RATING 291
INSPECTION SCHEDULED FOR
INSPECTION BY

AREA IN WHICH WORK IS TO TAKE PLACE:
STREET ADDRESS: 201 W. 30th St
AREA OF BUILDING: Engine bays & drive
REQUESTED START WORK DATE: August , 2018 ANTICIPATED WORK FINISH DATE: February, 2019
PLEASE ATTACH A FLOOR PLAN NO LARGER THAN 11" by 17" INDICATING LOCATION OF WORK

DESCRIPTION OF WORK TO BE DONE: (IF ADDITIONAL SPACE IS NEEDED, CONTINUE ON SEPARATE SHEET)

Demolition and replacement of engine bays (garage); other station facilities to remain including joint wall.

DESCRIPTION OF BUILDING MATERIALS THAT MIGHT BE DISTURBED: (INCLUDE LOCATION AND TYPE OF MATERIALS)
(IF ADDITIONAL SPACE IS NEEDED, CONTINUE ON SEPARATE SHEET)

All items located in the existing engine bays - Concrete foundation and slabs, masonry walls, metal deck and roofing, electrical, heating and ventilation systems, minor drywall.

PRIORITY OF PROJECT: THERE IS A LIMITED NUMBER OF RESOURCES AVAILABLE FOR INSPECTIONS IF AN INSPECTION IS NEEDED, DESCRIBE HOW SOON THE WORK MUST BE DONE AND WHAT COULD HAPPEN IF THE WORK WERE NOT DONE WITHIN THE INDICATED TIME

☐ 1 WEEK TO 1 MONTH ☑ 1 TO 3 MONTHS ☐ 3 TO 6 MONTHS ☐ OVER 6 MONTHS
☐ OTHER
COMMENTS: This is considered an urgent project as the current slabs are failing and AFD equipment has been forced to park outside in the weather.

CONTACT PERSON: IDENTIFY A PERSON WHO WILL BE AVAILABLE TO ANSWER QUESTIONS ABOUT THIS PROJECT AND CAN MAKE ARRANGEMENTS TO HAVE THE BUILDING ACCESSIBLE TO AN INSPECTOR
NAME: Alejandro Wolniewitz
TELEPHONE NUMBER: 512/974-1286 FAX NUMBER:

(THIS AREA TO BE USED BY THE ASBESTOS/ LEAD(Pb)/MOLD MANAGEMENT GROUP)

APPROVAL
☐ GRANTED WITHOUT CONDITIONS
☑ GRANTED WITH CONDITIONS * (SEE COMMENTS)
☐ DENIED (SEE COMMENTS)

AUTHORIZED BY:
NAME: Omar Almouslli
TITLE: Mgr, OCC EHS
SIGNATURE: Almouslli
DATE: 8.1.18

COMMENTS: This approval does not apply to caulking materials around exterior doors and windows. Caulking tested positive for Asbestos

* ***ALL WORK THAT MAY DISTURB THESE MATERIALS MUST BE PERFORMED BY PROPERLY TRAINED, EQUIPPED AND LICENSED PERSONNEL EMPLOYING PREVIOUSLY APPROVED WORK PROCEDURES.***

SEND THIS FORM TO: ASBESTOS/LEAD(Pb)/MOLD MANAGEMENT GROUP, BUILDING SERVICES DEPARTMENT
TELEPHONE 974 9187 OR 974-7154

FORM ASB 09.30.15

AFD 3 Lead Study

LEAD

CITY OF AUSTIN

~~ASBESTOS~~ **WORK REQUEST** TO AVOID DISTURBING POTENTIAL ASBESTOS CONTAINING BUILDING MATERIALS

NOTE: A WORK REQUEST OR AN ASBESTOS INSPECTION REQUEST MUST BE SUBMITTED FOR ALL RENOVATION, REMODELLING, DEMOLITION OR MAINTENANCE WORK WHETHER OR NOT ASBESTOS CONTAINING MATERIALS MIGHT BE DISTURBED. THE REQUEST FORM MUST BE RECEIVED AND APPROVED BEFORE ANY WORK CAN BE PERFORMED. THIS FORM SHOULD BE USED FOR PROJECTS WHICH DO NOT EXCEED THAT WORK THAT CAN BE DONE BY ONE WORKER IN ONE WORKING DAY. FOR LARGER PROJECTS USE THE ASBESTOS INSPECTION REQUEST FORM

DATE OF REQUEST: 03/29/2018
DEPARTMENT / DIVISION: Austin Fire Department
NAME OF PROJECT: Fire Station #3 Bay Replacement
NAME OF REQUESTER: Alejandro Wolniewitz
TITLE: Project Manager
TELEPHONE NUMBER: 512/974-1286 FAX NUMBER:
SIGNATURE:

☐ EMERGENCY DECLARATION
ATTACH AFFIDAVIT

FOR ASBESTOS/LEAD(Pb)/MOLD MGMT GROUP USE
DATE RECEIVED 3.29.18
REQUEST NUMBER 18204L
PRIORITY RATING 2
INSPECTION SCHEDULED FOR
INSPECTION BY

AREA IN WHICH WORK IS TO TAKE PLACE:
STREET ADDRESS: 201 W. 30th St
AREA OF BUILDING: Engine bays & drive
REQUESTED START WORK DATE: August , 2018 ANTICIPATED WORK FINISH DATE: February, 2019
PLEASE ATTACH A FLOOR PLAN NO LARGER THAN 11" by 17" INDICATING LOCATION OF WORK

DESCRIPTION OF WORK TO BE DONE: (IF ADDITIONAL SPACE IS NEEDED, CONTINUE ON SEPARATE SHEET)

Demolition and replacement of engine bays (garage); other station facilities to remain including joint wall.

DESCRIPTION OF BUILDING MATERIALS THAT MIGHT BE DISTURBED: (INCLUDE LOCATION AND TYPE OF MATERIALS)
(IF ADDITIONAL SPACE IS NEEDED, CONTINUE ON SEPARATE SHEET)

All items located in the existing engine bays - Concrete foundation and slabs, masonry walls, metal deck and roofing, electrical, heating and ventilation systems, minor drywall.

PRIORITY OF PROJECT: THERE IS A LIMITED NUMBER OF RESOURCES AVAILABLE FOR INSPECTIONS. IF AN INSPECTION IS NEEDED, DESCRIBE HOW SOON THE WORK MUST BE DONE AND WHAT COULD HAPPEN IF THE WORK WERE NOT DONE WITHIN THE INDICATED TIME

☐ 1 WEEK TO 1 MONTH ☑ 1 TO 3 MONTHS ☐ 3 TO 6 MONTHS ☐ OVER 6 MONTHS
☐ OTHER
COMMENTS: This is considered an urgent project as the current slabs are failing and AFD equipment has been forced to park outside in the weather.

CONTACT PERSON: IDENTIFY A PERSON WHO WILL BE AVAILABLE TO ANSWER QUESTIONS ABOUT THIS PROJECT AND CAN MAKE ARRANGEMENTS TO HAVE THE BUILDING ACCESSIBLE TO AN INSPECTOR
NAME: Alejandro Wolniewitz
TELEPHONE NUMBER: 512/974-1286 FAX NUMBER:

(THIS AREA TO BE USED BY THE ASBESTOS/ LEAD(Pb)/MOLD MANAGEMENT GROUP)
APPROVAL
☐ GRANTED WITHOUT CONDITIONS
☑ GRANTED WITH CONDITIONS * (SEE COMMENTS)
☐ DENIED (SEE COMMENTS)

AUTHORIZED BY:
NAME: Omar Almousli
TITLE: Mgr, OCC EHS
SIGNATURE:
DATE: 8.1.18

COMMENTS: Almost every painted surface tested positive for lead. Please contact ALMMG before disturbing painted surfaces.

* ***ALL WORK THAT MAY DISTURB THESE MATERIALS MUST BE PERFORMED BY PROPERLY TRAINED, EQUIPPED AND LICENSED PERSONNEL EMPLOYING PREVIOUSLY APPROVED WORK PROCEDURES.***

SEND THIS FORM TO: ASBESTOS/LEAD(Pb)/MOLD MANAGEMENT GROUP, BUILDING SERVICES DEPARTMENT
TELEPHONE. 974-9187 OR 974-7154

FORM ASB 09.30.15

AFD 22 / EMS 12 Asbestos Study

CITY OF AUSTIN

ASBESTOS WORK REQUEST TO AVOID DISTURBING POTENTIAL ASBESTOS CONTAINING BUILDING MATERIALS

NOTE: A WORK REQUEST OR AN ASBESTOS INSPECTION REQUEST MUST BE SUBMITTED FOR ALL RENOVATON, REMODELLING, DEMOLITION OR MAINTENANCE WORK WHETHER OR NOT ASBESTOS CONTAINING MATERIALS MIGHT BE DISTURBED. THE REQUEST FORM MUST BE RECEIVED AND APPROVED BEFORE ANY WORK CAN BE PERFORMED. THIS FORM SHOULD BE USED FOR PROJECTS WHICH DO NOT EXCEED THAT WORK THAT CAN BE DONE BY ONE WORKER IN ONE WORKING DAY. FOR LARGER PROJECTS, USE THE ASBESTOS INSPECTION REQUEST FORM

DATE OF REQUEST: 03/29/2018
DEPARTMENT / DIVISION: Austin Fire Department
NAME OF PROJECT: Fire Station #22 Bay Replacement
NAME OF REQUESTER: Alejandro Wolniewitz
TITLE: Project Manager
TELEPHONE NUMBER: 512/974-1286 FAX NUMBER:
SIGNATURE:

☐ EMERGENCY DECLARATION
ATTACH AFFIDAVIT

FOR ASBESTOS/LEAD(Pb)/MOLD MGMT GROUP USE
DATE RECEIVED: 3/29/18
REQUEST NUMBER: 18247
PRIORITY RATING: 191
INSPECTION SCHEDULED FOR:
INSPECTION BY:

AREA IN WHICH WORK IS TO TAKE PLACE:
STREET ADDRESS: 5309 Riverside
AREA OF BUILDING: Engine bays & drive
REQUESTED START WORK DATE: August , 2018 ANTICIPATED WORK FINISH DATE: February, 2019
PLEASE ATTACH A FLOOR PLAN NO LARGER THAN 11" by 17" INDICATING LOCATION OF WORK

DESCRIPTION OF WORK TO BE DONE: (IF ADDITIONAL SPACE IS NEEDED, CONTINUE ON SEPARATE SHEET)

Demolition and replacement of engine bays (garage); other station facilities to remain including joint wall.

DESCRIPTION OF BUILDING MATERIALS THAT MIGHT BE DISTURBED: (INCLUDE LOCATION AND TYPE OF MATERIALS)
(IF ADDITIONAL SPACE IS NEEDED, CONTINUE ON SEPARATE SHEET)

All items located in the existing engine bays - Concrete foundation and slabs, masonry walls, metal deck and roofing, electrical, heating and ventilation systems, minor drywall.

PRIORITY OF PROJECT: THERE IS A LIMITED NUMBER OF RESOURCES AVAILABLE FOR INSPECTIONS. IF AN INSPECTION IS NEEDED, DESCRIBE HOW SOON THE WORK MUST BE DONE AND WHAT COULD HAPPEN IF THE WORK WERE NOT DONE WITHIN THE INDICATED TIME.

☐ 1 WEEK TO 1 MONTH ☑ 1 TO 3 MONTHS ☐ 3 TO 6 MONTHS ☐ OVER 6 MONTHS
☐ OTHER
COMMENTS: This is considered an urgent project as the current slabs are failing and AFD equipment has been forced to park outside in the weather.

CONTACT PERSON: IDENTIFY A PERSON WHO WILL BE AVAILABLE TO ANSWER QUESTIONS ABOUT THIS PROJECT AND CAN MAKE ARRANGEMENTS TO HAVE THE BUILDING ACCESSIBLE TO AN INSPECTOR.
NAME: Alejandro Wolniewitz
TELEPHONE NUMBER: 512/974-1286 FAX NUMBER:

(THIS AREA TO BE USED BY THE ASBESTOS/LEAD(Pb)/MOLD MANAGEMENT GROUP)

APPROVAL
☐ GRANTED WITHOUT CONDITIONS
☑ GRANTED WITH CONDITIONS * (SEE COMMENTS)
☐ DENIED (SEE COMMENTS)

AUTHORIZED BY:
NAME: Omar Almousli
TITLE: Asbestos Inspector/PM
SIGNATURE:
DATE: 5.14.18

COMMENTS: Although asbestos-containing vermiculite fill was not encountered in CMU wall cavitiss, Please avoid disturbing CMU walls.

* ***ALL WORK THAT MAY DISTURB THESE MATERIALS MUST BE PERFORMED BY PROPERLY TRAINED, EQUIPPED AND LICENSED PERSONNEL EMPLOYING PREVIOUSLY APPROVED WORK PROCEDURES.***

SEND THIS FORM TO: ASBESTOS/LEAD(Pb)/MOLD MANAGEMENT GROUP, BUILDING SERVICES DEPARTMENT
TELEPHONE: 974 9187 OR 974-7154

FORM ASB 09 30 15

AFD 22 / EMS 12 Lead Study

LEAD

CITY OF AUSTIN

WORK REQUEST TO AVOID DISTURBING POTENTIAL ASBESTOS CONTAINING BUILDING MATERIALS

NOTE: A WORK REQUEST OR AN ASBESTOS INSPECTION REQUEST MUST BE SUBMITTED FOR ALL RENOVATION REMODELLING, DEMOLITION OR MAINTENANCE WORK WHETHER OR NOT ASBESTOS CONTAINING MATERIALS MIGHT BE DISTURBED THE REQUEST FORM MUST BE RECEIVED AND APPROVED BEFORE ANY WORK CAN BE PERFORMED THIS FORM SHOULD BE USED FOR PROJECTS WHICH DO NOT EXCEED THAT WORK THAT CAN BE DONE BY ONE WORKER IN ONE WORKING DAY FOR LARGER PROJECTS USE THE ASBESTOS INSPECTION REQUEST FORM

DATE OF REQUEST: 03/29/2018
DEPARTMENT / DIVISION: Austin Fire Department
NAME OF PROJECT: Fire Station #22 Bay Replacement
NAME OF REQUESTER: Alejandro Wolniewitz
TITLE: Project Manager
TELEPHONE NUMBER: 512/974-1286 FAX NUMBER
SIGNATURE:

☐ EMERGENCY DECLARATION
ATTACH AFFIDAVIT

FOR ASBESTOS/LEAD(Pb)/MOLD MGMT GR P USE
DATE RECEIVED 3/29/18
REQUEST NUMBER 18254L
PRIORITY RATING 191
INSPECTION SCHEDULED FOR
INSPECTION BY

AREA IN WHICH WORK IS TO TAKE PLACE:
STREET ADDRESS: 5309 Riverside
AREA OF BUILDING: Engine bays & drive
REQUESTED START WORK DATE: August , 2018 ANTICIPATED WORK FINISH DATE: February, 2019
PLEASE ATTACH A FLOOR PLAN NO LARGER THAN 11" by 17" INDICATING LOCATION OF WORK

DESCRIPTION OF WORK TO BE DONE: (IF ADDITIONAL SPACE IS NEEDED, CONTINUE ON SEPARATE SHEET)

Demolition and replacement of engine bays (garage); other station facilities to remain including joint wall.

DESCRIPTION OF BUILDING MATERIALS THAT MIGHT BE DISTURBED: (INCLUDE LOCATION AND TYPE OF MATERIALS)
(IF ADDITIONAL SPACE IS NEEDED, CONTINUE ON SEPARATE SHEET)

All items located in the existing engine bays - Concrete foundation and slabs, masonry walls, metal deck and roofing, electrical, heating and ventilation systems, minor drywall.

PRIORITY OF PROJECT: THERE IS A LIMITED NUMBER OF RESOURCES AVAILABLE FOR INSPECTIONS IF AN INSPECTION IS NEEDED, DESCRIBE HOW SOON THE WORK MUST BE DONE AND WHAT COULD HAPPEN IF THE WORK WERE NOT DONE WITHIN THE INDICATED TIME

☐ 1 WEEK TO 1 MONTH ☑ 1 TO 3 MONTHS ☐ 3 TO 6 MONTHS ☐ OVER 6 MONTHS
☐ OTHER
COMMENTS: This is considered an urgent project as the current slabs are failing and AFD equipment has been forced to park outside in the weather.

CONTACT PERSON: IDENTIFY A PERSON WHO WILL BE AVAILABLE TO ANSWER QUESTIONS ABOUT THIS PROJECT AND CAN MAKE ARRANGEMENTS TO HAVE THE BUILDING ACCESSIBLE TO AN INSPECTOR
NAME: Alejandro Wolniewitz
TELEPHONE NUMBER: 512/974-1286 FAX NUMBER:

(THIS AREA TO BE USED BY THE ASBESTOS/ LEAD(Pb)/MOLD MANAGEMENT GROUP)
APPROVAL
☐ GRANTED WITHOUT CONDITIONS
☑ GRANTED WITH CONDITIONS * (SEE COMMENTS)
☐ DENIED (SEE COMMENTS)
COMMENTS: All paint on metal doors contain lead. Please recycle the metal doors.

AUTHORIZED BY:
NAME: Omar Almonsli
TITLE: Project Manager
SIGNATURE:
DATE: 5.16.18

* ***ALL WORK THAT MAY DISTURB THESE MATERIALS MUST BE PERFORMED BY PROPERLY TRAINED, EQUIPPED AND LICENSED PERSONNEL EMPLOYING PREVIOUSLY APPROVED WORK PROCEDURES.***

SEND THIS FORM TO: ASBESTOS/LEAD(Pb)/MOLD MANAGEMENT GROUP, BUILDING SERVICES DEPARTMENT
TELEPHONE 974 9187 OR 974-7154

FORM ASB 09 30 15

Fuel Station

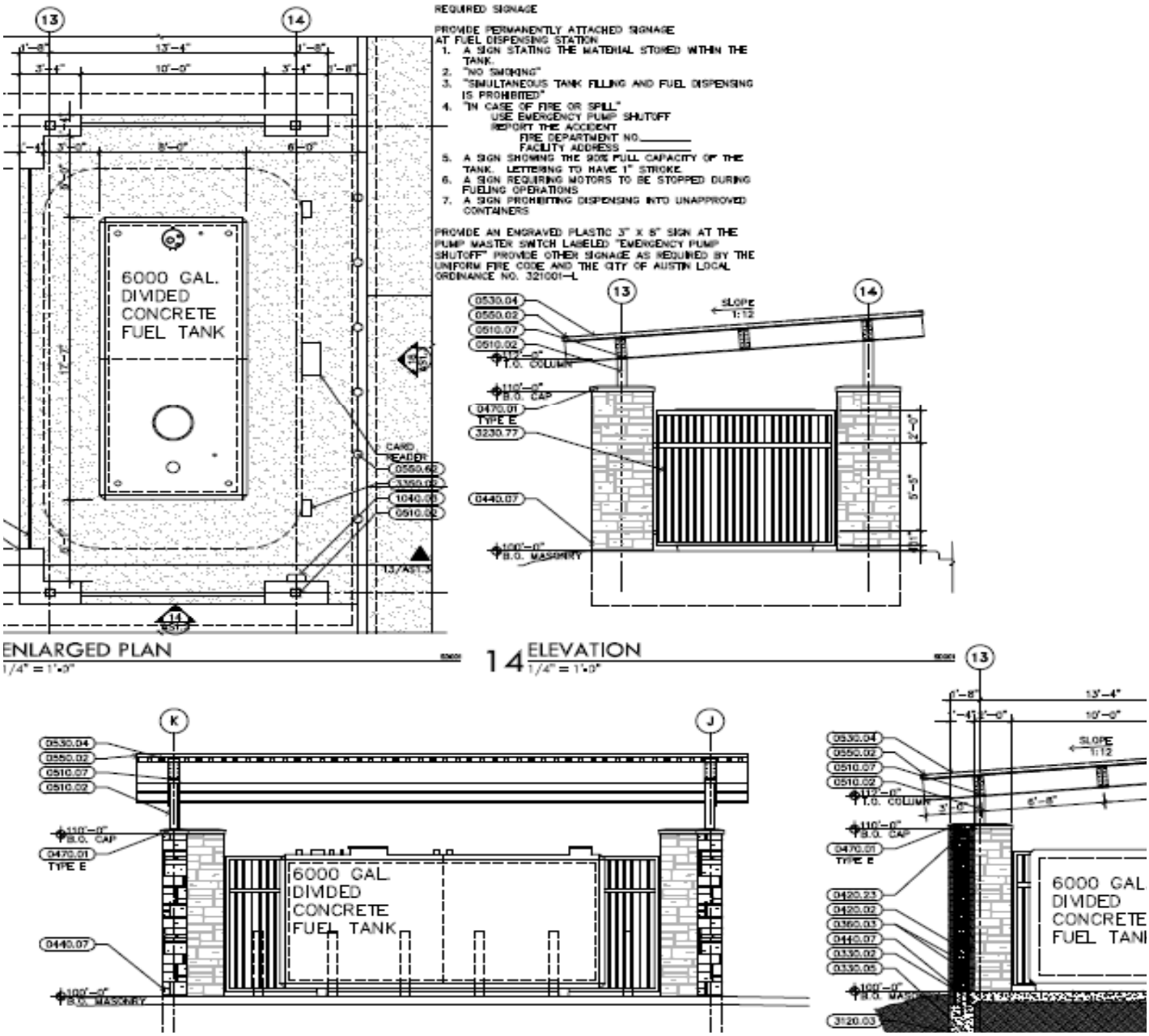

Structural Investigations & Geotech Report

The following City of Austin documents are included in this Appendix:

All Stations

1. **AFD 3 and AFD 22 / EMS 12 Summary Report - Ph. 1**
2. **AFD 3 and AFD 22 / EMS 12 Summary Report - Ph. 2**
3. **City Engineer letter from Forensic Study**
4. **AFD 3 and AFD 22 / EMS 12 Geotech Report**

Austin, TX Office:

3737 Executive Center Drive, Suite 255
Austin, TX 78731-1633
P: 512-219-4075 F: 512-219-4077

May 12, 2017

Mr. Karim Helmi
City of Austin – Public Works Department
Quality Management Division
105 Riverside Drive, Suite 100
Austin, TX 78704

Phone: 512-974-6539
Email: Karim.Helmi@austintexas.gov

Summary Report
Structural Floor System Capacity Assessment – Austin Fire Department
Fire Station No. 3 – 201 W. 30th St., Austin, TX
Fire Station No. 22 – 5309 E. Riverside Dr., Austin, TX
CTLGroup Project No. 231701

Dear Mr. Helmi:

As authorized by the City of Austin (COA), CTLGroup has completed an as-built assessment of the garage-area structural floor systems at Austin Fire Department Stations No. 3 and No. 22. The Austin Fire Department plans to operate certain vehicles in and out of each fire station garage and is concerned about the weight of the vehicles. The COA requested that the floor systems be evaluated to determine if their structural capacities are adequate to support the loads from these vehicles.

As part of this work, CTLGroup performed an on-site evaluation of each fire station that consisted of the following:

- Documenting the layouts and dimensions of the garage areas, including the structural elements of the floor systems
- Performing ground penetrating radar (GPR) scans to evaluate member/slab thicknesses, the general layout of embedded reinforcing steel, and to estimate the concrete cover over embedded reinforcing steel in a limited number of representative areas
- Performing localized concrete removal in a limited number of representative areas to verify GPR findings and evaluate reinforcing steel bar dimensions through direct measurements
- Extracting concrete core samples in a limited number of representative areas

In addition to the on-site evaluations, compressive strength tests were performed by CTLGroup's laboratory on the extracted core samples. Based on the results of our on-site evaluations and laboratory testing, structural analyses were performed on the garage-area structural floor systems. This report summarizes CTLGroup's findings.

ONSITE EVALUATIONS

CTLGroup's site visits were conducted on February 22-24, 2017 (Fire Station No. 22) and March 6-7, 2017 (Fire Station No. 3). The following CTLGroup staff members were present during the site visits: Bradley East, P.E. and Jon Poole, Ph.D., P.E. Various Austin Fire Department personnel were present during CTLGroup's site visits.

NON-DESTRUCTIVE TESTING AND LOCALIZED DESTRUCTIVE TESTING

Ground Penetrating Radar (GPR) is a nondestructive test method that employs high-frequency electromagnetic energy that can assess a variety of characteristics when applied to concrete structures. GPR surveys performed on concrete elements allow for the detection of embedded objects (steel reinforcement, prestressing/post-tensioning strand, conduit, and other embedded items), material interfaces, and internal discontinuities such as voiding. The technique involves the use of a high-frequency radar antenna which transmits electromagnetic radar pulses along a longitudinal scan at the surface of a structural element. Electromagnetic signals are optically reflected from material interfaces of varying dielectric constant along the propagation path of the wave. The reflected signals are collected by the antenna, amplified and displayed for subsequent interpretation.

GPR is commonly used to determine the location and depth of reinforcing bars in concrete structures. The contrast between the electromagnetic properties of embedded steel and that of cured concrete provides a distinct direct reflection from the reinforcing bars. The magnitude and phase of these reflections are analyzed to determine the location of the reinforcement.

During CTLGroup's site visit, GPR scans were performed on the structural floor systems at each fire station. The depth and distribution of the lateral, longitudinal, and/or vertical reinforcement were noted. A StructureScan Mini HR with a 2600 MHz antenna manufactured by Geophysical Survey Systems, Inc. (GSSI) was used on this project.

Localized destructive testing was also performed on the structural floor systems at each fire station at representative locations. Concrete was removed using a hammer drill with a chipping bit to confirm cover depths and determine steel reinforcing bar sizes. Following completion of the localized destructive testing, the chipped concrete was patched by CTLGroup using a non-shrink grout material.

The as-built reinforcing details are discussed further in the **General Observations and As-Built Findings** section of this report.

CONCRETE CORING

Core samples were extracted from the structural floor systems at each fire station by Texas Cutting and Coring, L.P. Cores were obtained for compressive strength testing. Several cores were also purposely taken through steel reinforcing bars to further confirm cover depths and bar sizes.

The cores were extracted in general accordance with ASTM C42[1]. The core locations are shown on the plan views of each garage in **Appendix A**. At Fire Station No. 22, cores were taken vertically (top down) through the topping slab and joists from the interior of the garage. Cores were also taken horizontally through the beams from within the crawlspace. The joist/slab cores measured nominal 2.0 in. or 1.5 in. diameter. The beam cores measured nominal 4.0 in. diameter. At Fire Station No. 3, all cores were taken vertically (top down) through the slab and beams from the interior of the garage. The slab/beam cores measured nominal 3.0 in. diameter. The core holes were patched by CTLGroup using a non-shrink grout material after coring operations were completed.

The concrete core samples were placed in plastic bags and packaged for shipment. The cores were shipped to CTLGroup's Skokie, IL Laboratory at the completion of each on-site assessment. Note that the time from when the cores were extracted to the time of testing varied from the requirements in ASTM C42 (testing no more than 7 days after extraction). It is CTLGroup's opinion that this variance does not significantly affect the findings in this report.

GENERAL OBSERVATIONS AND AS-BUILT FINDINGS

The interiors and exteriors of each Fire Station were visually evaluated. The undersides of the structural floor systems were also evaluated from within the crawlspaces beneath each Fire Station. The crawlspaces were accessible through entry at the exterior of each building.

Fire Station No. 22

CTLGroup was provided with Structural Sheets S1 and S2 for Fire Station No. 22. Included on the sheets were structural notes, plan views, and cross-section details of various elements. It was found that the layout and subsequent plan dimensions of Fire Station No. 22 generally matched the information on the plans. For reference purposes, Structural Sheets S1 and S2 can be found in **Appendix A** at the end of this report.

For directional references in this report, the front elevation of Fire Station No. 22 faced **east**. The garage structural floor system consisted of precast reinforced concrete joists that spanned between pier-supported reinforced concrete beams. The joists were oriented north-south and were bearing into the sides of the beams. The beams at the garage area were situated along the north and south ends of the garage and along the middle of the garage. The finished floor of the garage consisted of a concrete topping slab, which had been placed over the joists. General views of the garage from both the interior and crawlspace can be seen in Figures B1 and B2 in **Appendix B**.

The beams were generally rectangular in shape and it was found that the beam dimensions and steel reinforcing details generally matched the measurements/information given on Structural Sheets S1 and S2. Refer to **Appendix A** for cross-section details of the beams and the beam schedule.

---

[1] ASTM C42 "Standard Test Method for Obtaining and Testing Drilled Cores and Sawed Beams of Concrete"

To summarize, the north beam had cross-section dimensions of 14 in. by 36 in. The reinforcement in the north beam consisted of four (4) #9 bars along both the top and bottom of the member. The middle beam had cross-section dimensions of 48 in. by 23 in. The reinforcement in the middle beam consisted of 10 #8 bars along both the top and bottom of the member. The south beam had cross-section dimensions of 36 in. by 23 in. The reinforcement in the south beam consisted of eight (8) #8 bars along both the top and bottom of the member.

The joists were inverted U-shaped. The overall cross-section dimensions of the joists measured approximately 13.75 in. tall by 31.5 in. wide. The top flange thickness measured approximately 1.5 in. The side webs tapered in thickness. The top of the webs (directly beneath the flange) measured approximately 4.25 in. thick. The bottom of the webs measured approximately 3.5 in. thick. The topping slab over the joists measured approximately 3.5 in. thick. A cross-section drawing of the joists can be found in **Appendix A**.

The reinforcement in the joists consisted of a 10 gauge 6x6 welded wire reinforcement (WWR) which was located at mid-height of the top flange. Steel reinforcing bars were also detected in the webs. This includes one (1) #4 bar in each web approximately 2 in. from the top of the member and one (1) #6 bar in each web approximately 0.75 in. from the bottom of the member.

Cracks were observed in the topping slab, as viewed from the interior of the garage (Figures B3 and B4). Cracks were generally evenly spaced transverse to the beams in the north-south direction at approximately 5-6-ft. on-center. Longitudinal cracks were also observed in the topping slab. The longitudinal cracks were situated at mid-span between the beams and approximately above both vertical edges of the middle beam. The largest crack widths measured approximately 0.05 in. The approximate locations of the cracking in the topping slab are shown on the plan view of the garage in **Appendix A**.

Visible portions of the beams and joists were in good condition, as viewed from within the crawlspace. No cracks were found in the beams or joists.

Fire Station No. 3

For directional references in this report, the front elevation of Fire Station No. 3 faced **north**. As of this writing, no construction drawings were found for this fire station. As a result, the plan layout and dimensions of the garage area, including the locations of the structural floor system elements, were identified during CTLGroup's site visit. The plan view of the garage area at Fire Station No. 3 can be found in **Appendix A**. General views of the garage from both the interior and crawlspace can be seen in Figures B5 and B6.

The garage structural floor system consisted of a monolithic cast-in-place reinforced concrete slab over pier-supported reinforced concrete beams. Beams were oriented north-south approximately beneath the middle of each garage bay, and along the west end of the garage area. The cross-section dimensions of the middle beams measured approximately 5 in. deep (as measured from the underside of the slab) by 36 in. wide. The cross-section dimensions of the west beam measured approximately 14.5 in. deep (as measured from the underside of the slab) by 12 in. wide.

Based on CTLGroup's GPR scans and localized destructive testing, the longitudinal reinforcing steel in the middle beam consisted of five (5) #8 bars in the bottom of the member approximately 1.5 in. from the bottom surface. Six (6) #8 bars were also detected in the top of the member approximately 2.5 in. from the top surface. The longitudinal reinforcing steel in the

west beam consisted of three (3) #6 bars in the bottom of the member approximately 1.5 in. from the bottom surface. The west perimeter wall of the garage was situated directly on top of the west beam. As a result, CTLGroup was unable to confirm the reinforcing layout and size in the top of the west beam.

The garage floor consisted of a steel reinforced concrete slab. The slab thickness throughout the garage area measured approximately 5.5 in. thick. There was no topping slab placed over the structural slab system.

Based on CTLGroup's GPR scans and localized destructive testing, longitudinal and transverse steel were detected in the concrete slab. The longitudinal steel (i.e. north-south steel) consisted of #3 bars spaced approximately 12 in. on-center. The longitudinal steel was located at a depth of approximately 4 in. from the top surface of the slab. Transverse steel consisted of a bottom layer of continuous #4 steel bars spaced approximately 8 in. on-center. The bottom layer of transverse steel was located a depth of approximately 4.5 to 4.75 in. from the top surface of the slab. A top transverse layer of reinforcement was also detected in the slab over the beams. The top reinforcement in the slab was not continuous across the full width of the garage. The top layer of transverse steel was located approximately 1.5 in. from the top surface and consisted of #4 bars spaced approximately 8 in. on-center.

The cross-section details of the beams and slab can be found in **Appendix A**.

Cracks were observed in the top of the slab, as viewed from the interior of the garage (Figure B7). Cracks were oriented transverse across the floor slab. The spacing of the transverse cracks varied throughout. Longitudinal cracking was also observed. The longitudinal cracks were generally aligned above the sides/edges of both beams. The largest crack widths measured approximately 0.06 in.

Transverse cracks were also observed in the underside of the slab, as viewed from within the crawlspace (Figure B8). The cracks appeared to originate adjacent to the column-to-beam supports. The visible portions of the beams were in good condition, as viewed from within the crawlspace. A diagonal crack was observed in the west beam above the first column from the north end of the garage (Figure B9). No other cracks were found in the beams.

Horizontal cracks were observed in the columns (Figure B10). The cracks were generally located in the top portions of the columns, beneath the underside of the beams.

Horizontal cracks were found in the foundation walls directly beneath the middle beams at both the north and south ends of the west garage bay and at the south end of the east garage bay (Figure B11). Diagonal cracks were also observed in the walls at these locations adjacent to the beams (refer to B11). A similar diagonal crack was found in the foundation wall at the northwest corner of the garage. Additional cracks were observed in the foundation walls. This includes the following: vertical cracks in the east wall directly above the first and second piers from the northeast corner, vertical crack at the northwest corner directly below the north end of the west beam, and a vertical crack at the southwest corner.

The approximate locations of the above discussed cracking in the slab, columns and foundation walls can be found on the plan view of the garage in **Appendix A**.

The underside of the slab was spalled at several locations (Figure B12). At several spalled areas, the reinforcing steel was exposed and was visibly corroded/rusted.

SUMMARY OF LABORATORY TESTING

Compressive strength testing was performed on select core samples from each fire station in general accordance with ASTM C42. At Fire Station No. 22, compressive strength tests were performed on samples C1 (topping slab), C2 (topping slab), C4 (topping slab and joist), C4A (topping slab and joist), C5 (beam), C6 (beam), and C7 (beam). At Fire Station No. 3, compressive strength tests were performed on samples C1 (slab/beam), C2 (slab/beam), and C3 (slab/beam). Prior to testing, each core sample was capped with a sulfur capping compound (meeting the requirements of ASTM C617[2]), and placed in bags for 5 days.

The average concrete core compressive strengths of the structural floor system elements at each fire station are summarized below in Table 1. The average core strengths in Table 1 were used in the structural analyses of the fire station floor systems (unless noted otherwise in the **Structural Analyses** section of this report).

Table 1 – Summary of average core compressive strengths

Element		Average Core Compressive Strength (psi)
Fire Station No. 22	Topping Slab	5188
	Joists	6850
	Beams	5300
Fire Station No. 3	Slab/Beams	3767

CTLGroup's compressive strength testing reports can be found in **Appendix C** at the end of this report.

STRUCTURAL ANALYSES

Structural analyses were performed on the floor systems at both fire station garages. The purpose of the structural analyses was to determine the capacities of the structural floor system elements and to determine if the floors are adequate to support the anticipated vehicular loads. The capacities of the structural floor system elements were calculated in general accordance with ACI 318[3] ultimate strength design method (USD).

The loads considered in the structural analyses included the self-weight of the concrete elements and the gross weight of the fire trucks. Two (2) different fire trucks were considered for the analysis of each fire station floor system. The fire trucks considered for the analysis of Fire Station No. 3 included a Pierce Impel Pumper (Job No. 25403) and a Pierce 105' Heavy Duty Aerial Ladder with water tank (Job No. 27566). The fire trucks considered for the analysis of Fire Station No. 22 included a Pierce Impel Pumper (Job No. 25403) and a Pierce 105' Heavy Duty Aerial Ladder without water tank (Job No. 13122). Provided specifications for these vehicles, including dimensions and weights that were used in our analyses can be found in **Appendix D**.

---

[2] ASTM C617 "Standard Practice for Capping Cylindrical Concrete Specimens"
[3] ACI 318 "Building Code Requirements for Structural Concrete"

Several liberal assumptions were made during the analyses. It should be noted that these liberal assumptions were purposely made to study whether the floor systems could support the new vehicular loads in a favorable condition. These liberal assumptions generally decreased the calculated demand on the elements and increased the calculated capacity of the elements. These liberal assumptions will be replaced by conservative assumptions during retrofit design, if needed. Some of the liberal assumptions are as follows:

- The average concrete core strengths (as determined by CTLGroup laboratory testing) for the joists and slab at Fire Stations Nos. 22 and 3, respectively, were used in the analyses. No statistical adjustment, such as that in accordance with ACI 214.4R[4], was performed on the core strength values. Considering the scatter of test data, the usable concrete strength for structural analysis is smaller than the average value. While concrete strength does not affect the moment capacity of a flexural member considerably, it affects the shear capacity of the flexural member more significantly. Therefore, using average concrete strength is a liberal assumption.

- Although vehicular loading was considered, an impact factor was not included in our analysis. Considering that even a gentle brake could result in some impact, this is a liberal assumption.

- At Fire Station No. 22, composite elastic behavior was assumed between the topping slab and joists. As a result, the vehicular loading was distributed amongst several adjacent joists, depending on the wheel locations. The load distribution was determined using elastic finite element analysis. Considering that concrete cracking would prevent as much distribution as calculated by elastic analysis, this is a liberal assumption.

- At Fire Station No. 22, adequate shear transfer was assumed between the topping slab and joists. As a result, the joists and slab were assumed to provide composite action. The composite member was favorably assumed to have a concrete compressive strength equal to the average of the core strengths of the joists (approximately 6.85 ksi). For comparison purposes, the average of the core strengths of the topping slab was 5.19 ksi.

- The rear axle of the Aerial Ladder truck is a tandem axle and therefore consists of two (2) sets of parallel tires. During our analysis of the slab at Fire Station No. 3, loading from only one (1) set of the tandem rear axle tires was considered. This is a liberal assumption that reduces the demand on the slab. It should be noted that the per tire weight of the rear wheels of both the Aerial Ladder and Impel Pumper vehicles are equal. The rear axle of the Impel Pumper vehicle is not a tandem axle and because only one (1) set of the tandem rear axle tires was considered for the Aerial Ladder vehicle, the calculated demands placed on the slab at Fire Station No. 3 were identical for both vehicles.

Some additional assumptions are as follows:

- As previously discussed, the joists at Fire Station No. 22 were bearing into the sides of the beams. CTLGroup found no evidence to indicate that there were any tie-bars (or similar) connecting the joists to the beams. As a result, the joists were assumed to be simply supported.

---

[4] ACI 318 "Building Code Requirements for Structural Concrete"

- A vertical WWR was found in the webs of the joists at Fire Station No. 22. CTLGroup found no evidence to indicate that the vertical mesh was tied to the longitudinal steel. As a result, it was assumed that the vertical mesh in the joists did not provide shear resistance.
- Using AASHTO Standard Specifications for Highway Bridges as a guide, it was assumed that the effective slab width at Fire Station No. 3 was approximately 8-ft.

It was determined during our analyses that the precast joists at Fire Station No. 22 and the floor slab at Fire Station No. 3 do not have the necessary capacity to support the appropriate Aerial Ladder truck or the Impel Pumper truck. The joists and slab were analyzed for both shear and moment/flexure. Tables 2 to 4 below summarize the capacities of the joists and slab, the load demands placed on these elements, and the Demand Capacity Ratios (DCR). It should be noted again that these DCRs are for a set of favorable assumptions and the actual DCRs would be higher.

Table 2 – Joist and Slab Capacities at Fire Station Nos. 22 and 3

Element		Capacities		
		Shear (kips)	Positive Moment (k-ft)	Negative Moment (k-ft)
Fire Station No. 22	Joists	13.6	52.4	N/A
Fire Station No. 3	Slab	34.2	34.2	26.9

Table 3 – Joist and Slab Demands at Fire Station Nos. 22 and 3

Element		Demands					
		Impel Pumper			Aerial Ladder		
		Shear (kips)	Positive Moment (k-ft)	Negative Moment (k-ft)	Shear (kips)	Positive Moment (k-ft)	Negative Moment (k-ft)
Fire Station No. 22	Joists	14.0	47.3	N/A	19.8	66.8	N/A
Fire Station No. 3	Slab	32.0	54.6	52.0	32.0	54.6	52.0

Table 3 – Joist and Slab Demands Capacity Ratios (DCR) at Fire Station Nos. 22 and 3

Element		Demands					
		Impel Pumper			Aerial Ladder		
		Shear (kips)	Positive Moment (k-ft)	Negative Moment (k-ft)	Shear (kips)	Positive Moment (k-ft)	Negative Moment (k-ft)
Fire Station No. 22	Joists	1.03	0.90	N/A	1.46	1.27	N/A
Fire Station No. 3	Slab	0.94	1.60	1.93	0.94	1.60	1.93

The City of Austin has requested a remedial design repair be developed to strengthen the existing floor systems, because of the analyses discussed above showing that the joists at Fire Station No. 22 and the floor slab at Fire Station No. 3 lack adequate strength. This work will be performed as part of Phase 2 of this project. As of the date of this report, the Phase 2 proposal is being prepared and it is anticipated that it will be submitted to the City of Austin for review by the week of May 19, 2017. Because analyses indicated that the joists and slab are inadequate, a hold was placed on further analyses. As a result, the beams at each fire station have not yet been evaluated. Since additional analyses will be required as part of Phase 2, analysis of the beams will be included as part of this work.

DISCUSSION AND RECOMMENDATIONS

Based on CTLGroup's as-built assessment and subsequent structural analyses, the joists and slab at Fire Station Nos. 22 and 3, respectively, lack adequate strength for the anticipated vehicular loads. The City of Austin was notified of these findings via phone after the completion of each analysis. An email was also sent to the City of Austin regarding the deficiency of the slab at Fire Station No. 3 on April 26, 2017. It is strongly recommended that the aerial ladder trucks not be operated in and out of the garages at Fire Station Nos. 22 and 3. It is also strongly recommended that the impel pumper not be operated in and out of the garage at Fire Station No. 3.

It is our understanding that the aerial ladder truck was in use at Fire Station No. 3 (prior to our findings), so risk of catastrophic failure (i.e. collapse) is likely minimal. It is plausible that the truck alignment when entering the bay of the garage generally forces the alignment of the truck tires directly over the supporting beams. This likely lessens the loading on the slab. However, misalignment of the truck could cause a failure of the slab. As a safety precaution, this vehicle should no longer be parked in this fire station.

The longitudinal cracking in the top of the slab at Fire Station No. 3 may have been caused by negative moment flexural cracking at the slab-to-beam interface, which is further evidence that the slab at this garage may have been overloaded. However, restraint shrinkage may have also caused/contributed to the longitudinal cracking. Restrained shrinkage of the slab is also likely the cause of the observed transverse cracking

The cracking at Fire Station No. 22 was limited to the topping slab. Considering the generally even spacing of the cracks, this cracking has most likely been caused by drying shrinkage and/or thermal movement. This cracking is not a structural concern, especially since no cracks were found in the joists or beams when viewed from within the crawlspace.

Based on CTLGroup's structural analyses and on-site observations, we propose the following recommendations:

- Prior to preparing a remedial repair design, petrographic examination should be performed on the cores that were taken during our initial site visits to ensure that the existing concrete is of adequate quality. This includes determining the carbonation depths. The spalled and corroded reinforcement on the underside of the slab at Fire Station No. 3 is indicative of damage due to carbonation. Based on the petrographic findings, concrete repairs may also be needed in addition to the strengthening of each garage floor system.

- To reduce the scatter of core strength data which would allow for the use of a higher compressive strength for the concrete during retrofit design, a few additional core samples should be taken and tested from each fire station.
- The floor systems at each garage needs to be strengthened so that the aerial ladder and impel pumper vehicles could be safely operated in and out of the garages. Some potential repair options at each fire station are discussed below. It should be noted that these are preliminary options that are subject to change prior to issuance of our Phase 2 proposal. It should also be noted that the below repairs take into consideration that there is minimal clearance in each garage crawlspace and that it might be difficult to get large materials/equipment into the crawlspace at Fire Station No. 22.
    - **Fire Station No. 22:**

      Installation of fiber reinforced polymer (FRP) wrap at shear and positive moment regions of the joists may be considered. FRP is a common fabric material (typically glass or carbon) that is impregnated with epoxy and bonded to the concrete member to provide additional strength.

      Additional options such as external steel plate bonding to joists, concrete/steel jacketing of joists, casting an additional concrete overlay will be studied prior to issuance of our Phase 2 proposal.

      Depending on the repair option, anchors might also be driven into both the joists and slab layers to ensure composite action.

      Additionally, the cracks in the topping slab should be filled by epoxy injection and/or gravity feed to enhance durability.
    - **Fire Station No. 3:**

      Installation of FRP wraps at positive moment regions and FRP bars at negative moment regions of the slab may be considered.

      Additional options such as external steel plate bonding to beams, concrete/steel jacketing of beams, casting an additional concrete overlay will be studied prior to issuance of our Phase 2 proposal.

      Conventional steel reinforcement could also be added to the slab in the transverse direction at the negative moment regions. This will require that strips of concrete be removed from the top of the slab so that the reinforcement can be placed. The additional imbedded reinforcement would then be grouted or epoxied into the slab.
- The observed cracking in the foundation walls adjacent to the north and south ends of the beams at Fire Station No. 3 are concerning. These cracks should be further evaluated and the wall supports beneath the ends of the beams should be analyzed to ensure that they are adequate to support the anticipated loads. The foundation walls were not included as part of CTLGroup's Phase 1 scope.

CLOSING

Thank you for the opportunity to assist you on this project. Please do not hesitate to let me know if you have any questions or concerns, or need any additional information.

Bradley L. East, M.S., P.E.
Senior Engineer
BLEast@CTLGroup.com
P. 512-220-2137
M. 512-971-3911

STATE OF TEXAS
BRADLEY L. EAST
107268
LICENSED
PROFESSIONAL ENGINEER
5.12.17

cc: Hamid Lotfi, Ph.D., P.E. (CA), CTLGroup
Eric Vanduyne, P.E., S.E. (IL), CTLGroup
Jon Poole, Ph.D., P.E. (TX), CTLGroup

Appendix A

Plan Views and Cross-Section Details

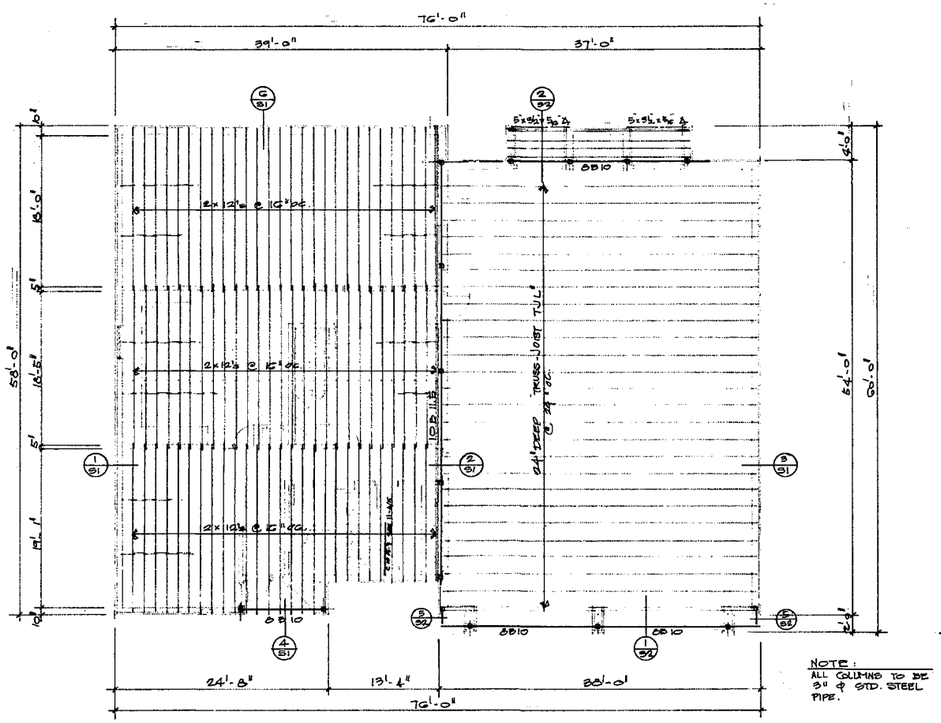

NOTE: ALL COLUMNS TO BE 3" ϕ STD. STEEL PIPE.

ROOF FRAMING PLAN 1/8" = 1'-0"

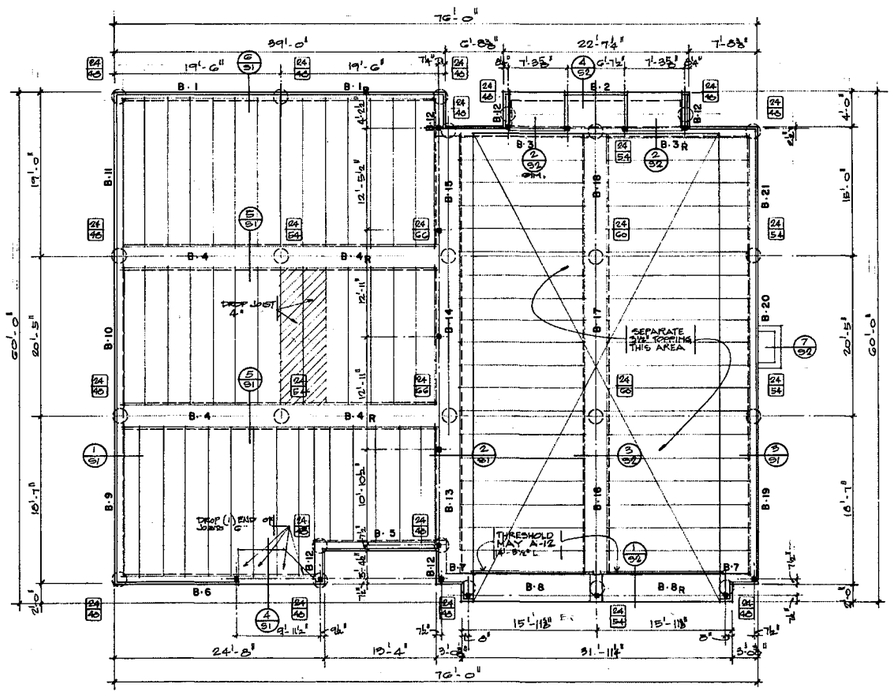

FOUNDATION PLAN 1/8" = 1'-0"

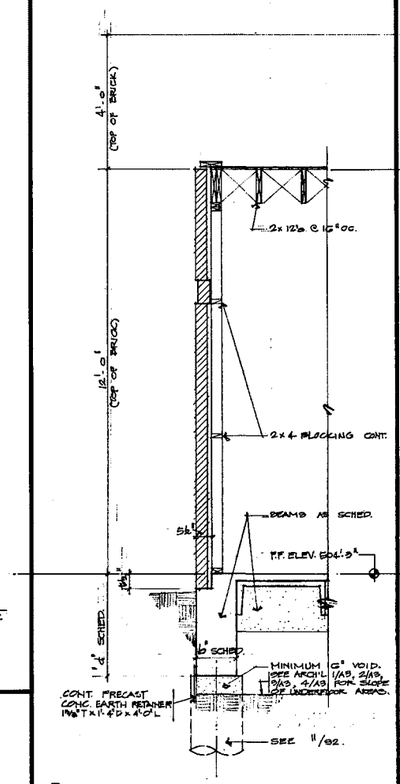

1 ½" = 1'-0"

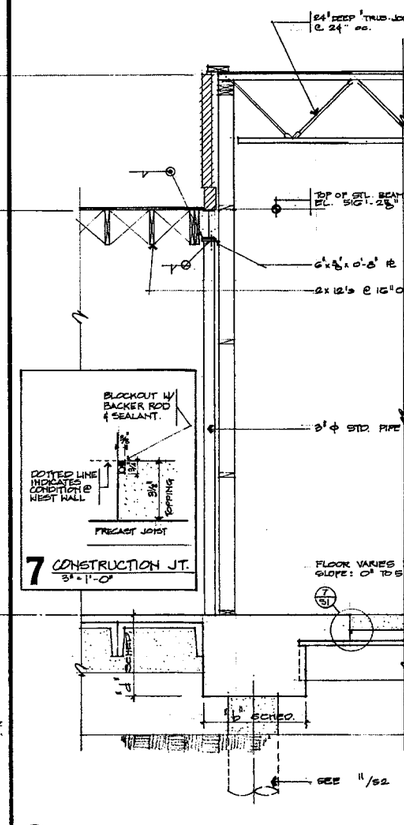

2 ½" = 1'-0"

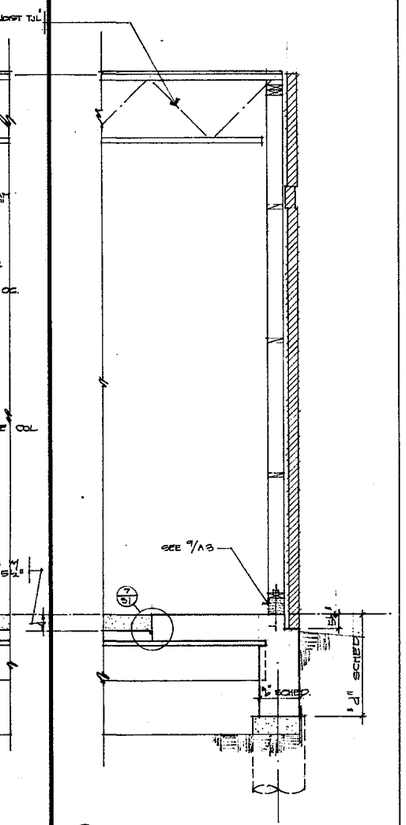

3 ½" = 1'-0"

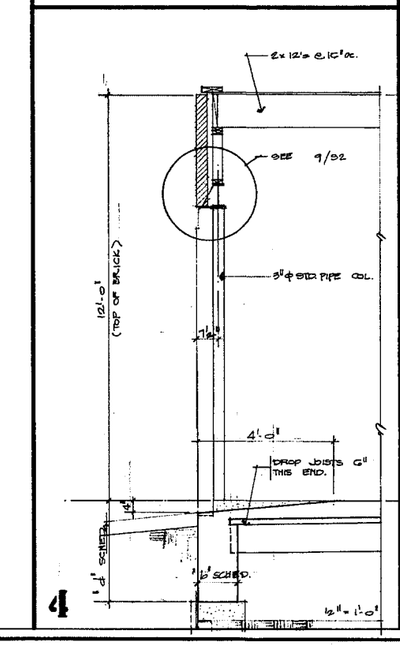

4 ½" = 1'-0"

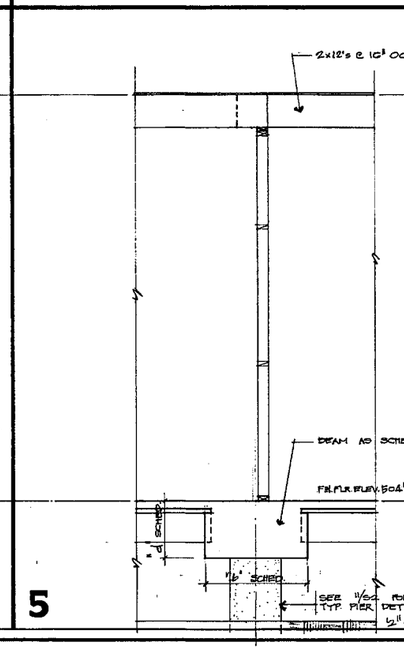

5 ½" = 1'-0"

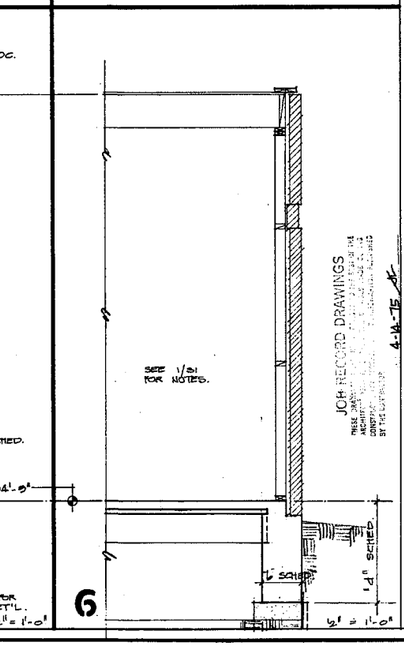

6 ½" = 1'-0"

R. J. JACK LACKEY
A R C H I T E C T
825 WEST 11th ST. 472-6663
AUSTIN TEXAS

A SOUTHEAST FIRE STATION
FOR THE CITY OF AUSTIN C.I.P. NO. 8305 0
5309 EAST RIVERSIDE DRIVE AUSTIN TEXAS

JOB NO: 1373
DATE: 3/1/74
DRAWN: JRE.
CHECKED: JRE.

SHEET NO
S1
OF 23 SHEETS

4-18-75

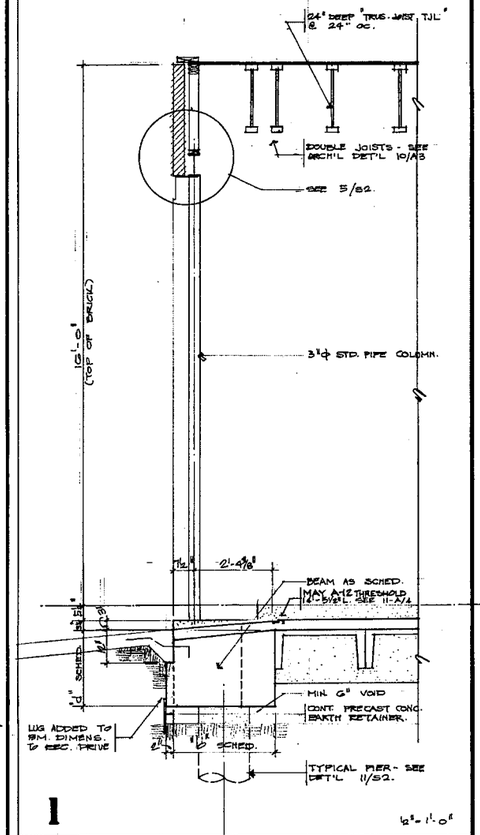

1 ½" = 1'-0"

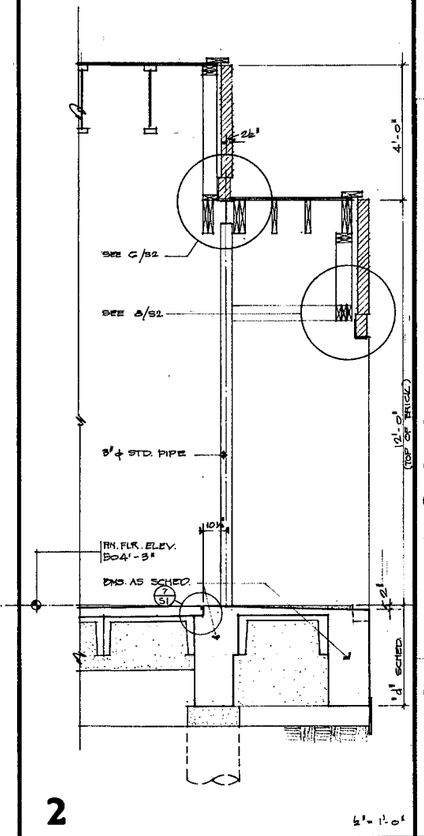

2 ½" = 1'-0"

STRUCTURAL NOTES

GENERAL

1. FOOTINGS SHALL BEAR IN TAN CLAY WITH A TOTAL BEARING PRESSURE OF 5000 P.S.F.
2. FOOTINGS SHALL BE ASSUMED TO BE 13'-0" BELOW EXISTING GRADE FOR ESTIMATING PURPOSES ONLY. ANY CHANGE IN FOOTING ELEVATION SHALL BE ADJUSTED ON A UNIT PRICE BASIS. SEE SPECIFICATIONS.
4. SEE ARCH'L DWGS. FOR EXACT LOCATION OF ALL SLAB DEPRESSIONS. SEE MECH'L DWG'S FOR LOCATION OF FLOOR DRAINS, PIPE SLEEVES, AND ALL OTHER OPENINGS THRU FLOOR SLABS AND ROOF DECKS.

CONCRETE

5. ALL CONCRETE SHALL HAVE A MIN. COMPRESSIVE STRENGTH OF 3000 P.S.I. AT 28 DAYS, BUT NOT LESS THAN 5 SACKS OF CEMENT SHALL BE USED PER CU. YD. OF CONCRETE REGARDLESS OF STRENGTHS OBTAINED, NOT OVER 7 GALLONS OF WATER PER SACK OF CEMENT, AND NOT OVER 5" SLUMP.
6. UNLESS OTHERWISE NOTED, ALL SLABS AND STAIRS ON FILL SHALL BE 5" THICK AND REINFORCED WITH #4 AT 14" O/C. E/W. SUPPORT REINF. 2" FROM TOP OF SLAB AND LAP 30 DIAMS AT SPLICES.
7. ALL REINF. CONCRETE SHALL CONFORM TO THE A.C.I. SPECIFICATIONS UNLESS NOTED OTHERWISE.
8. REINF. STEEL SHALL BE DETAILED AND FABRICATED IN ACCORDANCE WITH THE MANUAL OF STANDARD PRACTICE FOR DETAILING REINFORCED CONCRETE STRUCTURES.
9. STANDARD COVERAGE OF REINF. BARS UNLESS OTHERWISE NOTED SHALL BE:

WHERE DIRT FORMED	3"
SLABS AND JOISTS	3/4"
OTHERS	1-1/2"

10. BARS MARKED CONTINUOUS ("CONT.") AND ALL VERTICAL STEEL SHALL BE LAPPED 30 DIAMS. AT SPLICES. CONTINUOUS TOP BARS SPLICE AT CENTERLINE OF SPAN. CONTINUOUS BOTTOM BARS SPLICE OVER SUPPORTS.
11. AT CORNERS AND INTERSECTIONS OF ALL BEAMS EXTEND 4 CORNER BARS EQUAL TO THE SCHED. REINF. IN ADJACENT BEAM 2'-0" EACH WAY, 2 TOP AND 2 BOTTOM. MAKE ALL HORIZONTAL WALL STEEL CONT. AROUND CORNERS.
12. ALL REINFORCING STEEL SHALL MEET THE FOLLOWING A.S.T.M. SPECIFICATIONS: A-615 GRADE 40 AND A-305.
13. NO HORIZONTAL CONSTRUCTION JOINTS WILL BE PERMITTED IN SLABS, BEAMS OR GIRDERS. VERTICAL JOINTS SHALL BE LOCATED NEAR THE MIDDLE OF THE SPANS AND SHALL CONFORM TO THE A.C.I. CODE.
14. PROVIDE BAR SUPPORTS, SPACERS AND OTHER ACCESSORIES IN ACCORDANCE WITH THE A.C.I. DETAILING MANUAL.
15. MAINTAIN A MINIMUM OF ONE BAR DIAMETER (BUT IN NO CASE LESS THAN 1") BETWEEN ALL REINFORCING BARS.

STRUCTURAL STEEL, STEEL JOISTS, WELDING

16. ALL STRUCTURAL STEEL SHALL BE DETAILED, FABRICATED AND ERECTED IN ACCORDANCE WITH THE LATEST SPECIFICATION OF THE A.I.S.C. FOR STEEL BUILDINGS; WELDING SHALL BE IN ACCORDANCE WITH THE A.W.S. CODE.

ADDITIONAL NOTES

17. LIVE LOADS SHALL BE AS FOLLOWS:
    "APPARATUS RM. FLOOR" ..... 75 P.S.F. OVER FLOOR AREA PLUS A TRUCK AXLE LOAD OF 15,000#.
    "ROOF" ..... 20 P.S.F.
    "ALL OTHER FLR. AREAS" ..... 50 P.S.F.
18. FLOOR CONSTRUCTION SHALL BE AS FOLLOWS:
    "APPARATUS ROOM" ..... PRECAST CONC. JOISTS AS SHOWN SHALL BE SIMILAR TO "TEXCON - TYPE G" AND SHALL BE DESIGNED BY THE MFGR. FOR APPROVAL BY THE ENGINEER TO SUPPORT THE LIVE LOADS AND ALL DEAD LOADS. TOPPING OVER JOISTS SHALL BE MIN. 3½" THICK AND REINF. W/ 6x6 - 6/6 W.W.M. (POURED SEPERATELY)
    "ALL OTHER AREAS" ..... SAME AS APP. ROOM ABOVE EXCEPT "TEXCON - TYPE K", 2" TOPPING W/ 6x6 - 10/10 W.W.M.

B-1	14	3C	6/51	3	8	CONT.	FIRST	•		•	CONT. TOP BARS SPLICE 30 DIAM. WHEN REQ'D @ 6 & 7 OF SPAN. CONT. BOT. BARS SPLICE 30 DIAM. WHEN REQ'D OVER PIER.	#3	@10" oc.
B-1R													
B-2			4/52					•		•			
B-3													
B-3R			2/52					•		•			
B-4	3C	20	5/51	7				•		•			
B-4R				7									
B-5	14	3C	—	3				•		•			
				3									
B-6			4/51	3				•		•			
				4	9								
B-7			—	3	8			•		•			
				3	8								
B-8	38	26	1/52	7	6			•		•			
B-8R				7	6								
B-9	14	3C	1/51	3	8			•		•			
B-10								•		•			
B-11								•		•			
B-12			—					•		•			
B-13	3C	25/20	2/51	8				•		•			
B-14								•		•			
B-15								•		•			
B-16	48	23	3/52	10				•		•		2#3	
B-17								•		•		2#3	
B-18								•		•		2#3	
B-19	14	3C	3/51	4	9			•		•		#3	5@4-20.5; 15" oc.
B-20								•		•			
B-21								•		•			

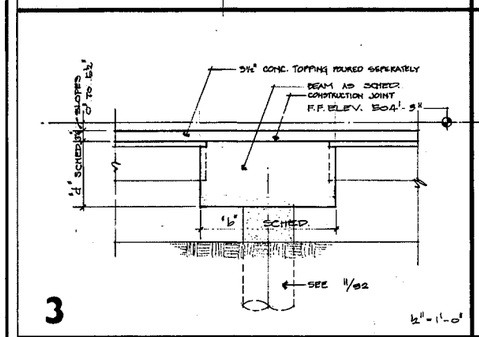

3 ½" = 1'-0"

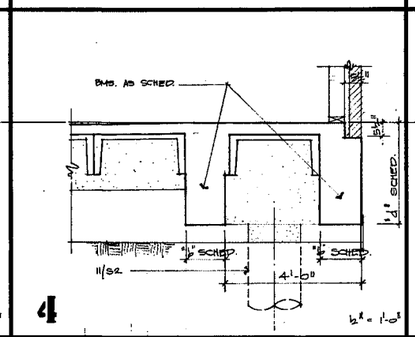

4 ½" = 1'-0"

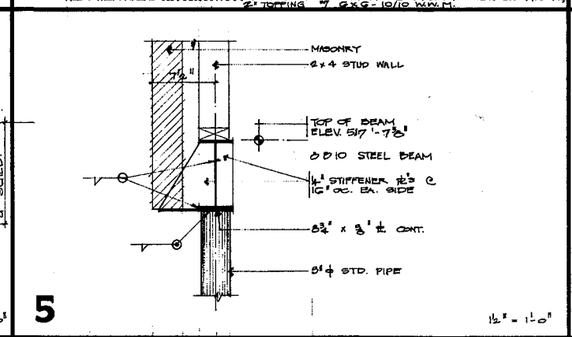

5 1½" = 1'-0"

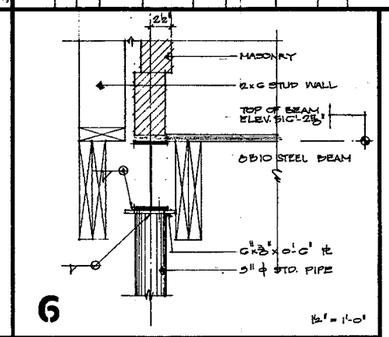

6 1½" = 1'-0"

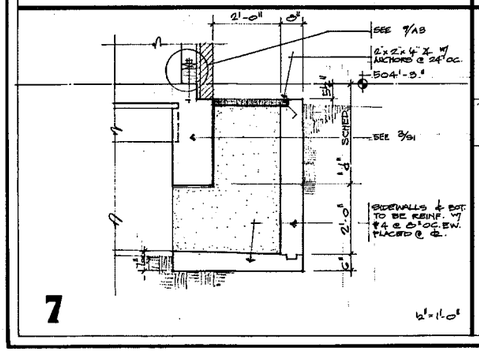

7 ½" = 1'-0"

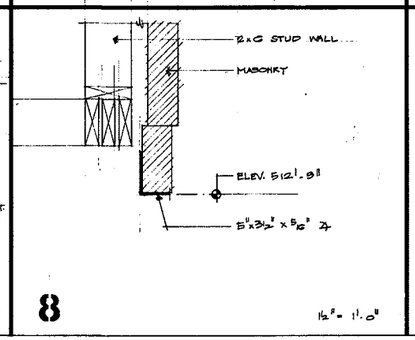

8 1½" = 1'-0"

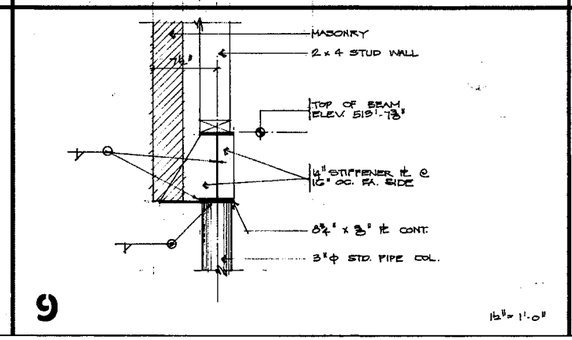

9 1½" = 1'-0"

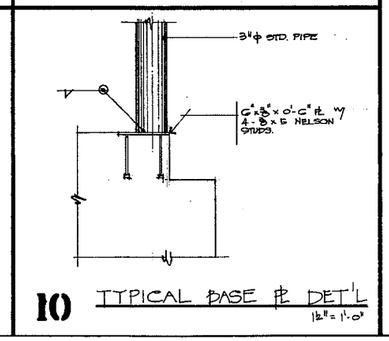

10 TYPICAL BASE PL DET'L 1½" = 1'-0"

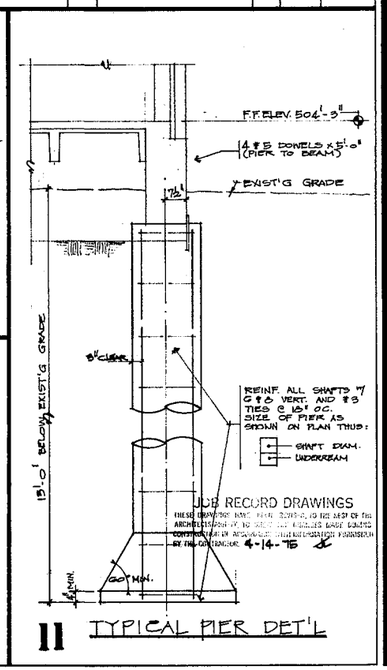

11 TYPICAL PIER DET'L

R. J. JACK LACKEY
A R C H I T E C T
3001 NORTH LAMAR SUITE 206
AUSTIN TEXAS

A SOUTHEAST FIRE STATION
FOR THE CITY OF AUSTIN C.I.P. NO. 8305 O
5309 EAST RIVERSIDE DRIVE
AUSTIN, TEXAS

JOB NO: 1373
DATE: 3/1/74
DRAWN: DRE.
CHECKED: DRE.

SHEET NO
S2
OF 2 S SHEETS

T837

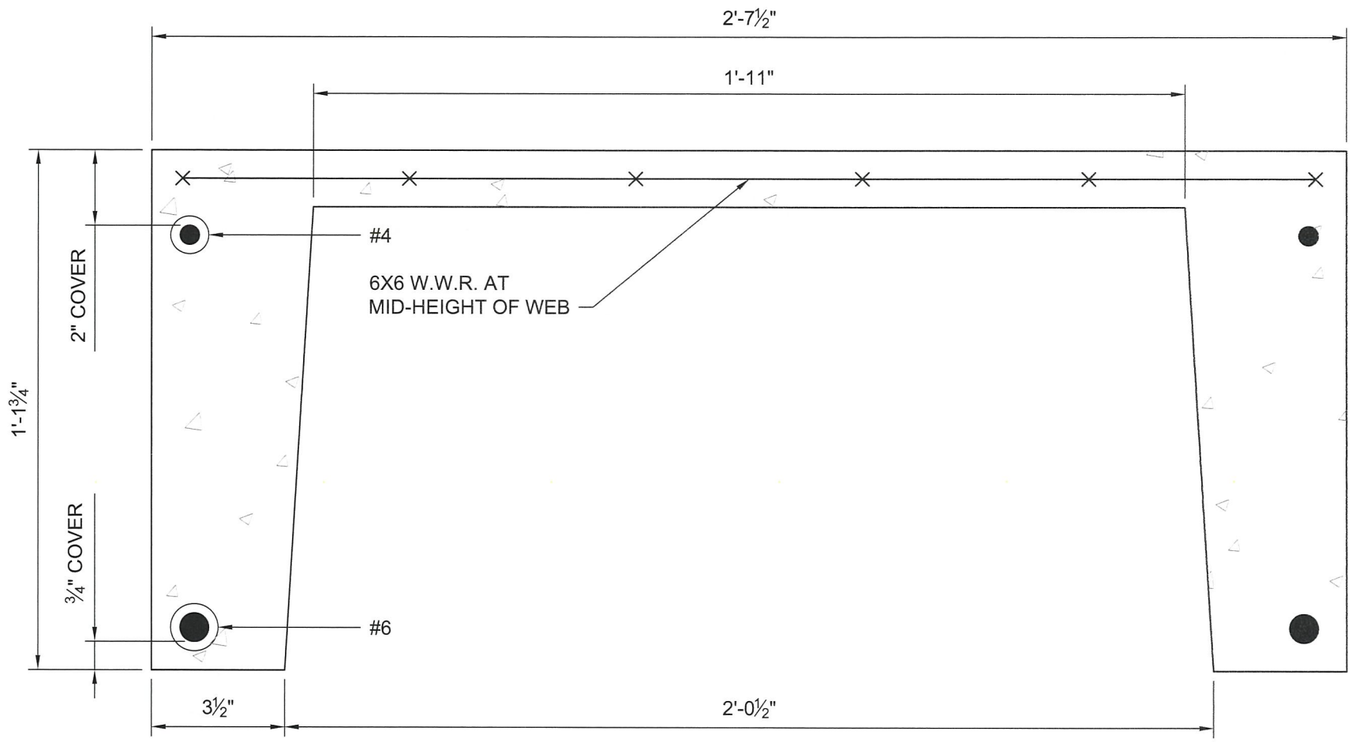

1 SECTION DETAIL OF PRECAST JOIST
3" = 1'-0"

CTLGROUP
CONSTRUCTION TECHNOLOGY LABORATORIES
ENGINEERS & CONSTRUCTION TECHNOLOGY CONSULTANTS

3737 Executive Center Dr., Suite 255
Austin, TX 78731-1633
Phone: 512-219-4057 Fax: 512-219-4077
www.CTLGroup.com

CTLGroup COA No.: F-3849

Austin Fire Department - Station #22

5309 E. Riverside Drive
Austin, TX 78741

Structural Floor System Capacity Assessment

ISSUE

No.	Description	Date

CTLGroup No.: **231701**
Drawn: **SEH**
Checked: **BLE**
Date: **12MAY17**
Scale: **AS SHOWN**

Title:
Section Detail of Precast Joist

Sheet No.:

1

Fire Station #22 - Crack and Core Locations

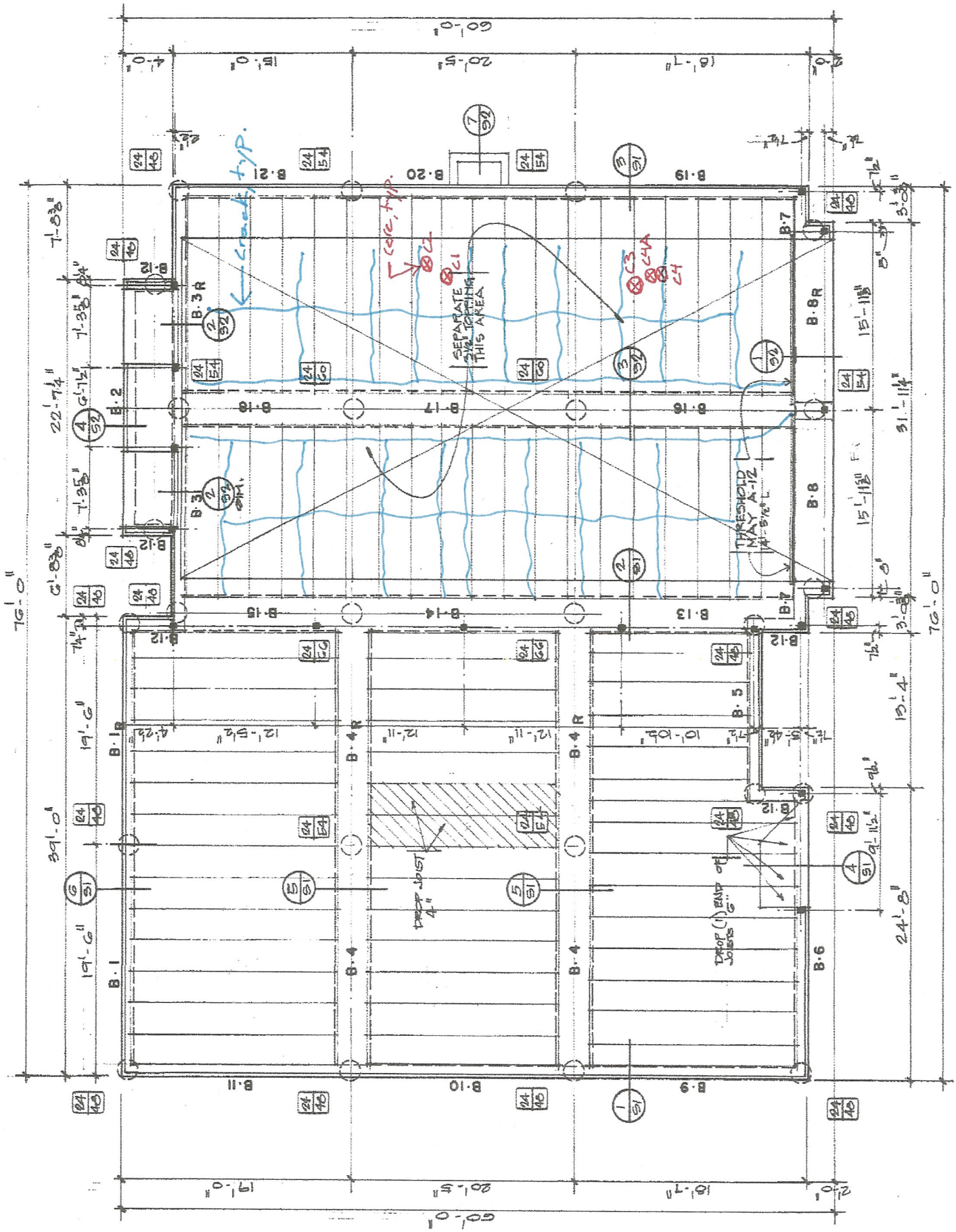

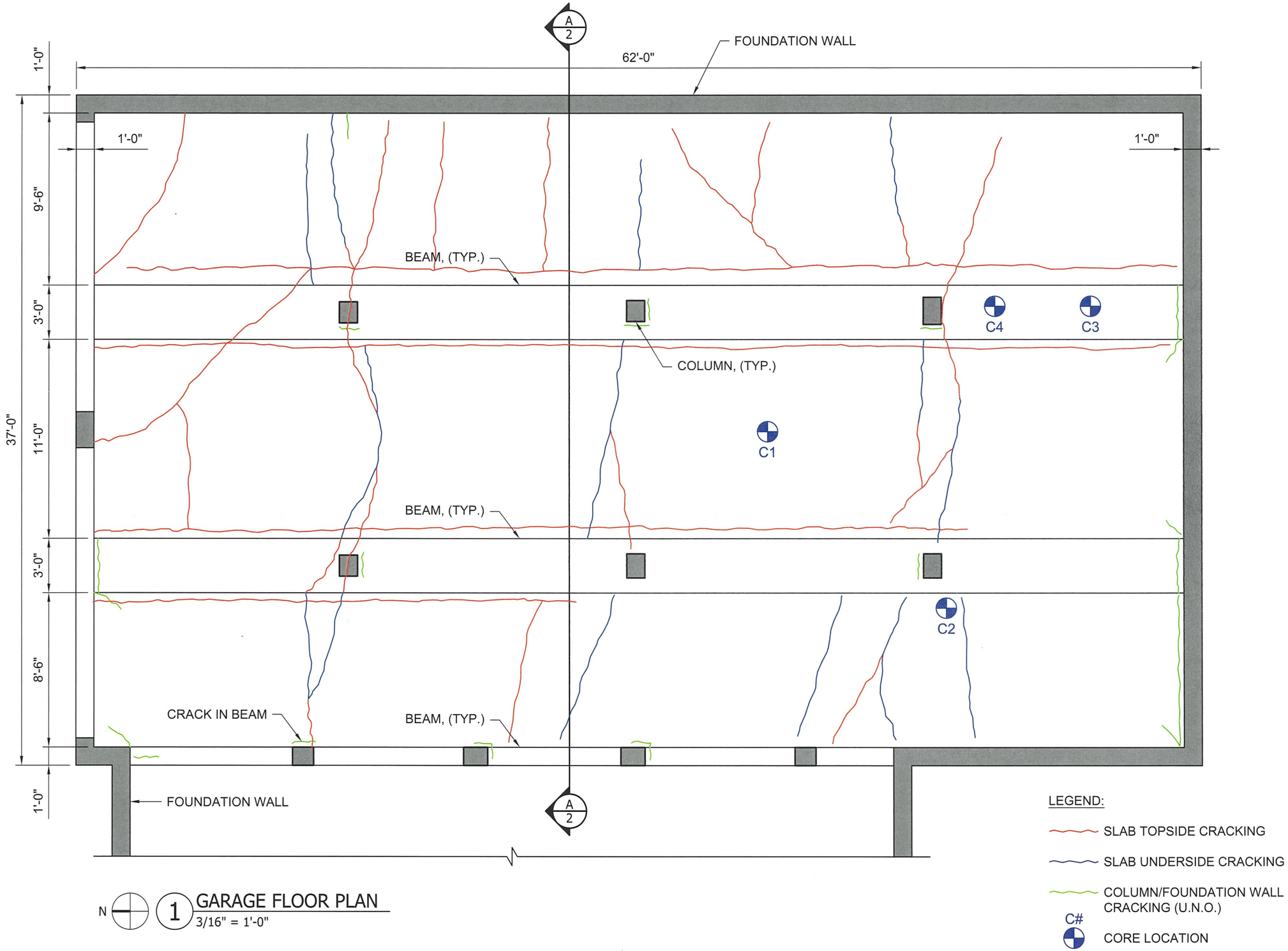

1 GARAGE FLOOR PLAN
3/16" = 1'-0"

CTLGROUP
CONSTRUCTION TECHNOLOGY LABORATORIES
ENGINEERS & CONSTRUCTION TECHNOLOGY CONSULTANTS

3737 Executive Center Dr., Suite 255
Austin, TX 78731-1633
Phone: 512-219-4057 Fax: 512-219-4077
www.CTLGroup.com

CTLGroup COA No.: F-3849

Austin Fire Department - Station #3

201 W. 30th Street
Austin, TX 78701

Structural Floor System Capacity Assessment

ISSUE

No.	Description	Date

CTLGroup No.: **231701**
Drawn: **SEH**
Checked: **BLE**
Date: **12MAY17**
Scale: **AS SHOWN**

Title:
Garage Floor Plan

Sheet No.:
1

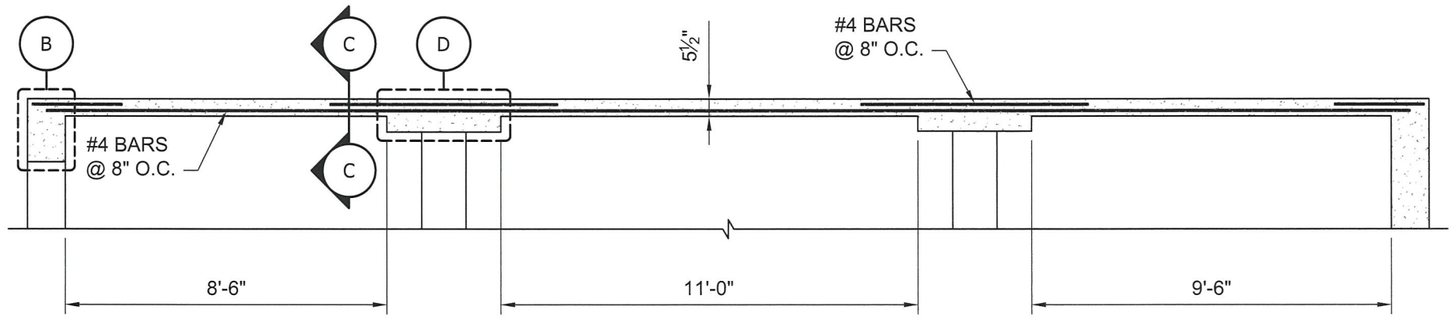

1 SECTION A-A
1/4" = 1'-0"

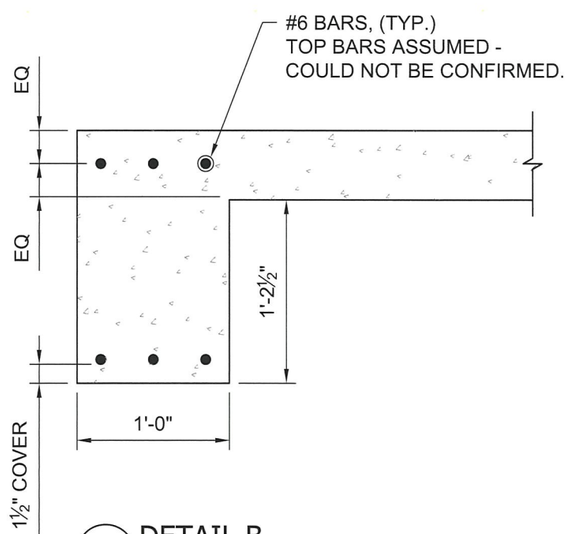

2 DETAIL B
1" = 1'-0"

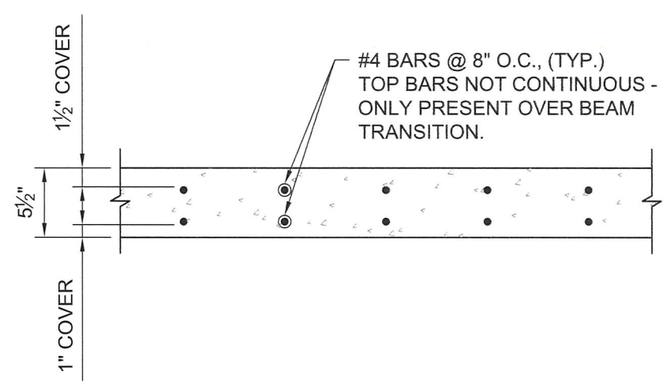

3 SECTION C-C
1" = 1'-0"

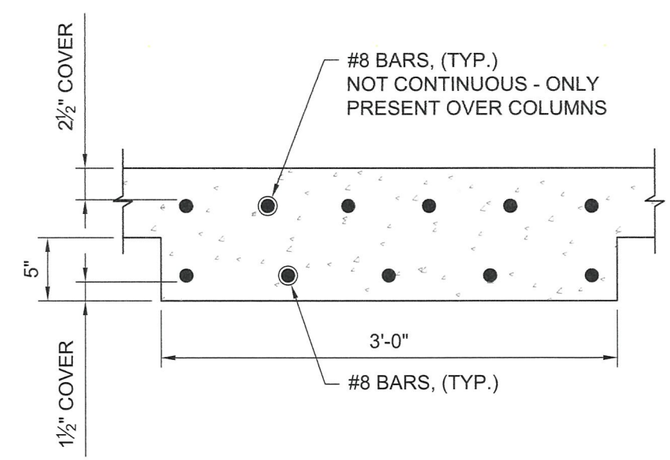

3 DETAIL D
1" = 1'-0"

CTLGROUP
CONSTRUCTION TECHNOLOGY LABORATORIES
ENGINEERS & CONSTRUCTION TECHNOLOGY CONSULTANTS
3737 Executive Center Dr., Suite 255
Austin, TX 78731-1633
Phone: 512-219-4057 Fax: 512-219-4077
www.CTLGroup.com

CTLGroup COA No.: F-3849

Austin Fire Department - Station #3

201 W. 30th Street
Austin, TX 78701

Structural Floor System Capacity Assessment

ISSUE

No.	Description	Date

CTLGroup No.: **231701**
Drawn: **SEH**
Checked: **BLE**
Date: **12MAY17**
Scale: **AS SHOWN**

Title:
Garage Floor Plan

Sheet No.:
2

Appendix B

CTLGroup Photographs

Figure B1 – General view at interior of Fire Station No. 22 garage

Figure B2 – General view of crawlspace beneath Fire Station No. 22 garage

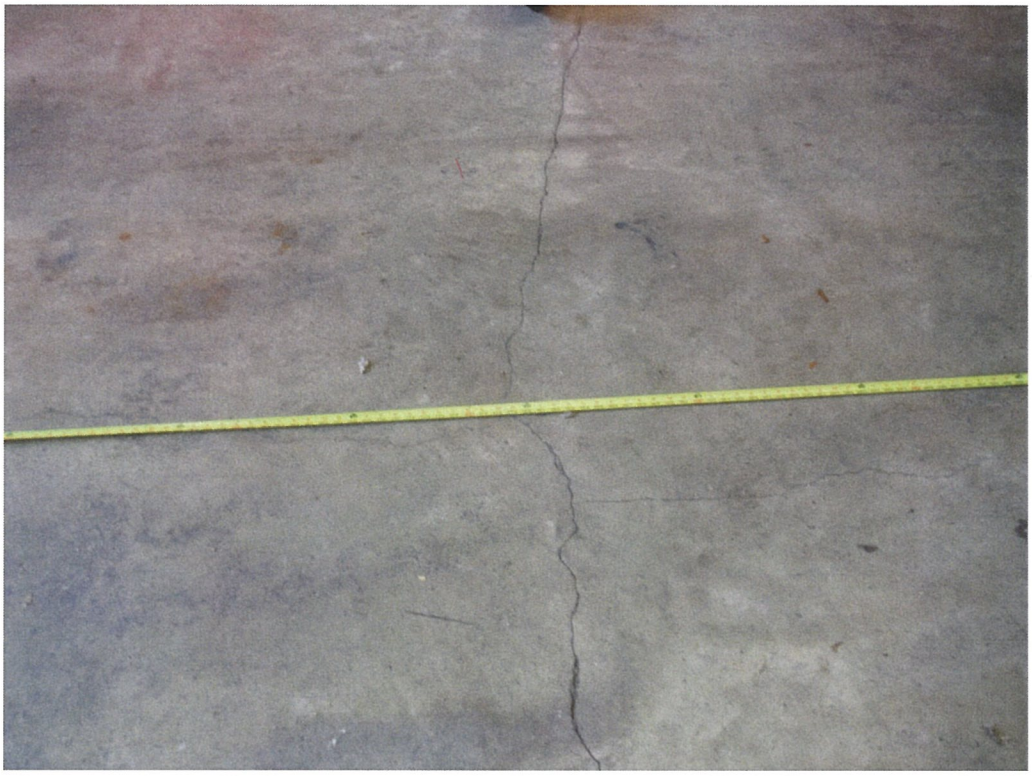

Figure B3 – Typical cracking in topping slab at Fire Station No. 22 garage

Figure B4 – Close-up of cracking in topping slab at Fire Station No. 22 garage

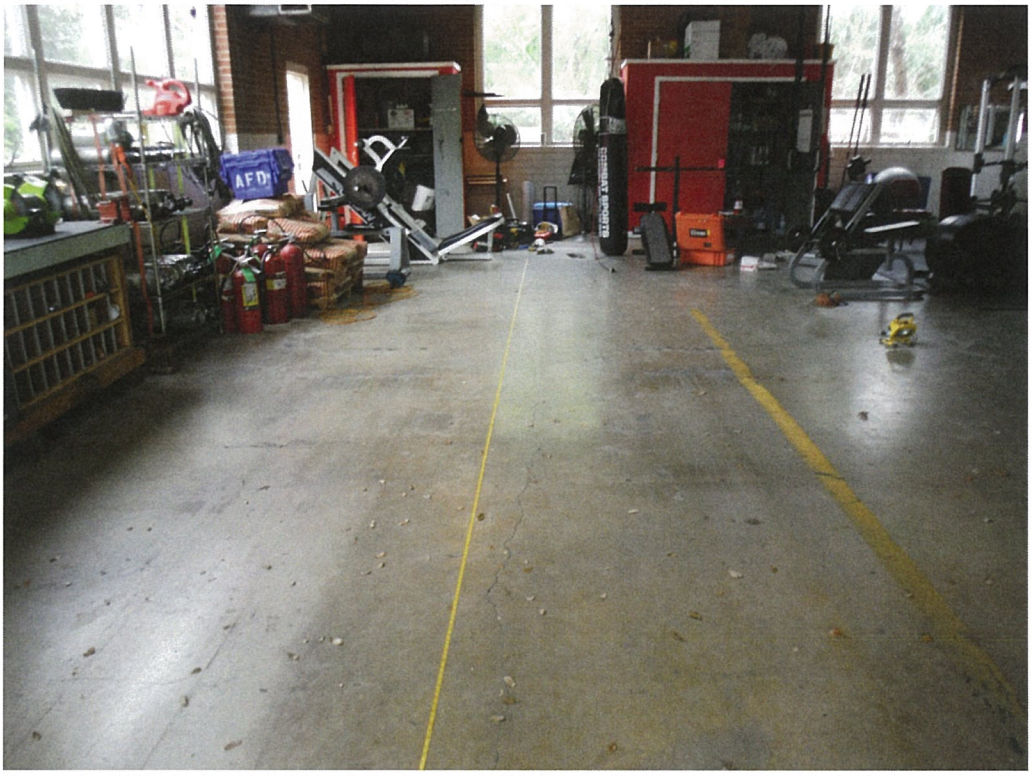

Figure B5 – General view at interior of Fire Station No. 3 garage

Figure B6 – General view of crawlspace beneath Fire Station No. 3 garage

Figure B7 – Typical cracking in top of slab at Fire Station No. 3 garage

Figure B8 – Typical cracking in underside of slab at Fire Station No. 3 garage

Figure B9 – Crack in west beam at north end of garage at Fire Station No. 3

Figure B10 – Typical horizontal crack in column at Fire Station No. 3

Figure B11 – Typical cracks in foundation wall at ends of middle beams at Fire Station No. 3

Figure B12 – Spalled concrete and corroded reinforcement at underside of slab at Fire Station No. 3

Appendix C

CTLGroup Compression Test Results

Client:	**City of Austin**	CTLGroup Project No.:	**231701**
Project Name:	**Austin Fire Department Stations 3 & 22 Structural Capacity Assessment**	CTLGroup Project Mgr.:	**Bradley East**
		Analyst:	**WD, CA**
Contact:	**Karim Helmi**	Approved by:	**Anthony Bentivegna**
Submitter:	**Bradley East**	Date Analyzed:	**March 10, 2017**
Date Received:	**March 3, 2017**	Date Reported:	**March 10, 2017**

ASTM C42 Standard Test Method for Obtaining and Testing Drilled Cores and Sawed Beams of Concrete
Section 7: Cores for Compressive Strength

Specimen Identification

CTLGroup Identification	4402601-01	4402602-01	4402604-01
Client Identification	No. 22-C1	No. 22-C2	No. 22-C4-Top
Date Core Obtained from the Field	2/23/17	2/23/17	2/23/17
Date end preparation was completed and core was placed in sealed bag	3/6/17	3/6/17	3/6/17
Date Core was Tested	3/10/17	3/10/17	3/10/17

Concrete Description

Nominal Maximum Aggregate Size, in.	1/2	1/2	1/2
Concrete Age at Test	~40 yr	~40 yr	~40 yr
Moisture Condition at Test	Per Standard	Per Standard	Per Standard
Length of Core, As Drilled, in.	5	6 1/4	5
Orientation of Core Axis in Structure	Vertical	Vertical	Vertical
Cylinder End Preparation	Capped	Capped	Capped

Concrete Dimensions

Diameter 1, in.	1.75	1.75	1.27
Diameter 2, in.	1.76	1.75	1.27
Average Diameter, in.	1.76	1.75	1.27
Cross-Sectional Area, in^2	2.43	2.41	1.27
Length Trimmed, in.	3.3	3.1	2.6
Length Capped, in.	3.5	3.3	2.8
Density, pcf	143	145	144

Compressive Strength and Fracture Pattern

Maximum Load, lb	10,695	15,412	5,928
Uncorrected compressive Strength, psi	4,400	6,400	4,670
Ratio of Capped Length to Diameter	1.99	1.86	2.17 (Note 1)
Corrected Compressive Strength, psi	4,400	6,400	4,670 (Note 1)
Fracture Pattern	Type 1	Type 1	Type 1

Schematic of Typical Fracture Patterns

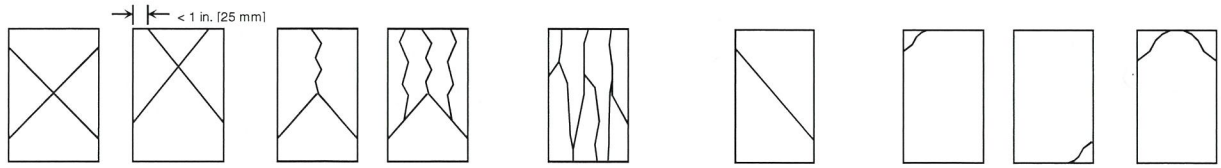

Type 1
Reasonable well-formed cones on both ends, less than 1 in. [25 mm] of cracking through caps

Type 2
Well-formed cone on one end, vertical cracks running through caps, no well-defined cone on other end

Type 3
Columnar vertical cracking through both ends, no well-formed cones

Type 4
Diagonal fracture with no cracking through ends; tap with hammer to distinguish from Type I

Type 5
Side fractures at top or bottom (occur commonly with unbonded caps)

Type 6
Similar to Type 5 but end of cylinder is pointed

Notes:
1. The ratio of capped length to diameter is larger than 2.1, the calculated compressive strength is reported for information only.
2. This report may not be reproduced except in its entirety.

Client:	**City of Austin**	CTLGroup Project No.:	**231701**
Project Name:	**Austin Fire Department Stations 3 & 22 Structural Capacity Assessment**	CTLGroup Project Mgr.:	**Bradley East**
		Analyst:	**WD, CA**
Contact:	**Karim Helmi**	Approved by:	**Anthony Bentivegna**
Submitter:	**Bradley East**	Date Analyzed:	**March 10, 2017**
Date Received:	**March 3, 2017**	Date Reported:	**March 10, 2017**

ASTM C42 Standard Test Method for Obtaining and Testing Drilled Cores and Sawed Beams of Concrete
Section 7: Cores for Compressive Strength

Specimen Identification

CTLGroup Identification	4402604-02	4402605-01	4402605-02
Client Identification	No. 22-C4-Bot	No. 22-C4A-Top	No. 22-C4A-Bot
Date Core Obtained from the Field	2/23/17	2/23/17	2/23/17
Date end preparation was completed and core was placed in sealed bag	3/6/17	3/6/17	3/6/17
Date Core was Tested	3/10/17	3/10/17	3/10/17

Concrete Description

Nominal Maximum Aggregate Size, in.	1/4	1/2	1/4
Concrete Age at Test	~40 yr	~40 yr	~40 yr
Moisture Condition at Test	Per Standard	Per Standard	Per Standard
Length of Core, As Drilled, in.	5	5	7
Orientation of Core Axis in Structure	Vertical	Vertical	Vertical
Cylinder End Preparation	Capped	Capped	Capped

Concrete Dimensions

Diameter 1, in.	1.27	1.27	1.28
Diameter 2, in.	1.27	1.28	1.27
Average Diameter, in.	1.27	1.28	1.28
Cross-Sectional Area, in^2	1.27	1.29	1.29
Length Trimmed, in.	1.4	2.5	1.4
Length Capped, in.	1.6	2.7	1.6
Density, pcf	117	150	112

Compressive Strength and Fracture Pattern

Maximum Load, lb	9,005	6,816	9,859
Uncorrected compressive Strength, psi	7,090	5,280	7,640
Ratio of Capped Length to Diameter	1.25	2.10	1.26
Corrected Compressive Strength, psi	6,590	5,280	7,110
Fracture Pattern	Type 1	Type 1	Type 1

Schematic of Typical Fracture Patterns

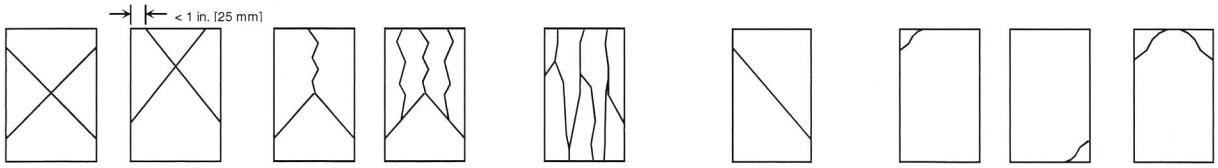

Type 1
Reasonable well-formed cones on both ends, less than 1 in. [25 mm] of cracking through caps

Type 2
Well-formed cone on one end, vertical cracks running through caps, no well-defined cone on other end

Type 3
Columnar vertical cracking through both ends, no well-formed cones

Type 4
Diagonal fracture with no cracking through ends; tap with hammer to distinguish from Type I

Type 5
Side fractures at top or bottom (occur commonly with unbonded caps)

Type 6
Similar to Type 5 but end of cylinder is pointed

Notes:
1. This report may not be reproduced except in its entirety.

Client:	**City of Austin**	CTLGroup Project No.:	**231701**
Project Name:	**Austin Fire Department Stations 3 & 22 Structural Capacity Assessment**	CTLGroup Project Mgr.:	**Bradley East**
		Analyst:	**WD, CA**
Contact:	**Karim Helmi**	Approved by:	**Anthony Bentivegna**
Submitter:	**Bradley East**	Date Analyzed:	**March 10, 2017**
Date Received:	**March 3, 2017**	Date Reported:	**March 10, 2017**

ASTM C42 Standard Test Method for Obtaining and Testing Drilled Cores and Sawed Beams of Concrete
Section 7: Cores for Compressive Strength

Specimen Identification

CTLGroup Identification	4402606-01	4402607-01	4402608-01
Client Identification	No. 22-C5	No. 22-C6	No. 22-C7
Date Core Obtained from the Field	2/23/17	2/23/17	2/23/17
Date end preparation was completed and core was placed in sealed bag	3/6/17	3/6/17	3/6/17
Date Core was Tested	3/10/17	3/10/17	3/10/17

Concrete Description

Nominal Maximum Aggregate Size, in.	3/4	3/4	3/4
Concrete Age at Test	~40 yr	~40 yr	~40 yr
Moisture Condition at Test	Per Standard	Per Standard	Per Standard
Length of Core, As Drilled, in.	9 1/4	10	9 1/2
Orientation of Core Axis in Structure	Horizontal	Horizontal	Horizontal
Cylinder End Preparation	Capped	Capped	Capped

Concrete Dimensions

Diameter 1, in.	3.73	3.73	3.73
Diameter 2, in.	3.73	3.73	3.73
Average Diameter, in.	3.73	3.73	3.73
Cross-Sectional Area, in^2	10.93	10.93	10.93
Length Trimmed, in.	7.5	7.6	7.6
Length Capped, in.	7.7	7.7	7.7
Density, pcf	146	145	145

Compressive Strength and Fracture Pattern

Maximum Load, lb	60,523	55,710	57,506
Uncorrected compressive Strength, psi	5,540	5,100	5,260
Ratio of Capped Length to Diameter	2.05	2.06	2.07
Corrected Compressive Strength, psi	5,540	5,100	5,260
Fracture Pattern	Type 1	Type 1	Type 1

Schematic of Typical Fracture Patterns

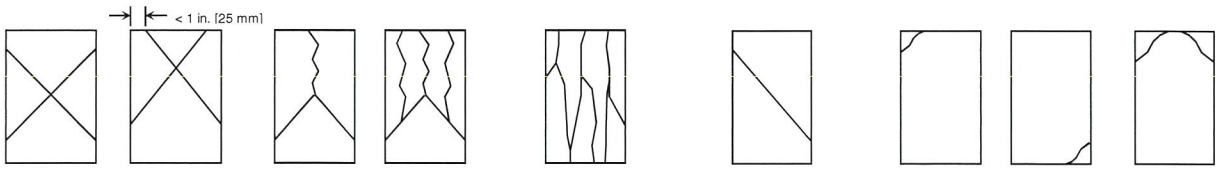

Type 1
Reasonable well-formed cones on both ends, less than 1 in. [25 mm] of cracking through caps

Type 2
Well-formed cone on one end, vertical cracks running through caps, no well-defined cone on other end

Type 3
Columnar vertical cracking through both ends, no well-formed cones

Type 4
Diagonal fracture with no cracking through ends; tap with hammer to distinguish from Type I

Type 5
Side fractures at top or bottom (occur commonly with unbonded caps)

Type 6
Similar to Type 5 but end of cylinder is pointed

Notes:
1. This report may not be reproduced except in its entirety.

Client:	**City of Austin**	CTLGroup Project No.:	**231701**
Project Name:	**Austin Fire Department Stations 3 & 22 Structural Capacity Assessment**	CTLGroup Project Mgr.:	**Bradley East**
		Analyst:	**WD, CA**
Contact:	**Karim Helmi**	Approved by:	**Anthony Bentivegna**
Submitter:	**Bradley East**	Date Analyzed:	**March 21, 2017**
Date Received:	**March 3, 2017**	Date Reported:	**March 28, 2017**

ASTM C42 Standard Test Method for Obtaining and Testing Drilled Cores and Sawed Beams of Concrete
Section 7: Cores for Compressive Strength

Specimen Identification

CTLGroup Identification	4402610-01	4402611-01	4402612-01
Client Identification	No. 3-C1	No. 3-C2	No. 3-C3
Date Core Obtained from the Field	2/23/17	2/23/17	2/23/17
Date end preparation was completed and core was placed in sealed bag	3/16/17	3/16/17	3/16/17
Date Core was Tested	3/21/17	3/21/17	3/21/17

Concrete Description

Nominal Maximum Aggregate Size, in.	3/4	3/4	3/4
Concrete Age at Test	~65 years	~65 years	~65 years
Moisture Condition at Test	Per Standard	Per Standard	Per Standard
Length of Core, As Drilled, in.	6	6 1/4	8 1/2
Orientation of Core Axis in Structure	Vertical	Vertical	Vertical
Cylinder End Preparation	Capped	Capped	Capped

Concrete Dimensions

Diameter 1, in.	2.74	2.74	2.75
Diameter 2, in.	2.74	2.75	2.74
Average Diameter, in.	2.74	2.75	2.75
Cross-Sectional Area, in^2	5.90	5.94	5.94
Length Trimmed, in.	3.4	5.4	5.6
Length Capped, in.	3.5	5.5	5.7
Density, pcf	139	138	140

Compressive Strength and Fracture Pattern

Maximum Load, lb	22,748	29,779	16,066
Uncorrected compressive Strength, psi	3,860	5,010	2,700
Ratio of Capped Length to Diameter	1.29	1.99	2.08
Corrected Compressive Strength, psi	3,590	5,010	2,700
Fracture Pattern	Type 1	Type 1	Type 1

Schematic of Typical Fracture Patterns

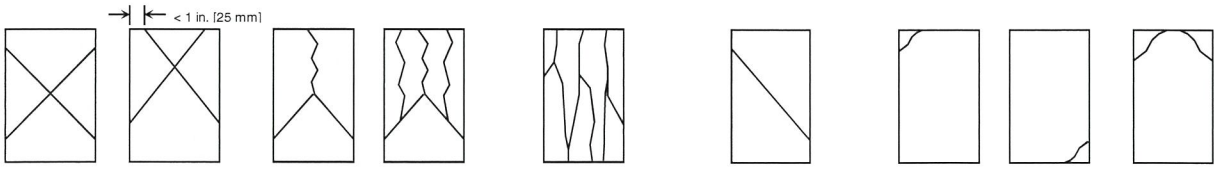

Type 1
Reasonable well-formed cones on both ends, less than 1 in. [25 mm] of cracking through caps

Type 2
Well-formed cone on one end, vertical cracks running through caps, no well-defined cone on other end

Type 3
Columnar vertical cracking through both ends, no well-formed cones

Type 4
Diagonal fracture with no cracking through ends; tap with hammer to distinguish from Type I

Type 5
Side fractures at top or bottom (occur commonly with unbonded caps)

Type 6
Similar to Type 5 but end of cylinder is pointed

Notes:
1. This report may not be reproduced except in its entirety.

Appendix D

Fire Station Vehicle Drawings and Specifications

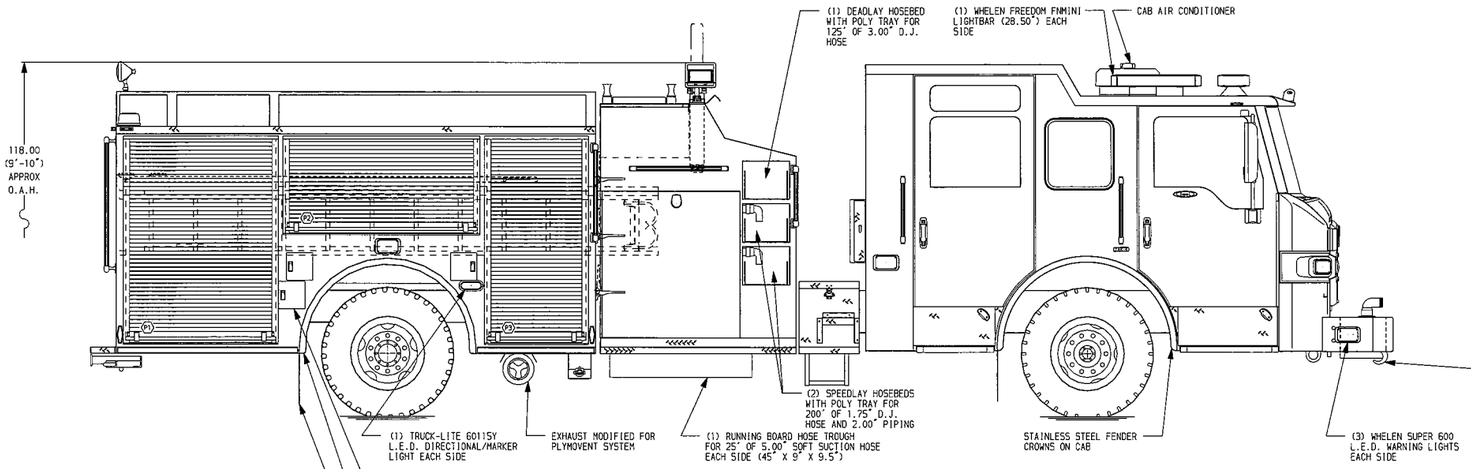

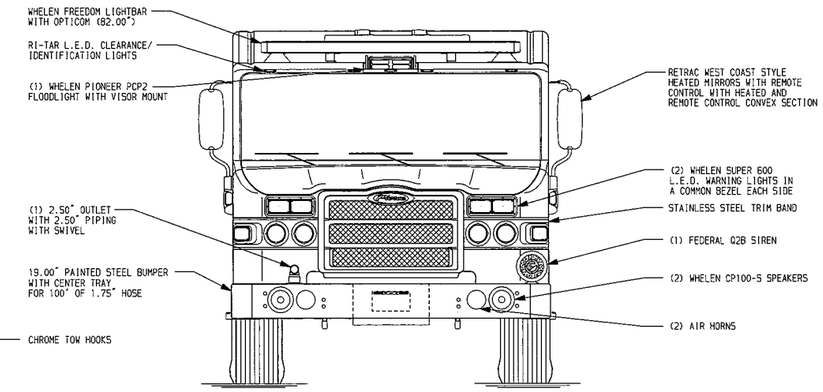

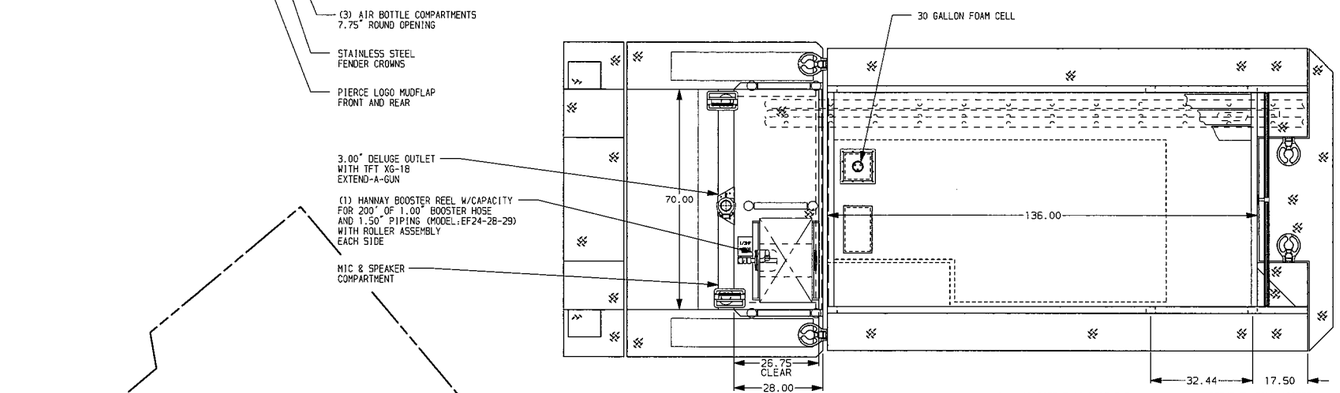

HOSEBED CAPACITIES
1. 400' OF 3.00" D.J. HOSE
2. 400' OF 3.00" D.J. HOSE
3. 1000' OF 5.00" D.J. HOSE
4. OPEN BAY

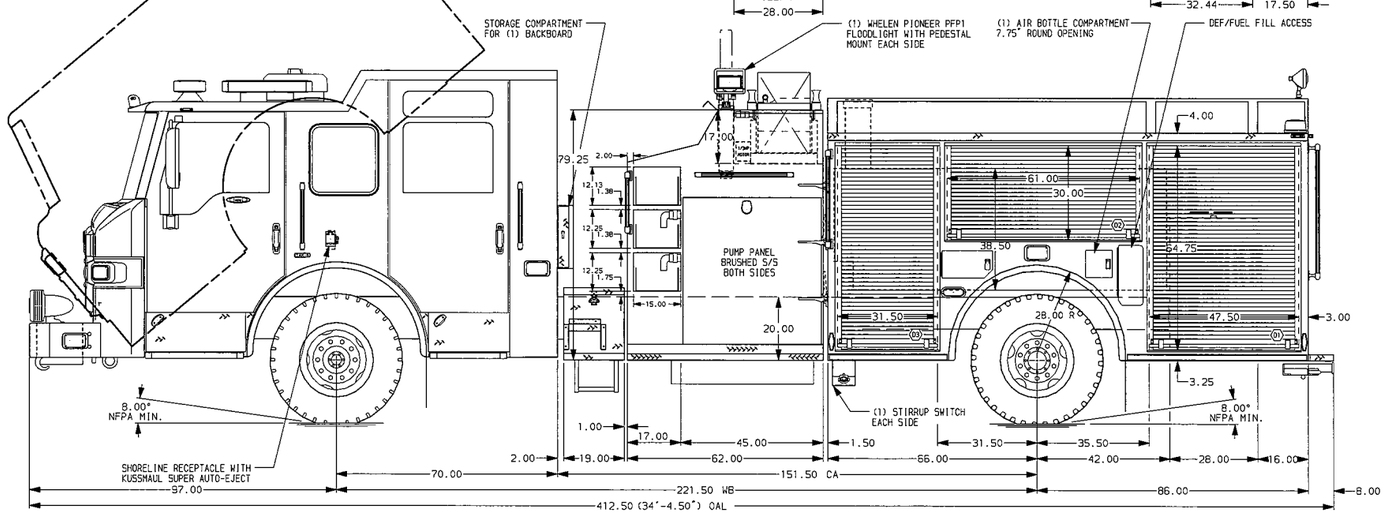

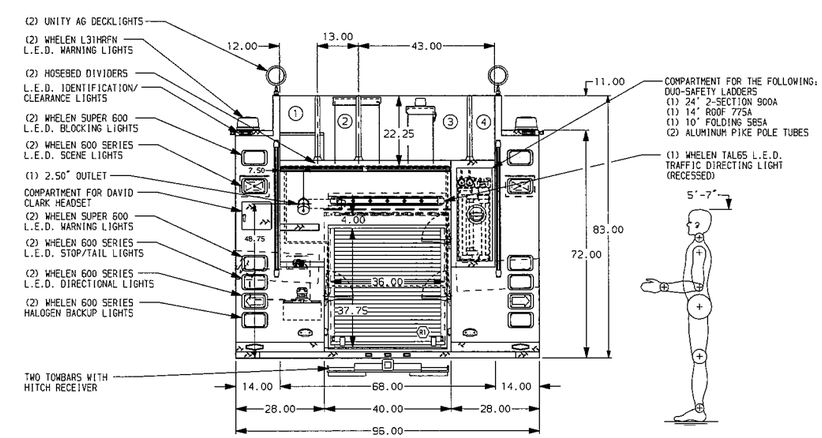

STAINLESS STEEL BODY

SIDE ROLL & FRONTAL IMPACT PROTECTION

NOTE

DIMENSIONS SHOWN ARE APPROXIMATE AND ARE SUBJECT TO MINOR DEVIATIONS AS MAY OCCUR OR BE NECESSARY IN CONSTRUCTION.
MINOR DETAILS NOT SHOWN.

1. AIR INLET/OUTLET WITH DISCONNECT FITTING LOCATED ON DRIVER SIDE PUMP PANEL
2. AIR COMPRESSOR LOCATED UNDER CREW AREA SEAT
3. TWO ZIAMATIC AC-44 WHEEL CHOCKS SHIPPED LOOSE
4. MOUNTING BASES FOR ANTENNAS LOCATED PER SHOP ORDER
5. KUSSMAUL BATTERY CHARGER LOCATED IN CREW CAB SEAT RISER
6. BATTERY CHARGE INDICATOR LOCATED ON DRIVER SEAT WITH BRACKET
7. ONE FLOOR MOUNTED SLIDE-OUT TRAY IN COMPARTMENTS D1 AND R1
8. ONE ADJUSTABLE SLIDE-OUT TRAY IN COMPARTMENT D3
9. 4-WAY ALUMINUM ON THE FLOOR OF COMPARTMENT D3
10. ALUMINUM PEGBOARD WITH TRACKS IN COMPARTMENT D1
11. ONE ADJUSTABLE FULL WIDTH/DEPTH SHELF IN COMPARTMENTS P2 AND R1; TWO IN D1, D2, D3 AND P1; THREE IN P3
12. PERIMETER SCENE LIGHTS LOCATED PER SHOP ORDER
13. HUSKY FOAM SYSTEM RESERVOIR MOUNTED IN DRIVER SIDE OF PUMP HOUSE

REV	DATE	BY	CH
V	12JAN12	SHA	-

CHASSIS DATA: MAKE PIERCE; MODEL IMP7010

Pierce MANUFACTURING INC.

TITLE: 1500-D-600P W/30 GAL. FOAM CELL, 152" BODY, DS FR FD (2)SPEEDLAYS, (1)DEADLAY, LADDERS BTWN TANK & S.SHT

FOR: AUSTIN FIRE DEPARTMENT, AUSTIN, TEXAS

DWG NO. 25403AD

JOB NO.	SCALE	DRAWN BY	DATE	CHECKED BY	DATE	SHEET SIZE	SHEET NO.
25403 01-02	1:24	SHI	03JAN12	GRM	06JAN12	D	1 OF 1

Austin Fire Department
Pierce Impel Pumper

PERFORMANCE BOND, NOT REQUESTED

A performance bond will not be included. If requested at a later date, one will be provided to you for an additional cost and the following will apply:

The successful bidder will furnish a Performance and Payment bond (Bond) equal to 100 percent of the total contract amount within 30 days of the notice of award. Such Bond will be in a form acceptable to the Owner and issued by a surety company included within the Department of Treasury's Listing of Approved Sureties (Department Circular 570) with a minimum A.M. Best Financial Strength Rating of A and Size Category of XV. In the event of a bond issued by a surety of a lesser Size Category, a minimum Financial Strength rating of A+ is required.

Bidder and Bidder's surety agree that the Bond issued hereunder, whether expressly stated or not, also includes the surety's guarantee of the vehicle manufacturer's Bumper to Bumper warranty period included within this proposal. Owner agrees that the penal amount of this bond will be simultaneously amended to 25 percent of the total contract amount upon satisfactory acceptance and delivery of the vehicle(s) included herein. Notwithstanding anything contained within this contract to the contrary, the surety's liability for any warranties of any type will not exceed three (3) years from the date of such satisfactory acceptance and delivery, or the actual Bumper to Bumper warranty period, whichever is shorter.

APPROVAL DRAWING

A drawing of the proposed apparatus will be prepared and provided to the purchaser for approval before construction begins. The Pierce sales representative will also be provided with a copy of the same drawing. The finalized and approved drawing will become part of the contract documents. This drawing will indicate the chassis make and model, location of the lights, siren, horns, compartments, major components, etc.

A "revised" approval drawing of the apparatus will be prepared and submitted by Pierce to the purchaser showing any changes made to the approval drawing.

ELECTRICAL WIRING DIAGRAMS

Two (2) electrical wiring diagrams, prepared for the model of chassis and body, will be provided.

IMPEL™ CHASSIS

The Pierce Impel is the custom chassis developed exclusively for the fire service. Chassis provided will be a new, tilt type custom fire apparatus. The chassis will be manufactured in the apparatus body builder's facility eliminating any split responsibility. The chassis will be designed and manufactured for heavy duty service, with adequate strength, capacity for the intended load to be sustained, and the type of service required. The chassis will be the manufacturer's first line tilt cab.

WHEELBASE

The wheelbase of the vehicle will be 221.5.

GVW RATING

The gross vehicle weight rating will be 46,500.

Austin Fire Department
Pierce Impel Pumper

FRAME

The chassis frame will be built with two (2) steel channels bolted to five (5) cross members or more, depending on other options of the apparatus. The side rails will have a 13.38" tall web over the front and mid sections of the chassis, with a continuous smooth taper to 10.75" over the rear axle. Each rail will have a section modulus of 25.992 cubic inches and a resisting bending moment (rbm) of 3,119,040 in-lb over the critical regions of the frame assembly, with a section modulus of 18.96 cubic inches with an rbm of 2,275,200 in-lb over the rear axle. The frame rails will be constructed of 120,000 psi yield strength heat-treated .38" thick steel, with 3.50" wide flanges.

FRAME REINFORCEMENT

In addition, a mainframe inverted "L" liner will be provided. It will be heat-treated steel measuring 12.00" x 3.00" x .25". Each liner will have a section modulus of 7.795 cubic inches, yield strength of 110,000 psi, and rbm of 857,462 in-lb. Total rbm at wheelbase center will be 3,976,502 pounds per rail.

The frame liner will be mounted inside of the chassis frame rail and extend the full length of the frame.

FRONT NON DRIVE AXLE

The Oshkosh TAK-4® front axle will be of the independent suspension design with a ground rating of 19,500 lb.

Upper and lower control arms will be used on each side of the axle. Upper control arm castings will be made of 100,000-psi yield strength 8630 steel and the lower control arm casting will be made of 55,000-psi yield ductile iron.

The center cross members and side plates will be constructed out of 80,000-psi yield strength steel.

Each control arm will be mounted to the center section using elastomer bushings. These rubber bushings will rotate on low friction plain bearings and be lubricated for life. Each bushing will also have a flange end to absorb longitudinal impact loads, reducing noise and vibrations.

There will be nine (9) grease fittings supplied, one (1) on each control arm pivot and one (1) on the steering gear extension.

The upper control arm will be shorter than the lower arm so that wheel end geometry provides positive camber when deflected below rated load and negative camber above rated load.

Camber at load will be zero degrees for optimum tire life.

The ball joint bearing will be of low friction design and be maintenance free.

Toe links that are adjustable for alignment of the wheel to the center of the chassis will be provided.

The wheel ends must have little to no bump steer when the chassis encounters a hole or obstacle.

The steering linkage will provide proper steering angles for the inside and outside wheel, based on the vehicle wheelbase.

The axle will have a third party certified turning angle of 45 degrees. Front discharge, front suction, or aluminum wheels will not infringe on this cramp angle.

FRONT SUSPENSION
Front Oshkosh TAK-4™ independent suspension will be provided with a minimum ground rating of 19,500 lb.

The independent suspension system will be designed to provide maximum ride comfort. The design will allow the vehicle to travel at highway speeds over improved road surfaces and at moderate speeds over rough terrain with minimal transfer of road shock and vibration to the vehicle's crew compartment.

Each wheel will have torsion bar type spring. In addition, each front wheel end will also have energy absorbing jounce bumpers to prevent bottoming of the suspension.

The suspension design will be such that there is at least 10.00" of total wheel travel and a minimum of 3.75" before suspension bottoms.

The torsion bar anchor lock system allows for simple lean adjustments, without the use of shims. One can adjust for a lean within fifteen minutes per side. Anchor adjustment design is such that it allows for ride height adjustment on each side.

The independent suspension was put through a durability test that simulated 140,000 miles of inner city driving.

SHOCK ABSORBERS
Heavy-duty telescoping shock absorbers (KONI) will be provided on the front suspension.

OIL SEALS
Oil seals with viewing window will be provided on the front axle.

FRONT TIRES
The front tires will be Michelin 385/65R22.50 radials, 18 ply XFE wide base tread, rated for 19,840 lb maximum axle load and 75 mph maximum speed.

The tires will be mounted on 22.50" x 12.25" steel disc-type wheels with a ten (10)-stud, 11.25" bolt circle.

REAR AXLE
The rear axle will be a Meritor™, Model RS-26-185, with a capacity of 27,000 lb.

TOP SPEED OF VEHICLE
A rear axle ratio will be furnished to allow the vehicle to reach a top speed of 68 MPH.

REAR SUSPENSION
The rear suspension will be Standens, semi-elliptical, 3.00" wide x 53.00" long, 12-leaf pack with a ground rating of 27,000 lbs. The spring hangers will be castings.

The two (2) top leaves will wrap the forward spring hanger pin, and the rear of the spring will be a slipper style end that will ride in a rear slipper hanger. To reduce bending stress due to acceleration and braking, the front eye will be a berlin eye that will place the front spring pin in the horizontal plane within the main leaf.

A steel encased rubber bushing will be used in the spring eye. The steel encased rubber bushing will be maintenance free and require no lubrication.

OIL SEALS
Oil seals will be provided on the rear axle.

REAR TIRES
Rear tires will be four (4) Michelin 12R22.50 radials, 16 ply "all position" XZY 3 tread, rated for 27,120 lb maximum axle load and 75 mph maximum speed.

The tires will be mounted on 22.50" x 8.25" steel disc-type wheels with a ten (10)-stud 11.25" bolt circle.

TIRE BALANCE
All tires will be balanced with Counteract balancing beads. The beads will be inserted into the tire and eliminate the need for wheel weights.

TIRE PRESSURE MANAGEMENT
There will be a VECSAFE LED tire alert pressure management system provided that will monitor each tire's pressure. A chrome plated brass sensor will be provided on the valve stem of each tire for a total of six (6) tires.

The sensor will calibrate to the tire pressure when installed on the valve stem for pressures between 20 and 120 psi. The sensor will activate an integral battery operated LED when the pressure of that tire drops eight (8) psi.

Removing the cap from the sensor will indicate the functionality of the sensor and battery. If the sensor and battery are in working condition, the LED will immediately start blinking.

HUB COVERS (front)
Stainless steel hub covers will be provided on the front axle. An oil level viewing window will be provided.

HUB COVERS (rear)
A pair of stainless steel high hat hub covers will be provided on rear axle hubs.

COVERS, LUG NUT, CHROME
Chrome lug nut covers will be supplied on front and rear wheels.

MUD FLAPS
Mud flaps with a Pierce logo will be installed behind the front and rear wheels.

WHEEL CHOCKS
There will be one (1) pair of Ziamatic AC-44, aluminum alloy wheel blocks provided.

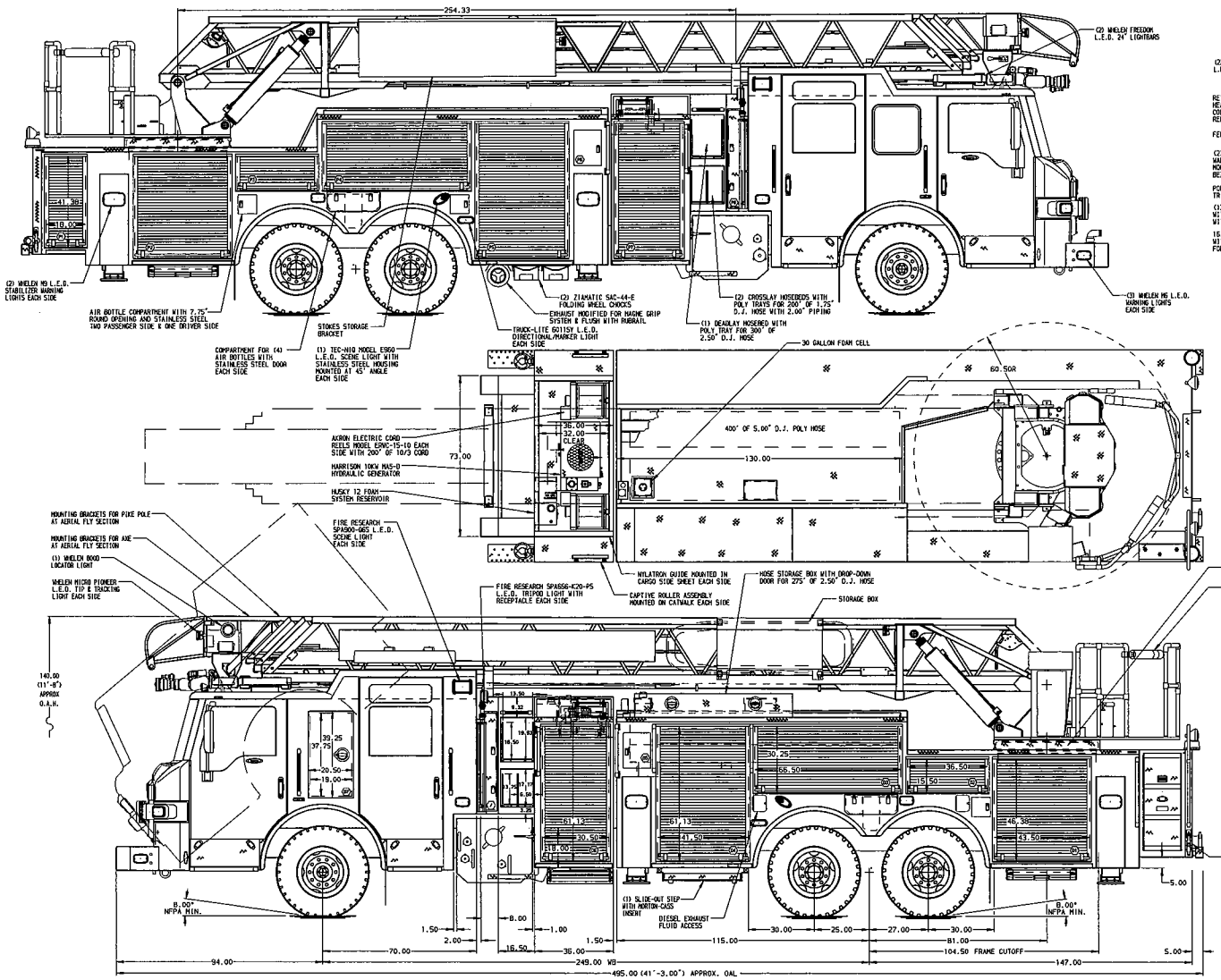

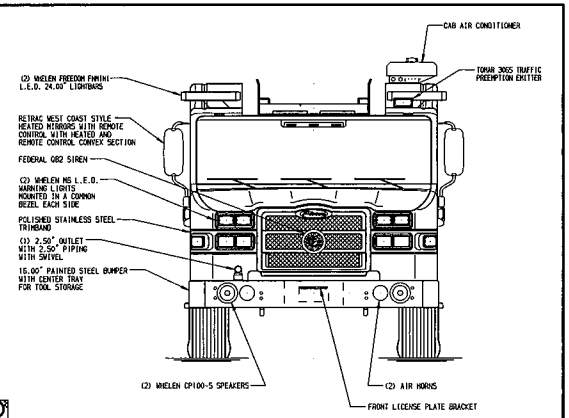

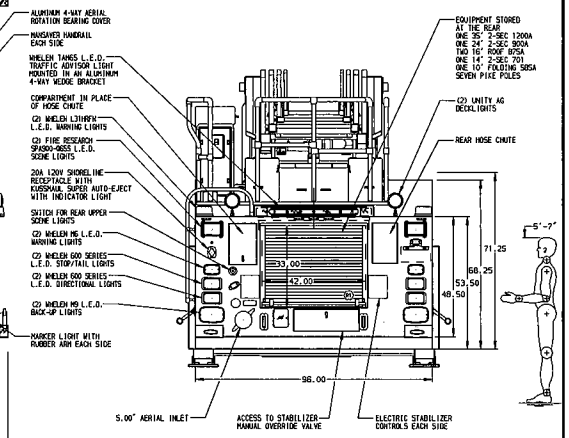

ALUMINUM BODY

SIDE ROLL AND FRONTAL IMPACT PROTECTION

NOTE

DIMENSIONS SHOWN ARE APPROXIMATE AND ARE SUBJECT TO MINOR DEVIATIONS AS MAY OCCUR OR BE NECESSARY IN CONSTRUCTION.
MINOR DETAILS NOT SHOWN.

1. PERIMETER SCENE LIGHTS LOCATED PER SHOP ORDER
2. ANTENNA MOUNTS LOCATED PER SHOP ORDER
3. ANSOR AYSCO DUAL LIGHT STRIPS IN COMPARTMENT D1,D2,D3,D4,D5,D6,P1,P2,P3,P4,P5,P6,P7
4. SHELF TRACKS LOCATED IN COMPARTMENT D1,D2,D3,D4,P1,P2,P3,P4,P5
5. ONE FULL WIDTH/DEPTH BRUSHED ALUMINUM ADJUSTABLE SHELF IN COMPARTMENT D3,P1,TWO IN D1,P2,P4,P5 & THREE IN P7
6. ONE FLOOR MOUNTED BRUSHED ALUMINUM SLIDE-OUT TRAY IN COMPARTMENT D1,D4,P2,P5
7. ALUMINAM PEGBOARD WITH HOOKS ON THE SIDE WALLS AND REAR WALL OF COMPARTMENT D4
8. CIRCUIT BREAKER PANEL IN COMPARTMENT D5
9. EAST AIR COMPRESSOR IN COMPARTMENT D5
10. KUSSMAUL 1200 BATTERY CHARGER IN COMPARTMENT D5
11. BATTERY CHARGE INDICATOR MOUNTED ON DRIVER SIDE CREW CAB SEAT RISER
12. HUSKY 12 SINGLE AGENT FOAM SYSTEM
13. AIR INLET/OUTLET WITH DISCONNECT FITTING LOCATED ON THE DRIVER SIDE PUMP PANEL
14. PERIMETER SCENE LIGHTS LOCATED PER SHOP ORDER
15. TRIDENT FOLDING STEPS MOUNTED ON AERIAL DEVICE PER SHOP ORDER
16. 12KW POWER TO AERIAL TIP
17. REMOTE LADDER CONTROLS AT AERIAL TIP
18. L.E.D. LIGHTING ON AERIAL LADDER SECTIONS
19. 2-WAY INTERCOM SYSTEM BETWEEN AERIAL TIP AND TURNTABLE
20. LIFTING EYE RESCUE ATTACHMENT AT AERIAL TIP
21. REMOTE MONITOR CONTROLS AT PUMP PANEL
22. NON-RAISED AERIAL PEDESTAL
23. HOSE STORAGE BOX WITH LIFT-UP DOOR SHIPPED LOOSE

REV	DATE	BY	CH
V	28MAR14	TKA	KBO
V	28FEB14	BST	KBO
V	26FEB14	TKA	KBO
V	20DEC13	TKA	GRM

CHASSIS DATA	
MAKE	PIERCE
MODEL	VEL7010

Pierce MANUFACTURING INC.

TITLE	105 AERIAL LADDER & BODY ASSEMBLY (105 PAL) 300 GALLON TANK, 270 GAL. WATER / 30 GAL. FOAM
FOR	AUSTIN FIRE DEPARTMENT AUSTIN, TEXAS
DWG NO.	27566AD

JOB NO.	27566
SCALE	1:24
DATE	
DRAWN BY	TKA 04DEC13
CHECKED BY	GRM 06DEC13
SHEET SIZE	D
SHEET NO.	1 OF 1

View File Created 28-MAR-2014 11:53:35

the Owner and issued by a surety company included within the Department of Treasury's Listing of Approved Sureties (Department Circular 570) with a minimum A.M. Best Financial Strength Rating of A and Size Category of XV. In the event of a bond issued by a surety of a lesser Size Category, a minimum Financial Strength rating of A+ is required.

Bidder and Bidder's surety agree that the Bond issued hereunder, whether expressly stated or not, also includes the surety's guarantee of the vehicle manufacturer's Bumper to Bumper warranty period included within this proposal. Owner agrees that the penal amount of this bond will be simultaneously amended to 25 percent of the total contract amount upon satisfactory acceptance and delivery of the vehicle(s) included herein. Notwithstanding anything contained within this contract to the contrary, the surety's liability for any warranties of any type will not exceed three (3) years from the date of such satisfactory acceptance and delivery, or the actual Bumper to Bumper warranty period, whichever is shorter.

APPROVAL DRAWING

A drawing of the proposed apparatus will be prepared and provided to the purchaser for approval before construction begins. The Pierce sales representative will also be provided with a copy of the same drawing. The finalized and approved drawing will become part of the contract documents. This drawing will indicate the chassis make and model, location of the lights, siren, horns, compartments, major components, etc.

A "revised" approval drawing of the apparatus will be prepared and submitted by Pierce to the purchaser showing any changes made to the approval drawing.

ELECTRICAL WIRING DIAGRAMS

Two (2) electrical wiring diagrams, prepared for the model of chassis and body, will be provided.

VELOCITY™ CHASSIS

The Pierce Velocity is the custom chassis developed exclusively for the fire service. Chassis provided will be a new, tilt type custom fire apparatus. The chassis will be manufactured in the apparatus body builder's facility eliminating any split responsibility. The chassis will be designed and manufactured for heavy duty service, with adequate strength and capacity for the intended load to be sustained and the type of service required. The chassis will be the manufacturer's first line tilt cab.

WHEELBASE

The wheelbase of the vehicle will be 249.0.

GVW RATING

The gross vehicle weight rating will be 76,800 .

Austin Fire Department
2014 Quint

FRAME

The chassis frame will be built with two (2) steel channels bolted to five (5) cross members or more, depending on other options of the apparatus. The side rails will have a 13.38" tall web over the front and mid sections of the chassis, with a continuous smooth taper to 10.75" over the rear axle. Each rail will have a section modulus of 25.992 cubic inches and a resisting bending moment (rbm) of 3,119,040 in-lb over the critical regions of the frame assembly, with a section modulus of 18.96 cubic inches with an rbm of 2,275,200 in-lb over the rear axle. The frame rails will be constructed of 120,000 psi yield strength heat-treated 0.38" thick steel with 3.50" wide flanges.

FRAME REINFORCEMENT

In addition, a mainframe inverted "L" liner will be provided. It will be heat-treated steel measuring 12.00" x 3.00" x 0.25". Each liner will have a section modulus of 7.795 cubic inches, yield strength of 110,000 psi, and rbm of 857,462 in-lb. Total rbm at wheelbase center will be 3,976,502 pounds per rail.

The frame liner will be mounted inside of the chassis frame rail and extend the full length of the frame.

FRONT NON DRIVE AXLE

The Oshkosh TAK-4® front axle will be of the independent suspension design with a ground rating of 22,800 lb.

Upper and lower control arms will be used on each side of the axle. Upper control arm castings will be made of 100,000-psi yield strength 8630 steel and the lower control arm casting will be made of 55,000-psi yield ductile iron.

The center cross members and side plates will be constructed out of 80,000-psi yield strength steel.

Each control arm will be mounted to the center section using elastomer bushings. These rubber bushings will rotate on low friction plain bearings and be lubricated for life. Each bushing will also have a flange end to absorb longitudinal impact loads, reducing noise and vibrations.

There will be nine (9) grease fittings supplied, one (1) on each control arm pivot and one (1) on the steering gear extension.

The upper control arm will be shorter than the lower arm so that wheel end geometry provides positive camber when deflected below rated load and negative camber above rated load.

Camber at load will be zero degrees for optimum tire life.

The ball joint bearing will be of low friction design and be maintenance free.

Toe links that are adjustable for alignment of the wheel to the center of the chassis will be provided.

The wheel ends will have little to no bump steer when the chassis encounters a hole or obstacle.

The steering linkage will provide proper steering angles for the inside and outside wheel, based on the vehicle wheelbase.

The axle will have a third party certified turning angle of 45 degrees. Front discharge, front suction, or aluminum wheels will not infringe on this cramp angle.

FRONT SUSPENSION

Front Oshkosh TAK-4™ independent suspension will be provided with a minimum ground rating of 22,800 lb.

The independent suspension system will be designed to provide maximum ride comfort. The design will allow the vehicle to travel at highway speeds over improved road surfaces and at moderate speeds over rough terrain with minimal transfer of road shock and vibration to the vehicle's crew compartment.

Each wheel will have torsion bar type spring. In addition, each front wheel end will also have energy absorbing jounce bumpers to prevent bottoming of the suspension.

The suspension design will be such that there is at least 10.00" of total wheel travel and a minimum of 3.75" before suspension bottoms.

The torsion bar anchor lock system allows for simple lean adjustments, without the use of shims. One can adjust for a lean within 15 minutes per side. Anchor adjustment design is such that it allows for ride height adjustment on each side.

The independent suspension was put through a durability test that simulated 140,000 miles of inner city driving.

FRONT SHOCK ABSORBERS

KONI heavy-duty telescoping shock absorbers will be provided on the front suspension.

FRONT OIL SEALS

Oil seals with viewing window will be provided on the front axle.

FRONT TIRES

Front tires will be Michelin 425/65R22.50 radials, 20 ply XFE wide base tread, rated for 22,800 lb maximum axle load and 65 mph maximum speed.

The tires will be mounted on 22.50" x 12.25" steel disc type wheels with a ten (10)-stud, 11.25" bolt circle.

REAR AXLE

The rear axle will be a Meritor™, Model RT-52-185, tandem axle assembly with a capacity of 54,000 lb.

An inter-axle differential, which divides torque evenly between axles, will be provided with an indicator light mounted on the cab instrument panel.

TOP SPEED OF VEHICLE
A rear axle ratio will be furnished to allow the vehicle to reach a top speed of 60 mph.

REAR SUSPENSION
Rear suspension will be a Ridewell Dynalastic Model 202S with a ground rating of 54,000 lbs. The suspension will have the following features:

- Individually articulating torque beams pivoted to a compensator providing independent axle movement and steady load distribution

- Utilizes Ultra Torque Rod Plus torque rods

REAR OIL SEALS
Oil seals will be provided on the rear axle.

REAR TIRES
Rear tires will be eight (8) Michelin 12R22.50 radials, 16 ply all position XZE* tread, rated for 54,240 lb maximum axle load and 75 mph maximum speed.

The tires will be mounted on 22.50" x 8.25" steel disc type wheels with a ten (10) stud, 11.25" bolt circle.

TIRE BALANCE
All tires will be balanced with Counteract balancing beads. The beads will be inserted into the tire and eliminate the need for wheel weights.

TIRE PRESSURE MANAGEMENT
There will be a VECSAFE LED tire alert pressure management system provided that will monitor each tire's pressure. A chrome plated brass sensor will be provided on the valve stem of each tire for a total of 10 tires.

The sensor will calibrate to the tire pressure when installed on the valve stem for pressures between 20 and 120 psi. The sensor will activate an integral battery operated LED when the pressure of that tire drops 8 psi.

Removing the cap from the sensor will indicate the functionality of the sensor and battery. If the sensor and battery are in working condition, the LED will immediately start blinking.

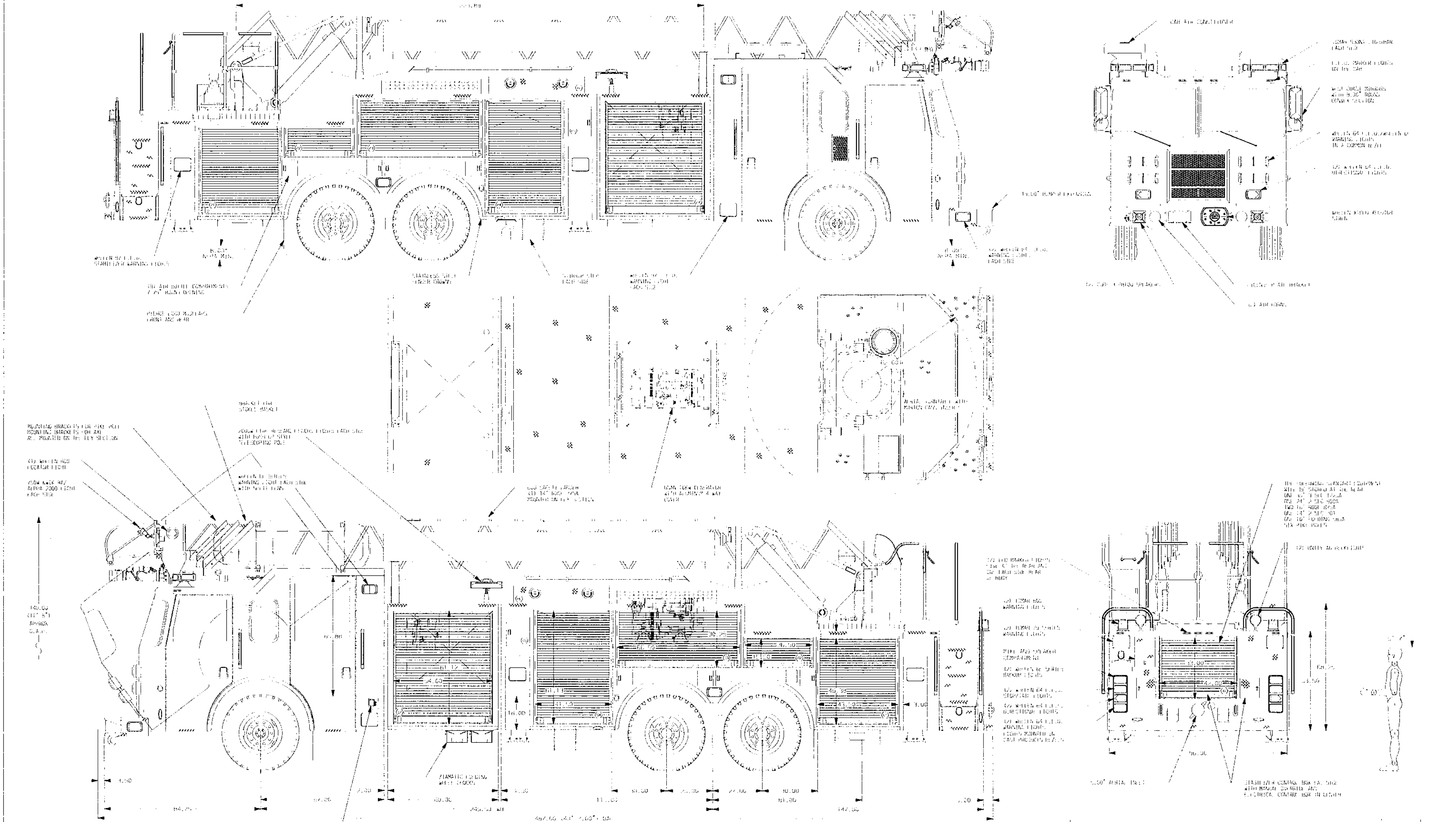

(ALUMINUM BODY)

NOTE

DIMENSIONS SHOWN ARE APPROXIMATE AND ARE SUBJECT TO MINOR DEVIATIONS AS MAY OCCUR OR BE NECESSARY IN CONSTRUCTION.
MINOR DETAILS NOT SHOWN.

1. ALUMINUM TREADPLATE ON CAB ROOF
2. ONE FLOOR MOUNTED SLIDE OUT TRAY IN COMPARTMENTS D1, D4 & P1
3. ONE ADJUSTABLE SHELF IN COMPARTMENTS D1, D3, D4, P1, P3 & P4
4. PERIMETER SCENE LIGHTS LOCATED PER SHOP ORDER
5. CIRCUIT BREAKER PANEL IN COMPARTMENT D7
6. HANNAY ELECTRIC REWIND CORD REEL MODEL ECR 12 IN COMPARTMENTS D7 & P7 WITH 200' OF 12/3 FLAME POWER CABLE, CIRCLE D JUNCTION BOX AND ALUMINUM ROLLER
7. AIR HOSE REEL LOCATED ON THE DRIVER SIDE STEP WELL
8. TWO BAST 2 WAY SLIDE OUT ALUMINUM TOOL BOARDS IN COMPARTMENT D7 & P7
9. ONE ANTENNA MOUNTED ON THE CAB ROOF BEHIND THE LIGHTBAR ON EACH SIDE
10. QUICK LOCK WATERWAY DOCKING SYSTEM
11. 110V POWER TO AERIAL TIP WITH (2) FIRE POWER RECEPTACLES AT TIP
12. REMOTE LADDER CONTROLS AT AERIAL TIP
13. LIGHTING FIRE RESCUE ATTACHMENT AT AERIAL TIP
14. KUSSMAUL BATTERY CHARGER LOCATED IN COMPARTMENT D5

				CUMMINS DATA	TITLE	105' PIERCE AERIAL LADDER & BODY ASSEMBLY (RI 105A) NO WATER TANK / NO PUMP
				CHASSIS	FOR	AUSTIN FIRE DEPARTMENT AUSTIN, TEXAS
				PIERCE		
				MODEL	DRWG.	
REV	DATE	BY	CHK'D	DASH 2110	NO.	

PIERCE MANUFACTURING INC
APPLETON, WISCONSIN

JOB NO.:
SCALE: 1:24
DRAWN BY: TKA
CHK'D BY: JHR
SHEET NO.:
SHEET SIZE: D

Pierce

Manufactured Exclusively For AUSTIN CITY OF JOB #: 13122

DATE OF MANUFACTURE: 03/02

GVWR: 69,500 LBS.

GAWR FRONT: 21,500 LBS. with
425/65R22.5 tires,
22.5X12.25 rims, @ 125 psi cold SINGLE

GAWR REAR: 48,000 LBS. with
11R22.5 H tires,
22.5X8.25 rims, @ 120 psi cold DUAL

CONFORMITY OF THE CHASSIS-CAB TO UNITED STATES FEDERAL MOTOR VEHICLE SAFETY STANDARDS, WHICH HAVE BEEN PREVIOUSLY FULLY CERTIFIED BY THE INCOMPLETE VEHICLE MANUFACTURER OR BY THE INTERMEDIATE VEHICLE MANUFACTURER, HAS NOT BEEN AFFECTED BY FINAL-STAGE MANUFACTURE. THE VEHICLE HAS BEEN COMPLETED IN ACCORDANCE WITH PRIOR MANUFACTURER'S INSTRUCTIONS, WHERE APPLICABLE. THIS VEHICLE CONFORMS TO ALL OTHER APPLICABLE FEDERAL MOTOR VEHICLE STANDARDS IN EFFECT IN 03/02 MO/YR.

CUSTOM HIGH GRADE PAINT FINISH

COLOR: RED

PAINT # 80 SIKKENS AUTOCOAT LV

COLOR: WHITE

PAINT # 10 SIKKENS AUTOCRYL

COLOR: MS-90 #907049

MULTICOLOR SPECIALTIES

VEHICLE IDENTIFICATION NO:
4P1CT02S22A002162

VEHICLE TYPE: FIREFIGHTING TRUCK

IMPORTANT MAINTENANCE INSTRUCTIONS

PERFORM ALL SUGGESTED MAINTENANCE ITEMS OUTLINED IN THE CHASSIS OPERATION MANUAL AT THE RECOMMENDED TIME INTERVALS.

DEVICE	QTY	FLUID
ENGINE: SERIES 60	41 QTS	15W40 CG-4
TRANSMISSION: HD 3040P	[illegible] QTS	DEXRON IIE
COOLANT	[illegible] QTS	50% ANTIFREEZE (ethylene glycol)
POWER STEERING	8 QTS	DEXRON-II
REAR AXLE	34.4 PNTS	80W90 GEAR LUBE
FRONT AXLE (NON DRIVE)	[illegible] PNTS	85W90 GEAR LUBE
FRONT AXLE (DRIVE)	[illegible] QTS	80W90 GEAR LUBE
CAB TILT	1 GAL	ATF
GENERATOR (Crankcase oil capacity) (Refer to owners manual for temperature range)	5.5 QTS	15W40
TRANSFER CASE		
EQUIPMENT RACK - PER RESERVOIR	N/A	
WATEROUS PUMP TRANSMISSION	N/A	ATF DEXRON III
WALE PUMP PRIMER	N/A	PRIME SAFE

Austin, TX Office:

3737 Executive Center Drive, Suite 255
Austin, TX 78731-1633
P: 512-219-4075 F: 512-219-4077

August 31, 2017

Karim Helmi, P.E.
City of Austin – Public Works Department
105 Riverside Drive, Suite 100 Phone: 512-974-6539
Austin, TX 78704 Email: Karim.Helmi@austintexas.gov

Alejandro Wolniewitz
Austin Fire Department
4201 Ed Bluestein Boulevard Phone: 512-974-1286
Austin, TX 78721 Email: Alejandro.Wolniewitz@austintexas.gov

Feasibility Study Report – Austin Fire Department Fire Stations Nos. 3 and 22
Fire Station No. 3 – 201 W. 30th St., Austin, TX
Fire Station No. 22 – 5309 E. Riverside Dr., Austin, TX
CTLGroup Project No. 231701, Phase 2

Dear Mr. Helmi and Mr. Wolniewitz:

Based on the work performed during Phase 1 of this project, it was determined that the garage floor systems at both fire stations lack adequate strength to support the anticipated vehicular loads. The City of Austin (COA) requested that a repair design be developed to strengthen the existing floor systems. In order to properly identify repair requirements and a strengthening solution, a feasibility study was performed on the floor systems at each fire station garage (Phase 2). The following tasks were performed as part of Phase 2 for this project:

- CTLGroup obtained additional core samples for compressive strength testing and carbonation depth testing. As discussed in our Phase 1 report, the purpose of the additional core sampling and subsequent compressive strength testing was to reduce the scatter of core strength data. This allows for more representative compressive strength values to be used in the structural analysis and subsequent repair design. Also as discussed in our Phase 1 report, carbonation could be an issue at Fire Station No. 3. The extent of carbonation will influence our repair recommendations and carbonation depth testing was performed to evaluate this condition.
- The preliminary structural analysis performed during Phase 1 of this project was updated to include the revised compressive strength values. It should also be noted that liberal assumptions were purposely made in our analysis during Phase 1 to study whether the floor systems could support the anticipated vehicular loads in a favorable condition. For Phase 2, these liberal assumptions were replaced by more conservative assumptions (where applicable/appropriate per code requirements). The capacity and demand values for the beams at both fire stations were also calculated as part of Phase 2.
- Based on the results of our testing and structural analysis, the feasibility of various repair options was evaluated.

CTLGroup's Phase 1 report was issued on May 12, 2017. Please refer to this report for additional information regarding this project, including background information. The following report summarizes the findings from our feasibility study.

SITE WORK

CTLGroup re-visited the fire stations on June 14 and 15, 2017 (Fire Station No. 22), and June 16 and 19, 2017 and July 28, 2017 (Fire Station No. 3). The following CTLGroup staff members were present during the site visits: Bradley East, P.E. and Jonathan Poole, Ph.D., P.E. (June 15, 2017 only). Various Austin Fire Department personnel were present during CTLGroup's site visits.

During the site visits, additional cores were taken through the slab/joists and beams at Fire Station No. 22, and slab/beam at Fire Station No. 3. As previously discussed, the additional core samples were obtained for compressive strength testing and carbonation depth testing. The core samples were extracted by Texas Cutting and Coring, L.P. The cores were extracted in general accordance with ASTM C42[1]. Following the removal of the cores, all core holes were patched by CTLGroup using a non-shrink grout material.

Additional Ground Penetrating Radar (GPR) scans were also performed to confirm shear reinforcing and to more accurately identify the locations and lengths of negative moment reinforcing (Fire Station No. 3). One particular item of note was that no discernible shear reinforcing was detected in the middle beams at Fire Station No. 3. The middle beams were scanned from both the sides and underside.

The core locations and reinforcing details are included on the drawings in **Appendix A**. These drawings have been updated/revised since issuance of our Phase 1 report.

SUMMARY OF LABORATORY TESTING

COMPRESSIVE STRENGTH TESTING

Compressive strength tests in general accordance with ASTM C42 were performed on the additional core samples obtained during Phase 2. At fire station No. 22, compressive strength tests were performed on core samples C10 and C11 (joist), and C13 through C18 (beam). At Fire Station No. 3, compressive strength tests were performed on core samples C6 through C14 (slab/beam). CTLGroup's compressive strength testing reports for Phase 2 can be found in **Appendix B** at the end of this report.

A statistical adjustment was applied to the core strength data (from Phases 1 and 2) in general accordance with ACI 214.4R[2]. The purpose of this adjustment was to convert the core strength data to an equivalent design compressive strength value. The equivalent compressive strength used for design purposes "is the lower tenth percentile of the in-place strength and is consistent with the statistical description of the specified compressive strength of concrete". Two methods are presented in ACI 214.4R for estimating the equivalent strength. For reference purposes, the Tolerance Factor Method with a 75% confidence level was used during our analysis. It should also be noted that during the statistical analysis the core data was evaluated for outliers in general accordance with ASTM E178[3]. One (1) outlier was discarded from the slab/beam core strength data sample from Fire Station No. 3.

---

[1] ASTM C42 "Standard Test Method for Obtaining and Testing Drilled Cores and Sawed Beams of Concrete"

[2] ACI 214.4R-10 "Guide for Obtaining Cores and Interpreting Compressive Strength Results"

[3] ASTM E178 "Standard Practice for Dealing with Outlying Observations"

The equivalent strengths of the floor system elements at each fire station are summarized below in Table 1. As previously discussed, the preliminary structural analyses performed during Phase 1 of this project were updated based on these values.

Table 1 – Summary of equivalent design compressive strengths

Element		Equivalent Compressive Strengths, f'c (psi)
Fire Station No. 22	Joists	4823
	Beams	4572
Fire Station No. 3	Slab/Beams	2639

CARBONATION DEPTH TESTING

Carbonation is the reaction between CO_2 in the air and the hydrated cement paste, generally the calcium hydroxide ($Ca(OH)_2$, or CH in cement chemistry notation). In dense, well consolidated and properly cured concrete, carbonation is a slow reaction that generally occurs over many years. This reaction converts the CH to calcium carbonate ($CaCO_3$), which reduces the pH of the concrete and can lead to the depassivation of the steel. Depassivation of the steel allows corrosion to occur.

Carbonation depth tests in general accordance with ASTM C 856[4] were performed on core samples obtained/collected during Phases 1 and 2. This includes Cores C5, C14, C15 and C16 from Fire Station No. 3, and Core C12 from Fire Station No. 22. The following are items of note regarding the tested samples:

- The tested sample for Core C14 at Fire Station No. 3 was a partial sample. Only the bottom approximately 0.9 in. of the original core underwent testing.
- Core C5 at Fire Station No. 3 was collected during Phase 1. This core had been drilled by others prior to CTLGroup's involvement with this project (likely for plumbing/mechanical purposes) and had been left onsite. This core had not been extracted from garage floor framing, but rather from concrete framing in another area of the fire station.
- Core C12 at Fire Station No. 22 was originally a core taken through both the topping slab and precast joist flange at the garage area. The bottom approximately 0.3 in. of the sample had been removed prior to carbonation depth testing. Only the carbonation depth of the precast concrete was tested.

The carbonation depth test reports can be found in **Appendix B** at the end of this report. To summarize, carbonation depth testing indicates that the bottom portion of the slab concrete in the garage area at Fire Station No. 3 is significantly carbonated. The carbonation depths exceed the bottom concrete cover in the slab (i.e. distance from the underside of the slab to the surface of the bottom layer of reinforcing steel). The extent of carbonation in the slab/beam concrete in the garage area at Fire Station No. 3 is not known; however, carbonation was

[4] ASTM C856 "Standard Practice for Petrographic Examination of Hardened Concrete"; an abbreviated version of this test standard was performed pertaining to paste carbonation; a full petrographic examination was not performed on these core samples.

detected in all three (3) samples tested from this area. Minimal to no carbonation was detected in samples C5 from Fire Station No. 3 and C12 from Fire Station No. 22.

STRUCTURAL ANALYSES

As previously discussed, the preliminary structural analyses performed during Phase 1 of this project were updated/revised to include equivalent design compressive strength values for the concrete. Additionally, our assumptions were modified to reflect typical design standards rather than favorable conditions. The results/calculations from our analyses can be found in **Appendices C and D** at the end of this report. The methodology used to calculate the capacities of the various structural elements and the demands placed on these elements was similar for both fire stations, which includes the following:

- The flexural capacities of the various structural elements were computed using StructurePoint[5] software in accordance with ACI 318-14[6].
- The shear capacities of the various structural elements were calculated in general accordance with ACI 318-14.
- Analyses were performed using SAP2000[7] software on both the slab and joists at Fire Station Nos. 3 and 22, respectively. The shear, flexure and end reaction envelopes for these elements were determined based on this analysis. Trucks were assumed to occupy either centered as well as left-of-center or right-of-center positions within each bay.
- Based on the end reaction envelopes of the slab and joists at Fire Station Nos. 3 and 22, respectively, a load distribution ratio was determined for the beams at both fire stations (i.e. percent of axle load distributed to the beams).
- Taking into consideration the load distribution ratio, a moving wheel load analysis in the longitudinal direction was performed on the beams at each fire station using SAP2000 software. The shear and moment envelopes for the beams were determined based on this analysis.
- From the shear and moment envelopes, the maximum moment and shear demands on the various structural elements were determined. The demand capacity ratios were then calculated.

In addition to the above methodology, the following conditions and assumptions were included in our analyses:

General

- Since issuance of our Phase 1 report, CTLGroup received clarification on the anticipated vehicles that will operate from each fire station. At Fire Station No. 22 this includes a Pierce 105' Heavy Duty Aerial Ladder with water tank (Job No. 27566) and a Pierce Impel Pumper (Job No. 25403). At Fire Station No. 3 this includes a Pierce 105' Heavy

---

[5] StructurePoint, LLC, https://www.structurepoint.org/; computer software for the analysis and design of reinforced concrete structures.

[6] ACI 318-14 "Building Code Requirements for Structural Concrete"

[7] Computers and Structures, Inc., SAP200 software

Duty Aerial Ladder with water tank (Job No. 27566) and a Pierce Velocity Pumper (Job No. 29905). The dimensions and weights associated with these vehicles were used in our analyses. These specifications can be found in the structural analyses packet included in **Appendices C and D**.

- The loads considered in the structural analyses included the self-weight of the concrete elements and the axle weights of the above vehicles.

Fire Station No. 3

- As previously discussed, no discernible shear reinforcing was detected in the middle beams at Fire Station No. 3. As a result, it was assumed in our analyses that there was no shear reinforcement in the middle beams at Fire Station No. 3.

Fire Station No. 22

- Additional non-destructive testing (NDT) would need to be performed on the slab at Fire Station No. 22 to adequately evaluate the extent of composite action between the existing topping slab and joists. However, of all the cores taken through both the topping slab and joists at this fire station, approximately half were de-bonded. Additionally, visual evaluation of the joist cores indicates that there was minimal roughening of the top surface of the joists. Therefore, it was conservatively assumed that there was no composite action between the existing topping slab and joists in our analyses.
- Extensive cracking was observed in the topping slab at Fire Station No. 22. Therefore, the non-composite cracked topping was considered incapable of distributing wheel loads between adjacent joists.
- The joists at Fire Station No. 22 frame into the sides of the beams. CTLGroup found no evidence to indicate that there were any tie-bars (or similar) connecting the joists to the beams. As a result, the joists were assumed to be simply supported.
- Welded wire reinforcement (WWR) was found in the stems/webs of the joists at Fire Station No. 22. Since code requires multiple cross-wires of WWR in order to provide full development, at best only partial development of WWR would be effective in joists.

Based on our analyses, various elements of both fire stations lack the necessary capacity to support the anticipated vehicular loads. Tables 2 to 4 below summarize the capacities of the various structural elements, the load demands placed on these elements, and the Demand Capacity Ratios (DCR). A DCR greater than 1.0 indicates a strength deficiency.

Table 2 –Capacities at Fire Station Nos. 22 and 3

Element		Capacities		
		Shear (kips)	Positive Moment (k-ft)	Negative Moment (k-ft)
Fire Station No. 22	Joists	7.6	35.4	N/A
	North Beam	60.0	385.5	385.5
	Middle Beam	115.5	470.2	470.2
	South Beam	82.9	374.4	374.4
Fire Station No. 3	Slab	49.5	45.6	45.3
	West Beam	40.9	67.9	64.4
	Middle Beams	23.6	89.1	90.3

Table 3 –Demands at Fire Station Nos. 22 and 3

Element		Demands		
		Shear (kips)	Positive Moment (k-ft)	Negative Moment (k-ft)
Fire Station No. 22	Joists	37.0	118.6	N/A
	North Beam	60.8	202.2	173.3
	Middle Beam	130.5	320.9	401.2
	South Beam	74.6	192.5	158.9
Fire Station No. 3	Slab	66.3	98.0	112.0
	West Beam	44.4	48.3	58.3
	Middle Beams	91.1	184.7	189.7

Table 4 –Demand Capacity Ratios (DCR) at Fire Station Nos. 22 and 3. Values in red have a strength deficiency

Element		DCR		
		Shear	Positive Moment	Negative Moment
Fire Station No. 22	Joists	4.83	3.35	N/A
	North Beam	1.01	0.52	0.45
	Middle Beam	1.13	0.68	0.85
	South Beam	0.90	0.51	0.42
Fire Station No. 3	Slab	1.34	2.15	2.47
	West Beam	1.09	0.71	0.91
	Middle Beams	3.86	2.07	2.10

DISCUSSION OF REPAIR OPTIONS

FIRE STATION NO. 3

The underside of the slab was spalled at several locations. At several spalled areas, the reinforcing steel was exposed and visibly corroded/rusted, likely indicative of carbonation-induced corrosion. Carbonation depth testing performed by CTLGroup further confirms that carbonation is an issue of concern in the garage area at Fire Station No. 3. Due to the depth of carbonation, the future service life of the garage floor system could be limited. However, additional testing and service life modeling would be needed to more accurately estimate the functional lifespan of the garage floor system.

Considering the slab thickness, it would be difficult to repair existing areas of corroded reinforcing without the repair extending through the full depth of the slab. Additional NDT work would also be needed to determine the full extent of existing corroded reinforcing. Additionally, preventing future carbonation-induced corrosion (such as with cathodic protection) would add considerable cost to any repair/strengthening program.

The slab and middle beams at Fire Station No. 3 are considerably deficient with respect to supporting the anticipated vehicular loads (see Table 4). The slab is overloaded by nearly 150% in flexure. The middle beams are overloaded by nearly 300% in shear and nearly 100% in flexure. Due to the degree to which the slab and middle beams are overloaded in conjunction with the presence of carbonation-induced corrosion, we do not believe that repair/strengthening of the garage floor system at Fire Station No. 3 can be accomplished in a cost-effective manner without substantial replacement of framing elements.

CTLGroup proposes two (2) options to address the strength deficiency and carbonation issue, which includes the following:

1. Remove and replace large portions of the existing floor system, or
2. Fill the crawlspace beneath the garage area with a cementitious flowable fill material.

With regard to removal and replacement, this will require the removal of the slab and middle beams in the garage area. The west beam, perimeter foundation walls, and columns can likely remain in place. A new monolithic slab/beam system would be designed and constructed such that it would tie into these existing elements. In lieu of a cast-in-place monolithic slab/beam system, structural precast members could also be considered. If the City of Austin decides to replace the garage floor system, CTLGroup is available to design its replacement and provide details and drawings for construction phase services. This work would be performed as part of Phase 3 of this project. Some geotechnical investigation may be necessary to demonstrate adequacy of existing foundations. As an alternative to this repair option, the City may also consider replacement of the entire bay area of the fire station. This would allow other upgrades including increasing overhead clearance.

With regard to Option 2, the existing garage floor system at Fire Station No. 3 would remain in place and the crawlspace area beneath the garage would be filled with a cementitious flowable fill material. In this scenario, the garage floor system would generally function as a slab-on-grade type system. The slab and middle beams would no longer be suspended, and as a result the strength deficiencies in these elements would no longer be a concern. This is likely the

fastest and least disruptive remedy. However, depending on the soil characteristics at the subject site, this option may not be possible. Specifically, expansive soil is common in the Austin area. The void underneath the slab systems provides protection against differential soil movement due to moisture variations in the soil. Filling the void beneath the slab could compromise this protection.

Based on a preliminary review of the soils at the subject site, the structure is situated on "Urban land" according to the United States Department of Agriculture (USDA) Web Soil Survey[8]. No additional information is provided for this soil. This includes the plasticity index which generally governs a soil's shrink/swell potential. Geotechnical borings and a soil evaluation would be needed to determine the precise characteristics of the foundation subgrade. If the City of Austin desires to explore this option further, CTLGroup can arrange for a geotechnical evaluation as part of Phase 3 of this project.

FIRE STATION NO. 22

CTLGroup considered multiple repair/retrofit options as repair strengthening solutions for the floor framing at Fire Station No. 22. However, the extent of deficiencies present in the existing floor system results in a relatively complex and expensive repair/strengthening program. Repair/strengthening requirements included the following:

- Replacement of the existing, poorly bonded topping slab,
- Shear strengthening of existing joists, and
- Flexural strengthening of existing joists.

The current 3.5 in. topping slab is not a reliable composite overlay. To achieve a sound composite overlay system, the current topping would need to be removed, the top of the existing joist flanges would need to be roughened to an approximately ¼ in. amplitude, and a new composite topping slab would need to be installed. However, the existing joist flange thickness is only 1½ in. Removing the topping and roughening the top of joist flange would likely involve damaging the existing joist flange. Repairing damaged joist flanges would be difficult and would increase the cost and duration of the retrofit.

The joists are potentially overloaded in shear by over 400%. Shear strengthening of existing joists could potentially be accomplished by use of FRP reinforcing, or installation of external threaded rod reinforcement. FRP is a composite material composed of a polymer matrix that is reinforced with high strength fibers. As a repair material for concrete, the fibers typically consist of carbon or glass. FRP can be installed by laying dry fabric into uncured epoxy resin or by adhering FRP laminates to existing concrete framing. However, there are limits to the extent of strengthening that can be accomplished with FRP. ACI 440.2R[9] that governs the use of FRP as an externally applied repair material for concrete structures requires that "the unstrengthened structural member, without FRP reinforcement, should have sufficient strength to resist a certain level of load". More specifically, the standard generally requires that the concrete member be able to support 75% of the service live load (i.e. the vehicular wheel loads) in addition to the

[8] USDA, "Web Soil Survey," http://websoilsurvey.sc.egov.usda.gov/App/WebSoilSurvey.aspx (accessed August 17, 2017).

[9] ACI 440.2R "Guide for the Design and Construction of Externally Bonded FRP Systems for Strengthening Concrete Structures"

dead load (i.e. self-weight of the concrete). The extent of strength deficiencies in the floor framing is greater than this threshold.

Shear strengthening by use of external threaded rods would involve installing threaded rods through the 1 in. space between adjacent joists. The rods would be secured to the joists with steel plates and nuts at both the tops and bottoms of the joists. The top plates would be embedded/encased in the topping composite slab concrete. While this is a viable repair methodology, the extent of strengthening required in some areas compromises the practicality of this repair.

Flexural strengthening of the joists would require a strengthening level that also prohibits use of FRP reinforcing alone. The most practical method of strengthening appeared to be thickening the concrete overlay. This, however, would reduce overhead clearance, thereby requiring retrofit of overhead doors to accommodate the thickened overlay. Transitions would also be necessary where the garage meets other portions of the fire station.

Thus, addressing each deficiency would result in a complex and expensive retrofit program. Therefore, similar to Fire Station No. 3, CTLGroup proposes two (2) options to address the strength deficiency in the floor framing at Fire Station No. 22, which include the following:

1. Remove and replace the existing topping slab and joists in the garage area, or
2. Fill the crawlspace beneath the garage area with a cementitious flowable fill material

Removal and replacement would be limited to the topping slab and joists. The beams can remain in place with limited strengthening. A new joist/slab system would be designed and constructed such that it would tie into the existing beams. It would likely be most practical to replace the joists with custom precast members. If the City of Austin decides to replace the joists and slab at the garage area, CTLGroup is available to design its replacement and provide details and drawings for construction phase services. This work would be performed as part of Phase 3 of this project. Some geotechnical investigation may be necessary to demonstrate adequacy of existing foundations. As an alternative to this repair option, the City may also consider replacement of the entire bay area of the fire station. This would allow other upgrades including increasing overhead clearance.

With regard to Option 2, the existing garage floor system at Fire Station No. 22 could remain in place and the crawlspace area beneath the garage would be filled with a cementitious flowable fill material. As discussed above, expansive clay could make this option not feasible. Geotechnical borings and a soil evaluation would be needed to determine the precise characteristics of the existing subgrade. If the City of Austin desires to explore this option further, CTLGroup can arrange for a geotechnical evaluation as part of Phase 3 of this project.

CLOSING

Thank you for the opportunity to assist you on this project. Please do not hesitate to let me know if you have any questions or concerns, or need any additional information.

Peter R. Kolf
Principal Structural Engineer
PKolf@CTLGroup.com
Phone: (847) 972-3214

Hamid R. Lotfi
Senior Engineer
HLotfi@CTLGroup.com
Phone: (847) 972-3206

August 31, 2017

Jonathan L. Poole, Ph.D., P.E.
Principal Engineer
JPoole@CTLGroup.com
P. 512-219-4075

COA# F3849

Appendix A

Plan Views and Cross-Section Details

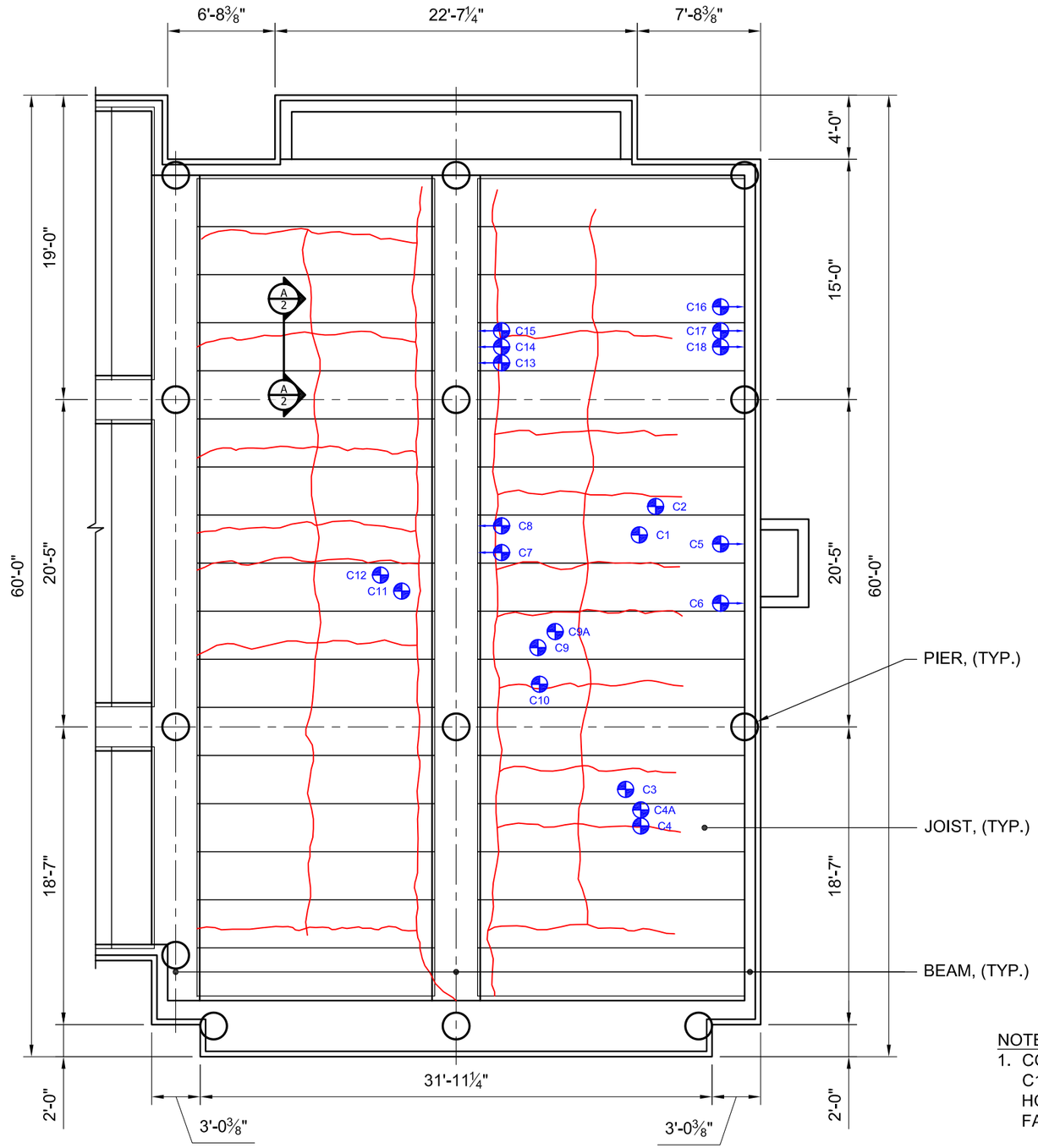

N

1 GARAGE FLOOR PLAN

1/8" = 1'-0"

NOTE:

1. CORES C5, C6, C7, C8, C13, C14, C15, C16, C17, & C18 TAKEN HORIZONTALLY THROUGH BEAM FACE.

LEGEND:

SLAB TOPSIDE CRACKING

C# CORE LOCATION

CTLGROUP

CONSTRUCTION TECHNOLOGY LABORATORIES
ENGINEERS & CONSTRUCTION TECHNOLOGY CONSULTANTS

3737 Executive Center Dr., Suite 255
Austin, TX 78731-1633
Phone: 512-219-4057 Fax: 512-219-4077
www.CTLGroup.com

CTLGroup COA No.: F-3849

Austin Fire Department - Station #22

5309 E. Riverside Drive
Austin, TX 78741

Structural Floor System Capacity Assessment

ISSUE

No.	Description	Date

CTLGroup No.: **231701**
Drawn: **SEH**
Checked: **BLE**
Date: **25AUG17**
Scale: **AS SHOWN**

Title:
Garage Floor Plan

Sheet No.:

1

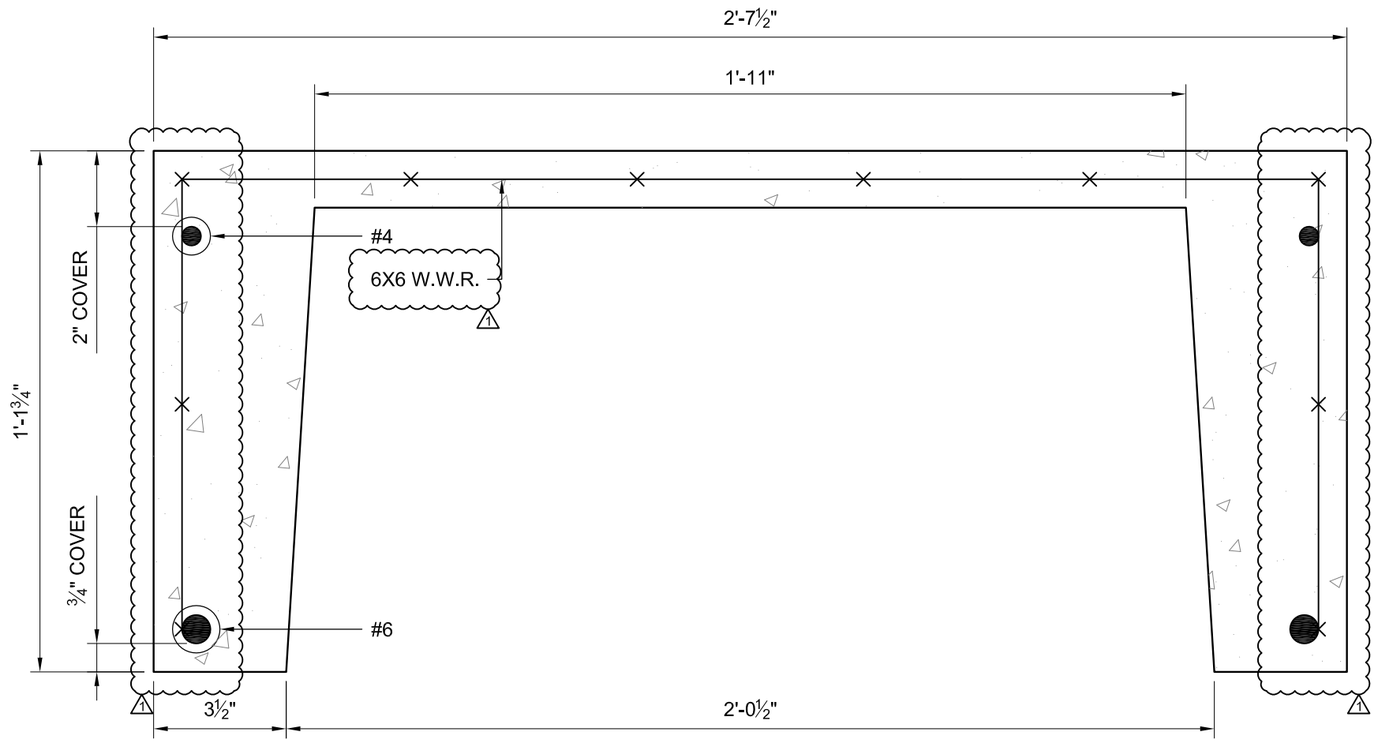

1 SECTION A-A
3" = 1'-0"

CTLGROUP
CONSTRUCTION TECHNOLOGY LABORATORIES
ENGINEERS & CONSTRUCTION TECHNOLOGY CONSULTANTS

3737 Executive Center Dr., Suite 255
Austin, TX 78731-1633
Phone: 512-219-4057 Fax: 512-219-4077
www.CTLGroup.com

CTLGroup COA No.: F-3849

Austin Fire Department - Station #22

5309 E. Riverside Drive
Austin, TX 78741

Structural Floor System Capacity Assessment

ISSUE

No.	Description	Date
1	Revision No. 1	25AUG17

CTLGroup No.: **231701**
Drawn: **SEH**
Checked: **BLE**
Date: **12MAY17**
Scale: **AS SHOWN**

Title:
Section Detail of Precast Joist

Sheet No.:

2

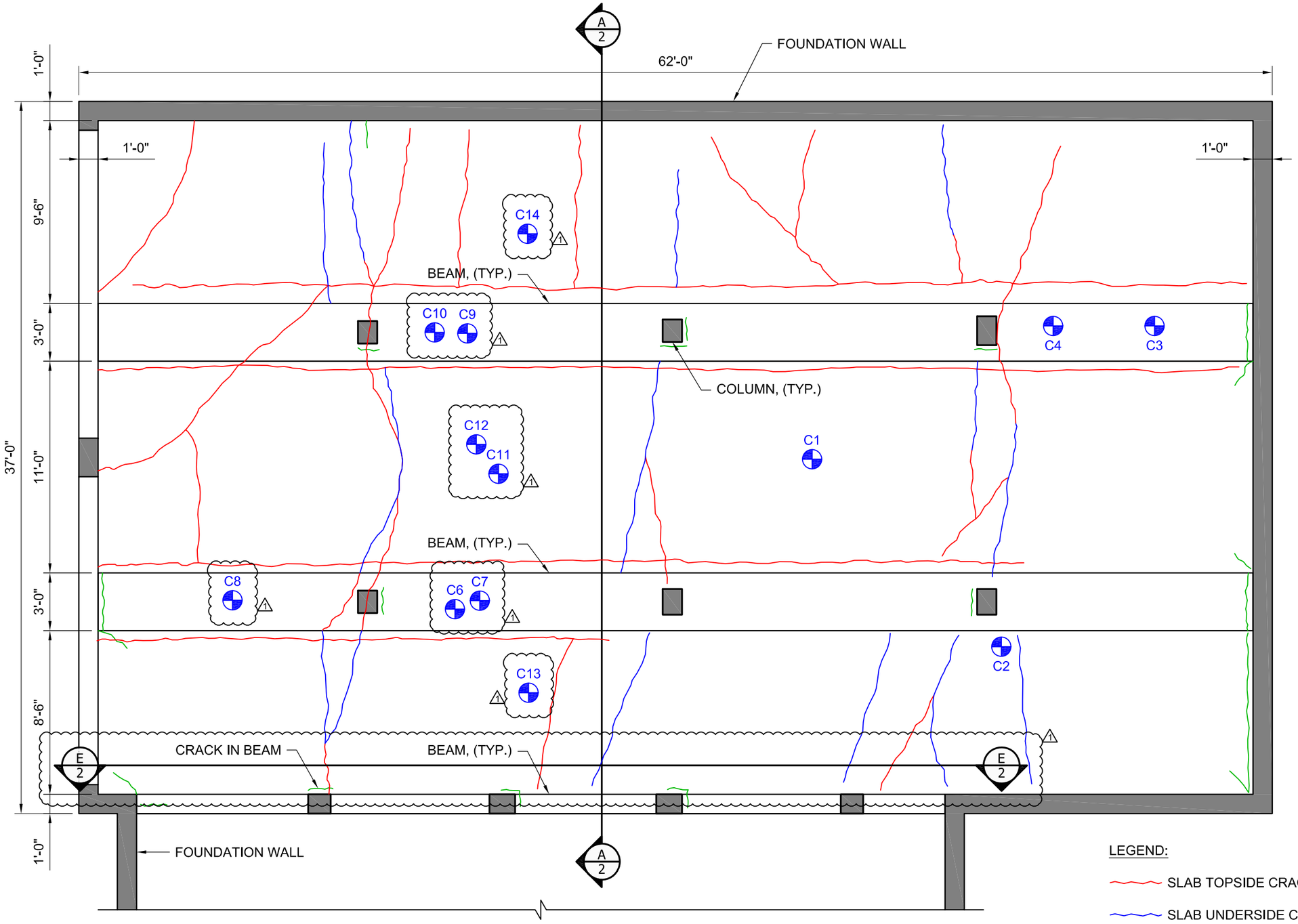

N

1 GARAGE FLOOR PLAN
3/16" = 1'-0"

LEGEND:

SLAB TOPSIDE CRACKING

SLAB UNDERSIDE CRACKING

COLUMN/FOUNDATION WALL CRACKING (U.N.O.)

C# CORE LOCATION

CTLGROUP

CONSTRUCTION TECHNOLOGY LABORATORIES
ENGINEERS & CONSTRUCTION TECHNOLOGY CONSULTANTS

3737 Executive Center Dr., Suite 255
Austin, TX 78731-1633
Phone: 512-219-4057 Fax: 512-219-4077
www.CTLGroup.com

CTLGroup COA No.: F-3849

Austin Fire Department - Station #3

201 W. 30th Street
Austin, TX 78701

Structural Floor System Capacity Assessment

ISSUE

No.	Description	Date
1	Revision No. 1	25AUG17

CTLGroup No.: **231701**

Drawn: **SEH**

Checked: **BLE**

Date: **12MAY17**

Scale: **AS SHOWN**

Title:
Garage Floor Plan

Sheet No.:

1

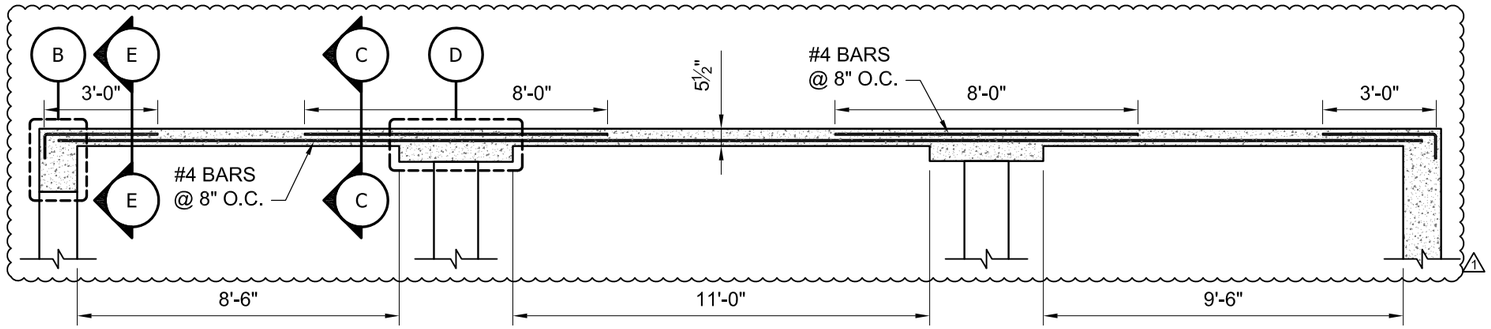

1 SECTION A-A
1/4" = 1'-0"

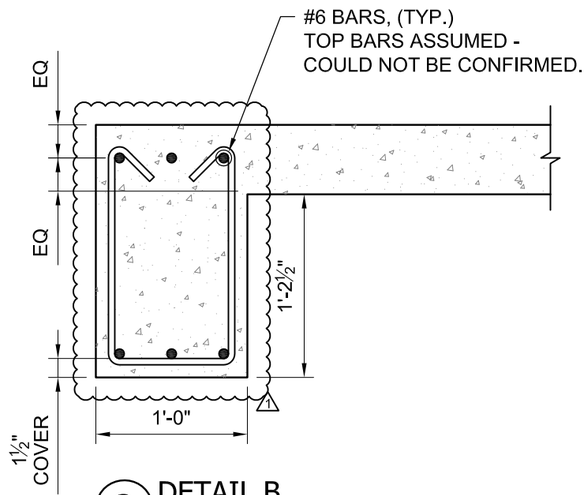

2 DETAIL B
1" = 1'-0"

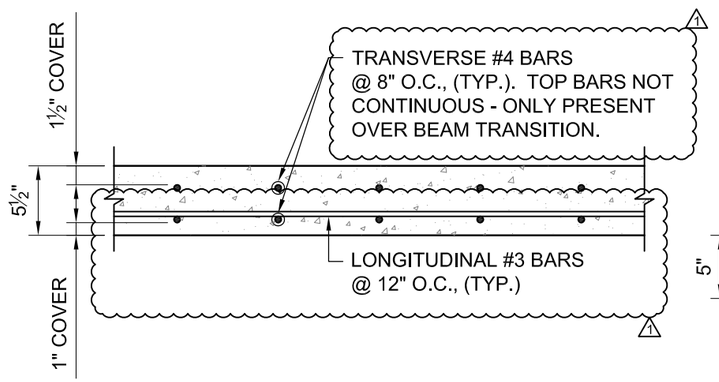

3 SECTION C-C
1" = 1'-0"

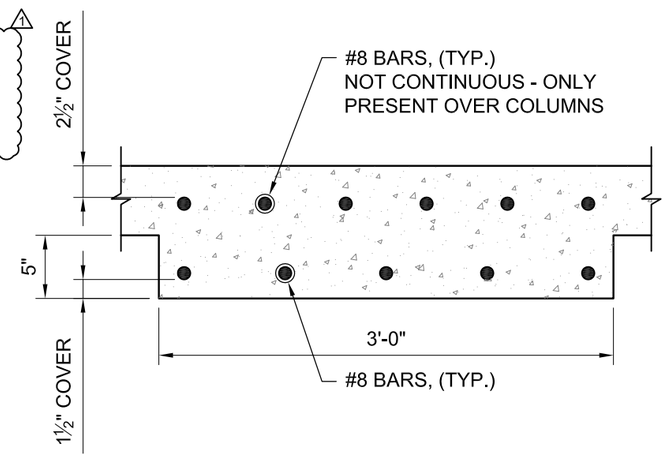

4 DETAIL D
1" = 1'-0"

NOTE:
1. NO SHEAR REINFORCEMENT DETECTED IN MIDDLE BEAMS.

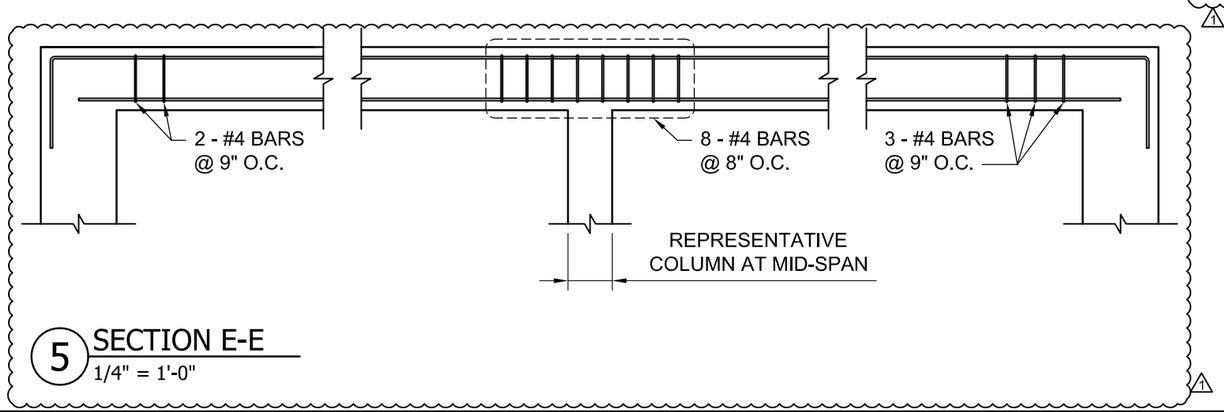

5 SECTION E-E
1/4" = 1'-0"

CTLGROUP
CONSTRUCTION TECHNOLOGY LABORATORIES
ENGINEERS & CONSTRUCTION TECHNOLOGY CONSULTANTS

3737 Executive Center Dr., Suite 255
Austin, TX 78731-1633
Phone: 512-219-4057 Fax: 512-219-4077
www.CTLGroup.com

CTLGroup COA No.: F-3849

Austin Fire Department - Station #3

201 W. 30th Street
Austin, TX 78701

Structural Floor System Capacity Assessment

ISSUE

No.	Description	Date
1	Revision No. 1	25AUG17

CTLGroup No.: **231701**
Drawn: **SEH**
Checked: **BLE**
Date: **12MAY17**
Scale: **AS SHOWN**

Title:
Garage Details

Sheet No.:
2

Appendix B

Laboratory Test Results

Client:	**City of Austin**	CTLGroup Project No.:	**231701**
Project Name:	**Austin Fire Department Stations 3 & 22**	CTLGroup Project Mgr.:	**Bradley East**
	Structural Capacity Assessment	Analyst:	**WD, CA**
Contact:	**Karim Helmi**	Approved by:	**Bradley East**
Submitter:	**Bradley East**	Date Analyzed:	**June 27, 2017**
Date Received:	**June 21, 2017**	Date Reported:	**June 28, 2017**

ASTM C42 Standard Test Method for Obtaining and Testing Drilled Cores and Sawed Beams of Concrete
Section 7: Cores for Compressive Strength

Specimen Identification

CTLGroup Identification	4475701	4475702	4475703
Client Identification	No. 3-C6	No. 3-C7	No. 3-C8
Date Core Obtained from the Field	Not Stated	Not Stated	Not Stated
Date end preparation was completed and core was placed in sealed bag	6/22/17	6/22/17	6/22/17
Date Core was Tested	6/27/17	6/27/17	6/27/17

Concrete Description

Nominal Maximum Aggregate Size, in.	3/4	3/4	3/4
Concrete Age at Test	~65 years	~65 years	~65 years
Moisture Condition at Test	Per Standard	Per Standard	Per Standard
Length of Core, As Drilled, in.	6 1/2	7	6 3/4
Orientation of Core Axis in Structure	Vertical	Vertical	Vertical
Cylinder End Preparation	Capped	Capped	Capped

Concrete Dimensions

Diameter 1, in.	2.74	2.74	2.74
Diameter 2, in.	2.74	2.74	2.74
Average Diameter, in.	2.74	2.74	2.74
Cross-Sectional Area, in^2	5.90	5.90	5.90
Length Trimmed, in.	5.2	5.2	5.2
Length Capped, in.	5.3	5.3	5.4
Density, pcf	140	142	139

Compressive Strength and Fracture Pattern

Maximum Load, lb	17,620	18,006	15,659
Uncorrected compressive Strength, psi	2,990	3,050	2,650
Ratio of Capped Length to Diameter	1.95	1.95	1.97
Corrected Compressive Strength, psi	2,990	3,050	2,650
Fracture Pattern	Type 4	Type 1	Type 1

Schematic of Typical Fracture Patterns

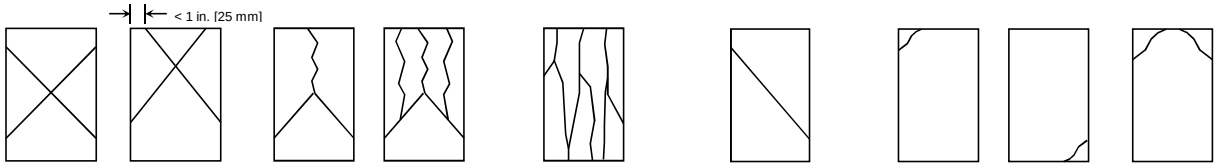

Type 1
Reasonable well-formed cones on both ends, less than 1 in. [25 mm] of cracking through caps

Type 2
Well-formed cone on one end, vertical cracks running through caps, no well-defined cone on other end

Type 3
Columnar vertical cracking through both ends, no well-formed cones

Type 4
Diagonal fracture with no cracking through ends; tap with hammer to distinguish from Type I

Type 5
Side fractures at top or bottom (occur commonly with unbonded caps)

Type 6
Similar to Type 5 but end of cylinder is pointed

Notes:
1. This report may not be reproduced except in its entirety.

Client:	**City of Austin**	CTLGroup Project No.:	**231701**
Project Name:	**Austin Fire Department Stations 3 & 22**	CTLGroup Project Mgr.:	**Bradley East**
	Structural Capacity Assessment	Analyst:	**WD, CA**
Contact:	**Karim Helmi**	Approved by:	**Bradley East**
Submitter:	**Bradley East**	Date Analyzed:	**June 27, 2017**
Date Received:	**June 21, 2017**	Date Reported:	**June 28, 2017**

ASTM C42 Standard Test Method for Obtaining and Testing Drilled Cores and Sawed Beams of Concrete
Section 7: Cores for Compressive Strength

Specimen Identification

CTLGroup Identification	4475704	4475705	4475706
Client Identification	No. 3-C9	No. 3-C10	No. 3-C11
Date Core Obtained from the Field	Not Stated	Not Stated	Not Stated
Date end preparation was completed and core was placed in sealed bag	6/22/17	6/22/17	6/22/17
Date Core was Tested	6/27/17	6/27/17	6/27/17

Concrete Description

Nominal Maximum Aggregate Size, in.	3/4	3/4	3/4
Concrete Age at Test	~65 years	~65 years	~65 years
Moisture Condition at Test	Per Standard	Per Standard	Per Standard
Length of Core, As Drilled, in.	6 1/2	6 3/4	5 1/4
Orientation of Core Axis in Structure	Vertical	Vertical	Vertical
Cylinder End Preparation	Capped	Capped	Capped

Concrete Dimensions

Diameter 1, in.	2.74	2.74	2.74
Diameter 2, in.	2.74	2.74	2.74
Average Diameter, in.	2.74	2.74	2.74
Cross-Sectional Area, in^2	5.90	5.90	5.90
Length Trimmed, in.	5.2	5.2	5.2
Length Capped, in.	5.4	5.3	5.4
Density, pcf	140	141	141

Compressive Strength and Fracture Pattern

Maximum Load, lb	15,534	15,388	18,126
Uncorrected compressive Strength, psi	2,630	2,610	3,070
Ratio of Capped Length to Diameter	1.96	1.95	1.96
Corrected Compressive Strength, psi	2,630	2,610	3,070
Fracture Pattern	Type 4	Type 1	Type 1

Schematic of Typical Fracture Patterns

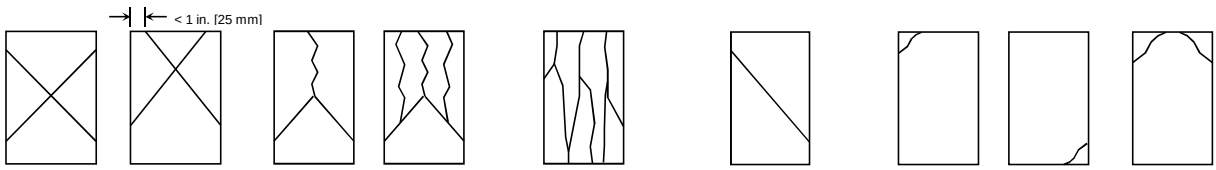

Type 1
Reasonable well-formed cones on both ends, less than 1 in. [25 mm] of cracking through caps

Type 2
Well-formed cone on one end, vertical cracks running through caps, no well-defined cone on other end

Type 3
Columnar vertical cracking through both ends, no well-formed cones

Type 4
Diagonal fracture with no cracking through ends; tap with hammer to distinguish from Type I

Type 5
Side fractures at top or bottom (occur commonly with unbonded caps)

Type 6
Similar to Type 5 but end of cylinder is pointed

Notes:
1. This report may not be reproduced except in its entirety.

Client:	**City of Austin**	CTLGroup Project No.:	**231701**
Project Name:	**Austin Fire Department Stations 3 & 22**	CTLGroup Project Mgr.:	**Bradley East**
	Structural Capacity Assessment	Analyst:	**WD, CA**
Contact:	**Karim Helmi**	Approved by:	**Bradley East**
Submitter:	**Bradley East**	Date Analyzed:	**June 27, 2017**
Date Received:	**June 21, 2017**	Date Reported:	**June 28, 2017**

ASTM C42 Standard Test Method for Obtaining and Testing Drilled Cores and Sawed Beams of Concrete
Section 7: Cores for Compressive Strength

Specimen Identification

CTLGroup Identification	4475707	4475708	4475709
Client Identification	No. 3-C12	No. 3-C13	No. 3-C14
Date Core Obtained from the Field	Not Stated	Not Stated	Not Stated
Date end preparation was completed and core was placed in sealed bag	6/22/17	6/22/17	6/22/17
Date Core was Tested	6/27/17	6/27/17	6/27/17

Concrete Description

Nominal Maximum Aggregate Size, in.	3/4	3/4	3/4
Concrete Age at Test	~65 years	~65 years	~65 years
Moisture Condition at Test	Per Standard	Per Standard	Per Standard
Length of Core, As Drilled, in.	6	5 1/4	5 3/4
Orientation of Core Axis in Structure	Vertical	Vertical	Vertical
Cylinder End Preparation	Capped	Capped	Capped

Concrete Dimensions

Diameter 1, in.	2.74	2.74	2.74
Diameter 2, in.	2.74	2.74	2.75
Average Diameter, in.	2.74	2.74	2.75
Cross-Sectional Area, in^2	5.90	5.90	5.94
Length Trimmed, in.	5.2	5.2	5.1
Length Capped, in.	5.4	5.4	5.3
Density, pcf	140	142	143

Compressive Strength and Fracture Pattern

Maximum Load, lb	18,485	20,585	17,159
Uncorrected compressive Strength, psi	3,130	3,490	2,890
Ratio of Capped Length to Diameter	1.96	1.95	1.94
Corrected Compressive Strength, psi	3,130	3,490	2,890
Fracture Pattern	Type 4	Type 1	Type 1

Schematic of Typical Fracture Patterns

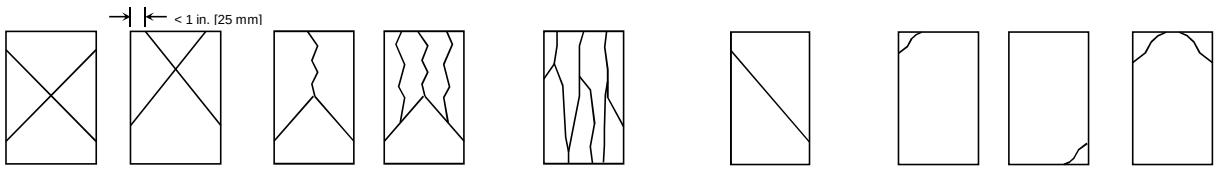

Type 1
Reasonable well-formed cones on both ends, less than 1 in. [25 mm] of cracking through caps

Type 2
Well-formed cone on one end, vertical cracks running through caps, no well-defined cone on other end

Type 3
Columnar vertical cracking through both ends, no well-formed cones

Type 4
Diagonal fracture with no cracking through ends; tap with hammer to distinguish from Type I

Type 5
Side fractures at top or bottom (occur commonly with unbonded caps)

Type 6
Similar to Type 5 but end of cylinder is pointed

Notes:
1. This report may not be reproduced except in its entirety.

Client:	**City of Austin**	CTLGroup Project No.:	**231701**
Project Name:	**Austin Fire Department Stations 3 & 22**	CTLGroup Project Mgr.:	**Bradley East**
	Structural Capacity Assessment	Analyst:	**WD, CA**
Contact:	**Karim Helmi**	Approved by:	**Bradley East**
Submitter:	**Bradley East**	Date Analyzed:	**June 27, 2017**
Date Received:	**June 21, 2017**	Date Reported:	**June 28, 2017**

ASTM C42 Standard Test Method for Obtaining and Testing Drilled Cores and Sawed Beams of Concrete
Section 7: Cores for Compressive Strength

Specimen Identification

CTLGroup Identification	4475711	4475712	4475714
Client Identification	No. 22-C10	No. 22-C11	No. 22-C13
Date Core Obtained from the Field	Not Stated	Not Stated	Not Stated
Date end preparation was completed and core was placed in sealed bag	6/22/17	6/22/17	6/22/17
Date Core was Tested	6/27/17	6/27/17	6/27/17

Concrete Description

Nominal Maximum Aggregate Size, in.	3/8	3/4	3/4
Concrete Age at Test	~40 yr	~40 yr	~40 yr
Moisture Condition at Test	Per Standard	Per Standard	Per Standard
Length of Core, As Drilled, in.	3	5	5 1/4
Orientation of Core Axis in Structure	Vertical	Vertical	Vertical
Cylinder End Preparation	Capped	Capped	Capped

Concrete Dimensions

Diameter 1, in.	1.27	1.27	2.75
Diameter 2, in.	1.27	1.27	2.75
Average Diameter, in.	1.27	1.27	2.75
Cross-Sectional Area, in^2	1.27	1.27	5.94
Length Trimmed, in.	1.2	1.4	5.1
Length Capped, in.	1.4	1.6	5.2
Density, pcf	113	104	144

Compressive Strength and Fracture Pattern

Maximum Load, lb	9,821	6,835	37,256
Uncorrected compressive Strength, psi	7,730	5,380	6,270
Ratio of Capped Length to Diameter	1.07	1.24	2.10
Corrected Compressive Strength, psi	6,880	5,000	6,270
Fracture Pattern	Type 1	Type 1	Type 1

Schematic of Typical Fracture Patterns

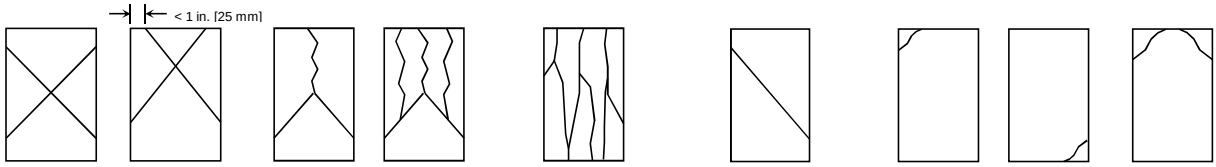

Type 1
Reasonable well-formed cones on both ends, less than 1 in. [25 mm] of cracking through caps

Type 2
Well-formed cone on one end, vertical cracks running through caps, no well-defined cone on other end

Type 3
Columnar vertical cracking through both ends, no well-formed cones

Type 4
Diagonal fracture with no cracking through ends; tap with hammer to distinguish from Type I

Type 5
Side fractures at top or bottom (occur commonly with unbonded caps)

Type 6
Similar to Type 5 but end of cylinder is pointed

Notes:
1. The ratio of capped length to diameter is larger than 2.1, the calculated compressive strength is reported for information only.
2. This report may not be reproduced except in its entirety.

Client:	**City of Austin**	CTLGroup Project No.:	**231701**
Project Name:	**Austin Fire Department Stations 3 & 22**	CTLGroup Project Mgr.:	**Bradley East**
	Structural Capacity Assessment	Analyst:	**WD, CA**
Contact:	**Karim Helmi**	Approved by:	**Bradley East**
Submitter:	**Bradley East**	Date Analyzed:	**June 27, 2017**
Date Received:	**June 21, 2017**	Date Reported:	**June 28, 2017**

ASTM C42 Standard Test Method for Obtaining and Testing Drilled Cores and Sawed Beams of Concrete
Section 7: Cores for Compressive Strength

Specimen Identification

CTLGroup Identification	4475715	4475716	4475717
Client Identification	No. 22-C14	No. 22-C15	No. 22-C16
Date Core Obtained from the Field	Not Stated	Not Stated	Not Stated
Date end preparation was completed and core was placed in sealed bag	6/22/17	6/22/17	6/22/17
Date Core was Tested	6/27/17	6/27/17	6/27/17

Concrete Description

Nominal Maximum Aggregate Size, in.	3/4	3/4	3/4
Concrete Age at Test	~40 yr	~40 yr	~40 yr
Moisture Condition at Test	Per Standard	Per Standard	Per Standard
Length of Core, As Drilled, in.	5 1/2	5 3/4	5 1/2
Orientation of Core Axis in Structure	Vertical	Vertical	Vertical
Cylinder End Preparation	Capped	Capped	Capped

Concrete Dimensions

Diameter 1, in.	2.75	2.76	2.75
Diameter 2, in.	2.75	2.75	2.75
Average Diameter, in.	2.75	2.76	2.75
Cross-Sectional Area, in^2	5.94	5.98	5.94
Length Trimmed, in.	5.2	5.1	5.0
Length Capped, in.	5.3	5.3	5.1
Density, pcf	144	144	142

Compressive Strength and Fracture Pattern

Maximum Load, lb	35,231	35,176	30,873
Uncorrected compressive Strength, psi	5,930	5,880	5,200
Ratio of Capped Length to Diameter	1.93	1.91	2.10
Corrected Compressive Strength, psi	5,930	5,880	5,200
Fracture Pattern	Type 4	Type 2	Type 1

Schematic of Typical Fracture Patterns

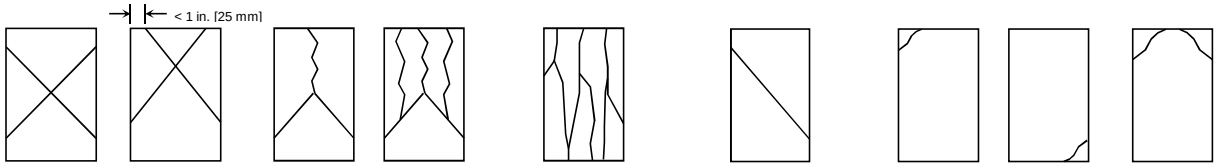

Type 1
Reasonable well-formed cones on both ends, less than 1 in. [25 mm] of cracking through caps

Type 2
Well-formed cone on one end, vertical cracks running through caps, no well-defined cone on other end

Type 3
Columnar vertical cracking through both ends, no well-formed cones

Type 4
Diagonal fracture with no cracking through ends; tap with hammer to distinguish from Type I

Type 5
Side fractures at top or bottom (occur commonly with unbonded caps)

Type 6
Similar to Type 5 but end of cylinder is pointed

Notes:
1. This report may not be reproduced except in its entirety.

Client:	**City of Austin**	CTLGroup Project No.:	**231701**
Project Name:	**Austin Fire Department Stations 3 & 22**	CTLGroup Project Mgr.:	**Bradley East**
	Structural Capacity Assessment	Analyst:	**WD, CA**
Contact:	**Karim Helmi**	Approved by:	**Bradley East**
Submitter:	**Bradley East**	Date Analyzed:	**June 27, 2017**
Date Received:	**June 21, 2017**	Date Reported:	**June 28, 2017**

ASTM C42 Standard Test Method for Obtaining and Testing Drilled Cores and Sawed Beams of Concrete
Section 7: Cores for Compressive Strength

Specimen Identification

CTLGroup Identification	4475718	4475719
Client Identification	No. 22-C17	No. 22-C18
Date Core Obtained from the Field	Not Stated	Not Stated
Date end preparation was completed and core was placed in sealed bag	6/22/17	6/22/17
Date Core was Tested	6/27/17	6/27/17

Concrete Description

Nominal Maximum Aggregate Size, in.	3/4	3/4
Concrete Age at Test	~40 yr	~40 yr
Moisture Condition at Test	Per Standard	Per Standard
Length of Core, As Drilled, in.	6	6
Orientation of Core Axis in Structure	Vertical	Vertical
Cylinder End Preparation	Capped	Capped

Concrete Dimensions

Diameter 1, in.	2.76	2.75
Diameter 2, in.	2.76	2.76
Average Diameter, in.	2.76	2.76
Cross-Sectional Area, in^2	5.98	5.98
Length Trimmed, in.	4.9	5.2
Length Capped, in.	5.0	5.3
Density, pcf	140	140

Compressive Strength and Fracture Pattern

Maximum Load, lb	25,672	27,724
Uncorrected compressive Strength, psi	4,290	4,640
Ratio of Capped Length to Diameter	1.83	1.92
Corrected Compressive Strength, psi	4,290	4,640
Fracture Pattern	Type 4	Type 2

Schematic of Typical Fracture Patterns

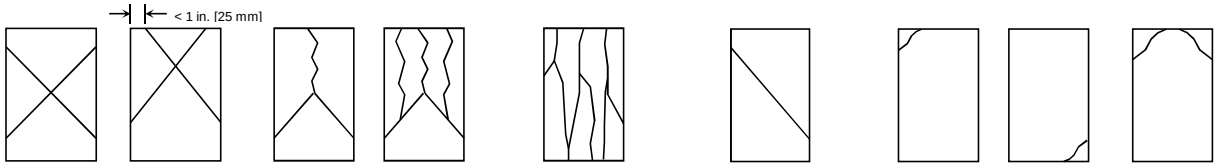

Type 1
Reasonable well-formed cones on both ends, less than 1 in. [25 mm] of cracking through caps

Type 2
Well-formed cone on one end, vertical cracks running through caps, no well-defined cone on other end

Type 3
Columnar vertical cracking through both ends, no well-formed cones

Type 4
Diagonal fracture with no cracking through ends; tap with hammer to distinguish from Type I

Type 5
Side fractures at top or bottom (occur commonly with unbonded caps)

Type 6
Similar to Type 5 but end of cylinder is pointed

Notes:
1. This report may not be reproduced except in its entirety.

Copy No. 1

Report for
City of Austin
105 W. Riverside Drive, Austin, Texas 78704

CTLGroup Project No. 231701

Paste Carbonation Determination of Two Concrete Cores from the City of Austin Fire Department Station 3 Structural Capacity Assessment, Austin, Texas

August 9, 2017

Submitted by:
Meredith Strow
Jean L. Randolph

COA #F-3849

5400 Old Orchard Road
Skokie, Illinois 60077-1030
(847) 965-7500

Austin, TX • Bradenton, FL • Chicago, IL • Horsham, PA
Naperville, IL • Washington, DC • Doha, Qatar

www.CTLGroup.com

CTLGroup is a registered d/b/a of Construction Technology Laboratories, Inc.

REPORT OF PASTE CARBONATION DETERMINATION

Date: August 9, 2017

CTLGroup Project No.: 231701

Paste Carbonation Determination of Two Concrete Cores from the City of Austin Fire Department Station 3 Structural Capacity Assessment, Austin, Texas

Two concrete cores, identified as FS #3 C15 and FS #3 C16 (Figs. 1 and 2), were received on August 1, 2017, by the CTLGroup Petrographic Laboratory from Mr. Bradley East, CTLGroup Engineer, on behalf of the City of Austin, Texas. Table 1 identifies and briefly describes the as-received cores.

TABLE 1 IDENTIFICATION AND BRIEF DESCRIPTION OF THE CORE SAMPLES

Core Identification	Brief Description	As-Received Photographs
FS #3 C15	Full-depth 1.7-in.-dia. core consisting of one concrete with a very thin layer of clear topping material on the top surface. A couple randomly-oriented hairline cracks are present on the top surface.	Fig. 1
FS #3 C16	Full-depth 1.7-in.-dia. core consisting of one concrete with a very thin layer of clear topping material on the top surface.	Fig. 2

Determination of the depth of paste carbonation of the two cores was requested, specifically from the core bottom surface up into the concrete. This report presents the details and results of the analysis.

FINDINGS AND CONCLUSIONS

Core FS #3 C15 does not contain rebar. Paste carbonation is present in both the top and bottom portions of the concrete core (Fig. 3a). From the top surface, the paste is carbonated to

depths of 22 to 29 mm (0.9 to 1.1 in.). From the bottom surface, the paste is carbonated to depths of 10 to 27 mm (0.4 to 1.1 in.) into the concrete.

Core FS #3 C16 does not contain rebar. Paste carbonation is observed only in the bottom portion of the concrete core (Fig. 3b). From the bottom surface, the paste is carbonated to depths of 29 to 44 mm (1.1 to 1.7 in.) into the concrete.

All information obtained in the examination is presented in the laboratory data forms at the end of this report.

METHODS OF TEST

Depth and pattern of paste carbonation was determined by application of a pH indicator solution (phenolphthalein) to a freshly saw-cut, longitudinal concrete surface of each core. The solution imparts a deep magenta stain to high pH, non-carbonated paste. Carbonated paste does not change color.

Meredith Strow
Petrography Group

Jean L. Randolph
Senior Petrographer and Group Manager
Petrography Group

MLS/JLR/

Notes: 1. Results refer specifically to the samples submitted.
2. This report may not be reproduced except in its entirety.

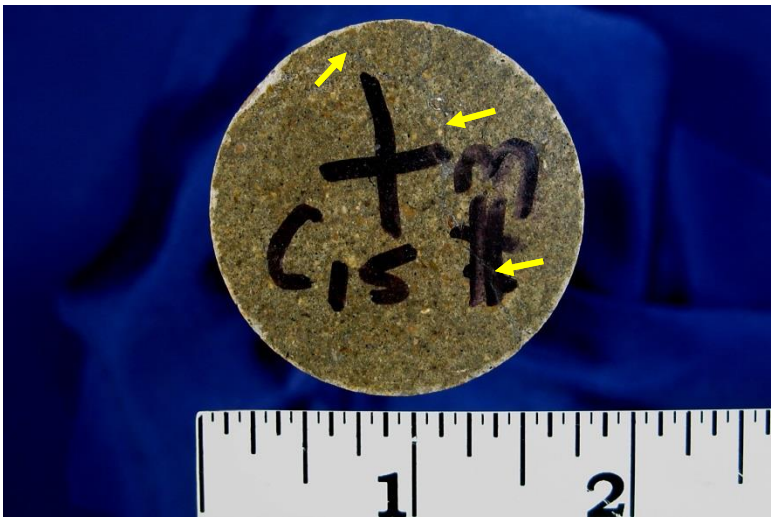

1a. Core top surface. Surface is flat, even concrete surface with a very thin layer of clear topping material. Yellow arrows point to hairline cracks.

1b. Side view of core.

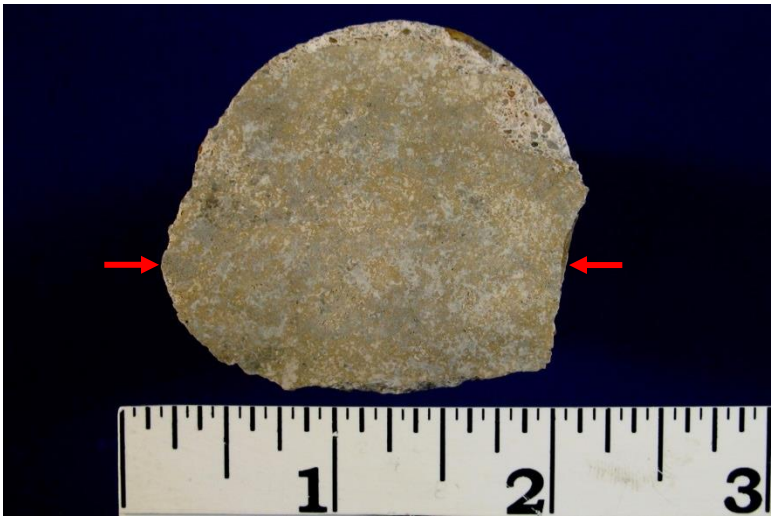

1c. Core bottom surface. The surface is a formed wavy shape. Red arrows point to corrugated ridge.

Fig. 1 Core FS #3 C15, as received in the Petrographic Laboratory for testing.

2a. Core top surface. Surface is flat, even concrete surface with a very thin layer of clear topping material.

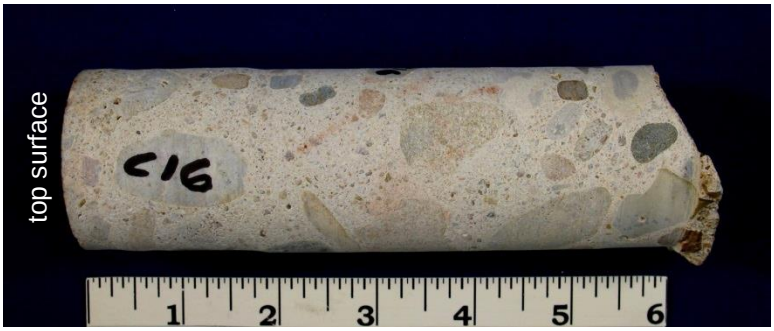

2b. Side view of core.

2c. Core bottom surface. The surface is a formed wavy shape. Red arrows point to corrugated ridge.

Fig. 2 Core FS #3 C16, as received in the Petrographic Laboratory for testing.

3a. Core FS #3 C15

3b. Core FS #3 C16

Fig. 3 Saw-cut, cross-sectional concrete surfaces of Cores FS #3 C15 and FS #3 C16. Phenolphthalein (a pH indicator solution) was applied to the surface to determine paste carbonation levels. Non-carbonated paste is deep magenta; carbonated paste did not change color. Yellow bars and text designate depth into the concrete from the nearest surface. Scale is in inches.

LABORATORY DATA FORM

STRUCTURE: City of Austin Fire Station #3 *DATE RECEIVED*: August 1, 2017

LOCATION: Austin, Texas *EXAMINED BY*: Meredith Strow

SAMPLE

Client Identification: FS #3 C15.

CTLGroup Identification: 4506701.

Dimensions: Core diameter = 44 mm (1.7 in.), core length = 137 to 152 mm (5.4 to 6 in.); full structure thickness.

Top Surface: Flat, even, concrete surface with very thin layer of clear topping material. A couple long, randomly-oriented, hairline cracks extend across the full diameter of the core.

Bottom Surface: Wavy, fairly smooth, formed concrete surface with one corrugated ridge.

Cracks, Joints, Large Voids: No additional cracks present; no joints or large voids present.

Reinforcement: None present.

PASTE

Depth of Carbonation: 22 to 29 mm (0.9 to 1.1 in.) from top surface; 10 to 27 mm (0.4 to 1.1 in.) from bottom surface.

LABORATORY DATA FORM

STRUCTURE: City of Austin Fire Station #3 *DATE RECEIVED*: August 1, 2017

LOCATION: Austin, Texas *EXAMINED BY*: Meredith Strow

SAMPLE

Client Identification: FS #3 C16.

CTLGroup Identification: 4506702.

Dimensions: Core diameter = 44 mm (1.7 in.), core length = 136 to 150 mm (5.4 to 5.9 in.); full structure thickness.

Top Surface: Flat, even, concrete surface with very thin layer of clear topping material.

Bottom Surface: Wavy, fairly smooth, formed concrete surface with one corrugated ridge.

Cracks, Joints, Large Voids: None present.

Reinforcement: None present.

PASTE

Depth of Carbonation: Negligible from top surface; 29 to 44 mm (1.1 to 1.7 in.) from bottom surface.

Copy No. 1

Report for
City of Austin
105 W. Riverside Drive, Austin, Texas 78704

CTLGroup Project No. 231701

Paste Carbonation Determination on Core Samples from Austin Fire Department Stations 3 and 22 Structural Capacity Assessment, Austin, Texas

June 28, 2017

Submitted by:
Meredith Strow
Jean L. Randolph

COA #F-3849

5400 Old Orchard Road
Skokie, Illinois 60077-1030
(847) 965-7500

Austin, TX • Bradenton, FL • Chicago, IL • Horsham, PA
Naperville, IL • Washington, DC • Doha, Qatar

www.CTLGroup.com

CTLGroup is a registered d/b/a of Construction Technology Laboratories, Inc.

REPORT OF PASTE CARBONATION DETERMINATION

Date: June 28, 2017

CTLGroup Project No.: 231701

Paste Carbonation Determination on Core Samples from Austin Fire Department Stations 3 and 22 Structural Capacity Assessment, Austin, Texas

Two concrete core samples were received June 23, 2017, in the CTLGroup Petrographic Laboratory from Mr. Bradley East, CTLGroup Engineer, on behalf of the City of Austin, Texas. Table 1 identifies and briefly describes the as-received specimens.

TABLE 1 IDENTIFICATION AND BRIEF DESCRIPTION OF THE CORE SAMPLES

Core Identification	Brief Description	As-Received Photographs
No. 3-Big Core	Full-depth 5.6-in.-dia. core, consisting of a terrazzo-type topping, then a thick mortar-like layer, then the substrate concrete.	Fig. 1
No. 3-C14	Specimen is the bottom 0.9-in. portion of a longer, 2.7-in.-dia. core. The bottom portion was saw-cut from the overlying core.	Fig. 2

Determination of the depth of paste carbonation of the two core specimens was requested, from the core bottom surface up into the concrete. This report presents the details and results of the analysis.

FINDINGS AND CONCLUSIONS

Core 3-Big Core contains three rebar segments, which are located in the bottom portion of the concrete. The rebar segments have concrete cover ranging from 0.5 to 1 in. from the bottom surface.

Carbonation in Core No. 3-Big Core is minimal and does not reach any of the four rebar segments present within the concrete (Fig. 3). The rebar segments have concrete cover ranging from 0.5 to 1 in. from the bottom surface. Four small, local regions of carbonation extend from the bottom surface to depths of 0.3 to 0.5 in. into the concrete. The carbonated region which extends 0.5 in. into the concrete is relatively far away from the rebar segments. The closest rebar segment to this carbonated region has 1 in. of concrete cover; the rebar is not comprised.

Core No. 3-C14 is a 0.9-in.-thick offcut from a longer core. No rebar is present in this core sample.

Carbonation in No. 3-C14 is substantial. The majority of the paste is carbonated throughout the full depth of the core sample, with small amounts of noncarbonated paste along the bottom surface (Fig. 4). The non-carbonated paste appears to extend upwardly into the concrete in a relatively random nature. Due to the amount of carbonation, it is likely that the carbonated paste is present beyond the 0.9 in. portion of the core evaluated in this examination.

All information obtained in the examination is presented in the laboratory data forms at the end of this report.

METHODS OF TEST

Depth and pattern of paste carbonation was determined by application of a pH indicator solution (phenolphthalein) to a freshly saw-cut, longitudinal concrete surface of each core. The solution imparts a deep magenta stain to high pH, non-carbonated paste. Carbonated paste does not change color.

Meredith Strow
Petrography Group

Jean L. Randolph
Senior Petrographer and Group Manager
Petrography Group

MLS/JLR/

Notes: 1. Results refer specifically to the samples submitted.
2. This report may not be reproduced except in its entirety.

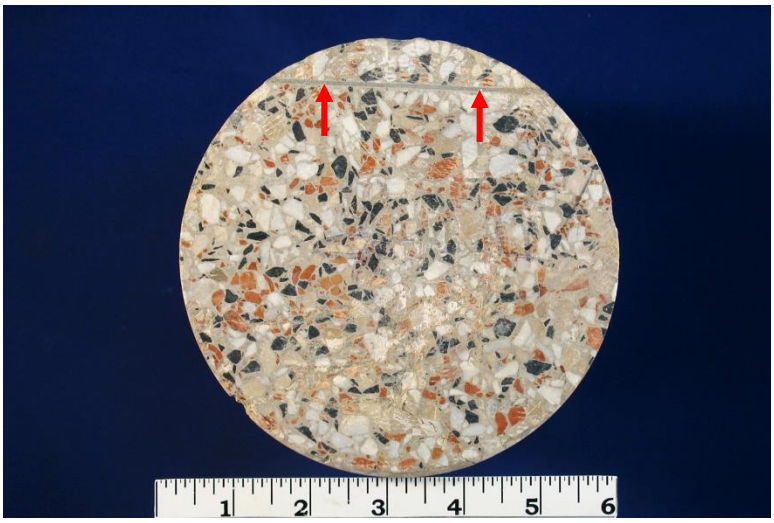

1a. Top surface. Surface is a terrazzo-like concrete material. Red arrows point to a thin reinforcement plate.

1b. Side view of core. Core consists of a terrazzo-like concrete topping, with an underlying mortar-like layer, then the underlying substrate concrete. Three rebar segments (red arrows) are present in the bottom portion of the concrete. The concrete bottom surface is a formed, wavy corrugated shape.

1c. Core bottom surface. The surface is a formed wavy shape. Green arrows point to corrugated ridges.

Fig. 1 Core No. 3-Big Core, as received in the Petrographic Laboratory for testing.

2a. Top of sample, which is a saw-cut surface.

2b. Side view of sample. The concrete bottom surface is a formed, wavy corrugated shape. Green arrow points to a corrugated ridge.

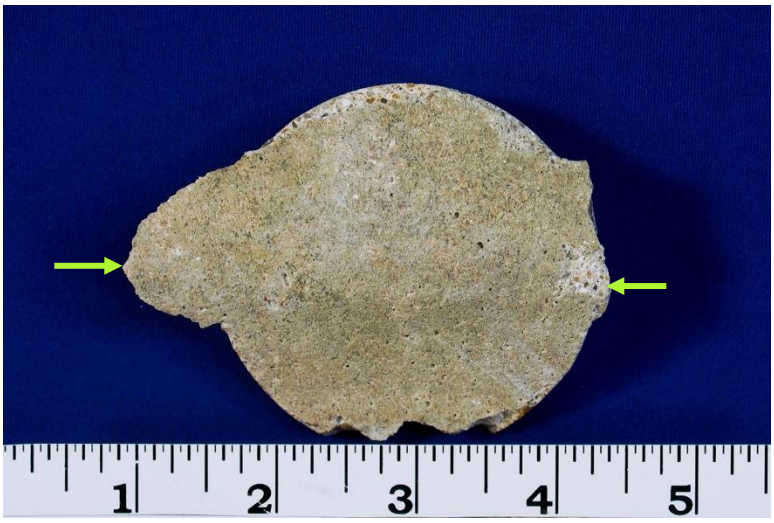

2c. Bottom of sample. Green arrows point to a corrugated ridge.

Fig. 2 Core No. 3-C14, as received in the Petrographic Laboratory for testing.

Fig. 3 Saw-cut, cross-sectional concrete surface of Core No. 3-Big Core. Phenolphthalein (a pH indicator solution) was applied to the surface to aid in carbonation assessment. Non-carbonated paste is deep magenta; carbonated paste did not change color. Four local regions of carbonated paste are present along the bottom surface; yellow arrows point to these regions and yellow bars and text designate depth into the concrete from the nearest bottom surface. Scale is in inches.

Fig. 4 Saw-cut, cross-sectional concrete surface of Core No. 3-C14. Phenolphthalein (a pH indicator solution) was applied to the surface to aid in carbonation assessment. Non-carbonated paste is deep magenta; carbonated paste did not change color. The majority of the paste is carbonated throughout the full depth of the concrete sample. A small amount of non-carbonated paste is present along the bottom surface and mottled upwardly into the concrete. Scale is in inches.

LABORATORY DATA FORM

STRUCTURE: Austin Fire Department

DATE RECEIVED: June 23, 2017

LOCATION: Austin, Texas

EXAMINED BY: Meredith Strow

SAMPLE

Client Identification: No. 3-Big Core.

CTLGroup Identification: 4402614.

Dimensions: Core diameter = 142 mm (5.6 in.), core length = 205 to 219 mm (8.1 to 8.6 in.); full structure thickness.

Top Surface: Flat, even, saw-cut terrazzo-type material surface.

Bottom Surface: Wavy, fairly smooth, formed concrete surface with corrugated ridges.

Cracks, Joints, Large Voids: None present.

Reinforcement:

- Three rebar segments are present in the bottom portion of the concrete; all three are oriented parallel to the top surface. Information regarding each segment is summarized below:
    - One 11-mm-dia. (0.4-in.-dia.) segment.
        - Located at depth of 168 mm (6.6 in.) from core top surface, or 112 mm (4.4 in.) from concrete top surface.
        - Concrete cover of 26 mm (1 in.) from the nearest bottom surface.
    - One segment has a diameter of 12 mm (0.5 in.) and has
        - Located at depth of 178 mm (7 in.) from core top surface, or 122 mm (4.8 in.) from concrete top surface.
        - Concrete cover of 17 mm (0.7 in.) from the nearest bottom surface.
        - This rebar segment was cut through at an angle and appears elongated on the lapped surface image.
    - One 6-mm-dia. (0.2-in.-dia.) segment.
        - Located at depth of 191 mm (7.5 in.) from core top surface, or 131 mm (5.2 in.) from concrete top surface.
        - Concrete cover of 12 mm (0.5 in.) from nearest bottom surface.

PASTE

Depth of Carbonation: Four local regions of carbonated paste are observed in the near-bottom region of the concrete. These regions extend from the bottom surface to depths of 7 mm (0.3 in.), 12.5 mm (0.5 in.), 10.5 mm (0.4 in.), and 10 mm (0.4 in.). No carbonated paste reaches rebar segments.

LABORATORY DATA FORM

STRUCTURE: Austin Fire Department

DATE RECEIVED: June 23, 2017

LOCATION: Austin, Texas

EXAMINED BY: Meredith Strow

SAMPLE

Client Identification: No. 3-C14.

CTLGroup Identification: 4475709-01.

Dimensions: Core diameter = 69 mm (2.7 in.). Core length = 22 mm (0.9 in.); partial structure thickness.

Top Surface: Flat, even, saw-cut concrete surface.

Bottom Surface: Wavy, fairly smooth, formed concrete surface with a corrugated ridge.

Cracks, Joints, Large Voids: None present.

Reinforcement: None present.

PASTE

Depth of Carbonation: The majority of the paste is carbonated throughout the full depth of the concrete sample. A small amount of non-carbonated paste is present along the bottom surface and mottled upwardly into the concrete.

Copy No. 1

Report for
City of Austin
105 W. Riverside Drive, Austin, Texas 78704

CTLGroup Project No. 231701

Paste Carbonation Determination on Core FS#22-C12 from Austin Fire Department Stations 3 and 22 Structural Capacity Assessment, Austin, Texas

August 8, 2017

Submitted by:
Jaclyn Ferraro
Jean L. Randolph

COA #F-3849

5400 Old Orchard Road
Skokie, Illinois 60077-1030
(847) 965-7500

Austin, TX • Bradenton, FL • Chicago, IL • Horsham, PA
Naperville, IL • Washington, DC • Doha, Qatar

www.CTLGroup.com

CTLGroup is a registered d/b/a of Construction Technology Laboratories, Inc.

REPORT OF PASTE CARBONATION DETERMINATION

Date: August 8, 2017

CTLGroup Project No.: 231701

Paste Carbonation Determination on Core FS#22-C12 from Austin Fire Department Stations 3 and 22 Structural Capacity Assessment, Austin, Texas

One concrete core sample, identified as FS#22-C12, was received August 1, 2017, in the CTLGroup Petrographic Laboratory from Mr. Bradley East, CTLGroup Engineer, on behalf of the City of Austin, Texas. The core was received with saw-cut ends that are covered with a capping compound. Determination of paste carbonation in the concrete core was requested. This report presents the details and results of the analysis.

FINDINGS AND CONCLUSIONS

No paste carbonation is observed in the concrete of Core FS#22-C12 (Fig. 1). The sample contains one 4-mm-diameter (0.2-in.-dia.) wire mesh segment. All information obtained in the examination is presented in the laboratory data form at the end of this report.

METHODS OF TEST

Pattern of paste carbonation was determined by application of a pH indicator solution (phenolphthalein) to a freshly saw-cut, longitudinal concrete surface and fresh fractured surface of the core. The solution imparts a deep magenta stain to high pH, non-carbonated paste. Carbonated paste does not change color.

Jaclyn Ferraro
Petrography Group

Jean L. Randolph
Senior Petrographer and Group Manager
Petrography Group

JMF/JLR/

Notes: 1. Results refer specifically to the sample submitted.
2. This report may not be reproduced except in its entirety.

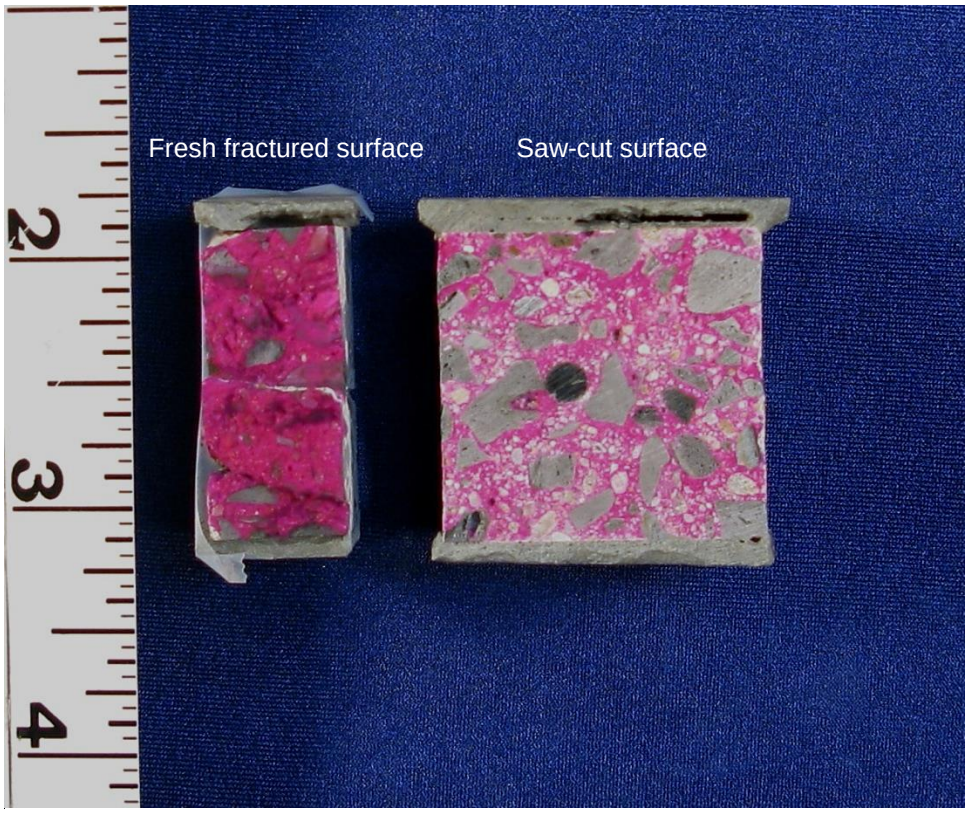

Fig. 1 Core FS#22-C12, after being saw-cut longitudinally in the Petrographic Laboratory. One resultant longitudinal saw-cut surface is shown on the right. The other longitudinal saw-cut surface was freshly fractured in the laboratory (left). Phenolphthalein (a pH indicator solution) was applied to these surfaces to determine localities of paste carbonation in the concrete. Non-carbonated paste is deep magenta; carbonated paste does not change color. In the core specimen, no carbonation is observed. Scale is in inches.

LABORATORY DATA FORM

STRUCTURE: Austin Fire Department

DATE RECEIVED: August 1, 2017

LOCATION: Austin, Texas

EXAMINED BY: Jaclyn Ferraro

SAMPLE

Client Identification: FS#22-C12.

CTLGroup Identification: 4475713.

Dimensions: Core diameter = 32 mm (1.3 in.). Core length without capping compound = 31 mm (1.2 in.); partial structure thickness.

Top and Bottom Surfaces: Saw-cut concrete surface covered by a capping compound.

Cracks, Joints, Large Voids: None present.

Reinforcement: One 4-mm-diameter (0.2-in.-dia.) wire mesh segment is present within the core.

PASTE

Depth of Carbonation: None observed.

Appendix C

Structural Analyses – Fire Station No. 3

STRUCTURAL ANALYSIS AND DESIGN REVIEW OF

CITY OF AUSTIN

FIRE STATION NO. 3

PHASE 2

This appendix describes the analysis and design review of Fire Station No. 3 floor system.

DESCRIPTION OF THE FLOOR SYSTEM

Fire Station No. 3 floor system is described in the main body of the report.

CODES AND STANDARDS

The design review of Fire Station No. 3 floor system is based on ACI 318-14.

MATERIAL PROPERTIES

An equivalent concrete compressive strength of 2639 psi is obtained from the statistical analysis of the concrete core test data. An elastic modulus of 2928 ksi is calculated per ACI 318-14 Equation 19.2.2.1.b. A weight density of 141 pcf is obtained from the concrete core test data and used in the structural analysis.

Mild deformed reinforcing steel is assumed to have a minimum yield strength equal to 40,000 psi based on the age of the structure. The structure reportedly was constructed in the 1950's.

The material properties used in the analyses are summarized in Table 1.

MEMBER CAPACITIES

The flexural capacity of slab and beams are calculated using the spColumn computer program as shown in Figures 1 to 7.

The shear capacity of slab and beams are calculated and summarized in Table 2.

LOADS

Gravity dead load includes the self-weight of the floor system. The self-weight of the floor system is calculated using a weight density of 141 pcf.

Gravity live load includes a ladder truck in one bay and an engine truck in the other bay. The ladder truck weight and wheel footprint calculations are shown in Figure 8. The engine truck weight and wheel footprint calculations are shown in Figure 9.

In structural analysis, the length of the tire footprint (parallel to traffic direction) is assumed 10 inches and the width of the footprint (normal to traffic direction) is assumed 20 inches similar to those of a standard truck per AASHTO LRFD 2010.

No other live loads besides the truck loads are considered in the structural analyses.

FLOOR SLAB ANALYSIS

A three-span strip of the floor slab is analyzed under dead and live loads. The analysis model is shown in Figures 10 and 11. The effective width of one-way slab is calculated per AASHTO LRFD 2010 as shown in Table 3. Based on these results, an effective width of 99 in. is assumed for a single axle and an effective width of 151 in. is assumed for a tandem axle with 52 in. spacing between the parallel axles.

An analysis of the slab strip is conducted under a 27-kip axle load in the left bay and a 27-kip axle load in the right bay as shown in Figures 12 and 13. In this analysis, possible truck/axle positions are considered to be anywhere between a far left position and a far right position within the bay.

The shear force and bending moment envelopes are shown in Figures 14 and 15. The maximum shear force, positive bending moment, and negative bending moment from these envelope diagrams constitute the maximum demand (D) on the slab.

FLOOR SLAB DESIGN REVIEW

The slab strip capacity (C) is obtained by multiplying the unit-wide strip capacities and the strip width.

The slab shear force and bending moment demand capacity ratios (DCR) are summarized in Table 4.

The slab punching shear demand capacity ratio (DCR) under a wheel load is calculated in Table 5.

FLOOR SLAB REACTIONS

Figure 16 shows the slab reactions as the axle is positioned from one side of the left bay to the other side of the left bay. Figure 17 shows the slab reactions as the axle is positioned from one side of the right bay to the other side of the right bay. These reactions are used to calculate the percentage of the axle load that is carried by each support as shown in Table 6.

WIDE BEAM ANALYSIS

A four-span continuous beam model of the wide beam is analyzed under dead and live loads. The analysis model is shown in Figures 18 and 19.

Moving load analyses of the wide beam are conducted under a ladder truck and an engine truck as shown in Figures 20 to 23. The results of these analyses are scaled by the percentages shown in Table 5 and combined.

The shear force and bending moment envelopes are shown in Figures 24 and 25. The maximum shear force, positive bending moment, and negative moment from these envelope diagrams constitute the maximum demand (D) on the wide beam.

WIDE BEAM DESIGN REVIEW

The wide beam shear force and bending moment demand capacity ratios (DCR) are summarized in Table 7.

NARROW BEAM ANALYSIS

A four-span continuous beam model of the wide beam is analyzed under dead and live loads. The analysis model is shown in Figures 26 and 27.

Moving load analyses of the wide beam are conducted under a ladder truck and an engine truck similar to those shown in Figures 20 to 23. The results of these analyses are scaled by the percentages shown in Table 5 and combined.

The shear force and bending moment envelopes are shown in Figures 28 and 29. The maximum shear force, positive bending moment, and negative moment from these envelope diagrams constitute the maximum demand (D) on the wide beam.

NARROW BEAM DESIGN REVIEW

The wide beam shear force and bending moment demand capacity ratios (DCR) are summarized in Table 8.

RESULTS SUMMARY

The slab, wide beam, and narrow beam shear force and bending moment demand capacity ratios (DCR) are summarized in Table 9.

ANALYSIS NOTES

In the current analyses, the ends of the slab strip and the ends of beams are assumed fixed against rotation. An alternative pinned assumption will also be considered in the final retrofit design.

In the current analyses, the shear demand is evaluated at the face of the supports. A small reduction in the shear demand will be considered in the final retrofit design by evaluating shear at a distance equal to effective depth from the face of the support.

In the current analyses, two different types of truck in the left and right bays of the fire station are considered. Per information provided by client, the case of two heavy ladder trucks on adjacent bays need not be considered.

Table 1: Material properties

Concrete compressive strength	f'_c	psi	2639
Concrete modulus of elasticity	E_c	ksi	2928
Concrete Poisson's ratio	n	---	0.2
Concrete weight density	g	pcf	141
Concrete modulus of rupture	f_r	psi	385
Concrete direct tensile strength	f_t	psi	205
Reinforcementyield stress	f_y	ksi	40

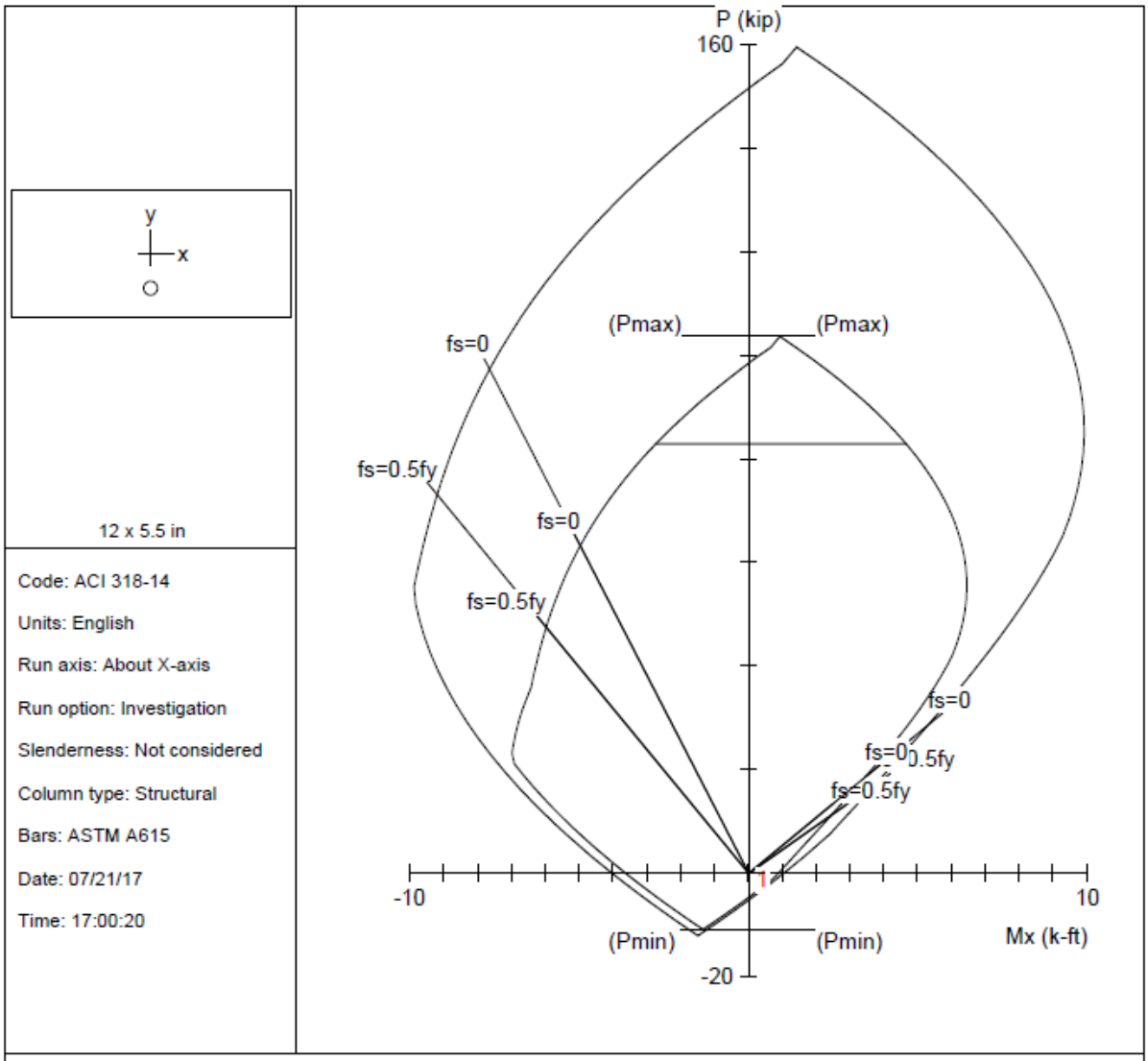

STRUCTUREPOINT - spColumn v5.11 (TM). Licensed to: CTL Group. License ID: 66496-1056230-4-20F7D-2BEED

File: D:\2017\231701 City of Austin Fire Station PHASE-2\FS-3\Capacity spColumn\Slab-Transverse-Midspan.col

Project: FS-3

Column: Slab Midspan		Engineer: HRL	
f'c = 2.639 ksi	fy = 40 ksi	Ag = 66 in^2	1 #5 bars
Ec = 2928 ksi	Es = 29000 ksi	As = 0.30 in^2	rho = 0.45%
fc = 2.24315 ksi	e_yt = 0.00137931 in/in	Xo = 0.00 in	Ix = 166.375 in^4
e_u = 0.003 in/in		Yo = 0.00 in	Iy = 792 in^4
Beta1 = 0.85		Min clear spacing = 1.19 in	Clear cover = 0.94 in
Confinement: Tied			
phi(a) = 0.8, phi(b) = 0.9, phi(c) = 0.65			

Figure 1: Flexural capacity of 1-ft wide slab strip in transverse direction at midspan

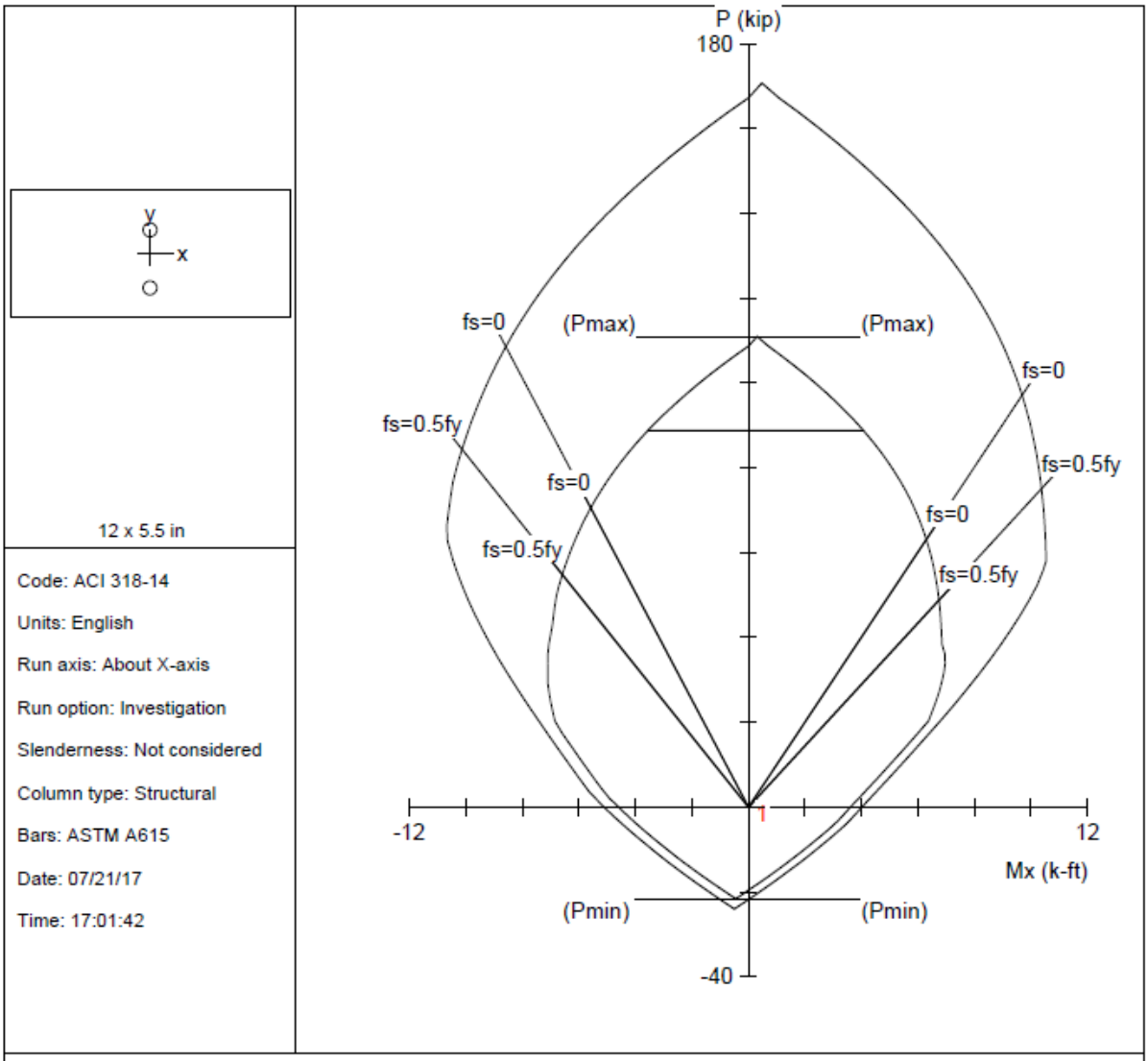

STRUCTUREPOINT - spColumn v5.11 (TM). Licensed to: CTL Group. License ID: 66496-1056230-4-20F7D-2BEED

File: D:\2017\231701 City of Austin Fire Station PHASE-2\FS-3\Capacity spColumn\Slab-Transverse-Support.col

Project: FS #3

Column: Slab Support		Engineer: HRL	
f'c = 2.639 ksi	fy = 40 ksi	Ag = 66 in^2	2 #5 bars
Ec = 2928 ksi	Es = 29000 ksi	As = 0.60 in^2	rho = 0.91%
fc = 2.24315 ksi	e_yt = 0.00137931 in/in	Xo = 0.00 in	Ix = 166.375 in^4
e_u = 0.003 in/in		Yo = 0.00 in	Iy = 792 in^4
Beta1 = 0.85		Min clear spacing = 1.88 in	Clear cover = 0.94 in
Confinement: Tied			
phi(a) = 0.8, phi(b) = 0.9, phi(c) = 0.65			

Figure 2: Flexural capacity of 1-ft wide slab strip in transverse direction at support

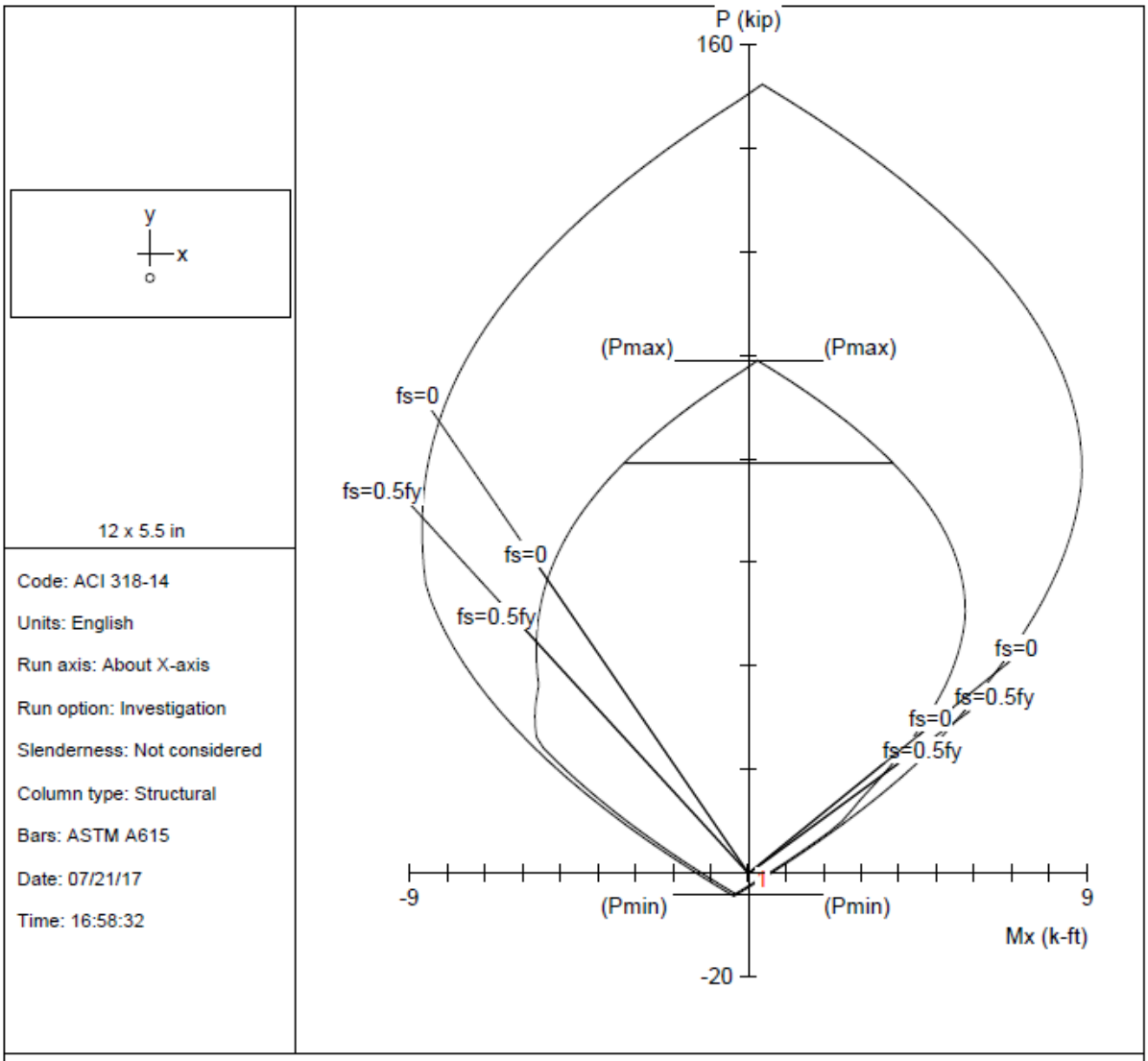

STRUCTUREPOINT - spColumn v5.11 (TM). Licensed to: CTL Group. License ID: 66496-1056230-4-20F7D-2BEED

File: D:\2017\231701 City of Austin Fire Station PHASE-2\FS-3\Capacity spColumn\Slab-Longitudinal.col

Project: FS #3

Column: Slab Longitu		Engineer: HRL	
f'c = 2.639 ksi	fy = 40 ksi	Ag = 66 in^2	1 #3 bars
Ec = 2928 ksi	Es = 29000 ksi	As = 0.11 in^2	rho = 0.17%
fc = 2.24315 ksi	e_yt = 0.00137931 in/in	Xo = 0.00 in	Ix = 166.375 in^4
e_u = 0.003 in/in		Yo = 0.00 in	Iy = 792 in^4
Beta1 = 0.85		Min clear spacing = 1.25 in	Clear cover = 1.50 in
Confinement: Tied			
phi(a) = 0.8, phi(b) = 0.9, phi(c) = 0.65			

Figure 3: Flexural capacity of 1-ft wide slab strip in longitudinal direction

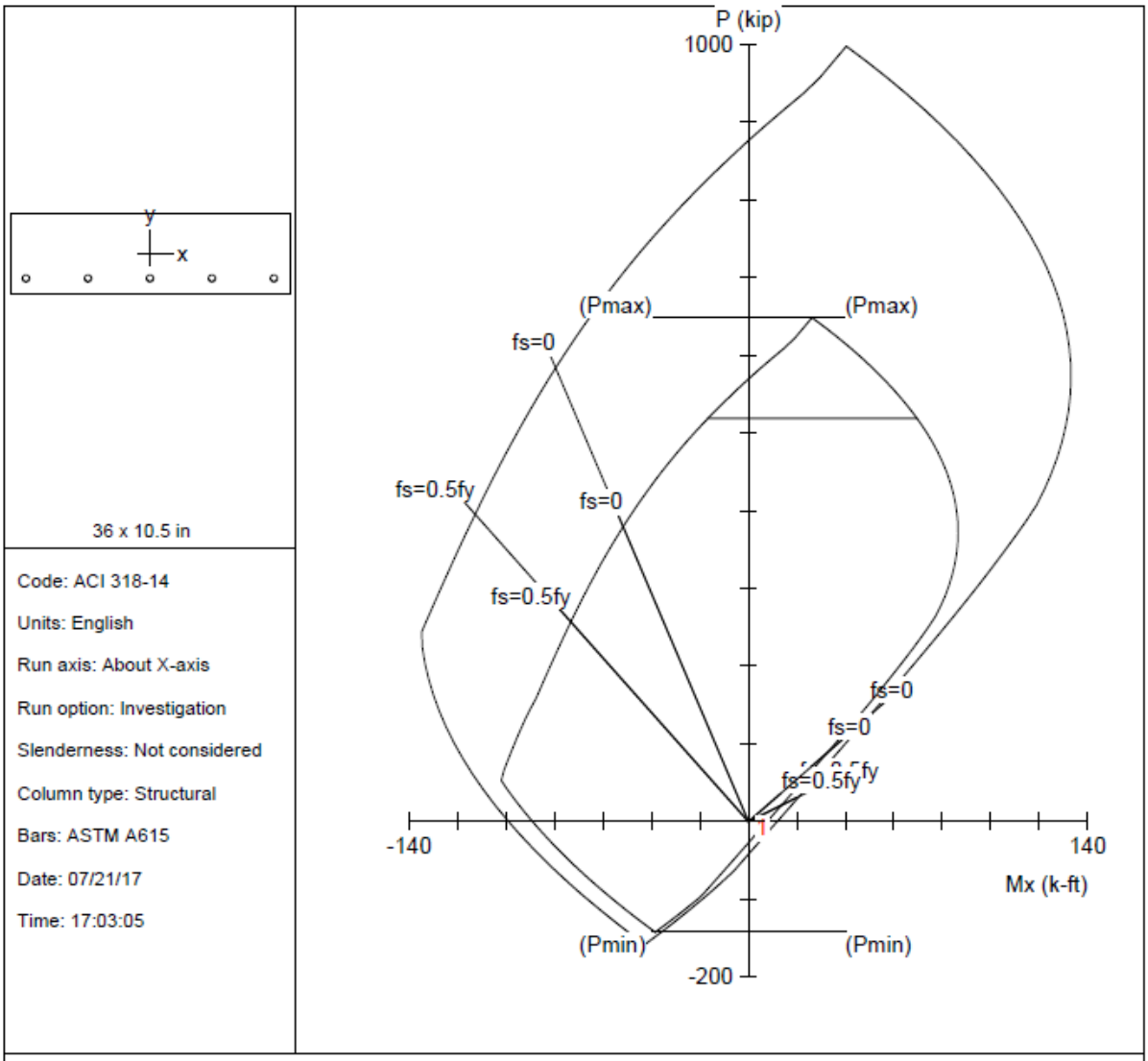

STRUCTUREPOINT - spColumn v5.11 (TM). Licensed to: CTL Group. License ID: 66496-1056230-4-20F7D-2BEED

File: D:\2017\231701 City of Austin Fire Station PHASE-2\FS-3\Capacity spColumn\Wide-Beam-Midspan.col

Project: FS #3

Column: 3-ft Midspan		Engineer: HRL	
f'c = 2.639 ksi	fy = 40 ksi	Ag = 378 in^2	5 #8 bars
Ec = 2928 ksi	Es = 29000 ksi	As = 3.95 in^2	rho = 1.04%
fc = 2.24315 ksi	e_yt = 0.00137931 in/in	Xo = 0.00 in	Ix = 3472.88 in^4
e_u = 0.003 in/in		Yo = 0.00 in	Iy = 40824 in^4
Beta1 = 0.85		Min clear spacing = 7.00 in	Clear cover = 1.50 in
Confinement: Tied			
phi(a) = 0.8, phi(b) = 0.9, phi(c) = 0.65			

Figure 4: Flexural capacity of wide beam at midspan

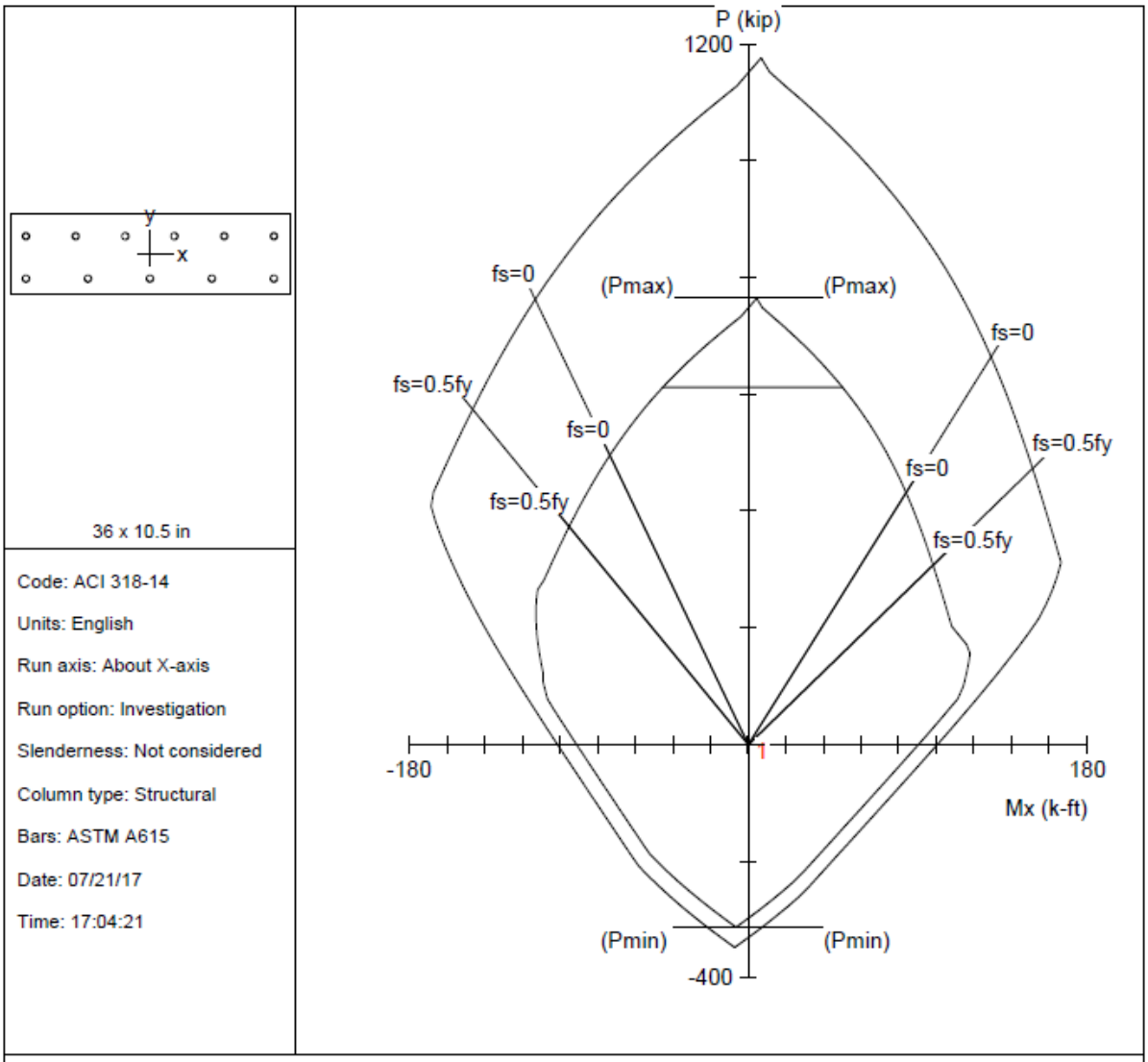

Code: ACI 318-14

Units: English

Run axis: About X-axis

Run option: Investigation

Slenderness: Not considered

Column type: Structural

Bars: ASTM A615

Date: 07/21/17

Time: 17:04:21

STRUCTUREPOINT - spColumn v5.11 (TM). Licensed to: CTL Group. License ID: 66496-1056230-4-20F7D-2BEED

File: D:\2017\231701 City of Austin Fire Station PHASE-2\FS-3\Capacity spColumn\Wide-Beam-Support.col

Project: FS #3

Column: 3-ft Support		Engineer: HRL	
f'c = 2.639 ksi	fy = 40 ksi	Ag = 378 in^2	11 #8 bars
Ec = 2928 ksi	Es = 29000 ksi	As = 8.69 in^2	rho = 2.30%
fc = 2.24315 ksi	e_yt = 0.00137931 in/in	Xo = 0.00 in	Ix = 3472.88 in^4
e_u = 0.003 in/in		Yo = 0.00 in	Iy = 40824 in^4
Beta1 = 0.85		Min clear spacing = 4.50 in	Clear cover = 1.50 in
Confinement: Tied			
phi(a) = 0.8, phi(b) = 0.9, phi(c) = 0.65			

Figure 5: Flexural capacity of wide beam at support

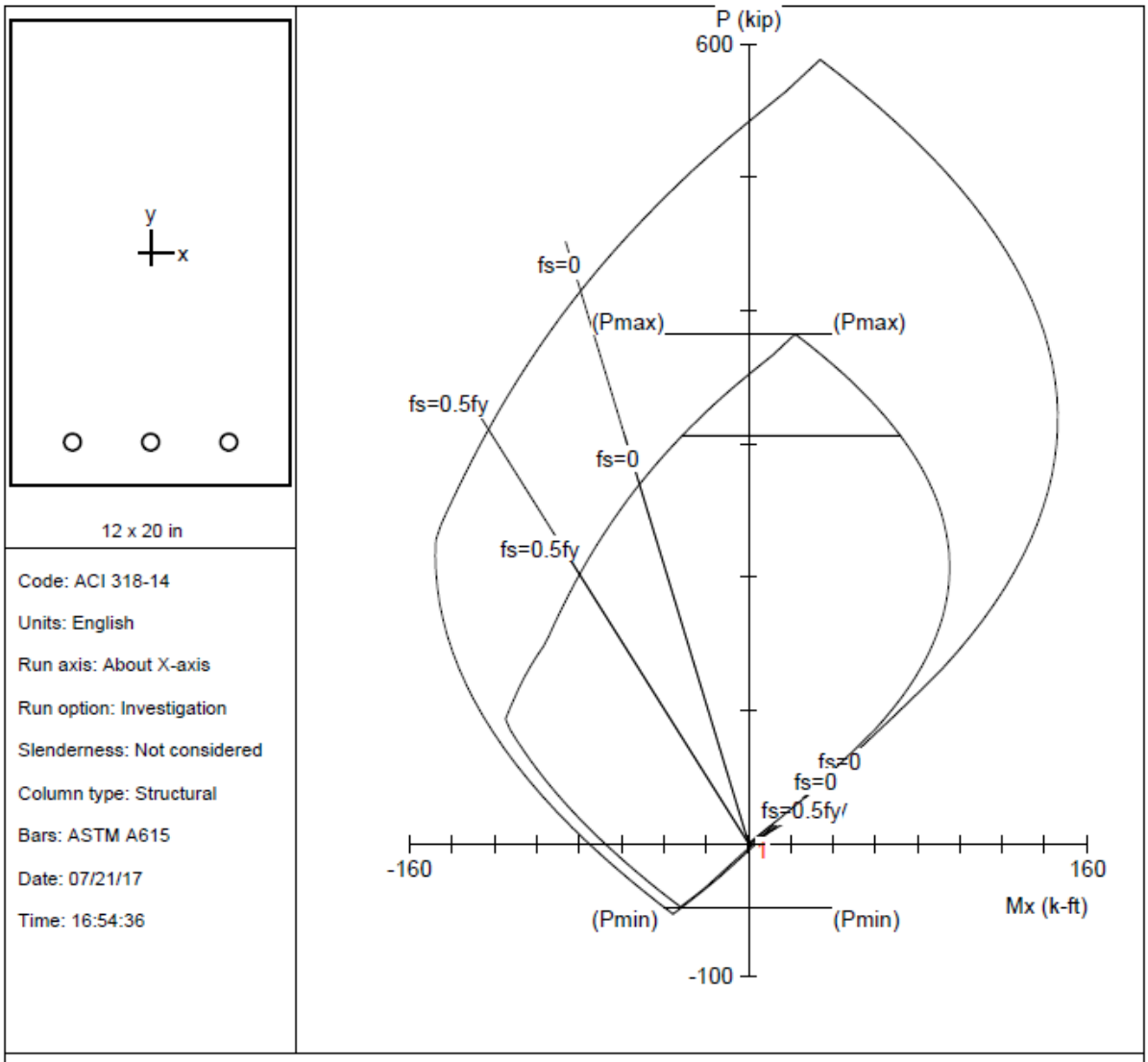

STRUCTUREPOINT - spColumn v5.11 (TM). Licensed to: CTL Group. License ID: 66496-1056230-4-20F7D-2BEED

File: D:\2017\231701 City of Austin Fire Station PHASE-2\FS-3\Capacity spColumn\Narrow-Beam-Midspan.col

Project: FS #3

Column: 1-ft Midspan		Engineer: HRL	
f'c = 2.639 ksi	fy = 40 ksi	Ag = 240 in^2	3 #6 bars
Ec = 2928 ksi	Es = 29000 ksi	As = 1.32 in^2	rho = 0.55%
fc = 2.24315 ksi	e_yt = 0.00137931 in/in	Xo = 0.00 in	Ix = 8000 in^4
e_u = 0.003 in/in		Yo = 0.00 in	Iy = 2880 in^4
Beta1 = 0.85		Min clear spacing = 2.63 in	Clear cover = 1.50 in
Confinement: Tied			
phi(a) = 0.8, phi(b) = 0.9, phi(c) = 0.65			

Figure 6: Flexural capacity of narrow beam at midspan

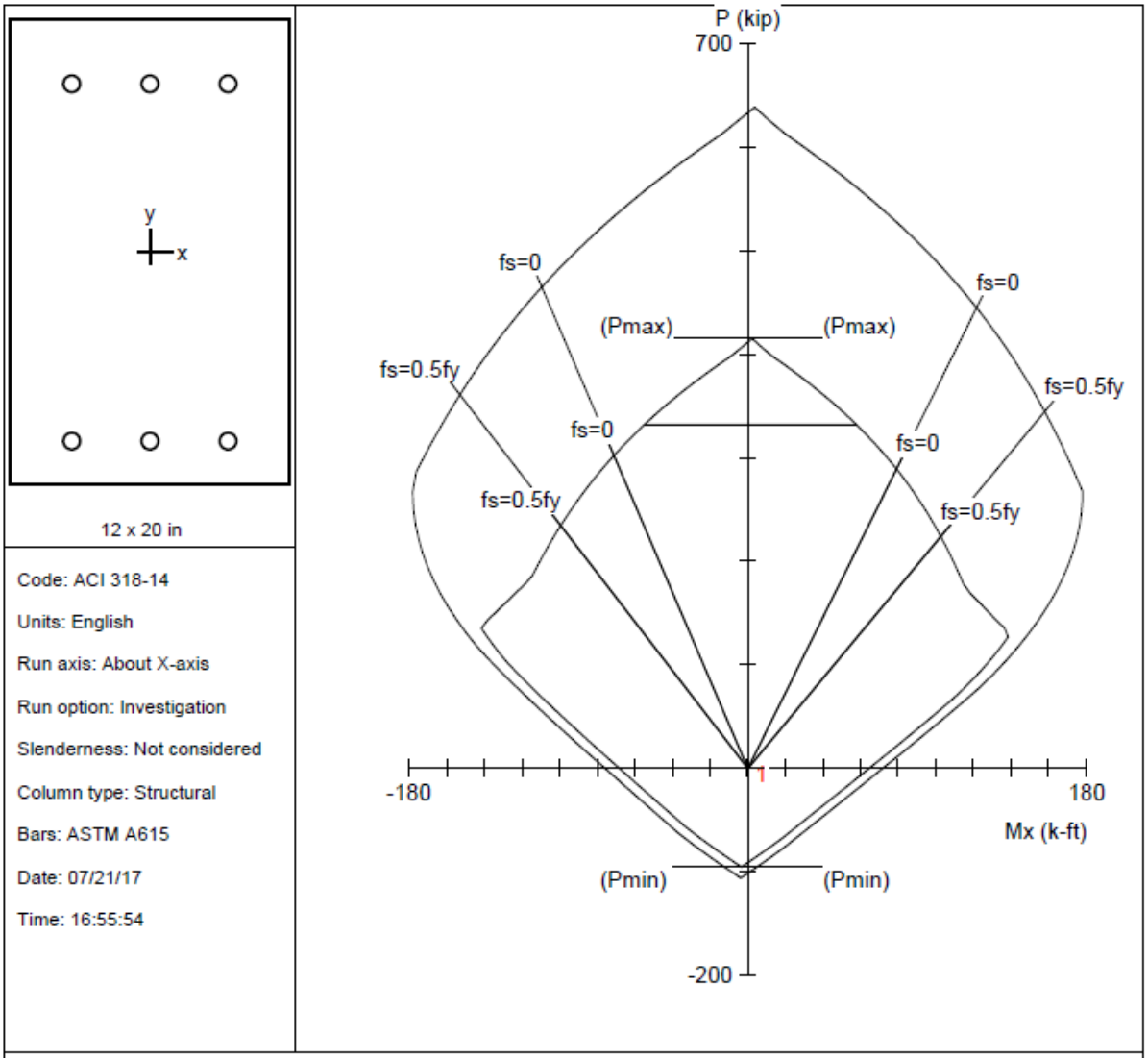

Code: ACI 318-14

Units: English

Run axis: About X-axis

Run option: Investigation

Slenderness: Not considered

Column type: Structural

Bars: ASTM A615

Date: 07/21/17

Time: 16:55:54

STRUCTUREPOINT - spColumn v5.11 (TM). Licensed to: CTL Group. License ID: 66496-1056230-4-20F7D-2BEED

File: D:\2017\231701 City of Austin Fire Station PHASE-2\FS-3\Capacity spColumn\Narrow-Beam-Support.col

Project: FS #3

Column: 1-ft Support		Engineer: HRL	
f'c = 2.639 ksi	fy = 40 ksi	Ag = 240 in^2	6 #6 bars
Ec = 2928 ksi	Es = 29000 ksi	As = 2.64 in^2	rho = 1.10%
fc = 2.24315 ksi	e_yt = 0.00137931 in/in	Xo = 0.00 in	Ix = 8000 in^4
e_u = 0.003 in/in		Yo = 0.00 in	Iy = 2880 in^4
Beta1 = 0.85		Min clear spacing = 2.63 in	Clear cover = 1.50 in
Confinement: Tied			
phi(a) = 0.8, phi(b) = 0.9, phi(c) = 0.65			

Figure 7: Flexural capacity of narrow beam at support

Table 2: Shear capacity

Member		Slab	Slab	Slab	Wide	Narrow
		1-ft Strip	99-in. Strip	151-in. Strip	Beam	Beam
f'c	psi	2,639	2,639	2,639	2,639	2,639
b	in	12	99	151	36	12
d	in	4.25	4.25	4.25	8.50	18.13
f	---	0.75	0.75	0.75	0.75	0.75
Vc	kips/ft	5.2	43.2	65.9	31.4	22.3
f Vc	kips/ft	3.9	32.4	49.5	23.6	16.8
Stirrups		---	---	---	---	#4@9
Av	in2					0.4
fy	psi					40
s	in					9
Vs	kip					32.2
f Vs	kip					24.2
f Vn	kip	3.93	32.4	49.5	23.6	40.9

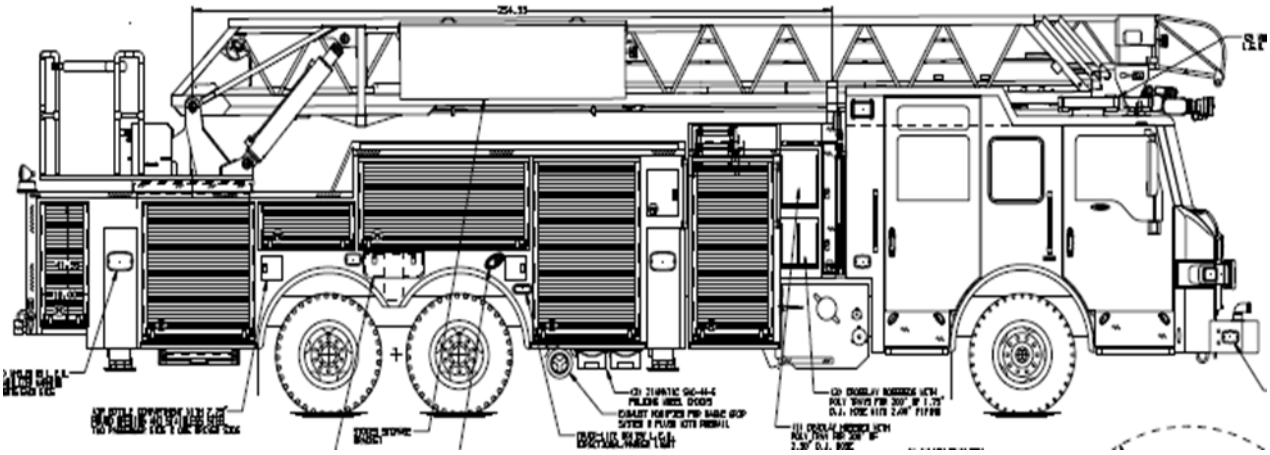

Front Axle	Rear Axle	Total
lb	lb	lb
22,800	54,000	76,800

	Axle	Axle Weight	Wheel Weight	Area	Length	Width	Pressure
Wheel footprint		(lb)	(lb)	(in^2)	(in)	(in)	(psi)
per CalTrans	front	22,800	11400	114	6.8	16.9	100
2004 Section 3.3	rear	54,000	13500	135	7.3	18.4	100

	Axle	Axle Weight	Wheel Weight	Area	Length	Width	Pressure	g	IM
Wheel footprint		(lb)	(lb)	(in^2)	(in)	(in)	(psi)		
per AASHTO 2010	front	22,800	11400	91.2	6.4	14.3	125	1	0
Section 3.6.1.2.5	rear	54,000	13500	108	6.4	16.9	125	1	0

Standard truck	Length	Width
wheel footprint	a	b
per AASHTO 2010	(in)	(in)
Section 3.6.1.2.5	10.0	20.0

Figure 8: Ladder truck

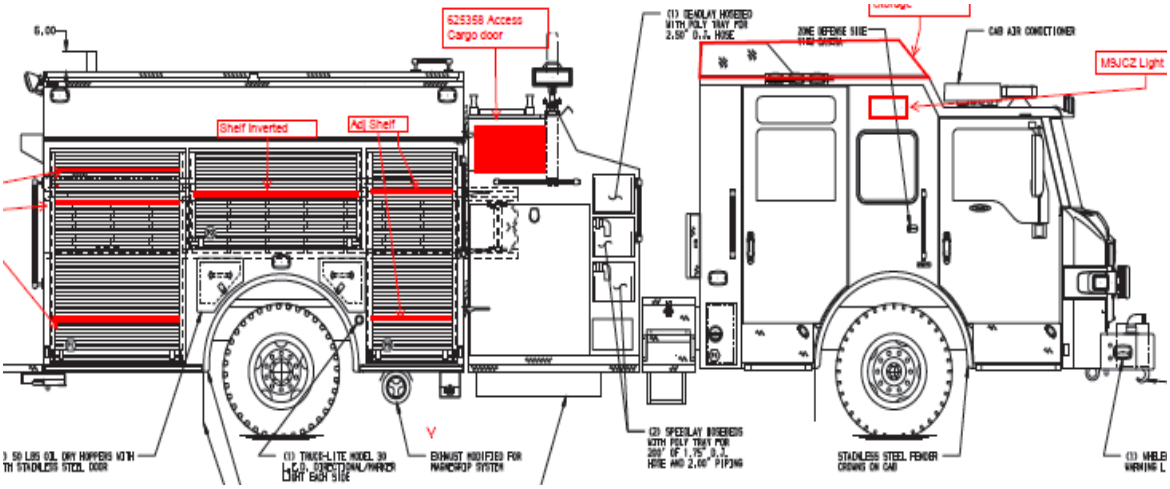

Front Axle	Rear Axle	Total
lb	lb	lb
22,800	27,000	49,800

Wheel footprint per CalTrans 2004 Section 3.3	Axle	Axle Weight	Wheel Weight	Area	Length	Width	Pressure
		(lb)	(lb)	(in^2)	(in)	(in)	(psi)
	front	22,800	11400	114	6.8	16.9	100
	rear	27,000	13500	135	7.3	18.4	100

Wheel footprint per AASHTO 2010 Section 3.6.1.2.5	Axle	Axle Weight	Wheel Weight	Area	Length	Width	Pressure	g	IM
		(lb)	(lb)	(in^2)	(in)	(in)	(psi)		
	front	22,800	11400	91	6.4	14.3	125	1	0
	rear	27,000	13500	108	6.4	16.9	125	1	0

Standard truck wheel footprint per AASHTO 2010 Section	Length	Width
	a	b
	(in)	(in)
	10.0	20.0

Figure 9: Engine truck

Figure 10: Continuous 1-ft strip model of slab

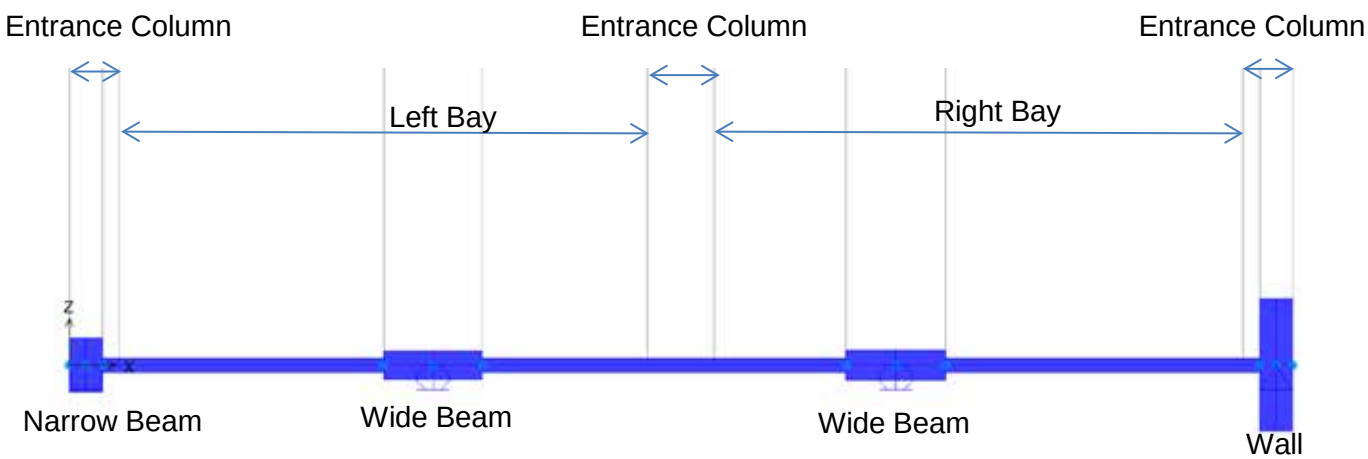

Figure 11: Continuous 1-ft strip model of slab showing member thicknesses

Table 3: Effective width of one-way slab per AASHTO LRFD 2010 Section 4.6.2.1.3

Span		Left	Middle	Right
Span length	ft	8.5	11	9.5
Width for M +ve	in.	82	99	89
Width for M -ve	in.	74	81	77

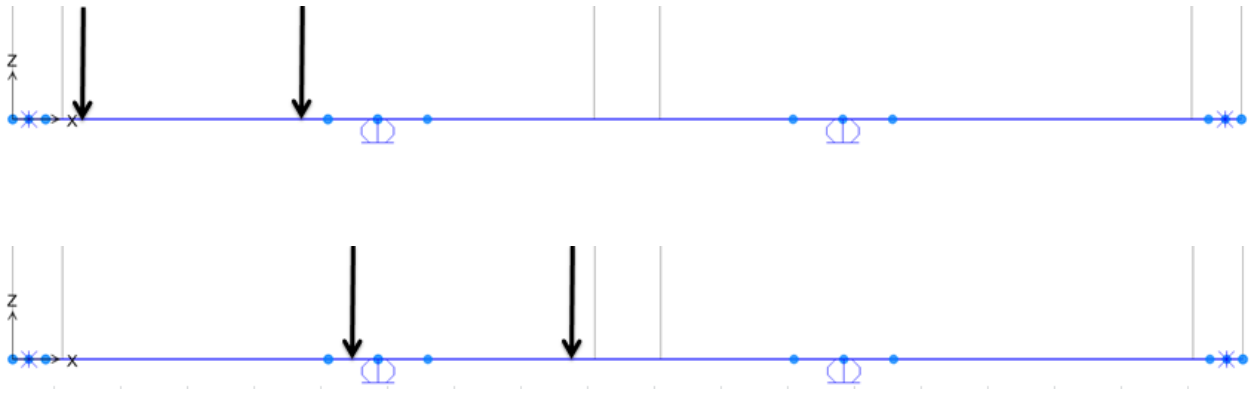

Figure 12: 27-kip axle extreme positions in the left bay

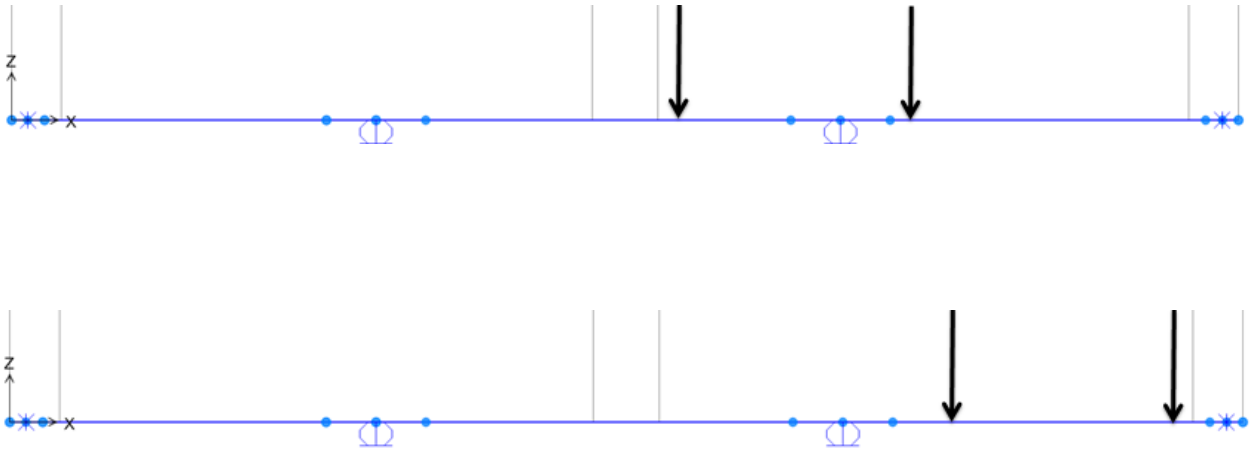

Figure 13: 27-kip axle extreme positions in the right bay

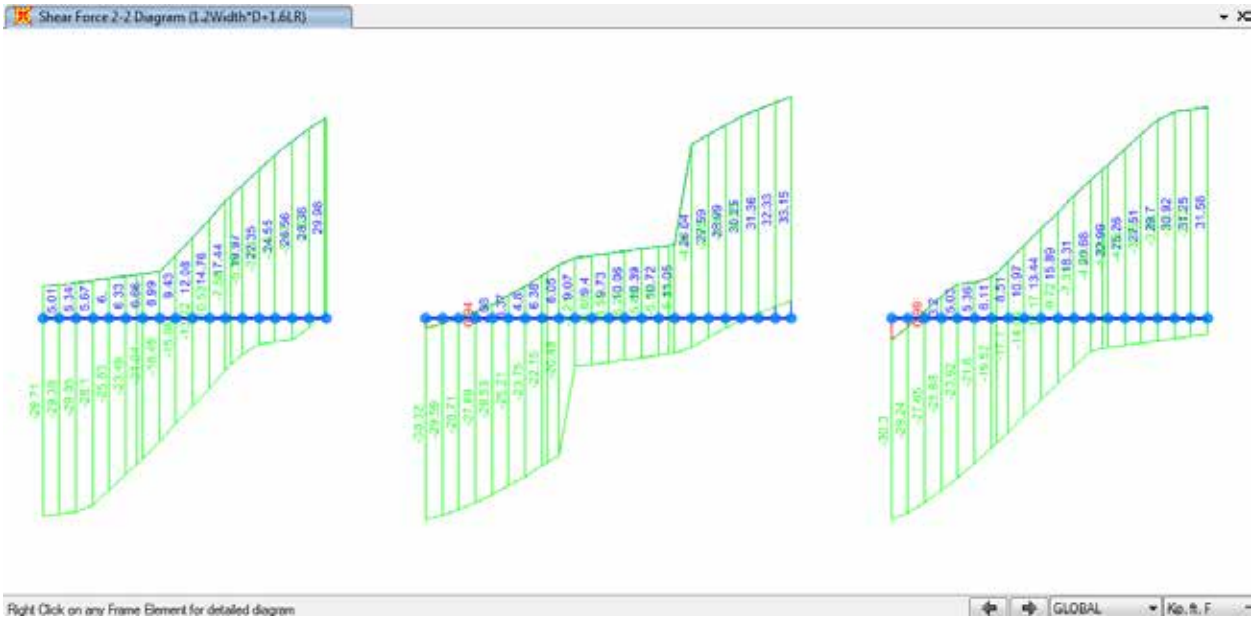

Figure 14: Shear force envelope due to factored self-weight of 99-in. strip plus factored truck loads in left and right bays

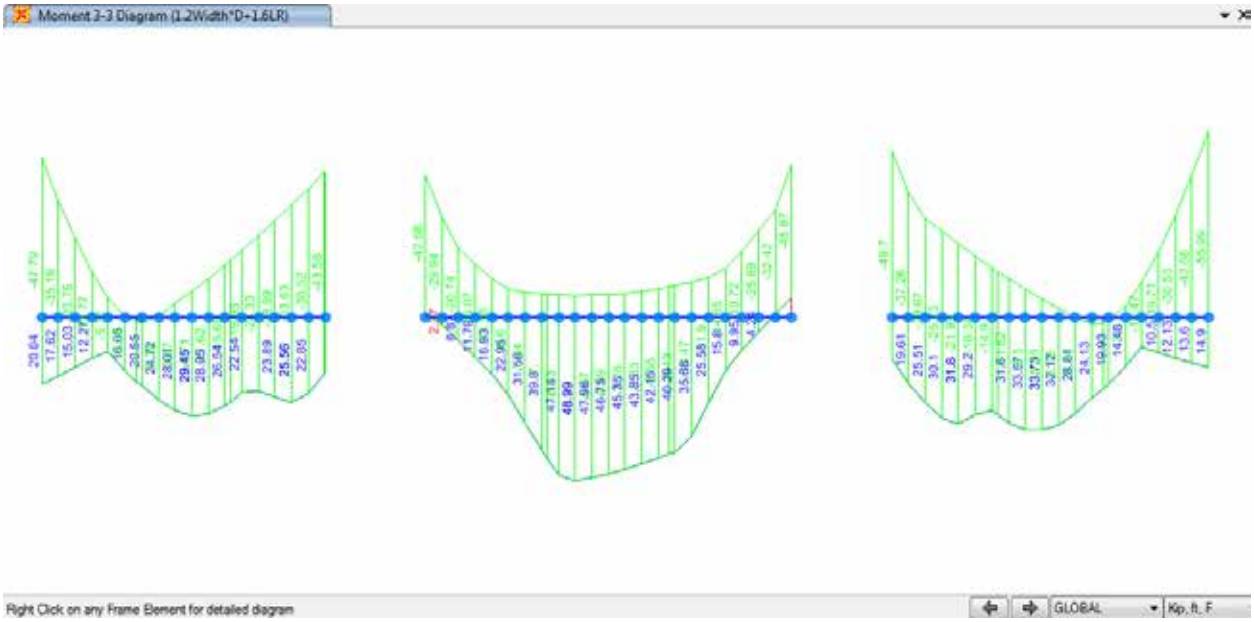

Figure 15: Bending moment envelope due to factored self-weight of 99-in. strip plus factored truck loads in left and right bays

Table 4: Slab shear force and bending moment demand capacity ratios (DCR)

99 in - Slab Strip under a Single Axle	Vu	f Vn	DCR-v	Mu+ve	f Mn+ve	DCR-M+ve	Mu-ve	f Mn-ve	DCR-M-ve
	kip	kip	---	ft-kip	kip	---	ft-kip	kip	---
	33.2	32.4	**1.02**	49.0	29.9	**1.64**	56.0	29.7	**1.89**

151 in - Slab Strip under a Tandem Axle	Vu	f Vn	DCR-v	Mu+ve	f Mn+ve	DCR-M+ve	Mu-ve	f Mn-ve	DCR-M-ve
	kip	kip	---	ft-kip	kip	---	ft-kip	kip	---
	66.3	49.5	**1.34**	98.0	45.6	**2.15**	112.0	45.3	**2.47**

Table 5: Slab punching shear demand capacity ratio (DCR)

Wheel Weight	kips	11.4	13.5
f'_c	psi	2639	2639
l	---	1	1
f	---	0.75	0.75
Type	---	interior	interior
c_1	in.	6.40	6.40
c_2	in.	14.30	16.90
d	in.	3.81	3.81
V_u	kips	18.2	21.6
M_x	kips.in	0	0
M_y	kips.in	0	0
b_0	in.	57	62
A_c	in^2	216	236
J_{cx}	in^4	4372	4889
J_{cy}	in^4	10330	14189
v_{u1}	psi	84	92
v_{ux}	psi	0	0
v_{uy}	psi	0	0
$\lvert v_{u1} \rvert$	psi	84	92
$\lvert v_{ux} \rvert$	psi	0	0
$\lvert v_{uy} \rvert$	psi	0	0
v_u	psi	84	92
b	---	2.23	2.64
a_s	---	40.00	40.00
4	---	4.00	4.00
$2 + 4/b$	---	3.79	3.51
$2 + a_s d / b_0$	---	4.69	4.47
$f\ v_c$	psi	146	135
DCR	---	0.58	0.68

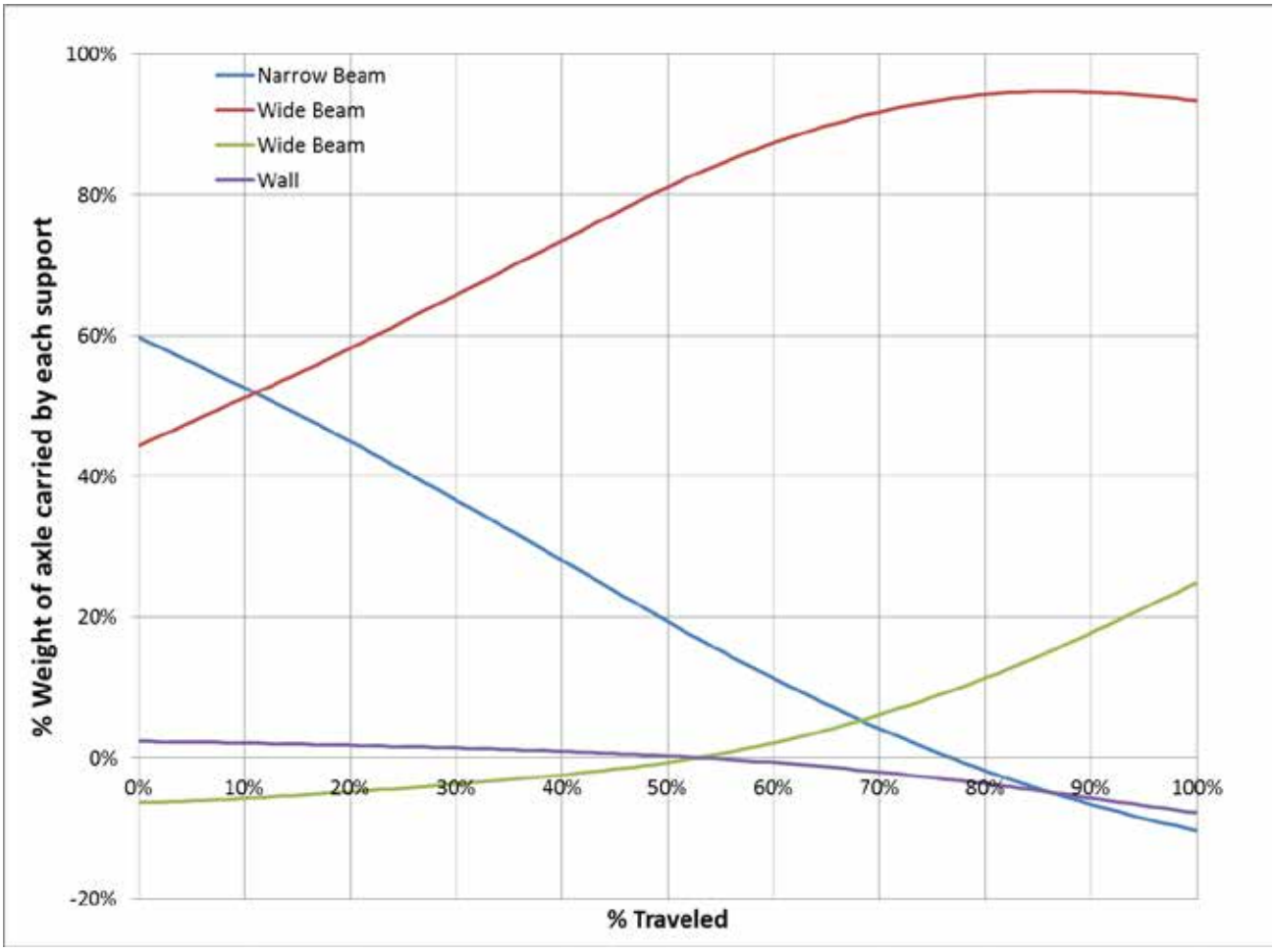

Figure 16: Reactions due to 27-kip axle positions in the transverse direction in left bay

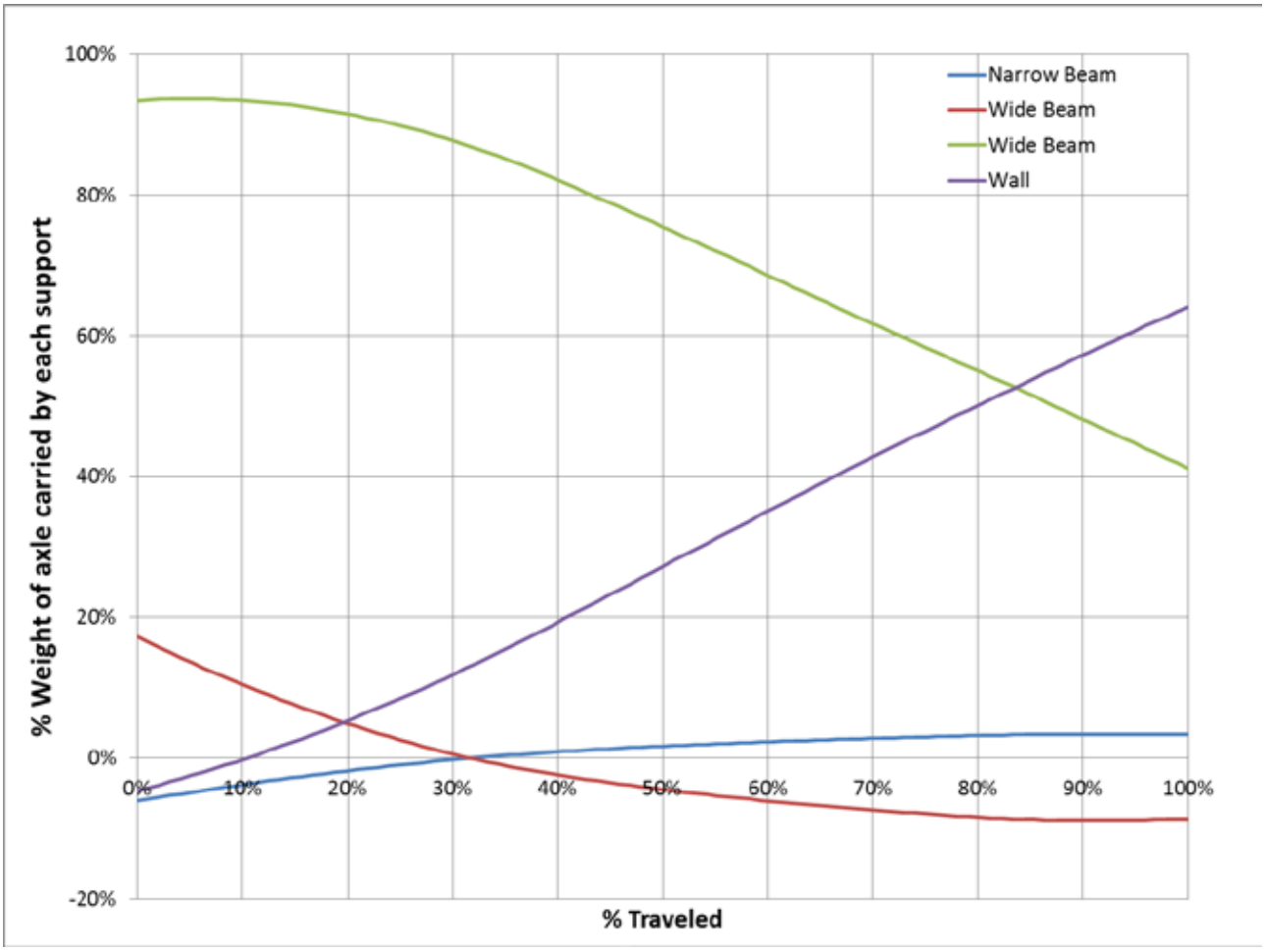

Figure 17: Reactions due to 27-kip axle positions in the transverse direction in right bay

Table 6: Percentage of the axle load that is carried by each support

	Narrow Beam	Wide Beam	Wide Beam	Wall
Truck on left bay	60%	95%	25%	2%
Truck on right bay	3%	17%	94%	64%

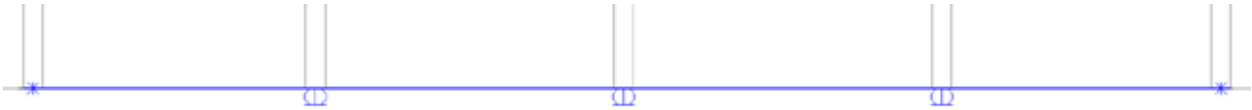

Figure 18: Continuous model of wide beam

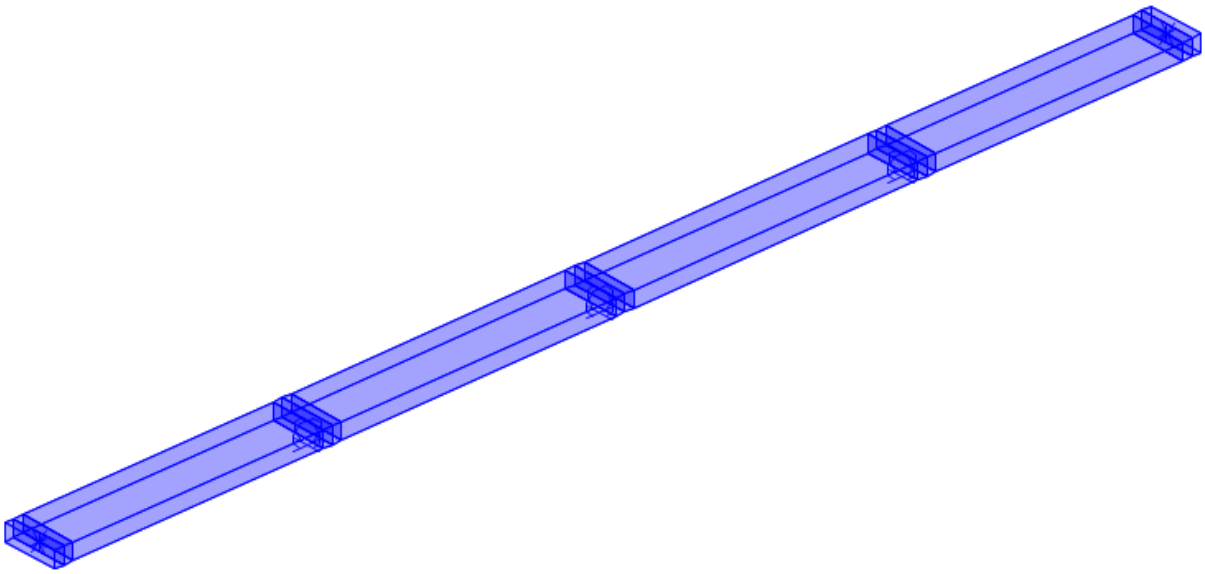

Figure 19: Model of wide beam showing member cross section

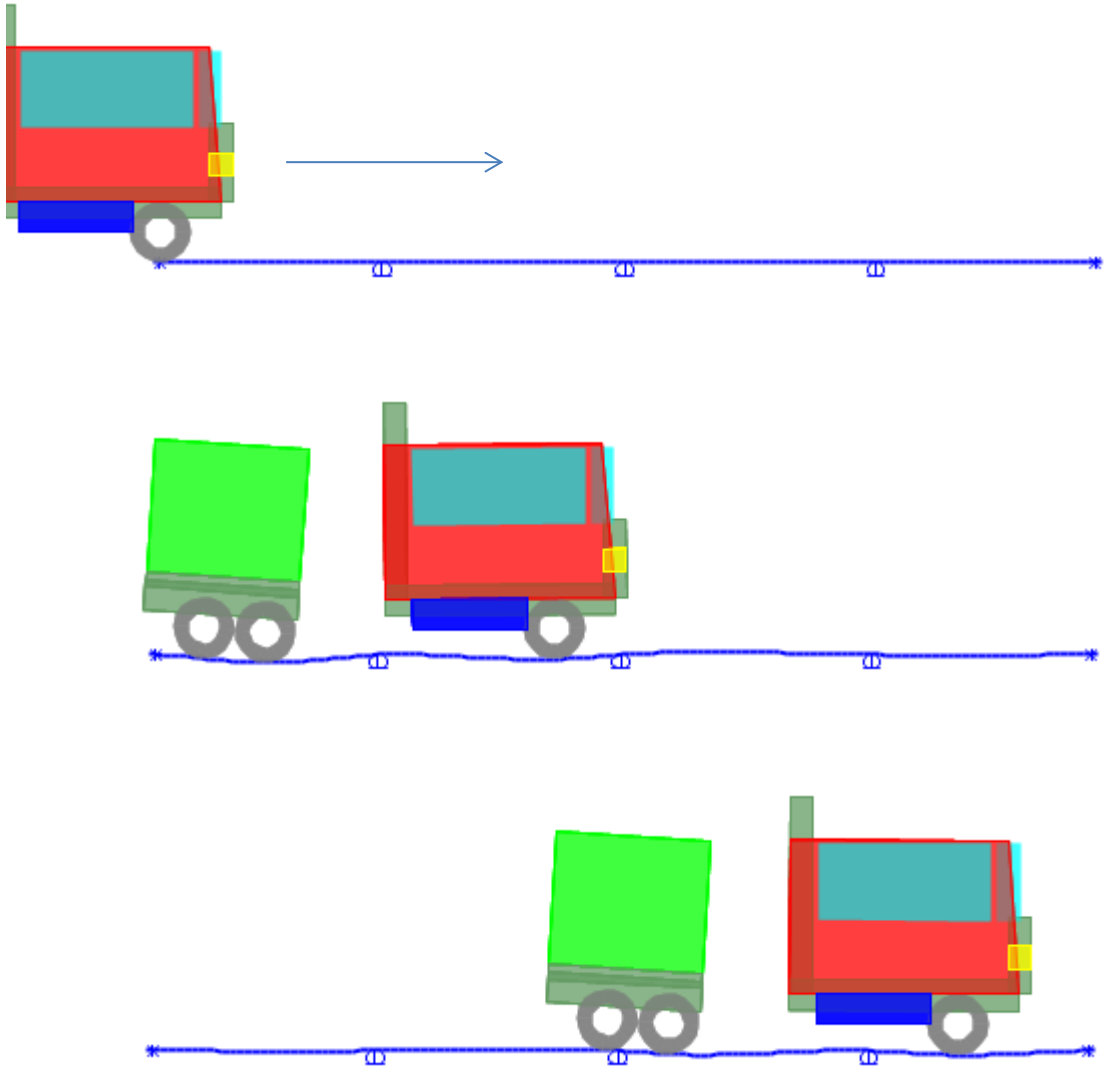

Figure 20: Ladder truck moving inside

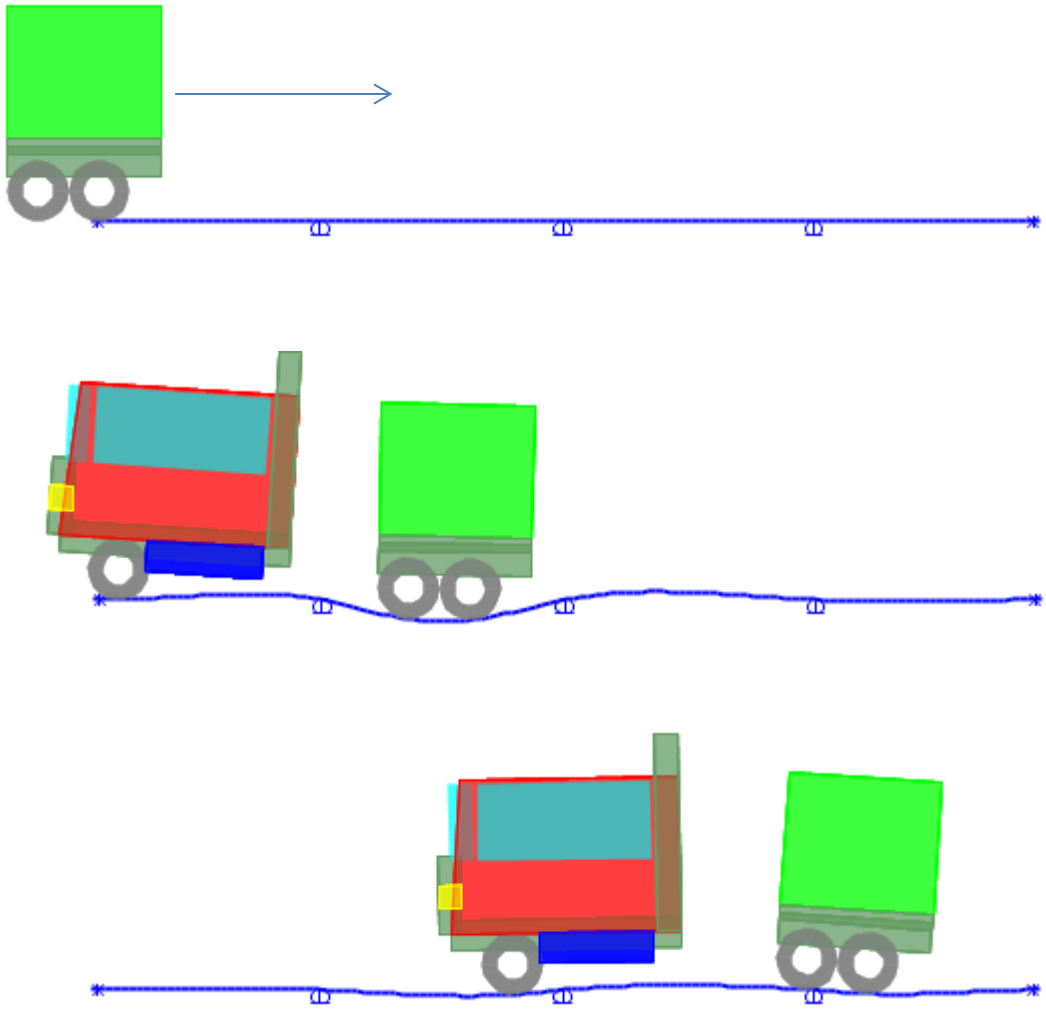

Figure 21: Ladder truck backing up

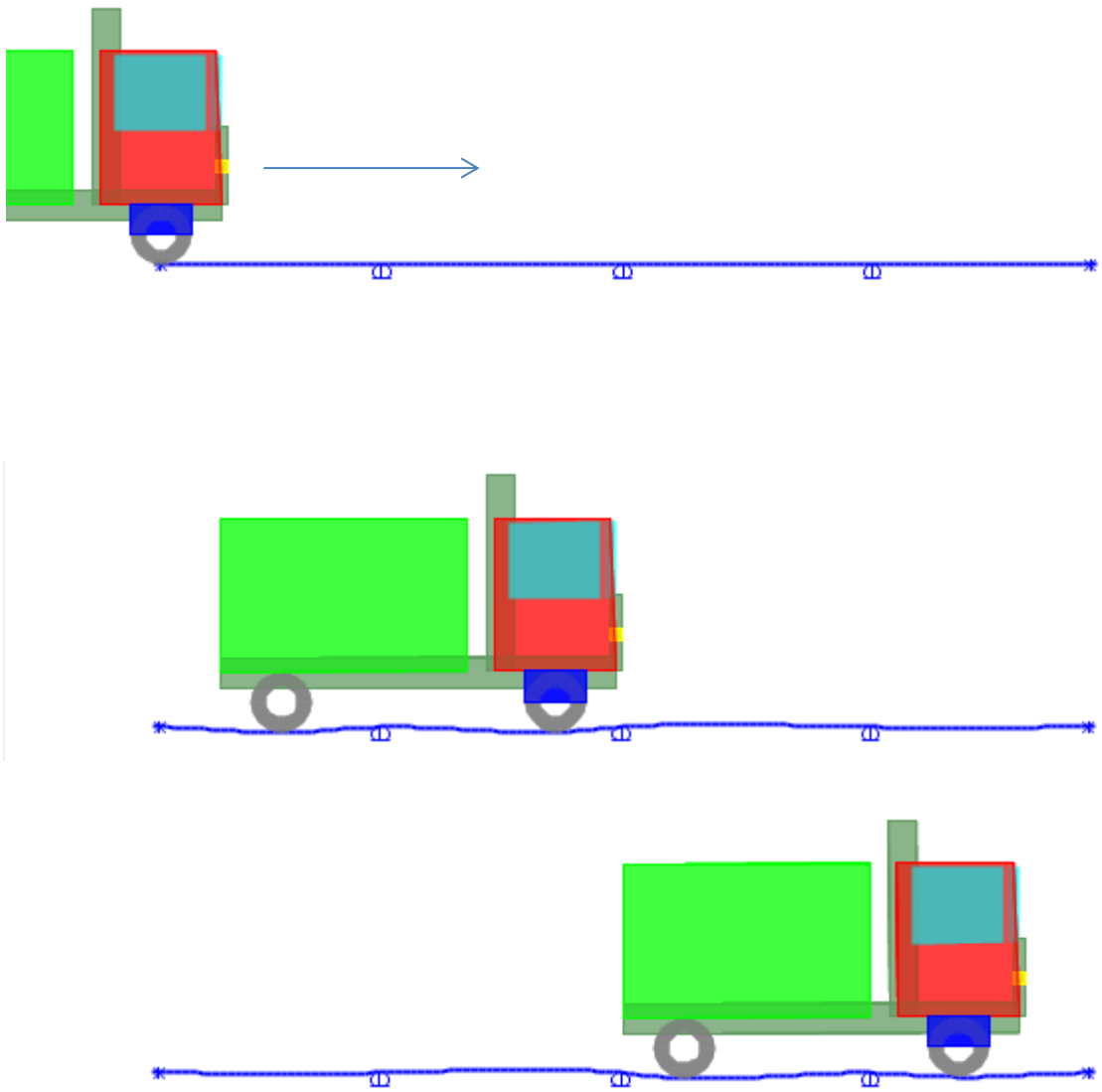

Figure 22: Engine truck moving inside

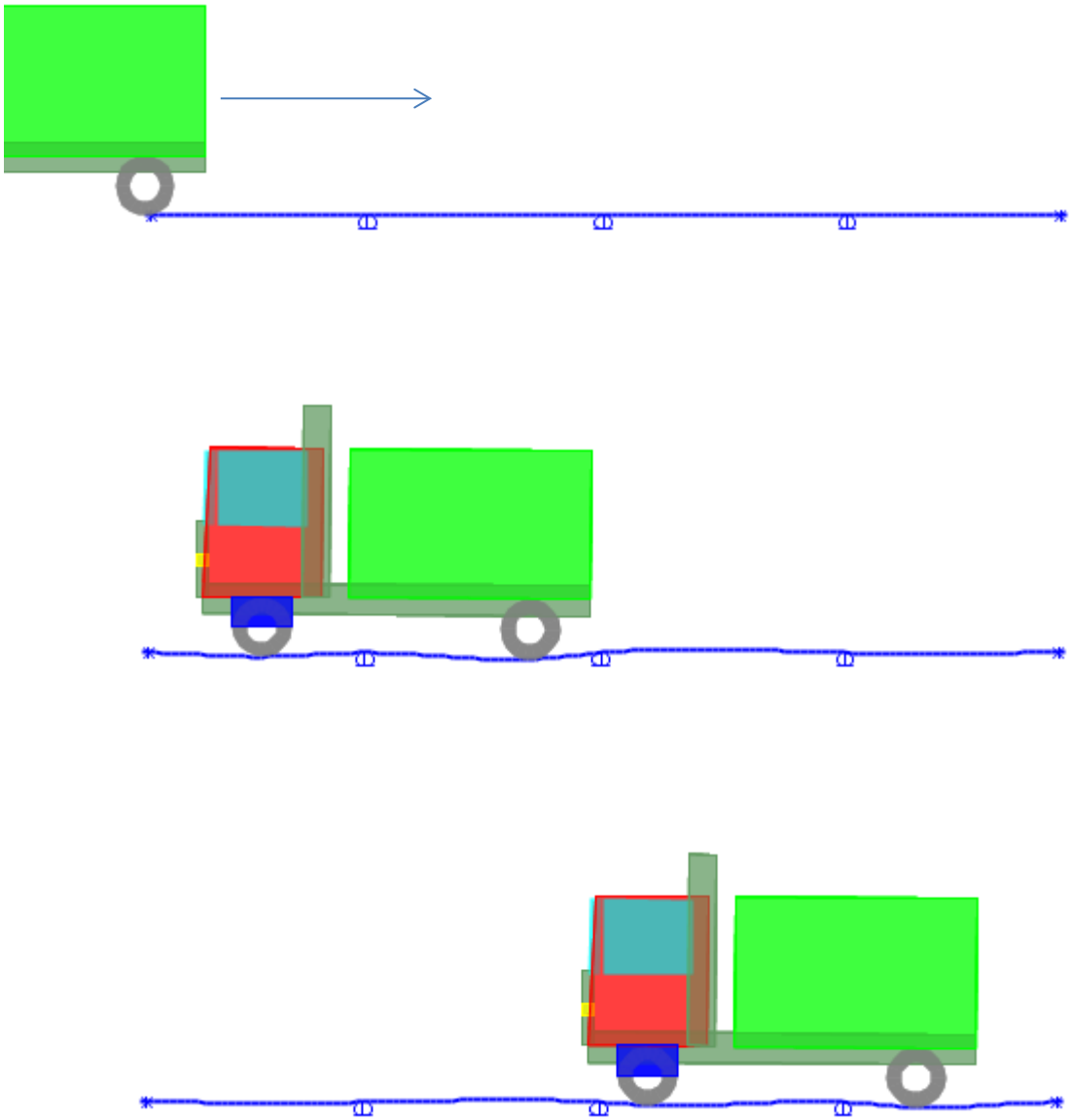

Figure 23: Engine truck backing up

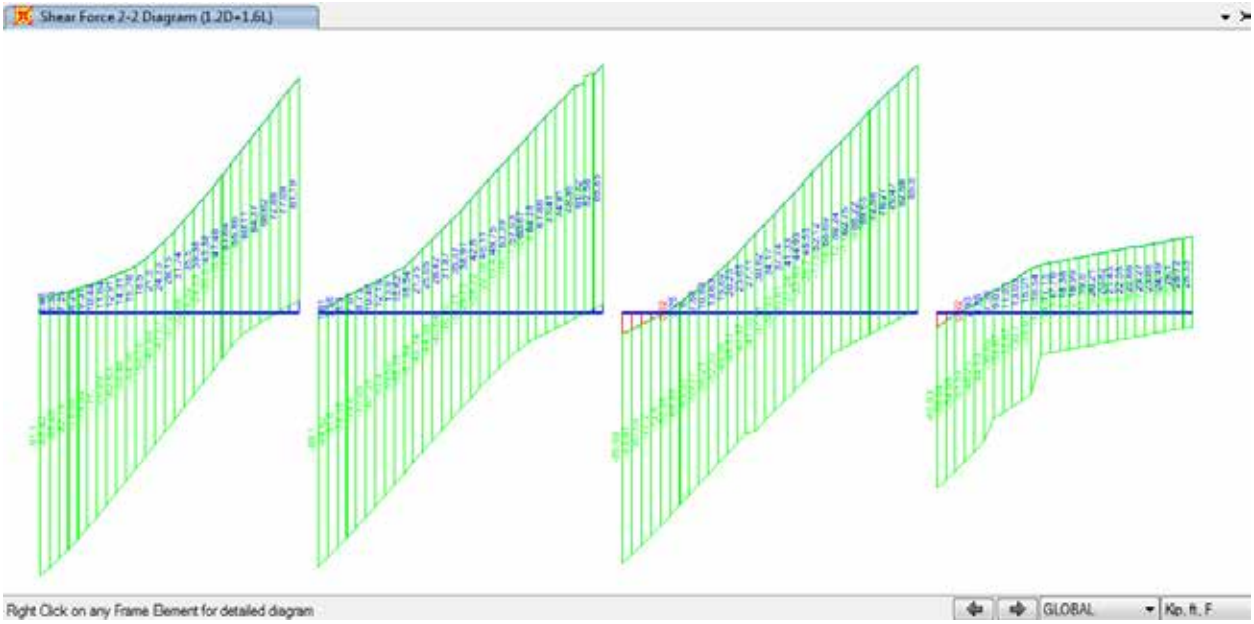

Figure 24: Wide beam shear envelope due to factored self-weight plus factored truck loads

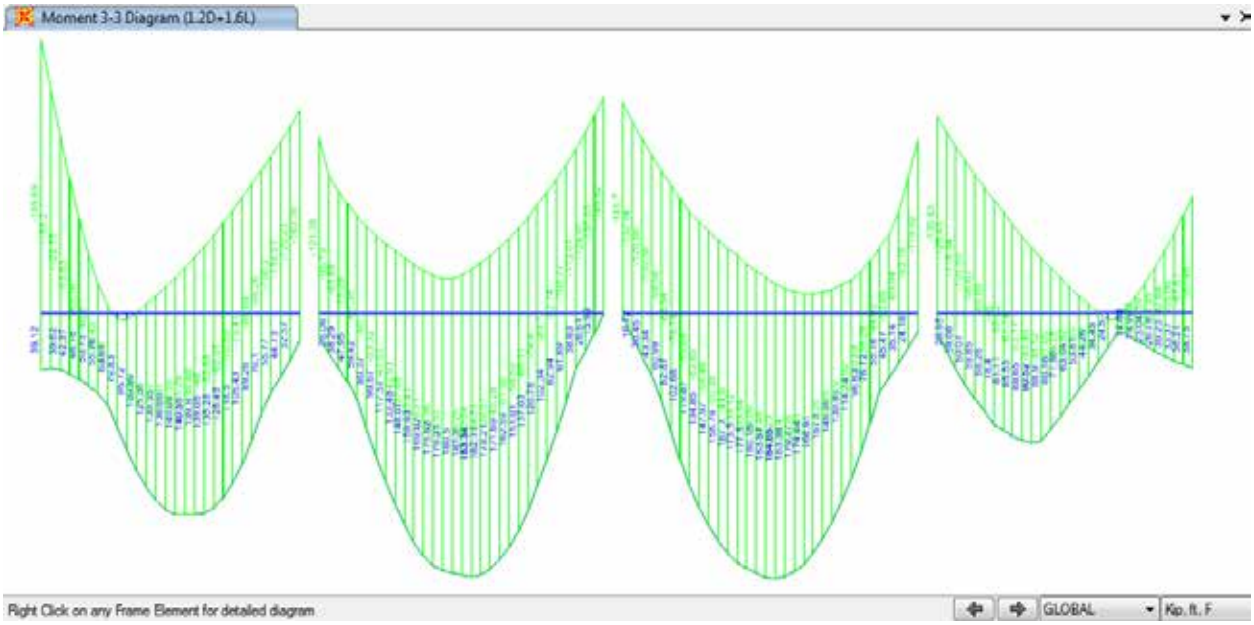

Figure 25: Wide beam moment envelope due to factored self-weight plus factored truck loads

Table 7: Wide beam shear force and bending moment demand capacity ratios (DCR)

	Vu	f Vn	DCR-v	Mu+ve	f Mn+ve	DCR-M+ve	Mu-ve	f Mn-ve	DCR-M-ve
	kip	kip	---	ft-kip	kip	---	ft-kip	kip	---
Wide Beam	91.1	23.6	**3.86**	184.7	89.1	**2.07**	189.7	90.3	**2.10**

Figure 26: Continuous model of narrow beam

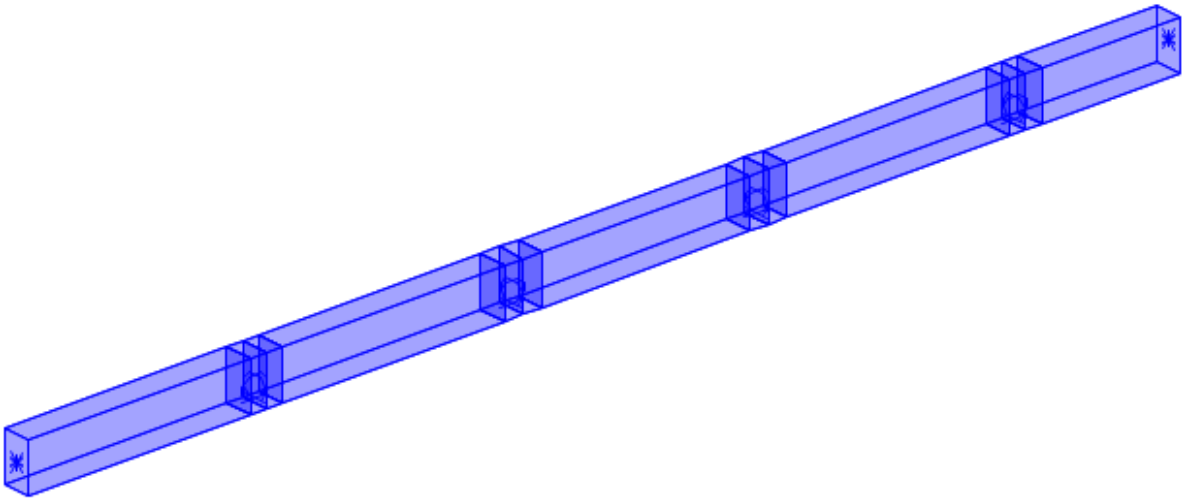

Figure 27: Model of narrow beam showing member cross section

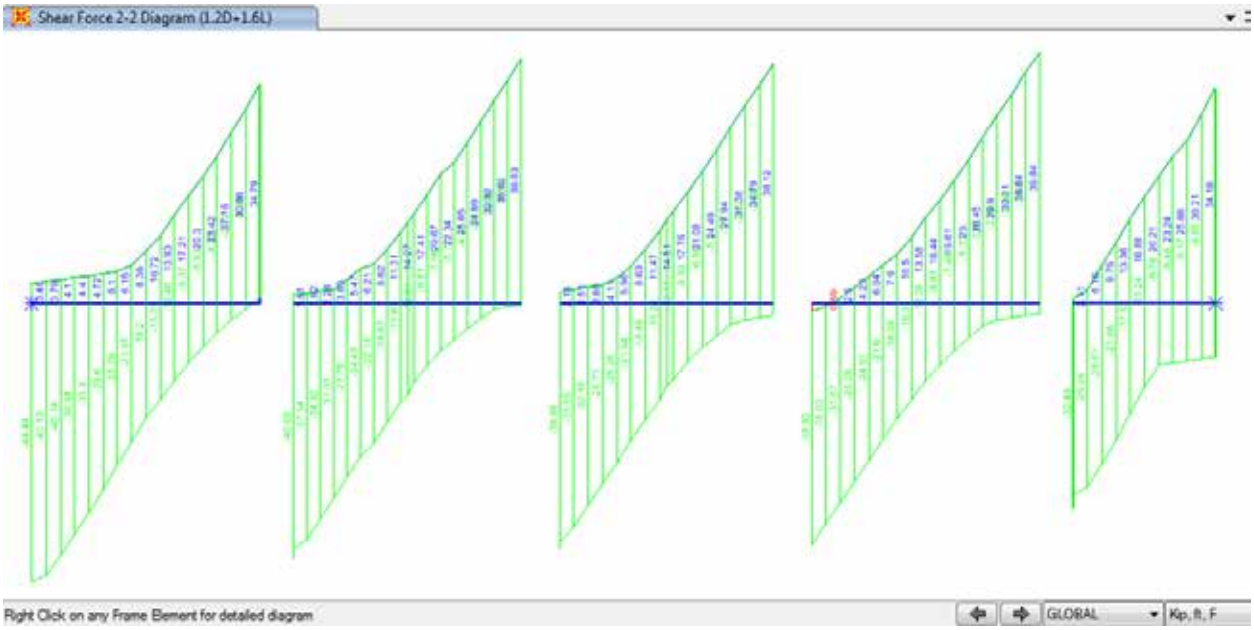

Figure 28: Narrow beam shear envelope due to factored self-weight plus factored truck loads

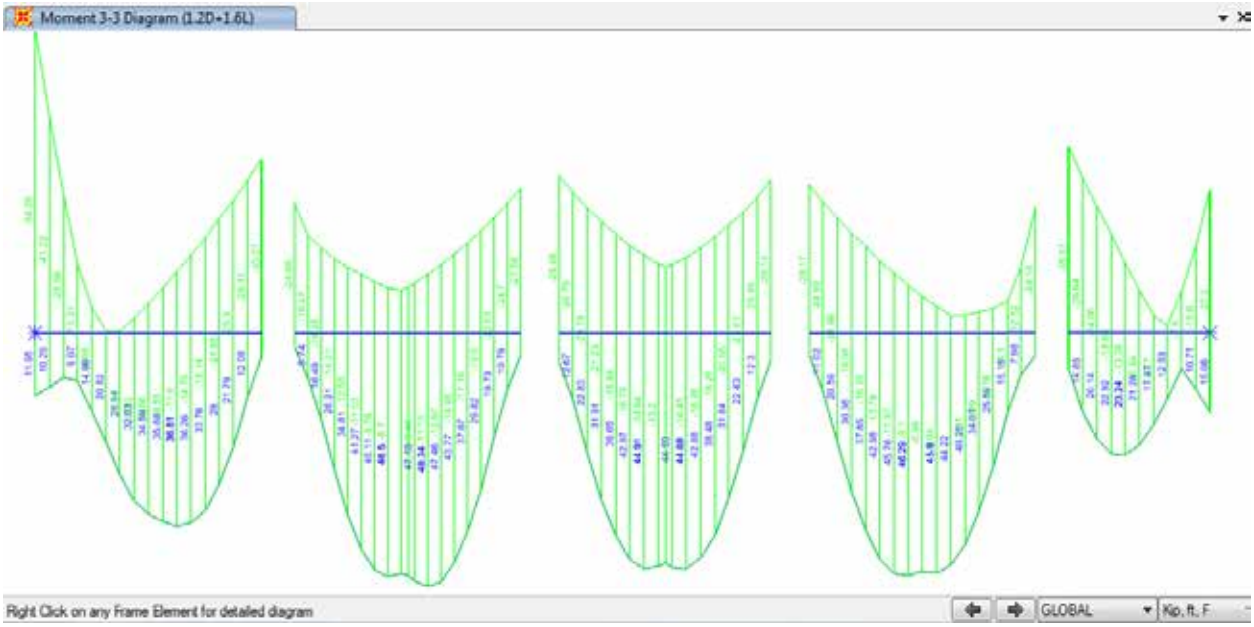

Figure 29: Narrow beam moment envelope due to factored self-weight plus factored truck loads

Table 8: Narrow beam shear force and bending moment demand capacity ratios (DCR)

	Vu	f Vn	DCR-v	Mu+ve	f Mn+ve	DCR-M+ve	Mu-ve	f Mn-ve	DCR-M-ve
	kip	kip	---	ft-kip	kip	---	ft-kip	kip	---
Narrow Beam	44.4	40.9	**1.09**	48.3	67.9	**0.71**	58.3	64.4	**0.91**

Table 9: Summary of shear force and bending moment demand capacity ratios (DCR)

	Vu	f Vn	DCR-v	Mu+ve	f Mn+ve	DCR-M+ve	Mu-ve	f Mn-ve	DCR-M-ve
	kip	kip	---	ft-kip	kip	---	ft-kip	kip	---
151 in - Slab Strip under a Tandem Axle	66.3	49.5	**1.34**	98.0	45.6	**2.15**	112.0	45.3	**2.47**
Wide Beam	91.1	23.6	**3.86**	184.7	89.1	**2.07**	189.7	90.3	**2.10**
Narrow Beam	44.4	40.9	**1.09**	48.3	67.9	**0.71**	58.3	64.4	**0.91**

Appendix D

Structural Analyses – Fire Station No. 22

STRUCTURAL ANALYSIS AND DESIGN REVIEW OF

CITY OF AUSTIN

FIRE STATION NO. 22

PHASE 2

This appendix describes the analysis and design review of Fire Station No. 22 floor system.

DESCRIPTION OF THE FLOOR SYSTEM

Fire Station No. 22 floor system is described in the main body of the report.

CODES AND STANDARDS

The design review of Fire Station No. 22 floor system is based on ACI 318-14.

MATERIAL PROPERTIES

An equivalent concrete compressive strength of 4823 psi is obtained for the joists from the statistical analysis of the concrete core test data. An elastic modulus of 3959 ksi is calculated per ACI 318-14 Equation 19.2.2.1.b. A weight density of 111 pcf is obtained from the concrete core test data and used in the structural analysis.

An equivalent concrete compressive strength of 4572 psi is obtained for the beams from the statistical analysis of the concrete core test data. An elastic modulus of 3854 ksi is calculated

per ACI 318-14 Equation 19.2.2.1.b. A weight density of 143 pcf is obtained from the concrete core test data and used in the structural analysis.

Per original construction drawings, mild deformed reinforcing steel is assumed to conform to ASTM A615 Grade 40..

The material properties used in the analyses are summarized in Table 1.

MEMBER CAPACITIES

The flexural capacity of joist and beams are calculated using the spColumn computer program as shown in Figures 1 to 6.

The shear capacity of joist and beams are calculated and summarized in Table 2.

LOADS

Gravity dead load includes the self-weight of the floor system. The self-weight of the floor system is calculated using a weight density of 111 pcf for joists and 143 pcf for beams.

Gravity live load includes a ladder truck in one bay and an engine truck on the other bay. The ladder truck weight and wheel footprint calculations are shown in Figure 7. The engine truck weight and wheel footprint calculations are shown in Figure 8.

In structural analysis, the length of the tire footprint (parallel to traffic direction) is assumed 10 inches and the width of the footprint (normal to traffic direction) is assumed 20 inches similar to those of a standard truck per AASHTO LRFD 2010.

No other live loads besides the truck loads are considered in the structural analyses.

JOIST ANALYSIS

A single-span pinned joist is analyzed under dead and live loads. Two different joist spans are present in the garage. The analysis model for the long joist is shown in Figures 9 and 10.

An analysis of the long joist is conducted under a 27-kip axle load as shown in Figure 11. In this analysis, possible truck/axle positions are considered to be anywhere between a far left position and a far right position within the bay.

The shear force and bending moment envelopes are shown in Figures 12 and 13. The maximum shear force and positive bending moment from these envelope diagrams constitute the maximum demand (D) on the joist.

A similar analysis is conducted for the short joist and the results are included in Figures 14 and 15.

JOIST DESIGN REVIEW

The long and short joist shear force and bending moment demand capacity ratios (DCR) are summarized in Tables 3 and 4.

JOIST REACTIONS

Figure 16 shows the joist reactions as the axle is positioned from one side of the long joist to the other side of the long joist. Figure 17 shows the joist reactions as the axle is positioned from one side of the short joist to the other side of the short joist.

These reactions are used to calculate the percentage of the axle load that is carried by each support as shown in Table 5.

BEAM B-8 ANALYSIS

A two-span continuous model of the Beam B-8 is analyzed under dead and live loads. The analysis model is shown in Figures 18 and 19.

Analyses of the beam are conducted under a 27-kip axle load on the left span and a 27-kip axle load on the right span as shown in Figure 20. In these analyses, the 27-kip axles are positioned at alternative locations in the floor transverse direction (transverse to the truck path). The results of these analyses are combined to obtain the envelope of the results due to two trucks in two bays.

The shear force and bending moment envelopes are shown in Figures 21 and 22. The maximum shear force, positive bending moment, and negative moment from these envelope diagrams constitute the maximum demand (D) on the beam.

BEAM B-8 DESIGN REVIEW

The wide beam shear force and bending moment demand capacity ratios (DCR) are summarized in Table 6.

BEAMS B-16, B-17, and B-18 ANALYSIS

A three-span continuous beam model of the Beams B-16, B-17, and B-18 is analyzed under dead and live loads. The analysis model is shown in Figures 23 and 24.

Joist dead load reaction on the continuous beam is shown in Figure 25.

Moving load analyses of the continuous beam are conducted under a ladder truck and an engine truck as shown in Figures 26 to 29. The results of these analyses are scaled by the percentages shown in Table 5 and combined.

The shear force and bending moment envelopes are shown in Figures 30 and 31. The maximum shear force, positive bending moment, and negative moment from these envelope diagrams constitute the maximum demand (D) on the continuous beam.

BEAMS B-16, B-17, and B-18 DESIGN REVIEW

The continuous beam shear force and bending moment demand capacity ratios (DCR) are summarized in Table 7.

BEAMS B-7, B-19, B-20, and B-21 ANALYSIS

A four-span model of the Beams B-7, B-19, B-20, and B-21 is analyzed under dead and live loads. The analysis model is shown in Figures 32 and 33.

Joist dead load reaction on the continuous beam is shown in Figure 34.

Moving load analyses of the continuous beam are conducted under a ladder truck and an engine truck similar to those shown in Figures 26 to 29. The results of these analyses are scaled by the percentages shown in Table 5 and combined.

The shear force and bending moment envelopes are shown in Figures 35 and 36. The maximum shear force, positive bending moment, and negative moment from these envelope diagrams constitute the maximum demand (D) on the continuous beam.

BEAMS B-7, B-19, B-20, and B-21 DESIGN REVIEW

The continuous beam shear force and bending moment demand capacity ratios (DCR) are summarized in Table 8.

BEAMS B-7, B-12, B-13, B-14, and B-15 ANALYSIS

A five-span model of the Beams B-7, B-12, B-13, B-14, and B-15 is analyzed under dead and live loads. The analysis model is shown in Figures 37 and 38.

Joist dead load reaction on the continuous beam is shown in Figure 39.

Moving load analyses of the continuous beam are conducted under a ladder truck and an engine truck similar to those shown in Figures 26 to 29. The results of these analyses are scaled by the percentages shown in Table 5 and combined.

The shear force and bending moment envelopes are shown in Figures 40 and 41. The maximum shear force, positive bending moment, and negative moment from these envelope diagrams constitute the maximum demand (D) on the continuous beam.

BEAMS B-7, B-12, B-13, B-14, and B-15 DESIGN REVIEW

The continuous beam shear force and bending moment demand capacity ratios (DCR) are summarized in Table 9.

RESULTS SUMMARY

The joist and beam shear force and bending moment demand capacity ratios (DCR) are summarized in Table 10.

ANALYSIS NOTES

In the joist models, the joist ends are assumed pinned. Considering that the topping is not a reliable composite topping, no strength contribution from topping is assumed. In addition, the topping is assumed incapable of distributing the axle load between joists.

In the current analyses, the ends of beams are assumed fixed against rotation. An alternative pinned assumption will also be considered in the final retrofit design.

In the current analyses, the shear demand is evaluated at the face of the supports. A small reduction in the shear demand will be considered in the the final retrofit design by evaluating shear at a distance equal to effective depth from the face of the support.

In the current analyses two different types of truck on the left and right bays of the fire station are considered. Per information provided by client, the case of two heavy ladder trucks in adjacent bays need not be considered.

Table 1: Material properties

Member			Joist	Beams
Concrete compressive strength	f'_c	psi	4823	4572
Concrete modulus of elasticity	E_c	ksi	3959	3854
Concrete Poisson's ratio	n	---	0.2	0.2
Concrete weight density	g	pcf	111	143
Concrete modulus of rupture	f_r	psi	521	507
Concrete direct tensile strength	f_t	psi	278	270
Reinforcementyield stress	f_y	ksi	40	40

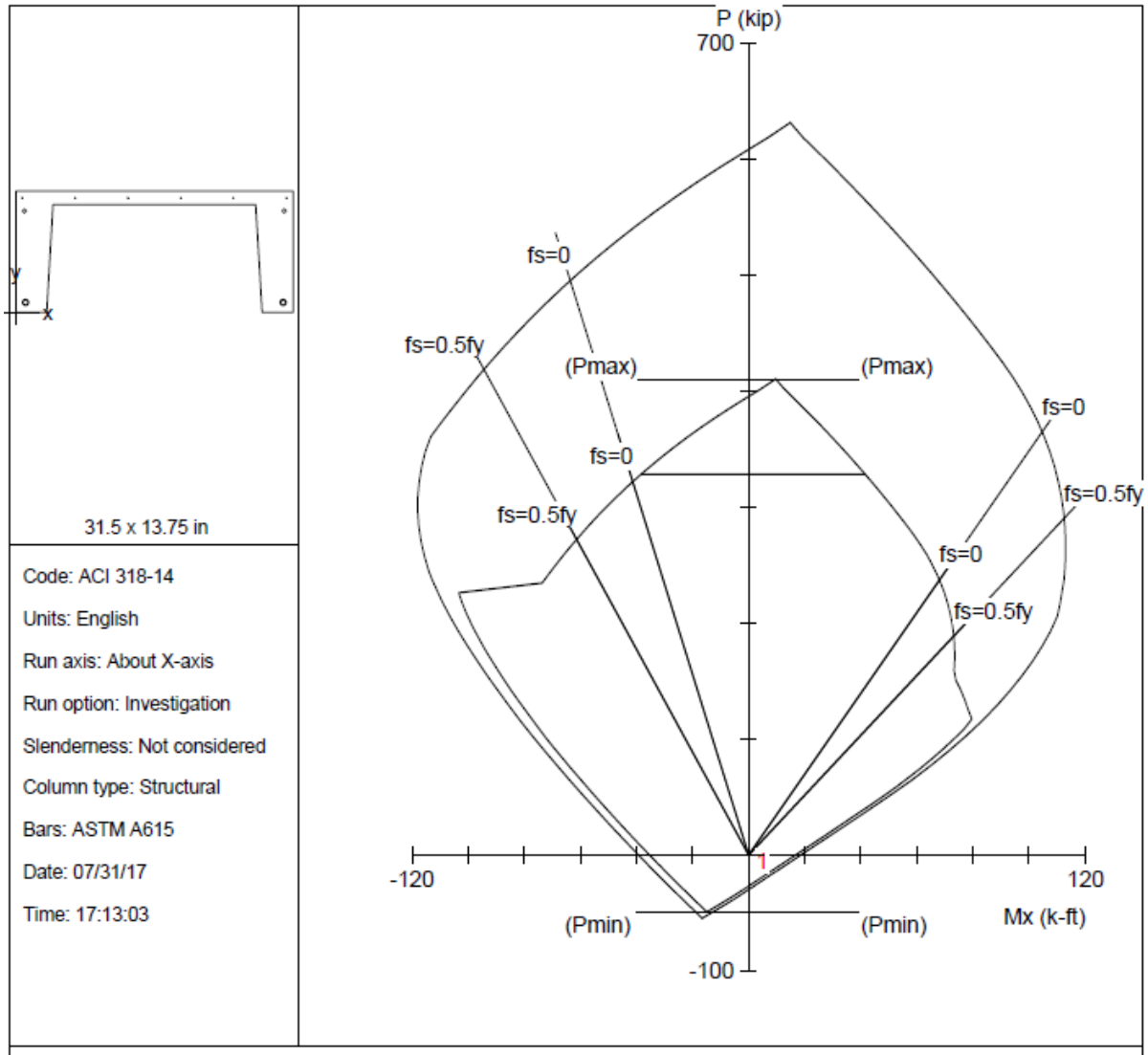

STRUCTUREPOINT - spColumn v5.11 (TM). Licensed to: CTL Group. License ID: 66496-1056230-4-20F7D-2BEED

File: C:\Users\hlotfi\Documents\231701 City of Austin Fire Station PHASE-2\FS 22\3 spColumn\Joist.col

Project: 231701

Column: Joist		Engineer: HRL	
f'c = 4.823 ksi	fy = 40 ksi	Ag = 142.188 in^2	10 bars
Ec = 3959 ksi	Es = 29000 ksi	As = 1.36 in^2	rho = 0.96%
fc = 4.09955 ksi	e_yt = 0.00137931 in/in	Xo = 15.75 in	Ix = 2599.05 in^4
e_u = 0.003 in/in		Yo = 8.54 in	Iy = 22124.8 in^4
Beta1 = 0.80885		Min clear spacing = 1.20 in	Clear cover = N/A
Confinement: Tied			
phi(a) = 0.8, phi(b) = 0.9, phi(c) = 0.65			

Figure 1: Flexural capacity of joist

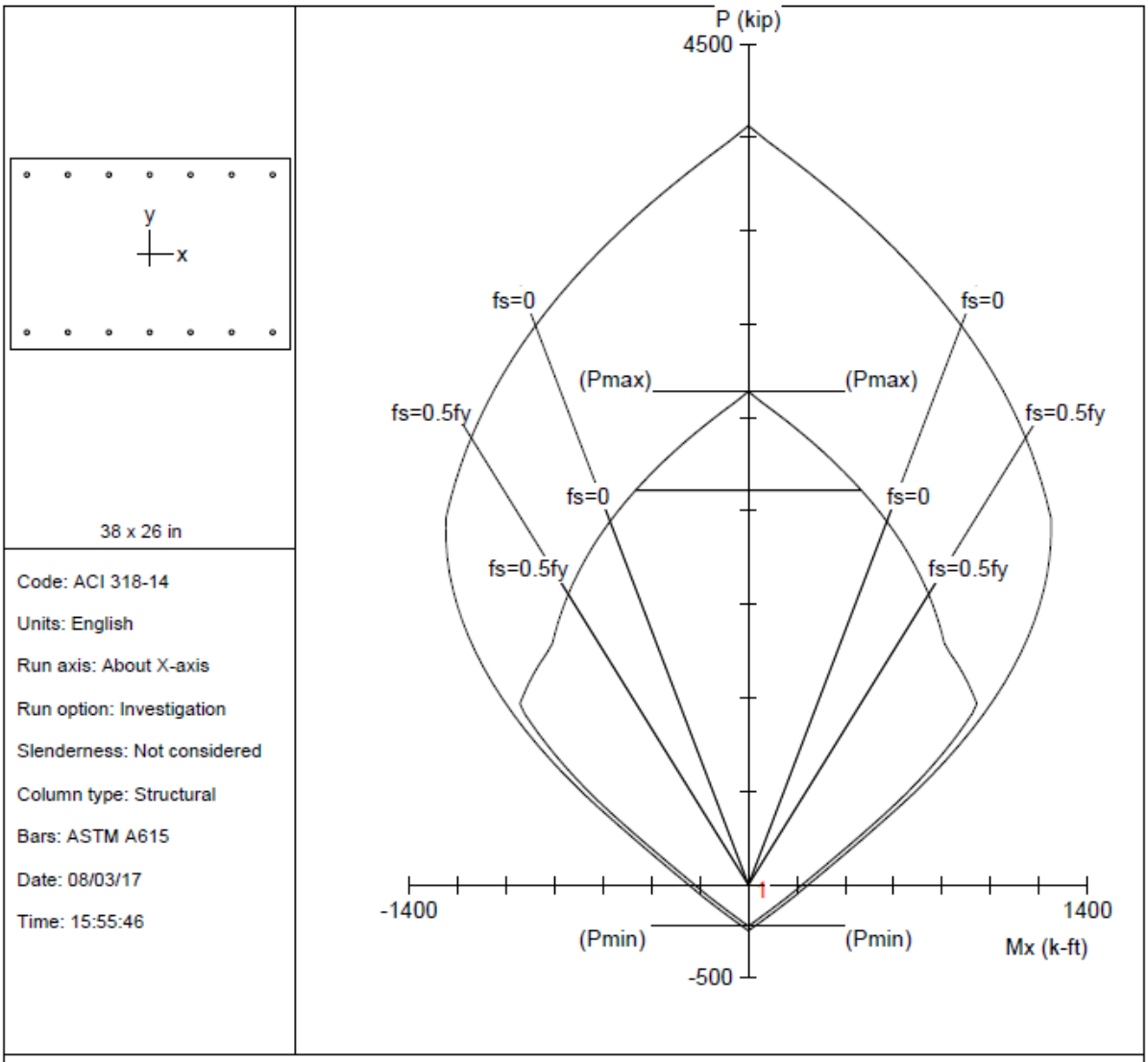

STRUCTUREPOINT - spColumn v5.11 (TM). Licensed to: CTL Group. License ID: 66496-1056230-4-20F7D-2BEED

File: C:\Users\hlotfi\Documents\231701 City of Austin Fire Station PHASE-2\FS 22\Capacity spColumn\Runs\B8.col

Project: FS22

Column: B8		Engineer: HRL	
f'c = 4.572 ksi	fy = 40 ksi	Ag = 988 in^2	14 #6 bars
Ec = 3854 ksi	Es = 29000 ksi	As = 6.16 in^2	rho = 0.62%
fc = 3.8862 ksi	e_yt = 0.00137931 in/in	Xo = 0.00 in	Ix = 55657.3 in^4
e_u = 0.003 in/in		Yo = 0.00 in	Iy = 118889 in^4
Beta1 = 0.8214		Min clear spacing = 4.83 in	Clear cover = 1.88 in

Confinement: Tied

phi(a) = 0.8, phi(b) = 0.9, phi(c) = 0.65

Figure 2: Flexural capacity of Beam B-8

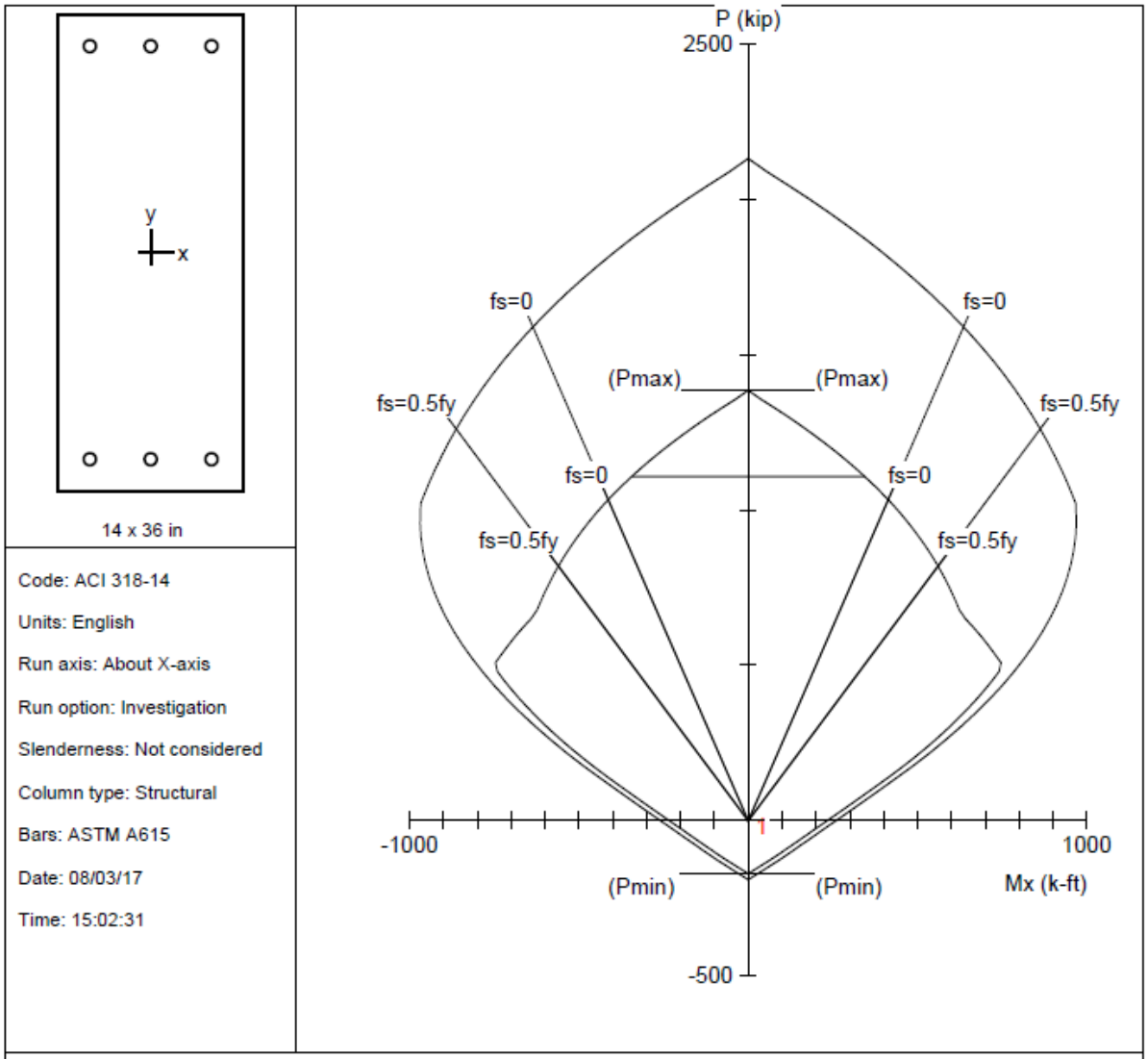

Code: ACI 318-14

Units: English

Run axis: About X-axis

Run option: Investigation

Slenderness: Not considered

Column type: Structural

Bars: ASTM A615

Date: 08/03/17

Time: 15:02:31

STRUCTUREPOINT - spColumn v5.11 (TM). Licensed to: CTL Group. License ID: 66496-1056230-4-20F7D-2BEED

File: C:\Users\hlotfi\Documents\231701 City of Austin Fire Station PHASE-2\FS 22\Capacity spColumn\B3-B7-B12.col

Project: FS22

Column: B3/B7/B12		Engineer: HRL	
f'c = 4.572 ksi	fy = 40 ksi	Ag = 504 in^2	6 #8 bars
Ec = 3854 ksi	Es = 29000 ksi	As = 4.74 in^2	rho = 0.94%
fc = 3.8862 ksi	e_yt = 0.00137931 in/in	Xo = 0.00 in	Ix = 54432 in^4
e_u = 0.003 in/in		Yo = 0.00 in	Iy = 8232 in^4
Beta1 = 0.8214		Min clear spacing = 3.62 in	Clear cover = 1.87 in
Confinement: Tied			
phi(a) = 0.8, phi(b) = 0.9, phi(c) = 0.65			

Figure 3: Flexural capacity of Beams B-3, B-7, and B-12

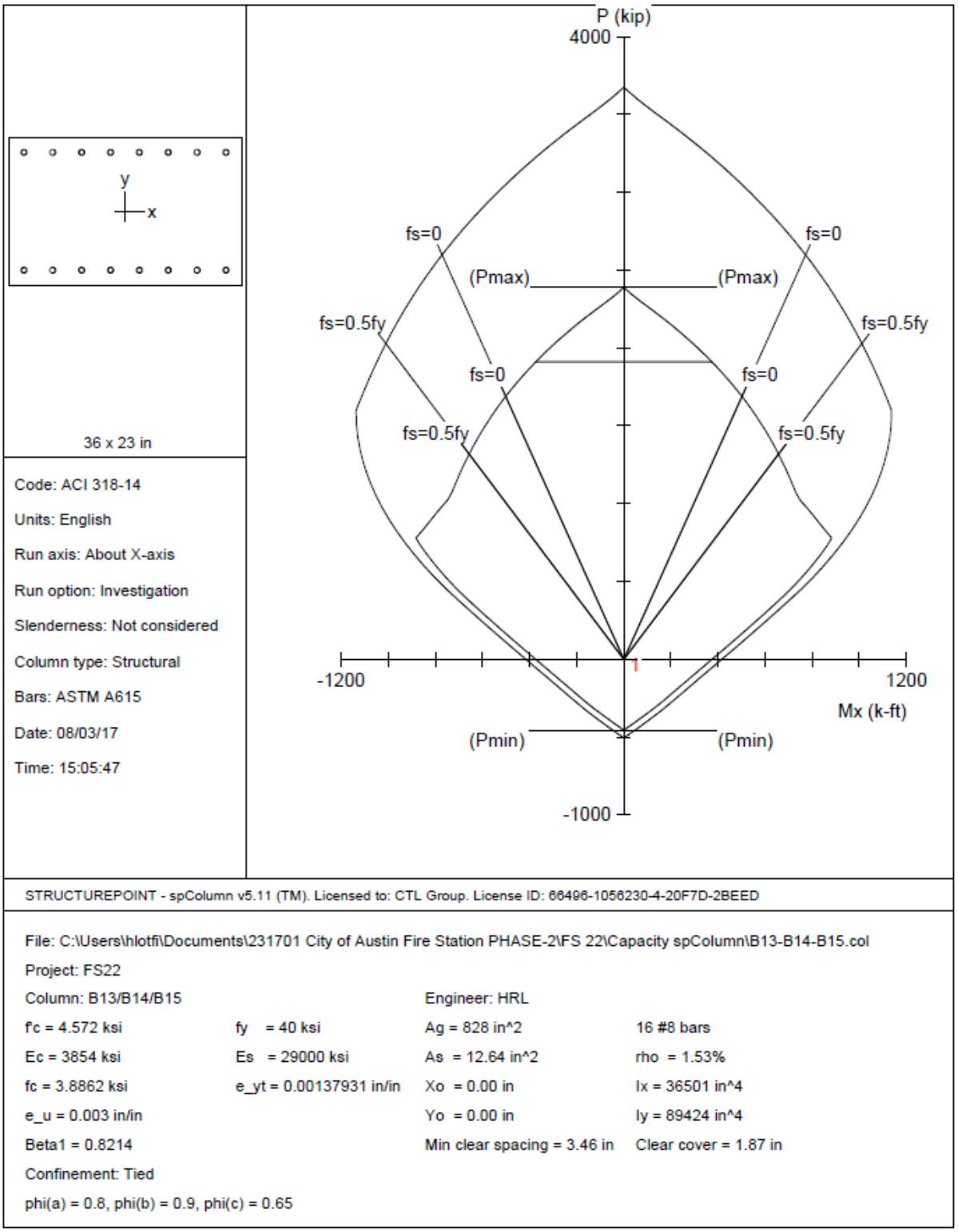

Figure 4: Flexural capacity of Beams B-13, B-14, and B-15

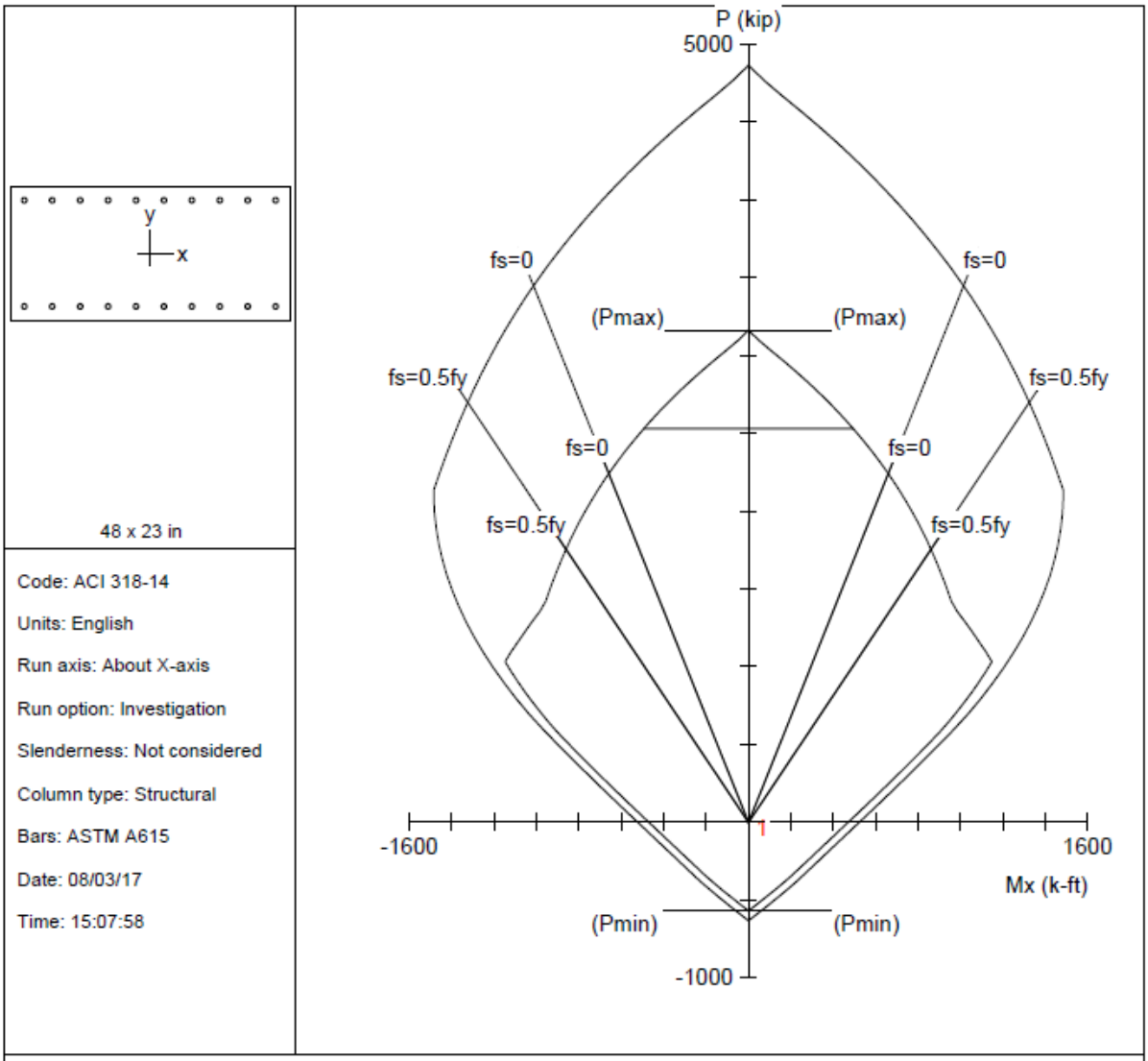

Code: ACI 318-14

Units: English

Run axis: About X-axis

Run option: Investigation

Slenderness: Not considered

Column type: Structural

Bars: ASTM A615

Date: 08/03/17

Time: 15:07:58

STRUCTUREPOINT - spColumn v5.11 (TM). Licensed to: CTL Group. License ID: 66496-1056230-4-20F7D-2BEED

File: C:\Users\hlotfi\Documents\231701 City of Austin Fire Station PHASE-2\FS 22\Capacity spColumn\B16-B17-B18.col

Project: FS22

Column: B16/B17/B18 | Engineer: HRL

f'c = 4.572 ksi	fy = 40 ksi	Ag = 1104 in^2	20 #8 bars
Ec = 3854 ksi	Es = 29000 ksi	As = 15.80 in^2	rho = 1.43%
fc = 3.8862 ksi	e_yt = 0.00137931 in/in	Xo = 0.00 in	Ix = 48668 in^4
e_u = 0.003 in/in		Yo = 0.00 in	Iy = 211968 in^4
Beta1 = 0.8214		Min clear spacing = 3.80 in	Clear cover = 1.87 in

Confinement: Tied

phi(a) = 0.8, phi(b) = 0.9, phi(c) = 0.65

Figure 5: Flexural capacity of Beams B-16, B-17, and B-18

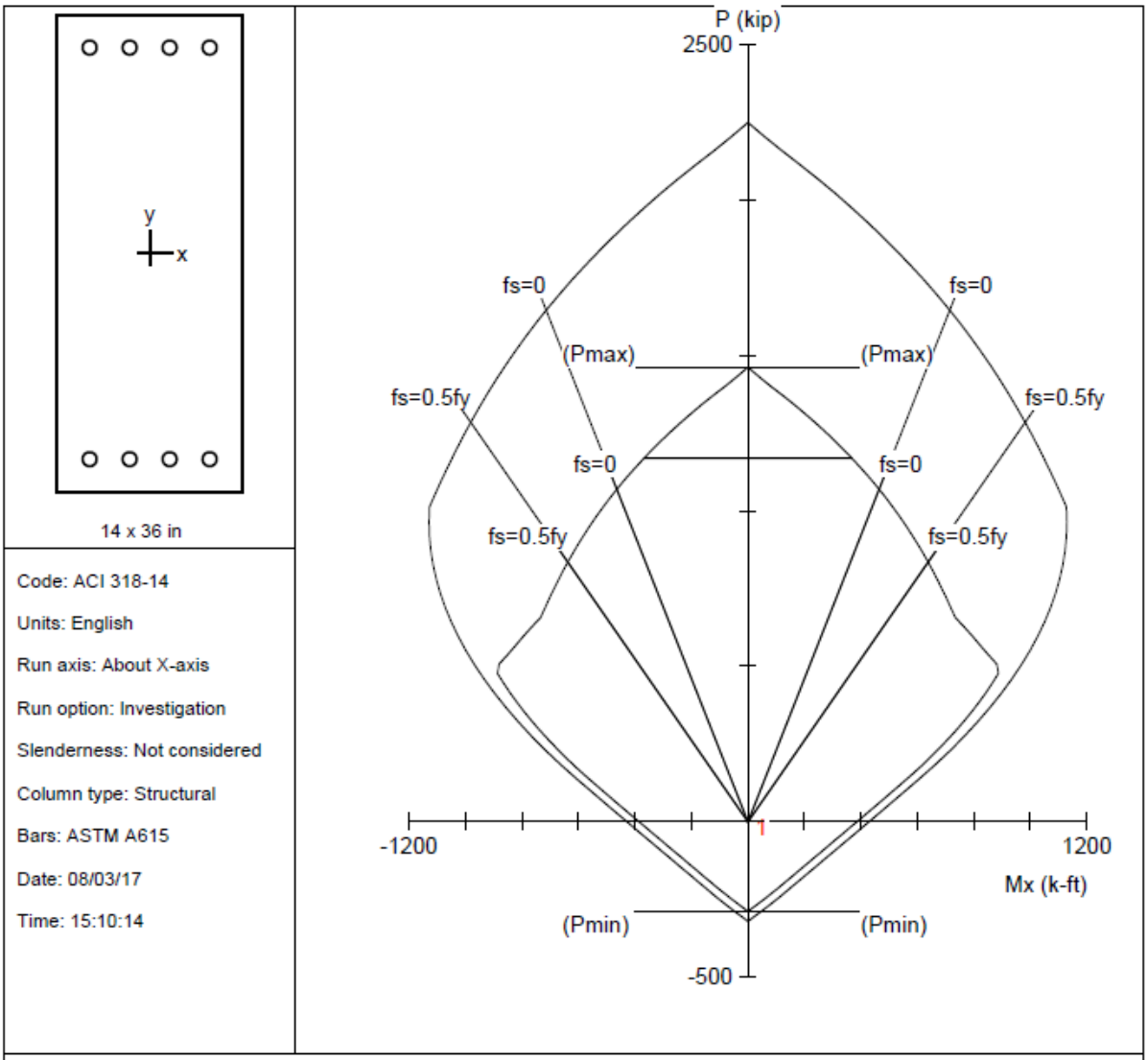

STRUCTUREPOINT - spColumn v5.11 (TM). Licensed to: CTL Group. License ID: 66496-1056230-4-20F7D-2BEED

File: C:\Users\hlotfi\Documents\231701 City of Austin Fire Station PHASE-2\FS 22\Capacity spColumn\B19-B20-B21.col

Project: FS22

Column: B19/B20/B21		Engineer: HRL	
f'c = 4.572 ksi	fy = 40 ksi	Ag = 504 in^2	8 #9 bars
Ec = 3854 ksi	Es = 29000 ksi	As = 8.00 in^2	rho = 1.59%
fc = 3.8862 ksi	e_yt = 0.00137931 in/in	Xo = 0.00 in	Ix = 54432 in^4
e_u = 0.003 in/in		Yo = 0.00 in	Iy = 8232 in^4
Beta1 = 0.8214		Min clear spacing = 1.91 in	Clear cover = 1.87 in
Confinement: Tied			
phi(a) = 0.8, phi(b) = 0.9, phi(c) = 0.65			

Figure 6: Flexural capacity of Beams B-19, B-20, and B-21

Table 2: Shear capacity

Member		Joist	B8	B3-B7-B12	B13-B14-B15	B16-B17-B18	B19-B20-B21	B19-B20-B21	B19-B20-B21
f'c	psi	4,823	4,572	4,572	4,572	4,572	4,572	4,572	4,572
l	---	0.75	1	1	1	1	1	1	1
b	in	7.75	38	14	36	48	14	14	14
d	in	12.625	23.75	33.63	20.63	20.63	33.56	33.56	33.56
f	---	0.75	0.75	0.75	0.75	0.75	0.75	0.75	0.75
Vc	kips/ft	10.2	122.0	63.7	100.4	133.9	63.5	63.5	63.5
f Vc	kips/ft	7.6	91.5	47.7	75.3	100.4	47.7	47.7	47.7
Stirrups		---	#3@18	#3@18	#3@18	2#3@18	#3@4	#3@8	#3@18
Av	in2		0.22	0.22	0.22	0.44	0.22	0.22	0.22
fy	psi		40	40	40	40	40	40	40
s	in		18	18	18	18	4	8	18
Vs	kip		11.6	16.4	10.1	20.2	73.8	36.9	16.4
f Vs	kip		8.7	12.3	7.6	15.1	55.4	27.7	12.3
f Vn	kip	7.6	100.2	60.1	82.9	115.5	103.0	75.3	60.0

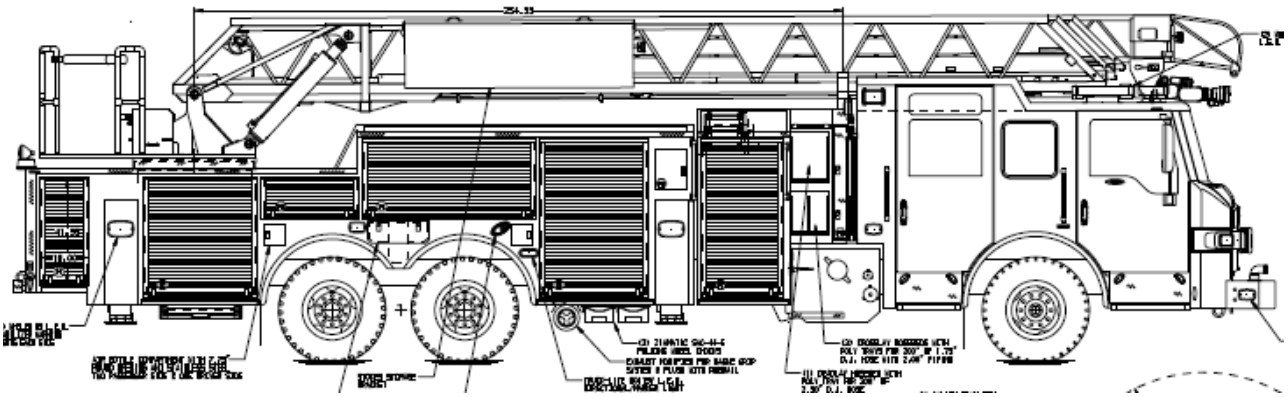

Front Axle	Rear Axle	Total
lb	lb	lb
22,800	54,000	76,800

Wheel footprint per CalTrans 2004 Section 3.3	Axle	Axle Weight	Wheel Weight	Area	Length	Width	Pressure
		(lb)	(lb)	(in^2)	(in)	(in)	(psi)
	Front	22,800	11400	114	6.8	16.9	100
	Rear	54,000	13500	135	7.3	18.4	100

Wheel footprint per AASHTO 2010 Section 3.6.1.2.5	Axle	Axle Weight	Wheel Weight	Area	Length	Width	Pressure	g	IM
		(lb)	(lb)	(in^2)	(in)	(in)	(psi)		
	Front	22,800	11400	91.2	6.4	14.3	125	1	0
	Rear	54,000	13500	108	6.4	16.9	125	1	0

Standard truck wheel footprint per AASHTO 2010 Section	Length	Width
	a	b
	(in)	(in)
	10.0	20.0

Figure 7: Ladder truck

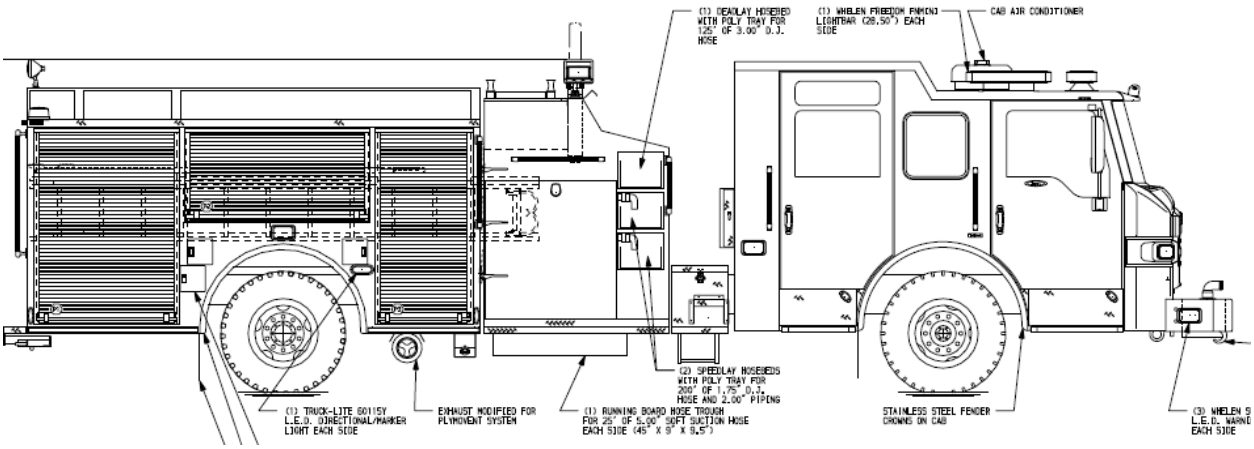

Front Axle	Rear Axle	Total
lb	lb	lb
19,500	27,000	46,500

	Axle	Axle Weight	Wheel Weight	Area	Length	Width	Pressure
Wheel footprint		(lb)	(lb)	(in^2)	(in)	(in)	(psi)
per CalTrans	Front	19,500	9750	97.5	6.2	15.6	100
2004 Section 3.3	Rear	27,000	13500	135	7.3	18.4	100

Wheel footprint	Axle	Axle Weight	Wheel Weight	Area	Length	Width	Pressure	g	IM
per AASHTO		(lb)	(lb)	(in^2)	(in)	(in)	(psi)		
2010 Section	Front	19,500	9750	78	6.4	12.2	125	1	0
3.6.1.2.5	Rear	27,000	13500	108	6.4	16.9	125	1	0

Standard truck	Length	Width
wheel footprint	a	b
per AASHTO	(in)	(in)
2010 Section	10.0	20.0

Figure 8: Engine truck

Figure 9: Model of long joist

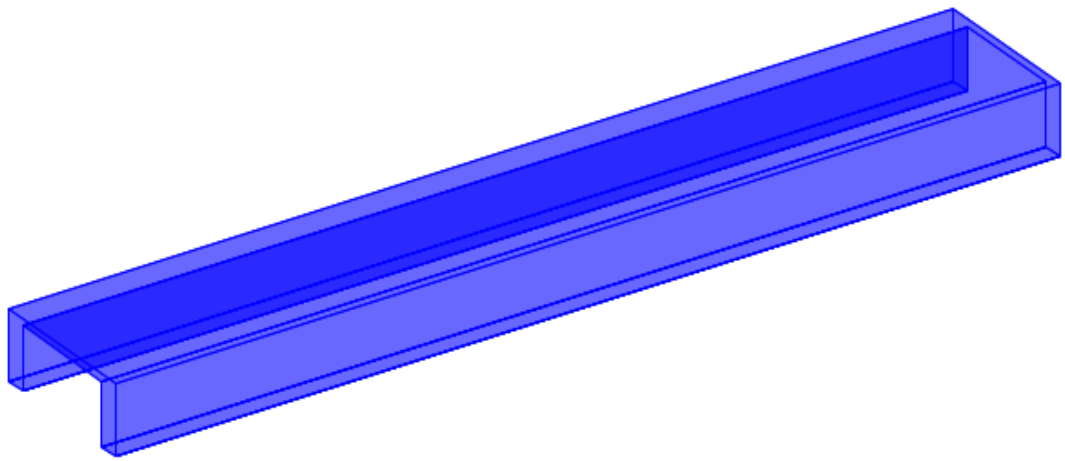

Figure 10: Model of long joist showing member cross section

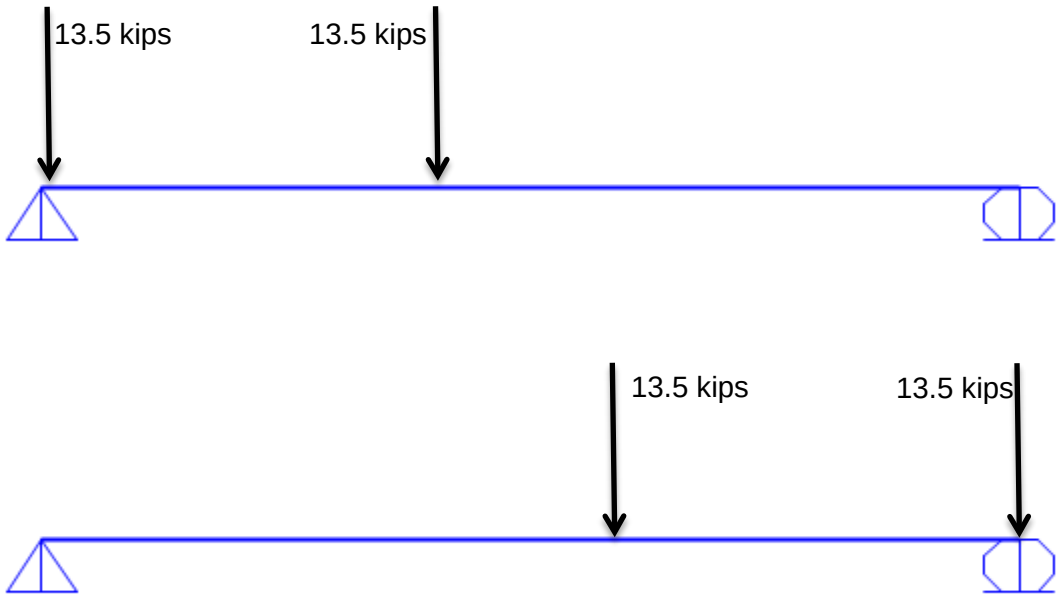

Figure 11: 27-kip axle at extreme positions in the transverse direction along the long joist

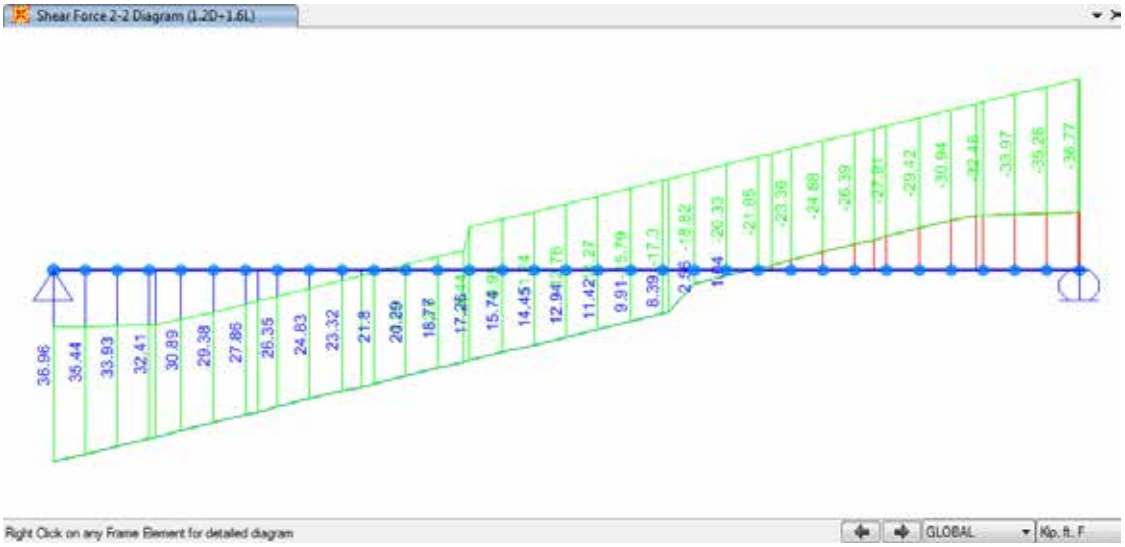

Figure 12: Long joist shear envelope due to factored self-weight plus factored 27-kip axle

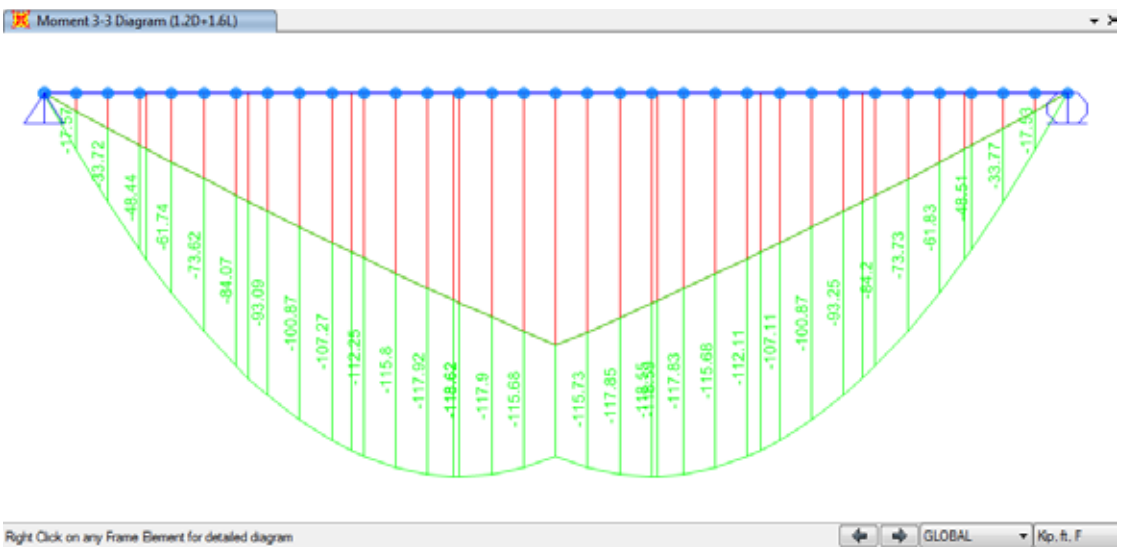

Figure 13: Long joist moment envelope due to factored self-weight plus factored 27-kip axle

Table 3: Long joist shear force and bending moment demand capacity ratios (DCR)

	Vu	f Vn	DCR-v	Mu+ve	f Mn+ve	DCR-M+ve	Mu-ve	f Mn-ve	DCR-M-ve
	kip	kip	---	ft-kip	kip	---	ft-kip	kip	---
15.83 ft long Joist	37.0	7.6	**4.83**	118.6	35.4	**3.35**	0.0	16.7	**0.00**

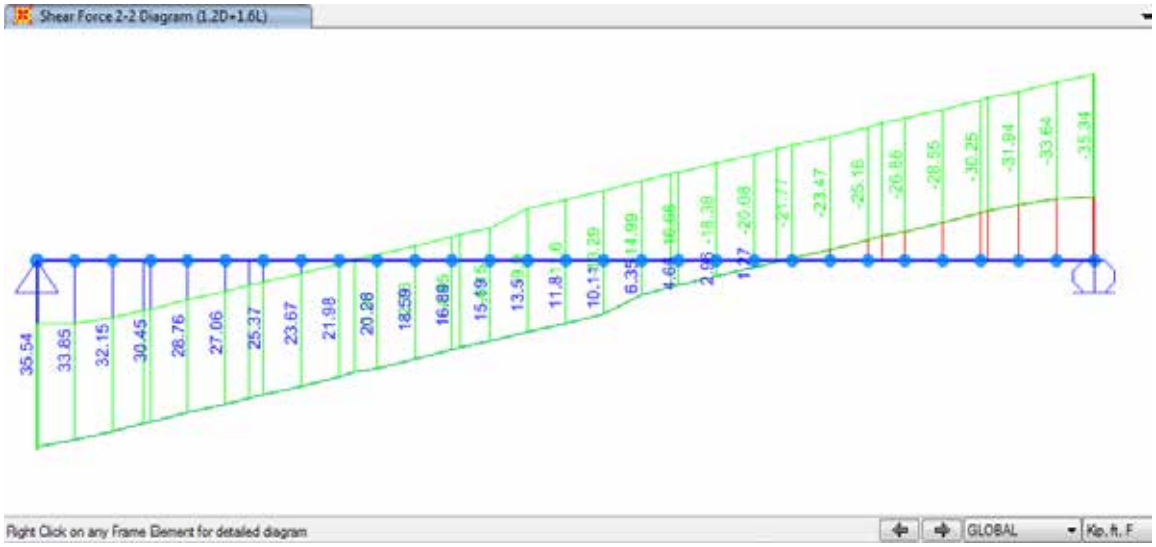

Figure 14: Short joist shear envelope due to factored self-weight plus factored 27-kip axle

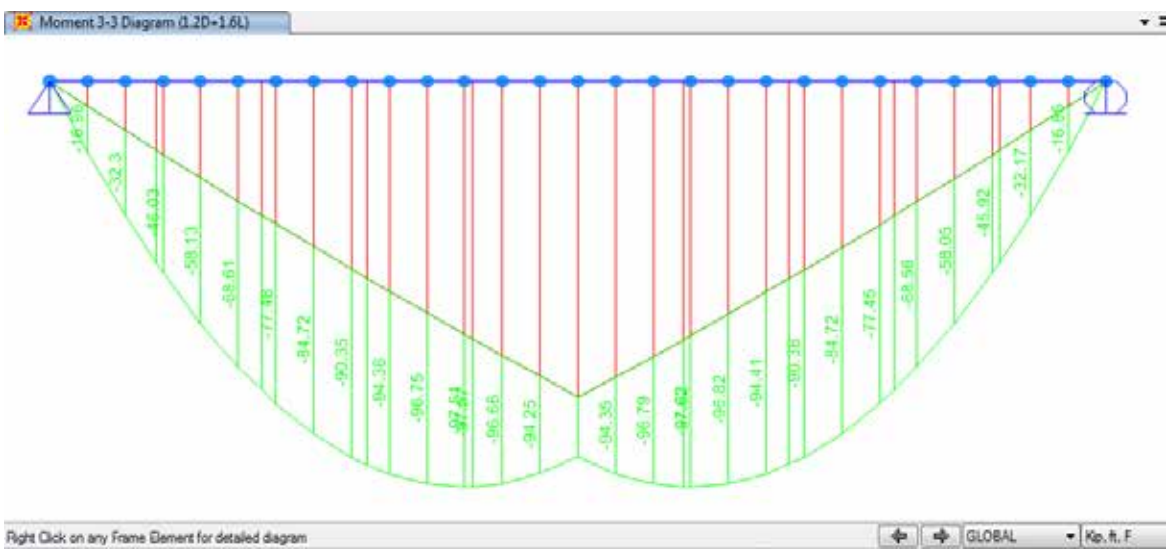

Figure 15: Short joist moment envelope due to factored self-weight plus factored 27-kip axle

Table 4: Short joist shear force and bending moment demand capacity ratios (DCR)

	Vu	f Vn	DCR-v	Mu+ve	f Mn+ve	DCR-M+ve	Mu-ve	f Mn-ve	DCR-M-ve
	kip	kip	---	ft-kip	kip	---	ft-kip	kip	---
14.00 ft long Joist	35.5	7.6	**4.65**	97.6	35.4	**2.76**	0.0	16.7	**0.00**

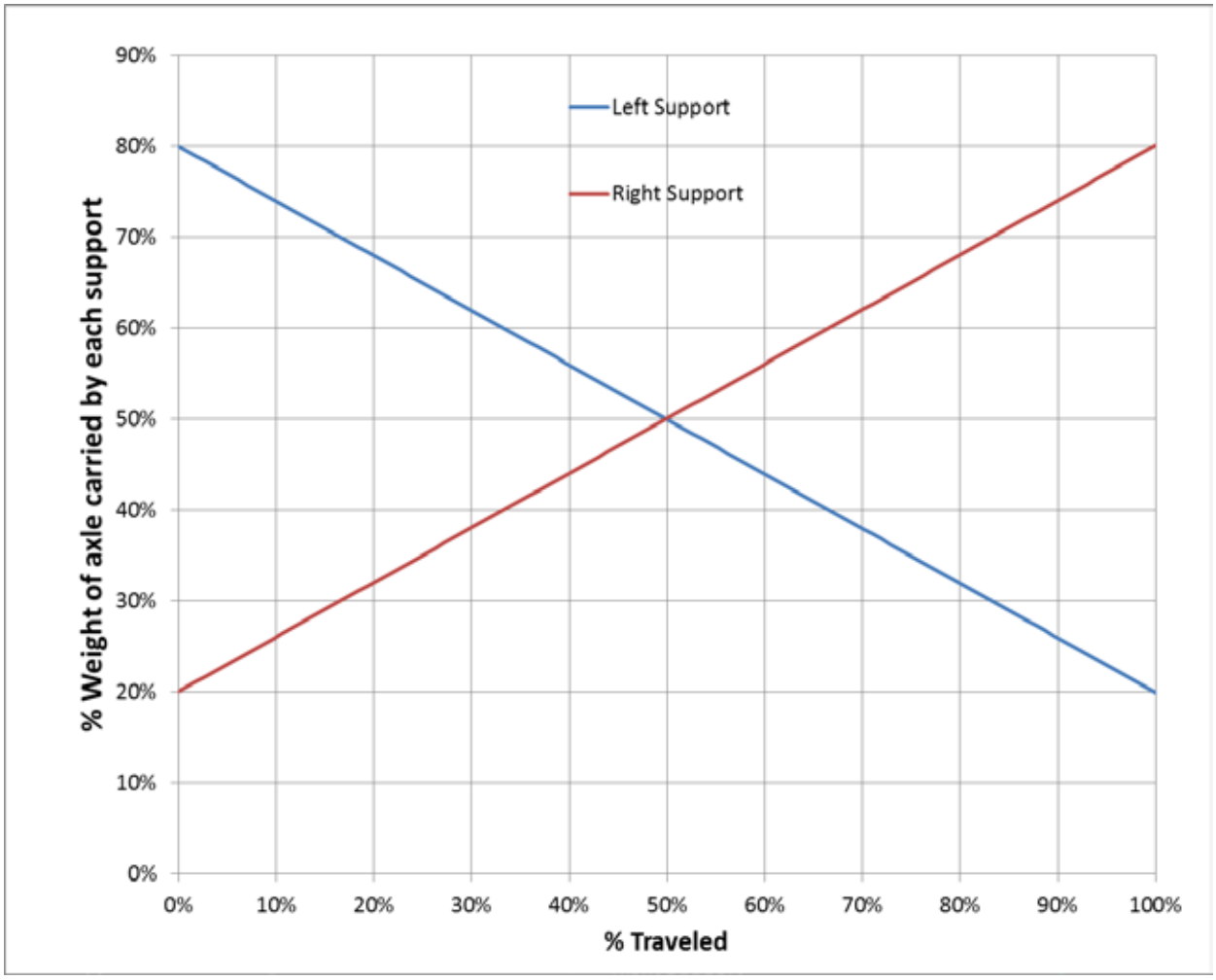

Figure 16: Long joist reaction envelope due to 27-kip axle

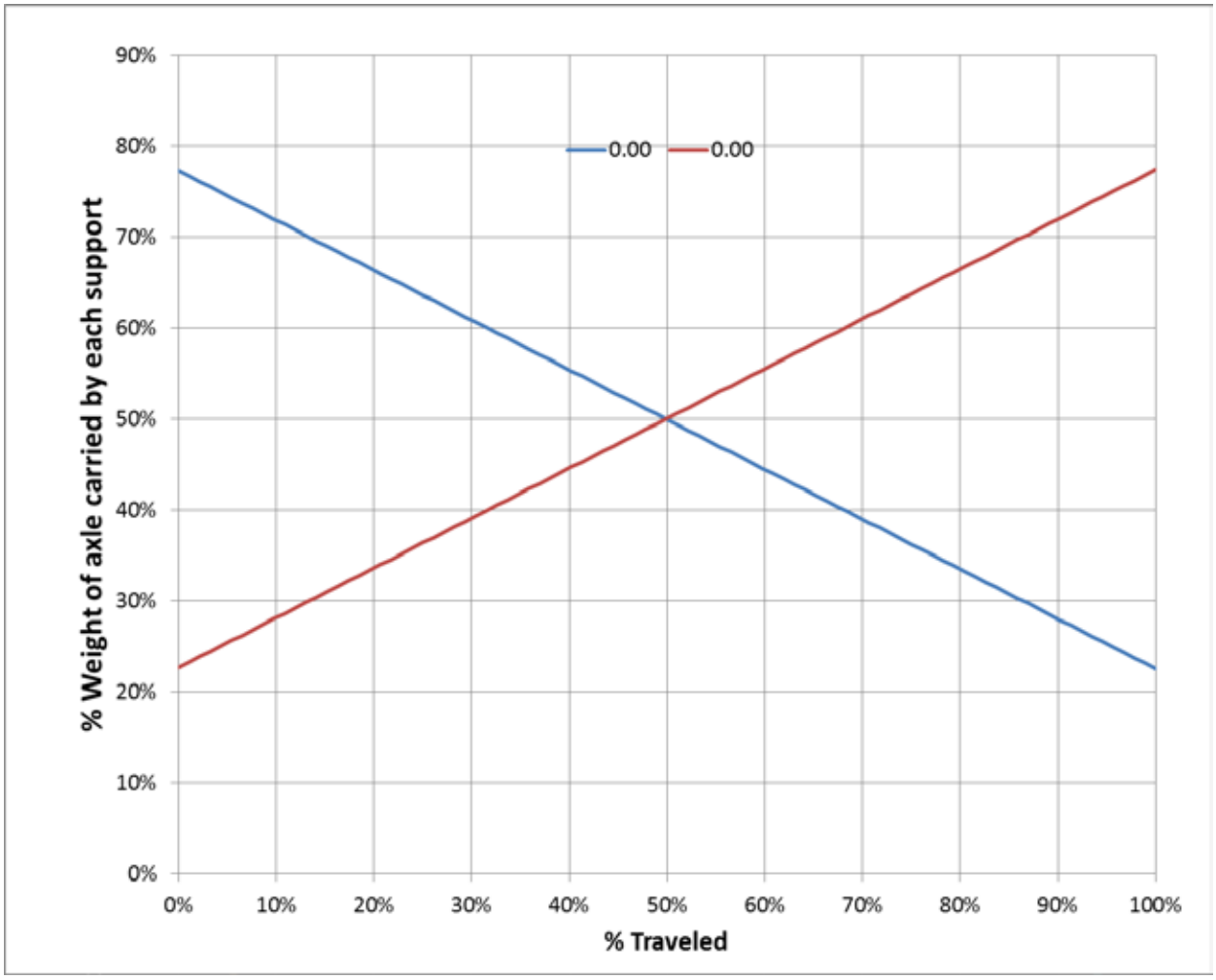

Figure 17: Short joist reaction envelope due to 27-kip axle

Table 5: Percentage of the axle load carried by each support

	Reaction
From long joist	80%
From short joist	77%

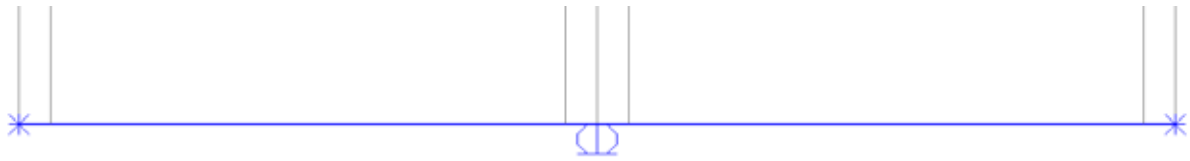

Figure 18: Model of Beam B-8

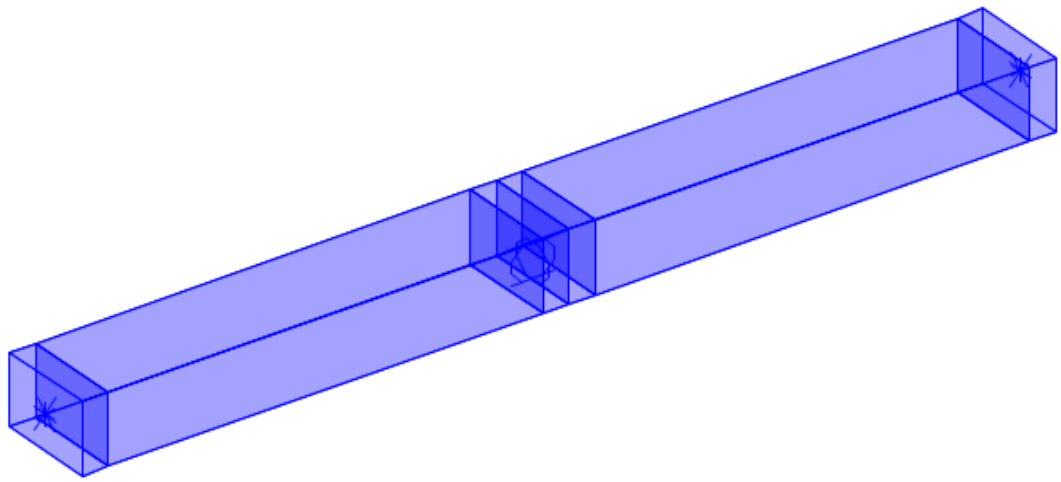

Figure 19: Model of Beam B-8 showing member cross section

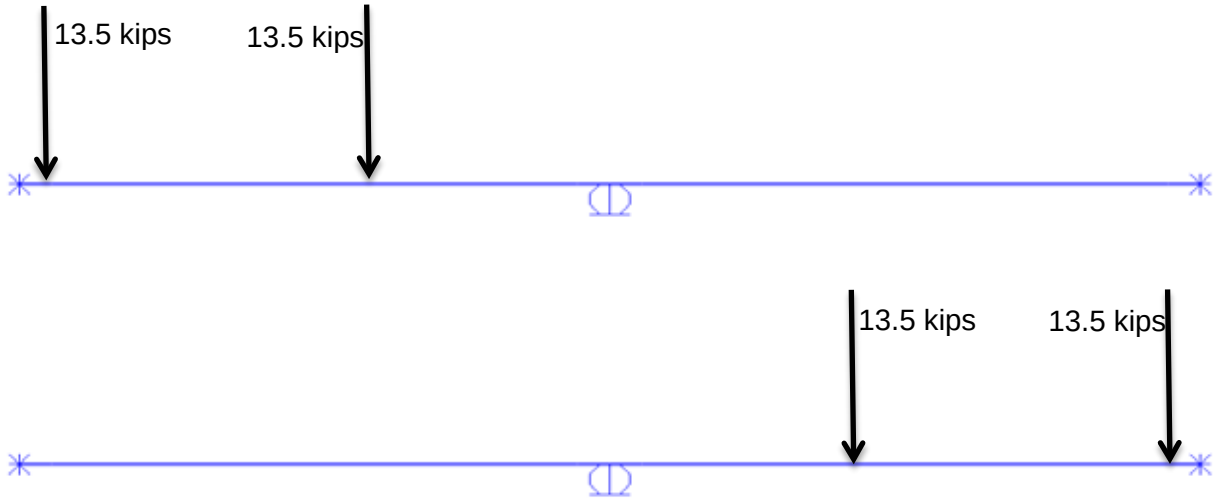

Figure 20: 27-kip axle on left and right spans positioned in the transverse direction along Beam B-8

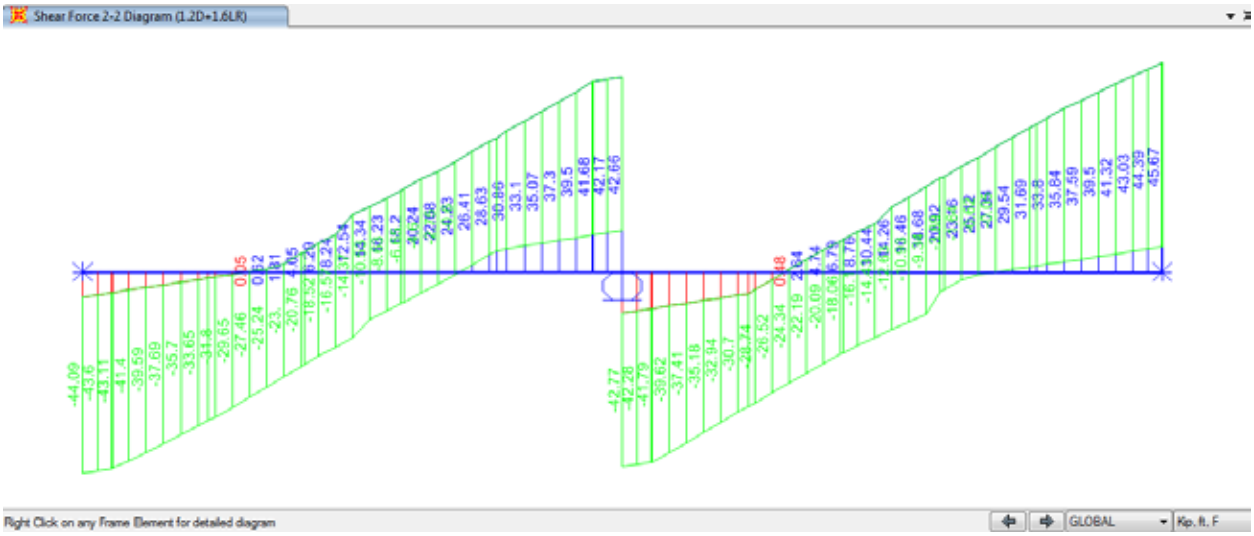

Figure 21: Shear envelope due to factored self-weight plus factored 27-kip axle

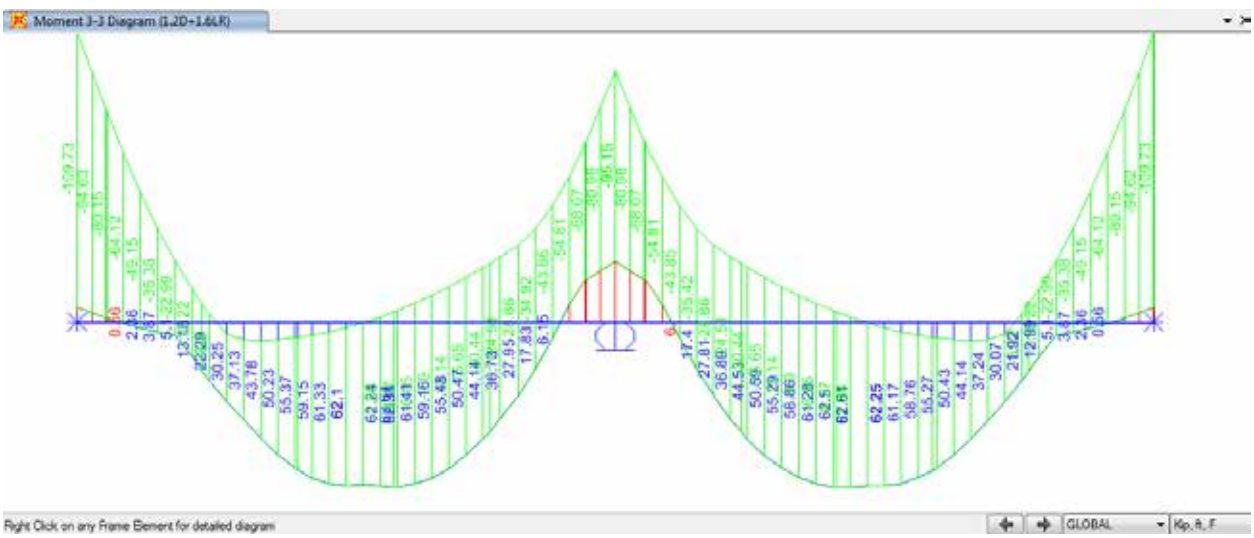

Figure 22: Moment envelope due to factored self-weight plus factored 27-kip axle

Table 6: Beam B-8 shear force and bending moment demand capacity ratios (DCR)

	Vu	f Vn	DCR-v	Mu+ve	f Mn+ve	DCR-M+ve	Mu-ve	f Mn-ve	DCR-M-ve
	kip	kip	---	ft-kip	kip	---	ft-kip	kip	---
Beam B-8	45.7	100.2	**0.46**	62.9	222.7	**0.28**	109.7	222.7	**0.49**

Figure 23: Continuous model of Beams B-16, B-17, and B-18

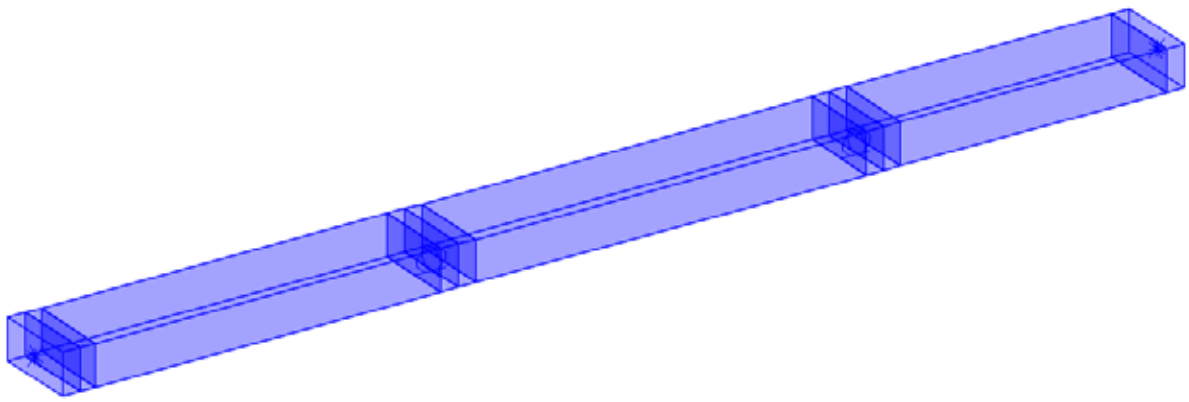

Figure 24: Model of Beams B-16, B-17, and B-18 showing member cross section

Figure 25: Joist dead load reaction on Beams B-16, B-17, and B-18 (lb/ft)

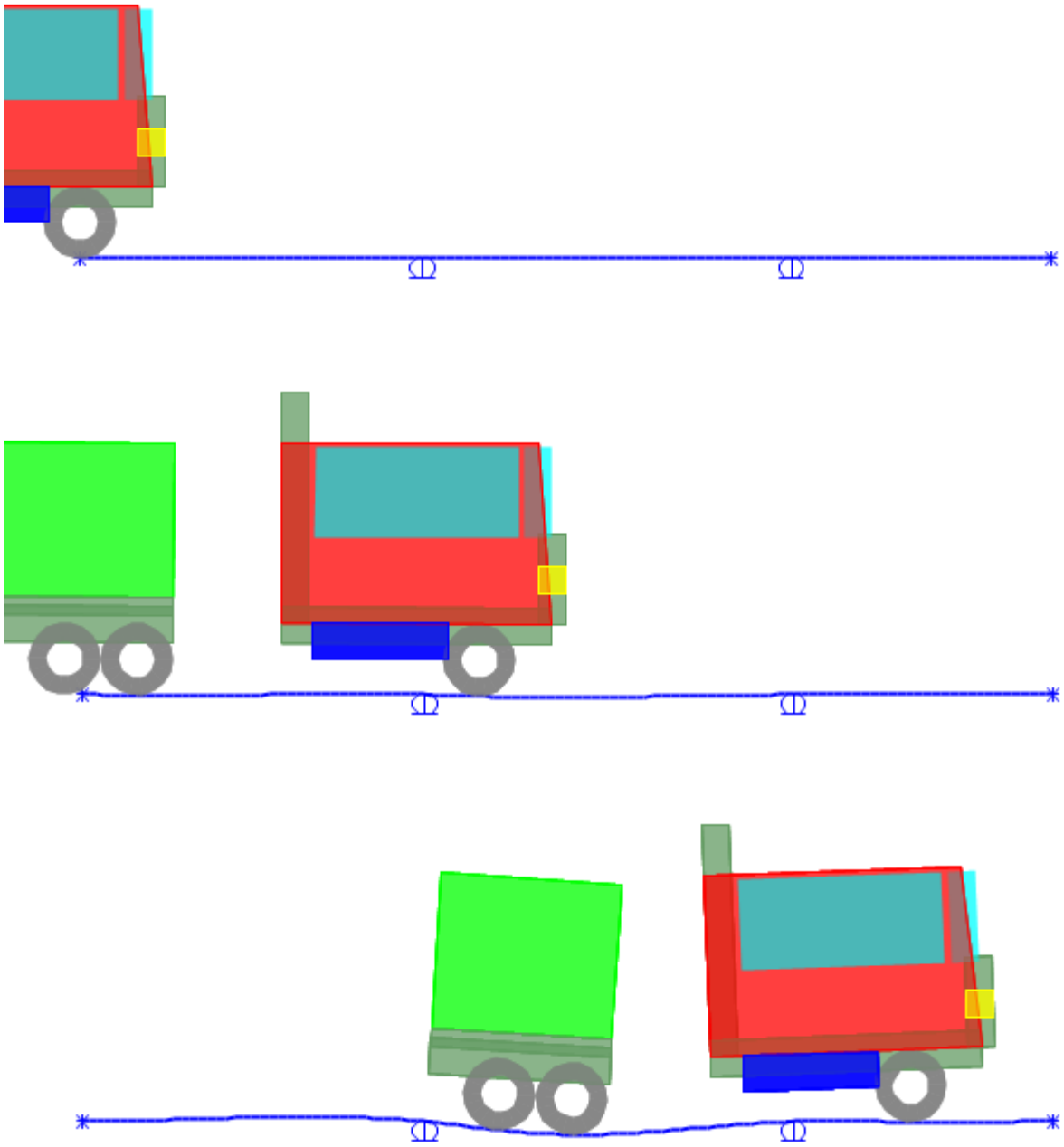

Figure 26: Ladder truck moving inside

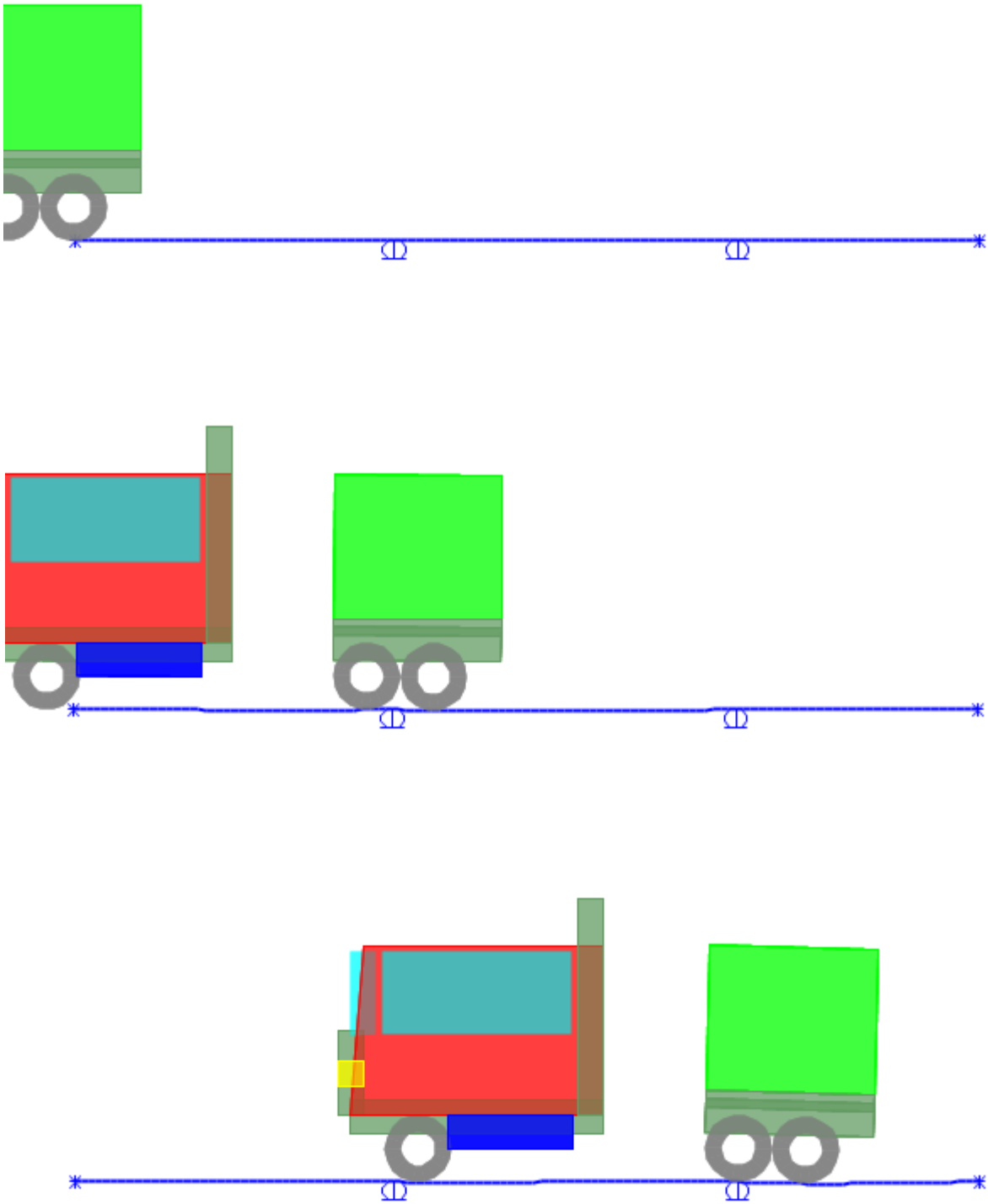

Figure 27: Ladder truck backing up

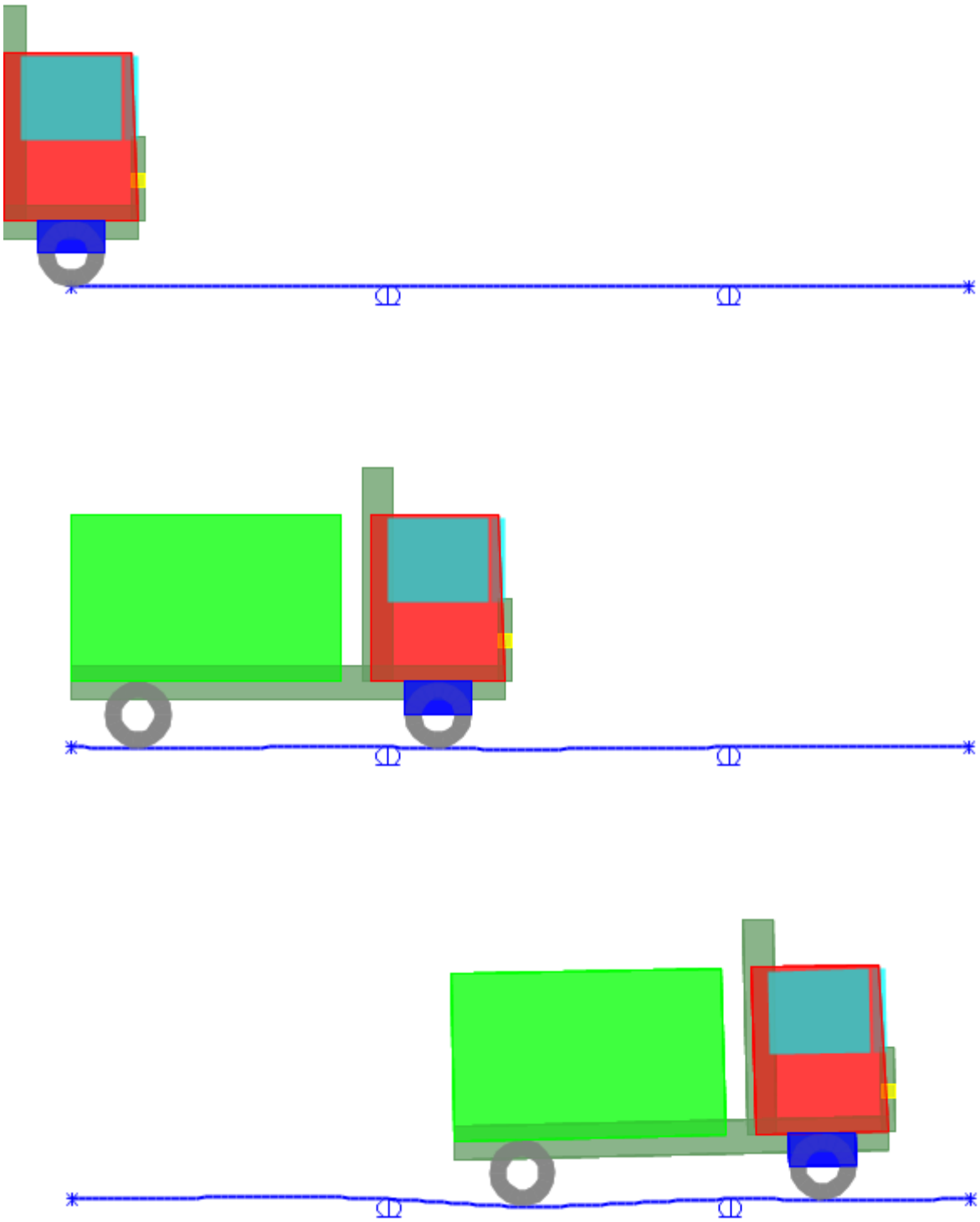

Figure 28: Engine truck moving inside

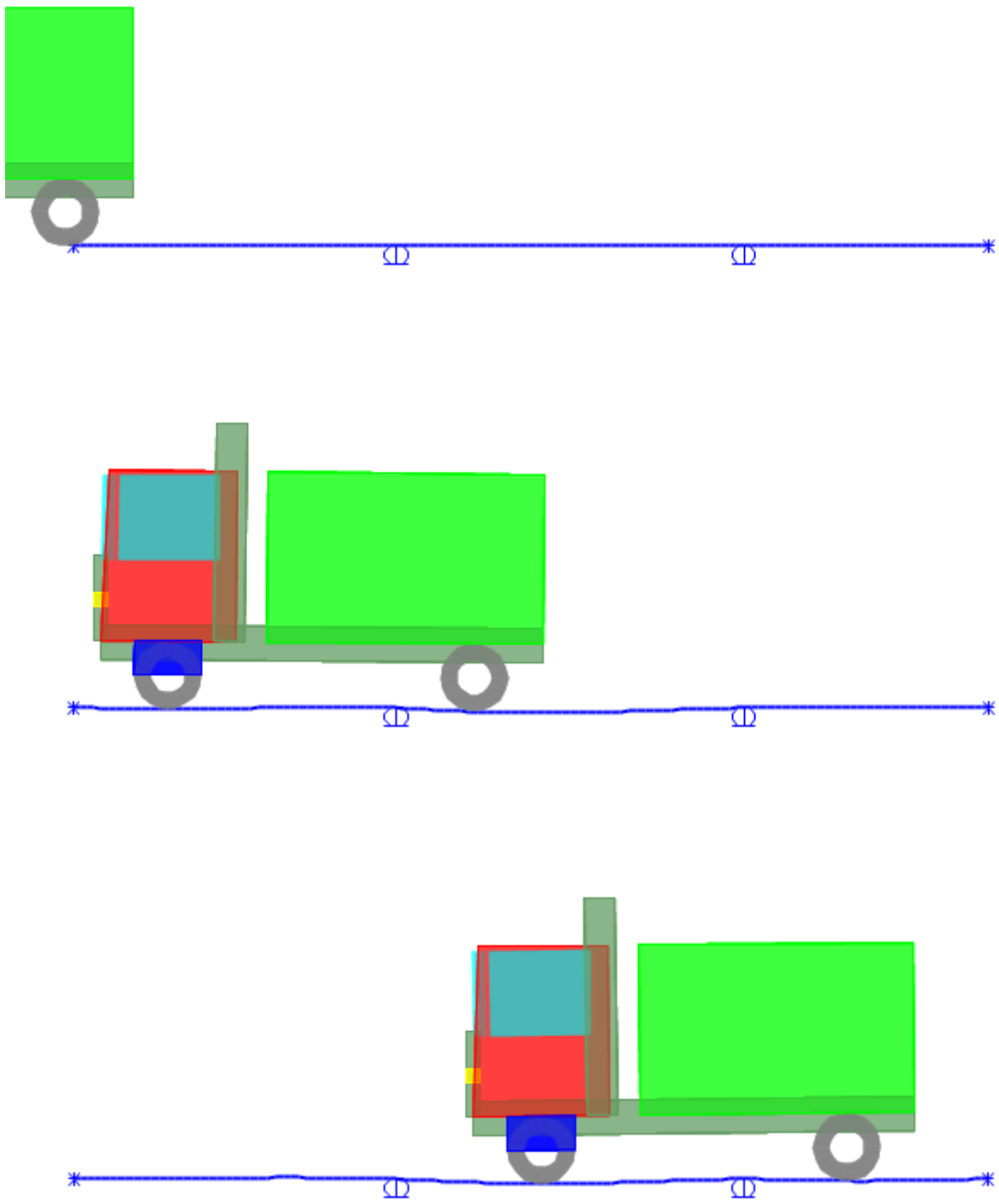

Figure 29: Engine truck backing up

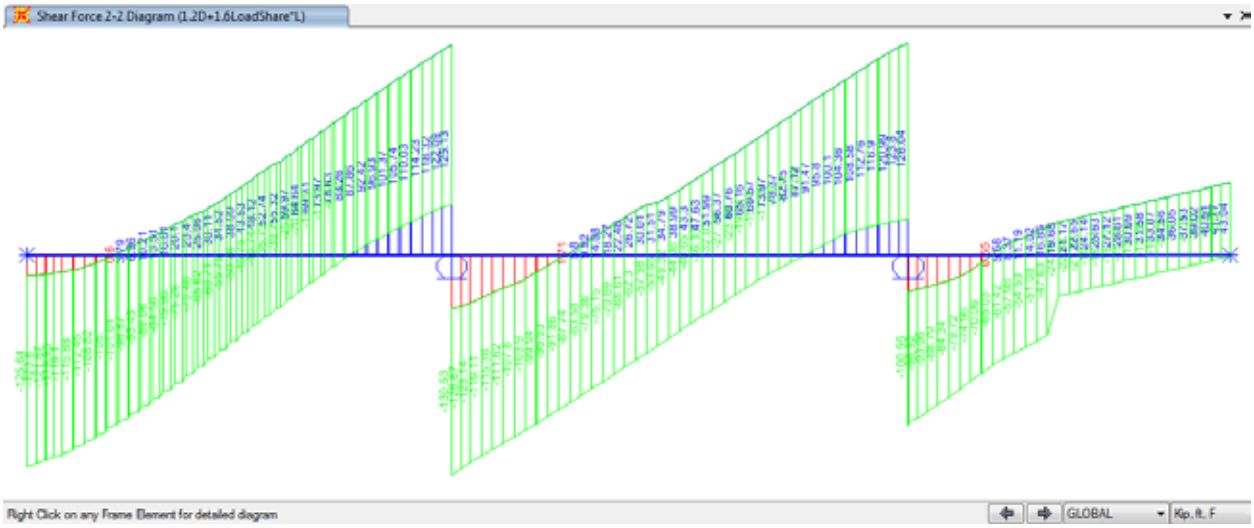

Figure 30: Shear envelope due to factored dead loads plus factored truck loads

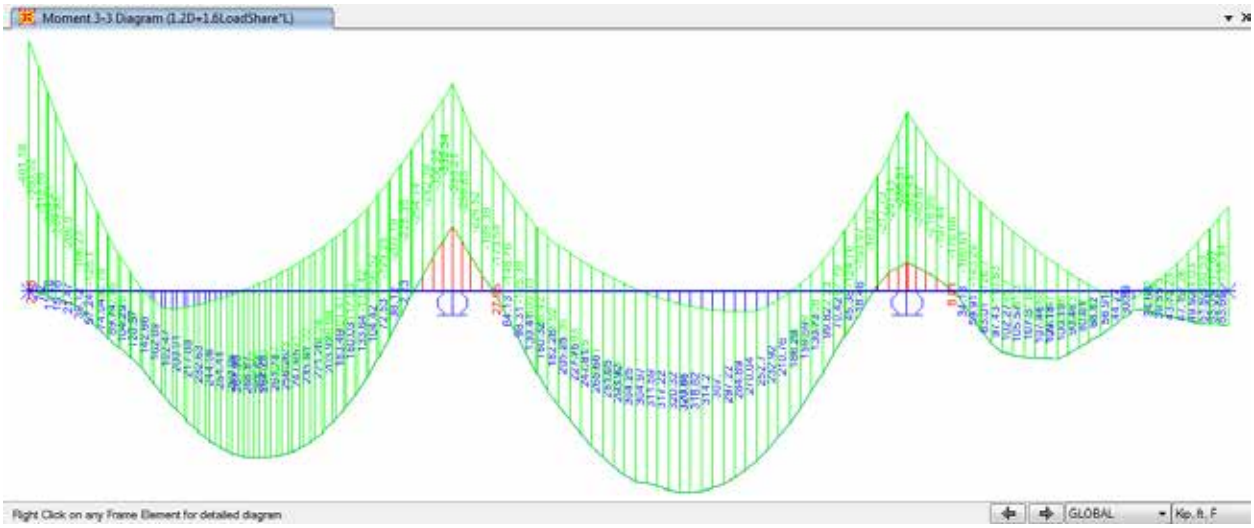

Figure 31: Moment envelope due to factored dead loads plus factored truck loads

Table 7: Continuous beam shear force and bending moment demand capacity ratios (DCR)

	Vu	f Vn	DCR-v	Mu+ve	f Mn+ve	DCR-M+ve	Mu-ve	f Mn-ve	DCR-M-ve
	kip	kip	---	ft-kip	kip	---	ft-kip	kip	---
Beams B16, B17, B18	130.5	115.5	**1.13**	320.9	470.2	**0.68**	401.2	470.2	**0.85**

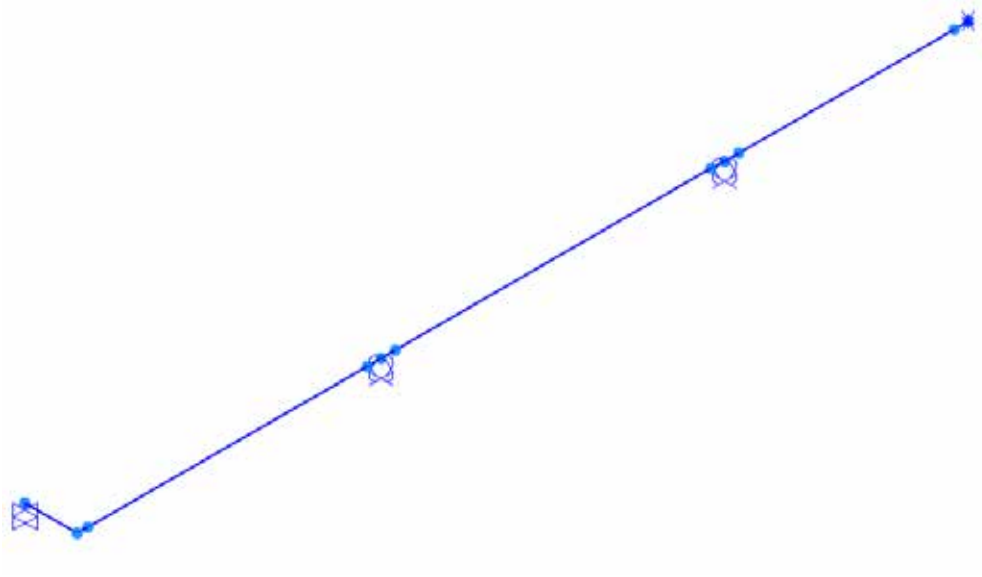

Figure 32: Continuous model of Beams B-7, B-19, B-20, and B-21

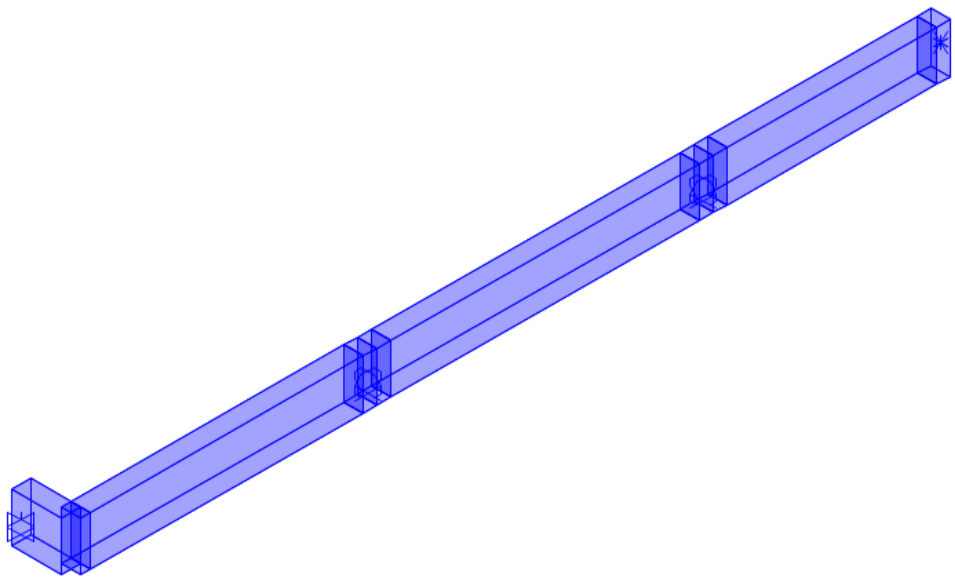

Figure 33: Model of Beams B-7, B-19, B-20, and B-21 showing member cross section

Figure 34: Joist dead load reaction on Beams B-7, B-19, B-20, and B-21 (lb/ft)

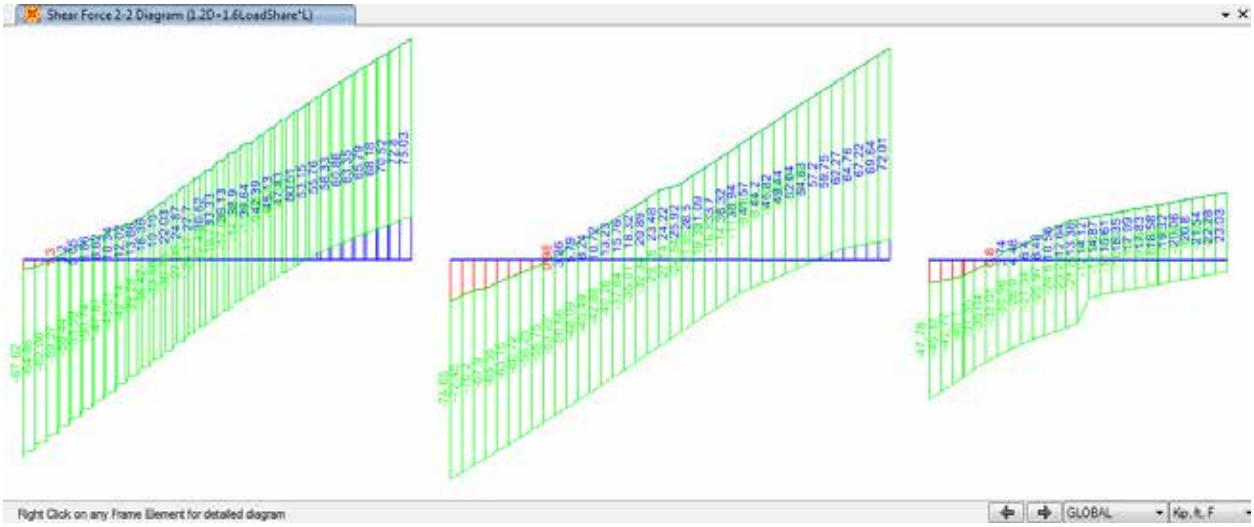

Figure 35: Shear envelope due to factored dead loads plus factored truck loads

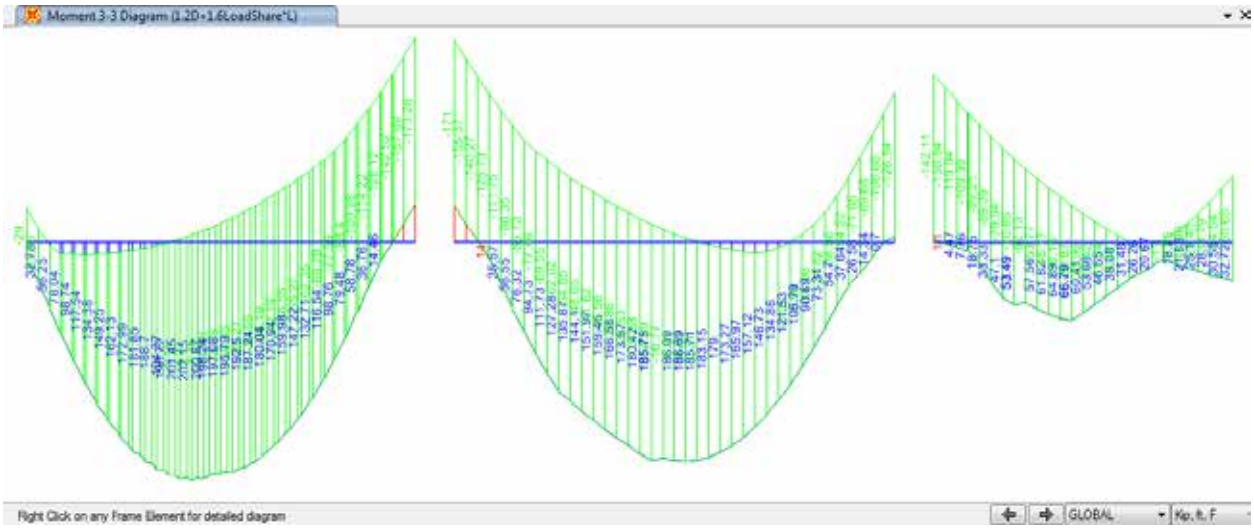

Figure 36: Moment envelope due to factored dead loads plus factored truck loads

Table 8: Continuous beam shear force and bending moment demand capacity ratios (DCR)

	Vu	f Vn	DCR-v	Mu+ve	f Mn+ve	DCR-M+ve	Mu-ve	f Mn-ve	DCR-M-ve
	kip	kip	---	ft-kip	kip	---	ft-kip	kip	---
Beams B-19, B-20, B-21	60.8	60.0	**1.01**	202.2	385.5	**0.52**	173.3	385.5	**0.45**
Beam B-7	71.8	60.1	**1.20**	0.0	233.2	**0.00**	218.6	233.2	**0.94**

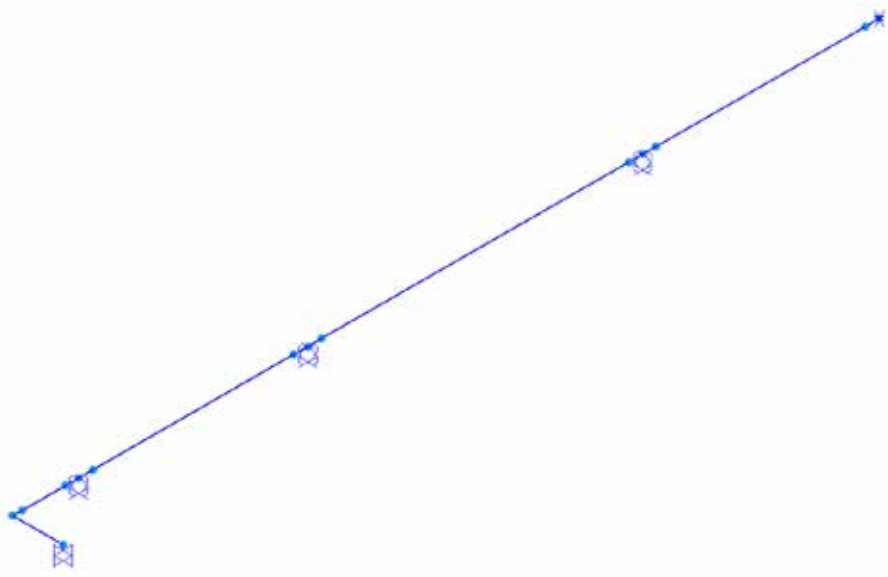

Figure 37: Continuous model of Beams B-7, B-12, B-13, B-14, and B-15

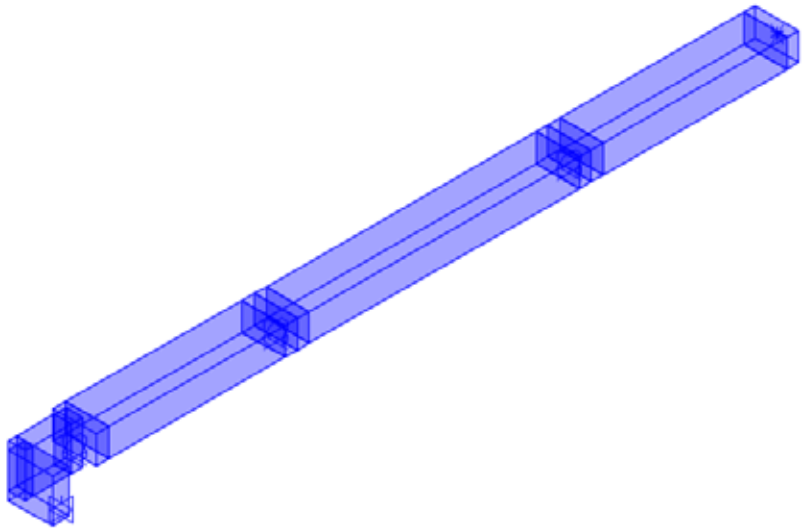

Figure 38: Model of Beams B-7, B-12, B-13, B-14, and B-15 showing member cross section

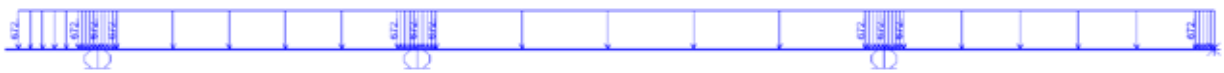

Figure 39: Joist reaction on Beams B-7, B-12, B-13, B-14, and B-15 (lb/ft)

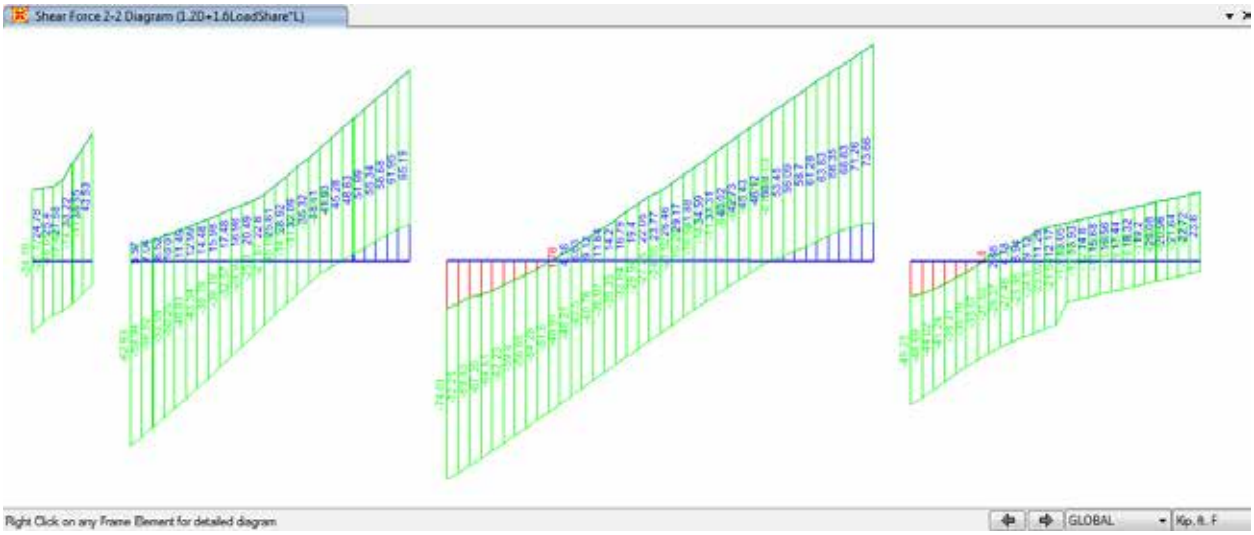

Figure 40: Shear envelope due to factored dead loads plus factored truck loads

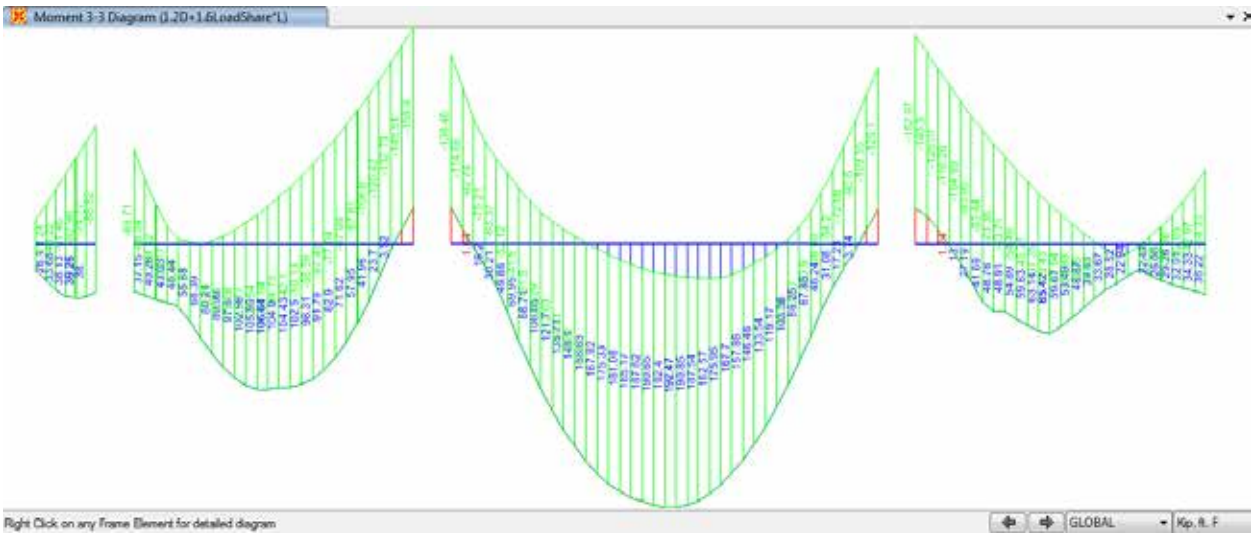

Figure 41: Moment envelope due to factored dead loads plus factored truck loads

Table 9: Continuous beam shear force and bending moment demand capacity ratios (DCR)

	Vu	f Vn	DCR-v	Mu+ve	f Mn+ve	DCR-M+ve	Mu-ve	f Mn-ve	DCR-M-ve
	kip	kip	---	ft-kip	kip	---	ft-kip	kip	---
Beams B-13, B-14, B-15	74.6	82.9	**0.90**	192.5	374.4	**0.51**	158.9	374.4	**0.42**
Beam B-12	43.5	60.1	**0.72**	39.3	233.2	**0.17**	86.8	233.2	**0.37**
Beam B-7	29.3	60.1	**0.49**	70.6	233.2	**0.30**	87.4	233.2	**0.37**

Table 10: Demand Capacity Ratios (DCR)

	Vu	f Vn	DCR-v	Mu+ve	f Mn+ve	DCR-M+ve	Mu-ve	f Mn-ve	DCR-M-ve
	kip	kip	---	ft-kip	kip	---	ft-kip	kip	---
15.83 ft long Joist	37.0	7.6	**4.83**	118.6	35.4	**3.35**	0.0	16.7	**0.00**
14.00 ft long Joist	35.5	7.6	**4.65**	97.6	35.4	**2.76**	0.0	16.7	**0.00**
Beam B-8	45.7	100.2	**0.46**	62.9	222.7	**0.28**	109.7	222.7	**0.49**
Beams B16, B17, B18	130.5	115.5	**1.13**	320.9	470.2	**0.68**	401.2	470.2	**0.85**
Beams B-19, B-20, B-21	60.8	60.0	**1.01**	202.2	385.5	**0.52**	173.3	385.5	**0.45**
& Beam B-7	71.8	60.1	**1.20**	0.0	233.2	**0.00**	218.6	233.2	**0.94**
Beams B-13, B-14, B-15	74.6	82.9	**0.90**	192.5	374.4	**0.51**	158.9	374.4	**0.42**
& Beam B-12	43.5	60.1	**0.72**	39.3	233.2	**0.17**	86.8	233.2	**0.37**
& Beam B-7	29.3	60.1	**0.49**	70.6	233.2	**0.30**	87.4	233.2	**0.37**

City of Austin

Founded by Congress, Republic of Texas, 1839
Public Works Department, P.O. Box 1088, Austin, TX 78767-8839
Quality Management Division, 105 Riverside Drive, Suite 100, Austin, TX 78704

Alejandro Wolniewitz
Facilities Process Manager
Austin Fire Department
4201 Ed Bluestein Blvd
Austin, Texas 78721

DATE: September 1, 2017

RE: Forensic Investigation of the Existing Elevated Foundations for Fire Station 3 and Fire Station 22 to Determine If The Existing Elevated Foundations Could Safely Support New Vehicular Loads

Mr. Wolniewitz,

This letter is in regards to a forensic investigation that was performed on the existing elevated foundations at Fire Station 3 and Fire Station 22. The purpose of these forensic investigations were to determine if the existing foundations could safely support the higher loads of the new fire trucks. The forensic investigation was conducted by CTL Group, phase 2 report submitted August 31, 2017, to determine if the existing elevated foundations could safely support the new vehicular loads at Fire Station 3 and Fire Station 22.

The findings of both investigations indicate that the existing elevated foundations for Fire Station 3 and Fire Station 22 are not capable of safely supporting the higher loads of the new fire trucks. The following are the recommendations that were presented in the report from CTL Group with concerns/comments:

- Fire Station 3
  - Remove large portions of the existing foundation and replace with a new foundation that is designed to support the new loads.
    - Concerns/Comments: This is costly due to accessing and demolishing the existing foundation without damaging the remaining structure. There is a high risk associated with this recommendation.
  - Replacing the entire bay area.
    - Concerns/Comments: Initial cost could be higher by performing selective demolition to Fire Station 3 by removing the existing bay area and designing a foundation for the new required loads (and anticipated higher loads in the future) and rebuilding the bays. The new bay design will address the current new vehicular loads of the Fire Station and could be planned and implemented in a manner to fulfill the future needs of the Austin Fire Department.
  - Fill the crawlspace with flowable fill material.
    - Concerns/Comments: Fire Station is located in an area that has expansive soils, that is why the existing foundation system is suspended. Additional geotechnical investigation will be required to determine if adding the additional load of the flowable material will cause the soil to settle and create a void between the bottom of the existing foundation and the flowable fill. The soils can than rebound pushing upward against the bottom of the existing foundation causing it to move upward.

- Fire Station 22
  - The CTL Group's recommendations for Fire Station 22 are similar to the recommendations given for Fire Station 3. Please reference the above recommendations with concerns.

The forensic investigations that were performed by CTL Group of the existing elevated foundations of Fire Station 22 and Fire Station 3 revealed that the existing suspended foundations cannot safely support the vehicular loading from the new fire trucks. It is recommended that selective demolition be performed and replace the entire bays of Fire Station 3 and Fire Station 22. The new bays could be designed to accommodate the new vehicular loading requirements of the Fire Stations and anticipated future needs of the Austin Fire Department.

Please feel free to contact me if you have any questions.

Thanks

Karim Helmi, P.E.
City Structural Engineer - Quality Management Division
Public Works Department
City of Austin
Phone: (512) 974-6539

GEOTECHNICAL ENGINEERING STUDY
FIRE STATION #3 AND #22 BAY REPLACEMENT
201 W. 30TH STREET / 5309 EAST RIVERSIDE DRIVE
AUSTIN, TEXAS

KLEINFELDER PROJECT NO. 20190836.001A

October 24, 2018

Copyright 2018 Kleinfelder
All Rights Reserved

ONLY THE CLIENT OR ITS DESIGNATED REPRESENTATIVES MAY USE THIS DOCUMENT AND ONLY FOR THE SPECIFIC PROJECT FOR WHICH THIS REPORT WAS PREPARED.

© 2018 Kleinfelder
www.kleinfelder.com

1826 Kramer Lane, Suite M, Austin, TX. 78758 p | 512.926.6650 f | 512.833.5058

A Report Prepared for:

Mr. Alejandro Wolniewitz – Facilities Process Manager
Ms. Tica Chitrarachis – Rotation List Manager
City of Austin Fire Department
4201 Ed. Bluestein Boulevard
Austin, Texas 78721

Geotechnical Engineering Study
Fire Station #3 and #22 Bay Replacement
201 W. 30th Street / 5309 East Riverside Drive
Austin, Texas

Prepared by:

Benjamin Baugh, EIT
Staff Professional

Orlando Boscan, PE
Project Manager

KLEINFELDER, INC
1826 Kramer Lane, Suite M
Austin, Texas 78758
Phone: 512.926.6650
Fax: 512.833.5058

October 24, 2018
Kleinfelder Project No.: 20190836.001A

© 2018 Kleinfelder

KLEINFELDER
Bright People. Right Solutions.

October 24, 2018
Project No.: 20190836.001A

Mr. Alejandro Wolniewitz – Facilities Process Manager
Ms. Tica Chitrarachis – Rotation List Manager
City of Austin Fire Department
4201 Ed. Bluestein Boulevard
Austin, Texas 78721

Subject: **Geotechnical Engineering Study**
Fire Station #3 and #22 Bay Replacement
201 W. 30th Street / 5309 East Riverside Drive
Austin, Texas

Dear Mr. Wolniewitz:

Kleinfelder has completed the authorized subsurface exploration and geotechnical engineering study for the above-referenced project. The purpose of the geotechnical study was to explore and evaluate the subsurface conditions at Fire Station #3 and #22 and develop geotechnical design and construction considerations. The attached Kleinfelder report contains a description of the findings of our field explorations and laboratory testing program, our engineering interpretation of the results with respect to the design of building foundation and potential construction issues for the planned project.

As an additional service, we would be pleased to review the portions of the plans and specifications that were developed based on information from our Geotechnical Study. We can also provide construction phase services such as materials engineering, materials, testing, and foundation installation observation.

We appreciate the opportunity to be of service to you on this project. If we can be of additional assistance, please contact us at 512.926.6650.

Sincerely,

KLEINFELDER, INC.
Texas Registered Engineering Firm F-16438

STATE OF TEXAS
ORLANDO L. BOSCAN
104906
LICENSED
PROFESSIONAL ENGINEER

Ben Baugh
Benjamin Baugh, EIT
Staff Professional

Orlando Boscan
Orlando Boscan, PE
Project Manager

© 2018 Kleinfelder

KLEINFELDER 1826 Kramer Lane, Suite M, Austin, TX. 78758 p | 512.926.6650 f | 512.833.5058

TABLE OF CONTENTS

PAGE

1 INTRODUCTION 1
1.1 PROJECT DESCRIPTION 1
1.2 PURPOSE AND SCOPE 1

2 FIELD EXPLORATION AND LABORATORY TESTING 3
2.1 FIELD EXPLORATION 3
2.2 LABORATORY TESTING 5
2.2.1 Chemical Tests 5

3 GENERAL SITE CONDITIONS 6
3.1 GEOLOGY 6
3.2 SUBSURFACE STRATIGRAPHY 6
3.3 GROUNDWATER OBSERVATIONS 7

4 GEOTECHNICAL RECOMMENDATIONS 8
4.1 GENERAL 8
4.2 EXPANSIVE SOIL CHARACTERISTICS 8
4.3 DRILLED STRAIGHT-SIDED PIERS 9
4.3.1 Axial Capacity 9
4.3.2 Group Effects 11
4.3.3 LPILE Parameters (Version 7.0) 11
4.4 INTERIOR FLOOR SUPPORT 12
4.4.1 General 12
4.5 SOLUBLE SULFATE 13

5 PAVEMENT DESIGN AND CONSTRUCTION CRITERIA 15
5.1 GENERAL 15
5.2 PAVEMENT THICKNESS FOR BAY DRIVEWAYS 15
5.3 PAVEMENTS ON EXPANSIVE SOILS 15

6 CONSTRUCTION CONSIDERATIONS 17
6.1 DEMOLITION 17
6.2 EXISTING UTILITIES 17
6.3 SITE PREPARATION 17
6.3 EXCAVATION 18
6.3.1 General 18
6.4 MATERIAL REQUIREMENTS 18

7 LIMITATIONS 21

FIGURE
Figures 1 and 2, Exploration Location Plan and Vicinity Map

APPENDIX
A. Field Exploration Program
B. Chemical Analysis Report
C. GBA Geotechnical Report Insert

© 2018 Kleinfelder

GEOTECHNICAL ENGINEERING STUDY
FIRE STATION #3 AND #22 BAY REPLACEMENT
201 W. 30TH STREET / 5309 EAST RIVERSIDE DRIVE
AUSTIN, TEXAS

1 INTRODUCTION

1.1 PROJECT DESCRIPTION

We understand that the proposed project consists of the complete demolition and reconstruction of the fire engine bays for the City of Austin Fire Stations (FS) #3 and #22 in Austin, Texas. Reportedly, the results of a recent engineering forensic study indicated that the existing fire engine bay structures may be inadequate to support the loads from current, and likely future, fire-fighting vehicles. Reportedly, column loads for both existing bay structures are supported on drilled shaft foundations. Floor loads are supported by suspended structural slabs. We understand that the proposed reconstruction may include relatively minor expansion of the current bays footprints. The current planed dimensions for the existing bay structures are approximately 55 to 60 feet in length, and 35 to 40 feet in width. We also understand that the City of Austin is planning to support the new bays on drilled shaft and suspended floor slab foundation system.

Specific structural loading information was not available at the time of this report. Once available, loading information should be provided so that we can confirm the applicability of our recommendations.

1.2 PURPOSE AND SCOPE

Our study was generally performed based upon the Scope of Services presented in our proposal No. AUS18P77507R2 dated April 30, 2018. However, due to the encountered bedrock conditions in Fire Station 3, the borings were drilled deeper than originally planned to obtain the necessary subsurface information for foundation design.

The primary purpose of this geotechnical study is to provide recommendations for the design and construction of foundations for the proposed Fire Station #3 and #22 bays. To accomplish this purpose, our study included the following scope:

- Borings at FS #3 Site: Drilled and sampled 2 borings to a depth of approximately 45 feet below grade and 1 boring to a depth of 50 feet below grade. Hand-augered one boring south of the existing bay building to a depth of 5 feet below grade.

© 2018 Kleinfelder

KLEINFELDER 1826 Kramer Lane, Suite M, Austin, TX. 78758 p | 512.926.6650 f | 512.833.5058

- Borings at FS #22 Site: Drilled and sampled 3 borings to a depth of approximately 60 feet below grade.
- Performed laboratory tests on select samples for classification and to estimate engineering properties of the subsurface materials.
- Performed engineering analyses using the field and laboratory data to develop geotechnical engineering recommendations for use during the design of the foundations of the proposed structures.

Design of the project including site civil and building structural design has not been performed, and the assumed locations and/or elevations of structures may change. Kleinfelder should be provided with the design information when it is available to evaluate whether recommendations presented herein are still applicable or require modifications, it is possible that modification of our recommendations may be required based upon the final design.

© 2018 Kleinfelder

KLEINFELDER 1826 Kramer Lane, Suite M, Austin, TX. 78758 p | 512.926.6650 f | 512.833.5058

2 FIELD EXPLORATION AND LABORATORY TESTING

2.1 FIELD EXPLORATION

Subsurface conditions were explored by drilling and sampling 6 borings with a truck-mounted Mobile B-57 drill rig. An additional boring at FS #3 was advanced using hand-auger drilling. A schedule of the borings is presented in Table 2.1, and the approximate location of these borings is presented on Figures 1 and 2, Exploration Location Plan, and Vicinity Maps in Appendix A.

Table 2.1 - Schedule of Borings

Location	Boring No.	Depth	Date Drilled	Structure
FS #3	SB-1	50 feet	August 27, 2018	Engine Bay
FS #3	SB-2 and SB-3	45 feet	August 28 - 29, 2018	Engine Bay
FS #3	SB-4	5 feet	September 11, 2018	Engine Bay
FS #22	B-1 to B-3	60 feet	August 29 - 30, 2018	Engine Bay

Boring locations were established in the field by a representative of Kleinfelder. A hand-held Global Positioning System (GPS) with a horizontal accuracy of about 15 feet was used to record the boring locations. If required, a professional surveyor should be hired to obtain accurate boring location information.

Hand auguring, Shelby-tube sampling, split spoon sampling, rock coring, and solid-stem auger drilling techniques were used to complete the borings.

Relatively undisturbed samples of cohesive soils were collected by using the drilling rig to push a seamless, steel tube sampler into the soil (based upon ASTM D1587). The depths at which these samples were collected are indicated on the boring logs in Appendix A, Field Exploration Program. After a tube was recovered, the sample was extruded in the field, examined, and logged. The sample was then placed in a plastic bag to reduce moisture loss and protect the sample. During logging, an estimate of the sample consistency was obtained using a pocket penetrometer. This test provides relative strength data that is used as an approximate indicator of shear strength. The result of the penetrometer reading is recorded at a corresponding depth on the boring log.

© 2018 Kleinfelder

KLEINFELDER 1826 Kramer Lane, Suite M, Austin, TX. 78758 p | 512.926.6650 f | 512.833.5058

At select locations, samples were also collected by driving a split-spoon sampler in conjunction with the Standard Penetration Test (SPT). This technique involves driving the spoon sampler a distance into the soil using a free-falling hammer (based upon ASTM D1586). During the test, the logger records the number of blows required to drive the spoon sampler over three successive 6-inch increments. The first 6 inches is the “seating drive,” while the number of blows required to drive the sampler the last two 6-inch increments is the “penetration” in blows per foot. Where resistance was high, the number of inches of penetration for 50 blows of the hammer is recorded. When less than 6 inches of penetration is obtained, the test is terminated regardless of the drive increment. The results of the penetration test are reported on the boring logs at the corresponding depth. Materials recovered from the split spoon sampler are then examined and placed in a plastic bag to reduce moisture loss and protect the sample.

Samples of rock and/or rock-like materials were collected with an NX size double-tube core barrel fitted with a carbide bit. Sample recovery and Rock Quality Designation (RQD) for each core run of rock and rock-like material were calculated and recorded on the field logs. The RQD is a modified core recovery percentage in which all the pieces of sound core over 4 inches long are summed and divided by the length of the core run. The RQD measurements and calculations were conducted in accordance with the procedures described in the Reference. Core breaks caused by the drilling process were fitted together and counted as one piece. Where it was difficult to discern natural breaks from drilling breaks, the break was considered a natural break, thus providing conservatism in the RQD calculation. The core run intervals for the project were typically 5 feet in length. RQD is categorized according to Table 2.2.

Table 2.2 – RQD Categorization

RQD (%)	Description of Rock Quality
0 – 25	Very Poor
25 – 50	Poor
50 – 75	Fair
75 – 90	Good
90 – 100	Excellent

At the completion of drilling, each boring was backfilled with 3/4-inch bentonite hole plug and auger cuttings up to and slightly above the existing ground surface except in borings that were drilled through concrete. The borings that were drilled through existing pavements were patched at the surface with concrete.

© 2018 Kleinfelder

KLEINFELDER 1826 Kramer Lane, Suite M, Austin, TX. 78758 p | 512.926.6650 f | 512.833.5058

Boring logs are presented in Appendix A with soil and rock description keys. The logs indicate the material types, depths, and other details of materials encountered for each boring. Soil/rock descriptions presented upon the boring log resulted from a combination of field and laboratory test data. Stratigraphy lines in the boring logs correspond to the approximate boundary between strata. However, the in-situ subsurface transition can be, and is often gradual.

2.2 LABORATORY TESTING

Samples of subsurface materials from the borings were visually examined and the field classifications were verified by the engineer in the laboratory. Natural moisture content tests, Atterberg limits (liquid and plastic limits) determinations, unconfined compression tests, and sieve analysis tests were performed on select soil samples to establish index and strength properties and grain size characteristics, and to classify the soils according to the Unified Soil Classification System (USCS). The results of these tests are shown on the boring logs.

2.2.1 Chemical Tests

One combined soil sample for FS #3 and one combined soil sample for FS #22 were tested to determine the pH, soluble sulfate, chloride concentrations, and soil resistivity. A summary of these test results is listed in Section 4.6 of this report and the detailed test results are provide in Appendix B.

© 2018 Kleinfelder

KLEINFELDER 1826 Kramer Lane, Suite M, Austin, TX. 78758 p | 512.926.6650 f | 512.833.5058

3 GENERAL SITE CONDITIONS

3.1 GEOLOGY

The Austin Sheet of the Geologic Atlas of Texas locates the FS #22 project site within the Ozan Formation (Ko) of the Cretaceous-Late age. These materials primarily consist of highly-plastic clay, with various amounts of calcareous materials, silt, and sand. The site of FS #3 is situated within an outcropping of the Austin Chalk Formation. The Austin Chalk formation typically consists of clays overlying chalky limestone. The thickness of the clay above the limestone varies but is generally encountered at a shallow depth. The upper portions of the limestone are generally weathered, fractured, and very light brown to light yellow brown in color. Some zones of severely weathered limestone that are clay-like can be present above the weathered material. The underlying primary limestone is generally harder than the weathered limestone and is light to medium gray in color.

3.2 SUBSURFACE STRATIGRAPHY

The borings at FS #3 indicate the presence of moderate to high plasticity clay of depths varying from 26 to 28 feet. The clay overlays light gray limestone to the boring termination depth of approximately 50 feet below grade.

Based on the results of the borings at FS #22, the subsurface conditions at the site indicate the presence of alternating clay, sand, and gravel layers overlaying weathered gray shale. The gray shale was encountered at an approximate depth of 35 to 38 feet below grade.

The various types and depths of subsurface strata observed in the borings drilled for this study are shown on the Boring Logs presented in Appendix A of this Report. The strata thickness and general descriptions on the boring logs are based solely on the materials observed in the borings drilled for this study.

The descriptions are general and the range of depths approximate, because boundaries between different strata are seldom clear and abrupt in the field. In addition, the lines separating major strata types on the boring Logs do not necessarily represent distinct lines of demarcation for the various strata.

© 2018 Kleinfelder

3.3 GROUNDWATER OBSERVATIONS

The borings were advanced using techniques that allow for direct and indirect observations of seepage and groundwater during drilling operations. Water was encountered in Boring B-3 at a depth of 35 feet below grade. 15 minutes after encountering water in boring B-3, the water depth was measured to be 34 feet below grade. Free water was not encountered in the remaining borings. Once rock coring is performed on a boring, water is introduced to the boring and water readings were not taken below the start of rock coring. These observations do not preclude the possibility of seepage or groundwater, and are only indicative of conditions at the time and place indicated.

The occurrence and variation of groundwater can vary due to many factors. These factors include seasonal changes, site topography, surface runoff, the layering and permeability of subsurface strata; water levels in waterways, utilities, and other factors not evident at the time of this study. Groundwater is likely perched above the limestone bedrock and within joints in the bedrock, especially during rainy seasons. The possibility of groundwater and its fluctuation should be considered when developing this project.

© 2018 Kleinfelder

KLEINFELDER 1826 Kramer Lane, Suite M, Austin, TX. 78758 p | 512.926.6650 f | 512.833.5058

4 GEOTECHNICAL RECOMMENDATIONS

4.1 GENERAL

Based on the results of our evaluation, in our professional opinion, the project site can be developed for the proposed construction using conventional grading and excavation and foundation construction techniques, provided that the recommendations presented herein are incorporated into the design and construction of the project.

Recommendations submitted herein are based, in part, upon data obtained from our subsurface exploration. The nature and extent of subsurface variations that may exist at the proposed project site will not become evident until construction. Kleinfelder should be on site during foundation subgrade preparation to observe conditions. If significant variations are observed, the recommendations presented in this report may need to be revised. In addition, if changes in the nature, design, location or depth of the proposed structure are planned, Kleinfelder should be notified to review and modify the conclusions and recommendations contained in this report as appropriate. Changes in subgrade preparation and foundation design recommendations will not be considered valid unless provided in writing. General recommendations regarding geotechnical aspects of the project design and construction are presented below.

4.2 EXPANSIVE SOIL CHARACTERISTICS

An estimate of the potential vertical movement (PVM) was made using the Potential Vertical Rise (PVR) Method 124-E published by TxDOT, engineering judgment, and our experience. Based on this information, the estimated soil movement, or Potential Vertical Movement (PVM) for each site was estimated for a full seasonal moisture cycle based on the Potential Vertical Rise (PVR) Method 124-E published by TxDOT. The estimated PVM for each site is summarized in Table 4.1 below.

TABLE 4.1: Estimated PVM for FS #3 and FS #22

Location	Estimated PVM (inches)
FS #3	1 ½ to 3
FS #22	2 to 3

© 2018 Kleinfelder

These soil movements can be caused by either shrink or swell movements, depending on seasonal moisture fluctuations. Recognize that this value range is not exact and is only an indication of the potential movements due to expansive soil for seasonal moisture fluctuations. Actual movements may be significantly larger than estimated due to inadequate site grading, poor drainage, ponding surface water, and/or leaks in utility lines. Significant changes to existing site grades can also alter actual movements by changing the thickness of the expansive soil and/or altering the active moisture zone depth. Recognize that this value is not an exact value but is only an indication of the potential movements due to expansive soil for seasonal moisture fluctuations.

4.3 DRILLED STRAIGHT-SIDED PIERS

4.3.1 Axial Capacity

In our opinion, the proposed FS #3 and FS #22 bays can be supported on straight-sided drilled shafts. Based on the encountered subsurface conditions at FS #3, the drilled shafts should terminate in the light gray limestone strata. If the drilled shafts terminate in the light gray limestone strata, then bearing capacity and side friction between the concrete and the limestone can be used to support the loads. The side friction and bearing capacity by depth is summarized in Table 4.2 below.

TABLE 4.2: Bearing Capacity and Side Friction by Depth (FS #3)

Stratum	Depth (ft)	Maximum Allowable Bearing Capacity (psf)	Maximum Allowable Side Friction (psf)
Light Gray Limestone	28-50	40,000	2,000

Side resistance values can be used for both compressive and tensile load resistance. The shafts should have a minimum penetration of 10 feet into the light gray limestone strata and have a minimum diameter of 24 inches to support the proposed structure. Final penetration should be determined by the structural engineer based on axial and lateral loadings.

We consider that the proposed FS #22 bay can also be supported on straight-sided drilled shafts. Based on the encountered subsurface conditions at FS #22, the drilled shafts should terminate in the dark gray weathered shale strata. If the drilled shafts terminate in the dark gray weathered

© 2018 Kleinfelder

KLEINFELDER 1826 Kramer Lane, Suite M, Austin, TX. 78758 p | 512.926.6650 f | 512.833.5058

shale strata, then bearing capacity and side friction between the concrete and the weathered shale can be used to support the loads. The side friction and bearing capacity is summarized in Table 4.3 below.

TABLE 4.3: Side Friction by Depth (FS #22)

Stratum	Depth (ft)	Maximum Allowable Bearing Capacity (psf)	Maximum Allowable Side Friction (psf)
Dark Gray Weathered Shale	36-38	5,000	1,200

Side resistance values can be used for both compressive and tensile load resistance. The shafts should have a minimum penetration of 15 feet into the dark gray weathered shale strata and have a minimum diameter of 24 inches to support the proposed structure. Final depths should be determined by the structural engineer based on axial and lateral loadings.

The expansive subgrade may subject the shafts to uplift pressures and create tensile forces within the shafts. Accordingly, each shaft should be steel reinforced to withstand these forces. The actual uplift forces will vary with depth and moisture condition, but steel reinforcement design for the soil uplift pressures may be modeled using 1,000 psf acting over the entire shaft perimeter that is within the upper 12 feet.

Settlements of properly designed and constructed shafts should be less than ¾ inch. It should be noted that the performance of the foundations will be more sensitive to the construction quality than the soil-structure interaction. Monitoring of the foundation installation by the geotechnical engineer or representative of the engineer is recommended.

Groundwater was not encountered during our field exploration at FS #3. At FS #22, free water was encountered in Borings B-1 and B-3 at a depth of approximately 34 feet below grade. Groundwater may be encountered during installation of the shafts, particularly if construction proceeds during a wet period of the year. In some cases, rapid placement of steel and concrete may permit shaft installation to proceed; however, the seepage rates could be sufficient to require the use of temporary casing for proper installation of the shafts. The casing should be seated in the bearing stratum with water and most loose material removed prior to beginning the design penetration. Care must be taken that a sufficient head of plastic concrete is maintained within the casing during extraction.

© 2018 Kleinfelder

The concrete should have slump within 4 and 6 inches for uncased shafts and 5 and 7 inches for cased shafts. The concrete must be placed in a manner to avoid striking the reinforcing steel during placement. Compete installation of individual shafts should be accomplished within an 8-hour period in dry excavations and preferably as rapidly as possible in order to prevent deterioration of bearing surfaces.

Some intervals of the limestones are hard. These limestones can be difficult to penetrate, especially when drilling large diameter shafts. The drilled shaft excavations should be performed with hard rock drilling equipment suitable to perform this work by a contractor experienced in this area.

4.3.2 Group Effects

Some reduction for group effects should be considered where shafts will be installed in a group condition or where any shafts will be installed close together. To develop full load carrying capacity in side resistance, adjacent straight-sided drilled shafts should have a minimum center to center spacing of 2.5 times the diameter of the larger shaft. This spacing requirement includes proximity to existing shafts. Closer spacing will require some reductions in side resistance and/or changes in installation sequences. The design side shear for axial or uplift loads may be considered to vary linear from the full value at a spacing of 2.5 times the diameter of the larger shaft to 50 percent of the design value at a spacing of 1 times the diameter of the larger shaft.

4.3.3 LPILE Parameters (Version 7.0)

The LPILE parameters provided below are for the subsurface material described in the boring logs for the project. The depth of each layer can be generalized from the boring log. The top 5 feet of the subsurface profile in contact with the drilled shaft is neglected. p-y. Tables 4.4 and 4.5 provide the LPILE parameters for FS #3 and FS #22.

© 2018 Kleinfelder

KLEINFELDER 1826 Kramer Lane, Suite M, Austin, TX. 78758 p | 512.926.6650 f | 512.833.5058

TABLE 4.4: Lpile Parameters for FS #3

Lpile p-y Curve Model	Depth (ft)	Cohesion (psf)	Friction Angle (deg.)	Effective Unit Wt. (pcf)(1)	Modulus k (pci)
Soft Clay	0-5	0	--	58	20
Stiff Clay w/o Free Water	5-15	4,000	--	58	270
Stiff Clay w/o Free Water	15-28	2,400	--	58	135
Stiff Clay w/o Free Water	28-50	7,000	--	83	540

TABLE 4.5: Lpile Parameters for FS #22

Lpile p-y Curve Model	Depth (ft)	Cohesion (psf)	Friction Angle (deg.)	Effective Unit Wt. (pcf)(1)	Modulus k (pci)
Soft Clay	0-5	0	--	58	20
Stiff Clay w/o Free Water	5-17	2,500	--	58	135
API Sand	17-34	--	30	53	25
Stiff Clay w/o Free Water	34-60	7,000	--	78	540

No reduction in individual lateral shaft capacity is required for drilled shafts spaced at a minimum center-to-center spacing of five diameters. Appropriate lateral reduction factors should be used, if the spacing between shafts is less than five diameters.

4.4 INTERIOR FLOOR SUPPORT

4.4.1 General

Near-surface soil conditions at this site are interpreted to be relatively uniform and consist of high plasticity clay soil. The high plasticity clay soils remain stable with constant moisture contents;

© 2018 Kleinfelder

KLEINFELDER 1826 Kramer Lane, Suite M, Austin, TX. 78758 p | 512.926.6650 f | 512.833.5058

however, a change in the moisture content will cause the soil to swell or shrink thereby potentially causing movement and damage to the overlying structure

It is our understanding that the proposed bay reconstruction project includes structurally suspended floor slabs and crawl space. Based on this, potential shrink/swell movements associated with the near-surface highly-plastic clays should not affect the performance of the selected bay floor system. The crawl space will provide the necessary separation between the slab and soil movements associated with shrink/swell behavior. Similarly, structurally suspended grade beams will be isolated from soil movements by the crawl space.

4.5 SOLUBLE SULFATE

The degradation of concrete or cement grout can be caused by chemical agents in the soil or groundwater that react with concrete to either dissolve the cement paste or precipitate larger compounds within the concrete causing cracking and flaking. The concentration of water-soluble sulfates in the soils is a good indicator of the potential for chemical attack of concrete or cement grout. The American Concrete Institute (ACI) publication *Guide to Durable Concrete* (ACI 201.2R-08) provides guidelines for this assessment. The results of the sulfate testing indicate the potential for deterioration of concrete at FS #3 has a Class 0 exposure. For sites with Class 0 sulfate exposure, ACI does not have special requirements for sulfate resistance. The results of the sulfate testing indicate the potential for deterioration of concrete at FS #22 has a Class 1 exposure. For sites with Class 1 sulfate exposure, ACI recommends Type II cement or equivalent. The results from the sulfate content analysis can be seen below in Table 4.4.

TABLE 4.4: Sulfate Test Results

Location	Boring	Depth (feet)	Sulfate (ppm)
FS #3	SB-2	0.5 to 4	331
FS #22	B-3	2-4	20.9

4.6 SEISMIC HAZARDS SITE CLASS

This area of Texas is considered seismically inactive. Seismic designs in Texas are typically based upon the criteria established in the 2012 International Building Code (IBC). The seismic design is based upon the Site Class, as defined in Sections 1613.5.2 and 1613.5.5. Based upon

© 2018 Kleinfelder

KLEINFELDER 1826 Kramer Lane, Suite M, Austin, TX. 78758 p | 512.926.6650 f | 512.833.5058

the results of the site-specific borings and our experience with the local geologic conditions, the average subsurface conditions at both sites correspond to Site Class “C”. For this site class, the Mapped Spectral Response Acceleration at short periods (S_s) is about 0.064g, and the Mapped Spectral Response Acceleration at a 1 second period (S_1) is about 0.033g. For these accelerations, the Site Coefficients F_a and F_v are 1.2 and 1.7, respectively.

© 2018 Kleinfelder

KLEINFELDER 1826 Kramer Lane, Suite M, Austin, TX. 78758 p | 512.926.6650 f | 512.833.5058

5 PAVEMENT DESIGN AND CONSTRUCTION CRITERIA

5.1 GENERAL

Based on information provided by City of Austin, we understand that the replacement of the existing driveways may be part of the proposed fire engine bays reconstruction at Fire Stations 3 and 22. The existing driveway pavements consists of Portland cement concrete, which is the material is commonly used for heavy-duty sections for projects similar to the proposed bay rehabilitation.

5.2 PAVEMENT THICKNESS FOR BAY DRIVEWAYS

The pavement section thickness recommendations presented in this section are based on the encountered subsurface conditions, our project understanding, and our previous experience with similar projects. It should be noted that a detailed pavement analysis was beyond our scope for this project. As such, the following table presents our recommended typical heavy-duty section for the proposed bays driveways. This section is not based on specific traffic loading information or pavement life expectancy.

TABLE 5.3: PAVEMENT THICKNESS RECOMMENDATIONS

Traffic	Pavement Section
Heavy Duty Pavement for Fire Engine Bay Driveways	8" Portland Cement Concrete Pavement over 8” Crushed Limestone Base

5.3 PAVEMENTS ON EXPANSIVE SOILS

At FS #3, we anticipate potential vertical movement of approximately 1 ½ to 3 inches. At FS #22, we anticipate potential vertical movement of approximately 2 to 3 inches. The sub base should extend a minimum of 12 inches outside the curb line. This will improve the support for the edge of the pavement and also lessen the "edge effect" associated with shrinkage during dry periods. The use of sand as a leveling course below pavement in expansive clay areas should be prevented as these porous soils can allow water inflow between the pavement and subgrade, facilitating heave and strength loss within the subgrade soil.

© 2018 Kleinfelder

To reduce the potential vertical movement, we recommend excavating 1 foot of the in-situ fat clays and replacing with select fill. Prior to fill placement, the exposed subgrade should be scarified to a depth of 12 inches, moisture conditioned to +2 to 5% of optimum water content and compacted to 95% compaction.

It is important to reduce moisture changes in the pavement subgrade and sub base. The pavement and adjacent areas should be well drained. The pavement and surrounding grades must have positive drainage that quickly removes surface water and inhibits the absorption of surface water into the subgrade soils. Regular maintenance should be performed on cracks in the pavement surface to reduce water passing through to the base or sub base material. Even with these precautions, some distress may still occur, which will require periodic maintenance.

Consideration should be given to the location of existing and proposed trees, as they have been documented to desiccate surrounding subgrade soil and result in soil shrinkage and settlement. The zone of the desiccation varies by tree, but it is generally recommended that trees are set back so that the drip-line of the mature tree will not extend over or near the pavement structure. If existing mature trees are allowed to remain adjacent to the roadway, we recommend the installation of root barriers to keep these trees from causing differential movement of the new roadway.

© 2018 Kleinfelder

KLEINFELDER 1826 Kramer Lane, Suite M, Austin, TX. 78758 p | 512.926.6650 f | 512.833.5058

6 CONSTRUCTION CONSIDERATIONS

6.1 DEMOLITION

Initial site preparation for the proposed project should commence with demolition of the existing pavements, fences, sidewalks, buildings, and other structures within the proposed construction areas. Demolition should also include removal of all utilities lines within the project site that will be abandoned as part of the construction. All broken asphaltic concrete and Portland cement concrete and other debris from demolition should be removed from the site. Areas disturbed during demolition should be approved by the geotechnical engineer prior to placement of structural fill. All disturbed soils should be undercut to expose competent, undisturbed, medium dense to dense or firm to stiff native soils prior to placement of structural fill.

We understand that the project consists of demolition and reconstruction of the existing fire engine bays. During demolition of the existing structures, any foundation element within 3 feet of slab level should be excavated and removed. Existing piers should have a minimum clearance of 3 feet from the slab level if it does not impede new construction. If the existing foundation impedes new construction then the foundation system should be removed, or new construction should be adjusted accordingly. Voids created due to the removal of existing foundation elements should be backfilled using on-site soil or structural fill material and compaction criteria provided in this report should be followed. Flowable backfill should be used to fill voids due to the removal of deep foundation elements.

6.2 EXISTING UTILITIES

Relocation/demolition of any existing utility lines within the zone of influence of proposed construction areas should also be completed as part of the site preparation. The lines should be relocated to areas outside of the proposed construction. Excavations created by removal/demolition of the existing lines should be cut wide enough to allow for use of heavy construction equipment to compact the backfill. In addition, the base of the excavations should be approved by the geotechnical engineer or approved representative prior to placement of backfill.

6.3 SITE PREPARATION

Before construction, care should be taken to see that any deleterious material present is removed from the site. Care should also be exercised during the grading operations at the site. The traffic

© 2018 Kleinfelder

of heavy equipment, including heavy compaction equipment, may create a general deterioration of the surficial clay soils. Therefore, it should be anticipated that some construction difficulties could be encountered during periods when these soils are saturated and that it may be necessary to improve, remove or avoid the saturated soils.

Proper drainage should be established so that ponding of surface runoff does not occur and cause construction delays. Where water seepage is encountered during construction, sloping excavation bottoms to a sump or a low point and use of conventional de-watering equipment may be necessary. Control of site surface drainage should be maintained at all times during construction so that drainage is directed away from open excavated areas.

6.3 EXCAVATION

6.3.1 General

Based on the subsurface conditions encountered in the borings, it appears that the overburden materials can be excavated using conventional soil excavation equipment. All excavations must comply with applicable local, state and federal safety regulations. The responsibility for excavation safety and stability of temporary construction slopes lies solely with the contractor. We are providing this information below solely as a service to our client. Under no circumstances should this information provided be interpreted to mean that Kleinfelder is assuming responsibility for construction site safety or the Contractor's activities, such responsibility is not being implied and should not be inferred.

6.4 MATERIAL REQUIREMENTS

Table 6.1 provides material, moisture, and density requirements for a variety of materials and applications. Compaction of each lift should be continuous over its entire area. Fill should be placed in loose horizontal lifts not exceeding 8 inches, with the intent of providing a compacted lift thickness of 6 inches.

When crushed limestone is used, the maximum allowable size is 1.5 inches and the maximum loose lift thickness should be reduced to 6 inches (or less if there is difficulty achieving compaction). Fill placed along slopes should be placed in horizontal lifts that are benched into the slope. The slopes should be overbuilt and cut back to final grades to ensure compaction along the face of the slopes.

© 2018 Kleinfelder

KLEINFELDER 1826 Kramer Lane, Suite M, Austin, TX. 78758 p | 512.926.6650 f | 512.833.5058

TABLE 6.1: MATERIAL AND COMPACTION REQUIREMENTS

Material Use	Material Requirements	Proctor Test Method	(1)Density Requirement	(1)Moisture Requirement
Moisture Conditioned On-Site CH Soils	Organics < 2 %	ASTM D 698	95% minimum	+2 to +5 %
"Non-expansive" Select Fill	PI: 7 to 15, LL≤35 Passing #200 Sieve: ≤70% Organics < 2 %	ASTM D 698	98 % minimum	-1 to +3 %
Flexible Base: Pavement	TxDOT Item 247, Type A, Grade 1 or 2	ASTM D 698	98 % minimum	-3 to +3 %

The placement and compaction of fill material must be observed, monitored, and tested by Kleinfelder on a full-time basis. Prior to placing any fill material above existing materials, the exposed subgrade should be proofrolled. The exposed subgrade materials must be firm and able to support the construction equipment without displacement. Soft or yielding subgrade must be corrected and made stable before construction proceeds. Proof-rolling should be used to detect soft spots or pumping subgrade areas. Proof-rolling should be performed using a heavy pneumatic tired roller, loaded dump truck, or similar piece of equipment weighing at least 25 tons. Proof-rolling is intended to achieve additional compaction and to locate unstable areas and must be observed by Kleinfelder. Soft spots or areas of pumping subgrade must be undercut and reworked. Where fill placement is planned, the proof-rolling must occur once the exiting soils have been excavated and before the fill placement begins. Proof-rolling is intended not only for the foundation area, but also within all areas of pavements, sidewalks, walls, and other locations that will support surface loads.

Each lift of select fill material should be tested to confirm it has the specified moisture and compaction. One moisture/density test should be performed for every 5,000 square-feet of compacted area, or for every 150-linear foot of utility backfill. For smaller areas, a minimum of three tests should be provided for every lift. Subsequent lifts should not be placed until the exposed lift has the specified moisture and density. Lifts failing to meet the moisture and density requirements should be reworked to meet the required specifications.

© 2018 Kleinfelder

The specified moisture content must be maintained until compaction of the overlying lift, or construction of overlying flatwork. Failure to maintain the moisture content could result in excessive soil movement, and can also have a detrimental effect on overlying plastic concrete. The contractor must provide some means of controlling the moisture content (such as water hoses, water trucks, etc.). Maintaining subgrade moisture is always critical, but will require the most effort during warm, windy, and/or sunny conditions. Density and moisture testing is recommended to provide some indication that adequate earthwork is being provided. However, the quality of the fill is the sole responsibility of the contractor. Satisfactory verification testing is not a guarantee of the quality of the contractor's earthwork operations.

© 2018 Kleinfelder

KLEINFELDER 1826 Kramer Lane, Suite M, Austin, TX. 78758 p | 512.926.6650 f | 512.833.5058

7 LIMITATIONS

This work was performed in a manner consistent with that level of care and skill ordinarily exercised by other members of Kleinfelder's profession practicing in the same locality, under similar conditions and at the date the services are provided. Our preliminary conclusions, opinions and recommendations are based on a limited number of observations and data. It is possible that conditions could vary between or beyond the data evaluated. Kleinfelder makes no other representation, guarantee or warranty, express or implied, regarding the services, communication (oral or written), report, opinion, or instrument of service provided.

This report may be used only by the Client and the registered design professional in responsible charge and only for the purposes stated for this specific engagement within a reasonable time from its issuance, but in no event later than two (2) years from the date of the report.

The scope of services for this subsurface exploration and preliminary geotechnical report did not include environmental assessments or evaluations regarding the presence or absence of wetlands or hazardous substances in the soil, surface water, or groundwater at this site.

© 2018 Kleinfelder

KLEINFELDER 1826 Kramer Lane, Suite M, Austin, TX. 78758 p | 512.926.6650 f | 512.833.5058

KLEINFELDER

Bright People. Right Solutions.

Appendix A

PLOTTED: 09/25/2018 1:50:10 PM BY: MPalmer

N

LEGEND

SOIL BORING

NOTE:
BASE MAPPING AND VICINITY MAP CREATED FROM LAYERS COMPILED BY ESRI PRODUCTS AND 2018 MICROSOFT CORPORATION. COORDINATE SYSTEM: GCS WGS 1984 0

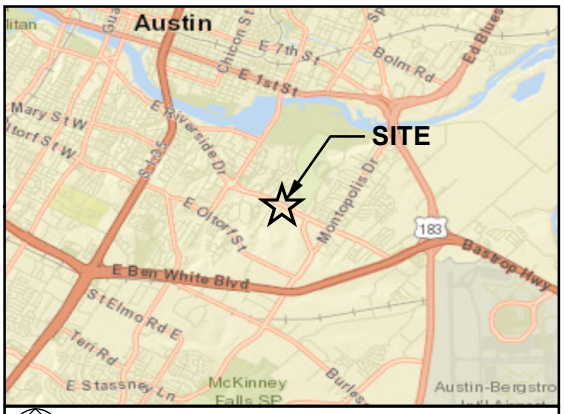

VICINITY MAP

NOT TO SCALE

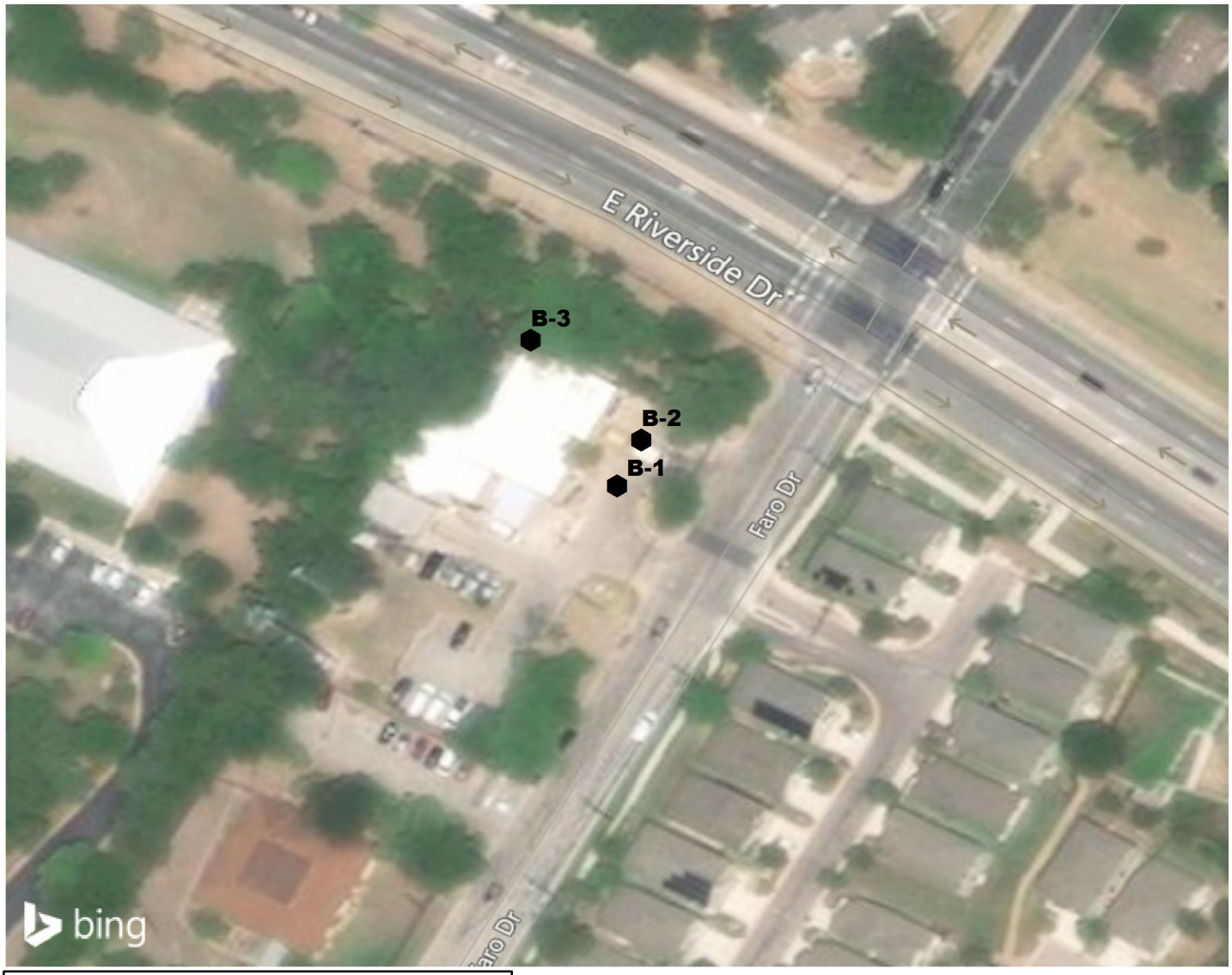

The information included on this graphic representation has been compiled from a variety of sources and is subject to change without notice. Kleinfelder makes no representations or warranties, express or implied, as to accuracy, completeness, timeliness, or rights to the use of such information. This document is not intended for use as a land survey product nor is it designed or intended as a construction design document. The use or misuse of the information contained on this graphic representation is at the sole risk of the party using or misusing the information.

THIS DRAWING IS NOT TO SCALE

KLEINFELDER
Bright People. Right Solutions.

PROJECT NO.	20190836
DRAWN BY:	MAP
CHECKED BY:	BB
DATE:	09-25-2018
REVISED:	-

EXPLORATION LOCATION PLAN AND VICINITY MAP

Fire Station #22 Bay Replacement
5309 E. Riverside Drive
Austin, Texas

FIGURE

1

GIS FILE PATH: \\azrgisstorp01\Working_clients_Automated_Exploration Plans

PLOTTED: 09/25/2018 1:48:32 PM BY: MPalmer

N

LEGEND

SOIL BORING

NOTE:
BASE MAPPING AND VICINITY MAP CREATED FROM LAYERS COMPILED BY ESRI PRODUCTS AND 2018 MICROSOFT CORPORATION. COORDINATE SYSTEM: GCS WGS 1984

VICINITY MAP

NOT TO SCALE

The information included on this graphic representation has been compiled from a variety of sources and is subject to change without notice. Kleinfelder makes no representations or warranties, express or implied, as to accuracy, completeness, timeliness, or rights to the use of such information. This document is not intended for use as a land survey product nor is it designed or intended as a construction design document. The use or misuse of the information contained on this graphic representation is at the sole risk of the party using or misusing the information.

THIS DRAWING IS NOT TO SCALE

KLEINFELDER
Bright People. Right Solutions.

PROJECT NO.	20190836
DRAWN BY:	MAP
CHECKED BY:	BB
DATE:	09-25-2018
REVISED:	-

EXPLORATION LOCATION PLAN AND VICINITY MAP

Fire Station #3 Bay Replacement
201 West 30th Street
Austin, Texas

FIGURE

2

GIS FILE PATH: \\azrgisstorp01\Working_clients_Automated_Exploration Plans

SAMPLE/SAMPLER TYPE GRAPHICS

- BULK / GRAB / BAG SAMPLE
- CALIFORNIA SAMPLER (3 in. (76.2 mm.) outer diameter)
- STANDARD PENETRATION SPLIT SPOON SAMPLER (2 in. (50.8 mm.) outer diameter and 1-3/8 in. (34.9 mm.) inner diameter)
- PUSH TUBE SAMPLER
- HOLLOW STEM AUGER
- SOLID STEM AUGER
- WASH BORING
- AIR ROTARY
- MUD ROTARY
- TEXAS CONE PENETRATION
- CORE SAMPLER

GROUND WATER GRAPHICS

- WATER LEVEL (level where first observed)
- WATER LEVEL (level after exploration completion)
- WATER LEVEL (additional levels after exploration)
- OBSERVED SEEPAGE

NOTES

- The report and graphics key are an integral part of these logs. All data and interpretations in this log are subject to the explanations and limitations stated in the report.
- Lines separating strata on the logs represent approximate boundaries only. Actual transitions may be gradual or differ from those shown.
- No warranty is provided as to the continuity of soil or rock conditions between individual sample locations.
- Logs represent general soil or rock conditions observed at the point of exploration on the date indicated.
- In general, Unified Soil Classification System designations presented on the logs were based on visual classification in the field and were modified where appropriate based on gradation and index property testing.
- Fine grained soils that plot within the hatched area on the Plasticity Chart, and coarse grained soils with between 5% and 12% passing the No. 200 sieve require dual USCS symbols, ie., GW-GM, GP-GM, GW-GC, GP-GC, GC-GM, SW-SM, SP-SM, SW-SC, SP-SC, SC-SM.
- If sampler is not able to be driven at least 6 inches then 50/X indicates number of blows required to drive the identified sampler X inches with a 140 pound hammer falling 30 inches.

ABBREVIATIONS

WOH - Weight of Hammer
WOR - Weight of Rod

UNIFIED SOIL CLASSIFICATION SYSTEM (ASTM D 2487)

COARSE GRAINED SOILS (More than half of material is larger than the #200 sieve)	**GRAVELS** (More than half of coarse fraction is larger than the #4 sieve)	CLEAN GRAVEL WITH <5% FINES	Cu ≥4 and 1≤ Cc≤3	**GW**	WELL-GRADED GRAVELS, GRAVEL-SAND MIXTURES WITH LITTLE OR NO FINES
			Cu <4 and/ or 1>Cc >3	**GP**	POORLY GRADED GRAVELS, GRAVEL-SAND MIXTURES WITH LITTLE OR NO FINES
		GRAVELS WITH 5% TO 12% FINES	Cu ≥4 and 1≤ Cc≤3	**GW-GM**	WELL-GRADED GRAVELS, GRAVEL-SAND MIXTURES WITH LITTLE FINES
				GW-GC	WELL-GRADED GRAVELS, GRAVEL-SAND MIXTURES WITH LITTLE CLAY FINES
			Cu <4 and/ or 1>Cc >3	**GP-GM**	POORLY GRADED GRAVELS, GRAVEL-SAND MIXTURES WITH LITTLE FINES
				GP-GC	POORLY GRADED GRAVELS, GRAVEL-SAND MIXTURES WITH LITTLE CLAY FINES
		GRAVELS WITH > 12% FINES		**GM**	SILTY GRAVELS, GRAVEL-SILT-SAND MIXTURES
				GC	CLAYEY GRAVELS, GRAVEL-SAND-CLAY MIXTURES
				GC-GM	CLAYEY GRAVELS, GRAVEL-SAND-CLAY-SILT MIXTURES
	SANDS (More than half of coarse fraction is smaller than the #4 sieve)	CLEAN SANDS WITH <5% FINES	Cu ≥6 and 1≤ Cc≤3	**SW**	WELL-GRADED SANDS, SAND-GRAVEL MIXTURES WITH LITTLE OR NO FINES
			Cu <6 and/ or 1>Cc >3	**SP**	POORLY GRADED SANDS, SAND-GRAVEL MIXTURES WITH LITTLE OR NO FINES
		SANDS WITH 5% TO 12% FINES	Cu ≥6 and 1≤ Cc≤3	**SW-SM**	WELL-GRADED SANDS, SAND-GRAVEL MIXTURES WITH LITTLE FINES
				SW-SC	WELL-GRADED SANDS, SAND-GRAVEL MIXTURES WITH LITTLE CLAY FINES
			Cu <6 and/ or 1>Cc >3	**SP-SM**	POORLY GRADED SANDS, SAND-GRAVEL MIXTURES WITH LITTLE FINES
				SP-SC	POORLY GRADED SANDS, SAND-GRAVEL MIXTURES WITH LITTLE CLAY FINES
		SANDS WITH > 12% FINES		**SM**	SILTY SANDS, SAND-GRAVEL-SILT MIXTURES
				SC	CLAYEY SANDS, SAND-GRAVEL-CLAY MIXTURES
				SC-SM	CLAYEY SANDS, SAND-SILT-CLAY MIXTURES

FINE GRAINED SOILS (More than half of material is smaller than the #200 sieve)	SILTS AND CLAYS (Liquid Limit less than 50)	**ML**	INORGANIC SILTS AND VERY FINE SANDS, SILTY OR CLAYEY FINE SANDS, SILTS WITH SLIGHT PLASTICITY
		CL	INORGANIC CLAYS OF LOW TO MEDIUM PLASTICITY, GRAVELLY CLAYS, SANDY CLAYS, SILTY CLAYS, LEAN CLAYS
		CL-ML	INORGANIC CLAYS-SILTS OF LOW PLASTICITY, GRAVELLY CLAYS, SANDY CLAYS, SILTY CLAYS, LEAN CLAYS
		OL	ORGANIC SILTS & ORGANIC SILTY CLAYS OF LOW PLASTICITY
	SILTS AND CLAYS (Liquid Limit greater than 50)	**MH**	INORGANIC SILTS, MICACEOUS OR DIATOMACEOUS FINE SAND OR SILT
		CH	INORGANIC CLAYS OF HIGH PLASTICITY, FAT CLAYS
		OH	ORGANIC CLAYS & ORGANIC SILTS OF MEDIUM-TO-HIGH PLASTICITY

KLEINFELDER
Bright People. Right Solutions.

PROJECT NO.:	20190836
DRAWN BY:	MAP
CHECKED BY:	BB
DATE:	9/25/2018
REVISED:	-

GRAPHICS KEY

Fire Station #3 and #22 Bay Replacement
201 W. 30th Street / 5309 East Riverside Drive
Austin, Texas

FIGURE

A-1

PLOTTED: 10/24/2018 11:01 AM BY: BBaugh
OFFICE FILTER: AUSTIN
PROJECT NUMBER: 20190836.001A [LEGEND 1 (GRAPHICS KEY) USCS_TEXAS]
gINT FILE: Klf_gint_master_2017
gINT TEMPLATE: E:KLF_STANDARD_GINT_LIBRARY_2017.GLB

GRAIN SIZE

DESCRIPTION		SIEVE SIZE	GRAIN SIZE	APPROXIMATE SIZE
Boulders		>12 in. (304.8 mm.)	>12 in. (304.8 mm.)	Larger than basketball-sized
Cobbles		3 - 12 in. (76.2 - 304.8 mm.)	3 - 12 in. (76.2 - 304.8 mm.)	Fist-sized to basketball-sized
Gravel	coarse	3/4 -3 in. (19 - 76.2 mm.)	3/4 -3 in. (19 - 76.2 mm.)	Thumb-sized to fist-sized
	fine	#4 - 3/4 in. (#4 - 19 mm.)	0.19 - 0.75 in. (4.8 - 19 mm.)	Pea-sized to thumb-sized
Sand	coarse	#10 - #4	0.079 - 0.19 in. (2 - 4.9 mm.)	Rock salt-sized to pea-sized
	medium	#40 - #10	0.017 - 0.079 in. (0.43 - 2 mm.)	Sugar-sized to rock salt-sized
	fine	#200 - #40	0.0029 - 0.017 in. (0.07 - 0.43 mm.)	Flour-sized to sugar-sized
Fines		Passing #200	<0.0029 in. (<0.07 mm.)	Flour-sized and smaller

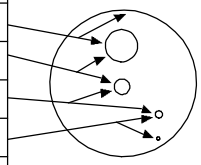

SECONDARY CONSTITUENT

	AMOUNT	
Term of Use	Secondary Constituent is Fine Grained	Secondary Constituent is Coarse Grained
Trace	<5%	<15%
With	≥5 to <15%	≥15 to <30%
Modifier	≥15%	≥30%

MOISTURE CONTENT

DESCRIPTION	FIELD TEST
Dry	Absence of moisture, dusty, dry to the touch
Moist	Damp but no visible water
Wet	Visible free water, usually soil is below water table

CEMENTATION

DESCRIPTION	FIELD TEST
Weakly	Crumbles or breaks with handling or slight finger pressure
Moderately	Crumbles or breaks with considerable finger pressure
Strongly	Will not crumble or break with finger pressure

CONSISTENCY - FINE-GRAINED SOIL

CONSISTENCY	SPT - N_{60} (# blows / ft)	Pocket Pen (tsf)	UNCONFINED COMPRESSIVE STRENGTH (Q_u)(psf)	VISUAL / MANUAL CRITERIA
Very Soft	<2	PP < 0.25	<500	Thumb will penetrate more than 1 inch (25 mm). Extrudes between fingers when squeezed.
Soft	2 - 4	0.25 ≤ PP <0.5	500 - 1000	Thumb will penetrate soil about 1 inch (25 mm). Remolded by light finger pressure.
Medium Stiff	4 - 8	0.5 ≤ PP <1	1000 - 2000	Thumb will penetrate soil about 1/4 inch (6 mm). Remolded by strong finger pressure.
Stiff	8 - 15	1 ≤ PP <2	2000 - 4000	Can be imprinted with considerable pressure from thumb.
Very Stiff	15 - 30	2 ≤ PP <4	4000 - 8000	Thumb will not indent soil but readily indented with thumbnail.
Hard	>30	4 ≤ PP	>8000	Thumbnail will not indent soil.

FROM TERZAGHI AND PECK, 1948; LAMBE AND WHITMAN, 1969; FHWA, 2002; AND ASTM D2488

REACTION WITH HYDROCHLORIC ACID

DESCRIPTION	FIELD TEST
None	No visible reaction
Weak	Some reaction, with bubbles forming slowly
Strong	Violent reaction, with bubbles forming immediately

APPARENT / RELATIVE DENSITY - COARSE-GRAINED SOIL

APPARENT DENSITY	SPT-N_{60} (# blows/ft)	MODIFIED CA SAMPLER (# blows/ft)	CALIFORNIA SAMPLER (# blows/ft)	RELATIVE DENSITY (%)
Very Loose	<4	<4	<5	0 - 15
Loose	4 - 10	5 - 12	5 - 15	15 - 35
Medium Dense	10 - 30	12 - 35	15 - 40	35 - 65
Dense	30 - 50	35 - 60	40 - 70	65 - 85
Very Dense	>50	>60	>70	85 - 100

FROM TERZAGHI AND PECK, 1948

PLASTICITY

DESCRIPTION	LL	FIELD TEST
Non-plastic	NP	A 1/8-in. (3 mm.) thread cannot be rolled at any water content.
Low (L)	< 30	The thread can barely be rolled and the lump or thread cannot be formed when drier than the plastic limit.
Medium (M)	30 - 50	The thread is easy to roll and not much time is required to reach the plastic limit. The thread cannot be rerolled after reaching the plastic limit. The lump or thread crumbles when drier than the plastic limit.
High (H)	> 50	It takes considerable time rolling and kneading to reach the plastic limit. The thread can be rerolled several times after reaching the plastic limit. The lump or thread can be formed without crumbling when drier than the plastic limit.

STRUCTURE

DESCRIPTION	CRITERIA
Stratified	Alternating layers of varying material or color with layers at least 1/4-in. thick, note thickness.
Laminated	Alternating layers of varying material or color with the layer less than 1/4-in. thick, note thickness.
Fissured	Breaks along definite planes of fracture with little resistance to fracturing.
Slickensided	Fracture planes appear polished or glossy, sometimes striated.
Blocky	Cohesive soil that can be broken down into small angular lumps which resist further breakdown.
Lensed	Inclusion of small pockets of different soils, such as small lenses of sand scattered through a mass of clay; note thickness.

ANGULARITY

DESCRIPTION	CRITERIA
Angular	Particles have sharp edges and relatively plane sides with unpolished surfaces.
Subangular	Particles are similar to angular description but have rounded edges.
Subrounded	Particles have nearly plane sides but have well-rounded corners and edges.
Rounded	Particles have smoothly curved sides and no edges.

KLEINFELDER
Bright People. Right Solutions.

PROJECT NO.: 20190836
DRAWN BY: MAP
CHECKED BY: BB
DATE: 9/25/2018
REVISED: -

SOIL DESCRIPTION KEY

Fire Station #3 and #22 Bay Replacement
201 W. 30th Street / 5309 East Riverside Drive
Austin, Texas

FIGURE
A-2

PLOTTED: 09/25/2018 01:52 PM BY: MPalmer
OFFICE FILTER: AUSTIN
PROJECT NUMBER: 20190836.001A [LEGEND 2 (SOIL DESC KEY)]
gINT FILE: Klf_gint_master_2017
gINT TEMPLATE: E:KLF_STANDARD_GINT_LIBRARY_2017.GLB

INFILLING TYPE

NAME	ABBR	NAME	ABBR
Albite	Al	Muscovite	Mus
Apatite	Ap	None	No
Biotite	Bi	Pyrite	Py
Clay	Cl	Quartz	Qz
Calcite	Ca	Sand	Sd
Chlorite	Ch	Sericite	Ser
Epidote	Ep	Silt	Si
Iron Oxide	Fe	Talc	Ta
Manganese	Mn	Unknown	Uk

DENSITY/SPACING OF DISCONTINUITIES

DESCRIPTION	SPACING CRITERIA
Unfractured	>6 ft. (>1.83 meters)
Slightly Fractured	2 - 6 ft. (0.061 - 1.83 meters)
Moderately Fractured	8 in - 2 ft. (203.20 - 609.60 mm)
Highly Fractured	2 - 8 in (50.80 - 203.30 mm)
Intensely Fractured	<2 in (<50.80 mm)

ADDITIONAL TEXTURAL ADJECTIVES

DESCRIPTION	RECOGNITION
Pit (Pitted)	Pinhole to 0.03 ft. (3/8 in.) (>1 to 10 mm.) openings
Vug (Vuggy)	Small openings (usually lined with crystals) ranging in diameter from 0.03 ft. (3/8 in.) to 0.33 ft. (4 in.) (10 to 100 mm.)
Cavity	An opening larger than 0.33 ft. (4 in.) (100 mm.), size descriptions are required, and adjectives such as small, large, etc., may be used
Honeycombed	If numerous enough that only thin walls separate individual pits or vugs, this term further describes the preceding nomenclature to indicate cell-like form.
Vesicle (Vesicular)	Small openings in volcanic rocks of variable shape and size formed by entrapped gas bubbles during solidification.

ADDITIONAL TEXTURAL ADJECTIVES

DESCRIPTION	CRITERIA
Unweathered	No evidence of chemical / mechanical alternation; rings with hammer blow.
Slightly Weathered	Slight discoloration on surface; slight alteration along discontinuities; <10% rock volume altered.
Moderately Weathered	Discoloring evident; surface pitted and alteration penetration well below surface; Weathering "halos" evident; 10-50% rock altered.
Highly Weathered	Entire mass discolored; Alteration pervading most rock, some slight weathering pockets; some minerals may be leached out.
Decomposed	Rock reduced to soil with relic rock texture/structure; Generally molded and crumbled by hand.

RELATIVE HARDNESS / STRENGTH DESCRIPTIONS

GRADE		UCS (Mpa)	FIELD TEST
R0	Extremely Weak	0.25 - 1.0	Indented by thumbnail
R1	Very Weak	1.0 - 5.0	Crumbles under firm blows of geological hammer, can be peeled by a pocket knife.
R2	Weak	5.0 - 25	Can be peeled by a pocket knife with difficulty, shallow indentations made by firm blow with point of geological hammer.
R3	Medium Strong	25 - 50	Cannot be scraped or peeled with a pocket knife, specimen can be fractured with a single firm blow of a geological hammer.
R4	Strong	50 - 100	Specimen requires more than one blow of geological hammer to fracture it.
R5	Very Strong	100 - 250	Specimen requires many blows of geological hammer to fracture it.
R6	Extremely Strong	> 250	Specimen can only be chipped with a geological hammer.

ROCK QUALITY DESIGNATION (RQD)

DESCRIPTION	RQD (%)
Very Poor	0 - 25
Poor	25 - 50
Fair	50 - 75
Good	75 - 90
Excellent	90 - 100

APERTURE

DESCRIPTION	CRITERIA [in (mm)]
Tight	<0.04 (<1)
Open	0.04 - 0.20 (1 - 5)
Wide	>0.20 (>5)

BEDDING CHARACTERISTICS

DESCRIPTION	Thickness [in (mm)]
Very Thick Bedded	>36 (>915)
Thick Bedded	12 - 36 (305 - 915)
Moderately Bedded	4 - 12 (102 - 305)
Thin Bedded	1 - 4 (25 - 102)
Very Thin Bedded	0.4 - 1 (10 - 25)
Laminated	0.1 - 0.4 (2.5 - 10)
Thinly Laminated	<0.1 (<2.5)

Bedding Planes — Planes dividing the individual layers, beds, or stratigraphy of rocks.

Joint — Fracture in rock, generally more or less vertical or traverse to bedding.

Seam — Applies to bedding plane with unspecified degree of weather.

JOINT ROUGHNESS COEFFICIENT (JRC)

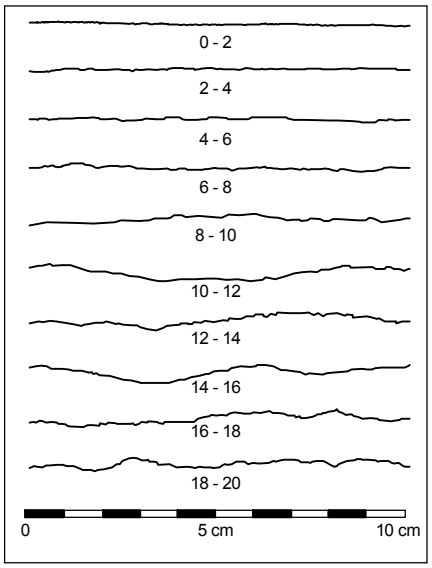

From Barton and Choubey, 1977

RQD — Rock-quality designation (RQD) Rough measure of the degree of jointing or fracture in a rock mass, measured as a percentage of the drill core in lengths of 10 cm. or more.

CORE SAMPLER TYPE GRAPHICS

CORE SAMPLER

AQ CORE BARREL (1.067 in. (27.1 mm.) core diameter)

AX CORE BARREL (1.185 in. (30.1 mm.) core diameter)

BQ CORE BARREL (1.433 in. (36.4 mm.) core diameter)

CONTINUOUS CORE SAMPLE (2.000 in. (50.8 mm.) core diameter)

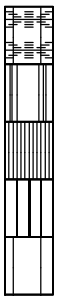

EX CORE BARREL (0.846 in. (21.5 mm.) core diameter)

HQ CORE SAMPLE (2.500 in. (63.5 mm.) core diameter)

NQ CORE SAMPLE (1.874 in. (47.6 mm.) core diameter)

NO RECOVERY CORE SAMPLE

NX CORE SAMPLE (2.154 in. (54.7 mm.) core diameter)

KLEINFELDER
Bright People. Right Solutions.

PROJECT NO.:	20190836
DRAWN BY:	MAP
CHECKED BY:	BB
DATE:	9/25/2018
REVISED:	-

ROCK DESCRIPTION KEY

Fire Station #3 and #22 Bay Replacement
201 W. 30th Street / 5309 East Riverside Drive
Austin, Texas

FIGURE

A-3

PLOTTED: 09/25/2018 01:52 PM BY: MPalmer
OFFICE FILTER: AUSTIN
PROJECT NUMBER: 20190836.001A [LEGEND 3 (ROCK DESC KEY)]
gINT FILE: Klf_gint_master_2017
gINT TEMPLATE: E:\KLF_STANDARD_GINT_LIBRARY_2017.GLB

Date Begin - End:	8/29/2018	**Drilling Company:**	Texas Geo Bore		**BORING LOG B-1**
Logged By:	J. Miller	**Drill Crew:**	Chris, Joey, Jamel		
Hor.-Vert. Datum:	Not Available	**Drilling Equipment:**	Mobile B-57	**Hammer Type - Drop:**	140 lb. Auto - 30 in.
Plunge:	-90 degrees	**Drilling Method:**	Solid Stem Auger		
Weather:	Sunny, Humid, 99° F	**Exploration Diameter:**	6 in. O.D.		

FIELD EXPLORATION

Latitude: 30.22924°
Longitude: -97.71308°
Surface Condition: Concrete

Approximate Elevation (feet)	Depth (feet)	Lithologic Description	Sample Type	Blow Counts(BC)= Uncorr. Blows/6 in. Pocket Pen(PP)= tsf RQD=%	Recovery (NR=No Recovery)	USCS Symbol	Water Content (%)	Dry Unit Wt. (pcf)	Passing #4 (%)	Passing #200 (%)	Liquid Limit	Plasticity Index (NP=NonPlastic)	Additional Tests/ Remarks
		CONCRETE: 8"											
		Base: crushed limestone: light brown (16")		PP=-									
		Fat CLAY with trace sand (CH): dark brown, stiff to hard, trace calcareous nodules		PP=1.75		CH	24.9	99.7		83	65	46	**Unc. Comp. Str.=** q_u: 2.3 tsf Strain at Failure: 8.8%
				PP=2.0									
-5	5												
		- brown from 6 to 13 feet, ferrous stains below 6 feet		PP=4.5+									
		- trace fine gravel below 8 feet		PP=4.5+									
-10	10												
		- light brown below 13 feet		PP=4.5+			16.2	116.2					**Unc. Comp. Str.=** q_u: 6.4 tsf Strain at Failure: 3.1%
-15	15												
		Poorly Graded GRAVEL with Clay and Sand (GP-GC): fine to coarse-grained, brownish yellow, moist, medium dense to dense		BC=12 10 12		GP-GC	2.3		51	11			
-20	20												
				BC=4 10 12			1.8			5.4			
-25	25												
				BC=4 4 6			1.8			5.1			
-30	30												
		- wet below 33.5 feet, silty sand seam		BC=5 13 24			7.0			13			

KLEINFELDER
Bright People. Right Solutions.

PROJECT NO.:	20190836
DRAWN BY:	MAP
CHECKED BY:	OB
DATE:	9/25/2018
REVISED:	-

BORING LOG B-1

City of Austin Fire Stations
Fire Station #22
5309 E. Riverside Drive
Austin, Texas

FIGURE

B-1

PLOTTED: 10/24/2018 12:52 PM BY: BBaugh
OFFICE FILTER: AUSTIN
PROJECT NUMBER: 20190836.001A [_KLF_BORING/TEST PIT SOIL LOG]
gINT FILE: Klf_gint_master_2017
gINT TEMPLATE: E:KLF_STANDARD_GINT_LIBRARY_2017.GLB

Date Begin - End:	8/29/2018	**Drilling Company:**	Texas Geo Bore		**BORING LOG B-1**
Logged By:	J. Miller	**Drill Crew:**	Chris, Joey, Jamel		
Hor.-Vert. Datum:	Not Available	**Drilling Equipment:**	Mobile B-57	**Hammer Type - Drop:**	140 lb. Auto - 30 in.
Plunge:	-90 degrees	**Drilling Method:**	Solid Stem Auger		
Weather:	Sunny, Humid, 99° F	**Exploration Diameter:**	6 in. O.D.		

FIELD EXPLORATION

Latitude: 30.22924°
Longitude: -97.71308°
Surface Condition: Concrete

LABORATORY RESULTS

Approximate Elevation (feet)	Depth (feet)	Graphical Log	Lithologic Description	Sample Type	Blow Counts(BC)= Uncorr. Blows/6 in. Pocket Pen(PP)= tsf RQD=%	Recovery (NR=No Recovery)	USCS Symbol	Water Content (%)	Dry Unit Wt. (pcf)	Passing #4 (%)	Passing #200 (%)	Liquid Limit	Plasticity Index (NP=NonPlastic)	Additional Tests/ Remarks
			Fat CLAY (CH): gray and reddish brown, moist, hard, with ferrous stains											
			Weathered SHALE: dark gray, weak, weakly cemented, laminated		PP=4.5+			18.5	106.9					**Unc. Comp. Str.=** q_u: 2.5 tsf Strain at Failure: 6.5%
-40	40													
					PP=4.5+			16.1	108.4					**Unc. Comp. Str.=** q_u: 11.2 tsf Strain at Failure: 5.0%
-45	45													
					PP=4.5+			14.6			96	58	41	
-50	50													
					PP=4.5+									
-55	55													
					BC=13 50/5½"			13.5			96			
-60	60													
-65	65													

The boring was terminated at approximately 59.5 ft. below ground surface. The boring was backfilled with cuttings and patched with concrete at the surface on August 29, 2018.

GROUNDWATER LEVEL INFORMATION:
☒ Groundwater was observed at approximately 33.5 ft. below ground surface during drilling.
GENERAL NOTES:
The exploration location and elevation are approximate and were estimated by Kleinfelder.

KLEINFELDER
Bright People. Right Solutions.

PROJECT NO.:	20190836
DRAWN BY:	MAP
CHECKED BY:	OB
DATE:	9/25/2018
REVISED:	-

BORING LOG B-1

City of Austin Fire Stations
Fire Station #22
5309 E. Riverside Drive
Austin, Texas

FIGURE
B-1

PLOTTED: 10/24/2018 12:52 PM BY: BBaugh
OFFICE FILTER: AUSTIN
PROJECT NUMBER: 20190836.001A [__KLF_BORING/TEST PIT SOIL LOG]
gINT FILE: Klf_gint_master_2017
gINT TEMPLATE: E:KLF_STANDARD_GINT_LIBRARY_2017.GLB

Date Begin - End:	8/30/2018	**Drilling Company:**	Texas Geo Bore		**BORING LOG B-2**
Logged By:	J. Miller	**Drill Crew:**	Chris, Joey, Jamel		
Hor.-Vert. Datum:	Not Available	**Drilling Equipment:**	Mobile B-57	**Hammer Type - Drop:**	140 lb. Auto - 30 in.
Plunge:	-90 degrees	**Drilling Method:**	Solid Stem Auger		
Weather:	Humid, 90° F	**Exploration Diameter:**	6 in. O.D.		

FIELD EXPLORATION

Latitude: 30.22931°
Longitude: -97.71304°
Surface Condition: Concrete

LABORATORY RESULTS

Approximate Elevation (feet)	Depth (feet)	Graphical Log	Lithologic Description	Sample Type	Blow Counts(BC)= Uncorr. Blows/6 in. Pocket Pen(PP)= tsf RQD=%	Recovery (NR=No Recovery)	USCS Symbol	Water Content (%)	Dry Unit Wt. (pcf)	Passing #4 (%)	Passing #200 (%)	Liquid Limit	Plasticity Index (NP=NonPlastic)	Additional Tests/ Remarks
			CONCRETE with Rebar: 6"											
			Base: crushed limestone: light brown (18")											
			Fat CLAY with Sand (CH): dark brown, moist, very stiff to hard, trace calcareous nodules		PP=4.5+			17.4			79			
					PP=4.5+									
-5	5		- brown below 6 feet		PP=4.5+		CH	14.3	113.7		78	62	43	**Unc. Comp. Str.=** q_u: 10.2 tsf Strain at Failure: 8.3%
					PP=4.5+									
-10	10													
					PP=4.0			14.2			72			
-15	15													
			Poorly Graded GRAVEL with Clay and Sand (GP-GC): fine to coarse-grained, light gray, moist, loose to medium dense, trace calcareous nodules		BC=5 7 6									
-20	20													
					BC=3 7 12			1.4			2.5			
-25	25													
					BC=2 3 5									
-30	30													
			- medium to coarse-grained sand		BC=4 2 4			3.0			8.0			

KLEINFELDER
Bright People. Right Solutions.

PROJECT NO.:	20190836
DRAWN BY:	MAP
CHECKED BY:	OB
DATE:	9/25/2018
REVISED:	-

BORING LOG B-2

City of Austin Fire Stations
Fire Station #22
5309 E. Riverside Drive
Austin, Texas

FIGURE

B-2

PLOTTED: 10/24/2018 12:53 PM BY: BBaugh
OFFICE FILTER: AUSTIN
PROJECT NUMBER: 20190836.001A [__KLF_BORING/TEST PIT SOIL LOG]
gINT FILE: Klf_gint_master_2017
gINT TEMPLATE: E:KLF_STANDARD_GINT_LIBRARY_2017.GLB

Date Begin - End:	8/30/2018	**Drilling Company:**	Texas Geo Bore		**BORING LOG B-2**
Logged By:	J. Miller	**Drill Crew:**	Chris, Joey, Jamel		
Hor.-Vert. Datum:	Not Available	**Drilling Equipment:**	Mobile B-57	**Hammer Type - Drop:**	140 lb. Auto - 30 in.
Plunge:	-90 degrees	**Drilling Method:**	Solid Stem Auger		
Weather:	Humid, 90° F	**Exploration Diameter:**	6 in. O.D.		

FIELD EXPLORATION

Latitude: 30.22931°
Longitude: -97.71304°
Surface Condition: Concrete

LABORATORY RESULTS

Approximate Elevation (feet)	Depth (feet)	Graphical Log	Lithologic Description	Sample Type	Blow Counts(BC)= Uncorr. Blows/6 in. Pocket Pen(PP)= tsf RQD=%	Recovery (NR=No Recovery)	USCS Symbol	Water Content (%)	Dry Unit Wt. (pcf)	Passing #4 (%)	Passing #200 (%)	Liquid Limit	Plasticity Index (NP=NonPlastic)	Additional Tests/ Remarks
			Weathered SHALE: dark gray, weak, weakly cemented, laminated		PP=4.5+									
-40	40													
					PP=4.5+			16.7			96	W	65	46
-45	45													
					PP=4.5+									
-50	50													
			- gray below 53 feet		PP=4.5+			15.2	115.5					**Unc. Comp. Str.=** q_u: 7.5 tsf Strain at Failure: 4.5%
-55	55													
					BC=50/6" PP=4.5+									
-60	60													
-65	65													

The boring was terminated because of practical auger refusal (↑) at approximately 59 ft. below ground surface. The boring was backfilled with cuttings and patched with concrete at the surface on August 30, 2018.

GROUNDWATER LEVEL INFORMATION:
Groundwater was not observed during drilling or after completion.
GENERAL NOTES:
The exploration location and elevation are approximate and were estimated by Kleinfelder.

KLEINFELDER
Bright People. Right Solutions.

PROJECT NO.:	20190836
DRAWN BY:	MAP
CHECKED BY:	OB
DATE:	9/25/2018
REVISED:	-

BORING LOG B-2

City of Austin Fire Stations
Fire Station #22
5309 E. Riverside Drive
Austin, Texas

FIGURE
B-2

PLOTTED: 10/24/2018 12:53 PM BY: BBaugh
OFFICE FILTER: AUSTIN
PROJECT NUMBER: 20190836.001A [_KLF_BORING/TEST PIT SOIL LOG]
gINT FILE: Klf_gint_master_2017
gINT TEMPLATE: E:KLF_STANDARD_GINT_LIBRARY_2017.GLB

Date Begin - End:	8/28/2018 - 8/29/2018	**Drilling Company:**	Texas Geo Bore		**BORING LOG B-3**
Logged By:	J. Miller	**Drill Crew:**	Chris, Joey, Jamel		
Hor.-Vert. Datum:	Not Available	**Drilling Equipment:**	Mobile B-57	**Hammer Type - Drop:**	140 lb. Auto - 30 in.
Plunge:	-90 degrees	**Drilling Method:**	Solid Stem Auger		
Weather:	Sunny, Humid, 99° F	**Exploration Diameter:**	6 in. O.D.		

FIELD EXPLORATION

Latitude: 30.22948°
Longitude: -97.71323°
Surface Condition: Grass

LABORATORY RESULTS

Approximate Elevation (feet)	Depth (feet)	Graphical Log	Lithologic Description	Sample Type	Blow Counts(BC)= Uncorr. Blows/6 in. Pocket Pen(PP)= tsf RQD=%	Recovery (NR=No Recovery)	USCS Symbol	Water Content (%)	Dry Unit Wt. (pcf)	Passing #4 (%)	Passing #200 (%)	Liquid Limit	Plasticity Index (NP=NonPlastic)	Additional Tests/ Remarks
			Lean CLAY (CL): dark brown, hard, trace calcareous nodules		PP=4.5+									
			- trace fine-grained gravel and calcareous nodules below 2 feet, brown		PP=4.5+			12.6						
			Fat CLAY (CH): trace fine-grained gravel and calcareous nodules, yellowish brown, hard		PP=4.5+									
-5	5				PP=4.5+									
					PP=4.5+			12.5	116.3					**Unc. Comp. Str.=** q_u: 9.8 tsf Strain at Failure: 4.0%
-10	10													
					PP=4.5+									
-15	15		**Well-Graded SAND with Silt and Gravel (SW-SM)**: fine to coarse-grained, light brown, medium dense to dense, weakly cemented, trace calcareous nodules											
					BC=13 13 12									
-20	20													
					BC=10 17 18			1.4			6.4			
-25	25													
					BC=4 8 13		SW-SM	2.9		61	6.8			
-30	30													
∇			- wet below 34 feet		BC=3 3 14		SW-SM	3.6		68	12			

KLEINFELDER
Bright People. Right Solutions.

PROJECT NO.:	20190836
DRAWN BY:	MAP
CHECKED BY:	OB
DATE:	9/25/2018
REVISED:	-

BORING LOG B-3

City of Austin Fire Stations
Fire Station #22
5309 E. Riverside Drive
Austin, Texas

FIGURE

B-3

PLOTTED: 10/24/2018 12:54 PM BY: BBaugh
OFFICE FILTER: AUSTIN
PROJECT NUMBER: 20190836.001A [_KLF_BORING/TEST PIT SOIL LOG]
gINT FILE: Klf_gint_master_2017 gINT TEMPLATE: E:KLF_STANDARD_GINT_LIBRARY_2017.GLB

Date Begin - End:	8/28/2018 - 8/29/2018	**Drilling Company:**	Texas Geo Bore		**BORING LOG B-3**
Logged By:	J. Miller	**Drill Crew:**	Chris, Joey, Jamel		
Hor.-Vert. Datum:	Not Available	**Drilling Equipment:**	Mobile B-57	**Hammer Type - Drop:**	140 lb. Auto - 30 in.
Plunge:	-90 degrees	**Drilling Method:**	Solid Stem Auger		
Weather:	Sunny, Humid, 99° F	**Exploration Diameter:**	6 in. O.D.		

FIELD EXPLORATION

Latitude: 30.22948°
Longitude: -97.71323°
Surface Condition: Grass

LABORATORY RESULTS

Approximate Elevation (feet)	Depth (feet)	Graphical Log	Lithologic Description	Sample Type	Blow Counts(BC)= Uncorr. Blows/6 in. Pocket Pen(PP)= tsf RQD=%	Recovery (NR=No Recovery)	USCS Symbol	Water Content (%)	Dry Unit Wt. (pcf)	Passing #4 (%)	Passing #200 (%)	Liquid Limit	Plasticity Index (NP=NonPlastic)	Additional Tests/ Remarks
			Weathered SHALE: dark gray, weak, weakly cemented, laminated											
					BC=31 38 43									
-40	40													
					PP=4.0			20.4						
-45	45													
					PP=4.5+			19.8	102.6	WWs				**Unc. Comp. Str.=** q_u: 5.9 tsf Strain at Failure: 5.5%
-50	50													
					PP=4.5+									
-55	55													
					PP=4.5+									
-60	60													
-65	65													

The boring was terminated at approximately 60 ft. below ground surface. The boring was backfilled with cuttings and bentonite on August 29, 2018.

GROUNDWATER LEVEL INFORMATION:
▽ Groundwater was observed at approximately 34 ft. below ground surface during drilling.
∿ Seepage was observed at approximately 35 ft. below ground surface during drilling.
GENERAL NOTES:
The exploration location and elevation are approximate and were estimated by Kleinfelder.

KLEINFELDER
Bright People. Right Solutions.

PROJECT NO.:	20190836
DRAWN BY:	MAP
CHECKED BY:	OB
DATE:	9/25/2018
REVISED:	-

BORING LOG B-3

City of Austin Fire Stations
Fire Station #22
5309 E. Riverside Drive
Austin, Texas

FIGURE
B-3

PLOTTED: 10/24/2018 12:54 PM BY: BBaugh
OFFICE FILTER: AUSTIN
PROJECT NUMBER: 20190836.001A [__KLF_BORING/TEST PIT SOIL LOG]
gINT FILE: Klf_gint_master_2017
gINT TEMPLATE: E:KLF_STANDARD_GINT_LIBRARY_2017.GLB

Date Begin - End:	8/27/2018	**Drilling Company:**	Texas Geo Bore		**BORING LOG SB-1**
Logged By:	J. Miller	**Drill Crew:**	Chris, Joey, Dauntez		
Hor.-Vert. Datum:	Not Available	**Drilling Equipment:**	Mobile B-57	**Hammer Type - Drop:**	140 lb. Auto - 30 in.
Plunge:	-90 degrees	**Drilling Method:**	Solid Stem Auger		
Weather:	Sunny, 99° F	**Exploration Diameter:**	6 in. O.D.		

FIELD EXPLORATION

Latitude: 30.29471°
Longitude: -97.73864°
Surface Condition: Concrete

Approximate Elevation (feet)	Depth (feet)	Graphical Log	Lithologic Description	Sample Type	Blow Counts(BC)= Uncorr. Blows/6 in. Pocket Pen(PP)= tsf RQD=%	Recovery (NR=No Recovery)	USCS Symbol	Water Content (%)	Dry Unit Wt. (pcf)	Passing #4 (%)	Passing #200 (%)	Liquid Limit	Plasticity Index (NP=NonPlastic)	Additional Tests/ Remarks
			CONCRETE: 9"											
			Base: Crushed Limestone: light brown, loose (14")		BC=13 8 5									
			Fill: Lean CLAY with Sand and Gravel: brown and light brown, stiff, trace calcareous nodules,		BC=6 5 5			9.0			67	49	32	
			Fill: Fat CLAY: with sand pockets, dark brown, light brown, stiff to hard, with calcium calcareous nodules											
-5	5		**Fat CLAY (CH)**: dark brown, very stilff to hard, with calareous nodules, trace iron nodules		BC=4 6 6									
					PP=4.5									
			- with fine-grained gravel below 8 feet		PP=4.5+			8.8	130.3					**Unc. Comp. Str.=** q_u: 4.2 tsf Strain at Failure: 3.7%
			- light gray from 8 to 13.5 feet											
-10	10													
			- trace sand, calcareous nodules below 13.5 feet		BC=7 5 7									
-15	15		- light gray and light brown from 13.5 to 18 feet											
			- olive brown to dark brown, few calcareous nodules from 18 to 23 feet		PP=2.75									
-20	20		- laminated below 20 feet											
			- dark gray below 23 feet		PP=4.5+			21.4	107.7					**Unc. Comp. Str.=** q_u: 2 tsf Strain at Failure: 3.2%
-25	25													
			LIMESTONE: light gray, very weak to weak rock, highly fractured											
					BC=50/2"									
-30	30		- few shale seams below 30 feet		RQD=66	100%		5.6	140.9					**Unc. Comp. Str.=** q_u: 222.3 tsf Strain at Failure: 3.9%

KLEINFELDER
Bright People. Right Solutions.

PROJECT NO.:	20190836
DRAWN BY:	MAP
CHECKED BY:	OB
DATE:	9/25/2018
REVISED:	-

BORING LOG SB-1

City of Austin Fire Stations
Fire Station #3
201 West 30th Street
Austin, Texas

FIGURE

SB-1

PLOTTED: 10/24/2018 12:55 PM BY: BBaugh
OFFICE FILTER: AUSTIN
PROJECT NUMBER: 20190836.001A [__KLF_BORING/TEST PIT SOIL LOG]
gINT FILE: Klf_gint_master_2017
gINT TEMPLATE: E:KLF_STANDARD_GINT_LIBRARY_2017.GLB

Date Begin - End:	8/27/2018	**Drilling Company:**	Texas Geo Bore		**BORING LOG SB-1**
Logged By:	J. Miller	**Drill Crew:**	Chris, Joey, Dauntez		
Hor.-Vert. Datum:	Not Available	**Drilling Equipment:**	Mobile B-57	**Hammer Type - Drop:**	140 lb. Auto - 30 in.
Plunge:	-90 degrees	**Drilling Method:**	Solid Stem Auger		
Weather:	Sunny, 99° F	**Exploration Diameter:**	6 in. O.D.		

FIELD EXPLORATION

Latitude: 30.29471°
Longitude: -97.73864°
Surface Condition: Concrete

Approximate Elevation (feet)	Depth (feet)	Graphical Log	Lithologic Description	Sample Type	Blow Counts(BC)= Uncorr. Blows/6 in. Pocket Pen(PP)= tsf RQD=%	Recovery (NR=No Recovery)	USCS Symbol	Water Content (%)	Dry Unit Wt. (pcf)	Passing #4 (%)	Passing #200 (%)	Liquid Limit	Plasticity Index (NP=NonPlastic)	Additional Tests/ Remarks
			LIMESTONE: light gray, very weak to weak rock, highly fractured		RQD=17	90%								
-40	40				RQD=25	89%								
-45	45				RQD=55	81%		4.8	145.0					**Unc. Comp. Str.=** q_u: 144.9 tsf Strain at Failure: 2.0%
-50	50													
-55	55													
-60	60													
-65	65													

LABORATORY RESULTS

The boring was terminated at approximately 50 ft. below ground surface. The boring was backfilled with hydrated bentonite chips and patched with concrete at the surface on August 27, 2018.

GROUNDWATER LEVEL INFORMATION:
Groundwater was not observed during drilling or after completion.
GENERAL NOTES:
The exploration location and elevation are approximate and were estimated by Kleinfelder.

KLEINFELDER
Bright People. Right Solutions.

PROJECT NO.:	20190836
DRAWN BY:	MAP
CHECKED BY:	OB
DATE:	9/25/2018
REVISED:	-

BORING LOG SB-1

City of Austin Fire Stations
Fire Station #3
201 West 30th Street
Austin, Texas

FIGURE

SB-1

PLOTTED: 10/24/2018 12:55 PM BY: BBaugh
OFFICE FILTER: AUSTIN
PROJECT NUMBER: 20190836.001A
gINT FILE: Klf_gint_master_2017
gINT TEMPLATE: E:KLF_STANDARD_GINT_LIBRARY_2017.GLB [_KLF_BORING/TEST PIT SOIL LOG]

Date Begin - End:	8/27/2018	**Drilling Company:**	Texas Geo Bore		**BORING LOG SB-2**
Logged By:	J. Miller	**Drill Crew:**	Chris, Joey, Jamel		
Hor.-Vert. Datum:	Not Available	**Drilling Equipment:**	Mobile B-57	**Hammer Type - Drop:**	140 lb. Auto - 30 in.
Plunge:	-90 degrees	**Drilling Method:**	Solid Stem Auger		
Weather:	Hot, Humid, 99° F	**Exploration Diameter:**	6 in. O.D.		

FIELD EXPLORATION

Latitude: 30.29469°
Longitude: -97.73857°
Surface Condition: Concrete

Approximate Elevation (feet)	Depth (feet)	Lithologic Description	Sample Type	Blow Counts(BC)= Uncorr. Blows/6 in. Pocket Pen(PP)= tsf RQD=%	Recovery (NR=No Recovery)	USCS Symbol	Water Content (%)	Dry Unit Wt. (pcf)	Passing #4 (%)	Passing #200 (%)	Liquid Limit	Plasticity Index (NP=NonPlastic)	Additional Tests/ Remarks
		CONCRETE: 6"											
		Base: Crushed Limestone: light brown (14")		BC=3 4 4									
		Lean CLAY with Sand (CL): dark brown, stiff, trace calcium carbonate nodules											
		Fat CLAY (CH): trace fine to coarse-grained gravel, dark brown, stiff to hard, trace calcareous nodules and pockets		BC=3 8 8									
-5	5			BC=4 6 6									
		- with ferrous stains below 6 feet		PP=4.5+									
		- light brown and dark brown, 6 to 13 feet											
		- hard, 6 to 23 feet		PP=4.5+									
-10	10												
		light gray and brown mottled, 13 to 18 feet		PP=4.5+		CH	19.2			77	60	41	
-15	15												
		- dark brown, below 18 feet		PP=4.5+									
		- laminated, 19 to 20 feet											
-20	20												
				PP=4.5+			21.9	100.7					**Unc. Comp. Str.=** q_u: 2.7 tsf Strain at Failure: 6.3%
-25	25												
				RQD=0	42%								
		LIMESTONE: light gray, weak rock, few shale seams											
-30	30			RQD=50	100%								
		- vertical fracture/weathering from 31 to 32 feet											

KLEINFELDER
Bright People. Right Solutions.

PROJECT NO.:	20190836
DRAWN BY:	MAP
CHECKED BY:	OB
DATE:	9/25/2018
REVISED:	-

BORING LOG SB-2

City of Austin Fire Stations
Fire Station #3
201 West 30th Street
Austin, Texas

FIGURE

SB-2

PLOTTED: 10/24/2018 12:56 PM BY: BBaugh
OFFICE FILTER: AUSTIN
PROJECT NUMBER: 20190836.001A [_KLF_BORING/TEST PIT SOIL LOG]
gINT FILE: Klf_gint_master_2017
gINT TEMPLATE: E:KLF_STANDARD_GINT_LIBRARY_2017.GLB

Date Begin - End:	8/27/2018	**Drilling Company:**	Texas Geo Bore		**BORING LOG SB-2**
Logged By:	J. Miller	**Drill Crew:**	Chris, Joey, Jamel		
Hor.-Vert. Datum:	Not Available	**Drilling Equipment:**	Mobile B-57	**Hammer Type - Drop:**	140 lb. Auto - 30 in.
Plunge:	-90 degrees	**Drilling Method:**	Solid Stem Auger		
Weather:	Hot, Humid, 99° F	**Exploration Diameter:**	6 in. O.D.		

FIELD EXPLORATION

Latitude: 30.29469°
Longitude: -97.73857°
Surface Condition: Concrete

LABORATORY RESULTS

Approximate Elevation (feet)	Depth (feet)	Graphical Log	Lithologic Description	Sample Type	Blow Counts(BC)= Uncorr. Blows/6 in. Pocket Pen(PP)= tsf RQD=%	Recovery (NR=No Recovery)	USCS Symbol	Water Content (%)	Dry Unit Wt. (pcf)	Passing #4 (%)	Passing #200 (%)	Liquid Limit	Plasticity Index (NP=NonPlastic)	Additional Tests/ Remarks
			LIMESTONE: light gray, weak rock, few shale seams		RQD=0	40%								
-40	40				RQD=18	100%		4.7	147.6					**Unc. Comp. Str.=** q_u: 186.2 tsf Strain at Failure: 2.0%
-45	45													
-50	50													
-55	55													
-60	60													
-65	65													

The boring was terminated at approximately 45 ft. below ground surface. The boring was backfilled with hydrated bentonite chips and patched with concrete at the surface on August 27, 2018.

GROUNDWATER LEVEL INFORMATION:
Groundwater was not observed during drilling or after completion.
GENERAL NOTES:
The exploration location and elevation are approximate and were estimated by Kleinfelder.

KLEINFELDER
Bright People. Right Solutions.

PROJECT NO.:	20190836
DRAWN BY:	MAP
CHECKED BY:	OB
DATE:	9/25/2018
REVISED:	-

BORING LOG SB-2

City of Austin Fire Stations
Fire Station #3
201 West 30th Street
Austin, Texas

FIGURE
SB-2

PLOTTED: 10/24/2018 12:56 PM BY: BBaugh
OFFICE FILTER: AUSTIN
PROJECT NUMBER: 20190836.001A
gINT FILE: Klf_gint_master_2017
gINT TEMPLATE: E:\KLF_STANDARD_GINT_LIBRARY_2017.GLB [_KLF_BORING/TEST PIT SOIL LOG]

Date Begin - End:	8/28/2018	**Drilling Company:**	Texas Geo Bore		**BORING LOG SB-3**
Logged By:	J. Miller	**Drill Crew:**	Chris, Joey, Jamel		
Hor.-Vert. Datum:	Not Available	**Drilling Equipment:**	Mobile B-57	**Hammer Type - Drop:**	140 lb. Auto - 30 in.
Plunge:	-90 degrees	**Drilling Method:**	Solid Stem Auger		
Weather:	Sunny, Humid, 99° F	**Exploration Diameter:**	6 in. O.D.		

FIELD EXPLORATION

Latitude: 30.29462°
Longitude: -97.73857°
Surface Condition: Concrete

Approximate Elevation (feet)	Depth (feet)	Graphical Log	Lithologic Description	Sample Type	Blow Counts(BC)= Uncorr. Blows/6 in. Pocket Pen(PP)= tsf RQD=%	Recovery (NR=No Recovery)	USCS Symbol	Water Content (%)	Dry Unit Wt. (pcf)	Passing #4 (%)	Passing #200 (%)	Liquid Limit	Plasticity Index (NP=NonPlastic)	Additional Tests/ Remarks
			CONCRETE: 7"											
			Base: Crushed Limestone: light brown (14")		BC=4 5 5									
			Fat CLAY (CH): trace sand, dark brown, hard, trace calcareous nodules		PP=4.5+									
					PP=4.5+									
-5	5													
			Clayey SAND (SC): trace fine-grained gravel, few calcareous nodules, brown		PP=4.5+		SC	6.6			47	47	31	
-10	10													
			Fat CLAY (CH): trace sand, trace gravel, light brown and gray, very stiff to hard		PP=3.5									
-15	15													
			- yellowish brown below 18 feet		PP=3.5		CH	24.4			97	64	45	
-20	20													
					PP=4.5+									
-25	25													
			LIMESTONE: light gray, few shale seams, very weak to weak rock		RQD=31	66%								
-30	30				RQD=78	100%								

KLEINFELDER
Bright People. Right Solutions.

PROJECT NO.:	20190836
DRAWN BY:	MAP
CHECKED BY:	OB
DATE:	9/25/2018
REVISED:	-

BORING LOG SB-3

City of Austin Fire Stations
Fire Station #3
201 West 30th Street
Austin, Texas

FIGURE

SB-3

PLOTTED: 10/24/2018 12:56 PM BY: BBaugh
OFFICE FILTER: AUSTIN
PROJECT NUMBER: 20190836.001A [__KLF_BORING/TEST PIT SOIL LOG]
gINT FILE: Klf_gint_master_2017
gINT TEMPLATE: E:KLF_STANDARD_GINT_LIBRARY_2017.GLB

Date Begin - End:	8/28/2018	**Drilling Company:**	Texas Geo Bore		**BORING LOG SB-3**
Logged By:	J. Miller	**Drill Crew:**	Chris, Joey, Jamel		
Hor.-Vert. Datum:	Not Available	**Drilling Equipment:**	Mobile B-57	**Hammer Type - Drop:**	140 lb. Auto - 30 in.
Plunge:	-90 degrees	**Drilling Method:**	Solid Stem Auger		
Weather:	Sunny, Humid, 99° F	**Exploration Diameter:**	6 in. O.D.		

FIELD EXPLORATION

Latitude: 30.29462°
Longitude: -97.73857°
Surface Condition: Concrete

LABORATORY RESULTS

Approximate Elevation (feet)	Depth (feet)	Graphical Log	Lithologic Description	Sample Type	Blow Counts(BC)= Uncorr. Blows/6 in. Pocket Pen(PP)= tsf RQD=%	Recovery (NR=No Recovery)	USCS Symbol	Water Content (%)	Dry Unit Wt. (pcf)	Passing #4 (%)	Passing #200 (%)	Liquid Limit	Plasticity Index (NP=NonPlastic)	Additional Tests/ Remarks
			LIMESTONE: light gray, few shale seams, very weak to weak rock		RQD=18	92%		6.6	141.0					**Unc. Comp. Str.=** q_u: 61.3 tsf Strain at Failure: 2.3%
-40	40				RQD=36	78%								
-45	45													
-50	50													
-55	55													
-60	60													
-65	65													

The boring was terminated at approximately 45 ft. below ground surface. The boring was backfilled with hydrated bentonite chips and patched with concrete at the surface on August 28, 2018.

GROUNDWATER LEVEL INFORMATION:
Groundwater was not observed during drilling or after completion.
GENERAL NOTES:
The exploration location and elevation are approximate and were estimated by Kleinfelder.

KLEINFELDER
Bright People. Right Solutions.

PROJECT NO.:	20190836
DRAWN BY:	MAP
CHECKED BY:	OB
DATE:	9/25/2018
REVISED:	-

BORING LOG SB-3

City of Austin Fire Stations
Fire Station #3
201 West 30th Street
Austin, Texas

FIGURE

SB-3

PLOTTED: 10/24/2018 12:57 PM BY: BBaugh
OFFICE FILTER: AUSTIN
PROJECT NUMBER: 20190836.001A
gINT FILE: Klf_gint_master_2017
gINT TEMPLATE: E:KLF_STANDARD_GINT_LIBRARY_2017.GLB [_KLF_BORING/TEST PIT SOIL LOG]

Date Begin - End:	9/11/2018	**Drilling Company:**	Kleinfelder	**BORING LOG SB-4**
Logged By:	B. Baugh	**Drill Crew:**	B. Baugh	
Hor.-Vert. Datum:	Not Available	**Drilling Equipment:**	Hand Auger	
Plunge:	-90 degrees	**Drilling Method:**	Hand Auger	
Weather:	Overcast, Light Rain	**Exploration Diameter:**	6 in. O.D.	

FIELD EXPLORATION

Latitude: 30.29456°
Longitude: -97.73882°
Surface Condition: Bare Earth

LABORATORY RESULTS

Approximate Elevation (feet)	Depth (feet)	Graphical Log	Lithologic Description	Sample Type	Blow Counts(BC)= Uncorr. Blows/6 in. Pocket Pen(PP)= tsf RQD=%	Recovery (NR=No Recovery)	USCS Symbol	Water Content (%)	Dry Unit Wt. (pcf)	Passing #4 (%)	Passing #200 (%)	Liquid Limit	Plasticity Index (NP=NonPlastic)	Additional Tests/ Remarks
			Fat CLAY (CH): dark brown, moist, with roots					17.8						
			- with gravel below 2 feet											
			Sandy Lean CLAY (CL): trace gravel, light brown, moist				CL	6.4			68	42	29	
-5	5													
-10	10													
-15	15													
-20	20													
-25	25													
-30	30													

The boring was terminated at approximately 5 ft. below ground surface. The boring was backfilled with hydrated bentonite chips and patched with concrete at the surface on September 11, 2018.

GROUNDWATER LEVEL INFORMATION:
Groundwater was not observed during drilling or after completion.
GENERAL NOTES:
The exploration location and elevation are approximate and were estimated by Kleinfelder.

KLEINFELDER
Bright People. Right Solutions.

PROJECT NO.:	20190836
DRAWN BY:	MAP
CHECKED BY:	OB
DATE:	9/25/2018
REVISED:	-

BORING LOG SB-4

City of Austin Fire Stations
Fire Station #3
201 West 30th Street
Austin, Texas

FIGURE

SB-4

PLOTTED: 10/24/2018 12:57 PM BY: BBaugh
OFFICE FILTER: AUSTIN
PROJECT NUMBER: 20190836.001A
gINT FILE: Klf_gint_master_2017
gINT TEMPLATE: E:KLF_STANDARD_GINT_LIBRARY_2017.GLB [_KLF_BORING/TEST PIT SOIL LOG]

KLEINFELDER

Bright People. Right Solutions.

Appendix B

Analytical Report 600445

for

Kleinfelder - Austin

Project Manager: Orlando Boscan

Fire Station 3 & 22 Reconstruction

20190836.001A

05-OCT-18

Collected By: Client

9701 Harry Hines Blvd
Dallas, TX 75220

Xenco-Houston (EPA Lab Code: TX00122):
Texas (T104704215-18-27), Arizona (AZ0765), Florida (E871002-24), Louisiana (03054)
Oklahoma (2017-142)

Xenco-Dallas (EPA Lab Code: TX01468):
Texas (T104704295-18-17), Arizona (AZ0809), Arkansas (17-063-0)

Xenco-El Paso (EPA Lab Code: TX00127): Texas (T104704221-18-13)
Xenco-Lubbock (EPA Lab Code: TX00139): Texas (T104704219-18-17)
Xenco-Midland (EPA Lab Code: TX00158): Texas (T104704400-18-18)
Xenco-San Antonio (EPA Lab Code: TNI02385): Texas (T104704534-18-4)
Xenco Phoenix (EPA Lab Code: AZ00901): Arizona (AZ0757)
Xenco-Phoenix Mobile (EPA Lab Code: AZ00901): Arizona (AZM757)
Xenco-Atlanta (LELAP Lab ID #04176)
Xenco-Tampa: Florida (E87429)
Xenco-Lakeland: Florida (E84098)

Table of Contents

Cover Page	1
Cover Letter	3
Sample ID Cross Reference	4
Case Narrative	5
Certificate of Analysis (Detailed Report)	6
Explanation of Qualifiers (Flags)	9
LCS / LCSD Recoveries	10
MS / MSD Recoveries	11
Method Duplicate	12
Chain of Custody	13
IOS_COC_114730	15
IOS_Check_List_114730	16
Sample Receipt Conformance Report	17

05-OCT-18

Project Manager: **Orlando Boscan**
Kleinfelder - Austin
1826 Kramer Ln, Suite M

Austin, TX 78758

Reference: XENCO Report No(s): **600445**
Fire Station 3 & 22 Reconstruction
Project Address: ---

Orlando Boscan:

We are reporting to you the results of the analyses performed on the samples received under the project name referenced above and identified with the XENCO Report Number(s) 600445. All results being reported under this Report Number apply to the samples analyzed and properly identified with a Laboratory ID number. Subcontracted analyses are identified in this report with either the NELAC certification number of the subcontract lab in the analyst ID field, or the complete subcontracted report attached to this report.

Unless otherwise noted in a Case Narrative, all data reported in this Analytical Report are in compliance with NELAC standards. The uncertainty of measurement associated with the results of analysis reported is available upon request. Should insufficient sample be provided to the laboratory to meet the method and NELAC Matrix Duplicate and Matrix Spike requirements, then the data will be analyzed, evaluated and reported using all other available quality control measures.

The validity and integrity of this report will remain intact as long as it is accompanied by this letter and reproduced in full, unless written approval is granted by XENCO Laboratories. This report will be filed for at least 5 years in our archives after which time it will be destroyed without further notice, unless otherwise arranged with you. The samples received, and described as recorded in Report No. 600445 will be filed for 45 days, and after that time they will be properly disposed without further notice, unless otherwise arranged with you. We reserve the right to return to you any unused samples, extracts or solutions related to them if we consider so necessary (e.g., samples identified as hazardous waste, sample sizes exceeding analytical standard practices, controlled substances under regulated protocols, etc).

We thank you for selecting XENCO Laboratories to serve your analytical needs. If you have any questions concerning this report, please feel free to contact us at any time.

Respectfully,

Kalei Stout
Laboratory Manager

Recipient of the Prestigious Small Business Administration Award of Excellence in 1994.
Certified and approved by numerous States and Agencies.
A Small Business and Minority Status Company that delivers SERVICE and QUALITY

Houston - Dallas - Midland - San Antonio - Phoenix - Oklahoma - Latin America

Sample Cross Reference 600445

Kleinfelder - Austin, Austin, TX

Fire Station 3 & 22 Reconstruction

Sample Id	Matrix	Date Collected	Sample Depth	Lab Sample Id
SB-2	S	08-27-18 00:00	.5 - 4 ft	600445-001
B-3	S	08-27-18 00:00	2 - 4 ft	600445-002

CASE NARRATIVE

Client Name: Kleinfelder - Austin

Project Name: Fire Station 3 & 22 Reconstruction

Project ID:	*20190836.001A*	Report Date:	*05-OCT-18*
Work Order Number(s):	*600445*	Date Received:	*09/27/2018*

This laboratory is NELAC accredited under the Texas Laboratory Accreditation Program for all the methods, analytes, and matrices reported in this data package except as noted. The data have been reviewed and are technically compliant with the requirements of the methods used, except where noted by the laboratory.

Sample receipt non conformances and comments:

None

Sample receipt non conformances and comments per sample:

None

Certificate of Analytical Results
600445
Kleinfelder - Austin, Austin, TX
Fire Station 3 & 22 Reconstruction

Sample Id: **SB-2** Matrix: Soil Sample Depth: .5 - 4 ft

Lab Sample Id: 600445-001 Date Collected: 08.27.18 00.00 Date Received: 09.27.18 08.20

Analytical Method: Soil pH by EPA 9045C Prep Method:

Analyst: CHD % Moist: Tech: CHD

Seq Number: 3065144 Date Prep:

Prep seq:

Parameter	CAS Number	Result	MQL	SDL	Units	Analysis Date	Flag	Dil Factor
pH	12408-02-5	**10.8**			SU	10.03.18 09:55	K	
Temperature +	TEMP	**21.9**			Deg C	10.03.18 09:55	K	1

Analytical Method: Chloride, Mercuric Nitrate Method by SM4500 Cl-C Prep Method:

Analyst: SDK % Moist: Tech: SDK

Seq Number: 3065358 Date Prep:

Prep seq:

Parameter	CAS Number	Result	MQL	SDL	Units	Analysis Date	Flag	Dil Factor
Chloride	16887-00-6	**4.94**	4.94	1.26	mg/kg	10.03.18 16:00	JK	1

Analytical Method: Sulfate by SW-846 9038 Prep Method:

Analyst: SHT % Moist: Tech: SHT

Seq Number: 3065021 Date Prep:

Prep seq:

Parameter	CAS Number	Result	MQL	SDL	Units	Analysis Date	Flag	Dil Factor
Sulfate	14808-79-8	**331**	49.4	16.5	mg/kg	10.02.18 10:30	K	10

Analytical Method: Soil Resistivity (Saturated) by ASTM G57 Prep Method:

Analyst: TRS % Moist: Tech: TRS

Seq Number: 3065227 Date Prep:

Subcontractor: SUB: TX104704215-18-27 Prep seq:

Parameter	CAS Number	Result	MQL	SDL	Units	Analysis Date	Flag	Dil Factor
Resistivity (as saturated)	RESISTIVITY	**1445**			Ohm-cm	10.03.18 14:00	U	1

Certificate of Analytical Results
600445
Kleinfelder - Austin, Austin, TX
Fire Station 3 & 22 Reconstruction

Sample Id: **B-3** Matrix: Soil Sample Depth: 2 - 4 ft

Lab Sample Id: 600445-002 Date Collected: 08.27.18 00.00 Date Received: 09.27.18 08.20

Analytical Method: Soil pH by EPA 9045C Prep Method:

Analyst: CHD % Moist: Tech: CHD

Seq Number: 3065144 Date Prep:

Prep seq:

Parameter	CAS Number	Result	MQL	SDL	Units	Analysis Date	Flag	Dil Factor
pH	12408-02-5	**8.47**			SU	10.03.18 09:55	K	
Temperature +	TEMP	**22.2**			Deg C	10.03.18 09:55	K	1

Analytical Method: Chloride, Mercuric Nitrate Method by SM4500 Cl-C Prep Method:

Analyst: SDK % Moist: Tech: SDK

Seq Number: 3065358 Date Prep:

Prep seq:

Parameter	CAS Number	Result	MQL	SDL	Units	Analysis Date	Flag	Dil Factor
Chloride	16887-00-6	**2430**	497	127	mg/kg	10.03.18 16:00	K	99

Analytical Method: Sulfate by SW-846 9038 Prep Method:

Analyst: SHT % Moist: Tech: SHT

Seq Number: 3065021 Date Prep:

Prep seq:

Parameter	CAS Number	Result	MQL	SDL	Units	Analysis Date	Flag	Dil Factor
Sulfate	14808-79-8	**20.9**	49.4	16.4	mg/kg	10.02.18 10:30	JK	10

Analytical Method: Soil Resistivity (Saturated) by ASTM G57 Prep Method:

Analyst: TRS % Moist: Tech: TRS

Seq Number: 3065227 Date Prep:

Subcontractor: SUB: TX104704215-18-27 Prep seq:

Parameter	CAS Number	Result	MQL	SDL	Units	Analysis Date	Flag	Dil Factor
Resistivity (as saturated)	RESISTIVITY	**1022**			Ohm-cm	10.03.18 14:00	U	1

Certificate of Analytical Results
600445
Kleinfelder - Austin, Austin, TX
Fire Station 3 & 22 Reconstruction

Sample Id: **3065021-1-BLK** Matrix: Solid Sample Depth:

Lab Sample Id: 3065021-1-BLK Date Collected: Date Received:

Analytical Method: Sulfate by SW-846 9038 Prep Method:

Analyst: SHT % Moist: Tech: SHT

Seq Number: 3065021 Date Prep:

Prep seq:

Parameter	CAS Number	Result	MQL	SDL	Units	Analysis Date	Flag	Dil Factor
Sulfate	14808-79-8	<16.4	49.2	16.4	mg/kg	10.02.18 10:30	U	10

Sample Id: **3065358-1-BLK** Matrix: Solid Sample Depth:

Lab Sample Id: 3065358-1-BLK Date Collected: Date Received:

Analytical Method: Chloride, Mercuric Nitrate Method by SM4500 Cl-C Prep Method:

Analyst: SDK % Moist: Tech: SDK

Seq Number: 3065358 Date Prep:

Prep seq:

Parameter	CAS Number	Result	MQL	SDL	Units	Analysis Date	Flag	Dil Factor
Chloride	16887-00-6	<1.26	4.95	1.26	mg/kg	10.03.18 16:00	U	1

Flagging Criteria

X In our quality control review of the data a QC deficiency was observed and flagged as noted. MS/MSD recoveries were found to be outside of the laboratory control limits due to possible matrix /chemical interference, or a concentration of target analyte high enough to affect the recovery of the spike concentration. This condition could also affect the relative percent difference in the MS/MSD.

B A target analyte or common laboratory contaminant was identified in the method blank. Its presence indicates possible field or laboratory contamination.

D The sample(s) were diluted due to targets detected over the highest point of the calibration curve, or due to matrix interference. Dilution factors are included in the final results. The result is from a diluted sample.

E The data exceeds the upper calibration limit; therefore, the concentration is reported as estimated.

F RPD exceeded lab control limits.

J The target analyte was positively identified below the quantitation limit and above the detection limit.

U Analyte was not detected.

L The LCS data for this analytical batch was reported below the laboratory control limits for this analyte. The department supervisor and QA Director reviewed data. The samples were either reanalyzed or flagged as estimated concentrations.

H The LCS data for this analytical batch was reported above the laboratory control limits. Supporting QC Data were reviewed by the Department Supervisor and QA Director. Data were determined to be valid for reporting.

K Sample analyzed outside of recommended hold time.

JN A combination of the "N" and the "J" qualifier. The analysis indicates that the analyte is "tentatively identified" and the associated numerical value may not be consistent with the amount actually present in the environmental sample.

** Surrogate recovered outside laboratory control limit.

BRL Below Reporting Limit.

RL Reporting Limit

MDL Method Detection Limit **SDL** Sample Detection Limit **LOD** Limit of Detection

PQL Practical Quantitation Limit **MQL** Method Quantitation Limit **LOQ** Limit of Quantitation

DL Method Detection Limit

NC Non-Calculable

SMP Client Sample **BLK** Method Blank

BKS/LCS Blank Spike/Laboratory Control Sample **BKSD/LCSD** Blank Spike Duplicate/Laboratory Control Sample Duplicate

MD/SD Method Duplicate/Sample Duplicate **MS** Matrix Spike **MSD:** Matrix Spike Duplicate

+ NELAC certification not offered for this compound.

***** (Next to analyte name or method description) = Outside XENCO's scope of NELAC accreditation

BS / BSD Recoveries

Project Name: Fire Station 3 & 22 Reconstruction

Work Order #: 600445 **Project ID:** 20190836.001A

Analyst: SDK **Date Prepared:** 10/03/2018 **Date Analyzed:** 10/03/2018

Lab Batch ID: 3065358 **Sample:** 3065358-1-BKS **Batch #:** 1 **Matrix:** Solid

Units: mg/kg

BLANK /BLANK SPIKE / BLANK SPIKE DUPLICATE RECOVERY STUDY

Chloride, Mercuric Nitrate Method by SM4500 Cl-C Analytes	Blank Sample Result [A]	Spike Added [B]	Blank Spike Result [C]	Blank Spike %R [D]	Spike Added [E]	Blank Spike Duplicate Result [F]	Blk. Spk Dup. %R [G]	RPD %	Control Limits %R	Control Limits %RPD	Flag
Chloride	<1.27	49.8	52.3	105	49.5	52.0	105	1	75-125	25	

Analyst: SHT **Date Prepared:** 10/02/2018 **Date Analyzed:** 10/02/2018

Lab Batch ID: 3065021 **Sample:** 3065021-1-BKS **Batch #:** 1 **Matrix:** Solid

Units: mg/kg

BLANK /BLANK SPIKE / BLANK SPIKE DUPLICATE RECOVERY STUDY

Sulfate by SW-846 9038 Analytes	Blank Sample Result [A]	Spike Added [B]	Blank Spike Result [C]	Blank Spike %R [D]	Spike Added [E]	Blank Spike Duplicate Result [F]	Blk. Spk Dup. %R [G]	RPD %	Control Limits %R	Control Limits %RPD	Flag
Sulfate	<16.3	195	192	98	194	192	99	0	80-120	20	

Relative Percent Difference RPD = 200*|(C-F)/(C+F)|
Blank Spike Recovery [D] = 100*(C)/[B]
Blank Spike Duplicate Recovery [G] = 100*(F)/[E]
All results are based on MDL and Validated for QC Purposes

Form 3 - MS / MSD Recoveries

Project Name: Fire Station 3 & 22 Reconstruction

Work Order # : 600445 **Project ID:** 20190836.001A

Lab Batch ID: 3065358 **QC- Sample ID:** 600445-001 S **Batch #:** 1 **Matrix:** Soil

Date Analyzed: 10/03/2018 **Date Prepared:** 10/03/2018 **Analyst:** SDK

Reporting Units: mg/kg

MATRIX SPIKE / MATRIX SPIKE DUPLICATE RECOVERY STUDY

Chloride, Mercuric Nitrate Method by SM4500 Cl-C	Parent Sample Result [A]	Spike Added [B]	Spiked Sample Result [C]	Spiked Sample %R [D]	Spike Added [E]	Duplicate Spiked Sample Result [F]	Spiked Dup. %R [G]	RPD %	Control Limits %R	Control Limits %RPD	Flag
Chloride	4.94	49.4	54.4	100	49.6	47.1	85	14	75-125	25	

Lab Batch ID: 3065021 **QC- Sample ID:** 600337-001 S **Batch #:** 1 **Matrix:** Soil

Date Analyzed: 10/02/2018 **Date Prepared:** 10/02/2018 **Analyst:** SHT

Reporting Units: mg/kg

MATRIX SPIKE / MATRIX SPIKE DUPLICATE RECOVERY STUDY

Sulfate by SW-846 9038 Analytes	Parent Sample Result [A]	Spike Added [B]	Spiked Sample Result [C]	Spiked Sample %R [D]	Spike Added [E]	Duplicate Spiked Sample Result [F]	Spiked Dup. %R [G]	RPD %	Control Limits %R	Control Limits %RPD	Flag
Sulfate	176	198	364	95	195	358	93	2	75-125	20	

Matrix Spike Percent Recovery [D] = 100*(C-A)/B

Matrix Spike Duplicate Percent Recovery [G] = 100*(F-A)/E

Relative Percent Difference RPD = 200*|(C-F)/(C+F)|

ND = Not Detected, J = Present Below Reporting Limit, B = Present in Blank, NR = Not Requested, I = Interference, NA = Not Applicable

N = See Narrative, EQL = Estimated Quantitation Limit, NC = Non Calculable - Sample amount is > 4 times the amount spiked.

Sample Duplicate Recovery

Project Name: Fire Station 3 & 22 Reconstruction

Work Order #: 600445

Lab Batch #: 3065227 **Project ID:** 20190836.001A
Date Analyzed: 10/03/2018 14:00 **Date Prepared:** 10/03/2018 **Analyst:** TRS
QC- Sample ID: 600445-001 D **Batch #:** 1 **Matrix:** Soil
Reporting Units: Ohm-cm

Soil Resistivity (Saturated) by ASTM G57	SAMPLE / SAMPLE DUPLICATE RECOVERY				
Analyte	Parent Sample Result [A]	Sample Duplicate Result [B]	%RPD	RPD Limit	Flag
Resistivity (as saturated)	1446	1446	0	20	U

Lab Batch #: 3065144
Date Analyzed: 10/03/2018 09:55 **Date Prepared:** 10/03/2018 **Analyst:** CHD
QC- Sample ID: 600337-001 D **Batch #:** 1 **Matrix:** Soil
Reporting Units: Deg C

Soil pH by EPA 9045C	SAMPLE / SAMPLE DUPLICATE RECOVERY				
Analyte	Parent Sample Result [A]	Sample Duplicate Result [B]	%RPD	RPD Limit	Flag
Temperature	21.4	22.2	4	25	

Lab Batch #: 3065144
Date Analyzed: 10/03/2018 09:55 **Date Prepared:** 10/03/2018 **Analyst:** CHD
QC- Sample ID: 600337-001 D **Batch #:** 1 **Matrix:** Soil
Reporting Units: SU

Soil pH by EPA 9045C	SAMPLE / SAMPLE DUPLICATE RECOVERY				
Analyte	Parent Sample Result [A]	Sample Duplicate Result [B]	%RPD	RPD Limit	Flag
pH	7.53	7.93	5	20	

Log Difference Log Diff. = Log(Sample Duplicate) - Log(Original Sample)
Spike Relative Difference RPD 200 * | (B-A)/(B+A) |
All Results are based on MDL and validated for QC purposes.

BRL - Below Reporting Limit

Chain of Custody

Work Order No: 600044SD

XENCO LABORATORIES

Houston,TX (281) 240-4200 Dallas,TX (214) 902-0300 San Antonio,TX (210) 509-3334
Midland,TX (432-704-5440) EL Paso,TX (915)585-3443 Lubbock,TX (806)794-1296
Hobbs,NM (575-392-7550) Phoenix,AZ (480-355-0900) Atlanta,GA (770-449-8800) Tampa,FL (813-620-2000)

www.xenco.com Page _____ of _____

Project Manager:	Orlando Boscan	Bill to: (if different)	
Company Name:	Kleinfelder	Company Name:	
Address:	1826 Kramer Lane Suite M	Address:	
City, State ZIP:	Austin, TX 78758	City, State ZIP:	
Phone:	512-926-6650	Email:	Oboscan@Kleinfelder.com

Work Order Comments

Program: UST/PST ☐ **PRP** ☐ **Brownfields** ☐ **RRC** ☐ **Superfund** ☐

State of Project:

Reporting: Level II ☐ Level III ☐ PST/UST ☐ RRP ☐ Level IV ☐

Deliverables: EDD ☐ ADaPT ☐ Other:

Project Name:	Fire Station 3&22 Reconstruction	**Turn Around**	
Project Number:	20190836.001A	Routine	☐
P.O. Number:	20190836.001A	Rush:	
Sampler's Name:	Ben Baugh	Due Date:	

SAMPLE RECEIPT	Temp Blank:	Yes (No)	Wet Ice:	Yes (No)
Temperature (°C):	20.4	Thermometer ID		
Received Intact:	(Yes) No	XDA		
Cooler Custody Seals:	Yes (No) N/A	Correction Factor:	+0.3°	
Sample Custody Seals:	Yes (No) N/A	Total Containers:		

ANALYSIS REQUEST

Sample Identification	Matrix	Date Sampled	Time Sampled	Depth	Number of Containers	Soil Ph		Soi Resisitivity	Chloride Content	Sulfate Content										
SB-2	soil	8/27/2018	N/A	0.5-4ft	2	X		X	X	X										
B-3	soil	27-Aug	N/A	2-4ft	2	X		X	X	X										

Work Order Notes

TAT starts the day recevied by the lab, if received by 4:30pm

Sample Comments

Total 200.7 / 6010 **200.8 / 6020:** 8RCRA 13PPM Texas 11 Al Sb As Ba Be B Cd Ca Cr Co Cu Fe Pb Mg Mn Mo Ni K Se Ag SiO2 Na Sr Tl Sn U V Zn

Circle Method(s) and Metal(s) to be analyzed **TCLP / SPLP 6010**: 8RCRA Sb As Ba Be Cd Cr Co Cu Pb Mn Mo Ni Se Ag Tl U **1631 / 245.1 / 7470 / 7471** : Hg

Notice: Signature of this document and relinquishment of samples constitutes a valid purchase order from client company to Xenco, its affiliates and subcontractors. It assigns standard terms and conditions of service. Xenco will be liable only for the cost of samples and shall not assume any responsibility for any losses or expenses incurred by the client if such losses are due to circumstances beyond the control of Xenco. A minimum charge of $75.00 will be applied to each project and a charge of $5 for each sample submitted to Xenco, but not analyzed. These terms will be enforced unless previously negotiated.

Relinquished by: (Signature)	Received by: (Signature)	Date/Time	Relinquished by: (Signature)	Received by: (Signature)	Date/Time
1 Ben Baugh	[signature]	9/25/18 12m	2		
3 [signature]	FedEx		4 FedEx	Whitney Capps	9/27/18 0820
5			6		

Revised Date 051418 Rev. 2018.1

Final 1.000

XENCO LABORATORIES

Custody Seal / Shipping Record

Client Name: Kleinfelder-Austin

Lab Work Order #: 600445

TRK# 7733 2049 1640

THU - 27 SEP AA
HOT 2DAY

4.0 KIPA

75220
TX-US
DFW

952943 26Sep 12:02 AFWH 547C1/F78C/A17C

Inter-Office Shipment

IOS Number **114730**

Date/Time: 09/27/18 21:57
Lab# From: **Dallas**
Lab# To: **Houston**

Created by: Angelica Martinez
Delivery Priority: Fedex
Air Bill No.: 773345816488

Please send report to: Kalei Stout
Address: 9701 Harry Hines Blvd
E-Mail: kalei.stout@xenco.com

Sample Id	Matrix	Client Sample Id	Sample Collection	Method	Method Name	Lab Due	HT Due	PM	Analytes	Sign
600445-001	S	SB-2	08/27/18 00:00	ASTM G57SAT	Soil Resistivity (Saturated) by ASTM G5	10/03/18	02/23/19	KLS		
600445-002	S	B-3	08/27/18 00:00	ASTM G57SAT	Soil Resistivity (Saturated) by ASTM G5	10/03/18	02/23/19	KLS		

Inter Office Shipment or Sample Comments:

Relinquished By: Angelica Martinez

Date Relinquished: 09/27/2018

Received By: Monica Shakhshir

Date Received: 09/28/2018 09:45

Cooler Temperature: 4.5

XENCO Laboratories

Inter Office Report- Sample Receipt Checklist

Sent To: Houston

IOS #: 114730

Acceptable Temperature Range: 0 - 6 degC
Air and Metal samples Acceptable Range: Ambient
Temperature Measuring device used : HOU-068

Sent By: Angelica Martinez **Date Sent:** 09/27/2018 09:57 PM

Received By: Monica Shakhshir **Date Received:** 09/28/2018 09:45 AM

Sample Receipt Checklist		Comments
#1 *Temperature of cooler(s)?	4.5	
#2 *Shipping container in good condition?	**Yes**	
#3 *Samples received with appropriate temperature?	**Yes**	
#4 *Custody Seals intact on shipping container/ cooler?	**Yes**	
#5 *Custody Seals Signed and dated for Containers/coolers	**Yes**	
#6 *IOS present?	**Yes**	
#7 Any missing/extra samples?	**No**	
#8 IOS agrees with sample label(s)/matrix?	**Yes**	
#9 Sample matrix/ properties agree with IOS?	**Yes**	
#10 Samples in proper container/ bottle?	**Yes**	
#11 Samples properly preserved?	**Yes**	
#12 Sample container(s) intact?	**Yes**	
#13 Sufficient sample amount for indicated test(s)?	**Yes**	
#14 All samples received within hold time?	**Yes**	

*** Must be completed for after-hours delivery of samples prior to placing in the refrigerator**

NonConformance:

Corrective Action Taken:

Nonconformance Documentation

Contact: _____ **Contacted by :** _____ **Date:** _____

Checklist reviewed by: _____ Date: 09/28/2018
Monica Shakhshir

XENCO Laboratories
Prelogin/Nonconformance Report- Sample Log-In

Client: Kleinfelder - Austin

Date/ Time Received: 09/27/2018 08:20:00 AM

Work Order #: 600445

Acceptable Temperature Range: 0 - 6 degC
Air and Metal samples Acceptable Range: Ambient

Temperature Measuring device used : XDA

Sample Receipt Checklist		Comments
#1 *Temperature of cooler(s)?	20.4	
#2 *Shipping container in good condition?	**Yes**	
#3 *Samples received on ice?	**No**	
#4 *Custody Seals intact on shipping container/ cooler?	**No**	
#5 Custody Seals intact on sample bottles?	**N/A**	
#6*Custody Seals Signed and dated?	**N/A**	
#7 *Chain of Custody present?	**Yes**	
#8 Any missing/extra samples?	**No**	
#9 Chain of Custody signed when relinquished/ received?	**Yes**	
#10 Chain of Custody agrees with sample labels/matrix?	**Yes**	
#11 Container label(s) legible and intact?	**Yes**	
#12 Samples in proper container/ bottle?	**Yes**	
#13 Samples properly preserved?	**Yes**	
#14 Sample container(s) intact?	**Yes**	
#15 Sufficient sample amount for indicated test(s)?	**Yes**	
#16 All samples received within hold time?	**Yes**	
#17 Subcontract of sample(s)?	**Yes**	Xenco Stafford Resistivity
#18 Water VOC samples have zero headspace?	**N/A**	

*** Must be completed for after-hours delivery of samples prior to placing in the refrigerator**

Analyst: PH Device/Lot#:

Checklist completed by: Angelica Martinez — Date: 09/27/2018

Checklist reviewed by: Kalei Stout — Date: 09/28/2018

KLEINFELDER

Bright People. Right Solutions.

Appendix C

Important Information about This

Geotechnical-Engineering Report

Subsurface problems are a principal cause of construction delays, cost overruns, claims, and disputes.

While you cannot eliminate all such risks, you can manage them. The following information is provided to help.

The Geoprofessional Business Association (GBA) has prepared this advisory to help you – assumedly a client representative – interpret and apply this geotechnical-engineering report as effectively as possible. In that way, clients can benefit from a lowered exposure to the subsurface problems that, for decades, have been a principal cause of construction delays, cost overruns, claims, and disputes. If you have questions or want more information about any of the issues discussed below, contact your GBA-member geotechnical engineer. Active involvement in the Geoprofessional Business Association exposes geotechnical engineers to a wide array of risk-confrontation techniques that can be of genuine benefit for everyone involved with a construction project.

Geotechnical-Engineering Services Are Performed for Specific Purposes, Persons, and Projects

Geotechnical engineers structure their services to meet the specific needs of their clients. A geotechnical-engineering study conducted for a given civil engineer will not likely meet the needs of a civil-works constructor or even a different civil engineer. Because each geotechnical-engineering study is unique, each geotechnical-engineering report is unique, prepared *solely* for the client. *Those who rely on a geotechnical-engineering report prepared for a different client can be seriously misled*. No one except authorized client representatives should rely on this geotechnical-engineering report without first conferring with the geotechnical engineer who prepared it. *And no one – not even you – should apply this report for any purpose or project except the one originally contemplated.*

Read this Report in Full

Costly problems have occurred because those relying on a geotechnical-engineering report did not read it *in its entirety*. Do not rely on an executive summary. Do not read selected elements only. *Read this report in full.*

You Need to Inform Your Geotechnical Engineer about Change

Your geotechnical engineer considered unique, project-specific factors when designing the study behind this report and developing the confirmation-dependent recommendations the report conveys. A few typical factors include:

- the client's goals, objectives, budget, schedule, and risk-management preferences;
- the general nature of the structure involved, its size, configuration, and performance criteria;
- the structure's location and orientation on the site; and
- other planned or existing site improvements, such as retaining walls, access roads, parking lots, and underground utilities.

Typical changes that could erode the reliability of this report include those that affect:

- the site's size or shape;
- the function of the proposed structure, as when it's changed from a parking garage to an office building, or from a light-industrial plant to a refrigerated warehouse;
- the elevation, configuration, location, orientation, or weight of the proposed structure;
- the composition of the design team; or
- project ownership.

As a general rule, *always* inform your geotechnical engineer of project changes – even minor ones – and request an assessment of their impact. *The geotechnical engineer who prepared this report cannot accept responsibility or liability for problems that arise because the geotechnical engineer was not informed about developments the engineer otherwise would have considered.*

This Report May Not Be Reliable

Do not rely on this report if your geotechnical engineer prepared it:

- for a different client;
- for a different project;
- for a different site (that may or may not include all or a portion of the original site); or
- before important events occurred at the site or adjacent to it; e.g., man-made events like construction or environmental remediation, or natural events like floods, droughts, earthquakes, or groundwater fluctuations.

Note, too, that it could be unwise to rely on a geotechnical-engineering report whose reliability may have been affected by the passage of time, because of factors like changed subsurface conditions; new or modified codes, standards, or regulations; or new techniques or tools. *If your geotechnical engineer has not indicated an "apply-by" date on the report, ask what it should be*, and, in general, *if you are the least bit uncertain* about the continued reliability of this report, contact your geotechnical engineer before applying it. A minor amount of additional testing or analysis – if any is required at all – could prevent major problems.

Most of the "Findings" Related in This Report Are Professional Opinions

Before construction begins, geotechnical engineers explore a site's subsurface through various sampling and testing procedures. *Geotechnical engineers can observe actual subsurface conditions only at those specific locations where sampling and testing were performed*. The data derived from that sampling and testing were reviewed by your geotechnical engineer, who then applied professional judgment to form opinions about subsurface conditions throughout the site. Actual sitewide-subsurface conditions may differ – maybe significantly – from those indicated in this report. Confront that risk by retaining your geotechnical engineer to serve on the design team from project start to project finish, so the individual can provide informed guidance quickly, whenever needed.

This Report's Recommendations Are Confirmation-Dependent

The recommendations included in this report – including any options or alternatives – are confirmation-dependent. In other words, *they are not final*, because the geotechnical engineer who developed them relied heavily on judgment and opinion to do so. Your geotechnical engineer can finalize the recommendations *only after observing actual subsurface conditions* revealed during construction. If through observation your geotechnical engineer confirms that the conditions assumed to exist actually do exist, the recommendations can be relied upon, assuming no other changes have occurred. *The geotechnical engineer who prepared this report cannot assume responsibility or liability for confirmation-dependent recommendations if you fail to retain that engineer to perform construction observation*.

This Report Could Be Misinterpreted

Other design professionals' misinterpretation of geotechnical-engineering reports has resulted in costly problems. Confront that risk by having your geotechnical engineer serve as a full-time member of the design team, to:

- confer with other design-team members,
- help develop specifications,
- review pertinent elements of other design professionals' plans and specifications, and
- be on hand quickly whenever geotechnical-engineering guidance is needed.

You should also confront the risk of constructors misinterpreting this report. Do so by retaining your geotechnical engineer to participate in prebid and preconstruction conferences and to perform construction observation.

Give Constructors a Complete Report and Guidance

Some owners and design professionals mistakenly believe they can shift unanticipated-subsurface-conditions liability to constructors by limiting the information they provide for bid preparation. To help prevent the costly, contentious problems this practice has caused, include the complete geotechnical-engineering report, along with any attachments or appendices, with your contract documents, *but be certain to note conspicuously that you've included the material for informational purposes only*. To avoid misunderstanding, you may also want to note that "informational purposes" means constructors have no right to rely on the interpretations, opinions, conclusions, or recommendations in the report, but they may rely on the factual data relative to the specific times, locations, and depths/elevations referenced. Be certain that constructors know they may learn about specific project requirements, including options selected from the report, *only* from the design drawings and specifications. Remind constructors that they may perform their own studies if they want to, and *be sure to allow enough time* to permit them to do so. Only then might you be in a position to give constructors the information available to you, while requiring them to at least share some of the financial responsibilities stemming from unanticipated conditions. Conducting prebid and preconstruction conferences can also be valuable in this respect.

Read Responsibility Provisions Closely

Some client representatives, design professionals, and constructors do not realize that geotechnical engineering is far less exact than other engineering disciplines. That lack of understanding has nurtured unrealistic expectations that have resulted in disappointments, delays, cost overruns, claims, and disputes. To confront that risk, geotechnical engineers commonly include explanatory provisions in their reports. Sometimes labeled "limitations," many of these provisions indicate where geotechnical engineers' responsibilities begin and end, to help others recognize their own responsibilities and risks. *Read these provisions closely*. Ask questions. Your geotechnical engineer should respond fully and frankly.

Geoenvironmental Concerns Are Not Covered

The personnel, equipment, and techniques used to perform an environmental study – e.g., a "phase-one" or "phase-two" environmental site assessment – differ significantly from those used to perform a geotechnical-engineering study. For that reason, a geotechnical-engineering report does not usually relate any environmental findings, conclusions, or recommendations; e.g., about the likelihood of encountering underground storage tanks or regulated contaminants. *Unanticipated subsurface environmental problems have led to project failures*. If you have not yet obtained your own environmental information, ask your geotechnical consultant for risk-management guidance. As a general rule, *do not rely on an environmental report prepared for a different client, site, or project, or that is more than six months old.*

Obtain Professional Assistance to Deal with Moisture Infiltration and Mold

While your geotechnical engineer may have addressed groundwater, water infiltration, or similar issues in this report, none of the engineer's services were designed, conducted, or intended to prevent uncontrolled migration of moisture – including water vapor – from the soil through building slabs and walls and into the building interior, where it can cause mold growth and material-performance deficiencies. Accordingly, ***proper implementation of the geotechnical engineer's recommendations will not of itself be sufficient to prevent moisture infiltration.*** Confront the risk of moisture infiltration by including building-envelope or mold specialists on the design team. ***Geotechnical engineers are not building-envelope or mold specialists.***

GEOPROFESSIONAL BUSINESS ASSOCIATION

Telephone: 301/565-2733
e-mail: info@geoprofessional.org www.geoprofessional.org

Copyright 2016 by Geoprofessional Business Association (GBA). Duplication, reproduction, or copying of this document, in whole or in part, by any means whatsoever, is strictly prohibited, except with GBA's specific written permission. Excerpting, quoting, or otherwise extracting wording from this document is permitted only with the express written permission of GBA, and only for purposes of scholarly research or book review. Only members of GBA may use this document or its wording as a complement to or as an element of a report of any kind. Any other firm, individual, or other entity that so uses this document without being a GBA member could be committing negligent

LAWRENCE
GROUP