ATTACHMENT A

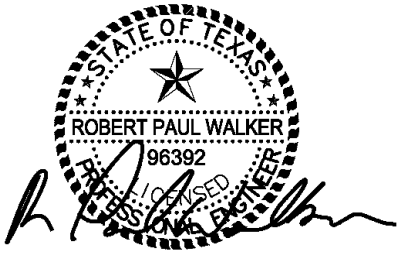

08/31/2011

Texas Registered Engineering
Firm No. F-882

City of Austin
Ullrich Water Treatment Plant

TECHNICAL MEMORANDUM

ON-SITE GENERATION OF SODIUM HYPOCHLORITE (OSGSH) EVALUATION

FINAL
August 2011

carollo
Engineers...Working Wonders With Water®

8911 CAPITAL OF TEXAS HIGHWAY NORTH, SUITE 2200 • AUSTIN, TEXAS 78759 • P. 512.453.5383 • F. 512.453.0101

EXECUTIVE SUMMARY

BACKGROUND

The City of Austin (City) currently uses chlorine gas, either one ton cylinders or bulk storage systems, at its water treatment facilities for disinfection and has accrued a safe operating record of over 80 years without an incident that jeopardized life safety. Given environmental sensitivities, recent concerns associated with the transport of chlorine gas, concerns associated with chlorine supply, and price volatility and the decision to use On-Site Generation of Sodium Hypochlorite (OSGSH) at Water Treatment Plant No. 4; the City decided to evaluate the use of OSGSH for the Davis and Ullrich Water Treatment Plants (WTPs).

EVALUATIONS

Carollo Engineers evaluated the implementation of OSGSH at the Ullrich WTP. This included evaluation to determine how the OSGSH system could be constructed within the existing facilities. Considerations were also given to implementation issues, such as transitioning from the existing chlorine gas to the OSGSH systems, safety concerns, environmental effects, operations and maintenance implications, system reliability, reusing existing equipment, and product deliveries. In addition, an evaluation of the OSGSH manufacturers with recommendations is provided. Finally, the cost to construct the OSGSH system was estimated.

ULLRICH WTP CONCLUSIONS AND RECOMMENDATIONS

The existing chlorine facility at Ullrich has adequate space to accommodate an OSGSH system, however, several significant modifications and additions would be required. Besides the demolition of the existing bulk chlorine system, a building extension, complete with large foundations, would be required to accommodate several sodium hypochlorite storage tanks. The tank storage area would occupy space currently used as an existing parking area/drive located immediately northeast of the chlorine building. Several chlorine distribution lines are in this location and would require replacement and rerouting.

Having adequate space and optimizing the location for the brine tanks is another important consideration. Re-purposing the existing 80,000-gallon scrubber tank was studied. Converting this tank to a brine tank offers the advantage of utilizing an awkward space and frees up the existing loading area. Salt deliveries can be conducted within the existing loading area, minimizing the noise from loading salt. For these reasons, it is recommended

that the existing scrubber tank be converted to a salt storage/brine tank if an OSGSH system is constructed.

Currently, the plant chlorine solution is slightly acidic and is used to clean piping at the lime slurry delivery system. The sodium hypochlorite is basic; therefore, it cannot be used to clean lines. It is recommended that an Acid Magic® cleaning system be used since it is effective and relatively simple and easy to implement compared to other options.

The evaluation determined that OSGSH is feasible at the Ullrich WTP. Due to space constraints and working in and around the existing facilities, the implementation cost is higher when compared to construction at a new WTP. The estimated construction cost at Ullrich is $12,330,000. Based strictly on economic considerations, continuing with chlorine gas using one ton containers or bulk storage systems would be the preferred choice given that it has the lowest capital cost. The existing chlorine gas system has the advantages of the familiarity to operational personnel, a safe operating record, and a proven method for meeting disinfection requirements. Based on the non-economic factors, such as safety and risk reduction, selecting OSGSH offers several advantages over chlorine gas. Assuming the additional cost of constructing and operating an OSGSH system is within the City's budget, this alternative is recommended for consideration based on the following reasons:

- Although the City's facilities using chlorine gas have a long history of safe operation, OSGSH has the lowest potential risk from a life safety perspective because no hazardous chemicals are delivered or used under this alternative.
- The public concern over using an OSGSH system should be less than continuing with chlorine gas.
- Deliveries of hazardous chlorine to the site would be replaced by salt deliveries, which are non-hazardous to humans.
- The availability and price of salt are not as volatile as bulk sodium hypochlorite or chlorine gas. Additionally, salt deliveries are not subject to potential price increases that could affect chlorine costs if proposed legislation to shift carrier liability is ever passed.
- This alternative provides the lowest potential risk to the surrounding environment from a leak.
- A Risk Management Plan (RMP) is not required when using an OSGSH system. However, an RMP for the ammonia system is still necessary.
- OSGSH is a proven, reliable, and effective technology for providing disinfection at water treatment plants.

CITY OF AUSTIN

ULLRICH WATER TREATMENT PLANT

TECHNICAL MEMORANDUM
ON-SITE GENERATION OF SODIUM HYPOCHLORITE (OSGSH)
EVALUATION

TABLE OF CONTENTS

PAGE

1.0 INTRODUCTION 1
- 1.1 Background 1
- 1.2 Purpose 1
- 1.3 Scope 3
- 1.4 Abbreviations 4

2.0 DISINFECTION REQUIREMENTS AND GOALS 5

3.0 ON-SITE GENERATION OF SODIUM HYPOCHLORITE 6
- 3.1 Sodium Hypochlorite 6
- 3.2 OSGSH Process and Description 7
- 3.3 System Components 9
- 3.4 Operations and Maintenance 14
- 3.5 Feed Pump Alternative Analysis 15
- 3.6 Environmental Impacts 24

4.0 EVALUATION OF THE ULLRICH SYSTEM 25
- 4.1 Overall Plant Description 25
- 4.2 Existing Chlorine Facilities 25
- 4.3 Proposed OSGSH System 27
- 4.4 Implementation Issues 30
- 4.5 Associated Lime Feed Upgrades 50
- 4.6 Electrical, Instrumentation, and Control System Requirements 57

5.0 ESTIMATED COST AND SCHEDULE 80
- 5.1 Construction Costs 80
- 5.2 Construction Schedule 81

6.0 CONCLUSIONS AND RECOMMENDATIONS 82
- 6.1 Ullrich WTP Conclusions and Recommendations 82
- 6.2 OSGSH Recommendations 82

LIST OF TABLES

PAGE

Table 1.1 Chlorine Exposure Concentration and Effects 2
Table 1.2 Advantages and Disadvantages of Chlorine Gas Disinfection 2
Table 1.3 Characteristics of Chlorine Gas and Chlorine Liquid 3
Table 2.1 Principal Disinfection Goals and Regulations 6
Table 3.1 Bulk Sodium Hypochlorite Advantages and Disadvantages 7
Table 3.2 Advantages and Disadvantages of OSGSH 8
Table 3.3 Maintenance Activities for OSGSH Systems 14
Table 3.4 Differences and Features of Pumping / Delivery System 23
Table 4.1 Advantages and Disadvantages of Bulk Chlorine Storage 25
Table 4.2 Existing Chlorine Gas Bulk Storage Design Criteria 26
Table 4.3 On-Site Sodium Hypochlorite Generation Evaluation Preliminary Design Criteria 27
Table 4.4 Advantages and Disadvantages of Lime Feed System Alternative 1 53
Table 4.5 Advantages and Disadvantages of Lime Feed System Alternative 2 54
Table 4.6 Advantages and Disadvantages of Lime Feed System Alternative 3 55
Table 4.7 Advantages and Disadvantages of Lime Feed System Alternative 4 56
Table 4.8 Advantages and Disadvantages of Lime Feed System Alternative 5 57
Table 4.9 Proposed Process/Mechanical and HVAC Loads for On-Site Chlorine Generation System 57
Table 4.10 Proposed Type of Various Instrumentation and Control System Equipment 76
Table 4.11 Proposed Distributed Control System Design 77
Table 4.12 Proposed Field Control Station Design 78
Table 4.13 Proposed Type of Control System for each Major Process Equipment/System 79
Table 5.1 Opinion of Probable Construction Costs [1] 81

LIST OF FIGURES

Figure 3.1 On-Site Hypochlorite Generation System Process Flow Diagram 11
Figure 3.2 OSGSH Pumped Loop Metering System 19
Figure 3.3 Sodium Hypochlorite Pumping – Peristaltic Metering Pump System 21
Figure 4.1a Ullrich WTP – Sodium Hypochlorite Generation Process Flow Diagram (9,000-ppd System) 31
Figure 4.2a Ullrich WTP – Chlorine Handling Building Plan 35
Figure 4.2b Ullrich WTP – Chlorine Handling Building Plan 37
Figure 4.3 Ullrich WTP – On-Site Sodium Hypochlorite System Chlorine Handling Facility Layout 39
Figure 4.4 Ullrich WTP – Temporary Sodium Hypochlorite System Layout 45
Figure 4.5 Temporary Sodium Hypochlorite System Process Flow Diagram 47
Figure 4.6 Ullrich WTP – Chlorine Generation Process Design Alternative No. 1 – Overall One-Line Diagram 63
Figure 4.7 Ullrich WTP – Chlorine Generation Process Design Alternative No. 2 – Overall One-Line Diagram 65
Figure 4.8 Ullrich WTP – On-Site Chlorine Generation Process Conceptual Control System Architecture Design Alternative No. 1 73

ON-SITE GENERATION OF SODIUM HYPOCHLORITE EVALUATION

1.0 INTRODUCTION

1.1 Background

A major component of Water Treatment Plant (WTP) operations is the selection of a disinfectant storage and feed system that will provide disinfection of the water. Disinfection is required to achieve pathogen inactivation requirements specified in the drinking water regulations (30 TAC 290 Subchapter F) administered by the Texas Commission on Environmental Quality (TCEQ). The City of Austin's (City's) WTPs currently feed gas chlorine for free chlorine disinfection followed by ammonia to form chloramines. While the use of chlorine gas relies on proven technology that is effective and safe, it requires that large quantities of chlorine, a toxic gas, be delivered and stored on site. Given the environmental, security, cost, and public concerns associated with the use of chlorine gas, the on-site generation of sodium hypochlorite (OSGSH) was evaluated as a potential option for the City's Ullrich WTP.

1.2 Purpose

The purpose of this study is to evaluate the possibility of replacing chlorine gas storage and feed at the City's Ullrich WTP with OSGSH technology.

Historically, chlorine gas has provided the primary source of disinfection at water plants in the United States and throughout Texas. While chlorine gas is a very effective agent for inactivating pathogens in water supplies, it is also a hazardous and dangerous chemical. The effects of chlorine on humans at various concentrations are listed in Table 1.1.

The risks of using chlorine dictate that several safety systems be integrated into the storage and feed system design. These generally include:

- Separate storage and feed rooms
- Well ventilated rooms
- Leak detection and alarms
- Enclosed chlorine off-loading
- Self-contained breathing apparatus (SCBA) and other safety equipment
- Emergency scrubber to convert the contents of a major leak to non-toxic products

Table 1.1	**Chlorine Exposure Concentration and Effects** **TM – On-Site Generation of Sodium Hypochlorite Evaluation** **City of Austin**
Exposure Concentration	**Effects**
1 – 3 ppm [1]	Mild mucous membrane irritation
5 – 15 ppm	Moderate irritation of upper respiratory tract
30 ppm	Immediate chest pain, vomiting, dyspnea, and cough
40 – 60 ppm	Toxic pneumonitis and pulmonary edema
430 ppm	Lethal over 30 minutes
1,000 ppm	Death within a few minutes [2]

Notes:
1. ppm = parts per million
2. Death is possible from asphyxia, shock, reflex spasm in the larynx, or massive pulmonary edema.

Due to these and other safety precautions, the City has successfully used chlorine gas for over 80 years without an incident that threatened the safety of those working at or living near its water facilities.

Several advantages and disadvantages of using chlorine gas are presented in Table 1.2. The disadvantages listed are the primary reasons that lead utilities to replace chlorine gas systems with an OSGSH system.

Table 1.2	**Advantages and Disadvantages of Chlorine Gas Disinfection** **TM – On-Site Generation of Sodium Hypochlorite Evaluation** **City of Austin Water Treatment Plant No. 4**
Advantages	**Disadvantages**
Widely used and long history of successful operation for disinfection	Risk of accidental release of chlorine gas during transport and while handling at the plant [1]
Readily available and economical	Security concerns with respect to bulk chlorine transport
Reliable and effective disinfectant	Chlorine gas is toxic to humans and wildlife
Flexible and reliable monitoring, instrumentation, and automated control systems	Requires a Risk Management Plan (EPA)

Table 1.2 Advantages and Disadvantages of Chlorine Gas Disinfection TM – On-Site Generation of Sodium Hypochlorite Evaluation City of Austin Water Treatment Plant No. 4	
Advantages	**Disadvantages**
Simple equipment and controls	Safety equipment, special training, and significant safety precautions required
Relatively easy to apply and control	Scrubbers will greatly reduce but not entirely eliminate risk
Low power consumption	Price volatility
Lower chemical cost than other alternatives	Severely corrosive chemical
City personnel experienced and trained with storage and feed	
Notes: 1. A study conducted by RMT/Jones & Neuse, Inc. titled, "Hazardous Materials Accidental Release Human Health Risk Study" (June 2005) discusses potential chlorine risks in the City. This study provides an outside assessment that was not analyzed as part of this evaluation.	

In addition, chlorine is transported and stored as a liquefied gas under pressure, which contributes to the possibility of a sudden accidental release.

The primary characteristics of chlorine gas and liquid are listed in Table 1.3.

Table 1.3 Characteristics of Chlorine Gas and Chlorine Liquid TM – On-Site Generation of Sodium Hypochlorite Evaluation City of Austin Water Treatment Plant No. 4	
Chlorine Gas	**Chlorine Liquid**
Specific Gravity: 2.482 (at 32°F and 1 atm)	Specific Gravity: 1.41 (at 68°F and 1 atm)
Density: 0.2006 lb/ft^3 (at 34°F and 1 atm)	Density: 91.67 lb/ft^3 (at 32°F)
Liquefying Point: -30.1°F (-34.5°C at 1 atm)	Freezing Point: -149.8°F (-101°C)

1.3 Scope

This Technical Memorandum (TM) summarizes the disinfection requirements and criteria, describes the OSGSH alternative systems that could be used to achieve those goals, and evaluates its implementation at the Ullrich WTP. This TM also describes the issues and concerns associated with replacing the existing chlorine gas systems with an OSGSH system. Estimated construction costs and schedules are also presented. Conclusions and recommendations are provided.

1.4 Abbreviations

The following is a list of abbreviations used in this TM.

- 316 SS – Type 316 Stainless Steel
- AACE – American Association of Cost Engineers
- AC – Alternating Current
- AWWA – American Water Works Association
- BPV – Backpressure-Regulating Valve
- DC – Direct Current
- DCS – Distributed Control System
- FCS – Filed Control Station
- GHG – Greenhouse Gas
- gpd – gallons per day
- gph – gallons per hour
- gpm – gallons per minute
- HCl – Hydrochloric acid
- HEI – Harutunian Engineering, Inc.
- HID – High Intensity Discharge
- HVAC – Heating, Ventilation, and Air Conditioning
- I&C – Instrumentation and Controls
- IEEE – Institute of Electrical and Electronics Engineers
- IES – Instrumentation Engineering Standards
- LED – Light Emitting Diode
- MCC – Motor Control Center
- mgd – million gallons per day
- NaOCl – Sodium Hypochlorite

- NEC – National Electrical Code
- NFPA – National Fire Protection Association
- NSF – National Science Foundation
- OIU – Operator Interface Unit
- OSGSH – On-Site Generation of Sodium Hypochlorite
- PAC – Powdered Activated Carbon
- PLC – Programmable Logic Controller
- ppm – parts per million
- ppd – pounds per day
- PVC – Polyvinyl chloride
- RMP – Risk Management Plan
- SCBA – Self-Contained Breathing Apparatus
- SOP – Standard Operations Procedure
- TAC – Texas Administrative Code
- TCEQ – Texas Commission on Environmental Quality
- TM – Technical Memorandum
- UFC – Upflow Clarifier
- UPS – Uninterruptible Power Supply
- UV – Ultraviolet
- WTP – Water Treatment Plant

2.0 DISINFECTION REQUIREMENTS AND GOALS

The size, components, and design of the disinfectant storage and feed system are governed by the City of Austin's goals for disinfection and regulatory requirements administered by TCEQ (30 TAC 290 Subchapter F). Additional requirements for safety and operations also dictate how each disinfection system is designed. The principal process-related requirements for disinfection are listed in Table 2.1.

Table 2.1 Principal Disinfection Goals and Regulations TM – On-Site Generation of Sodium Hypochlorite Evaluation City of Austin			
Parameter	**Units**	**TCEQ Regulation**	**City of Austin Goal**
Giardia Inactivation[1]	log	0.5	1.0 @ 8°C 0.75 @ 5°C
Total Chloramine Residual	mg/L	> 0.5	1.8 – 2.2 leaving WTP, >1.0 in distribution
Virus Inactivation[2]	log	2	3.0 @ 5°C 4.0 @ 8°C
Storage of Primary Disinfectant [3]	days	15	15
Feed Equipment Redundancy	---	50% greater than maximum dose	50% greater capacity, minimum of 1 unit in standby

Notes:
1. Assuming 2.5-log removal achieved through filtration.
2. Assuming 2.0-log removal achieved through filtration.
3. Based on maximum dose applied at maximum flow.

3.0 ON-SITE GENERATION OF SODIUM HYPOCHLORITE

3.1 Sodium Hypochlorite

The use of sodium hypochlorite avoids most of the handling and storage hazards associated with gaseous chlorine, while providing similar disinfection capabilities. The following paragraphs discuss the two common ways of using sodium hypochlorite at WTPs.

3.1.1 Commercially Available Bulk Sodium Hypochlorite

Bulk Sodium Hypochlorite is a straw-yellow color solution generally purchased from commercial suppliers at a concentration between 10 and 15 percent. It is a caustic solution with a pH greater than 12. Sodium hypochlorite degrades rapidly during storage to form chlorate and chlorite. Due to health concerns (disruption of blood functions, others), chlorite is a regulated contaminant in drinking water with a maximum contaminant level (MCL) of 1.0 mg/L, and chlorate may be regulated in the future. The rate of bulk solution degradation increases with higher temperature, lower pH, longer storage durations, and higher solution strength. Literature indicates that a 12.5 percent solution can lose up to 25 percent of its strength in 20 days or less (White, *Handbook of Chlorination and Alternative Disinfectants,* 1999). Table 3.1 summarizes advantages and disadvantages associated with the use of bulk sodium hypochlorite.

Table 3.1 Bulk Sodium Hypochlorite Advantages and Disadvantages TM – On Site Generation of Sodium Hypochlorite Evaluation City of Austin	
Advantages	**Disadvantages**
Widely used, proven disinfectant	Corrosive, hazardous, and subject to containment requirements
Eliminates safety concerns associated with the storage of gaseous chlorine (emergency scrubber not required)	By-products include hazardous chlorinated organic compounds (chlorite & chlorate)
Systems are reliable and flexible.	Toxic to aquatic life
Less equipment required than other alternatives	Solution off-gasses in piping and storage, creating safety and operating concerns
Relatively easy to apply and control Risk Management Plan not required	Hypochlorite solutions deteriorate rapidly and the rate of deterioration increases with heat, solution concentration, exposure to sunlight, and the presence of iron or copper in solution.
Low power consumption	High chemical cost
Low capital cost	Austin Water Utility staff not trained or experienced with its use

3.1.2 On-Site Generation of Sodium Hypochlorite

Liquid sodium hypochlorite (NaOCl) generated on site is a diluted liquid bleach solution (0.8 percent sodium hypochlorite). It is produced either through the reaction of chlorine with excess sodium hydroxide, or generated through electrolysis of salt (NaCl) and water. Chlorine gas hydrolyzes in aqueous solution to produce two active ingredients, hypochlorous acid (HOCl) and hypochlorite ion (OCl), and it generally slightly depresses pH in the process. Hypochlorite generated on-site, however, is produced at a pH such that OCl is predominately formed. Unlike the chlorine gas reaction, the hypochlorite reaction in water can slightly increase the pH of the water.

3.2 OSGSH Process and Description

OSGSH systems operate by electrolytically converting a salt brine solution into a weak (0.8 percent) sodium hypochlorite solution according to the following equation:

$$NaCl + H_2O + 2e = NaOCl + H_2$$

(i.e., Salt + Water + Electricity = Sodium Hypochlorite Solution + Hydrogen Gas)

A high quality (solar- or food-grade) salt is delivered to a tank/brine maker. The brine solution is produced by feeding softened water into a brine dissolver (brine tank). The brine

solution flows from the brine tanks through electrolytic cells (generator units) that convert the brine to sodium hypochlorite. Low voltage direct current (DC) is applied to the electrolytic cells to accomplish the brine solution conversion to sodium hypochlorite. This solution is conveyed to storage tanks from which pumps meter it to the point(s) of application. Hydrogen gas is also generated during the electrolytic process, which is diluted below the flame ignition point by blowing air through the storage system. Overall advantages and disadvantages of an OSGSH system are presented in Table 3.2.

Table 3.2 Advantages and Disadvantages of OSGSH
TM – On Site Generation of Sodium Hypochlorite Evaluation
City of Austin

Advantages	Disadvantages
Becoming more commonly used, proven disinfectant	Weak solution strength requires that large volumes of solution be generated and fed
Eliminates safety concerns associated with the storage of gaseous chlorine	By-product is hydrogen gas, which must be properly vented to avoid explosive potential
Eliminates gas chlorine deliveries	Product generated as it is used, requiring alternate means for redundancy
Eliminates product degradation and off-gassing problems associated with bulk hypochlorite	High power usage
Risk Management Plan not required	High capital cost
Equipment is not complex; easy to operate and maintain	Slightly increases sodium levels in finished water by up to 6 mg/L
Easy off-loading reduces operator handling time	Requires discharge of softener regeneration solution
Relatively easy to apply and control	Austin Water Utility staff not experienced or trained to operate equipment
Emergency scrubber not required	Increases truck traffic to WTP due to salt deliveries
	Requires more space than gas chlorine alternatives

3.3 System Components

The major components of an OSGSH system are shown in Figure 3.1. The following list describes each component and its function:

- Salt and Brine Storage. A solar- or food-grade salt must be dissolved to form brine solution to supply the generator cells. The salt is stored in large storage tanks (brine tanks), and softened water is added to form brine solution. Fiberglass-reinforced plastic tanks are typically used, although concrete tanks offer an alternative method of storage. Salt can be delivered using trucks that blow the salt directly into the tanks or dump the salt into a below ground storage tank. Softened water would be maintained at a pre-set level within the tanks to continuously dissolve the salt into a concentrated brine solution.

- Brine Pumps or Eductors. Brine Pump(s) or eductors (contained within the generator skids cells) are used to transfer brine solution from storage to the electrolytic cells. Both methods are proven ways to transfer the brine slurry to the cells. Using pumps adds additional equipment that is subject to repair and maintenance.

- Water Softeners. Finished water must be completely softened to avoid scaling within the generators. Mechanical disk- or electronic-type softeners would be installed, and brine solution from the storage tank would be used to regenerate the softeners. A softener is usually furnished for each sodium hypochlorite generator. The spent solution produced during regeneration would be sent to the sanitary sewer. It is estimated that an average flow of about 1,300 gallons per day of spent solution would be sent to the sanitary sewer (based on an average flow of 85 mgd at a dosage of 4.5 mg/L).

- Heaters. Heaters are used as necessary to maintain an optimal water temperature of the brine solution to improve the efficiency of the downstream generators. The optimum temperature is approximately 65 to 80 degrees Fahrenheit. Water heaters are not required for the City's application since water temperatures are not often below 65 degrees Fahrenheit.

- Chillers. Water chillers are used as needed to maintain an optimal water temperature of the brine solution to improve the efficiency of the downstream generators. As noted above, the optimum temperature is approximately 65 to 80 degrees Fahrenheit. Generators can be operated without chillers if a slight decrease in generator efficiency is acceptable.

THIS PAGE INTENTIONALLY LEFT BLANK

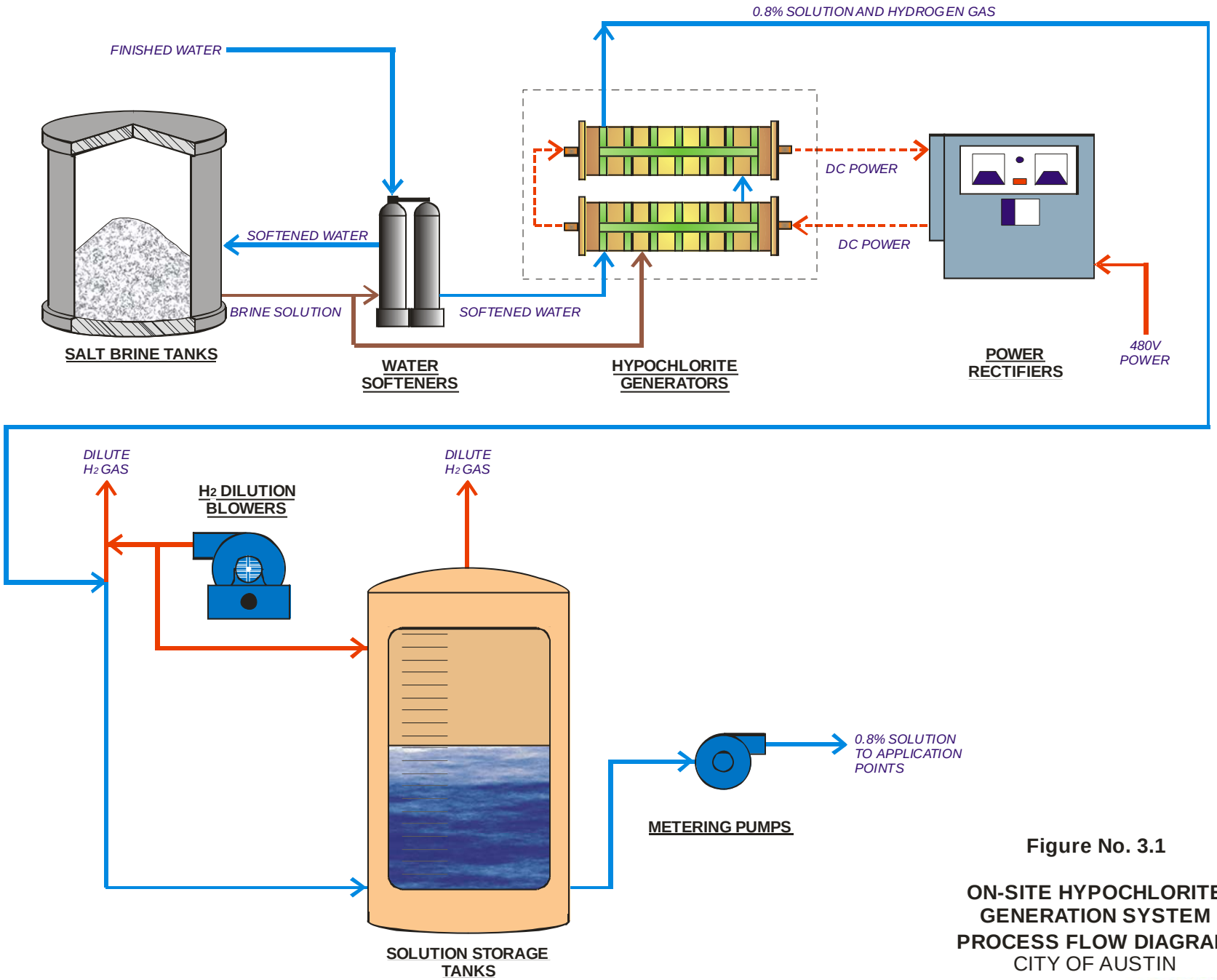

Figure No. 3.1

ON-SITE HYPOCHLORITE GENERATION SYSTEM
PROCESS FLOW DIAGRAM
CITY OF AUSTIN

carollo
Engineers...Working Wonders With Water™

THIS PAGE INTENTIONALLY LEFT BLANK

- Generators (Electrolytic Cells). The conversion of brine to sodium hypochlorite occurs in the generator cells. The cells consist of a series of anode and cathode plates where the sodium hypochlorite solution is generated. Cells can be sized for different capacities and generators up to 2,000 pounds per day (ppd) production can be purchased.

- Rectifiers. The rectifiers convert 480-volt alternating current (AC) to DC used by the generators.

- Hydrogen Dilution Blowers. Blowers are used to continuously dilute the hydrogen gas with air to a concentration level that is below the concentration where the gas could be potentially ignited.

- Tanks. Tanks are used to store the sodium hypochlorite solution. Given the low concentrations of generated product, a relatively large volume of storage is needed. The tanks are sized to store a one-day supply of product. Secondary containment would be installed around the tanks.

- Metering. Two alternatives are used to meter the OSGSH solution to the point of application. Under the first option, metering pumps would draw sodium hypochlorite from the storage tanks and meter the solution directly to the point(s) of application. The pumps would be automatically controlled to provide flow pacing of the solution. Under the second option, chemical duty centrifugal pumps are used to pressurize a feed loop. Flow control valves and flow meters are then used to automatically flow pace the solution from the feed loop to the point(s) of application.

- Redundant Feed Components. Unlike chlorine gas and bulk sodium hypochlorite, an OSGSH system generates product as it is used. As such, a 15-day reserve storage capacity as required by the Texas Commission on Environmental Quality (TCEQ) is not provided. Redundancy is instead provided by installing 15 days of salt storage, a stand-by generator, storing a one-day supply of hypochlorite solution, and providing the ability to receive and dilute bulk hypochlorite in emergencies. This approach is consistent with other WTP facilities operating OSHGS systems and is accepted by TCEQ.

A conceptual layout of the OSGSH system for the Ullrich WTP site is shown in Section 4.0.

3.4 Operations and Maintenance

Operations and maintenance considerations include the ease of use, maintenance requirements, and the operational efficiency. The operational goal is to minimize operational difficulties and maintenance while optimizing efficiency.

An OSGSH system requires little operator intervention since the majority of components are operated automatically. The major components requiring attention are the metering or feed pumps, which can require hose change-outs if tube pumps are used. The low solution strength of the solution generated with this alternative does not present significant corrosion issues, which decreases maintenance requirements relative to commercial sodium hypochlorite and chlorine gas.

Due to scale formation (calcium and magnesium deposits), the electrodes can lose efficiency in the conversion of electrical energy to sodium hypochlorite over time. The rate of build-up is increased by poor functioning of water softening equipment and lower grade salt. However, efficiency is maintained if the electrodes are cleaned on a regular schedule as recommended by the OSGSH system manufacturer. The cleaning procedure involves isolating the generator cells and then circulating muriatic acid through the electrodes to dissolve the scale. This is accomplished by using a portable wash pump and tank. The pump and tank are connected to the cell inlet and outlet, and the pump circulates the muriatic acid solution throughout the cell. After cleaning, it is important that the cell is flushed to ensure acid does not mix with the 0.8-percent bleach solution being generated.

Besides cleaning the electrolytic cells, a limited number of other maintenance activities must be undertaken. Table 3.3 lists these activities. Also, implementing the OSGSH option will require a new training program for Water Utility personnel to familiarize them with operating and maintaining the system.

Table 3.3 Maintenance Activities for OSGSH Systems
TM – On Site Generation of Sodium Hypochlorite Evaluation
City of Austin

Description	Interval	Labor (days)
Clean or check strainers and filters / Changing out Filters	Daily / Monthly	---
Check inlet water pressure	Daily	---
Check unit for alarms by scrolling through alarm history	Daily	---
Inspect all plumbing, cells, tanks for leaks	Daily	---
Test softened water hardness	Weekly	---
Check, clean chiller condenser coils	Weekly	---
Rectifier service	Every 6 months	---

Table 3.3 Maintenance Activities for OSGSH Systems TM – On Site Generation of Sodium Hypochlorite Evaluation City of Austin		
Description	**Interval**	**Labor (days)**
Acid Cleaning of the Electrolytic Cells	Yearly	3 – 4
Cleaning the Brine Tanks	Every 2 years	1 – 2
Cleaning the Sodium Hypochlorite Tanks	Every 2 years	2 – 3
Replacing Diodes	As needed	---

The electrolytic cells manufactured by leading suppliers have a typical lifespan of 8 to 10 years. Warranties are available up to seven years. Presently, the replacement cost for one 750-ppd cell ranges from about $22,000 to $26,000.

The system requires 480-Volt AC electrical power, which is converted to DC power to perform the electrolysis process. For electrical safety, the equipment manufacturers cover and insulate the electrical components. Safety protocol dictates that the system not be operated with equipment covers or panels removed. When maintenance and repairs require removal of covers and panel entry, the system must be disconnected from the power source and locked out and tagged at the main breaker.

3.5 Feed Pump Alternative Analysis

Once produced, the sodium hypochlorite will require distribution to the plant's disinfection application points. The selected pumping or distribution system must meter the NaOCl solution accurately (at the proper dosage), be capable of pacing the chemical at rates commensurate with the WTP flow rate, and pump the solution from the storage tanks to the plant's application points.

The OSGSH system generates a 0.8-percent solution. The weak 0.8-percent solution requires larger volumes of solution to be stored and pumped. For example, a total pumping rate of 93 gallons per minute (gpm) (5,600 gallons per hour (gph)) will be required at the Ullrich WTP to supply an applied dosage of 6.5 mg/L (based on a maximum plant production rate of 167 million gallons per day (mgd)). This is beyond the capacity range of standard metering pumps and requires that multiple pumps be installed in parallel or alternate feed systems be constructed. Pumping options include the use of diaphragm metering pumps, peristaltic or tube pumps, or using a single larger centrifugal pump in a pressurized loop delivery system. These options are described further in the following paragraphs.

3.5.1 Diaphragm Metering Pumps

This option would use diaphragm-metering pumps. This pump type is a positive displacement pump that uses a mechanically actuated diaphragm to pump the solution. These pumps are electric motor driven metering pumps with sturdy drive mechanisms and chemical resistant diaphragms for long life. These pumps are compact and easily serviceable. They are suitable for pumping the 0.8-percent NaOCl solution, but not recommended for the commercial grade NaOCl (12 to 15 percent). The diaphragm pumps are known to lock up/air bind due to off-gassing of the higher strength NaOCl solution.

The metering pump selected would have to be capable of meeting a range of flows depending on the dosage required and the plants' flow rate. The pump would be required to meet average, low, and maximum feed rates. With the 0.8-percent solution, a single application point would typically require a large flow rate (1,500 gph or more). The upward pumping range for a single diaphragm metering pump is limited to about 300 gph. Duplex pumps utilizing dual diaphragm heads are available that would extend the output of a single pump to a maximum flow range of about 600 gph. For the OSGSH system, one individual pump will not meet the larger pumping volumes required for a typical feed point. Using diaphragm pumps would be an option only if several were operated in parallel for each feed point. Installing numerous pumps would add complications and costs to the system.

The use of diaphragm pumps is not recommended for the OSGSH system due to the inability for one pump to have enough capacity to meet the required rates. Numerous pumps with their associated motors, valves, and controls would be required, resulting in a more complex system.

3.5.2 Pressurized Loop Delivery System

This option would use a pressurized loop delivery system. This system consists of a pipeline/loop that circulates flow from the NaOCl storage tanks and back to the tanks as shown in Figure 3.2. The flow is circulated through the feed loop by a chemical-duty centrifugal pump, and a second pump provides backup. Several lines (one for each application point) are connected to and fed from the main loop.

The pressure in the loop is maintained by a pressure-sustaining valve, and any excess pumpage not metered to the point(s) of application is returned to the storage tanks.

The metering is accomplished in this system by a series flow meters in combination with automatic motorized valves that automatically adjust to maintain the flow rate set point. A meter and valve combination are installed for each line that feeds to a plant application point. The control valves used for the system are typically globe-style with high accuracy and large turn-down ratios. Several other elements are required for a complete functioning loop system. These elements include pressure-sustaining valves, pressure relief valves, check valves, isolation valves, and gauges.

The main pump that provides the pressurized flow through the loop system would be capable of meeting the highest sodium hypochlorite demand required by the plant. This flow range is dependent on the dosage required and the plant's flow rate. This main pump would be an end-suction, horizontal centrifugal pump, designed for chemical processing.

Another main component for this system includes a pressure-sustaining valve, which is a self-adjusting, backpressure-regulating valve (BPV) that is designed to open and close automatically to maintain a constant discharge pressure on the main pump. The BPV also smoothes the operation of the flow control valves by maintaining constant pressure to their inlets. Each solution feed line also has a flow meter, which would be installed with 10 straight pipe diameters upstream and downstream to avoid turbulent flow currents that will affect accuracy.

The use of a loop system is a viable option in that it can meet the flow rate demands required by OSGSH. The system has less maintenance with respect to the replacement of hoses that will occur with a peristaltic pump system. This option also requires the fewest amount of pumps, and it would match the system being installed at WTP 4. However, there are numerous flow meters, automatic valves, and components that will require calibration and eventual service.

3.5.3 Peristaltic Metering Pumps

This option would use peristaltic metering pumps as shown in Figure 3.3. This pump type uses a single rotary mechanism and a chemical resistant hose to pump the solution. These pumps are electric motor driven metering pumps with sturdy drives. These pumps are easily serviceable and compact. There are no valves, seats, or seals in contact with the pumping fluid to corrode or wear out.

Peristaltic pumps are suitable for pumping the 0.8-percent NaOCl solution. For pumping sodium hypochlorite, a composite reinforced EDPM or Hypalon hose is recommended. The EDPM is more available and less expensive.

The metering pump selected would be capable of meeting a range of flows depending on the dosage required. Although the normal flow rate would be based on average plant flows and dosage conditions, there will be low and maximum dosage and flow rate conditions. Peristaltic pumps can meet various pumping ranges (for example, a range from 100 gph to 2,500 gph). The larger pump sizes have an upward flow range of 10,000 gph. For a typical application point, one pump will be able to cover the pumping range required between minimum and maximum conditions. This will simplify and reduce the costs to the system.

THIS PAGE INTENTIONALLY LEFT BLANK

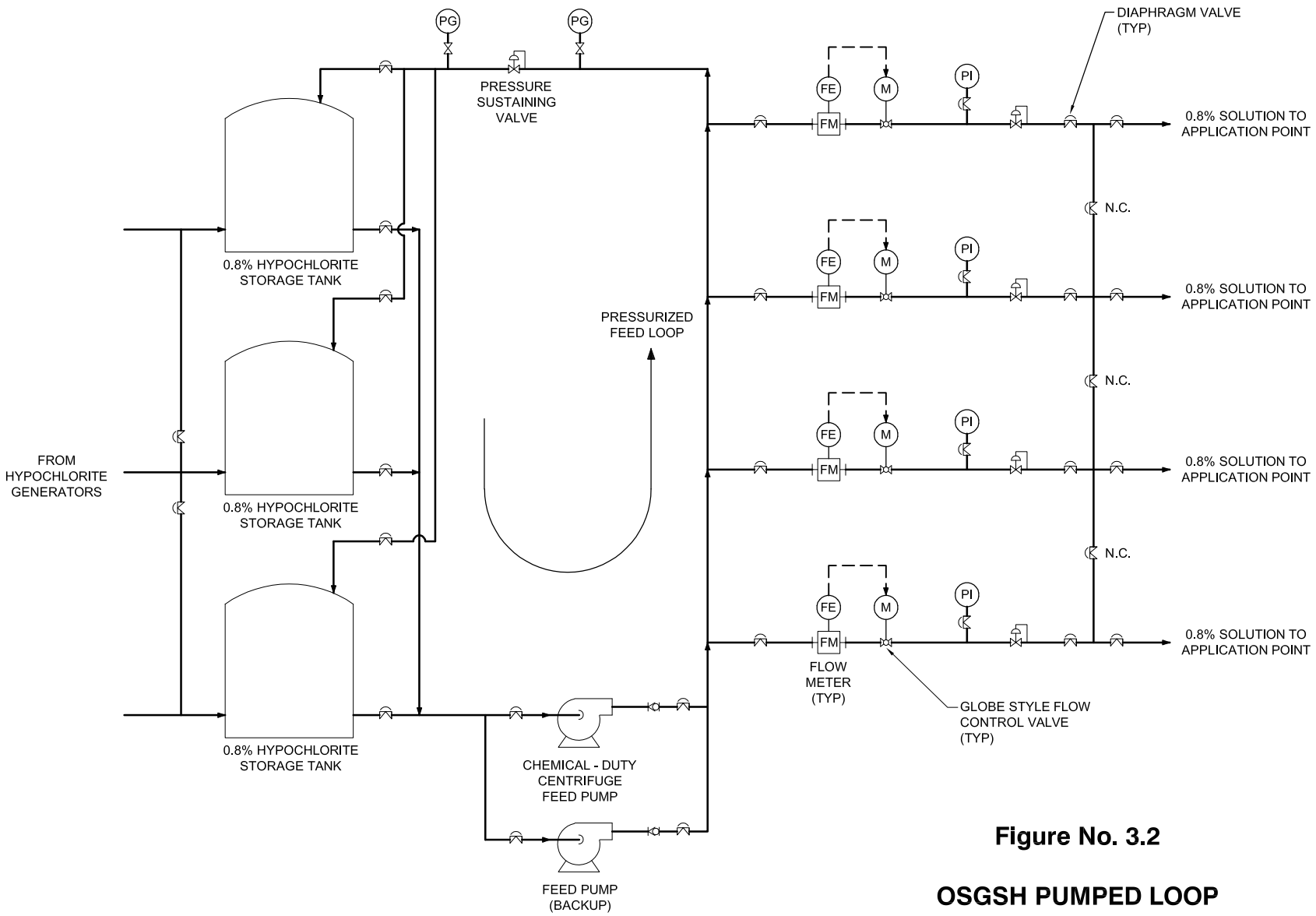

Figure No. 3.2

OSGSH PUMPED LOOP METERING SYSTEM
CITY OF AUSTIN

carollo
Engineers...Working Wonders With Water™

THIS PAGE INTENTIONALLY LEFT BLANK

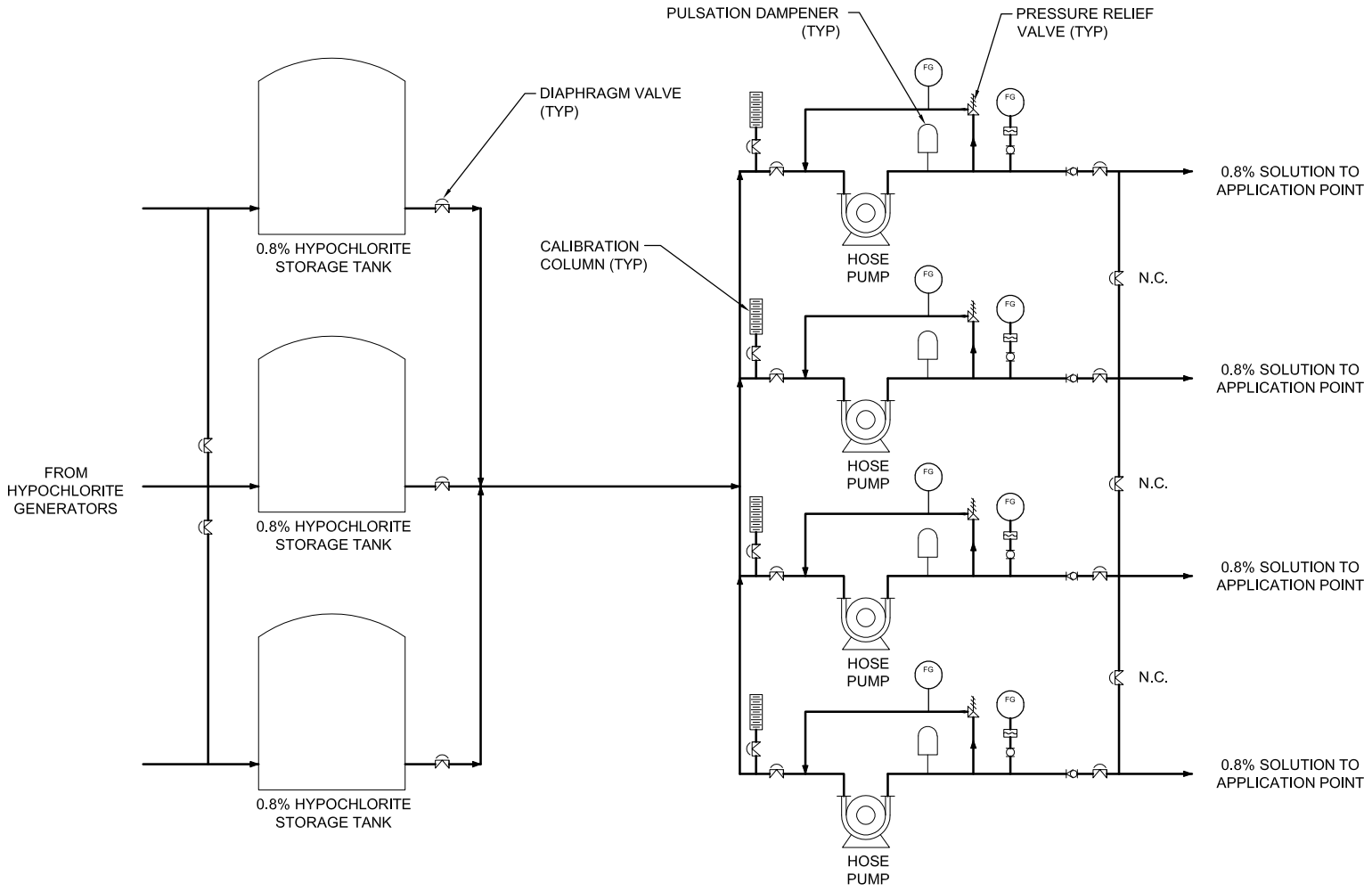

Figure No. 3.3

SODIUM HYPOCHLORITE PUMPING
PERISTALTIC METERING PUMP SYSTEM
CITY OF AUSTIN

carollo
Engineers...Working Wonders With Water™

THIS PAGE INTENTIONALLY LEFT BLANK

3.5.4 Recommended Pumping System

The use of the pumped loop system is the recommended option since this option is less complicated and relatively simple to operate. Additionally, this option requires the fewest number of pumps and is the least expensive system. This type of system has a proven track record at the 70-mgd Point of the Mountain Water Treatment Plant and other facilities. It is also the approach that will be used at WTP 4.

Table 3.4 summarizes the differences and features of the pumping/delivery system options.

Table 3.4 Differences and Features of Pumping / Delivery System
TM – On-Site Generation of Sodium Hypochlorite Evaluation
City of Austin

Criteria Description	Diaphragm	Pumped Loop System	Peristaltic
Max. Pumping Rate (gph) (ea. pump)	300	240,000	10,000
Turn-Down Ratio (ea. pump)	100:1 [1]	N/A [2]	100:1
Accuracy (%)	1	1 – 5 [3]	0.5
Required Maintenance	Low	Meter Calibration	Low (hose replacement)
Required Calibration	Yes	Yes	Yes
Pump Cost (ea.)	$7,000	$9,000	$18,000
Approximate System Cost [4]	$170,000	$100,000	$120,000

Notes:
1. Maximum turn-down combining stroke length and frequency adjustment.
2. For the loop system, the flow rate is adjusted by a valve.
3. Accuracy will vary depending on the accuracy of several control and mechanical components in operation together.
4. Estimated pump, valve, and metering equipment costs only. Based on five pumps/stations and/or feed points.

3.6 Environmental Impacts

Chlorine gas is a hazardous and dangerous chemical that is currently stored at both the Davis and Ullrich WTPs. The OSGSH uses a weak 0.8-percent sodium hypochlorite solution, which is less hazardous. Both the chlorine gas and the sodium hypochlorite can be stored safely. The sodium hypochlorite solution can be stored in a secondary containment facility in the unlikely possibility of a tank failure. The secondary containment would eliminate the risk to the surrounding environment. Chlorine gas uses caustic in a scrubber system to manage the risk associated with a possible chlorine leak.

With respect to Greenhouse Gas (GHG) emissions and to the impact to the atmosphere, the OSGSH system should be compared to generating the chlorine gas off site at a chlor-alkali plant. Both processes require electrical power, which contributes to carbon emissions. Both the on-site and off-site generation processes use rectifiers and generator cells to produce the chlorine gas or the sodium hypochlorite. Both methods use comparable amounts of electrical power.

One by-product of the OSGSH system is hydrogen gas, which is typically diluted and exhausted by air blowers in the interest of safety. However, hydrogen gas is a potential energy source. Now in an early stage of development is a hydrogen economy, which provides ways to use hydrogen gas as an alternative to hydrocarbon fuels. In the future, the hydrogen gas from the OSGSH process could potentially be captured and used as an alternative fuel source for small material handling equipment. While no equipment is currently commercially available to capture and use hydrogen gas at this scale, it is nonetheless a possibility for the future.

4.0 EVALUATION OF THE ULLRICH SYSTEM

4.1 Overall Plant Description

The Ullrich WTP is a lime-softening treatment facility. The treatment process consists of screening, disinfection, coagulation, softening, clarification, recarbonation, and filtration. The filtered water is collected and then stored in clearwells prior to being pumped out to the system. The Ullrich plant was built in 1969, and has recently been expanded from 100 mgd to its current capacity of 160 mgd.

4.2 Existing Chlorine Facilities

Currently, the chlorine is delivered via bulk tank trucks carrying about 32,000 pounds per delivery and then stored in three bulk tanks, each capable of holding 48 tons of chlorine. Some advantages and disadvantages of a bulk chlorine storage system are presented in Table 4.1.

Table 4.1 Advantages and Disadvantages of Bulk Chlorine Storage
TM – On-Site Generation of Sodium Hypochlorite Evaluation
City of Austin

Advantages	Disadvantages
Eliminates one-ton container change-outs	Only one supplier currently willing to deliver to Austin
Reduces frequency of deliveries	Cost per ton currently higher than one-ton containers
Reduces amount of time operators are required to work within chlorine storage area	Larger potential spill volume if a container fitting fails
Reduces storage area requirements	

The main components of the Ullrich bulk chlorine system are the following:

- Storage tanks. Three 48-ton tanks are used to store and feed chlorine in lieu of one-ton containers. Automatic switchover is not provided, although the number of tanks account for a redundant supply and allow one tank to be taken out-of-service and cleaned or inspected.

- Scrubber. The scrubber is large enough to handle the full contents of a 48-ton storage tank. The scrubber is the liquid type using sodium hydroxide. The sodium hydroxide is stored in an 80,000-gallon tank adjacent to the chlorine storage area. The scrubber tank is located in a 10-foot deep secondary containment structure, which is 6.6 feet lower than the adjacent chlorine facility. Presently, 69,000 gallons of

sodium hydroxide is stored in the tanks. This scrubber tank is manufactured from a premium-grade fiberglass-reinforced plastic resin called Hetron Vinylester 922.

- Chlorine Evaporators. Three 10,000-ppd liquid chlorine evaporators are used to convert liquid chlorine to gaseous chlorine when usage rates are high.

- Booster Pumps. Three centrifugal booster pumps are used to supply water to the chlorinators. The pumps design capacities are in the following ranges:
  - Primary – 600 gpm at 240-foot head
  - Secondary – 400 gpm at 270-foot head
  - Run-Out – 840 gpm at 176-foot head

- Chlorinators. The current system has 13 operational chlorinators of varying capacities. Eight chlorinators with capacities up to 500 ppd primarily feed the upflow clarifiers (UFCs) and provide chlorine solution for cleaning the lime piping. Five chlorinators with capacities up to 4,000 ppd primarily feed the raw water lines entering the plant.

Design criteria for the Ullrich bulk chlorine storage system are presented in Table 4.2.

Table 4.2 Existing Chlorine Gas Bulk Storage Design Criteria
TM – On-Site Generation of Sodium Hypochlorite Evaluation
City of Austin

		Existing System		
Description	**Units**	**Min.**	**Avg.**	**Max.**
Feed Criteria				
Process Flow Rate	mgd	20	85	160
Chemical Dosage	mg/L	1.0	4.5	6.5
Pounds of Chlorine per Day	lbs	334	3,190	8,674
Container Storage and Delivery				
15 Days of Storage [1]	lbs	5,010	47,850	130,110
No. of Tanks	no.	3	3	3
Days Between Deliveries [2]	days	96	10	3
Chlorinators				
No. of Chlorinators (Including 1 Standby)	no.	14	14	14
Process Water Usage				
Gallons of Water per Day [3]	gal	13,360	127,600	346,960

Table 4.2	Existing Chlorine Gas Bulk Storage Design Criteria TM – On-Site Generation of Sodium Hypochlorite Evaluation City of Austin			
		Existing System		
Description	**Units**	**Min.**	**Avg.**	**Max.**
Evaporators				
Minimum No. of Evaporators [4] (Including 1 Standby)	no.	3	3	3
Power Use per Day [5]	kw-hr	4	19	27

Notes:
1. Required storage by TCEQ per 30 TAC 290 Subchapter D.
2. Based on 32,000 lbs. per delivery.
3. Based on 40 gallons water per lb. of chlorine.
4. 50 percent redundant feed capacity required per 30 TAC 290 Subchapter D.
5. Based on 12 kw-hr per lb. of chlorine.

4.3 Proposed OSGSH System

4.3.1 Design Criteria

The preliminary design criteria for the proposed Ullrich OSGSH system are presented in Table 4.3. The criteria indicate that at the existing maximum plant capacity (167 mgd), up to 9,050 pounds of chlorine would be required. The possibility exists that the plant will someday be expanded up to 225 mgd, which would increase chlorine usage up to 12,000 ppd.

Table 4.3	On-Site Sodium Hypochlorite Generation Evaluation Preliminary Design Criteria TM – On-Site Generation of Sodium Hypochlorite Evaluation City of Austin				
		Existing			Potential Future
Description	**Units**	**Min.**	**Avg.**	**Max.**	**Max.**
Feed Criteria					
Process Flow Rate	mgd	40	85	167	225
Chemical Dosage	mg/L	1.0	4.5	6.5	6.5
Pounds of Chlorine per Day	lbs	334	3,190	9,050	12,200
Chemical Feed Rate (0.8% Solution)	gpm	3.48	33.2	93.2	125.0

Table 4.3 On-Site Sodium Hypochlorite Generation Evaluation
Preliminary Design Criteria
TM – On-Site Generation of Sodium Hypochlorite Evaluation
City of Austin

Description	Units	Existing			Potential Future
		Min.	Avg.	Max.	Max.
Salt Storage					
Pounds of Salt Used per Day [1]	lbs	1,002	9,570	27,150	36,600
15 Days of Storage	lbs	15,030	143,550	407,250	549,000
Days between Deliveries [2]	Days	40	4	1.5	1
Generators					
No. of Generators (Including 1 Spare) [3]	no.	7	7	7	9
Water Chillers					
No. of Chillers	no.	2	2	2	3
Softened Water Usage					
Gallons of Water Used per Day [4]	gal	5,010	47,850	135,750	183,000
Generator Power Usage					
Kilowatt-Hours/Day [5]	Kw-hr/d	668	6,380	18,100	24,400
Dilute Solution Storage (0.8% sodium hypochlorite)					
Gallons Used per Day	gal	5,010	47,850	135,750	183,000
No. of Tanks [6]	no.	5	5	5	6
Pumped Loop System					
Minimum # of Pumps	no.	2	2	2	2

Notes:
1. Based on 3.0 pounds of salt per pound of chlorine.
2. Based on 40,000-pound deliveries.
3. Based on 1,500-ppd generators.
4. Based on 15 gallons of water per pound of chlorine (does not include chiller power draw).
5. Based on 2.0 kw-hr per pound of equivalent chlorine.
6. Based on 30,000-gallon tanks.

4.3.2 Process Flow Diagram

A process flow diagram for the proposed Ullrich OSGSH system is shown in Figures 4.1a and 4.1b. The diagram shows the major components of the system, including the brine tank, the generators, the water chillers, rectifiers, water softeners, blowers, and sodium hypochlorite solution storage tanks.

4.3.3 Site Layout

The area considered for the OSGSH system is the existing chlorine handling building located on the east side of the plant. The facility is currently designed to accommodate bulk chlorine storage, feed, and deliveries. Several areas adjacent to the building are considered unavailable for the OSGSH system. The roadway immediately to the southwest and northwest must remain available for plant access. In addition, 48-inch and a 72-inch raw water pipelines lie directly below this roadway, northwest of the building.

A possible facility layout for the Ullrich OSGSH system is presented in Figures 4.2a, 4.2b, and 4.3. The layout is for a 9,000-ppd facility (167-mgd plant flow), however, space has been provided in the event a 12,000-ppd facility is ever needed for an expanded flow of 225 mgd. Figures 4.2a and 4.2b show the OSGSH equipment within the existing chlorine handling building. Figure 4.2a shows the rectifiers and their harmonic filters at floor level. A second option is to locate the rectifiers and harmonic filters on a built-out mezzanine above the generators. The layout shows the electrical room expanded, which requires one non load-bearing wall to be moved. This is shown in Figure 4.2b. Figure 4.3 shows the sodium hypochlorite tanks in relationship to the existing chlorine building and surrounding site.

The areas for the sodium hypochlorite storage and the generation system would be approximately 3,000 and 2,400 square feet, respectively. The area required by the brine tank is represented by the existing chlorine scrubber tank (24 feet in diameter). The proposed OSGSH system (for a 167-mgd plant) requires salt storage of 407,250 pounds and sodium hypochlorite storage of 135,750 gallons. To meet sodium hypochlorite storage requirements, five tanks, each with a minimum of 27,150-gallon capacity, will be required. However, the layout shows slightly larger 30,400-gallon tanks to meet future potential expansion requirement to a 225-mgd plant.

To meet the salt storage requirements, the existing chlorine scrubber tank could be used as a brine tank. In lieu of using the existing chlorine scrubber tank as the brine tank, three 68-ton brine tanks can be installed. The disadvantage of this option is locating these tanks within the limited available space. However, the brine makers could be located within the existing bulk chlorine loading area. With this option, the salt truck would have to be parked outside the building during the loading operations.

Another option is to construct an underground storage tank for the salt storage/brine maker that would allow salt to be delivered in belly dump trucks. Below-grade salt tanks should be located close to the NaOCl generators. The existing loading area could be demolished to

locate the proposed tank. Substantial cost would be involved to demolish and reconstruct the structure. In addition, underground tank construction would require excavation within limestone rock. Since brine creates a corrosive environment for concrete and rebar, the tanks must be lined. Due to these reasons, the below-grade brine maker is not recommended for the OSGSH at the Ullrich WTP.

4.4 Implementation Issues

4.4.1 Safety

OSGSH systems produce a weak solution of bleach with a strength less than that of bleaches that can be purchased retail for residential use. Additionally, hydrogen gas is generated but is immediately diluted to non-flammable levels by blowing large volumes of air through the piping and tanks downstream of the generator cells. The overall hazards associated with an OSGSH system are low with respect to other disinfection alternatives.

4.4.2 Environmental Protection

Weak solutions of sodium hypochlorite and saturated salt brine will be stored on-site. The toxicity and potential effect to the surrounding environment from these solutions are less than those presented by chlorine that is currently stored under bulk storage. The hypochlorite solution storage tank would be constructed with secondary containment and redundant safety systems to prevent accidental release of the hypochlorite solution into the environment. If an accidental spill occurs, the already diluted NaOCl solution could be further diluted and the effects minimized compared to gas chlorine.

Secondary containment is not required for brine solution and salt. However, secondary containment serves as a housekeeping function. Secondary containment exists for the chlorine scrubber tank. If the scrubber tank is used as a salt storage/brine tank, secondary containment will already be provided.

4.4.3 Equipment and Supply Reliability

The reliability of the disinfection storage and feed equipment and the ability to receive uninterrupted supplies of bulk deliveries (chemical or salt) to keep the system operational are important factors in a disinfection storage and feed system. The goal for the disinfection system is to provide continuous operation for extended periods. OSGSH systems use equipment with a shorter history of operations than chlorine gas. However, the manufacturers of this equipment have continuously improved the reliability of the equipment and have extensive reference lists of users who are satisfied with the reliability. Availability of replacement parts is also a consideration and varies according to the manufacturer (discussed in Section 4.4.14). With respect to supply reliability, salt is abundant, readily available for bulk purchase, and not subject to any security concerns.

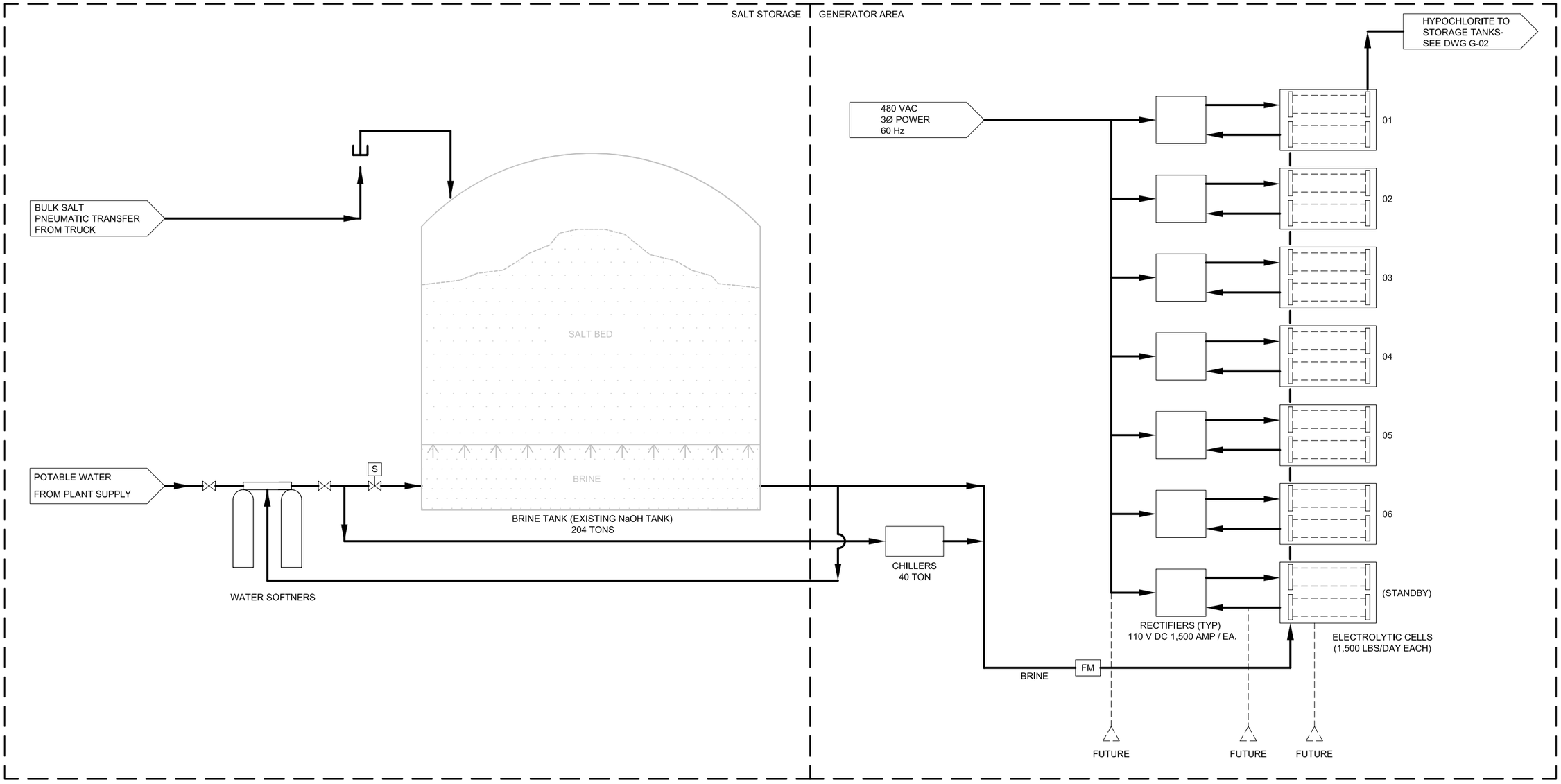

Figure No. 4.1a
ULLRICH WATER TREATMENT PLANT
SODIUM HYPOCHLORITE GENERATION
PFD (9,000 PPD SYSTEM)
CITY OF AUSTIN

carollo
Engineers...Working Wonders With Water™

THIS PAGE INTENTIONALLY LEFT BLANK

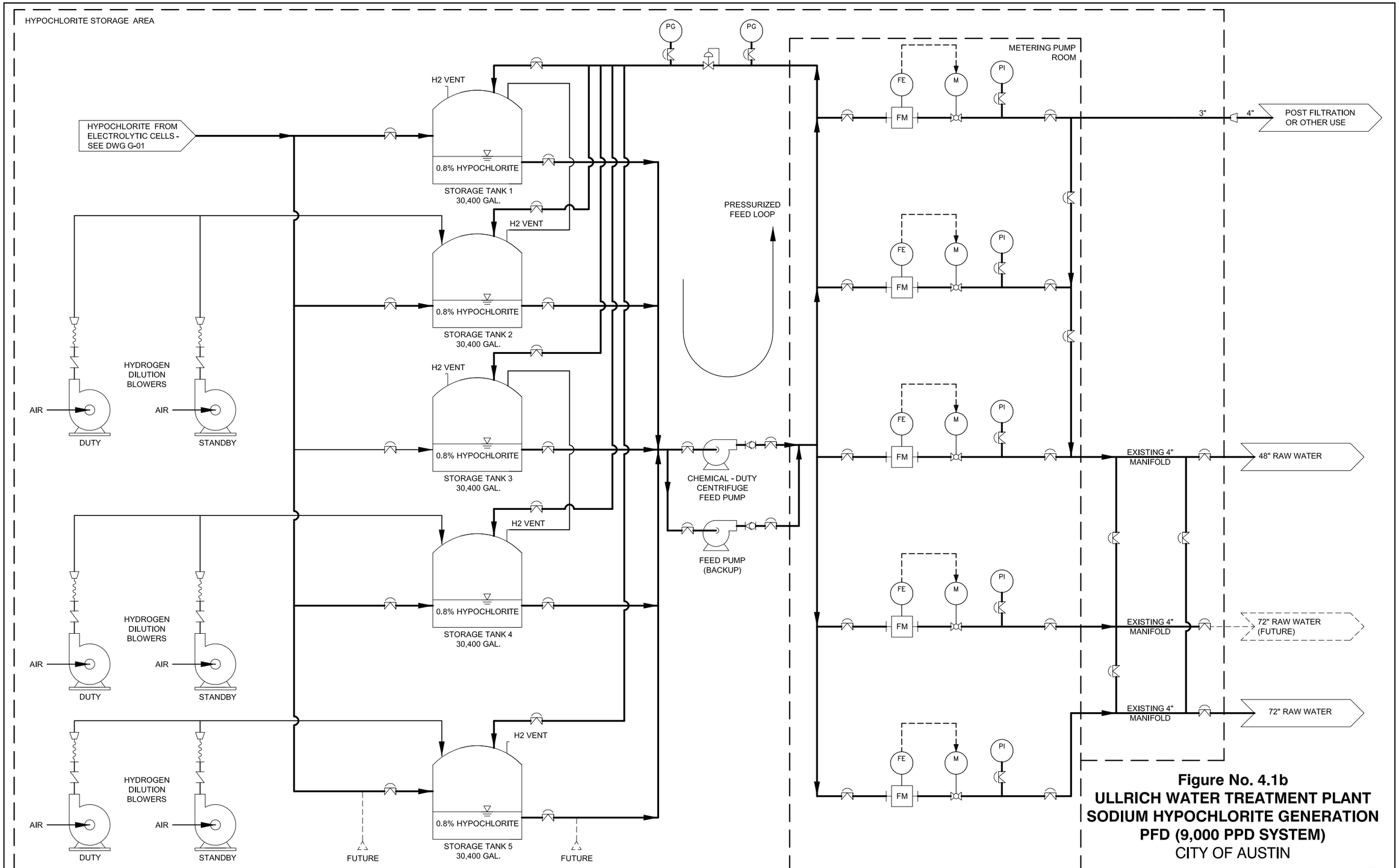

Figure No. 4.1b
ULLRICH WATER TREATMENT PLANT
SODIUM HYPOCHLORITE GENERATION
PFD (9,000 PPD SYSTEM)
CITY OF AUSTIN

H:\CLIENT\Ullrich_AUS\DWGS\P\Ulrich Hypochlorite P&ID-FIG 5.1B 5-28-08 02:56pm LDietzel XREFS:

carollo
Engineers...Working Wonders With Water™

THIS PAGE INTENTIONALLY LEFT BLANK

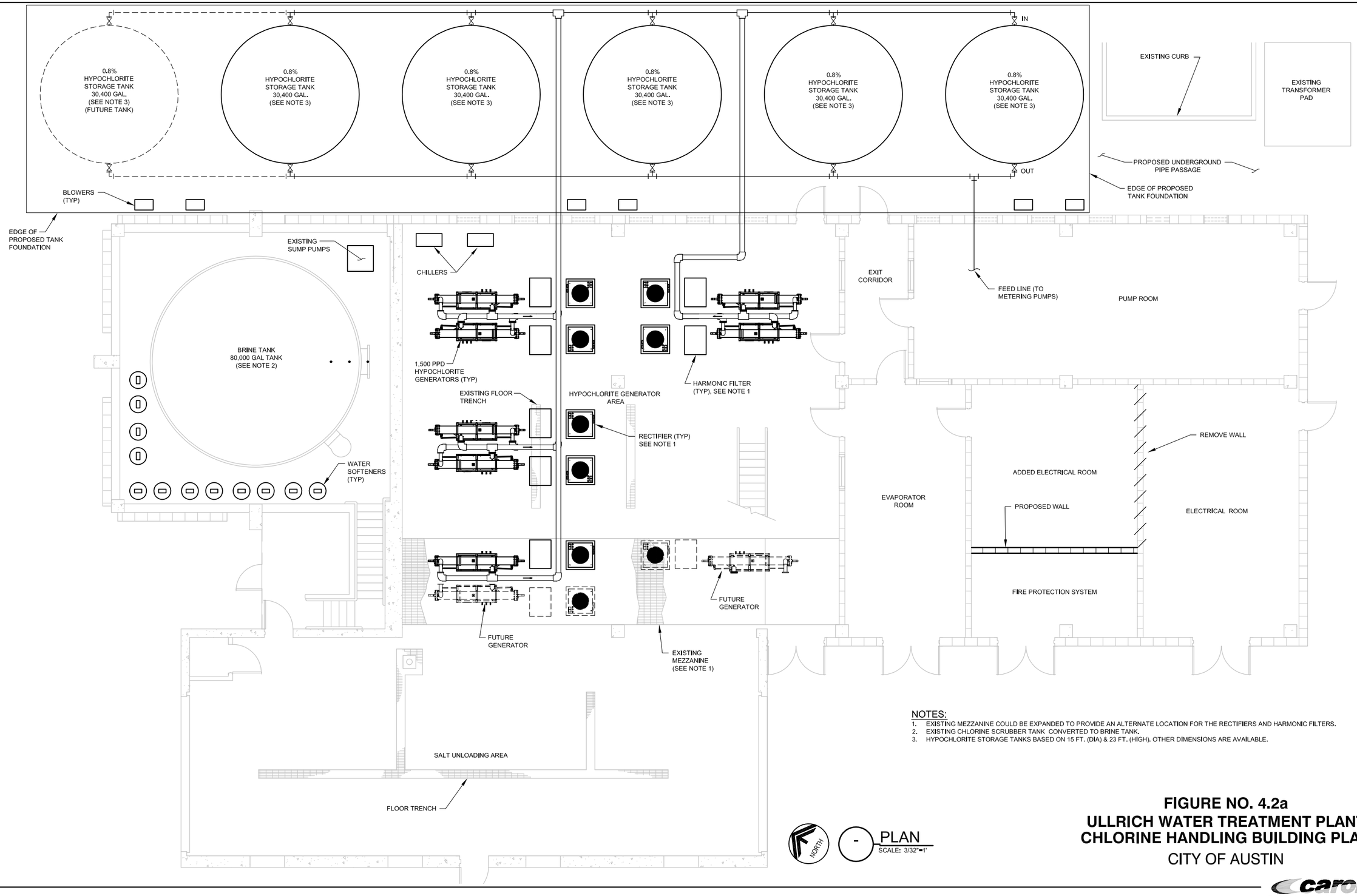

NOTES:

1. EXISTING MEZZANINE COULD BE EXPANDED TO PROVIDE AN ALTERNATE LOCATION FOR THE RECTIFIERS AND HARMONIC FILTERS.
2. EXISTING CHLORINE SCRUBBER TANK CONVERTED TO BRINE TANK.
3. HYPOCHLORITE STORAGE TANKS BASED ON 15 FT. (DIA) & 23 FT. (HIGH). OTHER DIMENSIONS ARE AVAILABLE.

FIGURE NO. 4.2a
ULLRICH WATER TREATMENT PLANT
CHLORINE HANDLING BUILDING PLAN
CITY OF AUSTIN

carollo
Engineers...Working Wonders With Water™

H:\CLIENT\Ullrich_AUS\DWGS\MCHB Plan M-1 5-28-08 10:20pm LDietzel XREFS: X-Chlorine Handling Building Plan; Chlorine Handling Mechanical Plan; P-Chlorine Handling Building Plan

THIS PAGE INTENTIONALLY LEFT BLANK

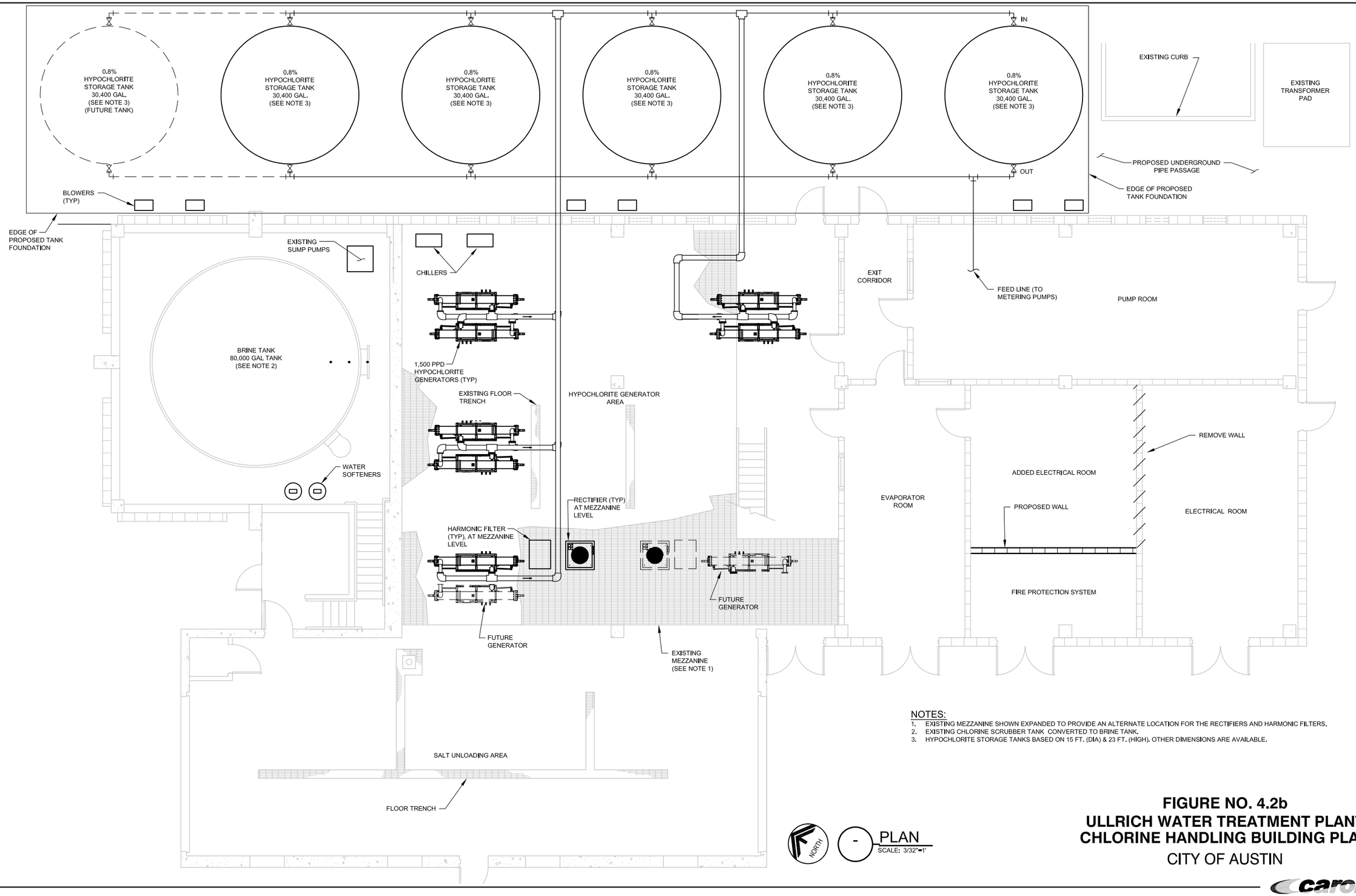

NOTES:

1. EXISTING MEZZANINE SHOWN EXPANDED TO PROVIDE AN ALTERNATE LOCATION FOR THE RECTIFIERS AND HARMONIC FILTERS.
2. EXISTING CHLORINE SCRUBBER TANK CONVERTED TO BRINE TANK.
3. HYPOCHLORITE STORAGE TANKS BASED ON 15 FT. (DIA) & 23 FT. (HIGH). OTHER DIMENSIONS ARE AVAILABLE.

FIGURE NO. 4.2b
ULLRICH WATER TREATMENT PLANT
CHLORINE HANDLING BUILDING PLAN
CITY OF AUSTIN

carollo
Engineers...Working Wonders With Water™

H:\CLIENT\Ullrich_AUS\DWGS\MCHB Plan M-1B 5-28-08 02:24pm LDistrell XREFS: P-Chlorine Handling Building Plan; Chlorine Handling Mechanical Plan B; X-Chlorine Handling Building Plan B

THIS PAGE INTENTIONALLY LEFT BLANK

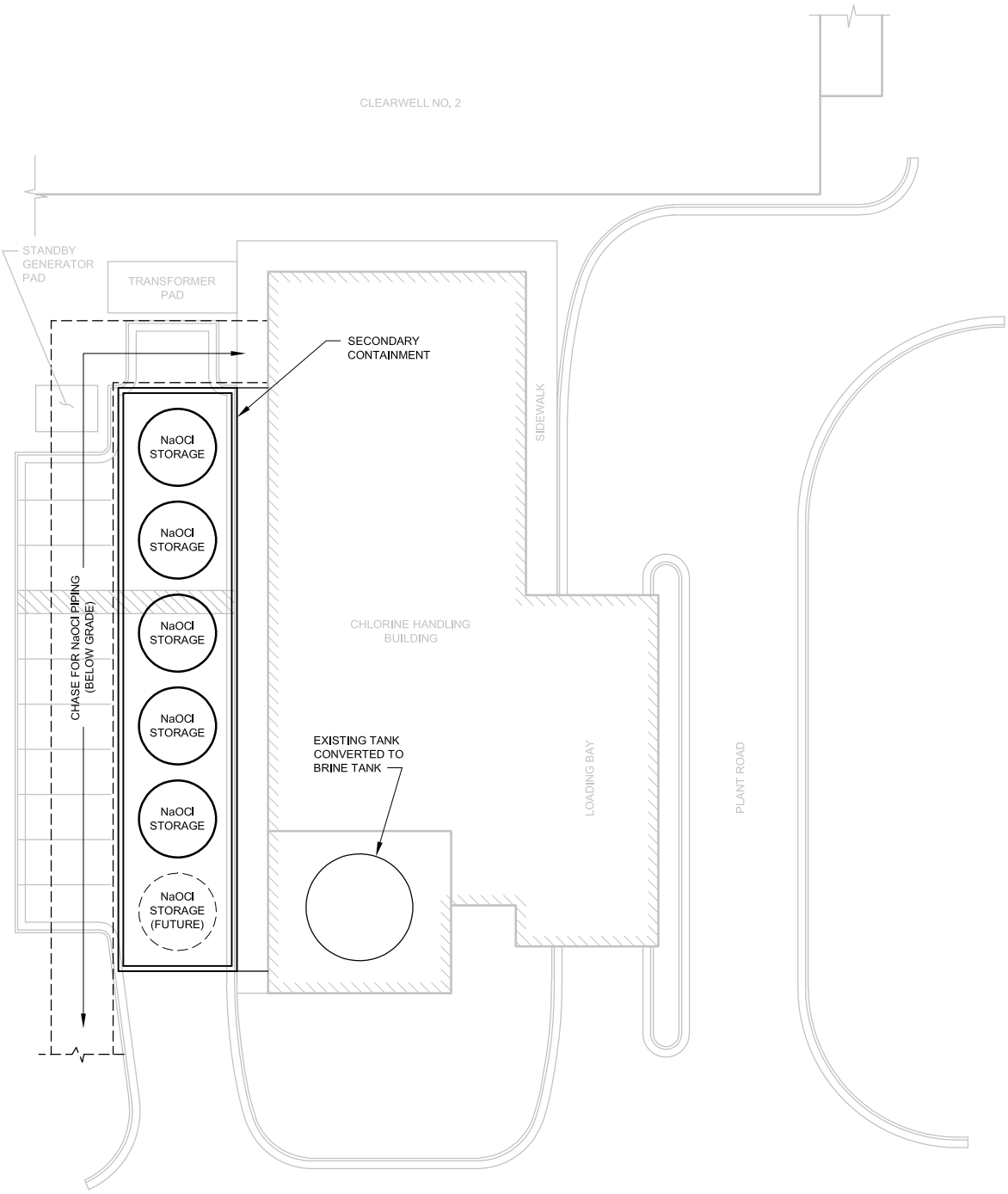

NORTH

- PLAN
SCALE: 1/32"=1'

Figure No. 4.3
ULLICH WATER TREATMENT PLANT
ON-SITE SODIUM HYPOCHLORITE SYSTEM
CHLORINE HANDLING FACILITY LAYOUT
CITY OF AUSTIN

carollo
Engineers...Working Wonders With Water™

THIS PAGE INTENTIONALLY LEFT BLANK

4.4.4 Redundancy

Redundancy refers to the stand-by or back-up capabilities of an alternative if the primary equipment fails or is taken off-line for service or maintenance. The goal for the Ullrich WTP disinfection system is to provide complete feed redundancy coupled with 15 days of storage redundancy (based on maximum flow and maximum dosage feed conditions).

Rather than having a 15-day supply of disinfectant stored on-site, the OSGSH system has 15 days of salt storage, which must be converted to disinfectant. A one-day supply of sodium hypochlorite solution is stored downstream of the electrolytic generators. The electrolytic generators would be backed up by a spare electrolytic generator that can be brought on-line if one fails or is taken off-line.

The design could also incorporate the ability to receive bulk hypochlorite, which could be diluted to 0.8 percent product using softened water. This provides an alternate means of redundancy. Additional redundancy can be provided through back-up power, either by dual electrical feeders or by a back-up power generator.

4.4.5 Transportation and Storage Security

Homeland security requirements have affected the price and delivery of hazardous chemicals, such as chlorine gas, and have led to design considerations that must be incorporated into the storage of these materials on site. The security goal for a disinfection storage and feed system is to minimize security concerns.

Converting to an OSGSH system will eliminate the use of chlorine gas, which is lethal in concentrations above 1,000 ppm. While security programs and procedures are in place to prevent incidents associated with chlorine delivery, no approach can be guaranteed to be 100 percent effective. Additionally, chlorine deliveries are outside the direct control of the City of Austin.

The OSGSH system would require deliveries to the plant (see Section 4.4.8). The OSGSH system would use salt or possibly commercial-strength sodium hypochlorite occasionally as a back-up disinfectant, but neither possesses the lethality of chlorine gas.

4.4.6 Re-Use of Existing Equipment

The existing chlorine facility has an 80,000-gallon sodium hydroxide storage that is part of a chlorine scrubber system. The City requested that this tank be evaluated with respect to reuse for an OSGSH system. The tank currently stores 69,000 gallons of sodium hydroxide (20 percent by weight). Consideration was given to reusing the tank for either salt storage/brine maker or sodium hypochlorite storage.

4.4.6.1 Existing Sodium Hydroxide Tank

The sodium hydroxide storage tank for the chlorine scrubber is proposed for reuse as a brine/salt storage or sodium hypochlorite storage. The tank was manufactured by Belco Manufacturing Co. of Belton, Texas. The tank is made of a premium-grade vinylester resin (Hetron 922) and the design operating temperature ranges from 80 to 100 degrees Fahrenheit with a maximum temperature tolerance of 162 degrees Fahrenheit for six hours. The tank is located in the northwest end of the chlorine handling facility within a secondary containment area that is 6.5 feet lower than the rest of the facility.

The existing 80,000-gallon sodium hydroxide storage tank can be used to store the 0.8-percent sodium hypochlorite generated on site. However, according to the tank manufacturer, the tank is not capable of storing sodium hypochlorite in concentrations greater than 2 percent. Given that commercial-grade (12 percent) sodium hypochlorite could be received and then diluted as a back-up option, the tank is not a viable option for storing generated sodium hypochlorite.

One day of on-site storage of the 0.8-percent sodium hypochlorite solution is required. The 80,000-gallon capacity of the tank exceeds the 47,850 gallons per day (gpd) of the 0.8-percent sodium hypochlorite required to treat an average water production (85 mgd) with an average chlorine dose (4.5 mg/L). However, at maximum water production (167 mgd) at maximum dosage (6.5 mg/L), 135,750 gpd of 0.8-percent sodium hypochlorite storage is required. Therefore, the existing tank has insufficient storage and additional tanks would be required to meet the peak storage requirement. To satisfy the one-day storage requirement at the future maximum water production rate (225 mgd), the existing tank and four 26,000-gallon tanks (12-feet diameter and 30-feet height) would be required. The space for these additional tanks would be required within the existing chlorine building area. Also, the existing tank would be lower than the additional tanks, which would complicate the hydraulics of the storage system. Ideally, all tanks should be at the same elevation so the storage volume can act as one reservoir.

Based on the review of shop drawings and manufacturer data, the existing 80,000-gallon tank can be converted to brine/salt storage. To achieve this, the existing tank will have to be modified to incorporate brine collectors, a sludge bed, and a filtration zone, which will take up approximately the bottom 3 feet of the tank. In addition, a water distribution system will have to be installed, which distributes water evenly. A brine collector cistern/withdrawal system would have to be installed to provide uniform collection of the brine over the tank's cross-sectional area. During design, a final determination must be made to assure that all necessary modifications can be accomplished.

The effective quantity of salt that can be stored in the existing tank is approximately 513,000 pounds (256.5 tons). The 513,000-pound storage volume is based on two feet of free board (at center of tank) and the bottom three feet utilized for the brine distribution infrastructure.

The 513,000-pound capacity is capable of storing a 15-day supply of salt for the existing 167-mgd plant and a 14-day supply if the Ullrich WTP is ever expanded to the 225-mgd capacity. However, by filling within about one foot of free board, the tank would have a 15-day storage capacity for a 225-mgd plant expansion.

Based on the above considerations, the existing 80,000-gallon tank is recommended for use as a brine/salt storage tank if an OSGSH system is constructed.

4.4.7 Transitioning Systems and Temporary Equipment

A disinfection system is required to be operational while the proposed OSGSH system is installed. A temporary chlorine system would be in place during the transition period from the time the existing chlorine system is taken offline to the time the new OSGSH system is placed into service. The temporary system would have to be installed to handle the projected peak flow and dosage during the transition period. The use of commercial-grade 12-percent NaOCl is recommended.

The size of a temporary system would not only be based on the expected peak flow and dosage, but also on TAC Chapter 290 requirements. Chapter 290 requires that bulk storage at the plant be adequate to achieve at least a 15-day storage supply. Using the 167-mgd peak flow, this would represent approximately 148,000 gallons. The alternative to this option would be to obtain an exception from TCEQ to allow less than 15 days NaOCl storage. Having less than a 15-day supply on site is desirable in that large amounts stored on site will not be degrading and less space for storage tanks will be required. Commercial-grade NaOCl is readily available, making long-term, on-site storage a viable option.

Meeting the 15-day storage requirement could be accomplished by installing the proposed tanks for the OSGSH system (five 30,000-gallon tanks provides a total of 150,000 gallons) for the temporary system. This option would save material cost in implementing the temporary system. However, in order for these storage tanks to be placed into service, the existing chlorine solution lines would have to be temporarily relocated to build the tank foundation. Relocating the existing chlorine solution lines would add to the project cost. In addition, the project schedule would need to be extended since the tanks would have to be delivered prior to setting up the temporary system.

If an exception to 15 days' storage is acceptable, other options are available in respect to storage tanks. One option is to park a portable tank on a trailer. This tank would be on site during the transition period and be filled on a daily basis by a sodium hypochlorite supplier. The advantage of this option is that this type of tank is readily available and cost effective. The disadvantage of the tanker truck option is that the tank has a limited capacity of approximately 5,000 gallons. This represents a 1-day supply of NaOCl (12 percent active strength) for a 105-mgd plant production at a 6.5-mg/L dosage. Due to the limited storage capacity, this is not a viable option with higher plant flows.

A second option for temporary storage tanks is to place one or two aboveground storage tanks on site. These are available for lease from the sodium hypochlorite suppliers or the OSGSH manufacturer. Typical sizes would be 10,000 to 14,000 gallons. The main advantage of this option is that these tanks provide for more storage. For example, one 14,000-gallon tank would provide close to three days of storage for an average plant flow of 85 mgd at a 6.5 mg/L dosage. Figure 4.4 shows a site plan for the temporary system options. Two 14,000-gallon tanks are shown in Figure 4.4, which represent 6 days of storage at average plant conditions.

The space for locating a temporary system around the existing chlorine handling building is very limited. The location of a temporary system must be acceptable for NaOCl deliveries and not interfere with the proposed construction activities. Figure 4.4 shows a site plan with the footprint for two options: the proposed OSGSH tanks used for storage and an option with two temporary storage tanks. The space used for the temporary tanks could accommodate the tanker truck as an alternate option.

Figure 4.5 shows a schematic for a temporary sodium hypochlorite system. The components of the temporary system would consist of storage tank(s), metering pumps and associated calibration features and valves. Several metering pumps would be required. Figure 4.5 shows one pump for each distribution point and one back-up pump (other pumping options can be considered). It is recommended that these pumps be sheltered from the weather. A temporary fiberglass building or roofed structures could be installed for this purpose.

4.4.8 Deliveries

The OSGSH system requires salt to be delivered by truck. Typically, salt is delivered in approximately 40,000-pound installments. Site access and road use would be the same as for the chlorine gas deliveries. Loading the salt into the brine tank(s) is accompanied by an attachable hose and an air blower. The air blower is provided by the delivery truck; hence, one is not required at the OSGSH facility itself. However, if noise is a concern, a separate blower can be installed within an enclosed area to provide air for pneumatic off-loading. At Ullrich, keeping the existing loading bay free from the OSGSH equipment will provide an enclosed area for deliveries. This offers the advantage of further noise suppression and dust containment.

Two factors that must be considered with respect to the delivery truck parking and the salt storage tank are:

1. The delivery trucks must be within 30 feet of the brine tanks.
2. There can be no more than three bends or sweeps in the transfer line.

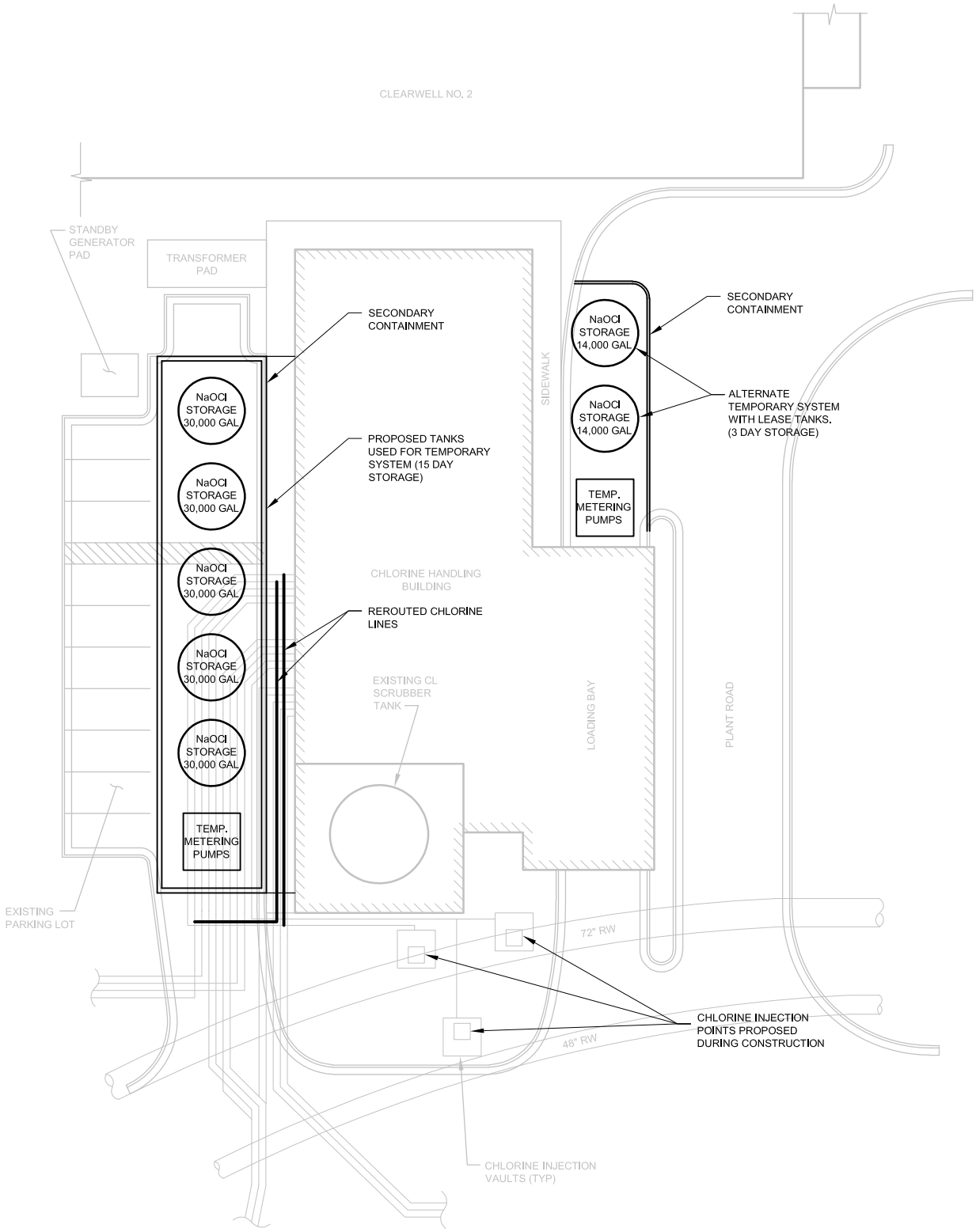

NORTH

- PLAN
SCALE: 1/32"=1'

Figure No. 4.4
ULLICH WATER TREATMENT PLANT
TEMPORARY SODIUM HYPOCHLORITE
SYSTEM SITE LAYOUT
CITY OF AUSTIN

carollo
Engineers...Working Wonders With Water™

THIS PAGE INTENTIONALLY LEFT BLANK

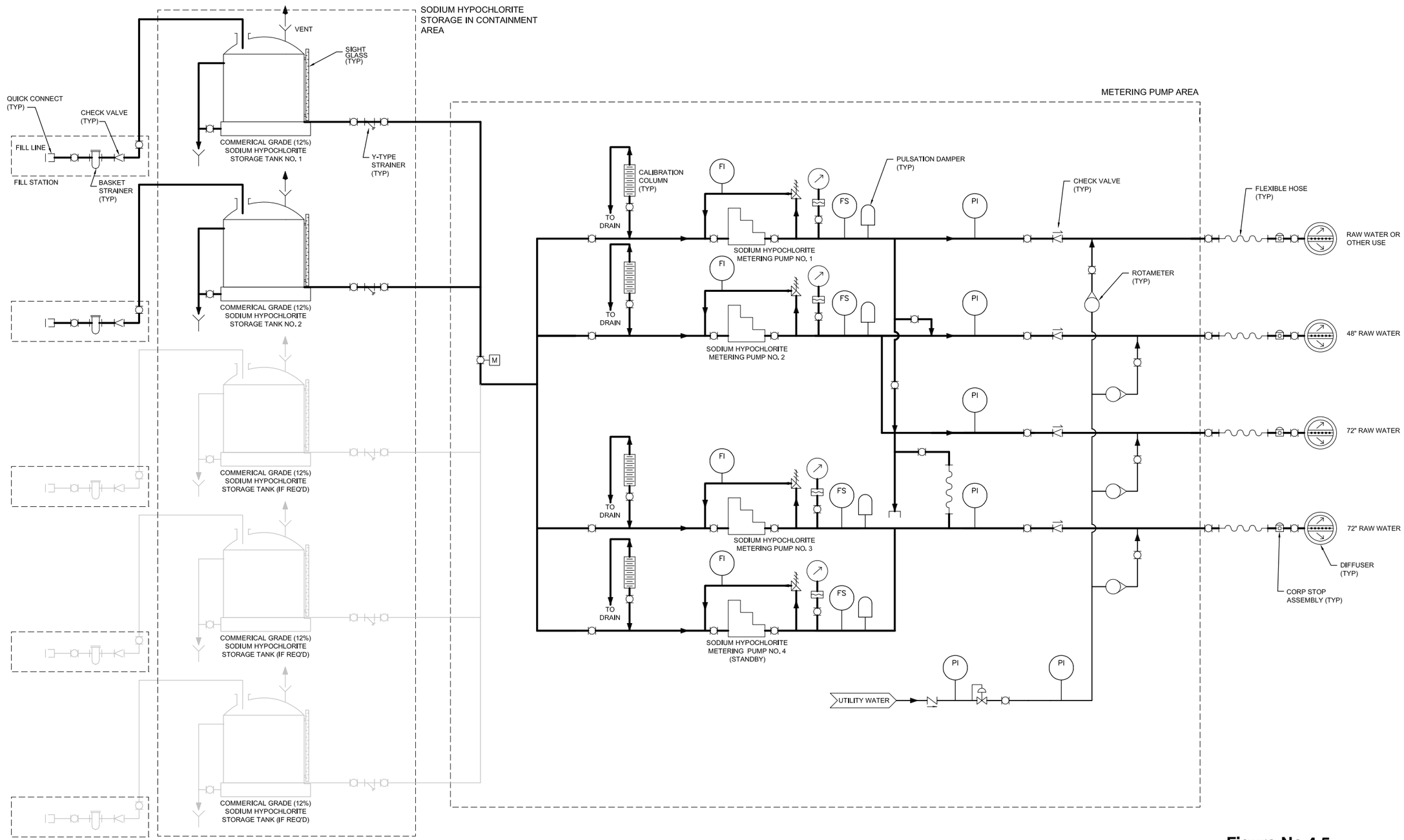

NOTES

1. METERING PUMP ARRANGEMENT MAY BE MODIFIED TO TWO PUMPS WITH FLOW PORTIONING TO INDIVIDUAL INJECTION POINTS.

Figure No.4.5
TEMPORARY SODIUM HYPOCHLORITE SYSTEM PROCESS FLOW DIAGRAM
CITY OF AUSTIN

carollo
Engineers...Working Wonders With Water™

THIS PAGE INTENTIONALLY LEFT BLANK

4.4.9 Code Issues

The OSGSH system can be designed to meet all local, industry, and national code requirements. The existing building and existing facility would have to be significantly modified to accommodate the proposed OSGSH equipment. These building modifications would require City of Austin Building Department approval.

4.4.10 Pilot Studies

A pilot study could be conducted to further explore how OSGSH would work at the Ullrich WTP. The pilot study would consist of a skid-mounted system that could feed 0.8-percent sodium hypochlorite at a range up to about 100 ppd. The smaller pilots are offered by most manufacturers and are available by lease. A larger pilot system matching the OSGSH generator sizes required at Ullrich is not readily available and would be costly. A pilot study is not necessary to demonstrate the reliability of the OSGSH system since the technology has been previously established and proven at other facilities. However, it would provide the City with information on operational characteristics and water quality effects. The nearest OSGSH installation is a 1,500-ppd system located in Pflugerville, Texas that has been operational since 2006.

4.4.11 Required Water Use

At the plant's peak production rate, the proposed 9,500-ppd OSGSH system would require 135,750 gallons of water. This water would likely by transferred to the system by pumps. The water would be softened prior to use. The Ullrich WTP water contains low dosages of sodium hexmetaphosphate. The small amount present would not be a problem for the OSGSH system according to the OSGSH suppliers.

4.4.12 Housekeeping of Lime Solution Lines

The existing configuration of the lime feed system leads to scaling of the feed pipes, which must be removed on a regular basis. Presently, the lime scale is periodically removed/cleaned by the injection of chlorine gas solution into the lines. Since the chlorine solution is acidic, the reaction with the lime enables the breakdown and subsequent removal of the lime scale. If the OSGSH system is implemented, the chlorine gas will not be available to remove the lime scale. OSGSH solution is not acidic and will not be useful for removing scale from the lime slurry discharge lines. See Section 4.5, Associated Lime Feed Upgrades, for alternatives that could be implemented in lieu of using the chlorine gas solution.

4.4.13 Existing Chlorine Distribution Lines

One existing component to be considered with the OSGSH implementation is using the existing chlorine distribution lines. At Ullrich, several lines convey chlorine solution to the raw water lines (48-inch and 72-inch pipe lines), the UFCs, and for the lime slurry system.

With an OSGSH system, the chlorine solution would still be distributed to the raw water lines. The existing lines to the raw water are double-contained PVC lines with 4-inch and 6-inch carrier pipes. The length of piping ranges from a few hundred feet to over two thousand feet.

The existing pipe material, PVC, is compatible with the 0.8-percent solution. However, the pump flow rates with OSGSH would provide very slow velocities in the existing lines. At peak flow (167 mgd), the chlorine demand would be approximately 93 gpm. This would be delivered to the raw lines by at least two or more pumps, each providing a 46.5-gpm or less pumping capacity. With this pumping rate in the 6-inch line, the resulting velocity would be approximately 0.5 fps, which results in over an hour response time in a 2,000-feet pipe run. Due to the slow response times, using the existing feed lines is not recommended. Sections of these lines will require replacement as a result of placing new NaOCl storage tanks at the building's northwest side. The remaining pipeline sections will require replacing with smaller lines to achieve the faster velocities and response times.

4.4.14 Recommended OSGSH Manufacturers

The three primary manufacturers of OSGSH systems are:

- Clor Tec by Severn Trent Services, Torrance, California
- OSEC by Wallace and Tiernan (US Filter), Vineland, New Jersey
- Process Solutions, Inc. (PSI), Campbell, California

Established and proven manufacturers for larger systems are Clor Tec and OSEC, although PSI has recently been selected by several large systems throughout the U.S. The equipment and configurations of the Clor Tec and OSEC systems are almost identical. The Process Solutions, Inc. system has several innovative design variances that make this system worth considering. These include vertically mounted electrolytic cells/generators, which provide for a more efficient off-gassing as well as providing a slightly smaller footprint. PSI is the selected vendor for WTP 4. It is recommended that all three vendors be allowed to bid if the Ullrich OSGSH project moves forward.

4.5 Associated Lime Feed Upgrades

4.5.1 Background

The Ullrich WTP lime slurry delivery system to the UFC basins is a direct feed system. The slurry is pumped from the RDP Tekkem (RDP) lime slurry aging tanks using Watson-Marlow hose pumps. The lime slurry is conveyed using plant service water to the upflow clarifiers. The motive water reacts with the stable lime slurry and the slurry "softens" the motive water resulting in the deposition of calcium carbonate scale on the isolation ball valves and the piping downstream of the injection point of the motive water. The plant

currently uses the acidic chlorine solution produced using gaseous chlorine to clean the valves and piping subject to scaling problems.

If the plant converts from a liquid and gaseous chlorine system to an OSGSH system, the plant chlorine disinfection chemical solution would no longer be acidic but basic. The plant would therefore need to use an alternate method to either clean the lime piping or deliver the lime slurry such that cleaning of the conveyance piping was not required.

4.5.2 Ullrich Lime Feed System and Cleaning Requirements

The lime feed system including slakers, aging tanks, Watson-Marlow hose pumps, and conveyance piping has been delivering lime to the UFCs since September 2005. Recent modifications have been made to the lime feed pumps, including optimizing the number of shims and changing the direction of rotation. These modifications have increased the pump hose life. The delivery system has also been modified to reduce bends and improve utilization of all pumps and systems at lower plant flows. The lime slurry conveyance system consists of two pipelines connecting each dedicated pump to each basin. The conveyance piping system is open ended without valving. For every three dedicated feed pumps, there is one spare feed pump that delivers lime to the selected UFC using a dedicated overhead piping system.

The Standard Operations Procedure (SOP) for cleaning the piping is to use “housekeeping chlorine” from the chlorinators in the chlorine handling building. Just as there is a dedicated pump for each basin, there is a dedicated chlorinator for each basin. For example, Lime Feed Pump No. 1 (LFP-001) under routine operations would feed lime to Upflow Clarifier No. 1 (UFC-001) and the housekeeping chlorine would be provided using Chlorinator No. 1 (CL-001). SOPs call for feeding lime through one pipeline and the acidic chlorine solution through the other pipeline and switching the two pipelines weekly.

Historically at Ullrich, the acidic chlorine solution has been an excellent way to prevent lime scale buildup in the piping. The acidic chlorine solution is readily available and NSF approved. Cleaning is currently accomplished by applying 25 ppd of gaseous chlorine and using motive water, resulting in a pH of approximately 5. Years ago, when the plant slaked lime with the Wallace and Tiernan (W&T) paste slakers, SOPs included application of 100 to 150 ppd chlorine to each basin. The plant has been experimenting with reducing these feed rates. Since the RDP slakers were installed, the application rate has remained at about 50 ppd. Installation of sections of clear PVC piping in the conveyance piping to UFC-008 have allowed the plant to visually track the flow of lime slurry and observe the time required to remove lime buildup. From the clear PVC window in the piping, the piping was observed to be clean after less than 2 days at the 50-ppd chlorine solution concentration. The plant is currently feeding 25 ppd for the entire week to clean the piping and maintain the SOP to swap the pipelines weekly.

The plant also uses a proprietary product called Acid Magic® recommended by RDP which contains hydrochloric acid (HCl) for cleaning the slakers and aging tanks. Drums are stored on the slaker level of the lime handling building.

4.5.3 Options for Operating and Maintaining the Lime Feed System in lieu of Delivered Gaseous Chlorine

The following alternatives are identified for operating and maintaining the lime feed system in the event that gaseous chlorine is not used as the chlorine disinfection chemical.

1. Alternative 1. Provide an alternate acidic cleaning solution for the existing lime feed conveyance system to replace acidic chlorine solution in existing SOPs for swapping lime and chlorine feed piping weekly.
2. Alternative 2. Produce small amount of gaseous chlorine on site for housekeeping chlorine with a combination generation system (produces gaseous chlorine and sodium hypochlorite). Follow existing SOP for swapping lime and chlorine feed piping weekly.
3. Alternative 3. Modify the lime system to a neat (undiluted) loop feed system instead of a motive-water driven direct feed system. Provide provisions for an NSF-approved acid feed system for acid washing the piping if needed.
4. Alternative 4. Modify the lime system to minimize (not eliminate) use of motive water. Increase routine flushing of piping. Provide NSF-approved acid feed system for periodic cleaning of system.
5. Alternative 5. Modify the lime system to a direct feed neat system. Provide provisions for NSF-approved acid for acid washing piping if needed.

The impact of the change for each alternative is described below. Advantages and disadvantages are also identified.

4.5.4 Alternative Descriptions

1. Alternative 1 – Provide Acid Cleaning Solution. The plant currently uses Acid Magic®, which includes low-strength hydrochloric acid (HCl) for descaling valves and equipment, and operations and maintenance personnel are familiar with handling it. This product, which is an NSF-approved proprietary product, is recommended by RDP.

   Acid Magic® is a good choice for acid cleaning the lime conveyance piping, although it is a more expensive product. The pH of the chlorine solution at 25 ppd is approximately 5. Dilution of the acid to a pH of 5 with plant service water would provide a solution that would be expected to clean the piping within one week allowing current SOPs for swapping the dual lime slurry pipelines to remain the same. The proposed system would include bulk delivery of chemical and on-site facilities very similar to those required for a fluorosilicic acid system (dual bulk storage tanks,

chemical feed pumps, and appurtenances). With this alternative, the existing chlorine piping in the lime handling building would be converted to dilute acid piping. No other modifications would be required. The advantages and disadvantages of this alternative are presented in Table 4.4.

Table 4.4 Advantages and Disadvantages of Lime Feed System Alternative 1
TM – On-Site Generation of Sodium Hypochlorite Evaluation
City of Austin

Advantages	Disadvantages
No modifications to lime conveyance or cleaning piping required at the lime handling building	Acid handling required
Easy to pilot test to confirm design parameters	Dedicated feed and storage components required
System design similar to fluoride system	Storage must be vented outside of room
Operations personnel familiar with handling muriatic acid and already used on site	
All required changes at chlorine handling building	
Small space requirements	
No modifications to cleaning SOP required	
Weekly SOP ensures no “surprises” with excessive scale buildup	
Cleaning system would not impact chloramine disinfection process or residual downstream of the upflow clarifiers	
No variation in disinfection residuals downstream of clarifiers due to different dosing of chlorine	
No disruption to plant production to make change	
Minimal training required	
Demolition of existing systems would be minimal, best use of existing investment	
Design, equipment, construction costs to achieve goals would be minimal	

2. Alternative 2 – Produce Small Amount of Gaseous Chlorine On Site for Cleaning. Alternative OSGSH systems are manufactured that allow both production of sodium hypochlorite and gaseous chlorine. This option would allow all existing systems to remain in place, including the housekeeping chlorinators and all piping between the chlorine handling building and the lime building. As with Alternative 1, no modifications would be required to the conveyance piping or the lime system. When all of the plant basins were the same or similar capacity, addition of the so-called housekeeping chlorine did not typically cause any problems with chloramines disinfection residuals. The recent addition of housekeeping chlorine has resulted in some problems with uneven chlorine residuals in the different basins and problems when the basin effluents are mixed as reported by the plant manager. Table 4.5 presents the advantages and disadvantages of this alternative.

Table 4.5 Advantages and Disadvantages of Lime Feed System Alternative 2 TM – On-Site Generation of Sodium Hypochlorite Evaluation City of Austin

Advantages	Disadvantages
No modifications to lime conveyance or cleaning piping required at the lime handling building	Gaseous chlorine on site which negates some of the safety advantages of converting to an OSGSH system
No modifications to cleaning SOP required	Equipment for dual system more expensive than just bleach conversion
All required changes at chlorine handling building	Existing chlorinator area may be needed for OSGSH system
No pilot testing needed; cleaning system proven	Dual generation system is more complicated than just bleach conversion system
Does not add another chemical or product for delivery or increase chemical delivery requirements from those needed for bleach system	Scrubber system required
	Chlorine monitoring system required
	Not an “inherently safer” technology
No deliveries of gaseous chlorine	Significant training required
Use of existing systems is highest, although upgrading of HVAC and safety systems, including scrubber, could be significant	Uneven dosing of housekeeping chlorine to the upflow clarifiers impacts chloramines process and effects chlorine residual downstream of the basins.

3. <u>Alternative 3 – Modify Existing Lime Feed System to Be a Direct Feed System with a Slurry Loop.</u> This option would require grit removal so that the slurry could be pumped at a scouring velocity of 4 to 5 feet per second and so that the pinch valves at the delivery points at the basin are workable. This would require extensive redesign of the feed system to include addition of a grit removal, centrifugal pumps, and installation of a CPVC loop system. All of the existing lime slurry feed pumps and piping would be demolished. Design would include provisions for an acid wash system. Table 4.6 presents the advantages and disadvantages of this alternative.

Table 4.6 Advantages and Disadvantages of Lime Feed System Alternative 3
TM – On-Site Generation of Sodium Hypochlorite Evaluation
City of Austin

Advantages	Disadvantages
Addition of grit removal allows ongoing delivery of lime that does not meet the City specification for lime quality No space required at chlorine building for dedicated cleaning systems; frees up space at chlorine building Grit removal may provide some benefit to sludge feed pump stator life and centrifuge life	Unproven conveyance system for Austin Extensive demolition of a working system; Use of existing investment would be minimal Addition of centrifugal pumps and a grit removal system to be operated and maintained Disposal of grit increases routine operations personnel effort. No easy way to pilot test slurry loop feed system (centrifugal pumps, loop to UFC-008, velocities, pinch valves) prior to installation Provisions for acid wash system required; Frequency, best pH, and effectiveness unknown Most engineering redesign required of all the alternatives Disruption to existing water production during construction, plant shutdown required Operations personnel would need to work outside at basins 24/7 if problem at feed point. Least use of existing investment; highest cost of alternatives Periodic maintenance (acid cleaning) may not be done when needed and could result in excessive scale buildup and unexpected shutdowns. Temporary cleaning-type facilities may be harder to ensure optimal and safe handling practices.

4. Alternative 4 – Use Existing Lime Slurry Feed System. This alternative uses the existing lime slurry feed system, but minimizes the use of motive water to reduce turbulence and scaling. Increased flushing with water is required, and an acid feed system must be installed for periodic use. Table 4.7 presents the advantages and disadvantages of this alternative.

Table 4.7 Advantages and Disadvantages of Lime Feed System Alternative 4
TM – On-Site Generation of Sodium Hypochlorite Evaluation
City of Austin

Advantages	Disadvantages
Easy to pilot test effectiveness of just flushing with water Utilizes existing equipment investment No weekly cleaning SOP for conveyance piping No impact on disinfection residuals No disruption to plant production to make change Minimal training required Demolition of existing systems would be minimal, best use of existing investment Design, equipment, construction costs to achieve goals would be minimal	Minimizing motive water has not been proven to help control scale. May not reduce scaling sufficiently to weekly cleaning Provisions for acid cleaning system may not be an advantage over designed permanent piped acid system from chlorine handling building. Periodic maintenance (acid cleaning) may not be done when needed and could result in excessive scale buildup and unexpected shutdowns. Temporary cleaning-type facilities may be harder to ensure optimal and safe handling practices.

5. Alternative 5 – Modify Lime Feed System to a Direct Feed (No Loop) Neat Feed System. This alternative would not require changes to the lime slaking system (assuming the grit removal project is completed) or the lime slurry pumping system other than provisions for an acid cleaning system similar to Alternative 1. The piping to the basins would need to be downsized to provide a 2-feet per second (fps) velocity in the piping. The piping would need to be flushed consistently following use. A ball valve at each basin may need to be installed to allow the piping to remain full of water and residual neat product following flushing to prevent scaling. Table 4.8 presents the advantages and disadvantages of this alternative.

Table 4.8 Advantages and Disadvantages of Lime Feed System Alternative 5 TM – On-Site Generation of Sodium Hypochlorite Evaluation City of Austin	
Advantages	**Disadvantages**
Utilize existing equipment	Unproven conveyance system
Cleaning system would not impact chloramine disinfection process or residual downstream of the upflow clarifiers	Could result in significant damage to system if operations personnel did not perform flushing consistently
No variation in disinfection residuals downstream of clarifiers due to variations in chlorine dosage	Small pipe diameters required to maintain velocity at low chemical flows, making scaling more likely
No disruption to plant production to make change	Requires acid cleaning system, similar disadvantages as noted in Table 4.4

4.6 Electrical, Instrumentation, and Control System Requirements

HEI performed the preliminary electrical evaluation and conceptual design for the OSGSH system project as outlined in the following paragraphs. A total of two process/mechanical system design alternatives were evaluated for the OSGSH system. Each of these design alternatives corresponds to the system necessary to provide treatment for different values of overall WTP flow rate. Minimal provisions for future loads have been included in the design alternatives as described in the following paragraphs.

The proposed design was based upon the proposed process/mechanical electrical loads as shown in Table 4.9.

Table 4.9 Proposed Process/Mechanical and HVAC Loads for On-Site Chlorine Generation System TM – On-Site Generation of Sodium Hypochlorite Evaluation City of Austin				
Process Equipment	**Rated Power per Unit**	**Power Units**	**Total Quantity (167 mgd)**	**Total Quantity (225 mgd)**
On-Site Chlorine Generation Process Area				
Rectifier [1]	203.7	kVA	7	9
Rectifier Control Panel [1]	24.9	kVA	7	9
Water Softener [1]	4.2	kVA	2	2
Water Chiller [1]	83.2	kVA	3	3
Blower [2]	3	HP	10	12

Table 4.9 Proposed Process/Mechanical and HVAC Loads for On-Site Chlorine Generation System TM – On-Site Generation of Sodium Hypochlorite Evaluation City of Austin				
Process Equipment	**Rated Power per Unit**	**Power Units**	**Total Quantity (167 mgd)**	**Total Quantity (225 mgd)**
Brine Pump [1]	1	HP	7	9
Metering Pump	2	HP	5	6
Combination Facility HVAC Unit	93.1	kVA	1	1

Notes:
1. One unit is considered de-energized in the following design load calculations.
2. One-half of the proposed units are considered de-energized in the following design load calculations

Key objectives of the electrical evaluation were to propose electrical design alternatives in order to support the proposed process/mechanical system design, to propose options or variations to the proposed design alternatives, and finally to present preliminary electrical and I&C construction cost opinions for each of the proposed design alternatives and options.

The first section of the electrical evaluation details the proposed electrical system to support the process/mechanical system. This is followed by a description of the design alternatives. The second section summarizes the proposed I&C system to support the process/mechanical system and its associated design alternatives.

4.6.1 Summary of Proposed Electrical System

This section summarizes the proposed electrical system. It begins with a brief overview description of the proposed system. Finally, the proposed design alternatives are described in more detail. HEI has developed the design alternatives as described below in order to support the proposed process/mechanical system design. The design alternatives provide an overall design concept for the proposed electrical improvements.

4.6.1.1 Power Distribution System – Introduction

It is proposed that industry standard products be used where possible. This will help the City in the maintenance of the system and help reduce maintenance costs by facilitating standardization among components. Standardization of equipment is one of the objectives in this design.

4.6.1.2 Power Distribution System – Electrical Analysis Concept

The analysis of the process' electrical system is divided into electrical load zones congruent with the anticipated process/mechanical system. Based on the power requirements of the packaged system rectifier loads, all loads are proposed to operate at 480 VAC.

Based on the preliminary load data shown in Table 4.9, the OSGSH process operating at the proposed overall plant flow rate (167 mgd) will require at least 1,842.6 kVA, excluding system inrush. Operating at the OSGSH process at the future plant flow rate (225 mgd) will require 2,303.9 kVA, excluding system inrush. The largest loads are the rectifier units.

In reviewing the distribution of proposed and future loads, the majority process load is proposed for the initial construction while the minority process load is designated for the future expansion. Consideration has been given in the proposed design to incorporate this observation in the sizing and selection of equipment. The application of this concept and its corresponding impacts are explained in additional detail in the subsequent paragraphs.

4.6.1.3 OSGSH System Power Distribution System – Overview

It is the team's understanding that maximum use of the existing chlorine handling building, constructed in year 2003, should be made for the proposed electrical modifications associated with this project. The power distribution system infrastructure of the existing chlorine handling building is inadequately sized to handle the proposed load of the OSGSH system. Its salvage value in relation to the proposed power distribution system needs of this project is minimal and appears limited to possible reuse of low voltage power distribution panelboards and auxiliary 208/120-Volt transformers. It is proposed to demolish the existing power distribution system infrastructure.

The OSGSH process power distribution equipment are proposed to be indoor-located inside of the existing chlorine handling building (constructed in year 2003) in an environmentally controlled room. Building modifications to the existing chlorine handling building will be needed to facilitate the expansion of the existing electrical room.

Outdoor-located, pad-mounted, oil-filled service transformers are proposed for this facility. It is noted that the proposed transformers are at the upper limit of what is commonly available for pad-mounted transformers. These transformers are anticipated to be provided with oil containment.

The proposed distribution system will include the use of distribution and lighting panels and their applicable dry-type transformers that will distribute power to all other low voltage auxiliary equipment (transformers, loads, etc.) throughout the facility. All auxiliary 208/120-Volt transformers associated with the distribution equipment, as well as their associated distribution panels, are proposed to have a standard power capacity. It is proposed to reuse existing low voltage auxiliary power distribution equipment where possible.

The standardization of the auxiliary equipment is proposed to facilitate maintenance by minimizing the amount of equipment stocked and decreasing unit costs due to bulk purchases of similar equipment.

The majority of proposed process/mechanical equipment is being provided with packaged control systems, complete with starters and integral controls.

4.6.1.3.1 Power Distribution System Design Alternative No. 1

Design Alternative No. 1 establishes a dual-feed low voltage class (480 Volts) system distribution concept for the OSGSH process (see Figure 4.6).

To support the initial process/mechanical flow rate, the use of 480-Volt low voltage distribution equipment with a bus ampacity of 4,000 amperes is proposed to distribute power to all loads while keeping selected equipment sizes within that which is commonly available from distribution equipment manufacturers. It is proposed to install the distribution equipment arranged in a secondary selective (main-tie-main) configuration. The use of power-operated circuit breakers and a single-tie circuit breaker is anticipated. Fixed mounted circuit breakers are proposed to minimize the spatial requirements associated with the distribution equipment. The use of draw-out circuit breakers can be accommodated if desired and will also lead to the need of rear accessible power distribution equipment. The use of draw-out circuit breakers will lead to a corresponding increase in spatial requirements associated with the distribution equipment.

Refer to the one-line figures for additional information. The loads will be allocated to the various buses in conjunction with the anticipated flow rate growth increment of the process.

Each rectifier is served by a dedicated circuit breaker located in the proposed 480-Volt distribution equipment. This design alternative provides a foundation upon which additional rectifier units can be added in the future at a minimal incremental construction cost. The proposed service transformers are of a standard size that will help facilitate their replacement in the event of a failure. The service transformer size selected will facilitate the installation of the future rectifier units without requiring replacement, thus minimizing future incremental construction cost and maximizing equipment salvage value and return on investment.

The distribution equipment will serve an automatic transfer switch that is dedicated to serve a 480-Volt power distribution panel. The proposed power distribution panel will feed 480-Volt to 120/208-Volt distribution and control power transformers, panelboards, and other miscellaneous loads. The use of current-limiting circuit breakers is anticipated in order to reduce the available fault current to various loads/buses as applicable.

In the event of a failure in a transformer, switchboard bus, cable, etc., only specific rectifier units served by the failed equipment would be affected and the remaining rectifier units

would be unaffected. Fifteen percent spare capacity has also been included in the size selection of distribution equipment shown on the one-line diagram.

One common plant operations methodology is the alternation of run time between equipment. The distribution equipment sizes selected under this alternative permit the spare rectifier to be energized prior to de-energizing one of the group of active rectifiers.

The anticipated process/mechanical flow rate increment will lead to varying associated electrical and I&C system incremental construction costs. These incremental construction costs reflect the application of the flow rate increment to the power distribution design concept employed. Thus, the electrical construction cost increment will be disproportionate to the process flow rate increment. This design alternative has been included in the preliminary electrical and I&C construction cost opinion.

4.6.1.3.2 Power Distribution System Design Alternative No. 1

Under this design option, additional power distribution panels are proposed in order to supply the rectifier control panels and other process/mechanical loads, thereby reducing the quantity of circuit breakers required in the proposed switchboard/switchgear. Additionally, this design option provides means to help reduce the available fault current at each load served (see Figure 4.7). To help reduce construction costs, these proposed power distribution panels will be configured as main lug only.

It is anticipated that these power distribution panels could be located in the process/mechanical room, which may be more advantageous for space management purposes in consideration of the size of the existing chlorine handling building.

4.6.1.4 Auxiliary Low Voltage Power Distribution System to Serve the Control Power Needs of the OSGSH Process

It is proposed that an UPS system serve the I&C system's uninterruptible power needs for specific instrumentation and all proposed PLCs. The proposed UPS system will also allow the ability of the I&C system to monitor critical points in the process in the event of a short power outage. It is proposed that the UPS needs of each control panel will be served by a dedicated UPS located inside of that control panel.

THIS PAGE INTENTIONALLY LEFT BLANK

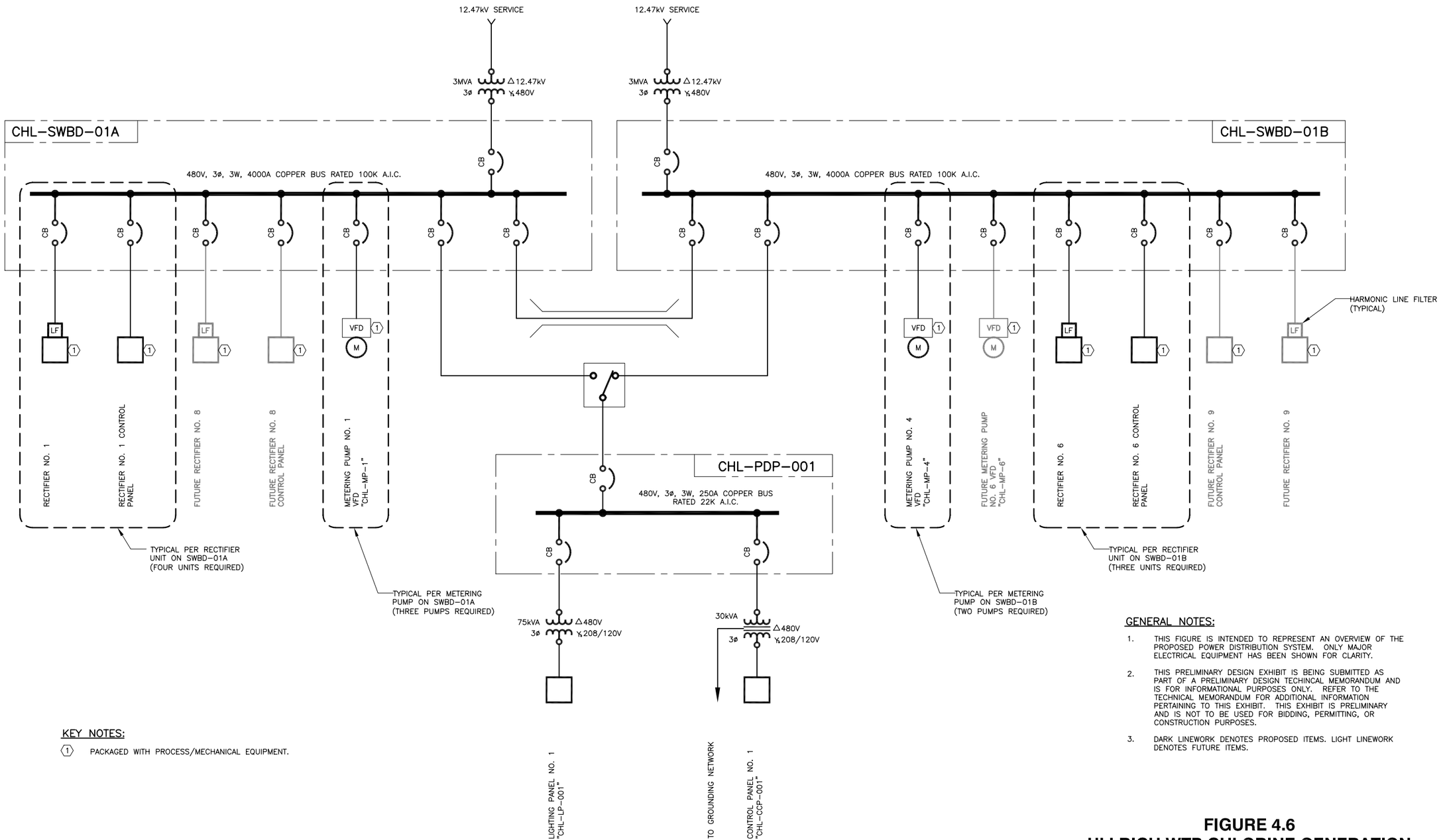

KEY NOTES:

(1) PACKAGED WITH PROCESS/MECHANICAL EQUIPMENT.

GENERAL NOTES:

1. THIS FIGURE IS INTENDED TO REPRESENT AN OVERVIEW OF THE PROPOSED POWER DISTRIBUTION SYSTEM. ONLY MAJOR ELECTRICAL EQUIPMENT HAS BEEN SHOWN FOR CLARITY.
2. THIS PRELIMINARY DESIGN EXHIBIT IS BEING SUBMITTED AS PART OF A PRELIMINARY DESIGN TECHINCAL MEMORANDUM AND IS FOR INFORMATIONAL PURPOSES ONLY. REFER TO THE TECHNICAL MEMORANDUM FOR ADDITIONAL INFORMATION PERTAINING TO THIS EXHIBIT. THIS EXHIBIT IS PRELIMINARY AND IS NOT TO BE USED FOR BIDDING, PERMITTING, OR CONSTRUCTION PURPOSES.
3. DARK LINEWORK DENOTES PROPOSED ITEMS. LIGHT LINEWORK DENOTES FUTURE ITEMS.

FIGURE 4.6
ULLRICH WTP CHLORINE GENERATION PROCESS DESIGN ALTERNATIVE NO. 1
OVERALL ONE-LINE DIAGRAM
CITY OF AUSTIN

REUSE OF DOCUMENTS
This document and the ideas and designs incorporated herein as an instrument of professional service has been developed, designed and prepared by Harutunian Engineering, Inc. and is not to be used, in whole or part, for any other project without the written authorization of the City of Austin and Harutunian Engineering, Inc. © 2007

This document is released for the purpose of interim review under the authority of K. A. HARUTUNIAN, P.E. 59181 on 12/14/2007.
It is not to be used for construction, bidding, or permit purposes.

Engineers...Working Wonders With Water™

THIS PAGE INTENTIONALLY LEFT BLANK

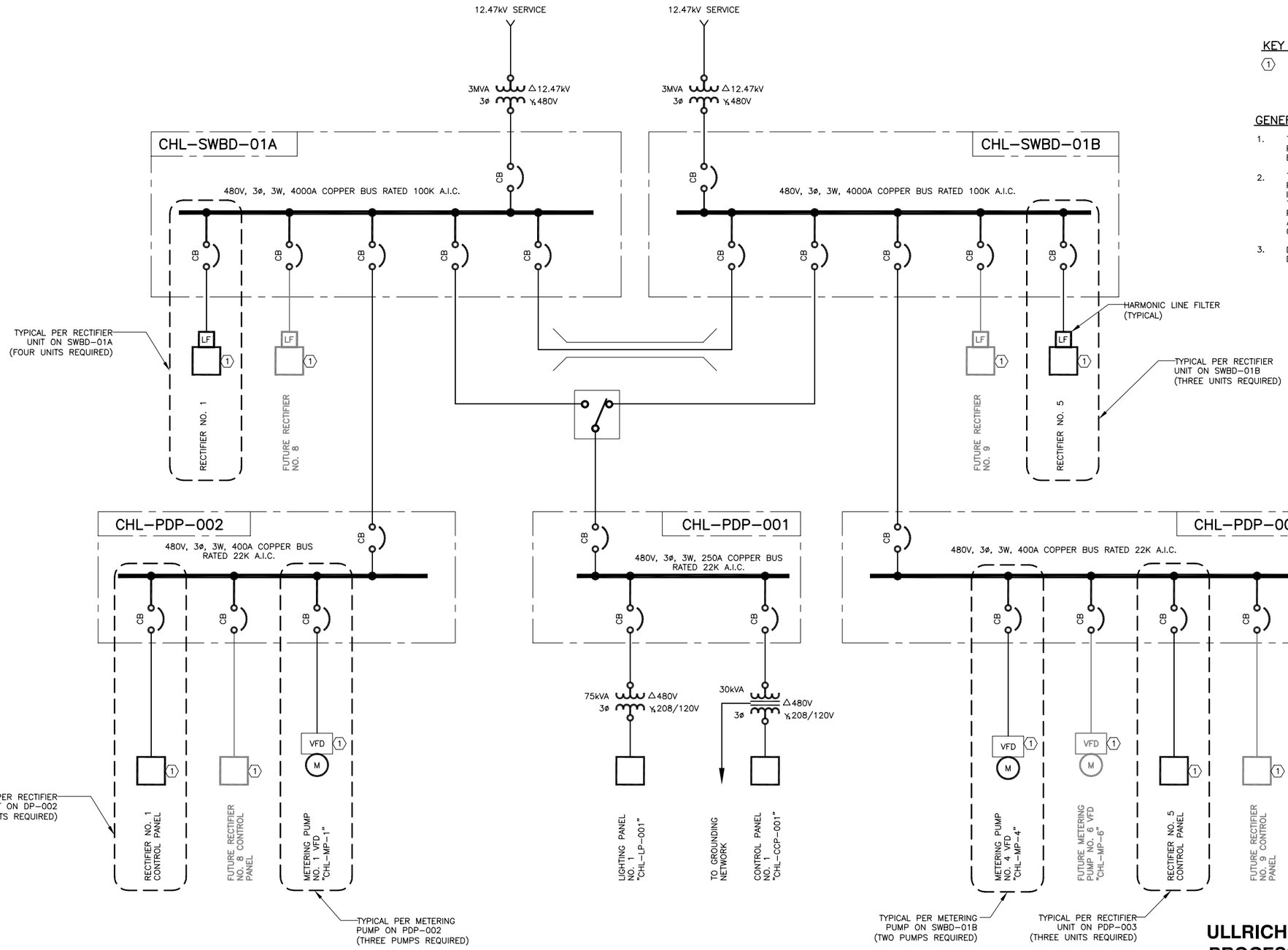

KEY NOTES:

(1) PACKAGED WITH PROCESS/MECHANICAL EQUIPMENT.

GENERAL NOTES:

1. THIS FIGURE IS INTENDED TO REPRESENT AN OVERVIEW OF THE PROPOSED POWER DISTRIBUTION SYSTEM. ONLY MAJOR ELECTRICAL EQUIPMENT HAS BEEN SHOWN FOR CLARITY.
2. THIS PRELIMINARY DESIGN EXHIBIT IS BEING SUBMITTED AS PART OF A PRELIMINARY DESIGN TECHINCAL MEMORANDUM AND IS FOR INFORMATIONAL PURPOSES ONLY. REFER TO THE TECHNICAL MEMORANDUM FOR ADDITIONAL INFORMATION PERTAINING TO THIS EXHIBIT. THIS EXHIBIT IS PRELIMINARY AND IS NOT TO BE USED FOR BIDDING, PERMITTING, OR CONSTRUCTION PURPOSES.
3. DARK LINEWORK DENOTES PROPOSED ITEMS. LIGHT LINEWORK DENOTES FUTURE ITEMS.

FIGURE 4.7
ULLRICH WTP CHLORINE GENERATION PROCESS DESIGN ALTERNATIVE NO. 2
OVERALL ONE-LINE DIAGRAM
CITY OF AUSTIN

REUSE OF DOCUMENTS
This document and the ideas and designs incorporated herein as an instrument of professional service has been developed, designed and prepared by Harutunian Engineering, Inc. and is not to be used, in whole or part, for any other project without the written authorization of the City of Austin and Harutunian Engineering, Inc. © 2007

This document is released for the purpose of interim review under the authority of K. A. HARUTUNIAN, P.E. 59181 on 12/14/2007.
It is not to be used for construction, bidding, or permit purposes.

Engineers...Working Wonders With Water™

THIS PAGE INTENTIONALLY LEFT BLANK

4.6.1.5 Power Quality Issues

4.6.1.5.1 Power Factor Considerations

All process equipment, ventilation equipment, and air-handling unit motors will be specified as high power factor motors where possible. Such motors shall be specified to minimize overall energy costs yielding a minimum power factor of 90 percent lagging, prior to the addition of any power factor correction, where possible. When it is not possible for the motors to be designated with a high power factor, the highest possible power factor motors will be employed.

As all process/mechanical and HVAC equipment are being provided with packaged controls, the inclusion of power factor correction capacitors into the proposed power distribution system equipment is not anticipated. It is anticipated that packaged process/mechanical equipment of 3 Horsepower and greater will be provided with power factor correction capacitors internal to the packaged equipment so that the overall process/mechanical equipment package maintains a power factor of 95 percent lagging or better. The operational nature of the process application will be taken into consideration when applying power factor correction.

4.6.1.5.2 Proposed Motor and Power Distribution Equipment Efficiency

To minimize overall energy costs, all process equipment, ventilation equipment, and air handling unit motors and distribution transformers will be specified as high efficiency where possible. When it is not possible or economically practical for such equipment to be high efficiency, the highest efficiency equipment possible or economically practical will be employed.

4.6.1.5.3 Rectifier Harmonic Filtering

It is proposed that each rectifier will have a dedicated harmonic filter to meet the requirements of IEEE Standard 519.

4.6.1.6 Power Metering and Protection Issues

Microprocessor-based power monitoring equipment is proposed to be installed at the incoming power source (line side) in the low voltage switchgear/switchboard, as applicable. The equipment is proposed to be a programmable device that measures and displays the following characteristics of incoming power:

- Voltage per phase
- Current per phase
- Power factor

- Frequency
- Active power
- Apparent power
- Reactive power

Each power-monitoring/protection unit is proposed to have standard control interface ports, including RS-232C and RS-485 serial communication ports for peripheral programming and data transfer via the Modbus communication protocol over a Modbus communication network. This network is proposed to interface with the respective PLCs. The above discussed values monitored by the power-monitoring units and motor protection relays will be telemetered to the top-end system by the PLC. Each unit will also have a digital display of measured/telemetered parameters for local display.

4.6.1.7 Miscellaneous Electrical Subsystems

4.6.1.7.1 Indoor Lighting

Limited modifications to the existing lighting of the chlorine handling building are anticipated. These modifications are anticipated to be limited to that needed to facilitate the necessary building modifications. Fixtures and their associated switching design concepts will be implemented as required to match the existing design concepts presently employed at the existing chlorine handling building. Maximum reuse of existing fixtures is anticipated.

4.6.1.7.2 Outdoor Lighting

Additional exterior perimeter lighting will be provided as needed around the exterior of the existing chlorine handling building to facilitate entry/exit through the building and personnel access around the storage tanks. The proposed fixtures and their application will be selected to match the existing lighting fixtures. Additional outdoor task, perimeter, walkway, parking lot, landscape, etc., types of lighting are not anticipated.

Additional preliminary electrical and I&C construction cost opinion would be required in order to implement additional special lighting that may be required for any type of security system.

4.6.1.7.3 Convenience and Special-Purpose Maintenance Receptacles

Maximum reuse of existing convenience and special-purpose receptacles is anticipated. Should additional receptacles be required, they will be selected to match those presently in use at the existing chlorine handling building in application and type.

4.6.1.7.4 Raceway System

The electrical wiring raceways will consist of a conduit system. Conduit routing methodology will be aboveground and exposed and/or underground in a duct bank system.

It is anticipated that raceways will be primarily routed in an exposed configuration for the modifications to the existing chlorine handling building. Raceways in process/mechanical rooms shall be corrosion resistant and shall be made of Schedule No. 80 PVC per NEC requirements. Conduit bodies and systems concealed below slab or buried underground shall be corrosion resistant and shall be made of Schedule No. 40 PVC per NEC requirements. In recognition of the facility life cycle, it is proposed to encase such conduit systems in a reinforced concrete-encased duct bank.

Conduits shall not be filled greater than the 40-percent maximum fill percentage as allowed by the NEC. Pull boxes located outdoors and in process/mechanical rooms will be constructed of 316 SS, while boxes located in the electrical room will be painted steel in order to reduce construction costs.

It is proposed that where possible, conduit stub-outs for future equipment will be made as practicable to facilitate the connection of future equipment.

4.6.1.7.5 Electrical, Instrumentation, and Control Wiring

All 600-Volt power wiring will be copper with 600-Volt insulation when serving equipment rated 600 Volts and below. All 600-Volt I&C system wiring will be copper. It is proposed to maintain separation between the power/control and instrumentation wiring to facilitate safety and maintenance of the process equipment during operation.

It is proposed to utilize 600-Volt-rated single conductor control/power cable all equipment. Fiber optic cable will be used where shown on the preliminary conceptual communications network figures for process area network communication.

For the non-fiber optic-based I&C wiring systems, it is proposed that the physical routing of the conduit/duct bank systems associated with the instrumentation and control systems be segregated from those of the power distribution system.

4.6.1.7.6 Grounding System

A single-point grounding network exists underneath the existing chlorine handling building. Minimal modifications to the existing single-point grounding network are anticipated in order to facilitate the interconnection of the proposed power distribution system to the existing grounding network.

4.6.1.7.7 Lightning Protection System

Provision for a lightning protection system is presently not included in the electrical, instrumentation, or control system design or corresponding preliminary construction cost opinion. Should the team elect to include provisions for this system, input is needed to define the composition of the system and the necessary provisions that need to be included.

4.6.2 Summary of Proposed I&C System

This section summarizes the proposed I&C system. It begins with a brief overview description of the proposed system. Finally, proposed design alternatives are described in further detail. HEI has developed the design alternatives as described below in order to support the proposed process/mechanical system design. The design alternatives provide an overall design concept for the proposed I&C system improvements.

4.6.2.1 Proposed I&C System Overview

A Distributed Control System (DCS) with an overall Programmable Logic Controller (PLC) for the entire process is proposed for this project. It is the team's understanding that the use of the OSGSH system manufacturer's standard packaged control system is desired for this project. It is observed that certain additional process/mechanical equipment (chlorine metering pumps, etc.) located in the process are required to be monitored and controlled that are not part of the packaged OSGSH system.

It is proposed to locate each PLC and most I&C equipment (except field control stations and field instruments) inside a centralized control panel located indoors in an air conditioned environment. Should a control panel be located in a non-air conditioned environment, it is proposed to install packaged air conditioning unit(s) mounted to the control panel in order to maintain the design temperature parameters of the electronic equipment contained inside the control panel.

It is proposed that, depending on the application, most individual process equipment would have means to provide the operator the ability to engage or disengage the equipment from operation. Each Field Control Station (FCS), would be located near the equipment and generally would only be used should a particular PLC become nonfunctional or during maintenance activities for that process equipment. Operation at the FCS level of control will not include automatic coordination with the rest of the process and will require the operator's complete attention in order to operate the process. The proposed FCSs are described further in the following paragraphs.

It is anticipated that minimal additional primary sensing elements beyond those necessary for monitoring and controlling the packaged control system will be required. This additional instrumentation will be limited to flow measurement of each chlorine metering pump discharge. This variable will be made available at the field (at instrument level on the field

instrument), at an OIU, and at the top-end computer. The OIU provides a graphical presentation of the process with a touch-screen interface.

The following paragraphs describe specific features of the I&C system design concepts for this project.

4.6.2.2 I&C System Design Alternative

Figure 4.8 shows a conceptual control system architecture design alternative for the OSGSH system for the Ullrich WTP. It is anticipated that the communication network associated with the OSGSH system will be a dual-channel single-mode Ethernet fiber optic network between the top-end computer system and the OSGSH system process area. It is proposed that the overall process area PLC will communicate with the top-end system using Ethernet. It is proposed that a second dual-channel Ethernet network will be established between the overall process area PLC and the packaged equipment PLC system(s).

As also shown on Figure 4.8, it is anticipated that a main control panel will be provided for the overall process area. This proposed main control panel will contain the proposed overall process area PLC and also house all of the I&C equipment dedicated to that particular process area and requiring custom design. The main control panel PLC will monitor and control non-packaged process/mechanical equipment, such as the chlorine metering pumps for the process area, as well as facilitate communication between the top-end system and packaged equipment PLC system(s). It is anticipated that the existing facility main control panel will be reused to the extent possible and expanded as necessary to serve the needs of this project. This will help to maximize equipment salvage value and return on investment.

Additionally, a master control panel is anticipated for the OSGSH system to coordinate the activities and monitoring associated within the packaged OSGSH system. It is anticipated that this control panel will be provided by the OSGSH system manufacturer as part of their standard product offering. It is anticipated that this panel will also monitor and control the combined blowers and chlorine solution storage portion of the process. Additional dedicated rectifier control panels are anticipated for each rectifier unit. These control panels are anticipated to be the standard product offering of the OSGSH system manufacturer.

THIS PAGE INTENTIONALLY LEFT BLANK

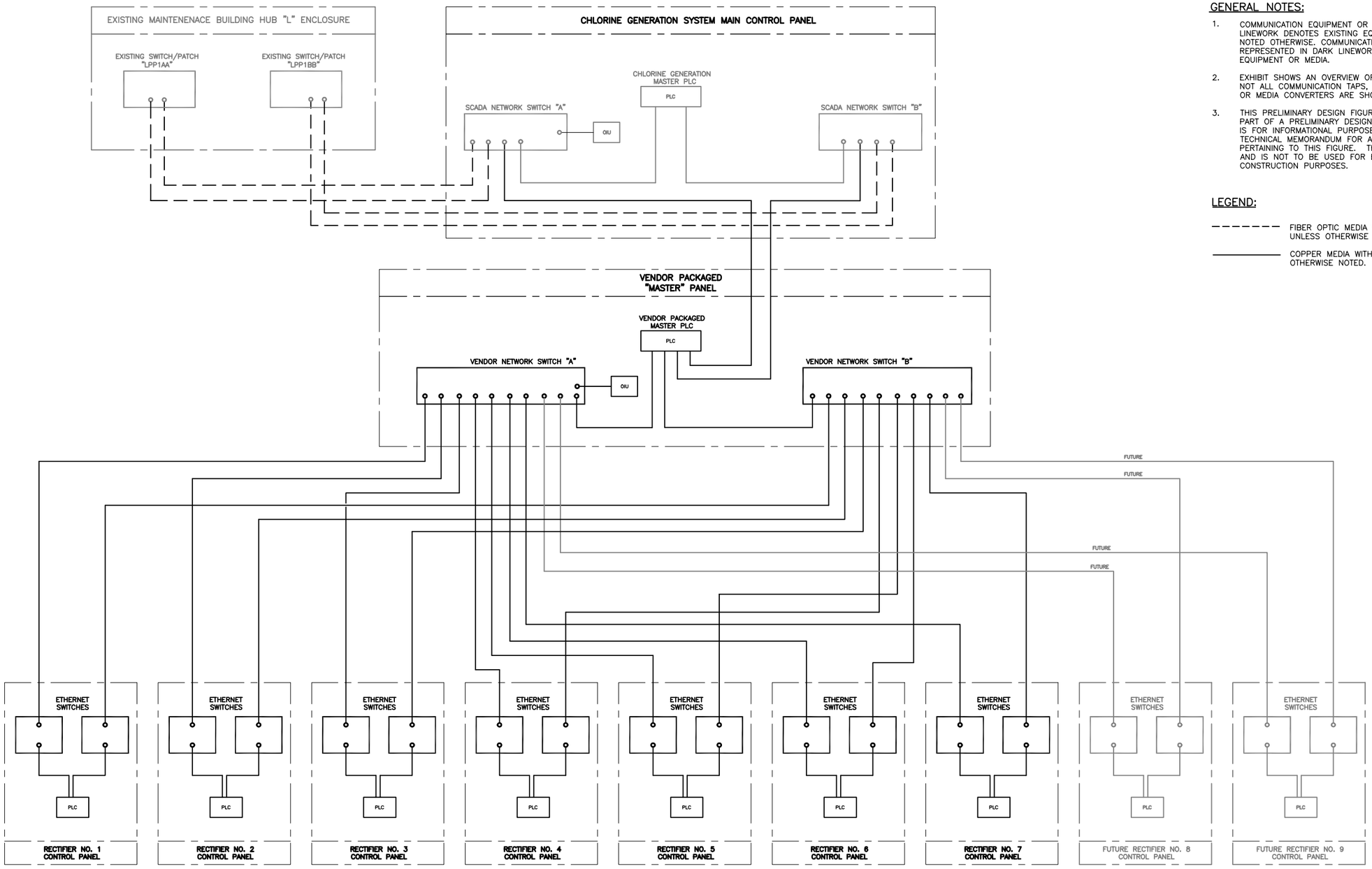

GENERAL NOTES:

1. COMMUNICATION EQUIPMENT OR MEDIA REPRESENTED IN LIGHT LINEWORK DENOTES EXISTING EQUIPMENT OR MEDIA UNLESS NOTED OTHERWISE. COMMUNICATION EQUIPMENT OR MEDIA REPRESENTED IN DARK LINEWORK DENOTES PROPOSED EQUIPMENT OR MEDIA.
2. EXHIBIT SHOWS AN OVERVIEW OF THE PROPOSED NETWORK. NOT ALL COMMUNICATION TAPS, TERMINATORS, PATCH PANELS, OR MEDIA CONVERTERS ARE SHOWN.
3. THIS PRELIMINARY DESIGN FIGURE IS BEING SUBMITTED AS PART OF A PRELIMINARY DESIGN TECHINCAL MEMORANDUM AND IS FOR INFORMATIONAL PURPOSES ONLY. REFER TO THE TECHNICAL MEMORANDUM FOR ADDITIONAL INFORMATION PERTAINING TO THIS FIGURE. THIS FIGURE IS PRELIMINARY AND IS NOT TO BE USED FOR BIDDING, PERMITTING, OR CONSTRUCTION PURPOSES.

LEGEND:

- - - - - - - FIBER OPTIC MEDIA WITH ETHERNET PROTOCOL, UNLESS OTHERWISE NOTED.

——————— COPPER MEDIA WITH ETHERNET PROTOCOL, UNLESS OTHERWISE NOTED.

Figure No. 4.8
ULLRICH WTP ON-SITE CHLORINE GENERATION PROCESS CONCEPTUAL CONTROL SYSTEM ARCHITECTURE DESIGN ALTERNATIVE NO. 1
CITY OF AUSTIN

REUSE OF DOCUMENTS
This document and the ideas and designs incorporated herein as an instrument of professional service has been developed, designed and prepared by Harutunian Engineering, Inc. and is not to be used, in whole or part, for any other project without the written authorization of the City of Austin and Harutunian Engineering, Inc. © 2007

This document is released for the purpose of interim review under the authority of K. A. HARUTUNIAN, P.E. 59181 on 12/14/2007.
It is not to be used for construction, bidding, or permit purposes.

Engineers...Working Wonders With Water™

THIS PAGE INTENTIONALLY LEFT BLANK

An OIU is proposed for the overall process area and is proposed to be located on the main control panel. An OIU is also anticipated for the OSGSH system master control panel. Additional OIUs can be provided for additional control panels of the OSGSH system if deemed necessary.

As shown on Figure 4.8, all network communication cabling between the process PLC and the top-end system shall be single-mode fiber optic cable. The proposed fiber optic network will interconnect with the existing maintenance building Hub “L.” During subsequent phases of the project, the existing fiber optic cable length can be investigated for possible reuse for this project. All network communication cabling between controllers and their respective OIUs and power-monitoring/protection units shall be copper conductors. A dual-channel Ethernet media is recommended for reliability and ease of maintenance; however, a single-channel network may be implemented as a cost savings measure.

It is observed that in the event a single-channel network interconnection between the process area and the top-end is selected for implementation, the failure of the single-channel network communications system would affect plant operations. This failure could render the entire process area isolated from other treatment plant process areas with no data transfer between them. A failure of this type would have no affect on plant treatment capacity. This is due to the fact that each PLC in each process area would be able to monitor and control that area’s associated mechanical processes. Each process area would require manual intervention at the OIU, main control panel, or individual process control panels to assure proper application of setpoints and manual coordination with other process areas that would normally have been transferred via the network communications system. However, all of the process equipment would be operational.

4.6.2.3 I&C Equipment Selection

Specific equipment selections for the implementation of the control and monitoring system have been recommended below in Table 4.10.

Table 4.10 Proposed Type of Various Instrumentation and Control System Equipment
TM – On-Site Generation of Sodium Hypochlorite Evaluation
City of Austin

Proposed Equipment	Type of Equipment
Hydrogen, pH, Chlorine Residual Indicating Transmitter	Please refer to the process/mechanical TM for additional information regarding the process analytical instruments. It is anticipated that all process analytical instruments will consist of an indicating transmitter with a 4-20mA output signal.
Flow Indicating Transmitter	Please refer to the process/mechanical technical memorandum for additional information regarding the process flow instruments. It is anticipated that all process flow instruments will consist of an indicating transmitter with a 4-20mA output signal.
Control Relays	NEMA design (compact, Din mounted), industrial type with eight total field interchangeable contacts
Terminal Blocks	Normal density type, capable of 37 terminals per foot
Field Control Stations Selector Switches, Pilot Lights, Pushbuttons	NEMA 4X, 30 millimeters. Number of positions of selector switch depends on application and equipment. Color of pilot lights depends on application
24 VDC Power Supply	Redundant, isolated, and filtered power supplies
UPS	120-VAC input and output power
OIU	Magelis, with 10-in display, as manufactured by Schneider Automation, Inc.
PLC	Modicon Quantum, as manufactured by Schneider Automation, Inc. Different central processing units may be used for different process areas depending on the process application. The selection of central processing units will be made to optimize return on investment and maximize cost effectiveness.

4.6.2.4 Parameters/Functions Monitored by Plant DCS System

The DCS will monitor the ON/OFF and failure status of all equipment, process information, instruments, and field selector switch position status, as applicable. Recommended DCS monitoring points for specific equipment have been identified in Table 4.11, but should be finalized via an I&C workshop during the design.

Table 4.11 Proposed Distributed Control System Design
TM – On-Site Generation of Sodium Hypochlorite Evaluation
City of Austin

Process Equipment	Recommended DCS Monitoring Points per Unit
OSGSH	
Metering Pump	• Pump Discharge Flow • Pump Speed • Pump Run Status • Pump Common Alarm
Combination Facility HVAC Unit	None

It is anticipated that all points associated with the packaged OSGSH system will be telemetered using a serial data network communication link.

4.6.2.5 Field Control Station

The FCS provides local ON/OFF control of all process equipment with associated ON/OFF indication, if required. As shown in Table 4.12, local controls may include a HAND/OFF/DCS selector switch for selection of control location or an ON/OFF selector switch. Local control allows the equipment to be operated locally at the equipment's location. The OFF position will disable operation of the equipment from either the DCS or local controls. The DCS position allows the equipment to be operated through the DCS. The FCS design, including components for specific equipment, has been identified in Table 4.12, but should be finalized during an I&C workshop held during the design phase. All FCS enclosures will be NEMA 4X, 316 SS.

Table 4.12 Proposed Field Control Station Design TM – On-Site Generation of Sodium Hypochlorite Evaluation City of Austin		
Process Equipment	**Proposed Number of FCS per Equipment**	**FCS Features**
OSGSH		
Metering Pump	1	• LOCAL/OFF/DCS Selector Switch • START Pushbutton • STOP Pushbutton • Speed adjustment potentiometer • Pump PERCENT SPEED indication • Pump ON indicating light • Pump OFF indicating light

4.6.2.6 Packaged Control Systems

Various types of both custom and packaged control systems are proposed for this project. The major characteristics of each of these systems are described below along with an identifying letter for classification purposes.

4.6.2.6.1 Type B

Type B is a packaged control system. The starters and controls will be furnished in the packaged control panel by the manufacturer of the equipment and would require power from an external source (MCC, panelboard, etc.). In this type of packaged system, the control panel and also equipment sub-components would be provided by the manufacturer loose and assembled on site by the installation contractor. It follows that the packaged control panel would require mounting details and a conduit/wiring design between the packaged control panel and the proposed equipment sub-components. Should remote monitoring/control of the equipment be required, then additional conduit/wiring would be necessary between the packaged control panel and the DCS.

4.6.2.6.2 Type C

Type C is a packaged control system. The starter and controls will be furnished in the packaged control panel by the manufacturer of the equipment, mounted on a skid/frame, and pre-wired to the equipment shipped by the manufacturer. Under this type of packaged control system, the packaged control panel would require power from an external source (MCC, panelboard, etc.). Should remote monitoring/control of the equipment be required, additional conduit/wiring would be necessary between the packaged control panel and the DCS.

4.6.2.6.3 Type H

Type H is a non-packaged control system custom designed specifically for the process application as it pertains to this project. The starters associated with the process equipment will be provided with the process equipment. The associated controls will be located in a centralized cabinet (control panel, etc.) as described elsewhere in this TM. A minimal hardwired control relay logic system shall be provided to facilitate critical hydraulic functions, personnel safety/ protection, and machine protection. The PLC shall be employed for control/monitoring functions and also to facilitate remote control/monitoring. In the event of PLC failure, operation of the process equipment will be limited to the provisions described elsewhere in this report. It follows that mounting details and conduit/wiring design between all equipment is required for this type of system.

4.6.2.6.4 Packaged Control System Types for each Major Process Equipment

The packaged control system types for specific equipment have been identified in Table 4.13; however, as previously mentioned, an I&C workshop should be held during the design phase to finalize control strategy.

Table 4.13 Proposed Type of Control System for each Major Process Equipment/System
TM – On-Site Generation of Sodium Hypochlorite Evaluation
City of Austin

Process Equipment/System	Control System Type
OSGSH	
Rectifier	C
Rectifier Control Panel	C
Water Softener	B
Water Chiller	B
Blower	B
Brine Pump	C
Metering Pump	H
Combination Facility HVAC Unit	B

4.6.2.7 Miscellaneous I&C Systems

Provisions for security and fire protection systems are presently not included in the electrical, instrumentation, or control system design or corresponding preliminary construction cost opinion. Should the team elect to include provisions for these systems, input is needed to define the composition of the system and the necessary provisions that need to be included.

5.0 ESTIMATED COST AND SCHEDULE

5.1 Construction Costs

Budgetary estimates of the construction costs were developed for replacing the existing chlorine systems with an OSGSH system at the Ullrich WTP. These costs are based on the layouts and preliminary design information presented in earlier sections. The following list identifies the cost elements included in the estimates along with the primary assumptions made to develop the estimated costs:

- Construction Costs. The cost of construction summarizes the contractor's full project fees, including labor, materials, mobilization/demobilization, bonds/insurance, taxes, testing/start-up, overhead, and profit. Construction costs were developed from other projects of similar scope and complexity and then adjusted to account for the location and base year of this project (2011). A 15-percent factor was used for the general contractor overhead, profit, and risk.

- Contingency. A contingency of 25 percent was assumed. This accounts for unforeseeable elements of cost within the defined project scope as well as known elements that are undefined at this stage of progress. Items such as variations in project configuration developed during the detailed design phase, unforeseen site conditions encountered during construction, and reasonable project changes during construction are included in the contingency.

The level of accuracy for construction cost estimates varies depending upon the level of detail to which the project has been defined. Feasibility studies, master plans, and conceptual designs represent the lowest level of accuracy, while pre-bid estimates (based on detailed plans and specifications) represent the highest accuracy level. The American Association of Cost Engineers (AACE) International publishes guidelines that define the class of estimate and the expected accuracy range. Based on these guidelines, the construction cost estimate presented herein is a Class 5 estimate, which should be considered a conceptual or order-of-magnitude estimate. The expected range of accuracy for this type of estimate is +50 percent to –30 percent of the actual project cost. Table 5.1 summarizes the estimated construction costs.

Table 5.1	Opinion of Probable Construction Costs [1] TM – On-Site Generation of Sodium Hypochlorite Evaluation City of Austin	
Sl. No.	**Phase**	**OSGSH System Estimated Costs at Ullrich WTP**
1	General Conditions	$410,000
2	Removals / Demolition	$80,000
3	Site Work	$40,000
4	Yard Piping	$75,000
5	Onsite Sodium Hypochlorite Generation	$4,110,000
6	NaOCl Storage Tank Foundation and Other	$165,000
7	Building, Modifications, and Additions	$420,000
8	Retrofit Existing Tank	$40,000
9	Removal of Sodium Hydroxide	$655,000
10	Lime Feed System Modifications - Allowance	$325,000
11	Temporary Chlorine Feed System	$130,000
12	Existing Chlorine System Removal	N/A
13	Electrical (25%)	$1,520,000
14	Instrumentation and Controls (10%)	$610,000
	Estimated Subtotal Cost	$8,580,000
	General Contractor Overhead, Profit & Risk (15%)	$1,285,000
	Subtotal	$9,865,000
	Contingency (25%)	$2,465,000
TOTAL		**$12,330,000**

Notes:
1. Estimated cost of construction only in August 2011 dollars.

5.2 Construction Schedule

Several factors will affect the schedule to replace the existing chlorine system with an OSGSH system. These include mobilization, the submittal preparation, submittal review, delivery of the OSGSH equipment, and OSGSH equipment installation, startup, and testing. The estimated time for submittal preparation is about 8 weeks. Additional time will be required for submittal reviews. The estimated time from submittal approval to OSGSH equipment delivery is 16 to 20 weeks. Actual equipment installation will take approximately 6 to 8 weeks. Other activities, such as demolition and new construction, will vary between projects, and will add additional time to the schedule.

Major activities that specifically impact the Ullrich schedule are implementing the temporary disinfection system, adding a cleaning system for the lime solution lines, retrofitting the existing tank, replacing chlorine delivery lines, and building the NaOCl storage tank foundation. Constructing a new building will not be required and will not be a factor.

At Ullrich, setting up a temporary disinfection system would also extend the schedule. Activities that can impact setting up a temporary disinfection system are ordering a new NaOCl storage tank (presently a long lead time) and submittal review and approval. For preliminary planning purposes, an 18-month construction schedule should be assumed. A large variable affecting the schedule is the implementation of the temporary system, which could add several months to the schedule.

6.0 CONCLUSIONS AND RECOMMENDATIONS

6.1 Ullrich WTP Conclusions and Recommendations

The chlorine facility at Ullrich has adequate space to accommodate an OSGSH system; however, several significant modifications and additions would be required. Besides the demolition of the existing bulk chlorine system, a substantial foundation with a building extension would be required to accommodate several sodium hypochlorite solution storage tanks. The tank foundation would occupy adjacent space northeast of the building and require replacement and rerouting of several chlorine distribution lines.

Providing adequate space and optimizing the location for the brine tank(s) is an important consideration. Using an existing 80,000-gallon scrubber tank was studied. Converting this tank to a brine tank offers the advantage of utilizing an awkward space and frees up the existing loading area. Salt deliveries can be conducted within the existing loading area, which helps minimize noise from salt loading. The alternative would be to use the existing loading area to install several smaller brine/salt storage tanks.

Currently, the plant chlorine solution is slightly acidic and is used to clean piping at the lime slurry delivery system. The sodium hypochlorite is basic; therefore, it cannot be used to clean the lines. It is recommended that an NSF-approved muriatic acid cleaning system be used since it will be simple, effective, and easy to implement compared to other options.

6.2 OSGSH Recommendations

The main advantage that an OSGSH system offers over the existing chlorine gas systems is safety and eliminating the risk associated with an accidental chlorine gas release. The main disadvantage of implanting an OSGSH system is the high capital costs and the significant power costs. Assuming the additional capital cost of constructing and operating an OSGSH system is within the City's budget, this alternative is recommended for the following reasons:

- The City has a long and safe history of using chlorine gas at the Ullrich WTP. Therefore, the probability of accidental release on site would be low. However, potential off-site releases during transport and delivery are outside the City's control and any uncontained release could potentially lead to severe consequences. In contrast, no hazardous chemicals are used with an OSGSH system, which significantly reduces this risk.
- The public concern over the use of an OSGSH system is likely less than the other alternatives.
- Deliveries of hazardous chlorine to the site would be replaced by salt deliveries, which are non-hazardous to humans.
- The availability and price of salt are not as volatile as bulk sodium hypochlorite or chlorine gas. Additionally, salt deliveries are not subject to potential price increases that could affect chlorine costs if proposed legislation to shift carrier liability is ever passed.
- This alternative provides the lowest potential risk to the surrounding environment from a catastrophic leak.
- An RMP is not required for a disinfection system when using an OSGSH system.
- OSGSH is a proven, reliable, and effective technology for providing disinfection at WTPs.