ULTIMATE
STRENGTH

40,000 LBS. PER INSULATOR ATTACHMENT HOLE

YOKE PLATE TEE

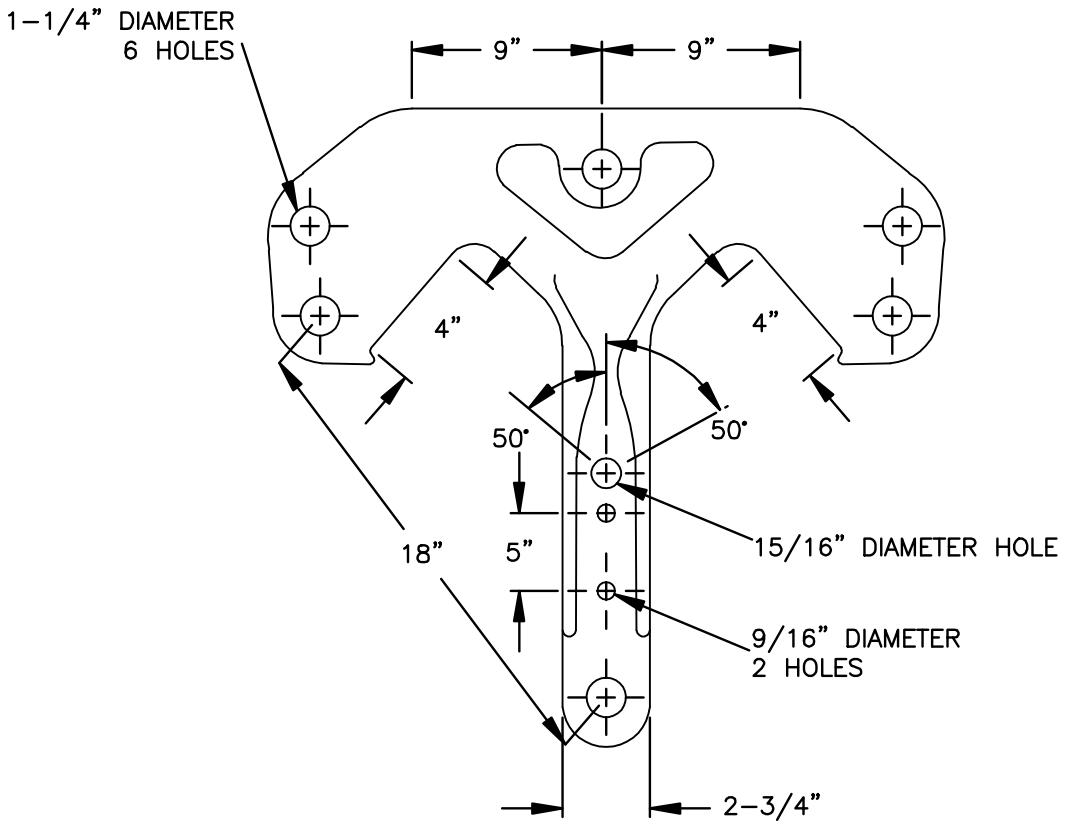

345 KV APPLICATION.
MATERIAL: GALVANIZED.

AUSTIN ENERGY POWER DELIVERY	TITLE: YOKE PLATE TEE CONFIGURATION	DRAWN: MLG	SCALE N.T.S.
		CHECKED: PGS	FILENAME: YPT-10
		DATE: 07/12/12	DRAWING NO.: YPT-10