ULTIMATE STRENGTH LBS.	DIMENSIONS INCHES					
	L	B	W	D	S DIA	PD
30,000	10	5–7/8	1	1–5/8	7/8	5/8

LINE CLEVIS CLEVIS

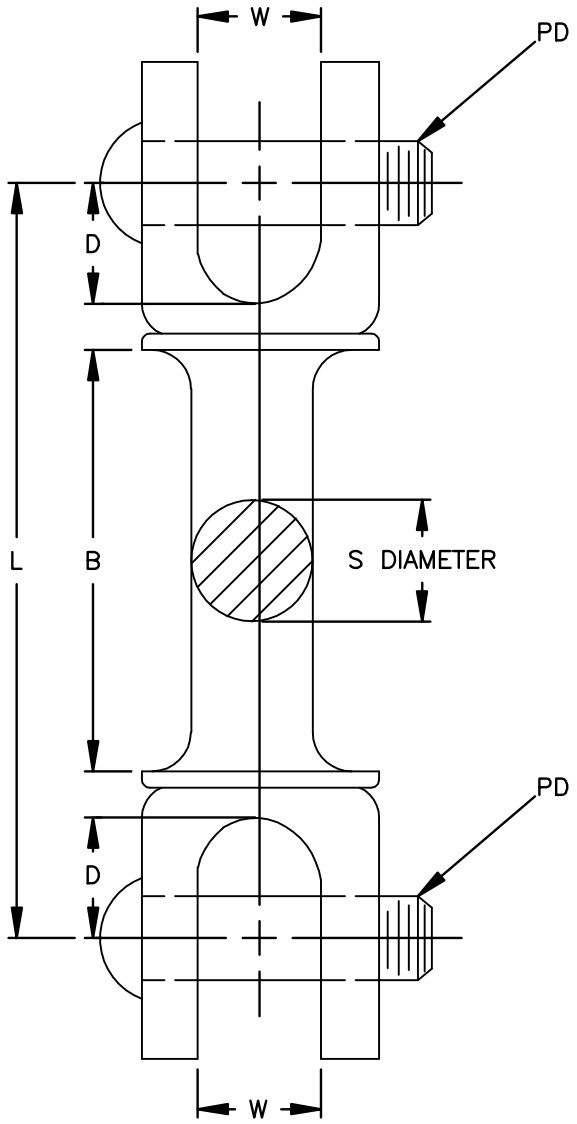

345 KV APPLICATION.
SUPPLY WITH SHIELD NUTS, WHERE APPLICABLE.
MATERIAL: GALVANIZED.

AUSTIN ENERGY
POWER DELIVERY

TITLE: LINE CLEVIS CLEVIS	DRAWN: MLG	SCALE N.T.S.
	CHECKED: PGS	FILENAME: LCC–7
	DATE: 07/11/12	DRAWING NO.: LCC–7