DIAMETER IN.	ULTIMATE STRENGTH LBS.
5/8	30,000

TURNBUCKLE

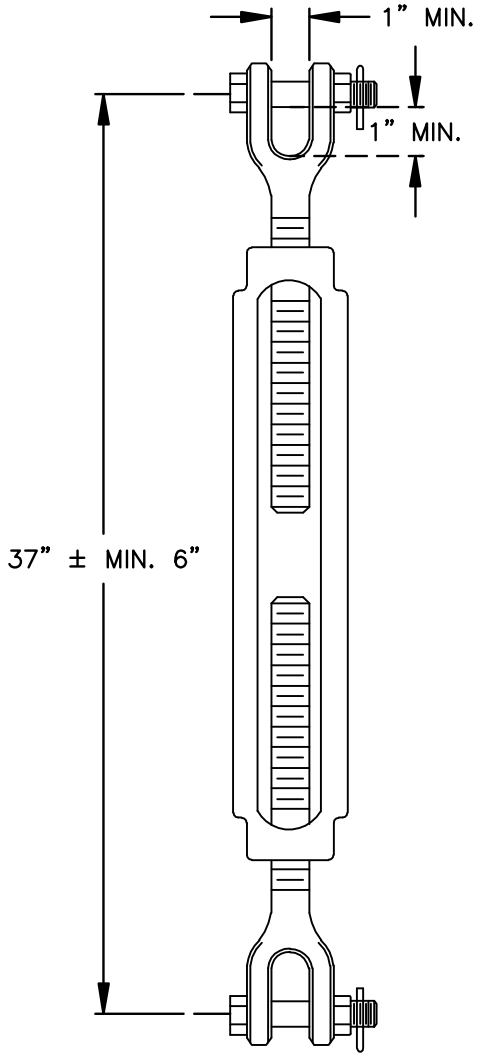

MATERIAL: GALVANIZED WITH STAINLESS STEEL COTTER PINS.
JAM NUTS REQUIRED.
345 KV APPLICATION. SUPPLY WITH SHIELD NUTS, WHERE APPLICABLE.

AUSTIN ENERGY POWER DELIVERY	TITLE: TURNBUCKLE	DRAWN: MLG	SCALE N.T.S.
		CHECKED: PGS	FILENAME: TBK-8
		DATE: 07/13/12	DRAWING NO.: TBK-8