| GENERAL DIMENSIONS INCHES | ULTIMATE STRENGTH (LBS) |
|---|---|
| | 30,000 |

# YOKE PLATE ANGLE

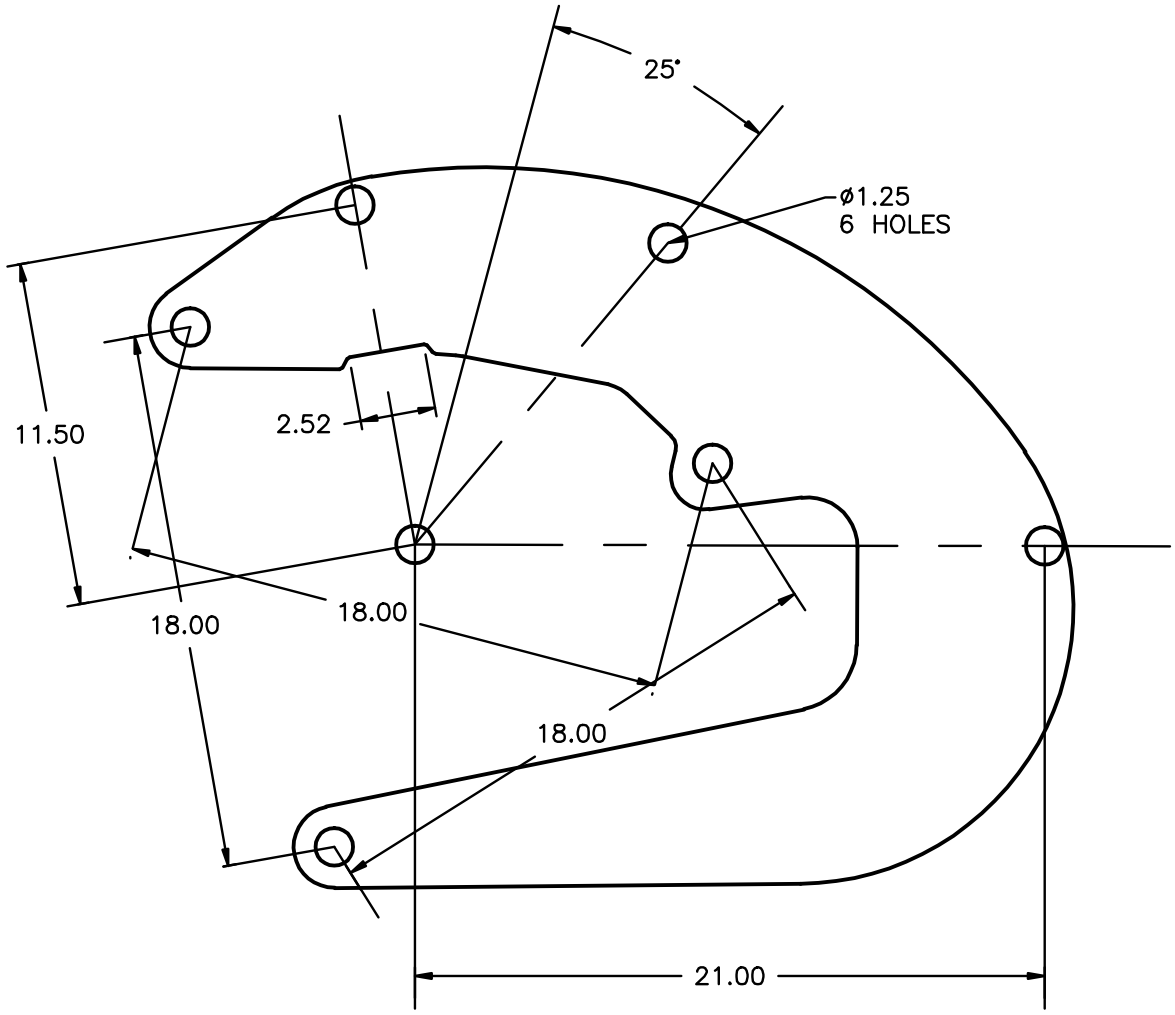


MATERIAL: GALVANIZED
345 KV APPLICATION

| | | | | |
|---|---|---|---|---|
| AUSTIN ENERGY POWER DELIVERY | TITLE: YOKE PLATE ANGLE | DRAWN: JG/MLG | SCALE N.T.S. | |
| | | CHECKED: PGS | FILENAME: VSC-11 | |
| | | DATE: 07/13/12 | DRAWING NO.: VSC-11 | |